CKD

Discontinue

BBS series can expand the possibility with its compact body!

Electric slider KBB Series

KBB SERIES

CKD Corporation

CC-783A 4

Discontinue

KBB SERIES

"KBA series" with a wide range of uses is now available as "KBB series".
Various lineups from single axis to orthogonal axes (2 to 4 axes) are prepared.
The operation method and the external dimensions are the same as a previous product. This high performance "KBB series" will sure to respond your expectations.

* KBB-05, KBB-07 excluded.

Short cycle time

<Maximum speed>

- Driven by ball screw: 1,200 mm/s (previous product: 1,000 mm/s)
- Driven by timing belt: 2,000 mm/s

High accuracy

<Positioning repeatability>

- Driven by ball screw: ±0.01 mm (previous product: ±0.02 mm)
- Driven by timing belt: ±0.05 mm

Absolute specifications for all types

Absolute encoders not requiring home position return are used in all types.

- To back up the encoder, long life lithium battery is used. The battery life is about 50,000 hours (previous product: 8000 hours)
  A backup lithium battery is equipped on the controller (master unit, slave unit) as standard.

Use of high-speed CPU

The controller has high-level processing ability through the use of a high-speed CPU.

Ample variations

The actuator (or axis) comes in the following types; nine ball screw types and seven timing belt types.
The motor set position can be selected from one of the four directions for each axis.

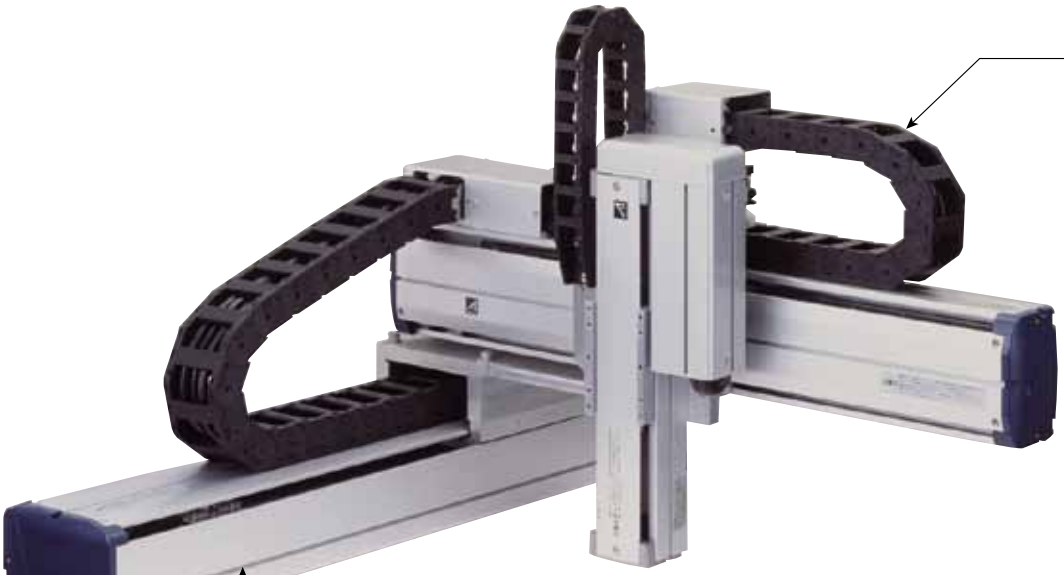

Piping part (Flexible duct)

Selection of a flexible tube is also possible

Actuator (or axis)

■ T-slot where an adapter, etc. can be mounted.

■ To mount the axis (i.e., actuator), attached bolts are set

Controller
(when four axes are controlled)

Discontinue

[Features of actuator]

◎ Absolute encoders are equipped on all types as standard.
No home return operation is required.

◎ Minimized space for installation
As four types of motor set positions are available for each axis, you can choose a desired set position according to your installation space, thus saving the space.

◎ Attaching importance to basic performance
Highly rigid linear guides and miniature AC servo motor are employed for all types.

[Features of controller]

◎ Compact size
Can be neatly housed in the panel and sized similar to miniature AC servo motor driver.

◎ Easy teaching Compo Arm language is adopted.

◎ Commonality of controller
High performance master unit is available for all models.
Master unit and Slave unit are applicable for 50, 100, 200W axis (exclusive product for 400V).

Master unit

◎ Multi power source available
Power supply voltage (100V to 120VAC, 200V to 240VAC) supports globalization of products.

◎ Pulse line input mode
Pulse input port as standard (only for KCA-20-M10, KCA-20-M40). Real-time operation available.

◎ Multi task function
Multi task function as standard. Multiple tasks can be done at the same time.

High performance master unit

◎ CP control
2D, 3D dimensional linear interpolation, circular interpolation, and pass function as standard.

◎ Move Axis by RS232C
The most suitable move axis in real-time by RS232C connection for image processing.

◎ Designated coordinates general purpose input
General purpose input control (ON, OFF) while traveling is optimal for sealing and application.

◎ Supporting CC-Link
Interface with external devices using CC-Link leads reduced wiring and fast communication of data.

CONTENTS

Discontinue

Product Lineup

[Single axis]

Selection guide: pages 2 to 3

Ball Screw drive

KBB-05D
Stroke: 50 to 500mm
Max. load capacity: 6 to 15kg (horizontal)
Motor: 50W

Page: 14

KBB-07D
Stroke: 50 to 600mm
Max. load capacity: 12 to 30kg (horizontal)
Motor: 50W

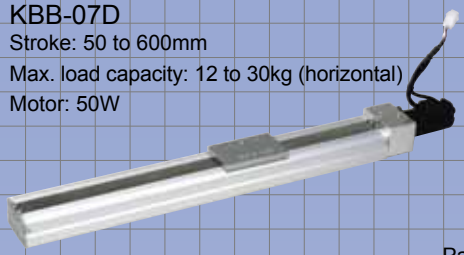

Page: 15

Ball Screw drive

KBB-10
Stroke: 100 to 1050mm
Max. load capacity: 15 to 50kg (horizontal)
Motor: 100W

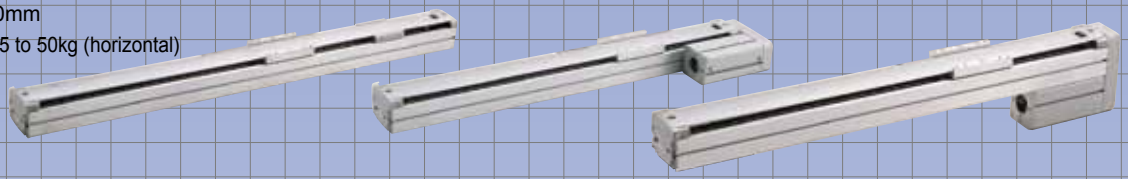

Pages: 16 to 17

Ball Screw drive

KBB-30
Stroke: 100 to 1050mm
Max. load capacity: 20 to 80kg (horizontal)
Motor: 100W
200W

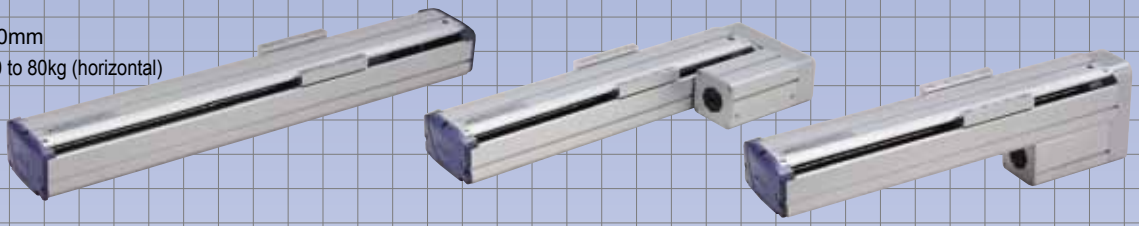

Pages: 18 to 21

Ball Screw drive

KBB-50
Stroke: 200 to 1500mm
Max. load capacity: 60 to 150kg (horizontal)
Motor: 200W
400W

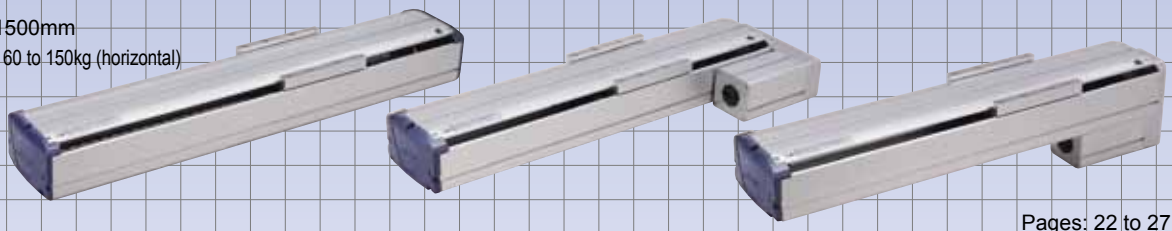

Pages: 22 to 27

Timing belt drive
Stroke: 100 to 2500mm
Max. load capacity: 10 to 40kg (horizontal)
Motor: 100W
200W
400W

KBB-10

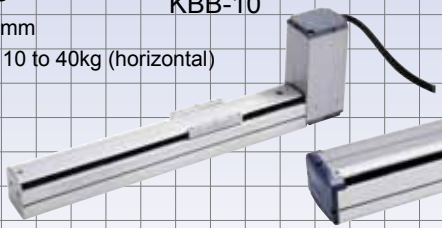

KBB-30

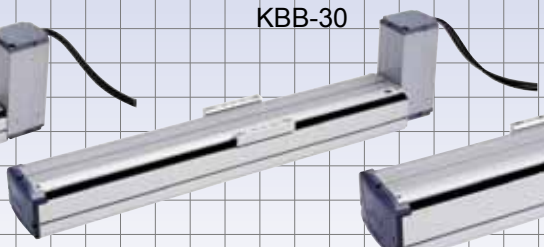

KBB-50

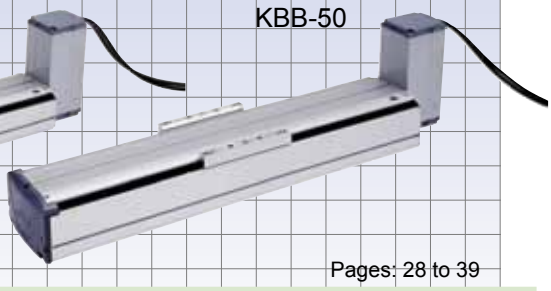

Pages: 28 to 39

R-axis

KBB-00D-RH
Rotation range: 360°
Max. load capacity: 5kg
Motor: 50W
Harmonic drive

KBB-00D-RP
Rotation range: 360°
Max. load capacity: 10kg
Motor: 50W
Planet gear

Pages: 40 to 41

Discontinue

[Components of control system] Controller

Selection guide: pages 4 to 8

Master unit
Pages: 192 to 194

High performance master unit
Pages: 195 to 200

Slave unit
Page: 201

[Components of control system] options

Other options are available.

Teach pendant
Page: 205

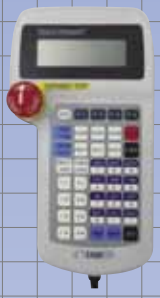

KCA-TPH-4C

Extension I/O unit
Page: 206

Re-generative discharge unit
Page: 204

[Orthogonal axes] Typical Examples

2 axes X-Y
Pages: 50 to 78
Selection guide: page 4

2 axes X-Z
Pages: 79 to 96
Selection guide: page 4

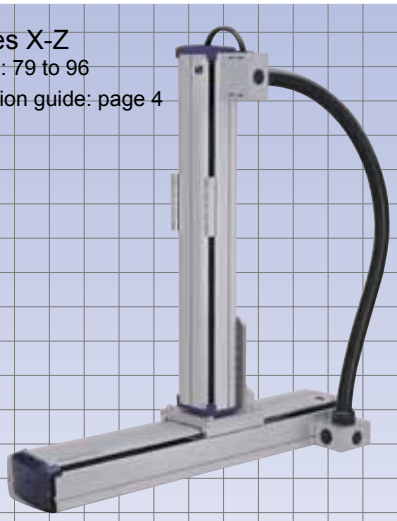

2 axes Y-Z
Pages: 97 to 114
Selection guide: page 5

2 axes Z-Y
Pages: 115 to 130
Selection guide: page 5

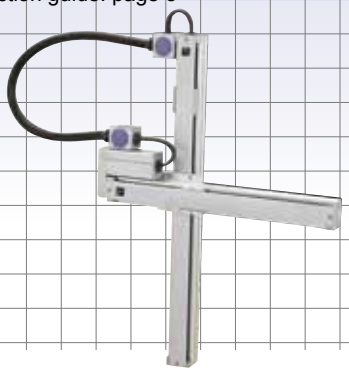

3 axes X-Y-Z
Pages: 131 to 154
Selection guide: pages 6 to 7

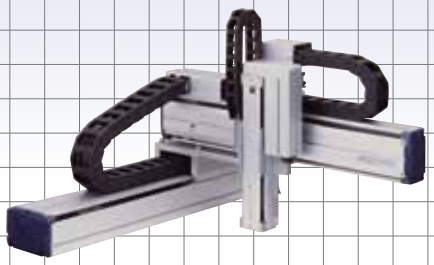

4 axes X-Y-Z-R
Pages: 163 to 170
Selection guide: page 8

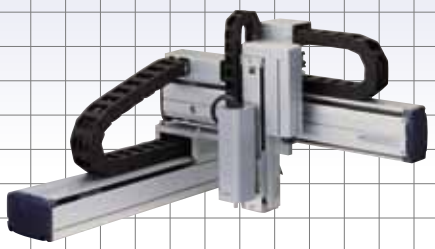

Discontinue

B B S style

For this electric slider <KBB series>, each unit product and optional parts are selected from the catalog to build a robot system.
The product is set up its system as BBS style (a buildup unit). Delivery per a unit product is the basic for <KBB series>.

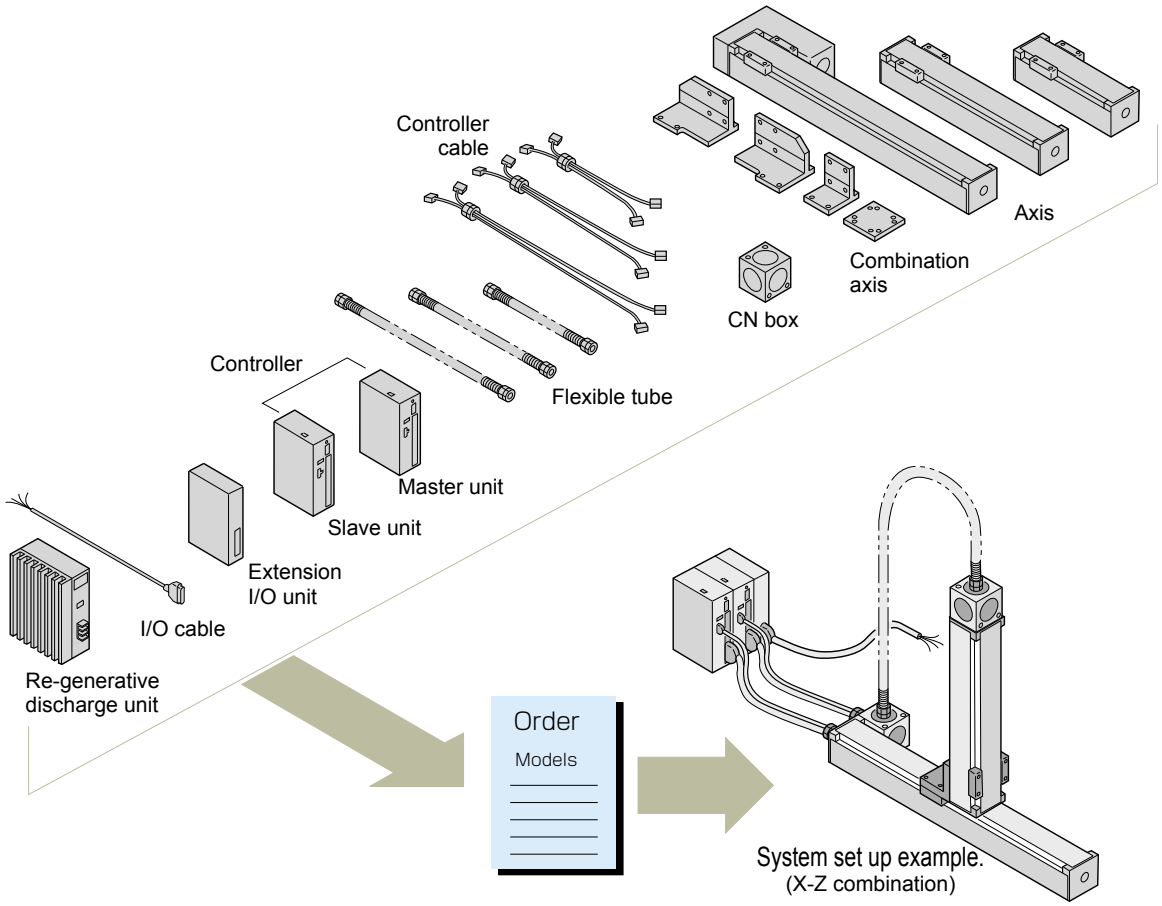

Basic configuration of System

Units for each part are available to build a single axis or an orthogonal multiple axes system by the electric slider <KBB series>.

Axis body unit product

Unit name	model no.	page
Ball screw straight axis	KBB-□□□-ST-□□□□-□□	14 to 27
Ball screw turning axis	KBB-□□□-U□-□□□□-□□	
Timing belt driven axis	KBB-□□□-B□-□□□□-□□	28 to 39
R-axis	KBB-00D-R□-□	40, 41

Controller body

Unit name	model no.	page
Master unit	KCA- 20-M□□	192 to 194
High-Performance Master Unit	KCA-20-M0□	195 to 200
Slave unit	KCA- 10-S□□	201 to 202

□ is for the symbols and numbers being used when detailed specifications are decided.
Please refer to the page of each unit for details.

Axis related unit products

Unit name	model no.	page
Axis Combination Bracket	KBA-□□- BK- □□□	172 to 179
Support Guide	KBA-□□-SG-M□□	187 to 188
Controller cable	KBB-10-CC-M□□	180
CN box	KBA-10-BX-□□□	180 to 183
Flexible tube	KBA-10-FT- □□□	184
Flexible duct	KBA-10-FD-□□□	185
Tray	KBA-10-TT- □□□	186
Strain relief	KBA-10-SC-A 02	189
Cable grip	KBA-10-CG-M2□	190

Controller related unit product

Unit name	model no.	page
Extension I/O unit	KCA-20-EX-□□	206 to 207
I/O cable	KCA-10-IC-□□□	208
	KCA-ICBL-□□□	208
Link cable	KCA-10-LC-A□□	203
Re-generative discharge unit	KCA-ABSU-□000	204

Discontinue

Example 1 of basic system configuration

Orthogonal type 2 axes

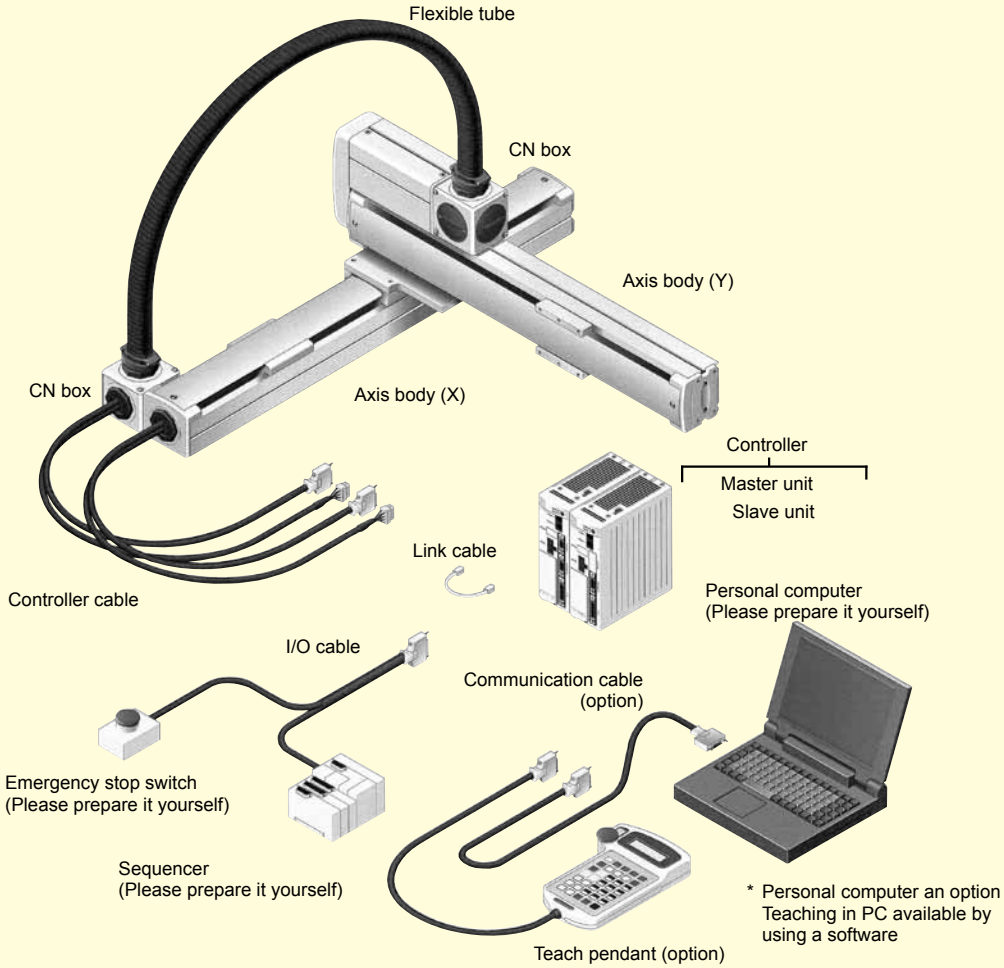

Examples of unit products for single axis type basic configuration

Unit name	model no.	number	page
Axis body	KBB-□□□-ST-□□□N-□□	1	14 to 39
Master unit	KCA-20-M□□	1	192 to 194
Controller cable	KBB-10-CC-M□□	1	180

Examples of unit products for orthogonal 2 axes type basic configuration

Unit name	model no.	number	page
Straight axis	KBB-□□□-ST-□□□N-□□	1	14 to 39
Right side mounted axis	KBB-□□□-UR-□□□N-□□	1	
Combination axis	KBA-□□-BK-L02	1	174 to 175
CN box	KBA-10-BX- □□	2	180
Flexible duct	KBA-10-FD- □□□ } Either duct or tube must be selected	1	185
Flexible tube	KBA-10-FT- □□□	1	184
Controller cable	KBB-10-CC-M□□(X)	1	180
Controller cable	KBB-10-CC-M□□(Y)	1	180
Master unit	KCA-20-M00	1	195 to 200
Slave unit	KCA-20-S□□	2	201 to 202
Link cable	KCA-10-LC-A□□	2	203

* Teach pendant and personal computer software are available as optional products. Refer to the pages 205, 209, and 210.

◆ If necessary, the function of the system can be more efficient by adding unit and other devices.
Refer to the specifications section of each unit or the optional products section for details.

Safety precautions

Always read this section before starting use.

When designing and manufacturing devices using electric actuator, the manufacturer has an obligation to manufacture a safe device, and to check that the safety of the device's mechanical mechanism and the system operated by the electrical control that controls the device is secured.
It is important to select, use, handle, and maintain the product appropriately to ensure that the CKD product is used safely.
Observe warnings and precautions to ensure device safety.
Check that device safety is ensured, and manufacture a safe device.

WARNING

1 This product is designed and manufactured as a general industrial machine part.
It must be handled by an operator having sufficient knowledge and experience in handling.

2 Use within the product's specification range.

This product must be used within its stated specifications. Do not attempt to modify or additionally machine the product.
This product is intended for use as a general-purpose industrial device or part. It is not intended for use outdoors or for use under the following conditions or environment.
(Note that this product can be used when CKD is consulted prior to use and the customer consents to CKD product specifications. The customer must provide safety measures to avoid risks in the event of problems.)

❶ Use for special applications including nuclear energy, railway, aircraft, marine vessel, vehicle, medical equipment, equipment, or applications coming into contact with beverage or food, amusement equipment, emergency shutoff circuits, press machine, brake circuits, or for safeguard.
❷ Use for applications where life or assets could be adversely affected, and special safety measures are required.

3 Observe corporate standards and regulations, etc., related to the safety of device design.

4 Do not remove devices until safety is confirmed.

❶ Inspect and service the machine and devices after securing the safety of all the systems related to this product.
❷ Exercise caution as high temperature and charged parts can be present even when operation is stopped.
❸ Before starting device inspection or maintenance, turn off the device power and other powers to related devices, release compressed air in the system, and check leakage current.

5 Observe warnings and cautions in the instruction manual of each product.

❶ Provide a safeguard to prevent entry to the movable scope of electric actuator.
In case of emergency, connect the controller's emergency stop push button switch and install it in a place facilitating operation.
Be sure that the emergency stop push button has a structure which will not allow automatic restoration or unsafe restoration by operator.
❷ Use the shaft with a built-in brake when the shaft is not installed horizontally.
If the servomotor is turned off (including emergency stop or alarm) or brakes are turned off, the actuator may fall and cause injury.
❸ Unexpected movement may occur during robot teaching or test operation, so keep hands, etc., away from the actuator. When conducting operation with the shaft not visible, be sure before starting operation that safety is ensured even if the actuator moves.
❹ The shaft with a built-in brake cannot completely clamp the actuator in all cases. When the slider is moved with unbalanced load during maintenance or the machine is stopped for a long time, it may not be sufficient to stop the shaft with the brakes alone for ensuring safety. Be sure that the equipment is in a balanced state or provide a mechanical locking mechanism.
❺ It may take several seconds to stop in an emergency, depending on rotation speed and load.

6 To prevent electric shock, observe warnings and cautions.

❶ Do not touch the heat sink, cement resistor and motor installed in the controller.
Failure to do so may cause burn because these parts are hot. Take sufficient time before conducting inspection and other operations.
Even immediately after the power is turned off, a high voltage is applied until the electric charge accumulated in the internal capacitor is discharged. Wait three minutes or so after turning the power off before touching these parts.
❷ Turn off the controller power source before conducting maintenance or inspection.
Electric shocks from high voltage may occur.
❸ Do not connect or disconnect connectors while power is on. Misoperation, faults, or electrical shock may occur.

7 Before restarting a machine or system, check that measures are taken so that parts do not come off.

8 Install a surge protector.

Wire according to “JIS B 9960-1: 2008 Safety of Machinery • Electrical Equipment of Machines • Part 1: General Requirements”, and install over current protection device (such as molded case circuit breakers and circuit protectors) to the primary sides of the motor (wiring: red, black) and control (wiring: red (with white line), black (with white line)) power sources.
(Excerpt from JIS B 9960-17.2.1 general information)
A surge protector must be installed when the circuit current of the machine (electric equipment) is greater than the rated value of the components or the allowable ampacity of the conductor. The rated value or the set value that must be selected is provided on 7.2.10.

9 Observe the precautions below to prevent accidents.

■ The precautions are ranked as “DANGER”, “WARNING” and “CAUTION” in this section.

⚠ DANGER: When a dangerous situation may occur if handling is mistaken leading to fatal or serious injuries, or when there is a high degree of emergency to a warning.

⚠ WARNING: When a dangerous situation may occur if handling is mistaken leading to fatal or serious injuries.

⚠ CAUTION: When a dangerous situation may occur if handling is mistaken leading to minor injuries or physical damage.

Note that some items described as "CAUTION" may lead to serious results depending on the situation.
In any case, important information that must be observed is explained.

Limited Warranty and Disclaimer

1 Term of warranty

“Warranty Period” is one (1) year from the first delivery to the customer.

2 Scope of warranty

In case any defect attributable to CKD is found during Warranty Period, CKD shall, at its own discretion, repair the defect or replace the relevant product in whole or in part, according to its own judgment. In no event CKD shall never be liable for the costs in relation to and the damages resulting from the (un) installation of the product.
This Limited Warranty will not apply to:

(1) Product abuse/misuse contrary to conditions/environment recommended in its catalogs/specifications
(2) Faults caused by careless or incorrect handling, or improper control.
(3) Faults caused by factors other than delivered parts.
(4) Faults caused by improper product use.
(5) Faults due to modifications to the product structure, performance, or specifications by a party other than CKD after the product is delivered, or faults caused by repairs not designated by CKD.
(6) Damage that could have been avoided if the user’s machine or equipment had functions and structure, etc., considered normal within the industry.
(7) Failure due to causes not foreseeable with technology at the time of delivery.
(8) Faults due to fires, earthquakes, water damage, lightning, other acts of nature, acts of God, pollution, salt damage, gas damage, abnormal voltage, or other external forces.

The warranty here refers to the warranty of the actually delivered product, and does not include any damage resulting from a fault in the delivered product.

3 Warranty for exported products

(1) Products returned to the CKD factory or to a company or factory designated by CKD shall be repaired. Work and cost necessary for transportation shall not be compensated for.
(2) The repaired product shall be returned to a designated place in Japan with domestic packaging specifications. This warranty specifies basic conditions. If warranty details in individual specification drawings or specifications differ from these warranty conditions, specification drawings or specifications shall take priority.

4 Compatibility confirmation

The customer have the responsibility to check for the compatibility of our products to the machineries, systems and equipments it will be used in.

5 Service range

The price of delivered product does not include technical support fee. For the following cases, we will charge separately.

(1) Always read this section before starting use.
(2) Do not operate the product where there are hazardous materials such as combustibles, flammables, explosives.
(3) Do not disassemble this product.

Discontinue

Safety precautions

Electric actuator: Safety precautions

Always read this section before starting use.
Refer to the content for detailed precautions of each series.

Danger — Design& Selection

1. Do not operate the product in flammable or explosive atmospheres.

Warning — Design& Selection

1. Use within the products specification range.
2. Install a protection cover in case of possible danger to the operator.
   - If the electric actuator's movable portions may pose danger to the operator from entering its operation range or touching the movable portions directly.
   - Do not get close to the robot if you wear a medical device such as pacemaker. Strong magnet used in the robot may cause misoperation of the pacemaker and other devices.
3. Take possibility of power source failure into consideration.
   - In case of failure in the power source, take countermeasures without causing trouble or damage to the operator or equipment.
4. Take the operation status during emergency stop into consideration.
   - In case the safety device stops the machine due to emergency stop, power outage or other system errors, the electric actuator must be designed so that its movement causes no damage to the operator and equipment.
5. Consider the operation status if the machine is reactivated after emergency stop or abnormal stop.
   - The machine must be designed so that reactivation causes no damage to the operator or equipment.
     If the electric actuator must be reset the start position, be sure to provide the machine with safe control device.
6. Keep the product away from rain, water, direct sunlight.
7. Do not operate the actuator in corrosive atmospheres.
   - Failure to do so may result in damage or faulty operation.
8. Do not use the actuator under shock or vibration conditions.
9. Keep the product away from dust, drop of water, and oil.
10. Do not apply load exceeding the allowance specified in the selection document the actuator.

Caution — Design& Selection

1. Do not hit the trolley table against the stroke end.
2. Specify the maintenance conditions in the equipment instruction manual.
   - Product functions may be deteriorated significantly due to usage, service conditions or maintenance. This may results in failure to ensure safety. Conduction maintenance with accuracy allows the product to fully exert its functions.
3. Read through the instruction manual to perform installation and adjustment properly.
4. The product is manufactured in conformity with the related standards. Never attempt to modify the product.

Caution — During Use & Maintenance

1. Read through the instruction manual before using the machine.
2. Replacement of timing belt when mounting axis is used vertically.
   ❶ Check regularly after each 500 hours. If the timing belt is damaged or deteriorated, replace it as soon as possible.
   ❷ Make sure to replace after 3000 hours operation.
3. If any abnormality is found, contact our sales office nearest you.

Discontinue

Selection guide

Discontinue

■Load capacity single axis table (horizontal) Ball screw driven Timing belt driven

Page	Type	stroke (mm)	Lead (mm)	Max. speed (mm/s)	Max. load capacity (kg)
P14	KBB-05D	50 to 500	⑫	800	6
			⑥	400	15
P15	KBB-07D	50 to 600	⑫	800	12
			⑥	400	30
P16 to P17	KBB-10E	100 to 1050	⑳	1200	15
			⑩	600	30
			⑤	300	50
P18 to P19	KBB-30E	100 to 1050	⑳	1200	20
			⑩	600	50
			⑤	300	50
P20 to P21	KBB-30F	100 to 1000	⑳	1200	40
			⑩	600	80
			⑤	300	80
P22 to P23	KBB-50F	200 to 1500	⑳	1200	60
			⑩	600	100
			⑤	300	100
P24 to P25	KBB-50G	200 to 1500	⑳	1200	100
			⑩	600	150
			⑤	300	150
P28 to P29	KBB-10E	100 to 1800	㉑	1000	15
P30 to P31	KBB-10F	100 to 1800	㊷	2000	10
			㉑	1000	20
P32 to P33	KBB-30E	100 to 2500	㉑	1000	15
P34 to P35	KBB-30F	100 to 2500	㊷	2000	20
			㉑	1000	40
P36 to P37	KBB-50F	200 to 2500	㉑	1000	40
P38 to P39	KBB-50G	200 to 2500	㊷	2000	20

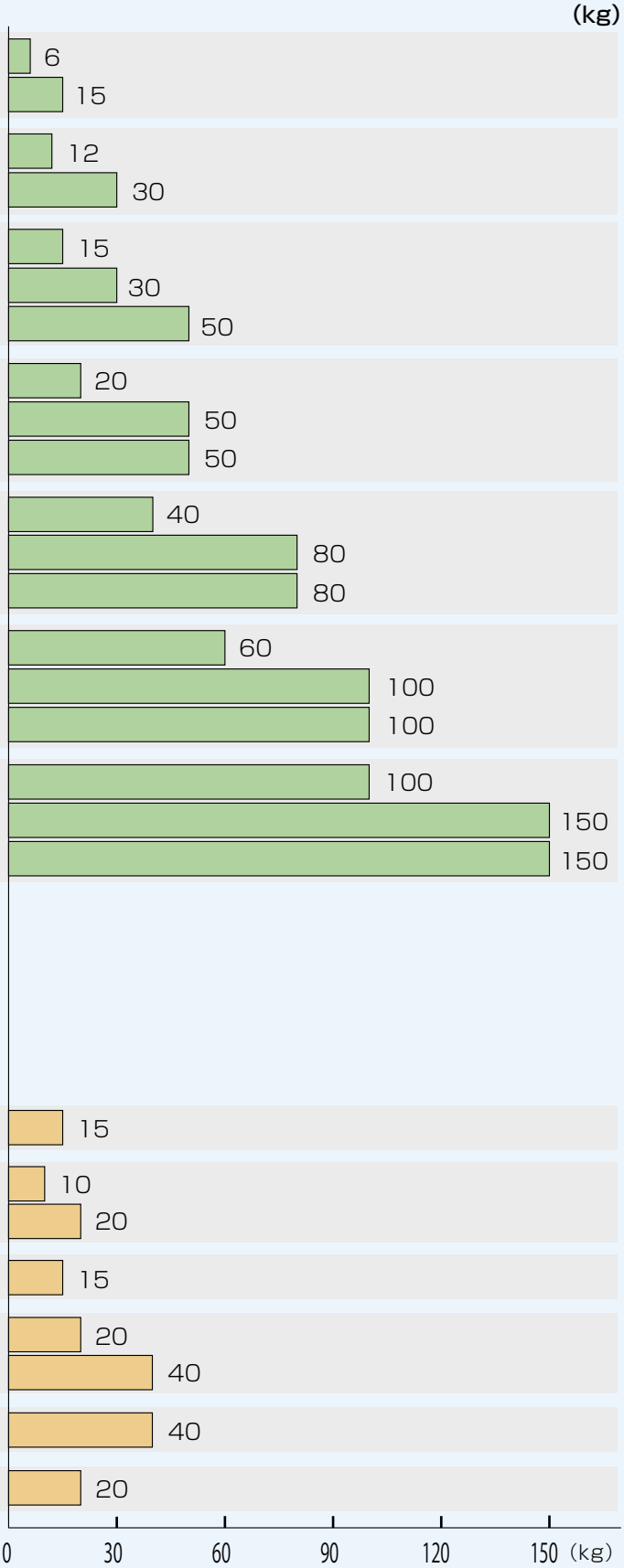

Discontinue

■Load capacity single axis table (Vertical) Ball screw driven

Page	Type	stroke (mm)	Lead (mm)	Max. speed (mm/s)	Max. load capacity (kg)
P14	KBB-05D	50 to 500	⑫	800	3
			⑥	400	4
P15	KBB-07D	50 to 600	⑫	800	4
			⑥	400	8
P16 to P17	KBB-10E	100 to 1050	⑳	1200	3 / 5
			⑩	600	8 / 12
			⑤	300	15 / 22
P18 to P19	KBB-30E	100 to 1050	⑳	1200	3 / 5
			⑩	600	8 / 12
			⑤	300	15 / 22
P20 to P21	KBB-30F	100 to 1000	⑳	1200	3 / 10
			⑩	600	8 / 20
			⑤	300	15 / 40
P22 to P23	KBB-50F	200 to 1500	⑳	1200	3 / 12
			⑩	600	8 / 25
			⑤	300	15 / 50
P24 to P25	KBB-50G	200 to 1500	⑳	1200	25
			⑩	600	50
			⑤	300	60

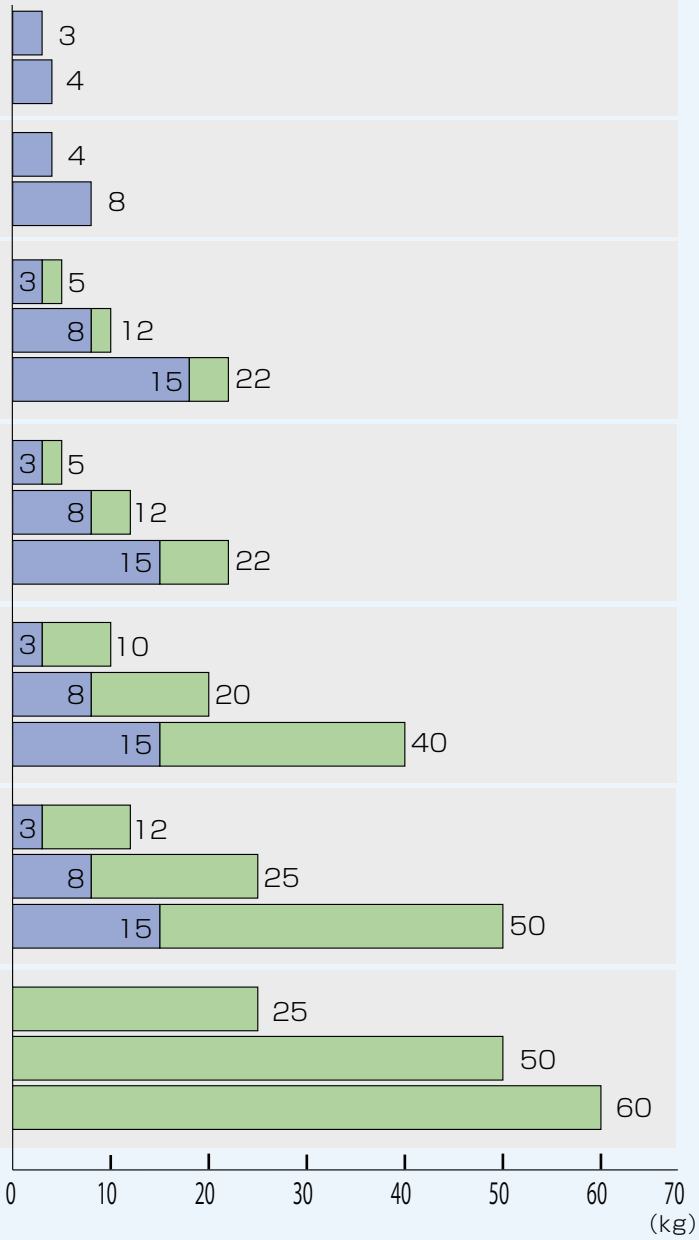

When a regenerative discharge unit is used.

■Load capacity single axis table (Rotation) Harmonic drive Planet gear

Page	Type	Ranger of rotation (deg.)	Reduction ratio	Max. speed (deg./s)	Max. load capacity (kg)
P40	KBB-00D-RH	360	1/50	360	5
P41	KBB-00D-RP	360	1/21	857	10

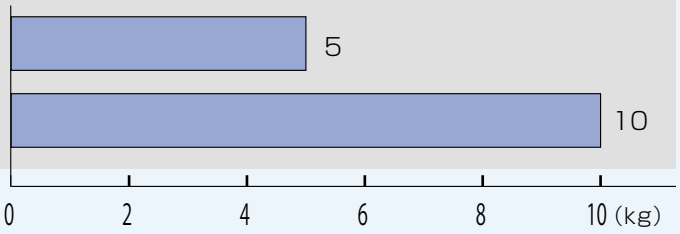

Discontinue

Load capacity 2-axis (X-Y) combination table

Pages 50-71

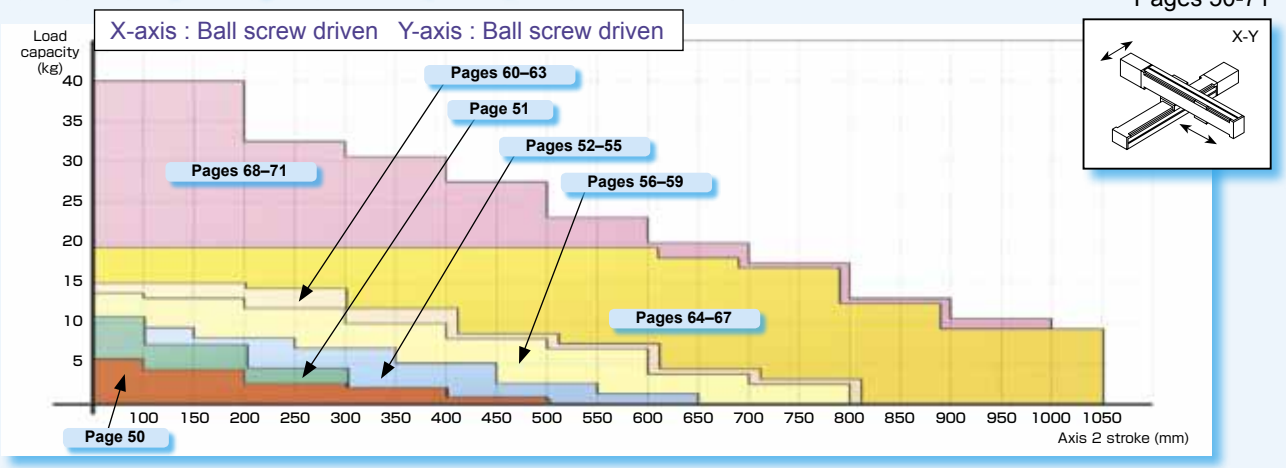

Pages 72-78

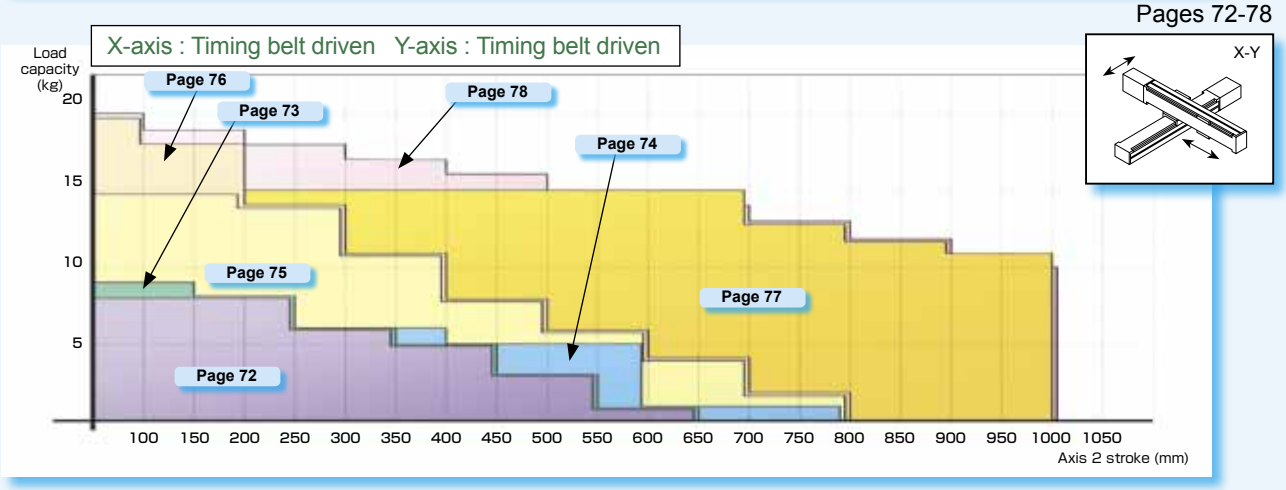

Load capacity 2-axis (X-Z) combination table

Pages 79-90

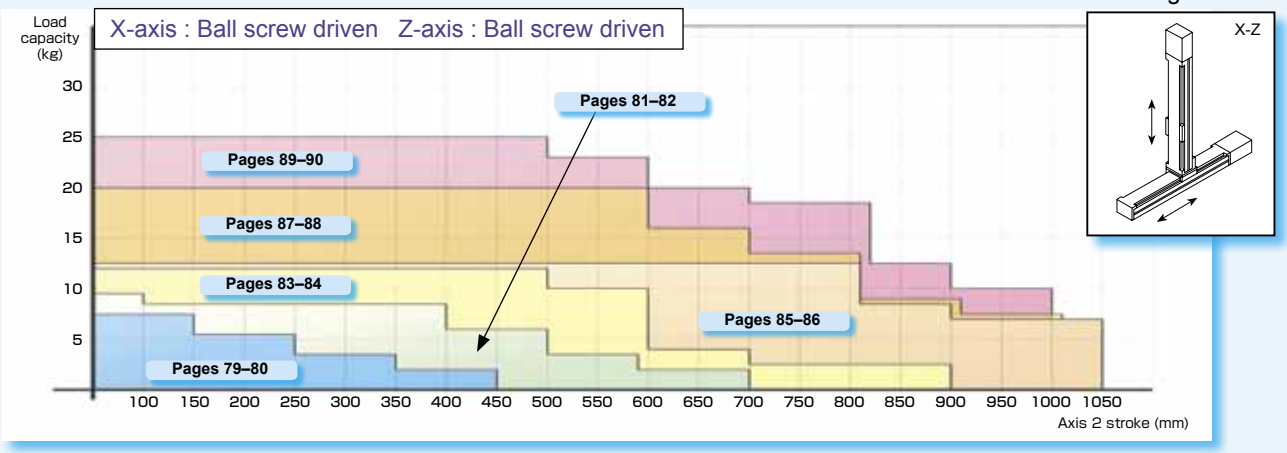

Pages 91-96

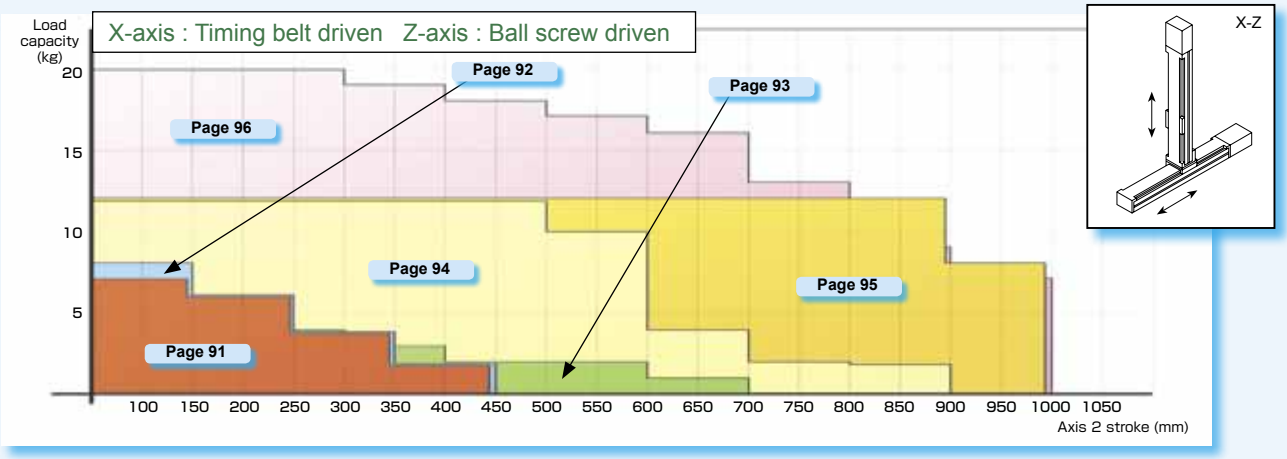

Discontinue

Load capacity 2-axis (Y-Z) combination table

Pages 97-108

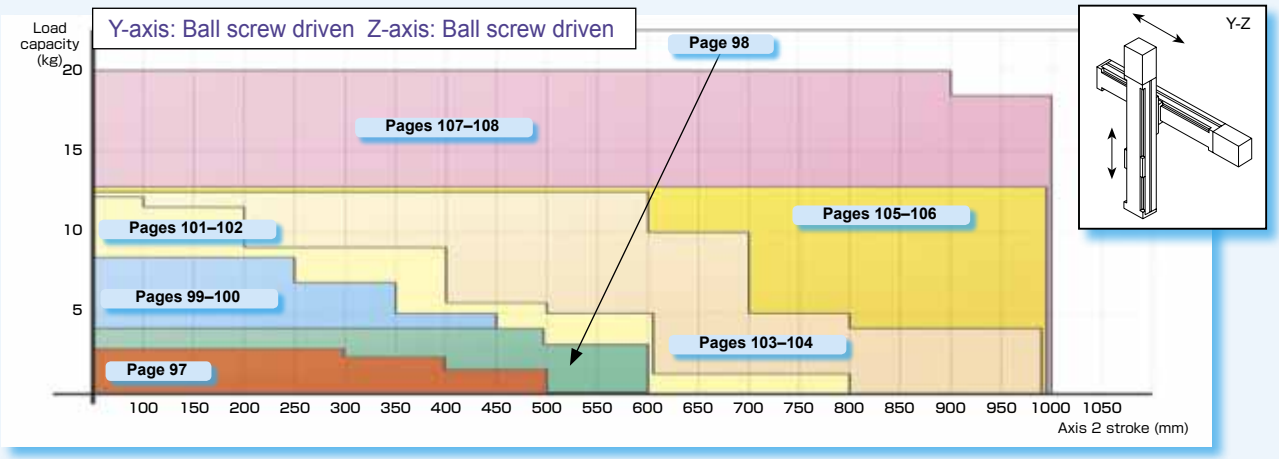

Pages 109-114

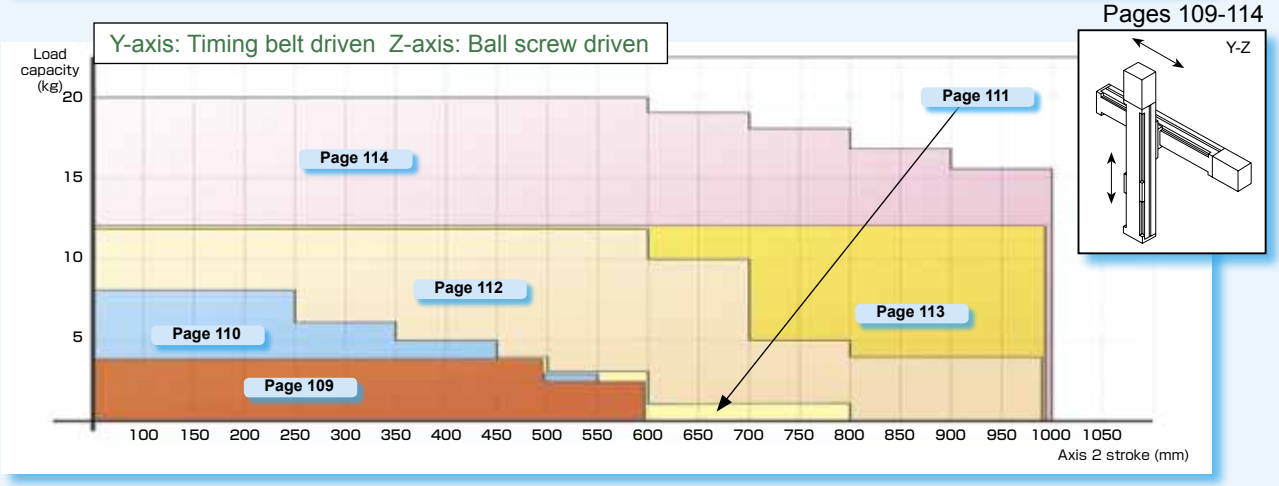

2-axis (Z-Y) combination load capacity table

Pages 115-124

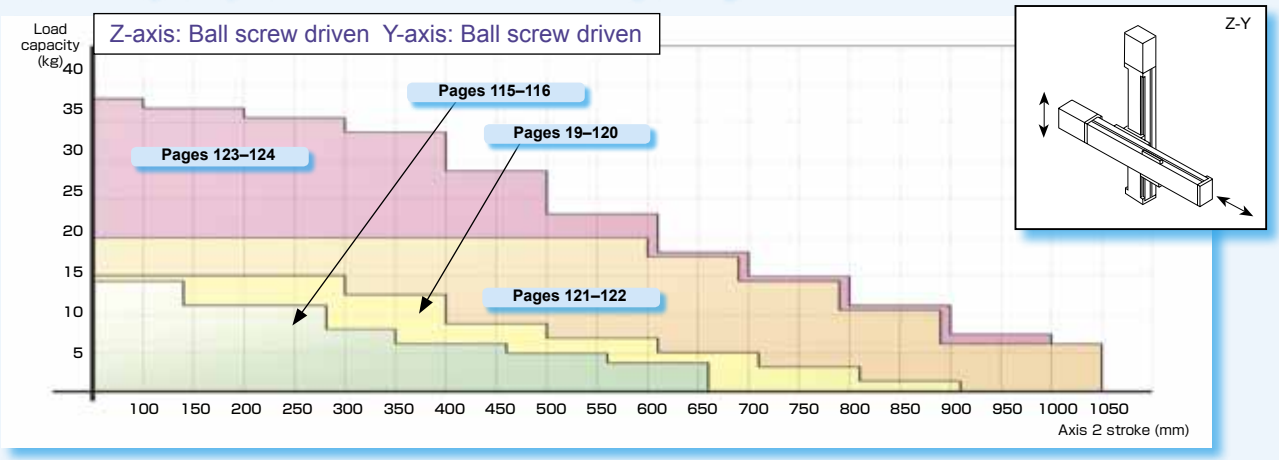

Pages 125-130

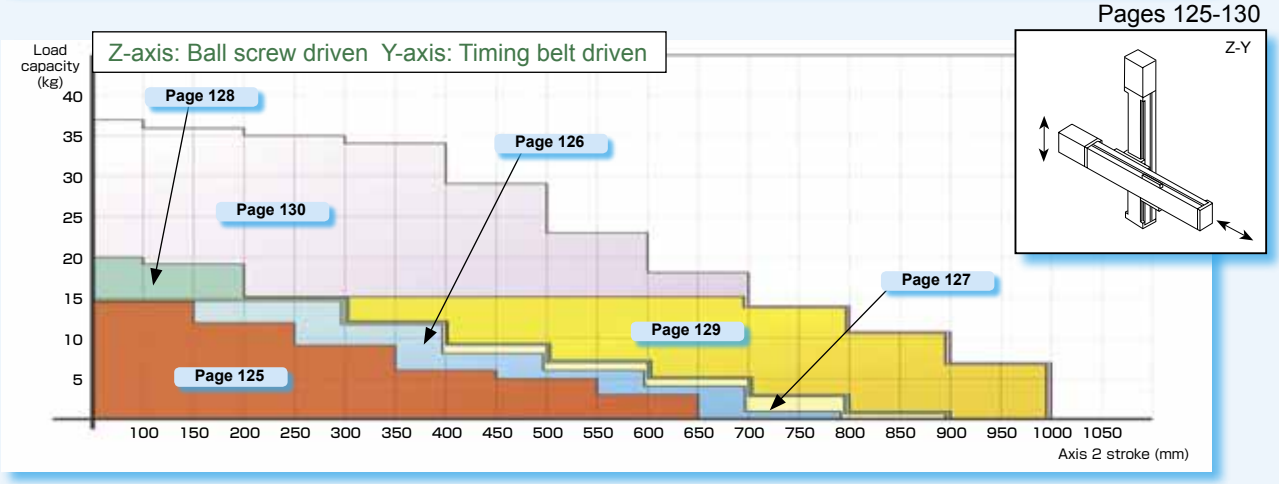

Discontinue

■ Load capacity 3-axis (X-Y-Z) combination table

X-axis: Ball screw driven Y-axis: Ball screw driven Z-axis: Ball screw driven

Pages 131-154

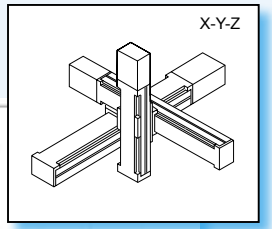

Z-axis stroke: 100, 150 mm

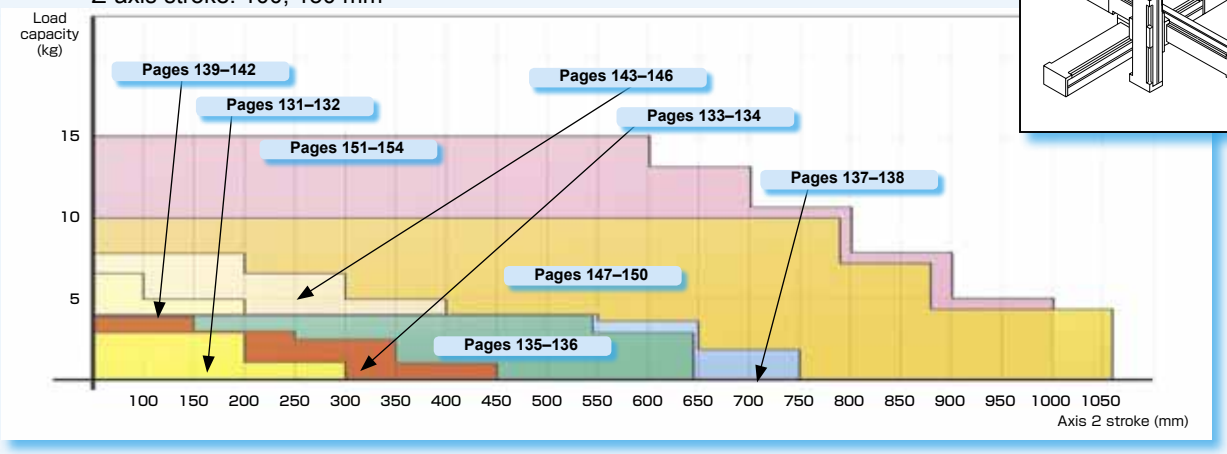

Z-axis stroke: 200, 250 mm

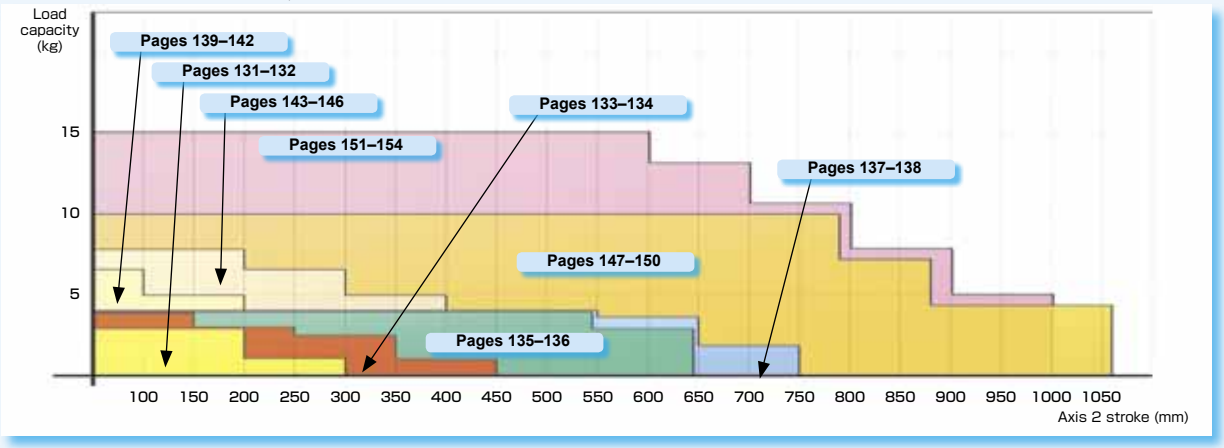

Z-axis stroke: 300, 350 mm

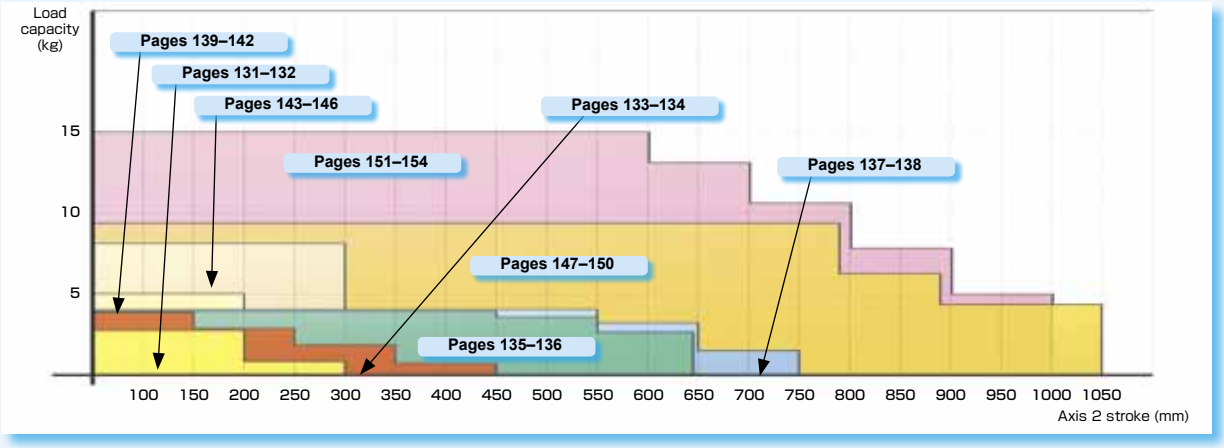

Discontinue

■ Load capacity 3-axis (X-Y-Z) combination table

X-axis: Timing belt driven Y-axis: Timing belt driven Z-axis: Ball screw driven

Pages 155-162

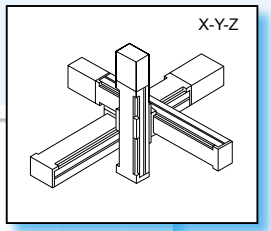

Z-axis stroke: 100, 150 mm

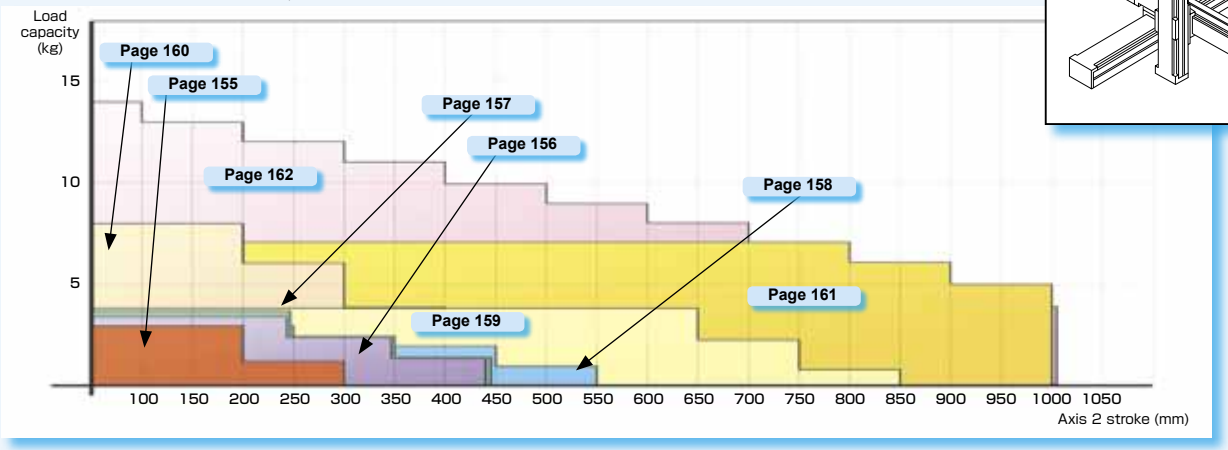

Z-axis stroke: 200, 250 mm

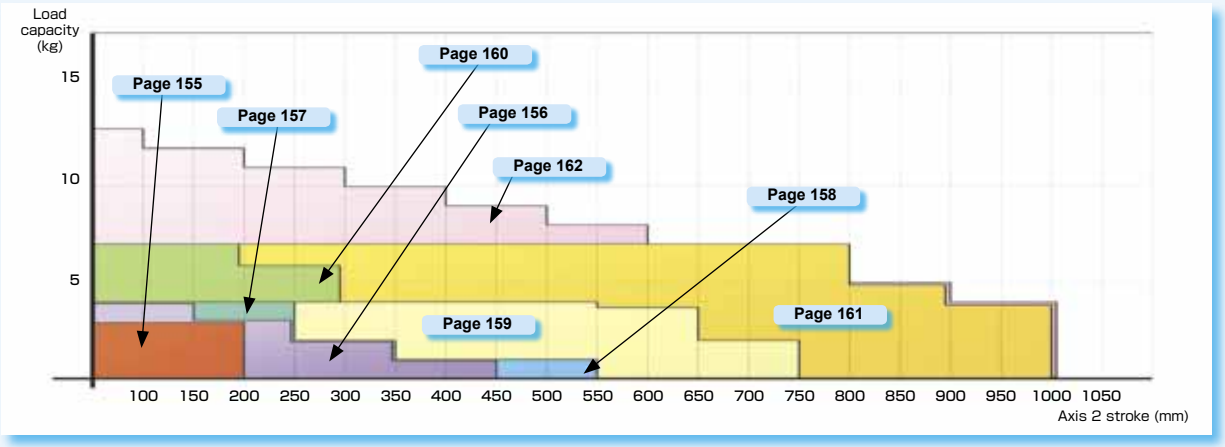

Z-axis stroke: 300, 350 mm

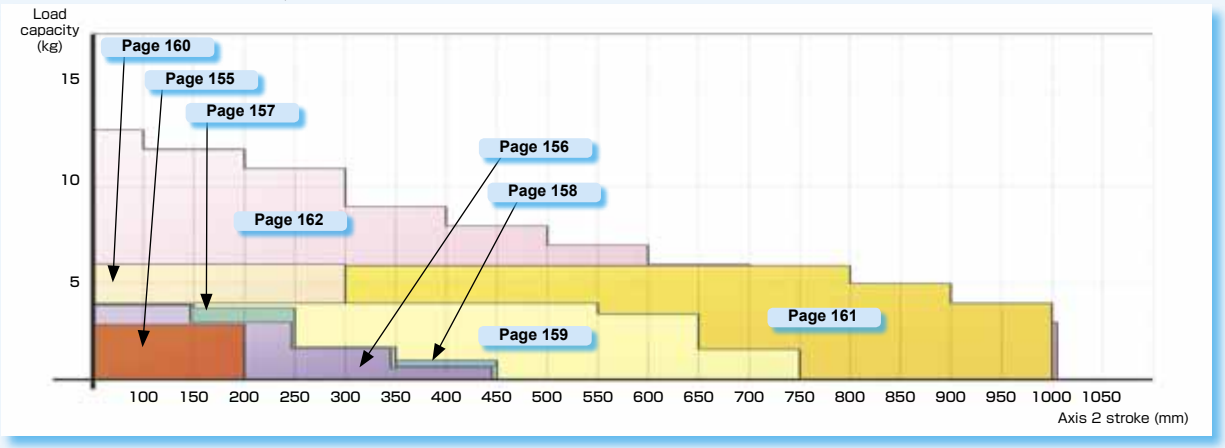

Discontinue

■ Load capacity 4-axis (X-Y-Z-R) combination table

X-axis: Ball screw driven Y-axis: Ball screw driven Z-axis: Ball screw driven R-axis: Rotating axis

Pages 163-170

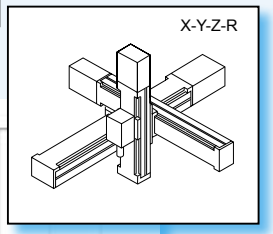

Z-axis stroke: 100, 150 mm

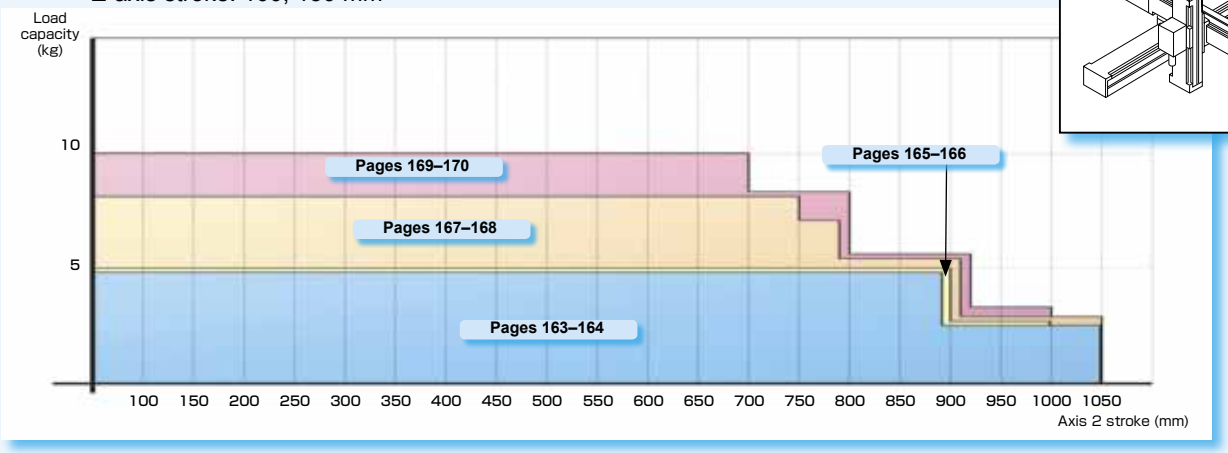

Z-axis stroke: 200, 250 mm

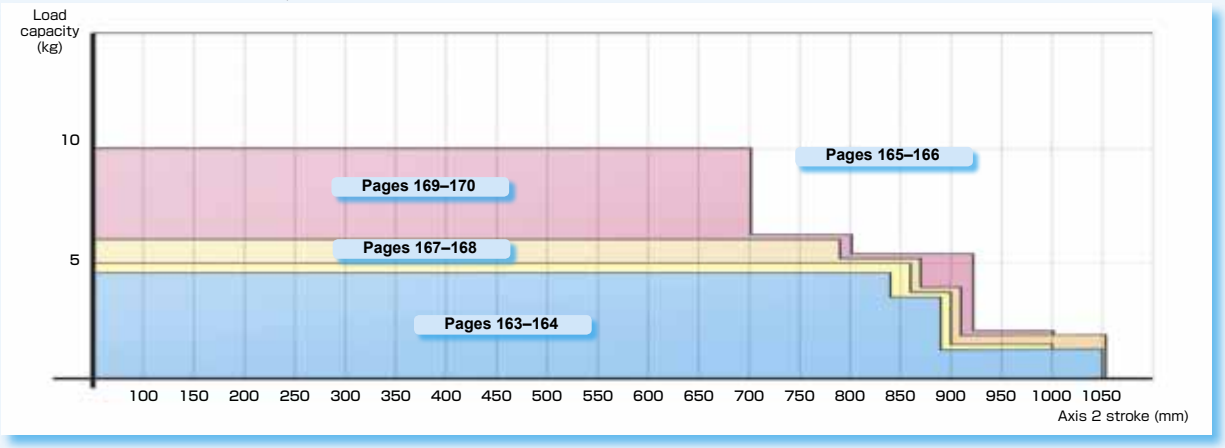

Z-axis stroke: 300, 350 mm

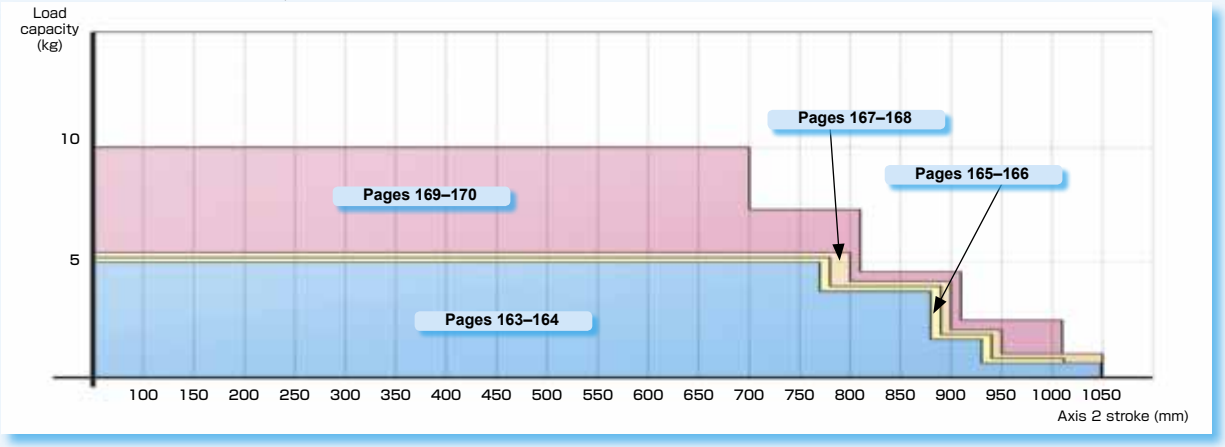

■Applications

Transfer

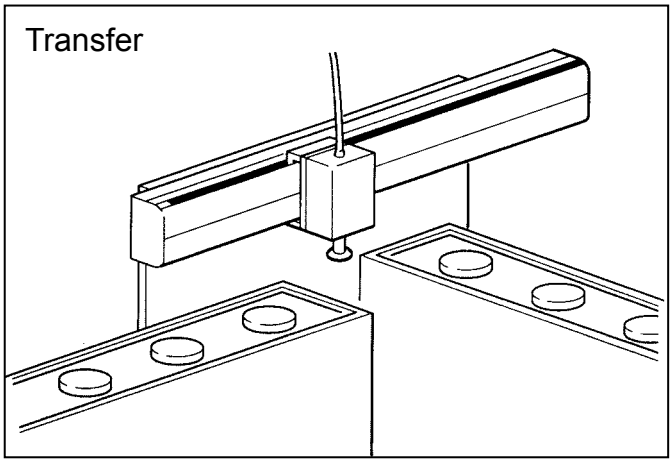

Loading parts

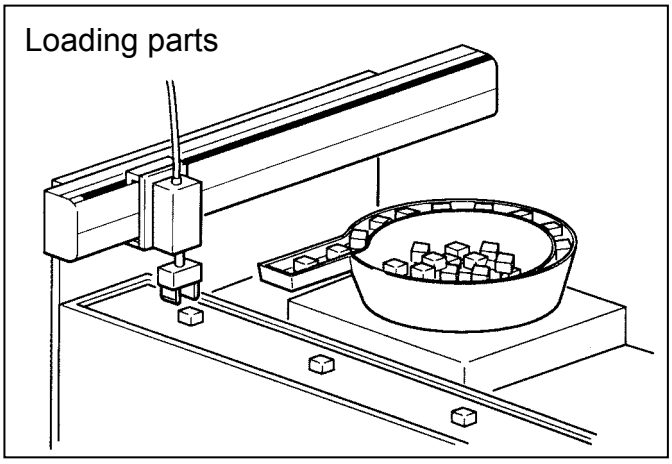

Inspection

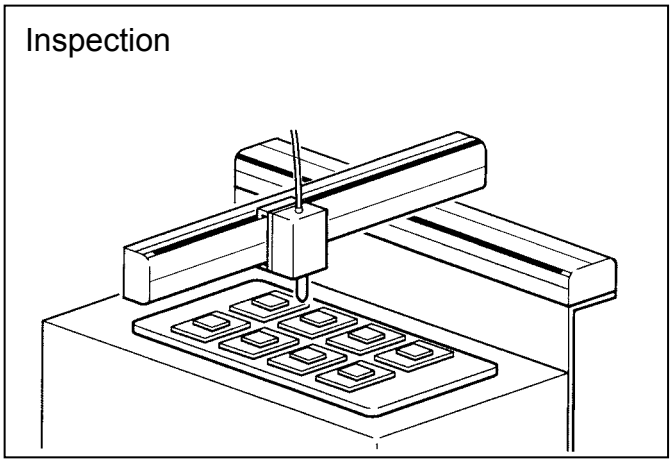

Palletizing

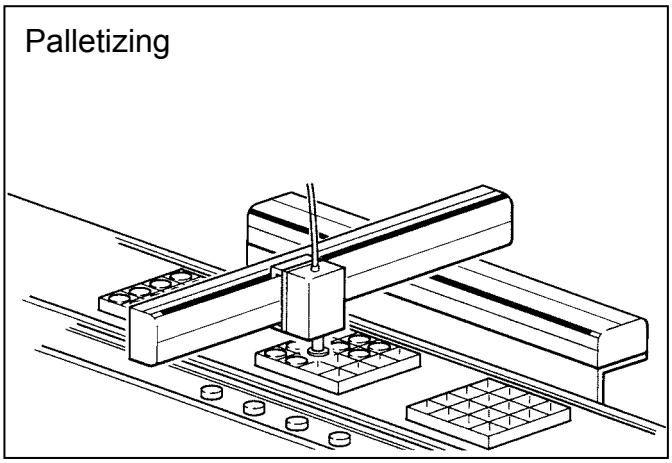

Parts assembly

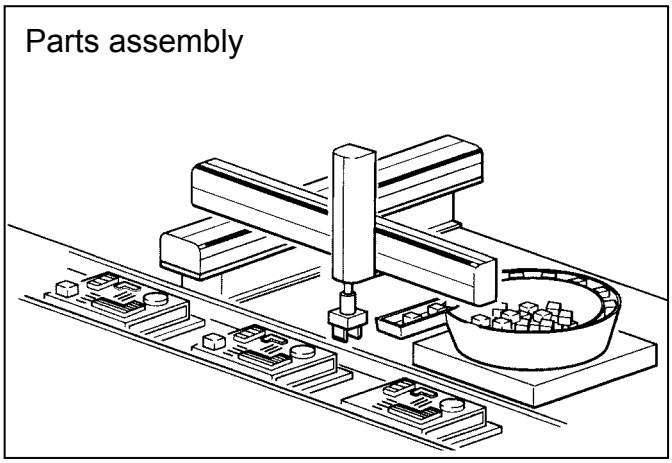

Sealing

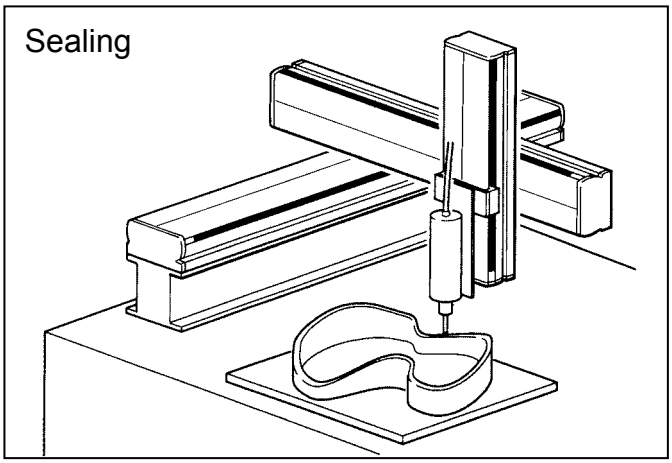

Cutting

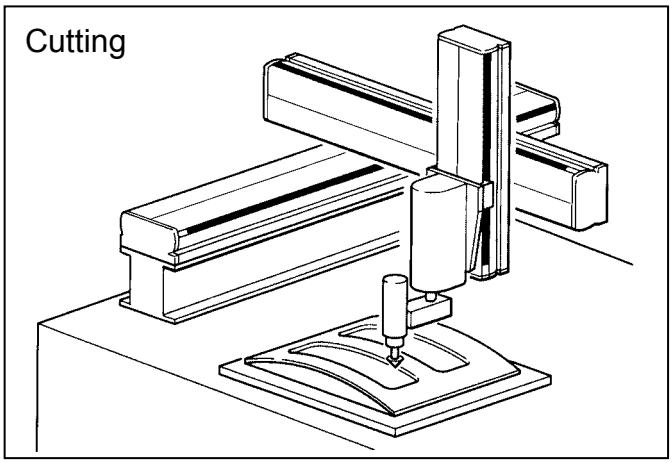

Discontinue

Before you read this manual

■ Definition of terms ■

[Axis1 and Axis2]: When forming an orthogonal axes configuration, an axis which is mounted directly on the userprovided equipment is called the “Axis 1”, and the other axis which is mounted on the Axis 1 with a bracket is called the “Axis 2”.

[Straight axis]: An axis whose ball screw and servo motor shaft centers are placed along a straight line.

[Motor, Right side mounted axis, Left side mounted axis and Bottom side mounted axis]: An axis whose servo motor is turned back, which is coupled with a ball screw via a timing belt. When the motor is located on the right side when seen from the end block side of the actuator with the slider of the actuator facing up, this axis is called the “right side mounted motor axis.” Likewise, when it is located on the left side and bottom side, the axis is called the “left side mounted motor axis” and “bottom side mounted motor axis”, respectively.

[Long slider type]: Used for the traveling type axis 2 (BB30, BB50) or for an axis on which large load moment is exerted.

[Medium slider type]: Used for the axis 1 of an orthogonal axes configuration or as the standard axis of a single axis configuration.

[Short slider type]: Used for a single axis with relatively small load moment or for the axis 2 and axis 3 of an orthogonal axes configuration.

[Work area]: The location of the work area is defined by the side (right or left) when viewed from the end block side of the axis 1 in an orthogonal axes configuration.

[Axis 2 slider motor side]: When the Axis 2 slider is seen from the end block side of the Axis 1 in an orthogonal axes configuration, it is located on the rear side of the axis. (When the slider is located on the front side (standard), it is called the “slider end side”.

[Axis traveling type]: Generally, the frame of the actuator (axis) is secured and the slider moves. For the axis traveling type, the slider is secured and the frame of the actuator moves.
A hand or other tooling is attached to the end block at the end of the frame.

[Table type]: In a single or orthogonal axes configuration, the slider surface is horizontal and faces up to allow the work from the upper side.

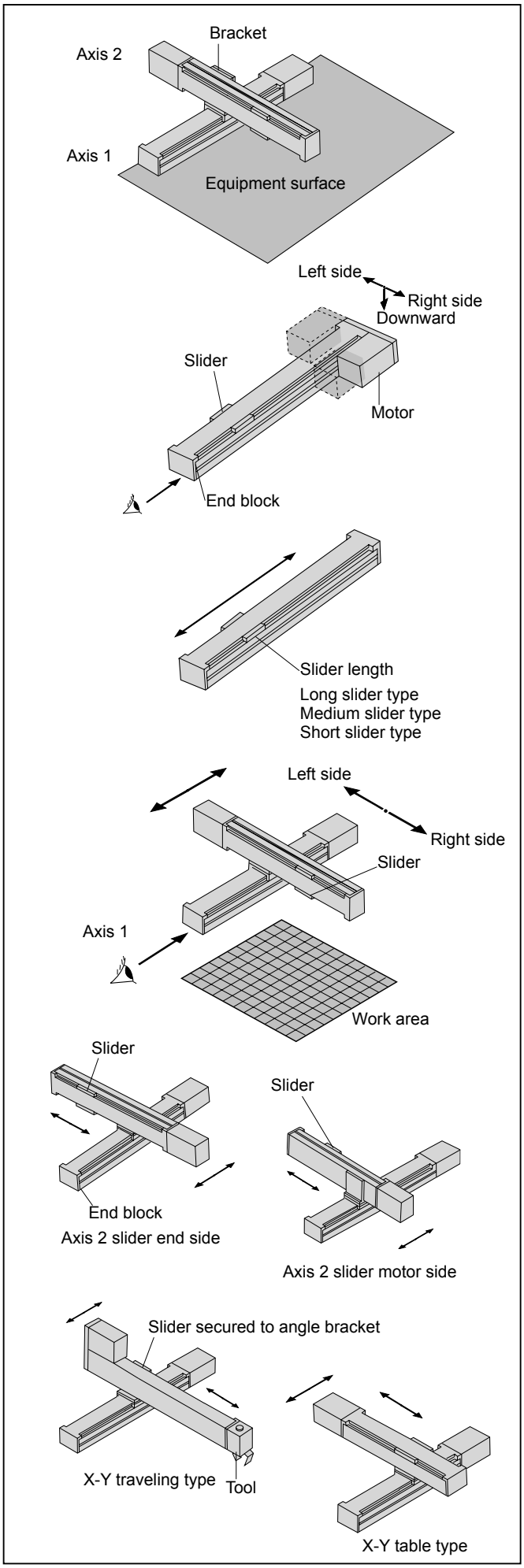

Terms used in this catalog

Terms used throughout this publication are classified into the two groups; general robot terms and those specific to a KBB Series.

■ Axis related terms

[Slider]
The part of the actuator which moves along a straight line. A hand or other tooling is assembled to the slider.
When a bracket for axis combination is mounted on the slider, two axes system can be configured.
This is also called the "saddle" in overseas nations.

[Actuation]
Components for power transformation, such as ball screw and timing belt, which are used to drive the movable part of the actuator.

[Maximum speed]
Maximum speed (mm/s) which the actuator can attain under specified conditions (load capacity, for instance).

[Maximum load capacity]
Maximum load capacity (kg) under specified conditions (acceleration/deceleration time, speed, rigidity, service life, etc.).

[Allowable load moment]
Allowable force (moment) in N·m (kg·m) which acts on the movable part (slide) of the actuator. It comes in two types; static and dynamic.

[Positioning repeatability]
Repeatability of positioning operations obtained under the same conditions using the same method. The difference between the maximum and minimum values of the result is figured out, then "±" sign is attached to half the difference.

[Resolution]
Minimum travel distance of an axis, which can be set during robot teaching.

[Acceleration/deceleration time (ta)]
The time (seconds) spent until the movable part of the actuator accelerates and reaches its set speed, or the time (seconds) spent until it slows down from its set speed and stops.
This factor is used as a condition for determining the maximum load capacity and tact (or cycle) time.
Normally, this value can be specified in a program.

■ Controller related terms

[Sequential mode]
A mode in which program steps are executed one by one in order.

[Palletizing mode]
A mode in which traveling and loading operations (i.e., palletizing operation) can be executed easily by specifying points to move, the number of points, etc.
The following motions are available.
a. From a given point to another point on a matrix (1 to M)
b. From a point on a matrix to a given point (M to 1)
c. From a point on a matrix to another point on another matrix (M to M)

[Easy mode]
A mode in which designation of points to move, call of hand motion routines after movement (i.e., subroutines) and designation of steps to be executed next can be programmed and executed easily without considering any complex program structures. (A regular motion pattern is simply registered as a mode.)

[External point designation mode]
A mode in which only positioning motions are executed by specifying a PLC (i.e., sequencer) connected to inputs and digital switches, without using normal controller instruction words. Coordinates, speed and acceleration of specified points should be set in the table registered in the controller beforehand.

[Pulse train input mode]
A mode in which a pulse sent from a pulse generator (positioning controller, etc.) is used to locate the axis in real time at a speed as per its frequency and proportional to the number of pulses.
its frequency and proportional to the number of pulses.

[Continuous mode]
A mode in which each step of a program is executed sequentially in either of sequential, easy and palletizing modes every time the START pushbutton switch on the teach pendant is pressed. (Normally used mode)

[Step mode]
A mode in which each single step of program is executed and stopped in either of sequential, easy and palletizing modes every time the START pushbutton switch on the teach pendant is pressed. (Program check mode)

[Manual mode]
A mode in which a program is executed and stopped after axis feed or input/output command is executed in either of sequential, easy and palletizing modes every time the START pushbutton switch on the teach pendant is pressed or the start input is given. (Test run mode, check mode before day's operation)

[Remote teaching]
A method of teaching the robot to move to a desired position by pressing move keys on the teach pendant (remote operation) in the servo ON condition.

[Direct teaching]
A method of directly teaching the robot arm by operator's hand to a desired position and of teaching the robot such a position in the servo OFF condition.

[MDI (Manual data input)]
A method of directly entering desired coordinates through the keyboard (numerical input) according to the display shown on the teach pendant.

Discontinue

Discontinue

Axis Specifications

Discontinue

[How to order]

KBB − 05D − ST − M 12 N − 40

Slider type	Lead	Brake	Stroke
M : Medium slider	06 : 6mm 12 : 12mm	N : Without brake B : With brake	Refer to "Indication in model no." in specifications.

[Specifications]

Motor	50 W AC servo motor (absolute)		
Actuation	Precisely rolled ball screw (equivalent to C7), thread outer diameter 8 mm		
Stroke (mm) (in increments of 50 mm)	Medium slider	50 to 400	450 to 500
	Indication in model no.	05 to 40	45 to 50
Max. speed (mm/s)	Lead 12 mm	800	600
	Lead 6 mm	400	300
Max. load capacity (kg) Acceleration/deceleration time: 0.3 sec or over	Lead 12 mm	Horizontal transfer : 6	Vertical transfer : 3
	Lead 6 mm	Horizontal transfer : 15	Vertical transfer : 4
Positioning repeatability (mm)	±0.02		
Resolution (mm)	0.01		
Allowable static load moment (N·m)	Medium slider MR : 16.0 MP : 6.5 MY : 6.0		
Brake	Braking while not excited, voltage 24VDC		
Master controller	Select from KCA-20-M10, KCA-20-M00		

Notes:
* When using the axis as a vertical axis, select the type with brake.
* The max. load capacity signifies a load exerted on top of the slider. Also refer to the dynamic load moment given in pages 214 to 221.
* The acceleration/deceleration time represents the time until the axis reaches a programmed speed.

Values in ( ) are for the axis with brake.

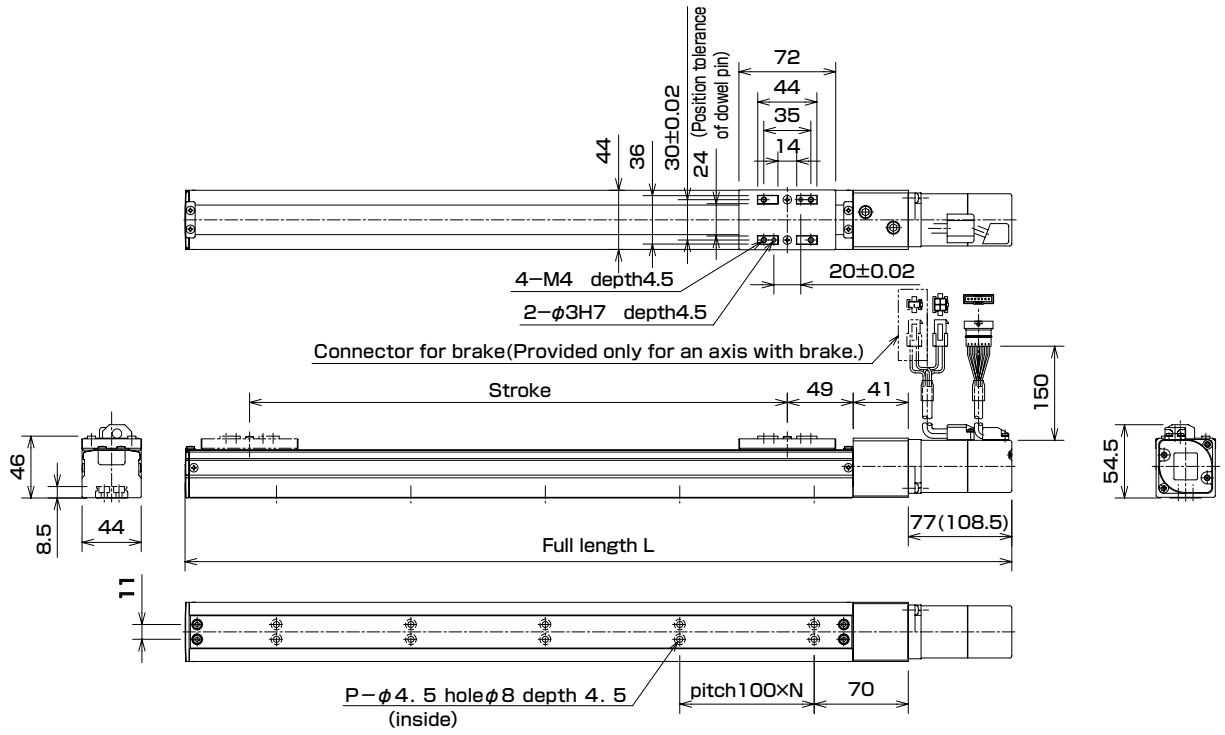

Stroke(mm)	50	100	150	200	250	300	350	400	450	500
Full length L (mm)	265(296.5)	315(346.5)	365(396.5)	415(446.5)	465(496.5)	515(546.5)	565(596.5)	615(646.5)	665(696.5)	715(746.5)
Installation hole quantity(q' ty)	2	4	4	6	6	8	8	10	10	12
Weight(kg)	1.3(1.6)	1.4(1.7)	1.5(1.8)	1.6(1.9)	1.7(2.0)	1.8(2.1)	1.9(2.2)	2.0(2.3)	2.1(2.4)	2.2(2.5)

[How to order]

KBB − 07D − ST − M 12 N − 40

Slider type	Lead	Brake	Stroke
M : Medium slider	06 : 6mm 12 : 12mm	N : Without brake B : With brake	Refer to "Indication in model no." in specifications.

[Specifications]

Motor	50 W AC servo motor (absolute)			
Actuation	Precisely rolled ball screw (equivalent to C7), thread outer diameter 8 mm			
Stroke (mm) (in increments of 50 mm)	Medium slider	50 to 400	450 to 500	550 to 600
	Indication in model no.	05 to 40	45 to 50	55 to 60
Max. speed (mm/s)	Lead 12 mm	800	600	400
	Lead 6 mm	400	300	200
Max. load capacity (kg) Acceleration/deceleration time: 0.3 sec or over	Lead 12 mm	Horizontal transfer: 12 Vertical transfer: 4		
	Lead 6 mm	Horizontal transfer: 30 Vertical transfer: 8		
Positioning repeatability (mm)	±0.02			
Resolution (mm)	0.01			
Allowable static load moment (N·m)	Medium slider MR : 32.2 MP : 8.2 MY : 9.9			
Brake	Braking while not excited, voltage 24VDC			
Master controller	Select from KCA-20-M10, KCA-20-M00			

Notes: * When using the axis as a vertical axis, select the type with brake.
* The max. load capacity signifies a load exerted on top of the slider. Also refer to the dynamic load moment given in pages 214 to 221.
* The acceleration/deceleration time represents the time until the axis reaches a programmed speed.

Values in ( ) are for the axis with brake.

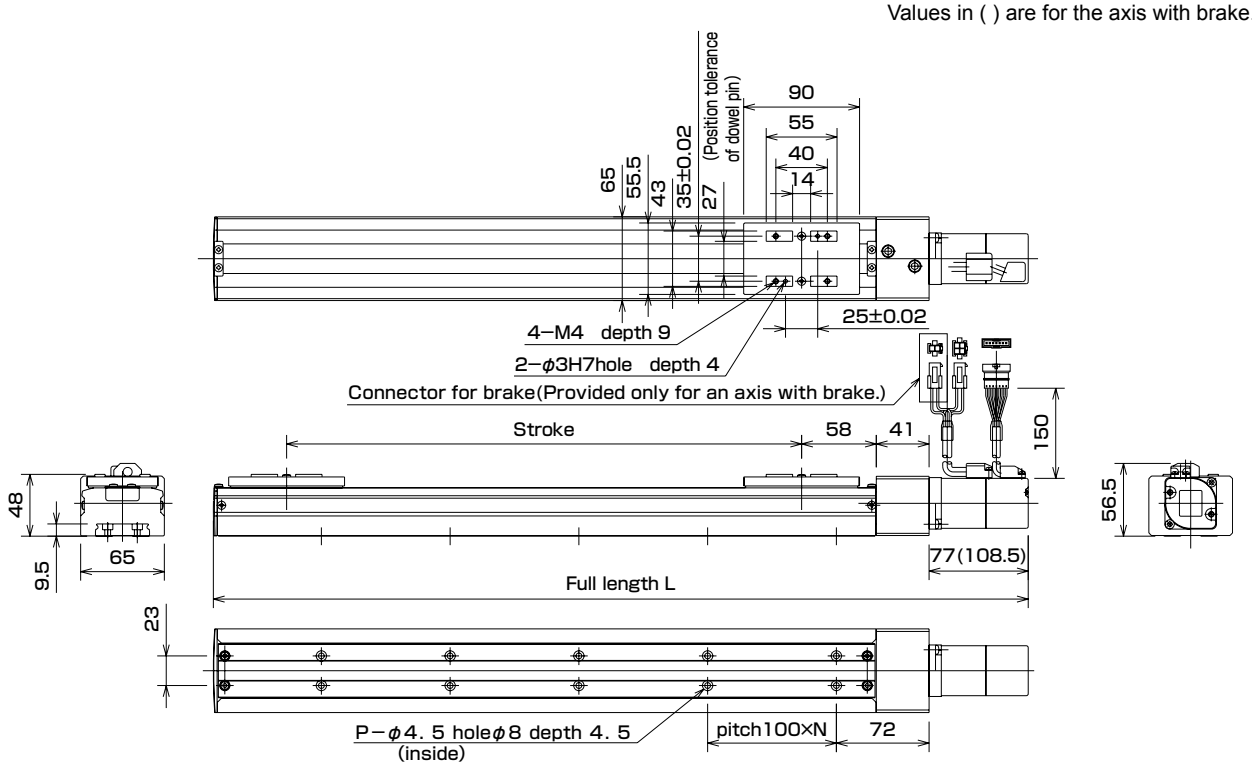

Stroke(mm)	50	100	150	200	250	300	350	400	450	500	550	600
Full length L (mm)	282.9(314.9)	332.9(364.4)	382.9(414.4)	432.9(464.4)	482.9(514.5)	532.9(564.5)	582.9(614.5)	632.9(664.5)	682.9(714.5)	732.9(764.5)	782.9(814.5)	832.9(864.5)
Installation hole quantity(q' ty)	4	4	6	6	8	8	10	10	12	12	14	14
Weight(kg)	1.8(2.1)	2.0(2.3)	2.2(2.5)	2.4(2.7)	2.6(2.9)	2.8(3.1)	3.0(3.3)	3.2(3.5)	3.4(3.7)	3.6(3.9)	3.8(4.1)	4.0(4.3)

Discontinue

[How to order]

KBB − 10E − ST − M 20 N − 40

Axis type	Slider type	Lead	Brake	Stroke
ST : Straight axis UR : Right side mounted motor axis UL : Left side mounted motor axis UU : Bottom side mounted motor axis	S : Short slider M : Medium slider	05 : 5mm 10 : 10mm 20 : 20mm	N : Without brake B : With brake	Refer to "Indication in model no." in specifications.

[Specifications]

Motor	100 W AC servo motor (absolute)				
Actuation	Ground ball screw (C7), thread outer diameter 15 mm				
Stroke (mm) (in increments of 100 mm)	Short slider	150 to 650	750	850	950, 1050
	Indication in model no.	15 to 65	75	85	95, A5
	Medium slider	100 to 600	700	800	900, 1000
	Indication in model no.	10 to 60	70	80	90, A0
Max. speed (mm/s) Values in < > signify the acceleration/deceleration time in seconds when the max. load capacity is loaded.	Lead 20 mm	1200<0.36>	1000<0.3>	800<0.24>	600<0.18>
	Lead 10 mm	600<0.36>	500<0.3>	400<0.24>	300<0.18>
	Lead 5 mm	300<0.36>	250<0.3>	200<0.24>	150<0.18>
Max. load capacity (kg)	Lead 20 mm	Horizontal transfer: 15 Vertical transfer: 3 (5)			
	Lead 10 mm	Horizontal transfer: 30 Vertical transfer: 8 (12)			
	Lead 5 mm	Horizontal transfer: 50 Vertical transfer: 15 (22)			
Positioning repeatability (mm)	±0.01				
Resolution (mm)	0.01				
Allowable static load moment (N·m)	Short slider MR49 MP : 14 MY : 13 Medium slider MR : 59 MP : 59 MY : 54				
Brake	Braking while not excited, voltage 24VDC				
Master controller	Select from KCA-20-M10, KCA-20-M00				

Notes:
* When using the axis as a vertical axis, select the type with brake.
* The max. load capacity signifies a load exerted on top of the slider. Also refer to the dynamic load moment given in pages 214 to 221.
* The values in parentheses under "Max. load capacity" are applicable when a regenerative discharge unit ABSU-2000 is equipped.
* The acceleration/deceleration time represents the time until the axis reaches a programmed speed.

[Dimensions]

KBB-10E-ST

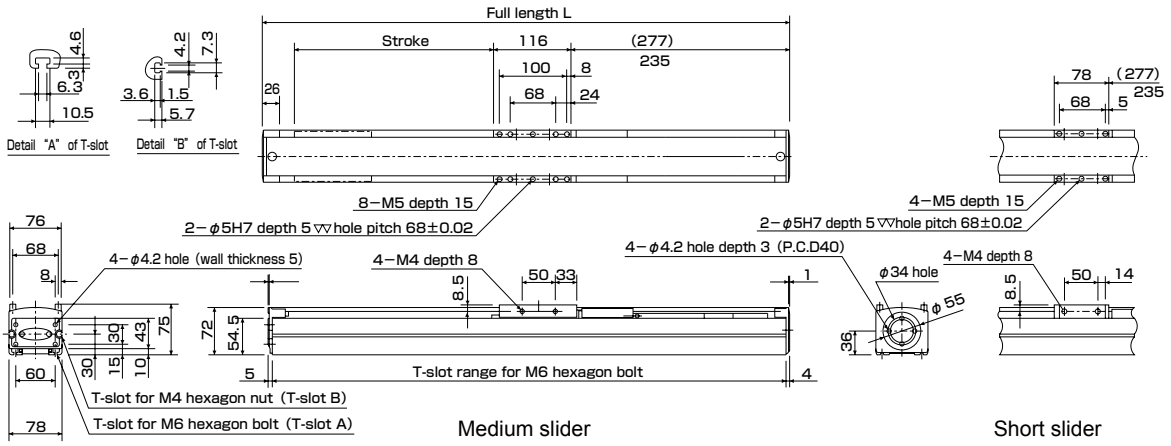

Medium slider

Stroke (mm)	100	200	300	400	500	600	700	800	900	1000
Full length L (mm)	498(540)	598(640)	698(740)	798(840)	898(940)	998(1040)	1098(1140)	1198(1240)	1298(1340)	1398(1440)
Weight (kg)	4.9(5.3)	5.6(6.0)	6.3(6.7)	7.0(7.4)	7.7(8.1)	8.4(8.8)	9.1(9.5)	9.8(10.2)	10.5(10.9)	11.2(11.6)

* Values in parentheses are for the axis with brake.

Short slider

Stroke (mm)	150	250	350	450	550	650	750	850	950	1050
Full length L (mm)	498(540)	598(640)	698(740)	798(840)	898(940)	998(1040)	1098(1140)	1198(1240)	1298(1340)	1398(1440)
Weight (kg)	4.6(5.0)	5.3(5.7)	6.0(6.4)	6.7(7.1)	7.4(7.8)	8.1(8.8)	8.8(9.2)	9.5(9.9)	10.2(10.6)	10.9(11.3)

* Values in parentheses are for the axis with brake.

KBB-10E-UR

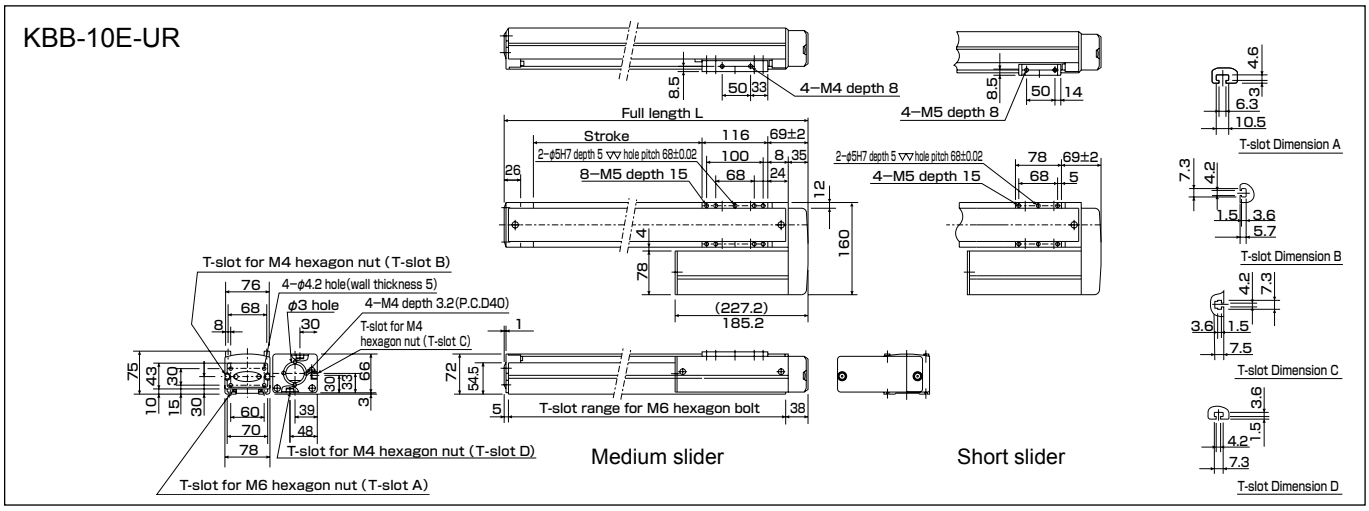

KBB-10E-UL

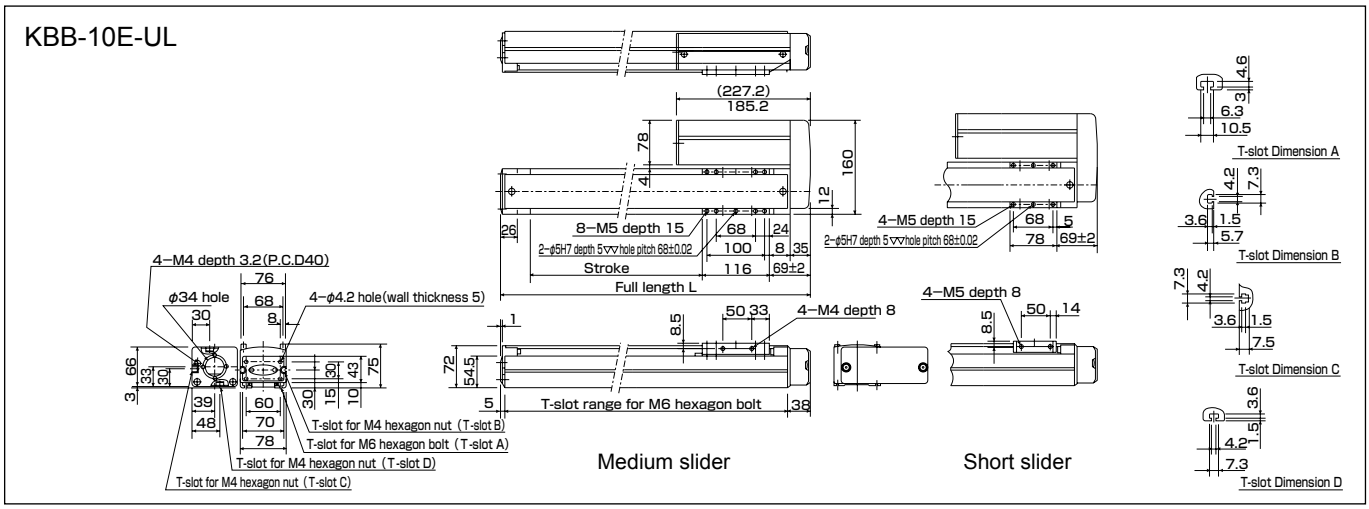

Common to KBB-10E-UR and UL

Medium slider

Stroke (mm)	100	200	300	400	500	600	700	800	900	1000
Full length L (mm)	332	432	532	632	732	832	932	1032	1132	1232
Weight (kg)	5.0(5.4)	5.7(6.1)	6.4(6.8)	7.1(7.5)	7.8(8.2)	8.5(8.9)	9.2(9.6)	9.9(10.3)	10.6(11.0)	11.3(11.7)

Short slider

Stroke (mm)	150	250	350	450	550	650	750	850	950	1050
Full length L (mm)	332	432	532	632	732	832	932	1032	1132	1232
Weight (kg)	4.7(5.1)	5.4(5.8)	6.1(6.5)	6.8(7.2)	7.5(7.9)	8.2(8.6)	8.9(9.3)	9.6(10.0)	10.3(10.7)	11.0(11.4)

* Values in parentheses are for the axis with brake.

KBB-10E-UU

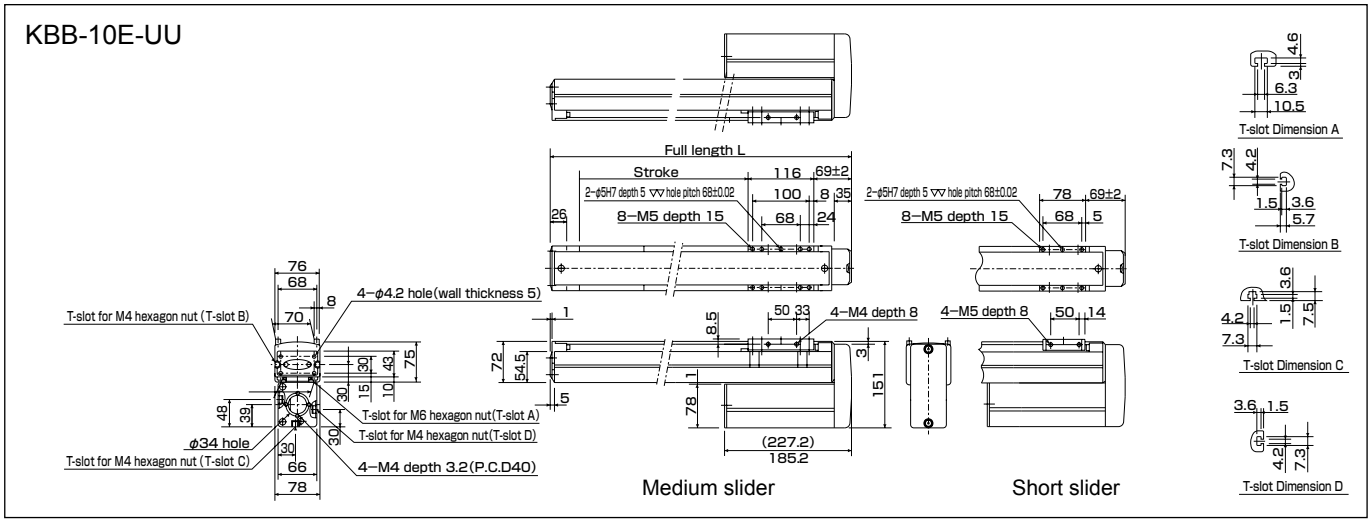

KBB-10E-UU

Medium slider

Stroke (mm)	200	300	400	500	600	700	800	900	1000
Full length L (mm)	432	532	632	732	832	932	1032	1132	1232
Weight (kg)	5.7(6.1)	6.4(6.8)	7.1(7.5)	7.8(8.2)	8.5(8.9)	9.2(9.6)	9.9(10.3)	10.6(11.0)	11.3(11.7)

Short slider

Stroke (mm)	250	350	450	550	650	750	850	950	1050
Full length L (mm)	432	532	632	732	832	932	1032	1132	1232
Weight (kg)	5.4(5.8)	6.1(6.5)	6.8(7.2)	7.5(7.9)	8.2(8.6)	8.9(9.3)	9.6(10.0)	10.3(10.7)	11.0(11.4)

* Values in parentheses are for the axis with brake.

Discontinue

[How to order]

KBB − 30E − ST − M 20 N − 45

Axis type	Slider type	Lead	Brake	Stroke
ST : Straight axis UR : Right side mounted motor axis UL : Left side mounted motor axis UU : Bottom side mounted motor axis	M : Medium slider L : Long slider	05 : 5mm 10 : 10mm 20 : 20mm	N : Without brake B : With brake	Refer to "Indication in model no." in specifications.

[Specifications]

Motor	100 W AC servo motor (absolute)				
Actuation	Ground ball screw (C7), thread outer diameter 15 mm				
Stroke (mm) (in increments of 100 mm) Values in [ ] is for ST (straight)	Medium slider	100 to 600 [150 to 650]	700 [750]	800 [850]	900, 1000 [950, 1050]
	Indication in model no.	10 to 60 [15 to 65]	70 [75]	80 [85]	90, A0 [95, A5]
	Long slider	150 to 550 [150 to 650]	650 [750]	750 [850]	850, 950 [950, 1050]
	Indication in model no.	15 to 55 [15 to 65]	65 [75]	75 [85]	85, 95 [95, A5]
Max. speed (mm/s) Values in < > signify the acceleration/deceleration time in seconds when the max. load capacity is loaded.	Lead 20 mm	1200<0.36>	1000<0.3>	800<0.24>	600<0.18>
	Lead 10 mm	600<0.36>	500<0.3>	400<0.24>	300<0.18>
	Lead 5 mm	300<0.36>	250<0.3>	200<0.24>	150<0.18>
Max. load capacity (kg)	Lead 20 mm	Horizontal transfer: 20 Vertical transfer: 3 (5)			
	Lead 10 mm	Horizontal transfer: 50 Vertical transfer: 8 (12)			
	Lead 5 mm	Horizontal transfer: 50 Vertical transfer: 15 (22)			
Positioning repeatability (mm)	±0.01				
Resolution (mm)	0.01				
Allowable static load moment (N·m)	Medium slider MR : 510 MP : 430 MY : 370 Long slider MR : 510 MP : 750 MY : 650				
Brake	Braking while not excited, voltage 24VDC				
Master controller	Select from KCA-20-M10, KCA-20-M00				

Notes:
* When using the axis as a vertical axis, select the type with brake.
* The max. load capacity signifies a load exerted on top of the slider. Also refer to the dynamic load moment given in pages 214 to 221.
* The values in parentheses under "Max. load capacity" are applicable when a regenerative discharge unit ABSU-2000 is equipped.
* The acceleration/deceleration time represents the time until the axis reaches a programmed speed.

[Dimensions]

KBB-30E-ST

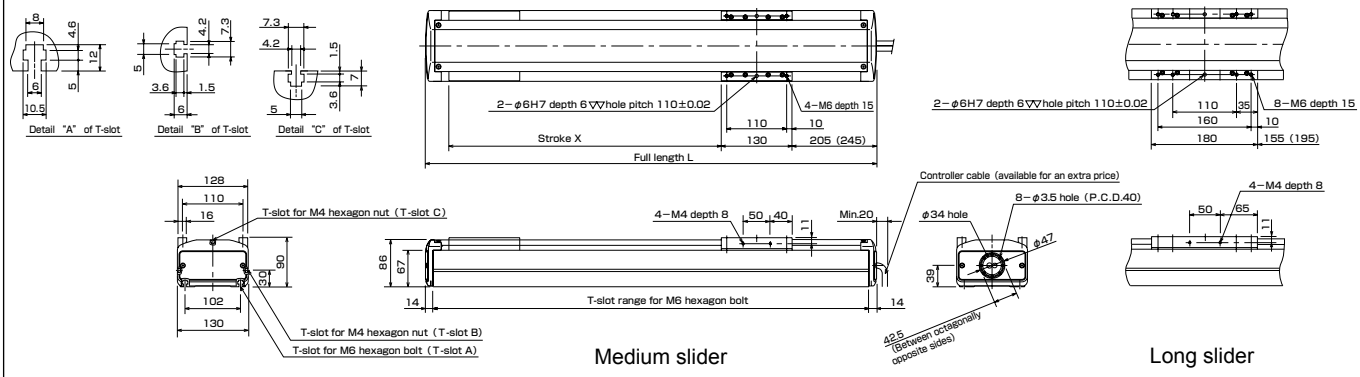

Medium slider

Stroke (mm)	150	250	350	450	550	650	750	850	950	1050
Full length L (mm)	528(568)	628(668)	728(768)	828(868)	928(968)	1028(1068)	1128(1168)	1228(1268)	1328(1368)	1428(1468)
Weight (kg)	8.3(8.9)	9.5(10.1)	10.7(11.3)	11.9(12.5)	13.1(13.7)	14.3(14.9)	15.5(16.1)	16.7(17.3)	17.9(18.5)	19.1(19.7)

Long slider

Stroke (mm)	150	250	350	450	550	650	750	850	950	1050
Full length L (mm)	528(568)	628(668)	728(768)	828(868)	928(968)	1028(1068)	1128(1168)	1228(1268)	1328(1368)	1428(1468)
Weight (kg)	8.6(9.2)	9.8(10.4)	11.0(11.6)	12.2(12.8)	13.4(14.0)	14.6(15.2)	15.8(16.4)	17.0(17.6)	18.2(18.8)	19.4(20.0)

* Values in parentheses are for the axis with brake.

KBB-30E-UR

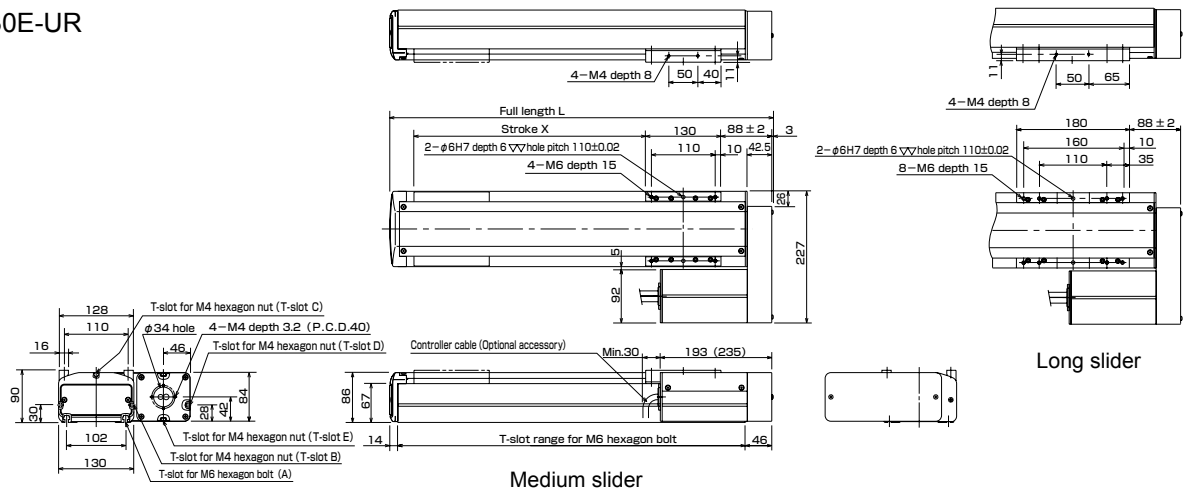

KBB-30E-UL

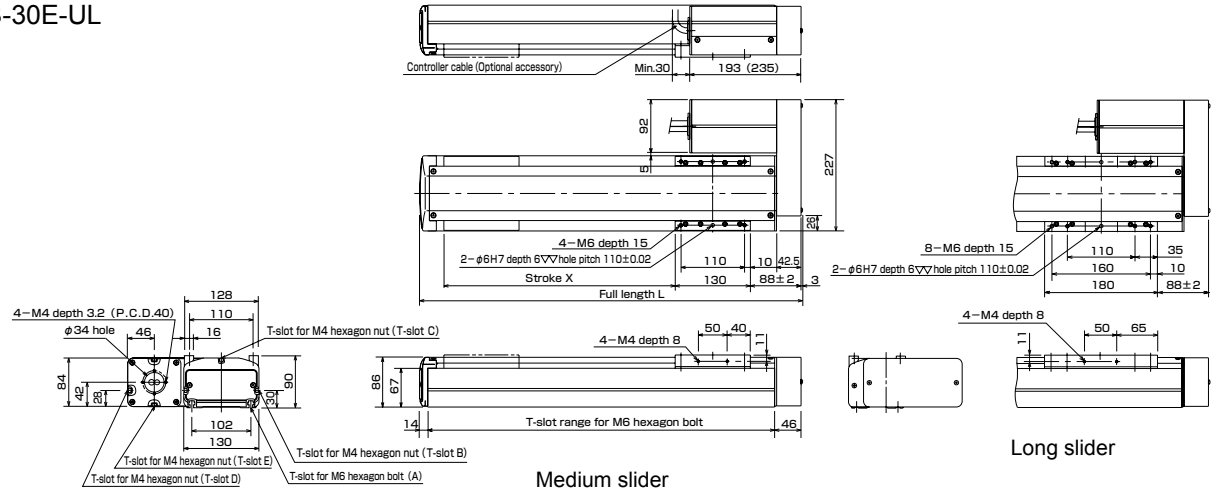

KBB-30E-UU

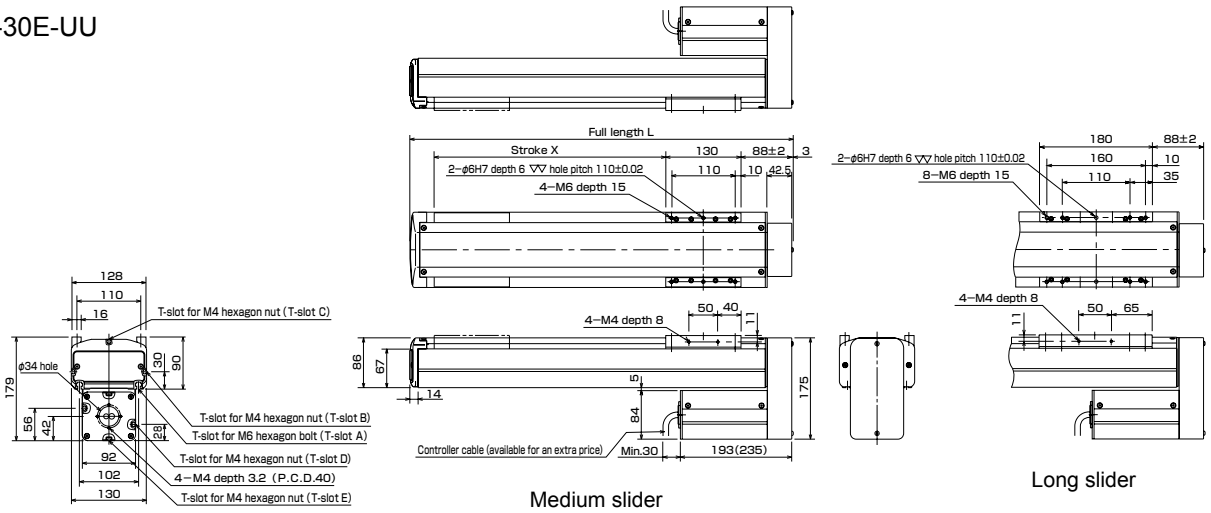

Common to KBB-30E-UR, UL and UU.

T-slot

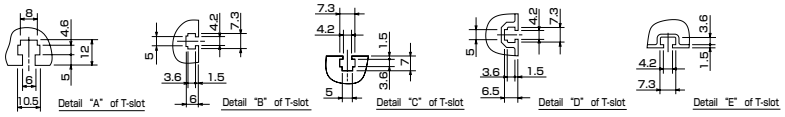

Medium slider

Common to KBB-30E-UR, UL and UU.

Stroke (mm)	100	200	300	400	500	600	700	800	900	1000
Full length L (mm)	363	463	563	663	763	863	963	1063	1163	1263
Weight (kg)	7.8(8.2)	9.0(9.4)	10.2(10.6)	11.4(11.8)	12.6(13.0)	13.8(14.2)	15.0(15.4)	16.2(16.6)	17.4(17.8)	18.6(19.0)

Long slider

Common to KBB-30E-UR, UL and UU.

Stroke (mm)	150	250	350	450	550	650	750	850	950
Full length L (mm)	463	563	663	763	863	963	1063	1163	1263
Weight (kg)	9.3(9.7)	10.5(10.9)	11.7(12.1)	12.9(13.3)	14.1(14.5)	15.3(15.7)	16.5(16.9)	17.7(18.1)	18.9(19.3)

* Values in parentheses are for the axis with brake.

Discontinue

[How to order]

KBB − 30F − ST − M 20 N − 40

Axis type	Slider type	Lead	Brake	Stroke
ST : Straight axis UR : Right side mounted motor axis UL : Left side mounted motor axis UU : Bottom side mounted motor axis	M : Medium slider L : Long slider	05 : 5mm 10 : 10mm 20 : 20mm	N : Without brake B : With brake	Refer to "Indication in model no." in specifications.

[Specifications]

Motor	200 W AC servo motor (absolute)				
Actuation	Ground ball screw (C7), thread outer diameter 15 mm				
Stroke (mm) (in increments of 100 mm)	Medium slider	100 to 600	700	800	900, 1000
	Indication in model no.	10 to 60	70	80	90, A0
	Long slider	150 to 550	650	750	850, 950
	Indication in model no.	15 to 55	65	75	85, 95
Max. speed (mm/s) Values in < > signify the acceleration/deceleration time in seconds when the max. load capacity is loaded.	Lead 20 mm	1200<0.36>	1000<0.3>	800<0.24>	600<0.18>
	Lead 10 mm	600<0.36>	500<0.3>	400<0.24>	300<0.18>
	Lead 5 mm	300<0.36>	250<0.3>	200<0.24>	150<0.18>
Max. load capacity (kg)	Lead 20 mm	Horizontal transfer: 40	Vertical transfer: 3 (10)		
	Lead 10 mm	Horizontal transfer: 80	Vertical transfer: 8 (20)		
	Lead 5 mm	Horizontal transfer: 80	Vertical transfer: 15 (40)		
Positioning repeatability (mm)	±0.01				
Resolution (mm)	0.01				
Allowable static load moment (N·m)	Medium slider MR : 510 MP : 430 MY : 370 Long slider MR : 510 MP : 750 MY : 650				
Brake	Braking while not excited, voltage 24VDC				
Master controller	Select from KCA-20-M10, KCA-20-M00				

Notes:
* When using the axis as a vertical axis, select the type with brake.
* The max. load capacity signifies a load exerted on top of the slider. Also refer to the dynamic load moment given in pages 214 to 221.
* The values in parentheses under "Max. load capacity" are applicable when a regenerative discharge unit ABSU-2000 is equipped.
* The acceleration/deceleration time represents the time until the axis reaches a programmed speed.

[Dimensions]

KBB-30F-ST

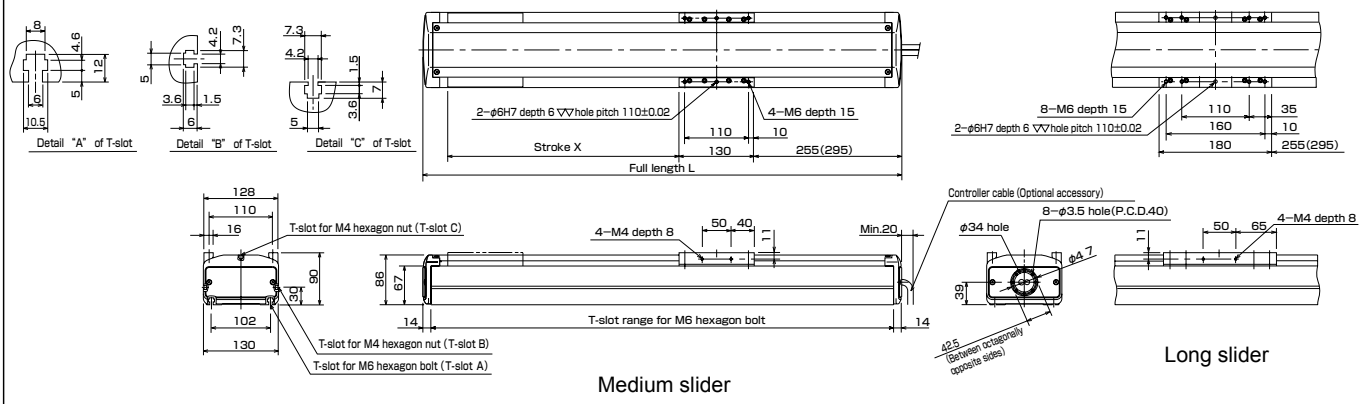

Medium slider

Stroke (mm)	100	200	300	400	500	600	700	800	900	1000
Full length L (mm)	528(568)	628(668)	728(768)	828(868)	928(968)	1028(1068)	1128(1168)	1228(1268)	1328(1368)	1428(1468)
Weight (kg)	9.6(10.2)	10.8(11.4)	12.0(12.6)	13.2(13.8)	14.4(15.0)	15.6(16.2)	16.8(17.4)	18.0(18.6)	19.2(19.8)	20.4(21.0)

Long slider

Stroke (mm)	150	250	350	450	550	650	750	850	950
Full length L (mm)	628(668)	728(768)	828(868)	928(968)	1028(1068)	1128(1168)	1228(1268)	1328(1368)	1428(1468)
Weight (kg)	9.8(10.4)	11.0(11.6)	12.2(12.8)	13.4(14.0)	14.6(15.2)	15.8(16.4)	17.0(17.6)	18.2(18.8)	19.4(20.0)

* Values in parentheses are for the axis with brake.

KBB-30F-UR

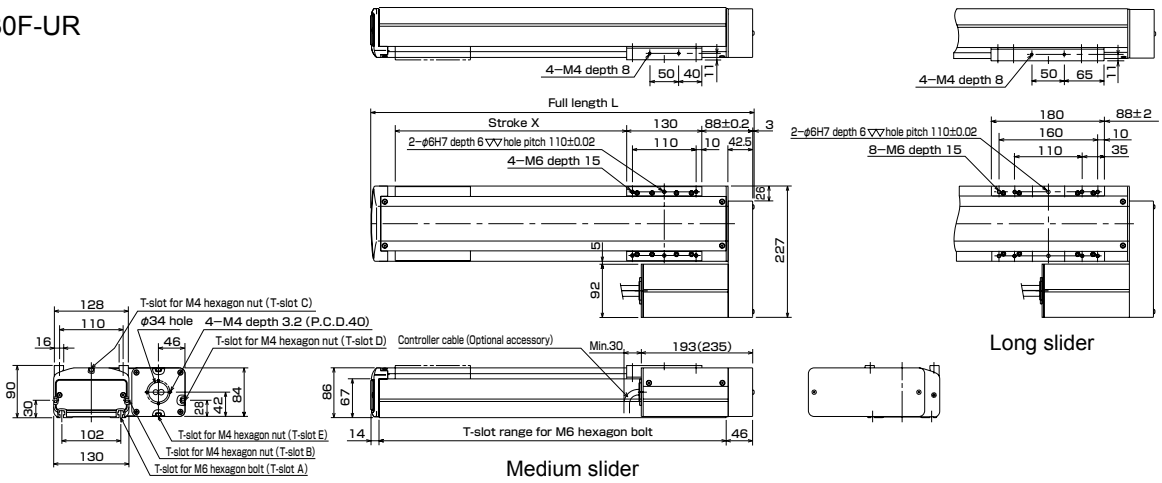

Long slider

Medium slider

KBB-30F-UL

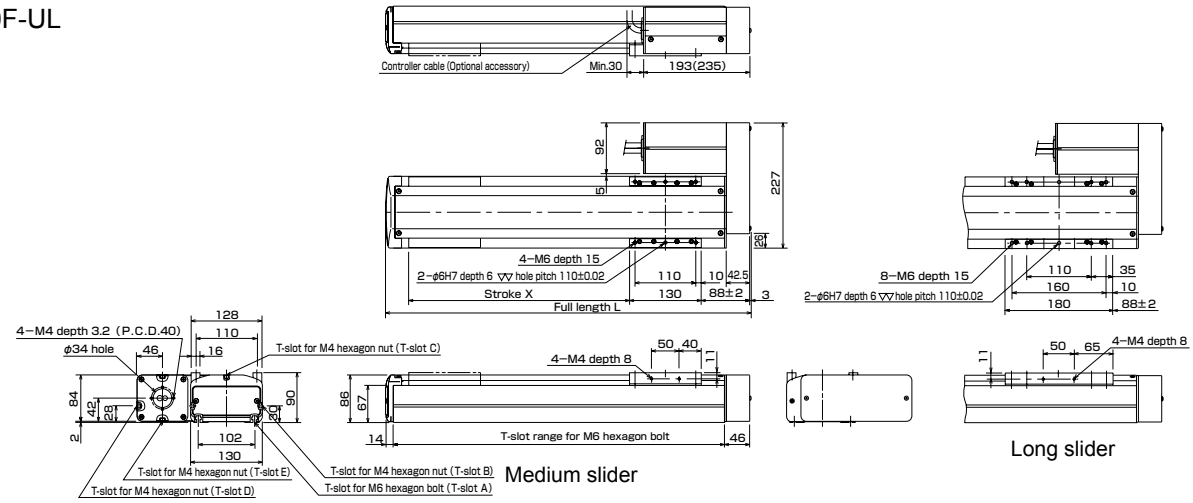

Long slider

Medium slider

KBB-30F-UU

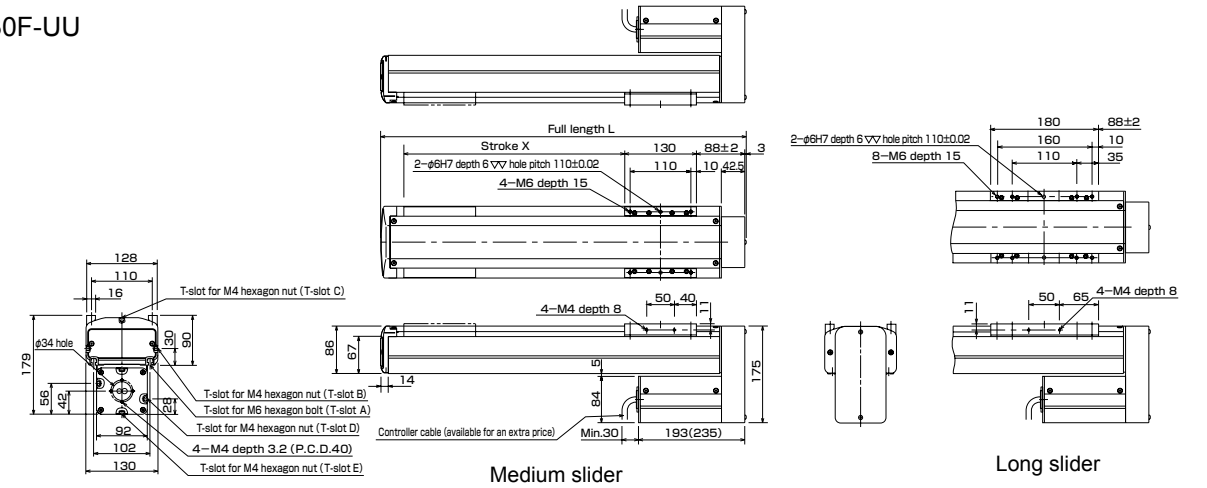

Long slider

Medium slider

Common to KBB-30F-UR, UL and UU.

T-slot

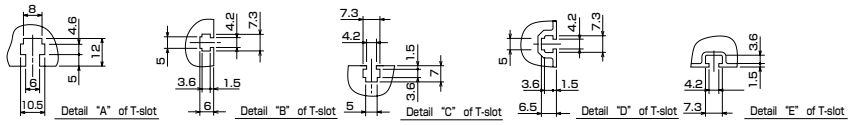

Medium slider

Common to KBB-30F-UR, UL and UU.

Stroke (mm)	100	200	300	400	500	600	700	800	900	1000
Full length L (mm)	363	463	563	663	763	863	963	1063	1163	1263
Weight (kg)	8.5(9.1)	9.7(10.3)	10.9(11.5)	12.1(12.7)	13.3(13.9)	14.5(15.1)	15.7(16.3)	16.9(17.5)	18.1(18.7)	19.3(19.9)

Long slider

Common to KBB-30F-UR, UL and UU.

Stroke (mm)	150	250	350	450	550	650	750	850	950
Full length L (mm)	463	563	663	763	863	963	1063	1163	1263
Weight (kg)	10.0(10.6)	11.2(11.8)	12.4(13.0)	13.6(14.2)	14.8(15.4)	16.0(16.6)	17.2(17.8)	18.4(19.0)	19.6(20.2)

* Values in parentheses are for the axis with brake.

Discontinue

[How to order]

KBB − 50F − ST − M 20 N − 40

Axis type	Slider type	Lead	Brake	Stroke
ST : Straight axis UR : Right side mounted motor axis UL : Left side mounted motor axis UU : Bottom side mounted motor axis	M : Medium slider L : Long slider	05 : 5mm 10 : 10mm 20 : 20mm	N : Without brake B : With brake	Refer to "Indication in model no." in specifications.

[Specifications]

Motor	200 W AC servo motor (absolute)							
Actuation	Ground ball screw (C7), thread outer diameter 20 mm							
Stroke (mm) (in increments of 100 mm)	Medium slider	200 to 600	700, 800	900, 1000	1100, 1200	1300	1400	1500
	Indication in model no.	20 to 60	70, 80	90, A0	B0, C0	D0	E0	F0
	Long slider	250 to 550	650, 750	850, 950	1050, 1150	1250	1350	1450
	Indication in model no.	25 to 55	65, 75	85, 95	A5, B5	C5	D5	E5
Max. speed (mm/s) Values in < > signify the acceleration/deceleration time in seconds when the max. load capacity is loaded.	Lead 20 mm	1200<0.36>	1100<0.33>	1000<0.3>	700<0.21>	500<0.15>	400<0.12>	300<0.1>
	Lead 10 mm	600<0.36>	550<0.33>	500<0.3>	350<0.21>	250<0.15>	200<0.12>	150<0.1>
	Lead 5 mm	300<0.36>	280<0.33>	250<0.3>	180<0.21>	130<0.15>	100<0.12>	80<0.1>
Max. load capacity (kg)	Lead 20 mm	Horizontal transfer: 60 (Note 1) Vertical transfer: 3 (12) (Note 2)						
	Lead 10 mm	Horizontal transfer: 100 Vertical transfer: 8 (25)						
	Lead 5 mm	Horizontal transfer: 100 Vertical transfer: 15 (50)						
Positioning repeatability (mm)	±0.01							
Resolution (mm)	0.01							
Allowable static load moment (N·m)	Medium slider MR : 2080 MP : 2160 MY : 1820 Long slider MR : 2080 MP : 3150 MY : 2640							
Brake	Braking while not excited, voltage 24VDC							
Master controller	Select from KCA-20-M10, KCA-20-M00							

Notes:
* When using the axis as a vertical axis, select the type with brake.
* The max. load capacity signifies a load exerted on top of the slider. Also refer to the dynamic load moment given in pages 214 to 221.
* The values in parentheses under "Max. load capacity" are applicable when a regenerative discharge unit ABSU-2000 is equipped.
* The acceleration/deceleration time represents the time until the axis reaches a programmed speed.

Note 1: When master power voltage is 110 to 120 V or 220 V to 240 V with load capacity larger than 50 kg, a regenerative discharge unit (ABSU-2000) is required. When the axis speed exceeds 1,000 mm/s, allowable load capacity is 50 kg.

Note 2: When the axis speed exceeds 1,000 mm/s and a regenerative discharge unit is used, allowable load capacity is 7 kg.

[Dimensions]

KBB-50F-ST

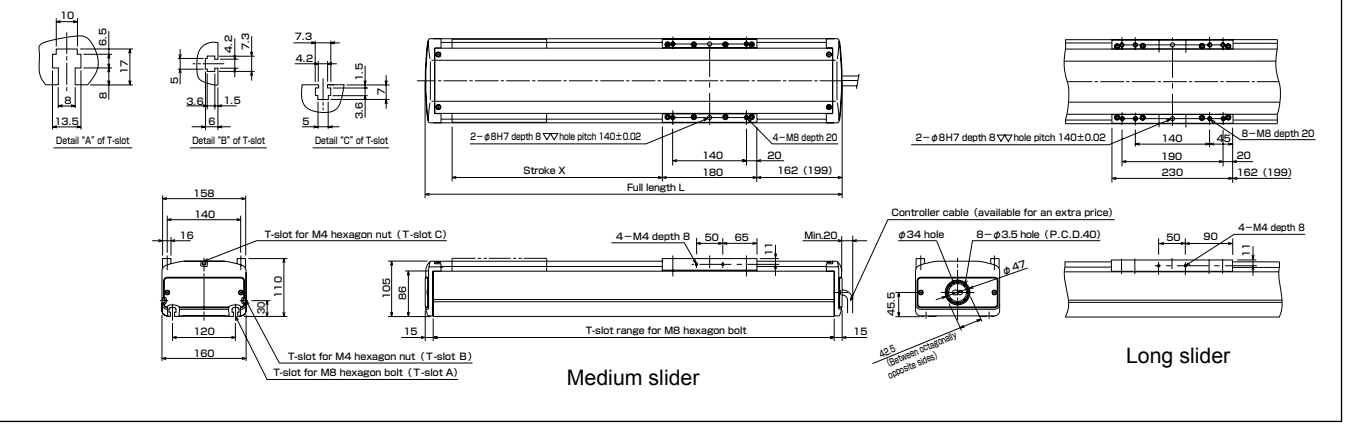

Medium slider

Stroke (mm)	200	300	400	500	600	700	800	900	1000	1100	1200	1300	1400	1500
Full length L (mm)	593(630)	693(730)	793(830)	893(930)	993(1030)	1093(1130)	1193(1230)	1293(1330)	1393(1430)	1493(1530)	1593(1630)	1693(1730)	1793(1830)	1893(1930)
Weight (kg)	16.1(16.9)	18.0(18.8)	19.9(20.7)	21.8(22.6)	23.7(24.5)	25.6(26.4)	27.5(28.3)	29.4(30.2)	31.3(32.1)	33.2(34.0)	35.1(35.9)	37.0(37.8)	38.9(39.7)	40.8(41.6)

* Values in parentheses are for the axis with brake.

Long slider

Stroke (mm)	250	350	450	550	650	750	850	950	1050	1150	1250	1350	1450
Full length L (mm)	693(730)	793(830)	893(930)	993(1030)	1093(1130)	1193(1230)	1293(1330)	1393(1430)	1493(1530)	1593(1630)	1693(1730)	1793(1830)	1893(1930)
Weight (kg)	18.6(19.4)	20.5(21.3)	22.4(23.2)	24.3(25.1)	26.2(27.0)	28.1(28.9)	30.0(30.8)	31.9(32.7)	33.8(34.6)	35.7(36.5)	37.6(38.4)	39.5(40.3)	41.4(42.2)

* Values in parentheses are for the axis with brake.

KBB-50F-UR

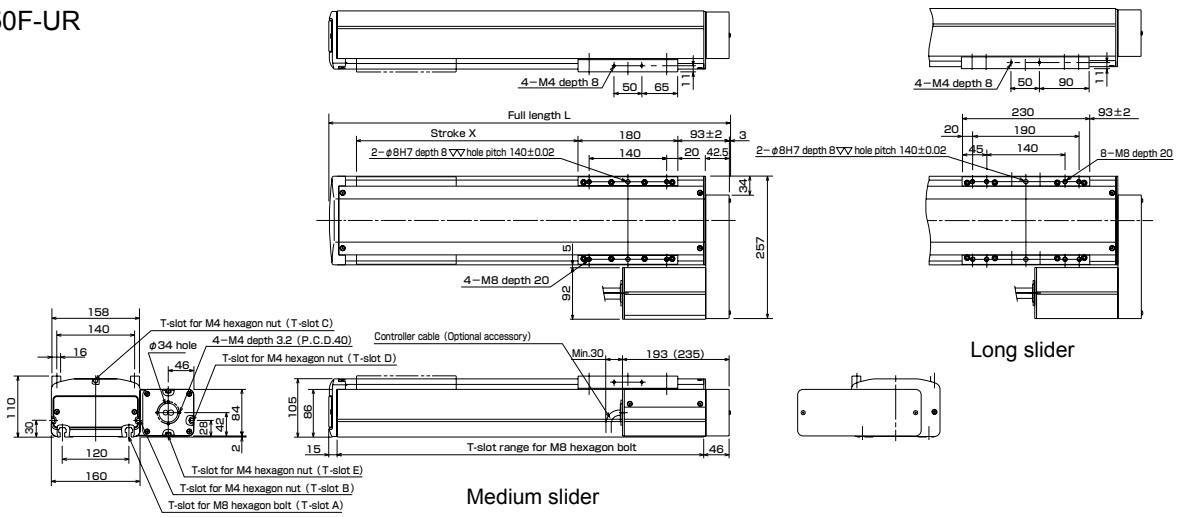

Long slider

Medium slider

KBB-50F-UL

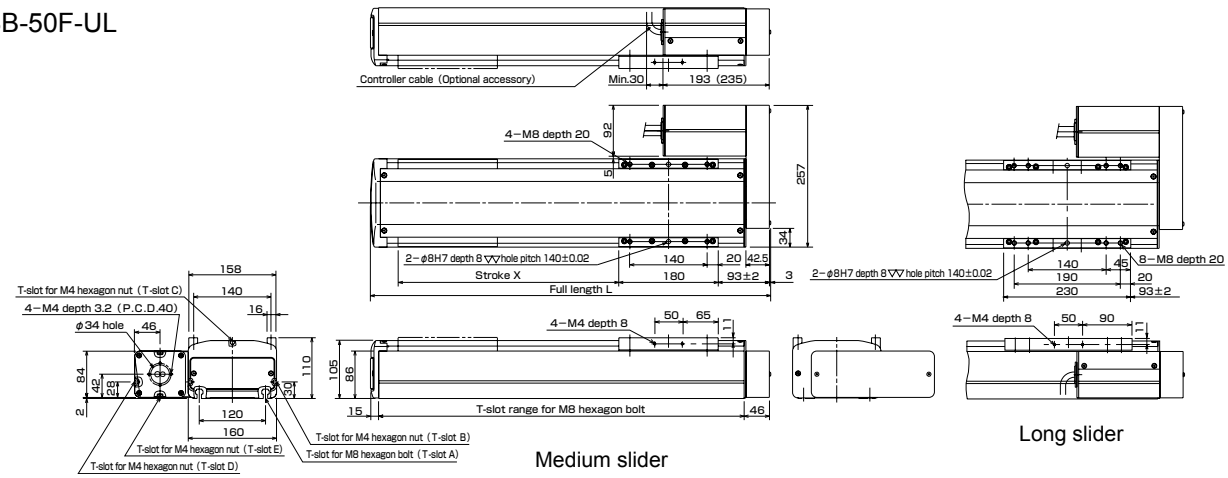

Long slider

Medium slider

KBB-50F-UU

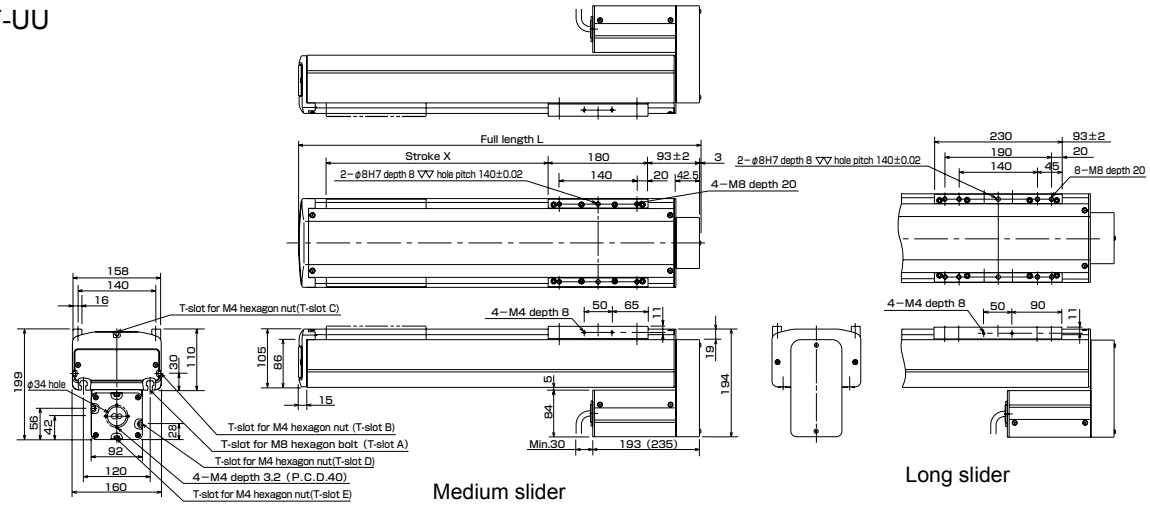

Long slider

Medium slider

Common to KBB-50F-UR, UL and UU.

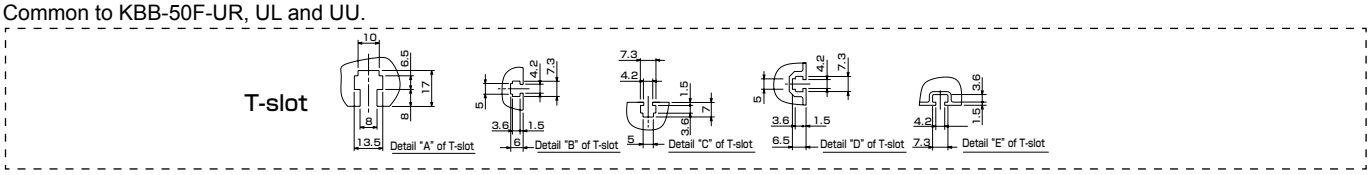

Medium slider Common to KBB-50F-UR, UL and UU.and UU.

Stroke (mm)	200	300	400	500	600	700	800	900	1000	1100	1200	1300	1400	1500
Full length L (mm)	526	626	726	826	926	1026	1126	1226	1326	1426	1526	1626	1726	1826
Weight (kg)	12.5(13.1)	14.4(15.0)	16.3(16.9)	18.2(18.8)	20.1(20.7)	22.0(22.6)	23.9(24.5)	25.8(26.4)	27.7(28.3)	29.6(30.2)	31.5(32.1)	33.4(34.0)	35.3(35.9)	37.2(37.8)

* Values in parentheses are for the axis with brake.

Long slider Common to KBB-50F-UR, UL and UU.and UU.

Stroke (mm)	250	350	450	550	650	750	850	950	1050	1150	1250	1350	1450
Full length L (mm)	626	726	826	926	1026	1126	1226	1326	1426	1526	1626	1726	1826
Weight (kg)	15.0(15.6)	16.9(17.5)	18.8(19.4)	20.7(21.3)	22.6(23.2)	24.5(25.1)	26.4(27.0)	28.3(28.9)	30.2(30.8)	32.1(32.7)	34.0(34.6)	35.9(36.5)	37.8(38.4)

* Values in parentheses are for the axis with brake.

Discontinue

[How to order]

KBB − 50G − ST − M 20 N − 40

Axis type	Slider type	Lead	Brake	Stroke
ST : Straight axis UR : Right side mounted motor axis UL : Left side mounted motor axis UU : Bottom side mounted motor axis	M : Medium slider L : Long slider	05 : 5mm 10 : 10mm 20 : 20mm	N : Without brake B : With brake	Refer to "Indication in model no." in specifications.

[Specifications]

Motor	400 W AC servo motor (absolute)							
Actuation	Ground ball screw (C7), thread outer diameter 20 mm							
Stroke (mm) (in increments of 100 mm)	Medium slider	200 to 600	700, 800	900, 1000	1100, 1200	1300	1400	1500
	Indication in model no.	20 to 60	70, 80	90, A0	B0, C0	D0	E0	F0
	Long slider	250 to 550	650, 750	850, 950	1050, 1150	1250	1350	1450
	Indication in model no.	25 to 55	65, 75	85, A95	A5, B5	C5	D5	E5
Max. speed (mm/s) Values in < > signify the acceleration/deceleration time in seconds when the max. load capacity is loaded.	Lead 20 mm	1200<0.36>	1100<0.33>	1000<0.3>	700<0.21>	500<0.15>	400<0.12>	300<0.1>
	Lead 10 mm	600<0.36>	550<0.33>	500<0.3>	350<0.21>	250<0.15>	200<0.12>	150<0.1>
	Lead 5 mm	300<0.36>	280<0.33>	250<0.3>	180<0.21>	130<0.15>	100<0.12>	80<0.1>
Max. load capacity (kg)	Lead 20 mm	Horizontal transfer: 100 Vertical transfer: 25						
	Lead 10 mm	Horizontal transfer: 150 Vertical transfer: 50						
	Lead 5 mm	Horizontal transfer: 150 Vertical transfer: 60						
Positioning repeatability (mm)	±0.01							
Resolution (mm)	0.01							
Allowable static load moment (N·m)	Medium slider MR : 2080 MP : 2160 MY : 1820 Long slider MR : 2080 MP : 3150 MY : 2640							
Brake	Braking while not excited, voltage 24VDC							
Master controller	Select from KCA-20-M40, KCA-20-M00							

Notes:
* When using the axis as a vertical axis, select the type with brake.
* The max. load capacity signifies a load exerted on top of the slider. Also refer to the dynamic load moment given in pages 214 to 221.
* The values in parentheses under "Max. load capacity" are applicable when a regenerative discharge unit ABSU-4000 is equipped.
* The acceleration/deceleration time represents the time until the axis reaches a programmed speed.

[Dimensions]

KBB-50G-ST

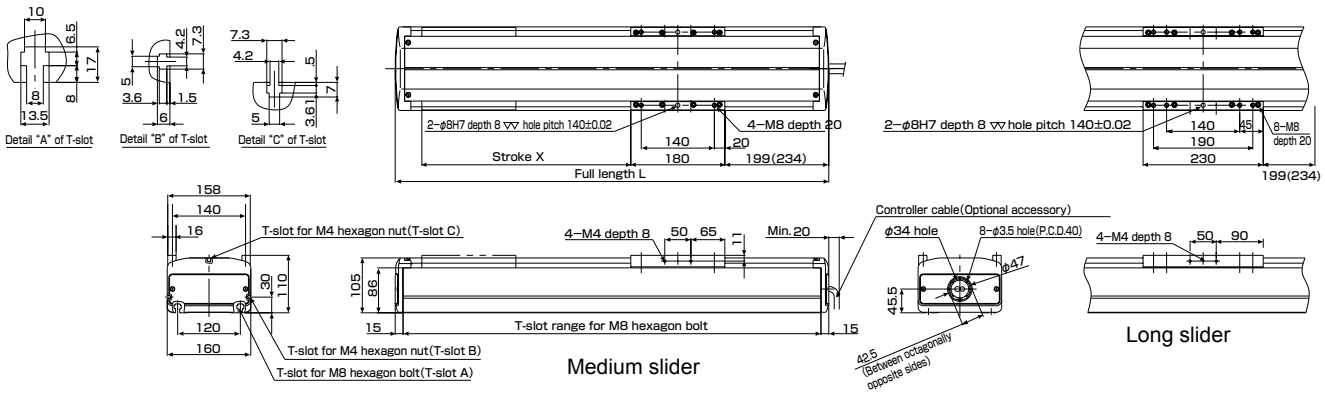

Medium slider

Stroke (mm)	200	300	400	500	600	700	800	900	1000	1100	1200	1300	1400	1500
Full length L (mm)	630(665)	730(765)	830(865)	930(965)	1030(1065)	1130(1165)	1230(1265)	1330(1365)	1430(1465)	1530(1565)	1630(1665)	1730(1765)	1830(1865)	1930(1965)
Weight (kg)	17.1(18.0)	19.0(19.9)	20.9(21.8)	22.8(23.7)	24.7(25.6)	26.6(27.5)	28.5(29.4)	30.4(31.3)	32.3(33.2)	34.2(35.1)	36.1(37.0)	38.0(38.9)	39.9(40.8)	41.8(42.7)

* Values in parentheses are for the axis with brake.

Long slider

Stroke (mm)	250	350	450	550	650	750	850	950	1050	1150	1250	1350	1450
Full length L (mm)	730(765)	830(865)	930(965)	1030(1065)	1130(1165)	1230(1265)	1330(1365)	1430(1465)	1530(1565)	1630(1665)	1730(1765)	1830(1865)	1930(1965)
Weight (kg)	19.6(20.5)	21.5(22.4)	23.4(24.3)	25.3(26.2)	27.2(28.1)	29.1(30.0)	31.0(31.9)	32.9(33.8)	34.8(35.7)	36.7(37.6)	38.6(39.5)	40.5(41.4)	42.4(43.3)

* Values in parentheses are for the axis with brake.

KBB-50G-UR

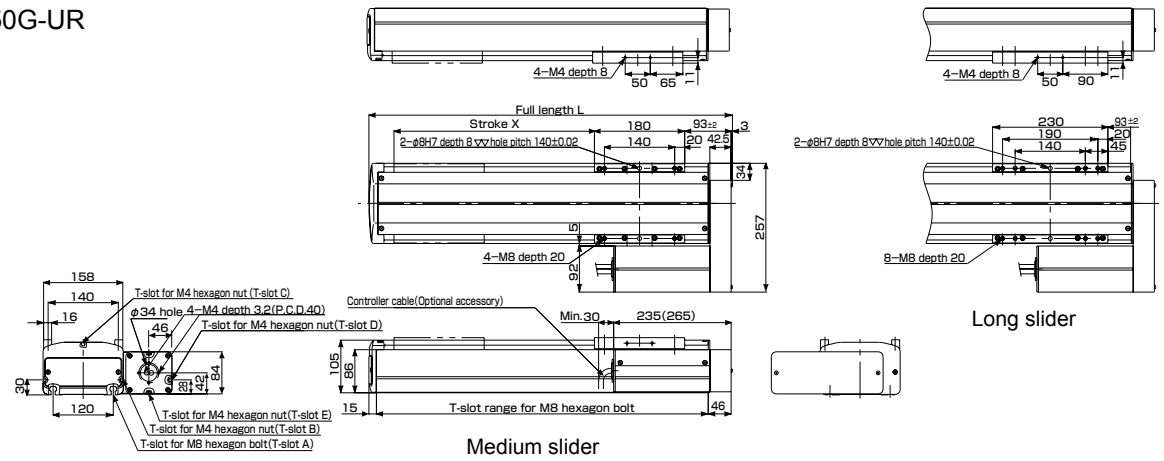

KBB-50G-UL

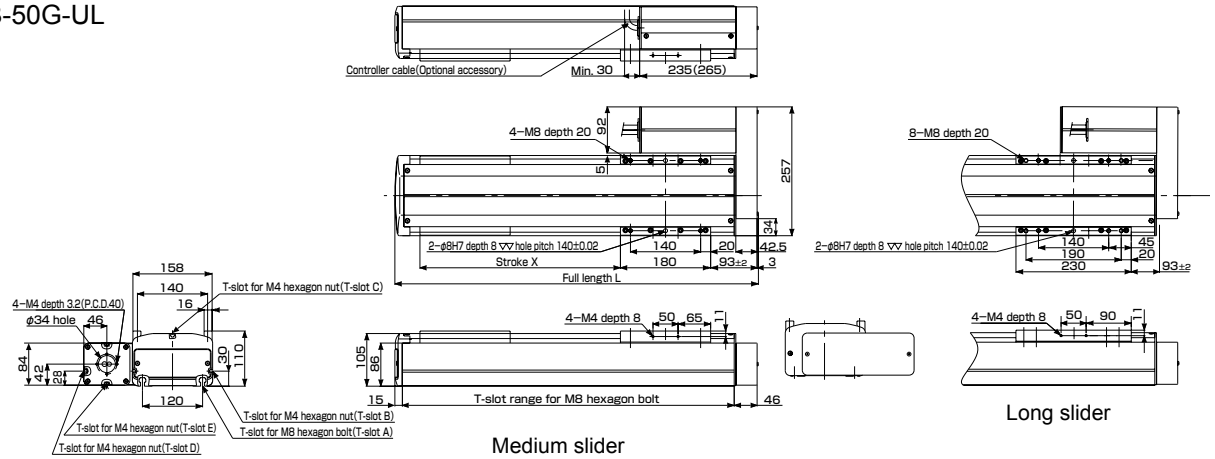

KBB-50G-UU

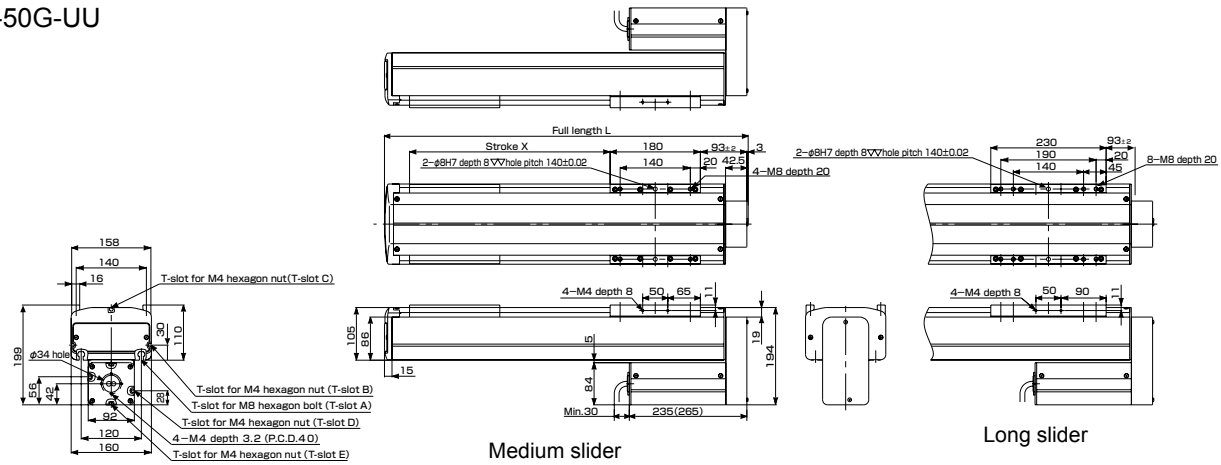

Common to KBB-50G-UR, UL and UU.

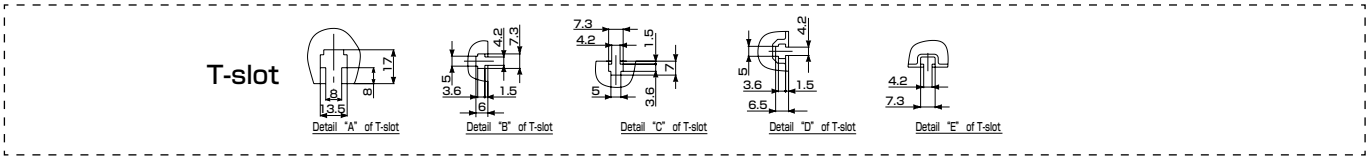

Medium slider Common to KBB-50G-UR, UL and UU.

Stroke (mm)	200	300	400	500	600	700	800	900	1000	1100	1200	1300	1400	1500
Full length L (mm)	526	626	726	826	926	1026	1126	1226	1326	1426	1526	1626	1726	1826
Weight (kg)	12.5(13.1)	14.4(15.0)	16.3(16.9)	18.2(18.8)	20.1(20.7)	22.0(22.6)	23.9(24.5)	25.8(26.4)	27.7(28.3)	29.6(30.2)	31.5(32.1)	33.4(34.0)	35.3(35.9)	37.2(37.8)

* Values in parentheses are for the axis with brake.

Long slider Common to KBB-50G-UR, UL and UU.

Stroke (mm)	250	350	450	550	650	750	850	950	1050	1150	1250	1350	1450
Full length L (mm)	626	726	826	926	1026	1126	1226	1326	1426	1526	1626	1726	1826
Weight (kg)	15.0(15.6)	16.9(17.5)	18.8(19.4)	20.7(21.1)	22.6(23.2)	24.5(25.1)	26.4(27.0)	28.3(28.9)	30.2(30.8)	32.1(32.7)	34.0(34.6)	35.9(36.5)	37.8(38.4)

* Values in parentheses are for the axis with brake.

MEMO

MEMO

Discontinue

[How to order]

KBB − 10E − BT − M 21 N − 40

Motor set direction	Slider type	Lead	Brake	Stroke
BT : Facing up BR : Facing right BL : Facing left BU : Facing down	S : Short slider M : Medium slider	21 : 21mm	N : Without brake	Refer to "Indication in model no." in specifications.

[Specifications]

Motor	100 W AC servo motor (absolute)										
Actuation	Timing belt										
Ball screw lead (mm)	21										
Stroke (mm) (in increments of 100 mm)	Short slider	150 to 950	1050	1150	1250	1350	1450	1550	1650	1750	1850
	Indication in model no.	15 to 95	A5	B5	C5	D5	E5	F5	G5	H5	J5
	Medium slider	100 to 900	1000	1100	1200	1300	1400	1500	1600	1700	1800
	Indication in model no.	10 to 90	A0	B0	C0	D0	E0	F0	G0	H0	J0
Max. speed (mm/s)	1000										
Max. load capacity (kg) Acceleration/deceleration time: 0.3 sec or over	Horizontal transfer: 15										
Positioning repeatability (mm)	±0.05										
Resolution (mm)	0.01										
Allowable static load moment (N·m)	Short slider MR : 49 MP : 14 MY : 13 Medium slider MR : 59 MP : 59 MY : 54										
Master controller	Select from KCA-20-M10, KCA-20-M00										

Notes: * The max. load capacity signifies a load exerted on top of the slider. Also refer to the dynamic load moment given in pages 214 to 221.
* The acceleration/deceleration time represents the time until the axis reaches a programmed speed.

[Dimensions]

KBB-10E-BT

[Note 1] The values in ( ) are applicable when the stroke is 1,100 mm or over.

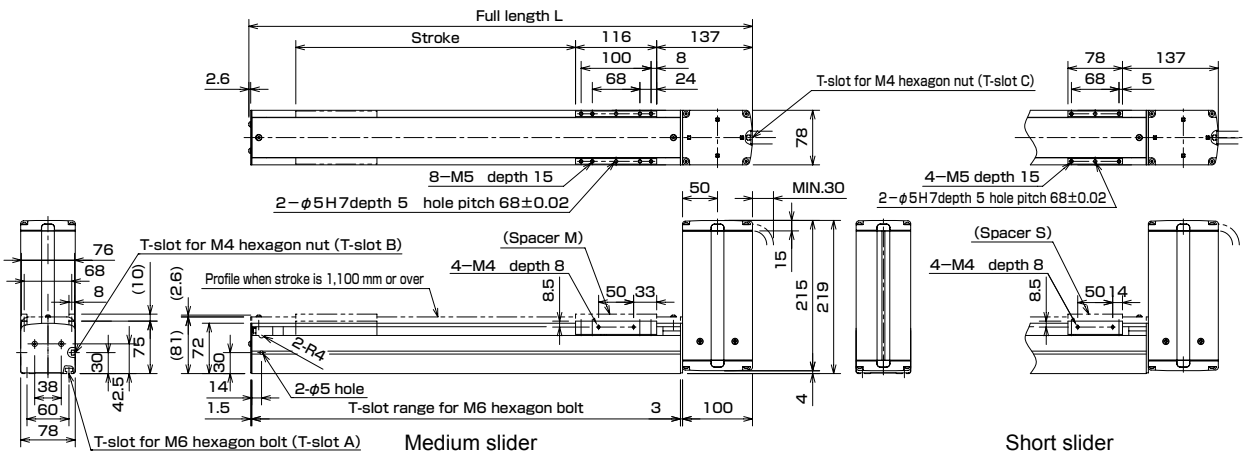

Timing Belt Driven

KBB-10E-BR

[Note 1] The values in ( ) are applicable when the stroke is 1,100 mm or over.

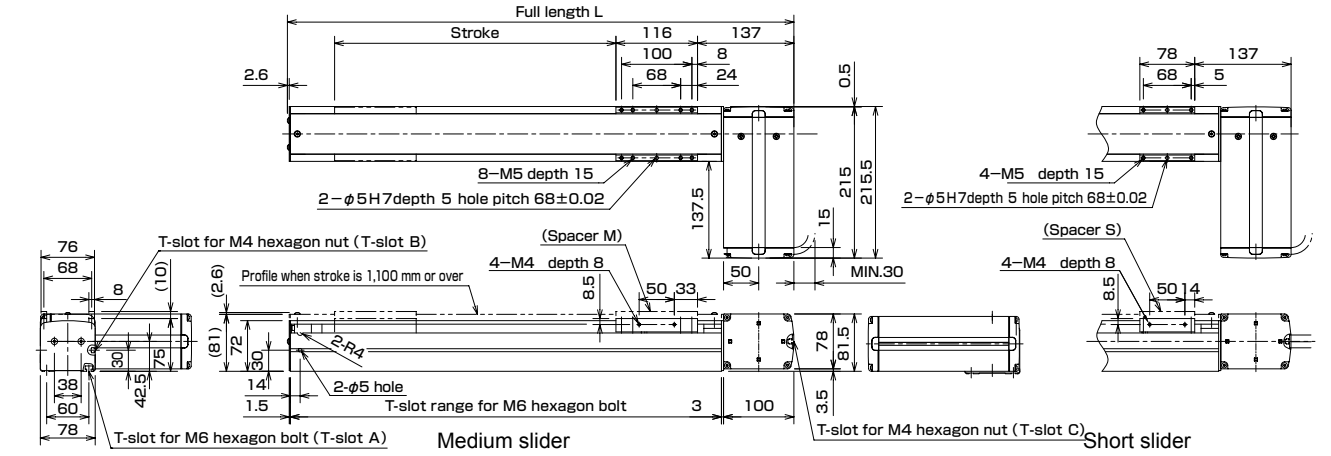

KBB-10E-BL

[Note 1] The values in ( ) are applicable when the stroke is 1,100 mm or over.

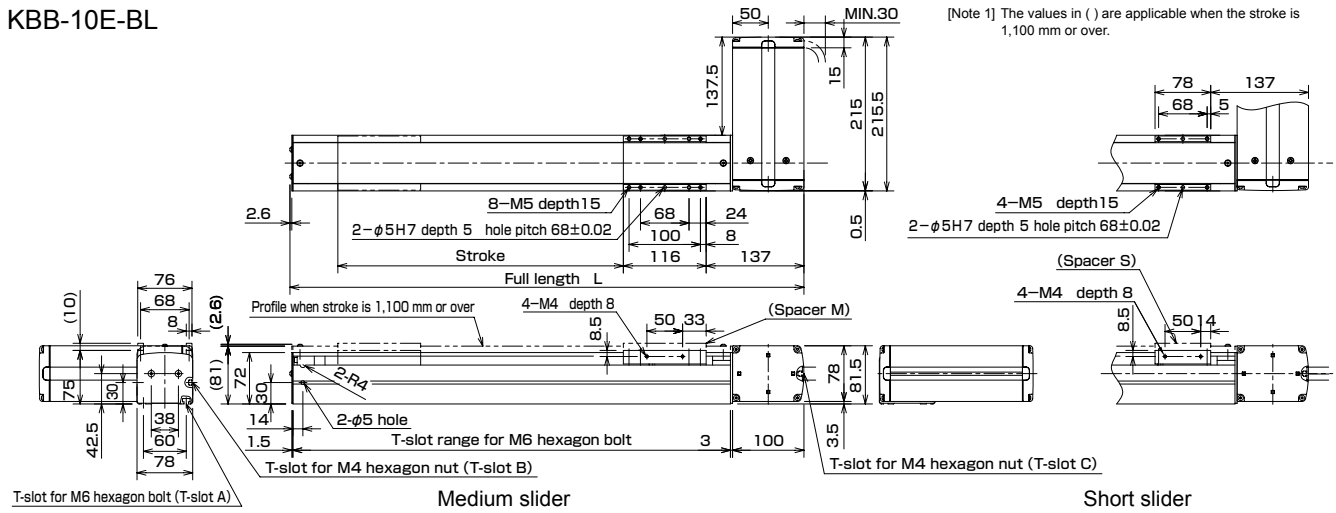

KBB-10E-BU

[Note 1] The values in ( ) are applicable when the stroke is 1,100 mm or over.

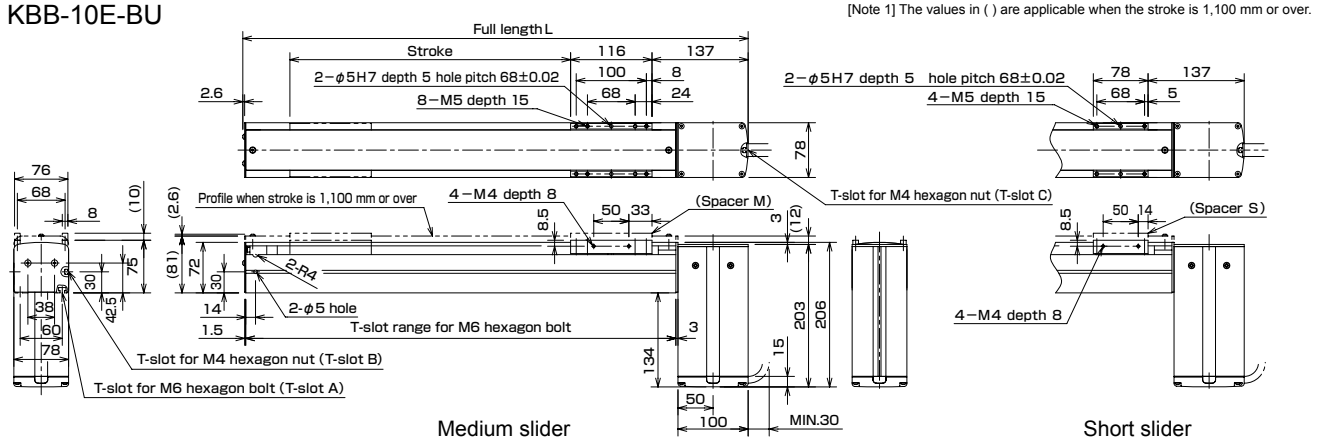

Common to KBB-10E-BT, BR, BL and BU.

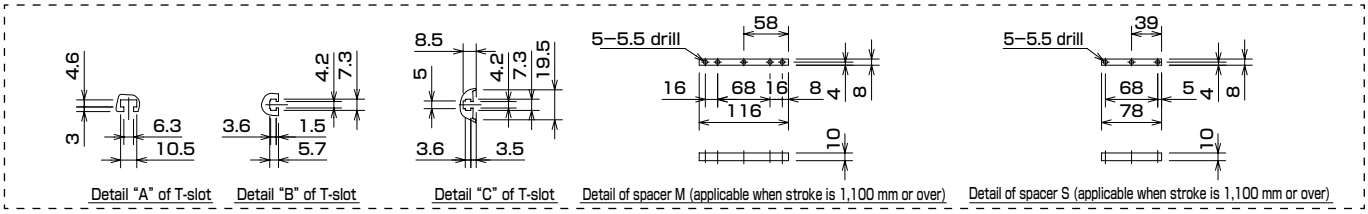

Medium slider Common to KBB-10E-BT, BR, BL and BU.

Stroke(mm)	100	200	300	400	500	600	700	800	900	1000	1100	1200	1300	1400	1500	1600	1700	1800
Full length L (mm)	420.1	520.1	620.1	720.1	820.1	920.1	1020.1	1120.1	1220.1	1320.1	1420.1	1520.1	1620.1	1720.1	1820.1	1920.1	2020.1	2120.1
Weight(kg)	5.0	5.6	6.2	6.8	7.4	8.0	8.6	9.2	9.8	10.4	11.0	11.6	12.2	12.8	13.4	14.0	14.6	15.2

Short slider Common to KBB-10E-BT, BR, BL and BU.

Stroke(mm)	150	250	350	450	550	650	750	850	950	1050	1150	1250	1350	1450	1550	1650	1750	1850
Full length L (mm)	420.1	520.1	620.1	720.1	820.1	920.1	1020.1	1120.1	1220.1	1320.1	1420.1	1520.1	1620.1	1720.1	1820.1	1920.1	2020.1	2120.1
Weight(kg)	4.7	5.3	5.9	6.5	7.1	7.7	8.3	8.9	9.5	10.1	10.7	11.3	11.9	12.5	13.1	13.7	14.3	14.9

Discontinue

[How to order]

KBB − 10F − BT − M 21 N − 40

Motor set direction	Slider type	Lead	Brake	Stroke
BT : Facing up BR : Facing right BL : Facing left BU : Facing down	S : Short slider M : Medium slider	21 : 21mm 42 : 42mm	N : Without brake	Refer to "Indication in model no." in specifications.

[Specifications]

Motor	200 W AC servo motor (absolute)										
Actuation	Timing belt										
Ball screw lead (mm)	21, 42										
Stroke (mm) (in increments of 100 mm)	Short slider	150 to 950	1050	1150	1250	1350	1450	1550	1650	1750	1850
	Indication in model no.	15 to 95	A5	B5	C5	D5	E5	F5	G5	H5	J5
	Medium slider	100 to 900	1000	1100	1200	1300	1400	1500	1600	1700	1800
	Indication in model no.	10 to 90	A0	B0	C0	D0	E0	F0	G0	H0	J0
Max. speed (mm/s)	Lead 21	1000									
	Lead 42	2000									
Max. load capacity (kg)	Lead 21	Horizontal transfer: 20, acceleration/deceleration time: 0.3 sec. or over									
	Lead 42	Horizontal transfer: 10, acceleration/deceleration time: 0.5 sec. or over									
Positioning repeatability (mm)	±0.05										
Resolution (mm)	0.01										
Allowable static load moment (N·m)	Short slider MR : 49 MP : 14 MY : 13 Medium slider MR : 59 MP : 59 MY : 54										
Master controller	Select from KCA-20-M10, KCA-20-M00										

Notes: * The max. load capacity signifies a load exerted on top of the slider. Also refer to the dynamic load moment given in pages 214 to 221.
* The acceleration/deceleration time represents the time until the axis reaches a programmed speed.

[Dimensions]

KBB-10F-BT

[Note 1] The values in ( ) are applicable when the stroke is 1,100 mm or over.

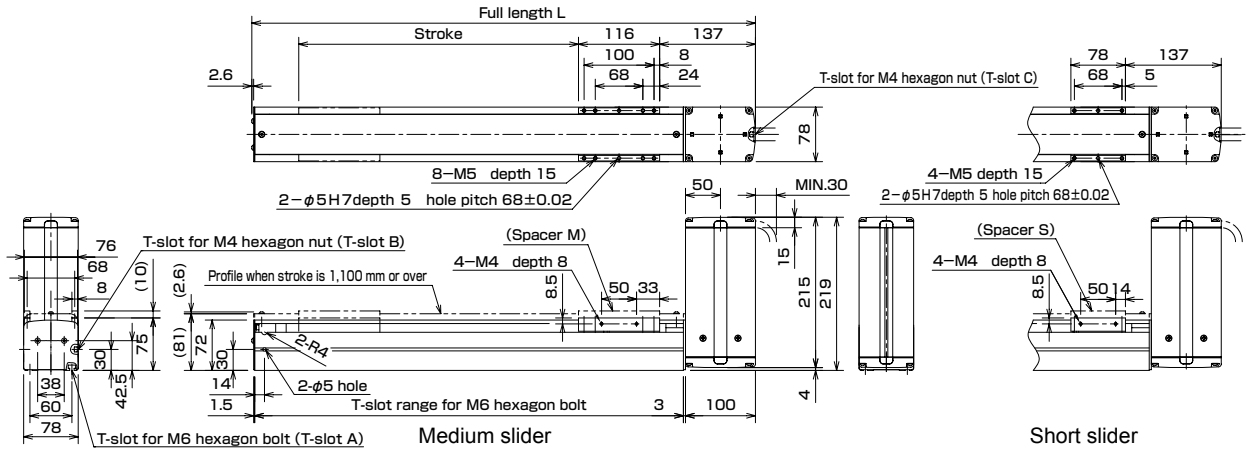

KBB-10F-BR

[Note 1] The values in ( ) are applicable when the stroke is 1,100 mm or over.

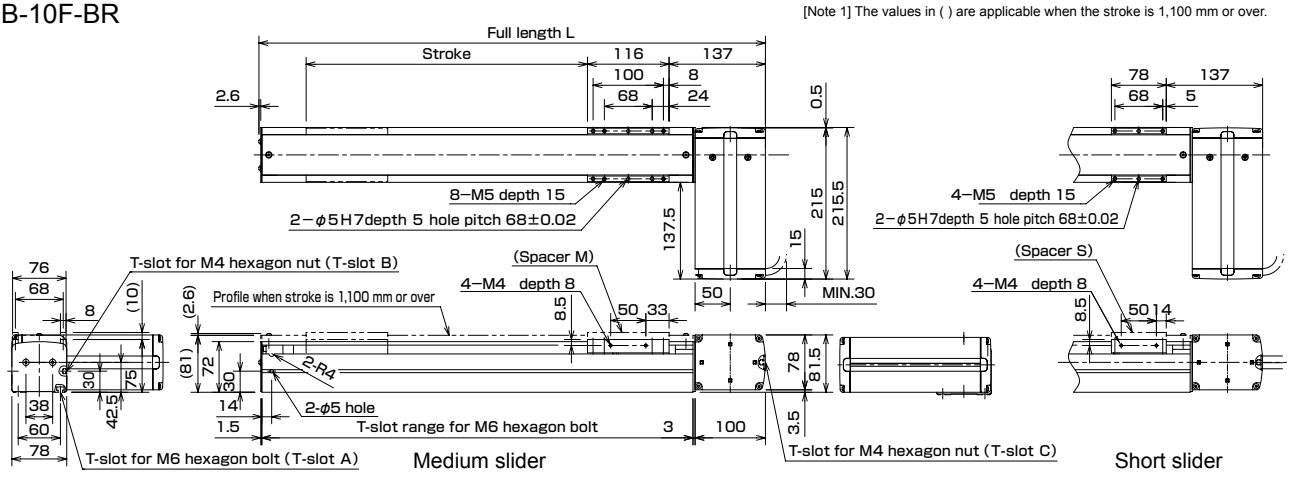

KBB-10F-BL

[Note 1] The values in ( ) are applicable when the stroke is 1,100 mm or over.

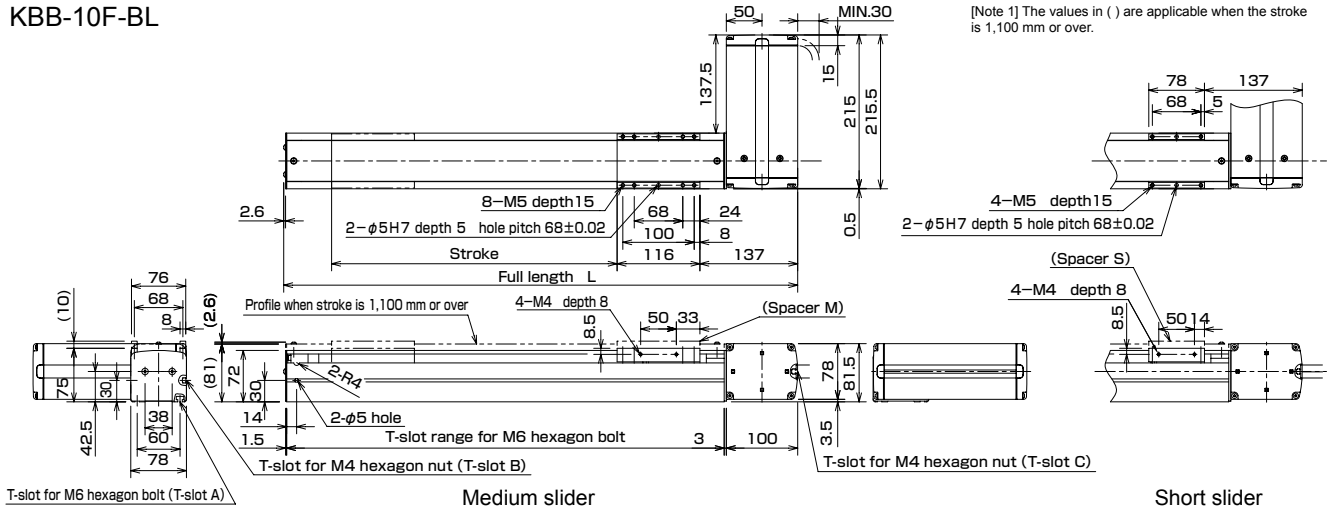

KBB-10F-BU

[Note 1] The values in ( ) are applicable when the stroke is 1,100 mm or over.

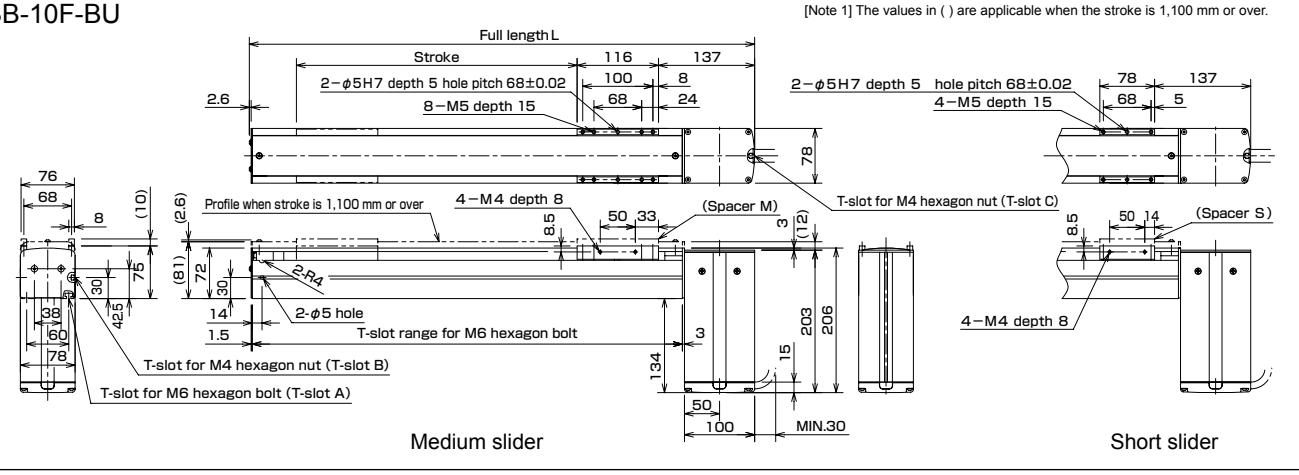

Common to KBB-10F-BT, BR, BL and BU.

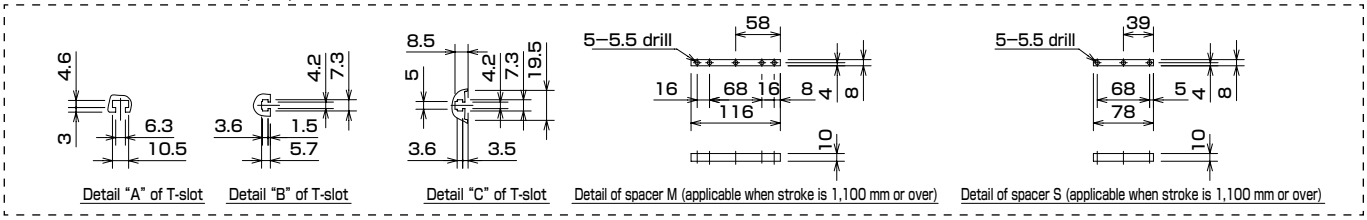

Medium slider Common to KBB-10F-BT, BR, BL and BU.

Stroke(mm)	100	200	300	400	500	600	700	800	900	1000	1100	1200	1300	1400	1500	1600	1700	1800
Full length L (mm)	420.1	520.1	620.1	720.1	820.1	920.1	1020.1	1120.1	1220.1	1320.1	1420.1	1520.1	1620.1	1720.1	1820.1	1920.1	2020.1	2120.1
Weight(kg)	5.8	6.4	7.0	7.6	8.2	8.8	9.4	10.0	10.6	11.2	11.8	12.4	13.0	13.6	14.2	14.8	15.4	16.0

Short slider Common to KBB-10F-BT, BR, BL and BU.

Stroke(mm)	150	250	350	450	550	650	750	850	950	1050	1150	1250	1350	1450	1550	1650	1750	1850
Full length L (mm)	420.1	520.1	620.1	720.1	820.1	920.1	1020.1	1120.1	1220.1	1320.1	1420.1	1520.1	1620.1	1720.1	1820.1	1920.1	2020.1	2120.1
Weight(kg)	5.5	6.1	6.7	7.3	7.9	8.5	9.1	9.7	10.3	10.9	11.5	12.1	12.7	13.3	13.9	14.5	15.1	15.7

Discontinue

[How to order]

KBB − 30E − BT − M 21 N − 40

Motor set direction	Slider type	Lead	Brake	Stroke
BT : Facing up BR : Facing right BL : Facing left BU : Facing down	M : Medium slider L : Long slider	21 : 21mm	N : Without brake	Refer to "Indication in model no." in specifications.

[Specifications]

Motor	100 W AC servo motor (absolute)																	
Actuation	Timing belt																	
Ball screw lead (mm)	21																	
Stroke (mm) (in increments of 100 mm)	Medium slider	100 to 900	1000	1100	1200	1300	1400	1500	1600	1700	1800	1900	2000	2100	2200	2300	2400	2500
	Indication in model no.	10 to 90	A0	B0	C0	D0	E0	F0	G0	H0	J0	K0	L0	M0	N0	P0	Q0	R0
	Long slider	150 to 950	1050	1150	1250	1350	1450	1550	1650	1750	1850	1950	2050	2150	2250	2350	2450	
	Indication in model no.	15 to 95	A5	B5	C5	D5	E5	F5	G5	H5	J5	K5	L5	M5	N5	P5	Q5	
Max. speed (mm/s)	1000																	
Max. load capacity (kg) Acceleration/deceleration time: 0.3 sec or over	Horizontal transfer: 15																	
Positioning repeatability (mm)	±0.05																	
Resolution (mm)	0.01																	
Allowable static load moment (N·m)	Medium slider MR : 510 MP : 430 MY : 370 Long slider MR : 510 MP : 750 MY : 650																	
Master controller	Select from KCA-20-M10, KCA-20-M00																	

Notes: * The max. load capacity signifies a load exerted on top of the slider. Also refer to the dynamic load moment given in pages 214 to 221.
* The acceleration/deceleration time represents the time until the axis reaches a programmed speed.

[Dimensions]

KBB-30E-BT

[Note 1] The values in ( ) are applicable when the stroke is 1,850 mm or over.

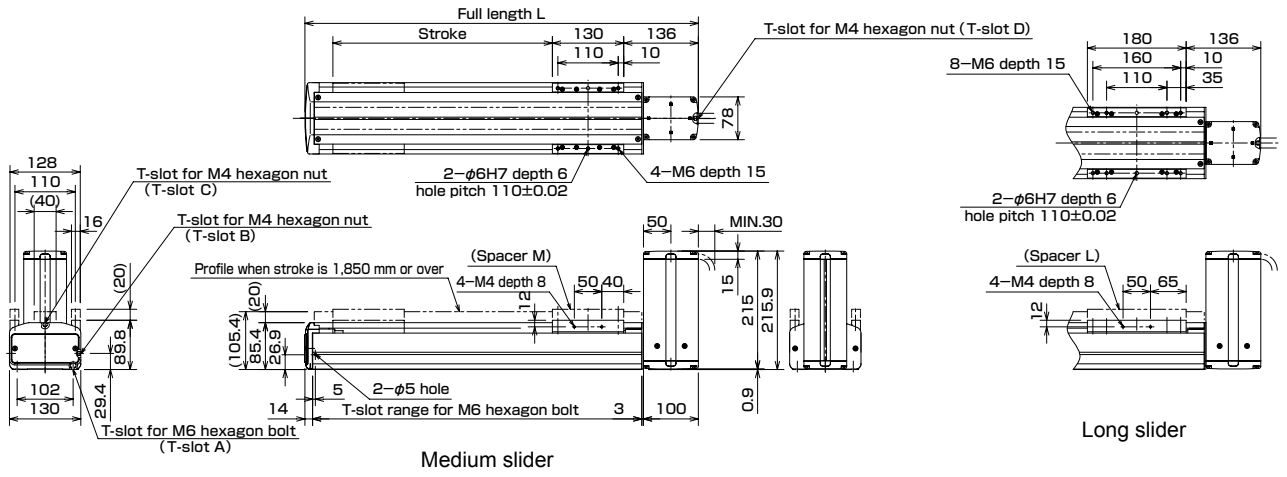

KBB-30E-BR

[Note 1] The values in ( ) are applicable when the stroke is 1,850 mm or over.

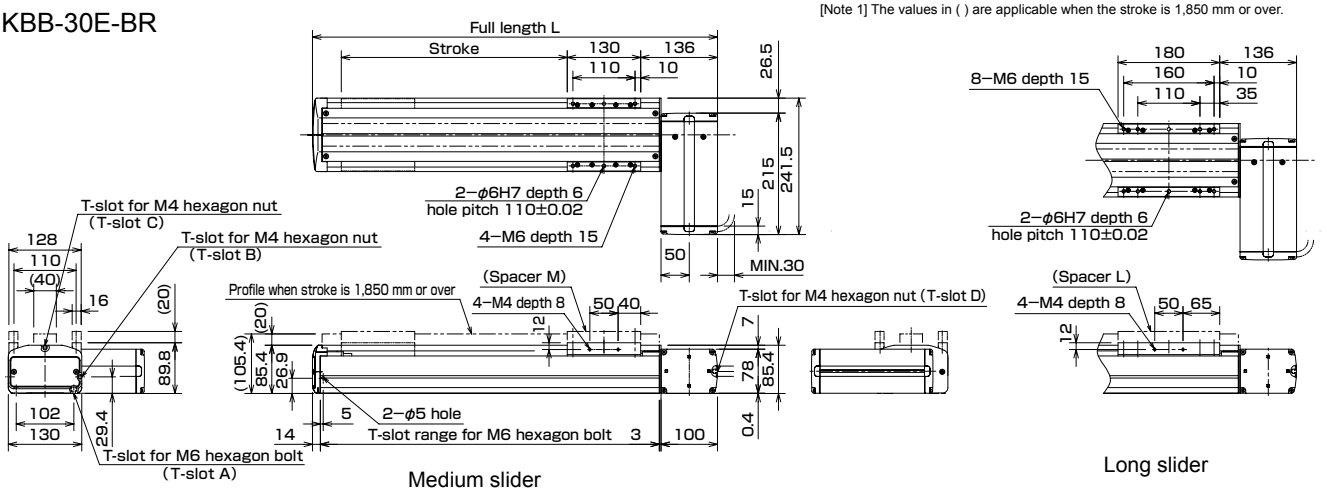

KBB-30E-BL

[Note 1] The values in ( ) are applicable when the stroke is 1,850 mm or over.

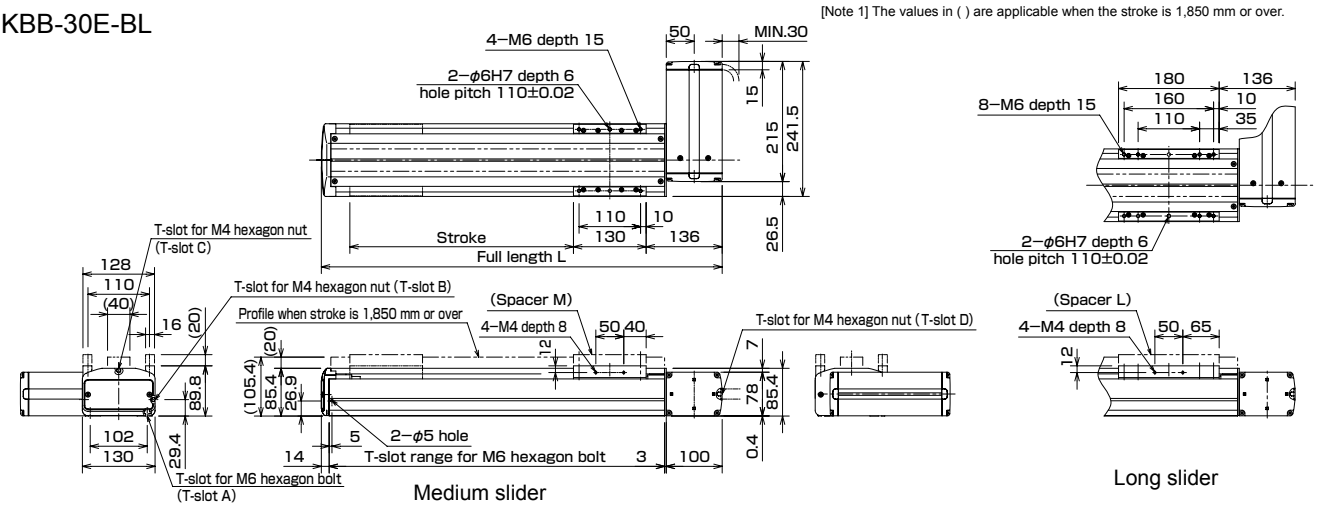

KBB-30E-BU

[Note 1] The values in ( ) are applicable when the stroke is 1,850 mm or over.

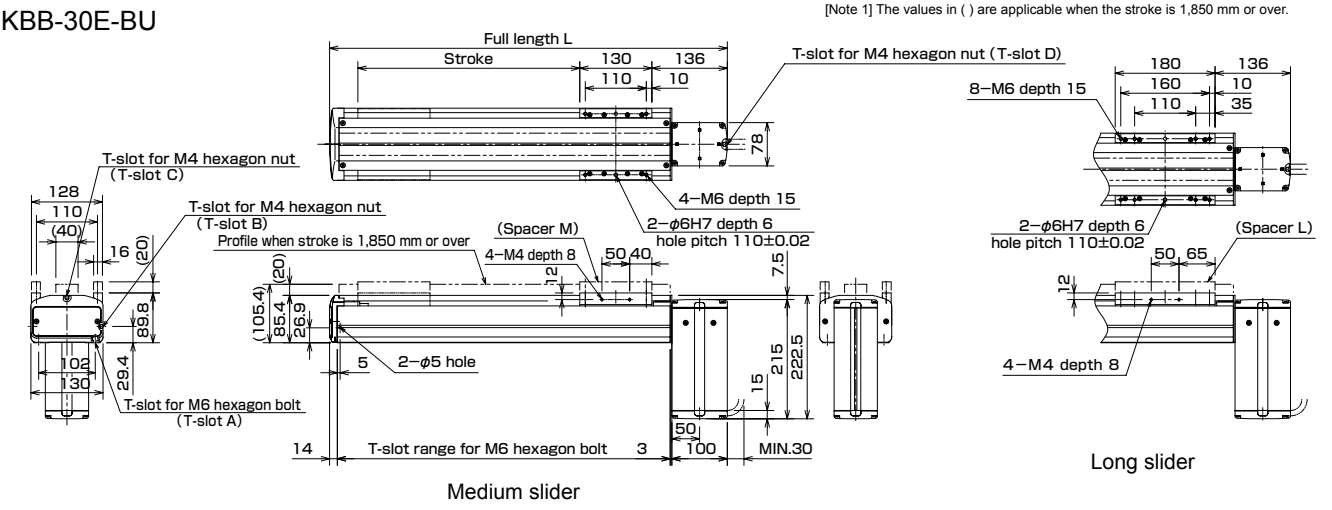

Common to KBB-10F-BT, BR, BL and BU.

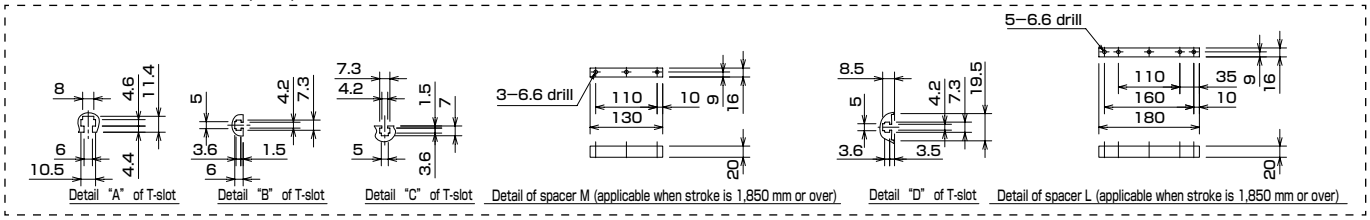

Medium slider Common to KBB-30E-BT, BR, BL and BU.

Stroke(mm)	100	200	300	400	500	600	700	800	900	1000	1100	1200	1300	1400	1500	1600	1700	1800	1900	2000	2100	2200	2300	2400	2500
Full length L(mm)	417	517	617	717	817	917	1017	1117	1217	1317	1417	1517	1617	1717	1817	1917	2017	2117	2217	2317	2417	2517	2617	2717	2817
Weight(kg)	7.9	9.0	10.1	11.2	12.3	13.4	14.5	15.6	16.7	17.8	18.9	20.0	21.1	22.2	23.3	24.4	25.5	26.6	27.7	28.8	29.9	31.0	32.1	33.2	34.3

Long slider Common to KBB-30E-BT, BR, BL and BU.

Stroke(mm)	150	250	350	450	550	650	750	850	950	1050	1150	1250	1350	1450	1550	1650	1750	1850	1950	2050	2150	2250	2350	2450
Full length L(mm)	517	617	717	817	917	1017	1117	1217	1317	1417	1517	1617	1717	1817	1917	2017	2117	2217	2317	2417	2517	2617	2717	2817
Weight(kg)	9.3	10.4	11.5	12.6	13.7	14.8	15.9	17.0	18.1	19.2	20.3	21.4	22.5	23.6	24.7	25.8	26.9	28.0	29.1	30.2	31.3	32.4	33.5	34.6

Discontinue

[How to order]

KBB − 30F − BT − M 21 N − 40

Motor set direction	Slider type	Lead	Brake	Stroke
BT : Facing up BR : Facing right BL : Facing left BU : Facing down	M : Medium slider L : Long slider	21 : 21mm 42 : 42mm	N : Without brake	Refer to "Indication in model no." in specifications.

[Specifications]

Motor	200 W AC servo motor (absolute)																	
Actuation	Timing belt																	
Ball screw lead (mm)	21, 42																	
Stroke (mm) (in increments of 100 mm)	Medium slider	100 to 900	1000	1100	1200	1300	1400	1500	1600	1700	1800	1900	2000	2100	2200	2300	2400	2500
	Indication in model no.	10 to 90	A0	B0	C0	D0	E0	F0	G0	H0	J0	K0	L0	M0	N0	P0	Q0	R0
	Long slider	150 to 950	1050	1150	1250	1350	1450	1550	1650	1750	1850	1950	2050	2150	2250	2350	2450	
	Indication in model no.	15 to 95	A5	B5	C5	D5	E5	F5	G5	H5	J5	K5	L5	M5	N5	P5	Q5	
Max. speed (mm/s)	Lead 21	1000																
	Lead 42	2000																
Max. load capacity (kg)	Lead 21	Horizontal transfer: 40 acceleration/deceleration time: 0.3 sec. or over																
	Lead 42	Horizontal transfer: 20 Acceleration/deceleration time: 0.3 sec. or over																
Positioning repeatability (mm)	±0.05																	
Resolution (mm)	0.01																	
Allowable static load moment (N·m)	Medium slider MR : 510 MP : 430 MY : 370 Long slider MR : 510 MP : 750 MY : 650																	
Master controller	Select from KCA-20-M10, KCA-20-M00																	

Notes: * The max. load capacity signifies a load exerted on top of the slider. Also refer to the dynamic load moment given in pages 214 to 221.
* The acceleration/deceleration time represents the time until the axis reaches a programmed speed.

[Dimensions]

KBB-30F-BT

[Note 1] The values in ( ) are applicable when the stroke is 1,850 mm or over.

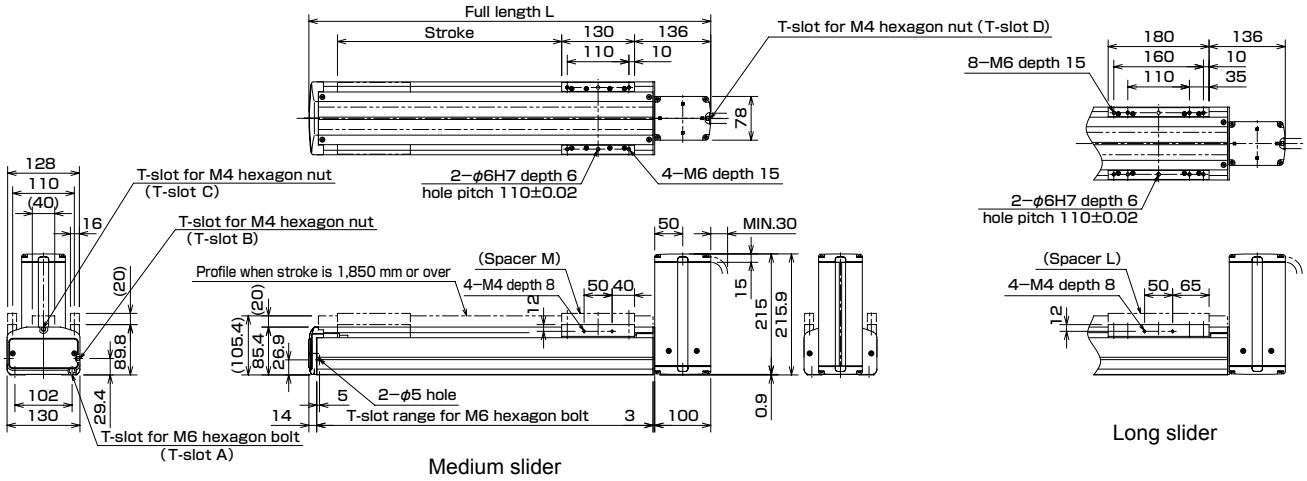

KBB-30F-BR

[Note 1] The values in ( ) are applicable when the stroke is 1,850 mm or over.

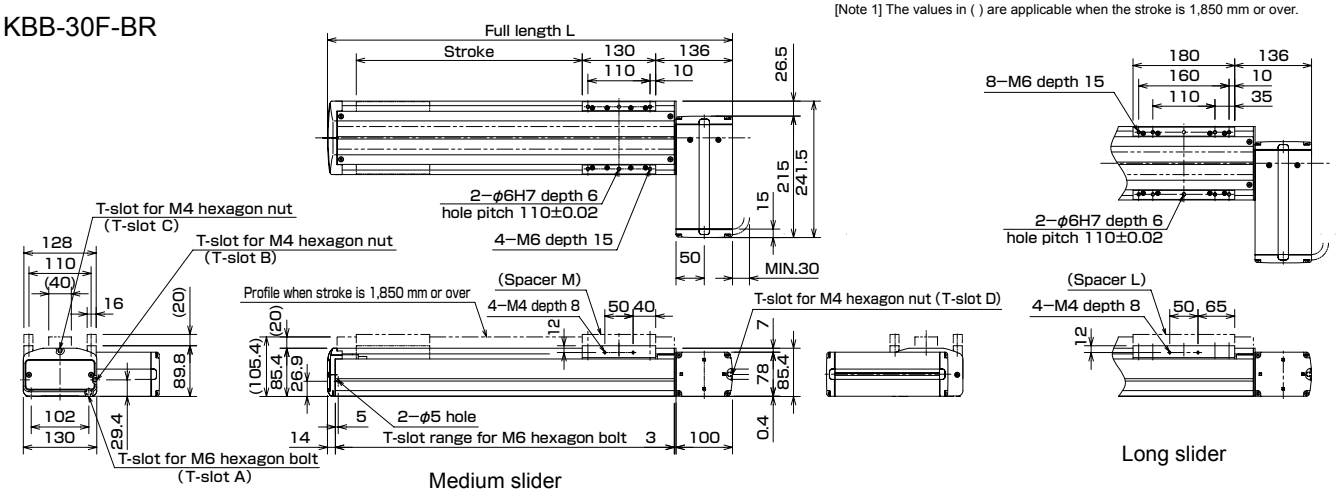

KBB-30F-BL

[Note 1] The values in ( ) are applicable when the stroke is 1,850 mm or over.

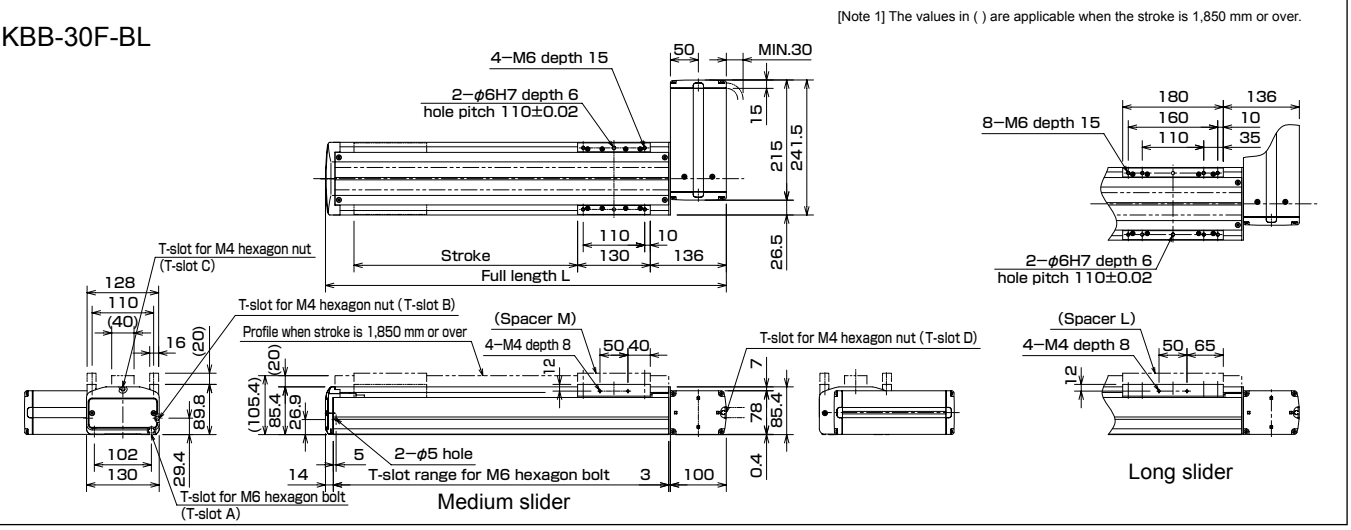

KBB-30F-BU

[Note 1] The values in ( ) are applicable when the stroke is 1,850 mm or over.

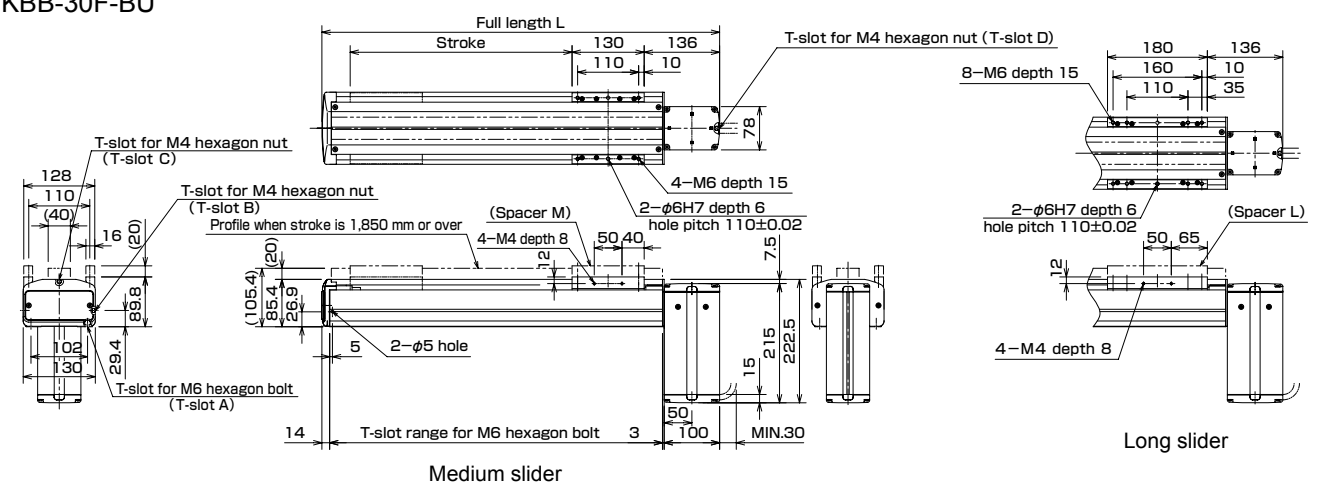

Common to KBB-30F-BT, BR, BL and BU.

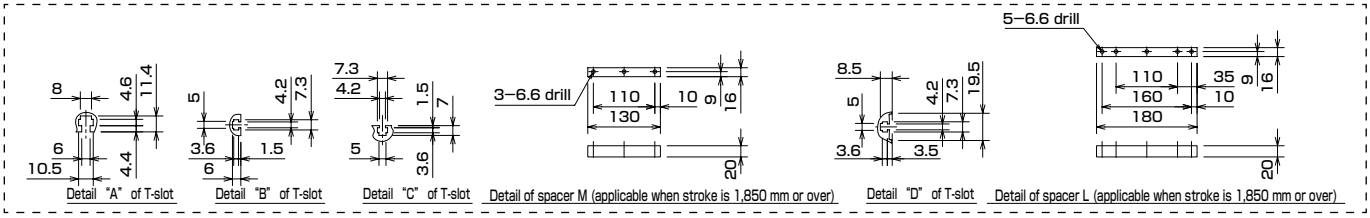

Medium slider Common to KBB-30F-BT, BR, BL and BU.

Stroke(mm)	100	200	300	400	500	600	700	800	900	1000	1100	1200	1300	1400	1500	1600	1700	1800	1900	2000	2100	2200	2300	2400	2500
Full length L(mm)	417	517	617	717	817	917	1017	1117	1217	1317	1417	1517	1617	1717	1817	1917	2017	2117	2217	2317	2417	2517	2617	2717	2817
Weight(kg)	8.7	9.8	10.9	12.0	13.1	14.2	15.3	16.4	17.5	18.6	19.7	20.8	21.9	23.0	24.1	25.2	26.3	27.4	28.5	29.6	30.7	31.8	32.9	34.0	35.1

Long slider Common to KBB-30F-BT, BR, BL and BU.

Stroke(mm)	150	250	350	450	550	650	750	850	950	1050	1150	1250	1350	1450	1550	1650	1750	1850	1950	2050	2150	2250	2350	2450
Full length L(mm)	517	617	717	817	917	1017	1117	1217	1317	1417	1517	1617	1717	1817	1917	2017	2117	2217	2317	2417	2517	2617	2717	2817
Weight(kg)	10.1	11.2	12.3	13.4	14.5	15.6	16.7	17.8	18.9	20.0	21.1	22.2	23.3	24.4	25.5	26.6	27.7	28.8	29.9	31.0	32.1	33.2	34.3	35.4

Discontinue

[How to order]

KBB − 50F − BT − M 21 N − 40

Motor set direction	Slider type	Lead	Brake	Stroke
BT : Facing up BR : Facing right BL : Facing left BU : Facing down	M : Medium slider L : Long slider	21 : 21mm	N : Without brake	Refer to "Indication in model no." in specifications.

[Specifications]

Motor	200 W AC servo motor (absolute)																	
Actuation	Timing belt																	
Ball screw lead (mm)	21																	
Stroke (mm) (in increments of 100 mm)	Medium slider	200 to 900	1000	1100	1200	1300	1400	1500	1600	1700	1800	1900	2000	2100	2200	2300	2400	2500
	Indication in model no.	20 to 90	A0	B0	C0	D0	E0	F0	G0	H0	J0	K0	L0	M0	N0	P0	Q0	R0
	Long slider	250 to 950	1050	1150	1250	1350	1450	1550	1650	1750	1850	1950	2050	2150	2250	2350	2450	
	Indication in model no.	25 to 95	A5	B5	C5	D5	E5	F5	G5	H5	J5	K5	L5	M5	N5	P5	Q5	
Max. speed (mm/s)	1000																	
Max. load capacity (kg) Acceleration/deceleration time: 0.3 sec or over	Horizontal transfer: 40																	
Positioning repeatability (mm)	±0.05																	
Resolution (mm)	0.01																	
Allowable static load moment (N·m)	Medium slider MR : 2080 MP : 2160 MY : 1820 Long slider MR : 2080 MP : 3150 MY : 2640																	
Master controller	Select from KCA-20-M10, KCA-20-M00																	

Notes: * The max. load capacity signifies a load exerted on top of the slider. Also refer to the dynamic load moment given in pages 214 to 221.
* The acceleration/deceleration time represents the time until the axis reaches a programmed speed.

[Dimensions]

KBB-50F-BT

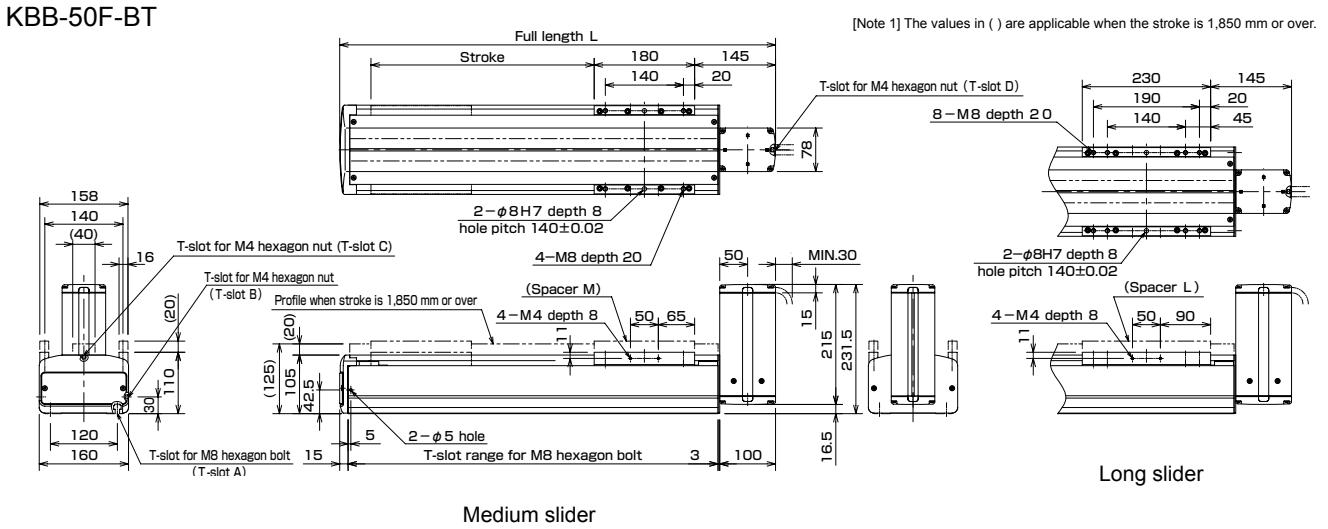

Timing Belt Driven

KBB-50F-BR

[Note 1] The values in ( ) are applicable when the stroke is 1,850 mm or over.

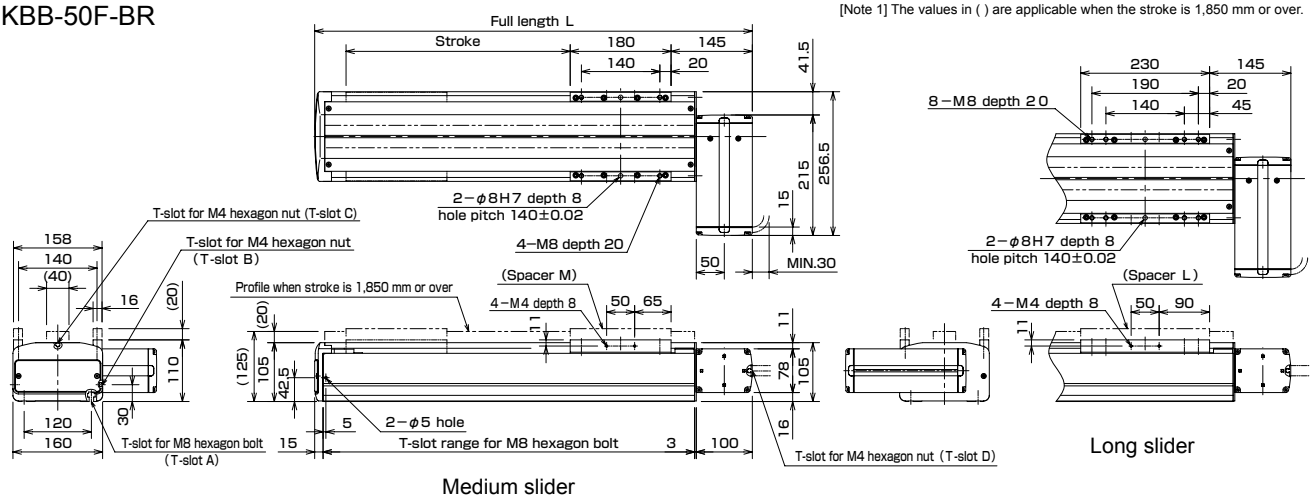

KBB-50F-BL

[Note 1] The values in ( ) are applicable when the stroke is 1,850 mm or over.

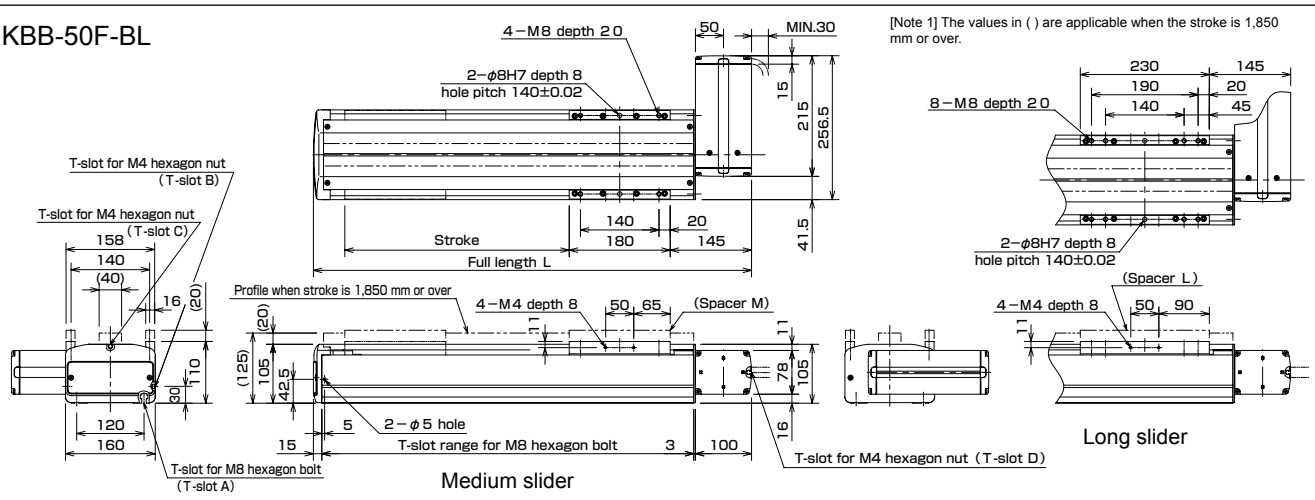

KBB-50F-BU

[Note 1] The values in ( ) are applicable when the stroke is 1,850 mm or over.

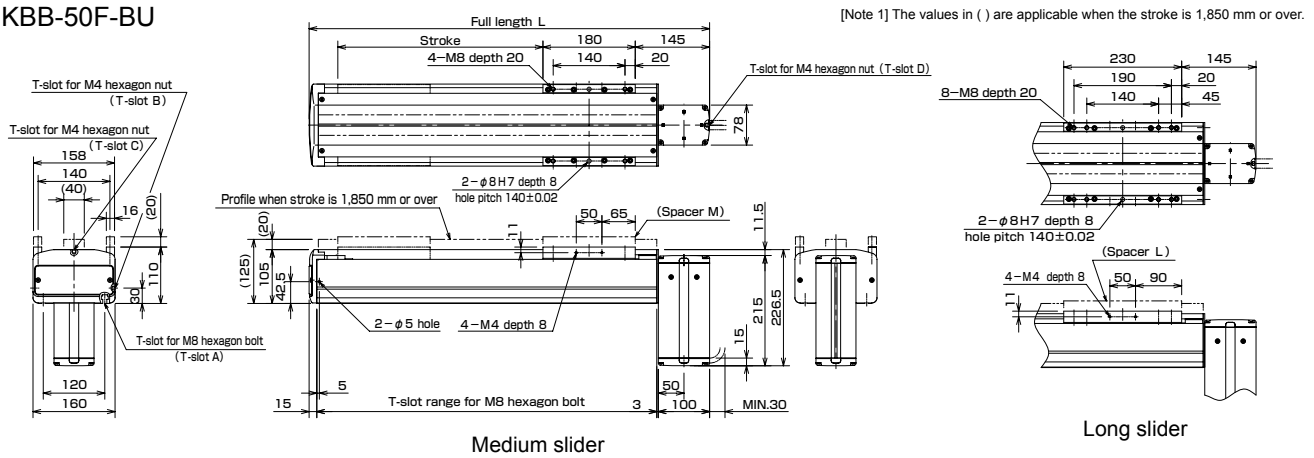

Common to KBB-50F-BT, BR, BL and BU.

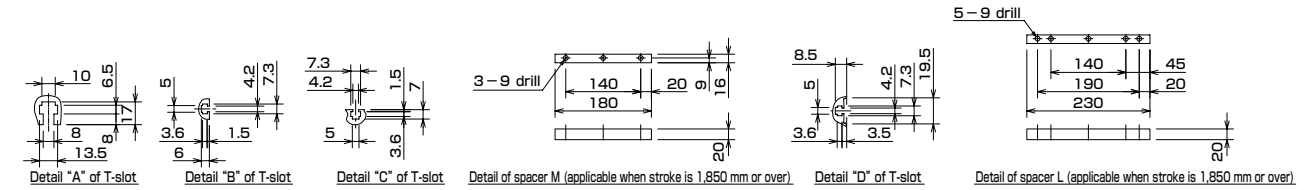

Medium slider Common to KBB-50F-BT, BR, BL and BU.

Stroke(mm)	200	300	400	500	600	700	800	900	1000	1100	1200	1300	1400	1500	1600	1700	1800	1900	2000	2100	2200	2300	2400	2500
Full length L(mm)	581	681	781	881	981	1081	1181	1281	1381	1481	1581	1681	1781	1881	1981	2081	2181	2281	2381	2481	2581	2681	2781	2881
Weight(kg)	12.9	14.6	16.3	18.0	19.7	21.4	23.1	24.8	26.5	28.2	29.9	31.6	33.3	35.0	36.7	38.4	40.1	41.8	43.5	45.2	46.9	48.6	50.3	52.0

Long slider Common to KBB-50F-BT, BR, BL and BU.

Stroke(mm)	250	350	450	550	650	750	850	950	1050	1150	1250	1350	1450	1550	1650	1750	1850	1950	2050	2150	2250	2350	2450
Full length L(mm)	681	781	881	981	1081	1181	1281	1381	1481	1581	1681	1781	1881	1981	2081	2181	2281	2381	2481	2581	2681	2781	2881
Weight(kg)	15.2	16.9	18.6	20.3	22.0	23.7	25.4	27.1	28.8	30.5	32.2	33.9	35.6	37.3	39.0	40.7	42.4	44.1	45.8	47.5	49.2	50.9	52.6

Discontinue

[How to order]

KBB − 50G − BT − M 42 N − 40

Motor set direction	Slider type	Lead	Brake	Stroke
BT : Facing up BR : Facing right BL : Facing left BU : Facing down	M : Medium slider L : Long slider	42 : 42mm	N : Without brake	Refer to "Indication in model no." in specifications.

[Specifications]

Motor	400 W AC servo motor (absolute)																
Actuation	Timing belt																
Ball screw lead (mm)	42																
Stroke (mm) (in increments of 100 mm)	Medium slider	200 to 900	1000	1100	1200	1300	1400	1500	1600	1700	1800	1900	2000	2100	2200	2300	2400	2500
	Indication in model no.	20 to 90	A0	B0	C0	D0	E0	F0	G0	H0	J0	K0	L0	M0	N0	P0	Q0	R0
	Long slider	250 to 950	1050	1150	1250	1350	1450	1550	1650	1750	1850	1950	2050	2150	2250	2350	2450	
	Indication in model no.	25 to 95	A5	B5	C5	D5	E5	F5	G5	H5	J5	K5	L5	M5	N5	P5	Q5	
Max. speed (mm/s)	2000																
Max. load capacity (kg) Acceleration/deceleration time: 0.5 sec or over	Horizontal transfer: 20																
Positioning repeatability (mm)	±0.05																
Resolution (mm)	0.01																
Allowable static load moment (N·m)	Medium slider MR : 2080 MP : 2160 MY : 1820 Long slider MR : 2080 MP : 3150 MY : 2640																
Master controller	Select from KCA-20-M40, KCA-20-M00																

Notes: * The max. load capacity signifies a load exerted on top of the slider. Also refer to the dynamic load moment given in pages 214 to 221.
* The acceleration/deceleration time represents the time until the axis reaches a programmed speed.

[Dimensions]

KBB-50G-BT

[Note 1] The values in ( ) are applicable when the stroke is 1,850 mm or over.

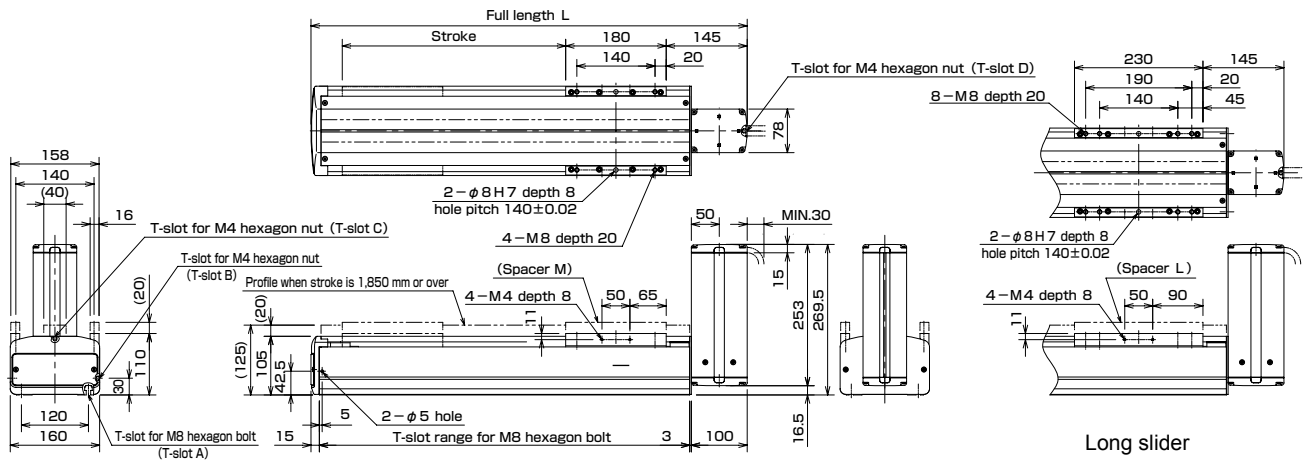

Timing Belt Driven

KBB-50G-BR

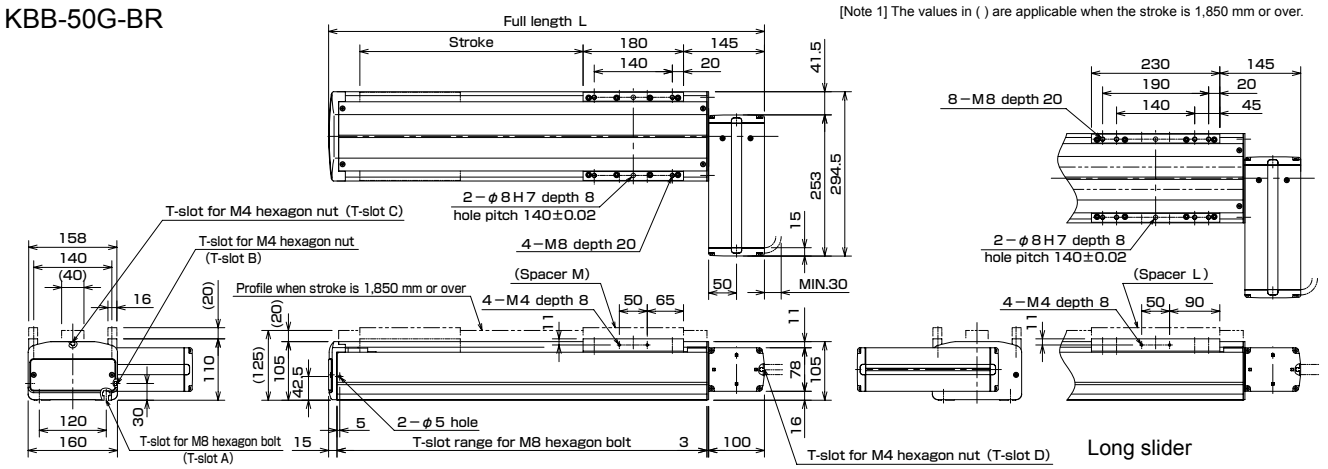

KBB-50G-BL

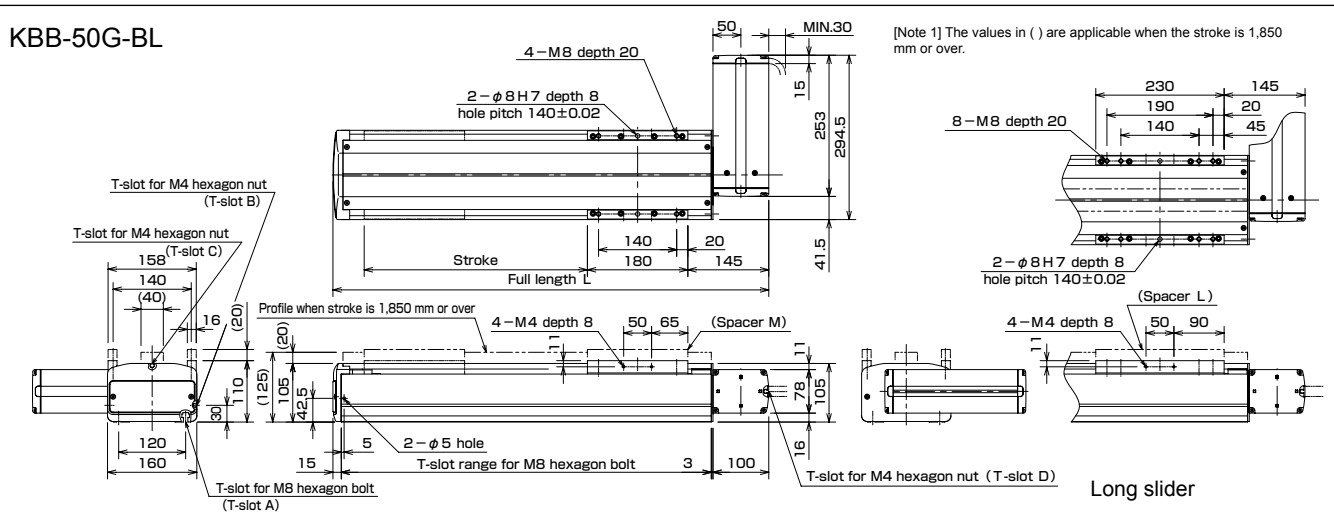

KBB-50G-BU

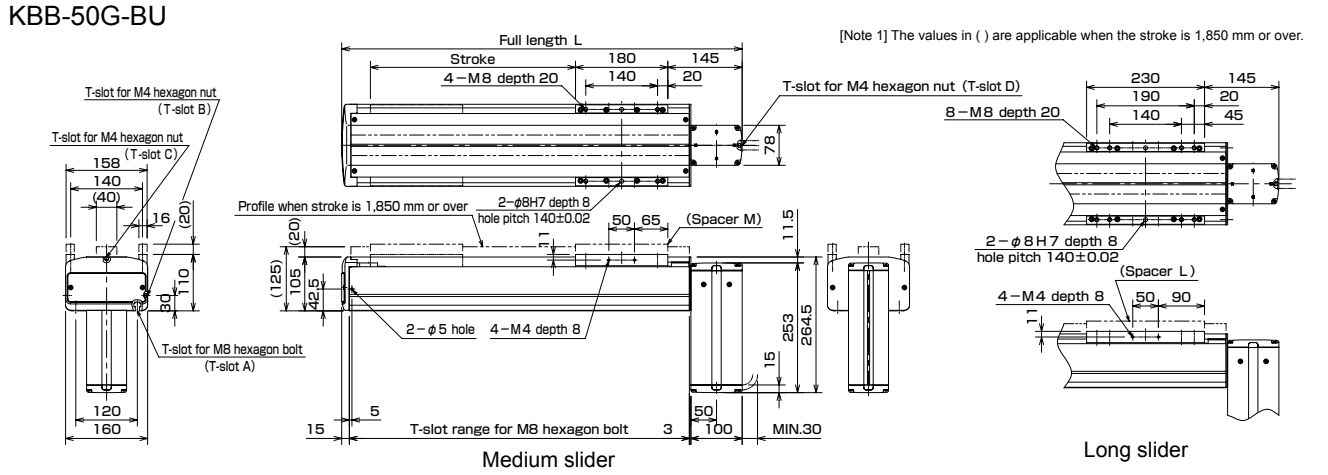

Common to KBB-50G-BT, BR, BL and BU.

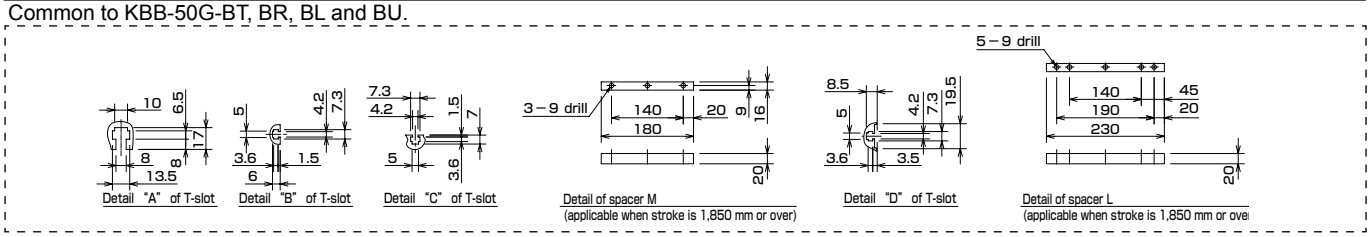

Medium slider Common to KBB-50G-BT, BR, BL and BU.

Stroke(mm)	200	300	400	500	600	700	800	900	1000	1100	1200	1300	1400	1500	1600	1700	1800	1900	2000	2100	2200	2300	2400	2500
Full length L(mm)	581	681	781	881	981	1081	1181	1281	1381	1481	1581	1681	1781	1881	1981	2081	2181	2281	2381	2481	2581	2681	2781	2881
Weight(kg)	13.5	15.2	16.9	18.6	20.3	22.0	23.7	25.4	27.1	28.8	30.5	32.2	33.9	35.6	37.3	39.0	40.7	42.4	44.1	45.8	47.5	49.2	50.9	52.6

Long slider Common to KBB-50G-BT, BR, BL and BU.

Stroke(mm)	250	350	450	550	650	750	850	950	1050	1150	1250	1350	1450	1550	1650	1750	1850	1950	2050	2150	2250	2350	2450
Full length L(mm)	681	781	881	981	1081	1181	1281	1381	1481	1581	1681	1781	1881	1981	2081	2181	2281	2381	2481	2581	2681	2781	2881
Weight(kg)	15.8	17.5	19.2	20.9	22.6	24.3	26.0	27.7	29.4	31.1	32.8	34.5	36.2	37.9	39.6	41.3	43.0	44.7	46.4	48.1	49.8	51.5	53.2

Discontinue

[How to order]

KBB − 00D − RH − A

Drive system	Mounting
RH: Harmonic	A: L-shaped bracket F: Flange type

[Specifications]

Motor	50 W AC servo motor (absolute)	
Drive system	Harmonic drive	
Reduction ratio	1/50	
Range of rotation (deg.)	360	
Max. speed (deg. /s)	360	
Max. load capacity (kg) Acceleration/deceleration time: 0.3 sec. or over	5	
Rated output torque (N·m)	2.5	
Allowable load inertia (kg·m^2)	0.0485	
Allowable thrust load on axis (N)	49	
Allowable radial load on axis (N)	98	
Allowable load moment on axis (N·m)	0.65	
Positioning repeatability (deg.)	±0.025	
Resolution (deg.)	0.01	
Weight of axis (kg)	L-shaped bracket	2.0
	Flange type	1.8
Master controller	Select from KCA-20-M10, KCA-20-M00	

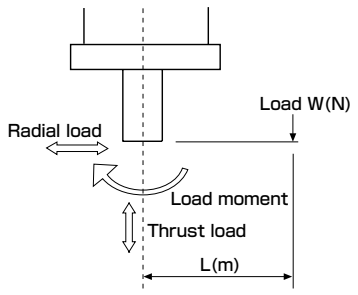

Allowable load moment on axis =W × L (N・m)

Notes: * The max. load capacity signifies a load measured when only thrust load is exerted on the vertically installed axis.
* The acceleration/deceleration time represents the time until the axis reaches a programmed speed.

[Dimensions]

[KBB-00D-RH-A]

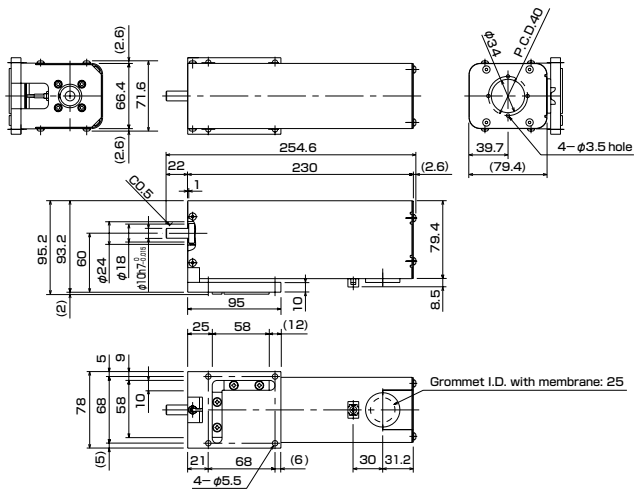

[KBB-00D-RH-F]

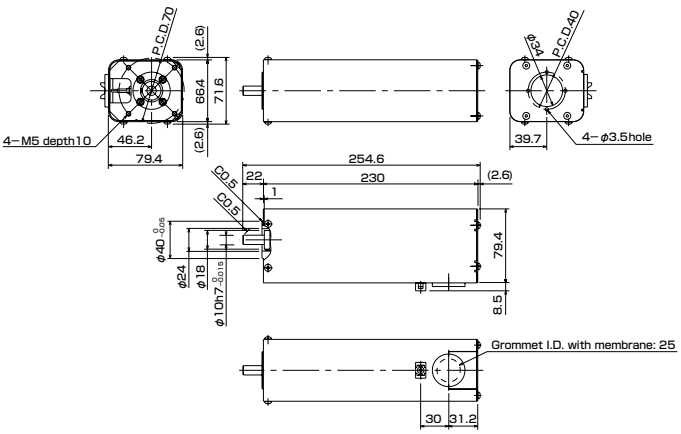

R-Axis

[How to order]

KBB − 00D − RP − A

Drive system	Mounting
RP: Planet gear	A: L-shaped bracket F: Flange type

[Specifications]

Motor	50 W AC servo motor (absolute)	
Actuation	Planet gear	
Reduction ratio	1/21	
Range of rotation (deg.)	360	
Max. speed (deg. /s)	857	
Max. load capacity (kg) Acceleration/deceleration time: 0.3 sec. or over	10	
Rated output torque (N·m)	3.9	
Allowable load inertia (kg·m^2)	0.0125	
Allowable thrust load on axis (N)	98	
Allowable radial load on axis (N)	196	
Allowable load moment on axis (N·m)	1.3	
Positioning repeatability (deg.)	±0.125	
Resolution (deg.)	0.01	
Weight of axis (kg)	L-shaped bracket	2.4
	Flange type	2.2
Master controller	Select from KCA-20-M10, KCA-20-M00	

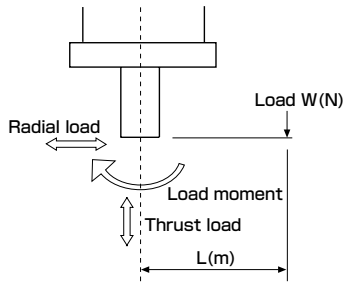

Allowable load moment on axis =W × L (N・m)

Notes: * The max. load capacity signifies a load measured when only thrust load is exerted on the vertically installed axis.
* The acceleration/deceleration time represents the time until the axis reaches a programmed speed.

[Dimensions]

[KBB-00D-RP-A]

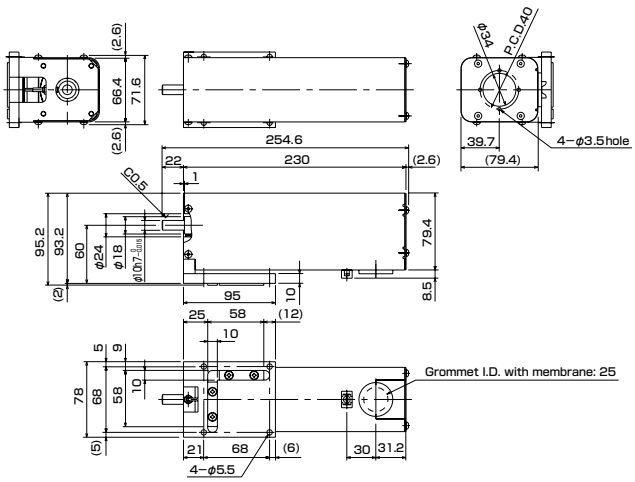

[KBB-00D-RP-F]

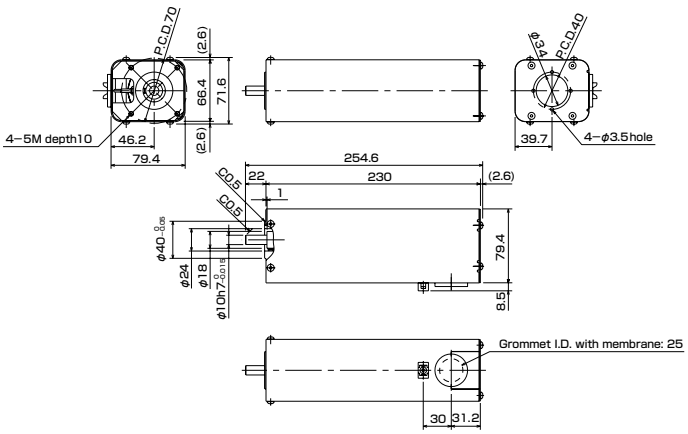

R-Axis

Discontinue

Discontinue

Variations

Discontinue

Simple Dust-Resistant Axes Specifications

Simple dust-resistant axes with provisions for preventing entry of contaminant into axes.

They protect the ball screws and linear guides from a dusty working environment.

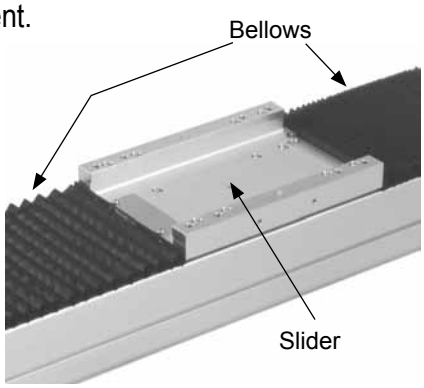

[Features]

- Designed based on the standard axes. Long service life can be assured by the construction of the bellows.
- Both straight axis and side mounted motor axis are available to serve each user's installation space.
- The side mounted motor axis comes in three types; right side mounted motor axis, left side mounted motor axis and bottom side mounted motor axis.
- Each axis can be mounted horizontally by facing up or sideways, or mounted vertically.

Simple dust-resistant axis KBB-10

The specifications other than outer dimensions are the same as those of the KBB-10 standard axis.
See Pages 16 ~ 17.

[How to order]

KBB − 10 E − ST − M 20 N − 40 − D

Motor spec.	Axis type	Slider type	Lead	Brake	Basic stroke		Axis variation
E: Absolute	ST: Straight axis	M: Medium slider	20 : 20mm	N: Without brake	Medium slider	Short slider	D: Simple dustresistant axis
	UR: Right side mounted motor axis	S: Short slider	10 : 10mm	B: With brake	10: 100mm	15: 150mm	
	UL: Left side mounted motor axis		05 : 5mm		20: 200mm	25: 250mm	
	UU: Bottom side mounted motor axis				~	~	
					A0:1000mm	A5:1050mm	

• Specify the basic stroke.

[Dimensions] Motor straight axis

★ For the dimensions of other axis structures, consult with our sales office in your territory.

KBB-10E-ST

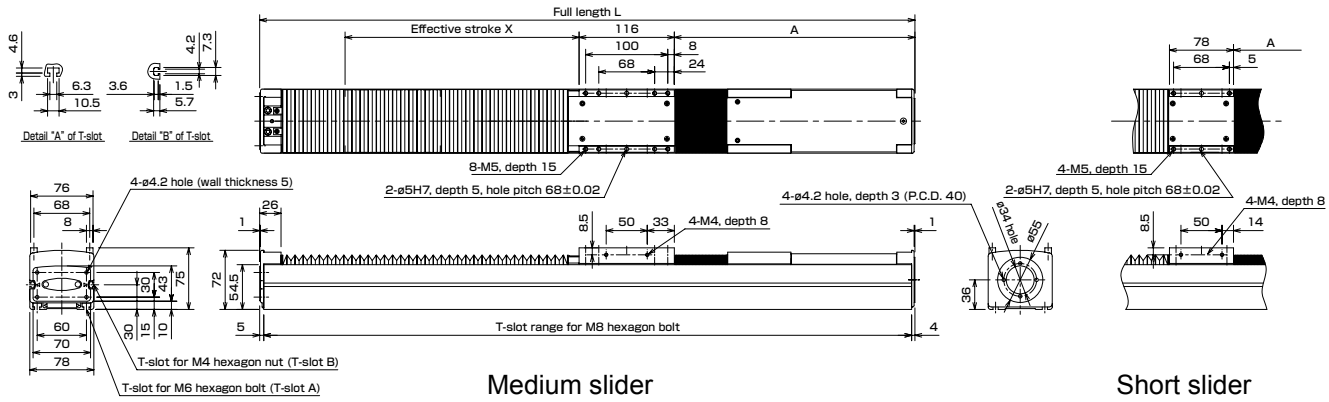

Medium slider

Basic stroke (mm)		100	200	300	400	500	600	700	800	900	1000
Effective stroke X (mm)		65	133	217	285	369	453	521	605	673	757
L (mm)	Without brake	498	598	698	798	898	998	1098	1198	1298	1398
	With brake	540	640	740	840	940	1040	1140	1240	1340	1440
A (mm)	Without brake	253	269	277	293	301	309	325	333	349	357
	With brake	295	311	319	335	343	351	367	375	391	399

Short slider

Basic stroke (mm)		150	250	350	450	550	650	750	850	950	1050
Effective stroke X (mm)		99	183	251	335	403	487	555	639	707	791
L (mm)	Without brake	498	598	698	798	898	998	1098	1198	1298	1398
	With brake	540	640	740	840	940	1040	1140	1240	1340	1440
A (mm)	Without brake	261	269	285	293	309	317	333	341	357	365
	With brake	303	311	327	335	351	359	375	383	399	407

Simple dust-resistant axis KBB-30

The specifications other than outer dimensions are the same as those of the KBB-30 standard axis. See Pages 18 ~ 21.

[How to order]

KBB − 30 E − ST − M 20 N − 40 − D

Motor spec.	Axis type	Slider type	Lead	Brake	Basic stroke	Axis variation
E: Absolute 100W F: Absolute 200W	ST: Straight axis UR: Right side mounted motor axis UL: Left side mounted motor axis UU: Bottom side mounted motor axis	M: Medium slider L: Long slider	20 : 20mm 10 : 10mm 05 : 5mm	N: Without brake B: With brake	* See the basic stroke of the standard axis.	D: Simple dust-resistant axis

• Specify the basic stroke.

[Dimensions] Motor straight axis

★ For the dimensions of other axis structures, consult with our sales agent in your territory.

KBB-30E-ST

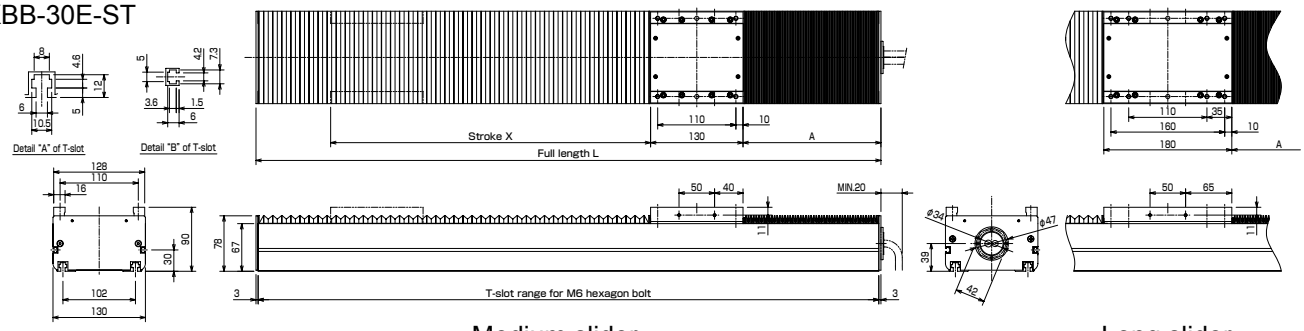

Medium slider

Long slider

Medium slider

Basic stroke (mm)		150	250	350	450	550	650	750	850	950	1050
Effective stroke (mm)		150	250	350	450	550	650	750	850	950	1050
L (mm)	Without brake	536	651	765	879	993	1107	1222	1336	1450	1570
	With brake	576	691	805	919	1033	1147	1262	1376	1490	1604
A (mm)	Without brake	194	194	194	194	194	194	194	194	194	200
	With brake	234	234	234	234	234	234	234	234	234	234

Long slider

Basic stroke (mm)		150	250	350	450	550	650	750	850	950	1050
Effective stroke (mm)		150	250	350	450	550	650	750	850	950	1050
L (mm)	Without brake	536	651	765	879	993	1107	1228	1356	1484	1612
	With brake	576	691	805	919	1033	1147	1262	1376	1490	1612
A (mm)	Without brake	144	144	144	144	144	144	150	164	178	192
	With brake	184	184	184	184	184	184	184	184	184	192

Simple dust-resistant axis KBB-50

The specifications other than outer dimensions are the same as those of the KBB-50 standard axis. See Pages 22 ~ 25.

[How to order]

KBB − 50 F − ST − M 20 N − 40 − D

Motor spec.	Axis type	Slider type	Lead	Brake	Basic stroke		Axis variation
E: Absolute 200W G: Absolute 400W	ST: Straight axis UR: Right side mounted motor axis UL: Left side mounted motor axis UU: Bottom side mounted motor axis	M: Medium slider L: Long slider	20 : 20mm 10 : 10mm 05 : 5mm	N: Without brake B: With brake	Medium slider 20: 200mm ~ A0:1000mm F0:1500mm	Short slider 25: 250mm ~ A5:1050mm E5:1450mm	D: Simple dustresistant axis

• Specify the basic stroke.

[Dimensions] Motor straight axis

★ For the dimensions of other axis structures, consult with our sales agent in your territory.

KBB-50F-ST

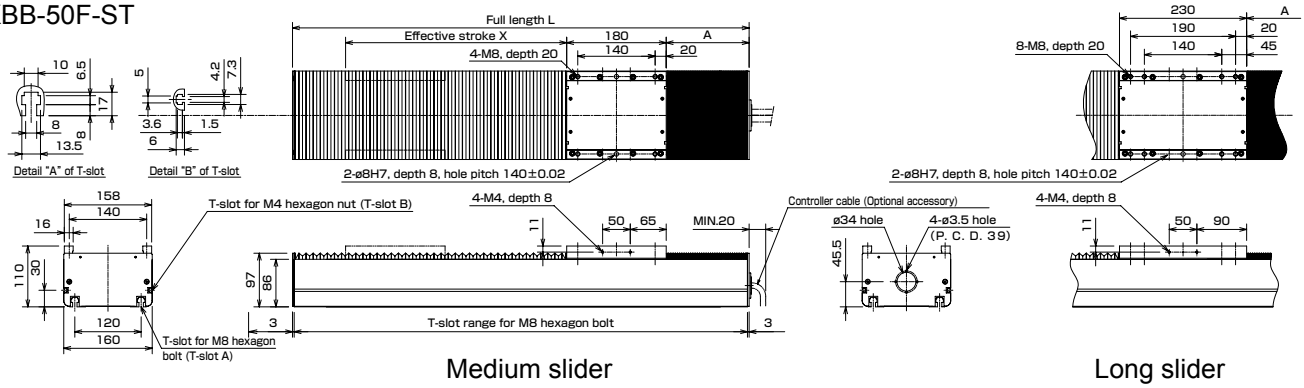

Medium slider

Long slider

Medium slider

Basic stroke (mm)		200	300	400	500	600	700	800	900	1000	1100	1200	1300	1400	1500
Effective stroke (mm)		200	300	400	500	600	700	800	900	1000	1100	1200	1300	1400	1500
L (mm)	Without brake	597	712	826	940	1054	1168	1286	1414	1542	1656	1784	1914	2042	2170
	With brake	634	749	863	977	1091	1205	1320	1434	1548	1655	1784	1914	2042	2170
A (mm)	Without brake	150	150	150	150	150	150	153	167	181	188	202	217	231	245
	With brake	187	187	187	187	187	187	187	187	187	187	202	217	231	245

Long slider

Basic stroke (mm)		250	350	450	550	650	750	850	950	1050	1150	1250	1350	1450
Effective stroke (mm)		250	350	450	550	650	750	850	950	1050	1150	1250	1350	1450
L (mm)	Without brake	705	819	933	1047	1161	1279	1400	1528	1656	1770	1898	2028	2156
	With brake	742	856	970	1084	1198	1313	1427	1541	1655	1770	1898	2028	2156
A (mm)	Without brake	150	150	150	150	150	153	160	174	188	195	207	224	238
	With brake	187	187	187	187	187	187	187	187	187	195	209	224	238

Discontinue

Cleanroom Specifications

Designed for cleanness “Class 100” (0.3 μm-based).

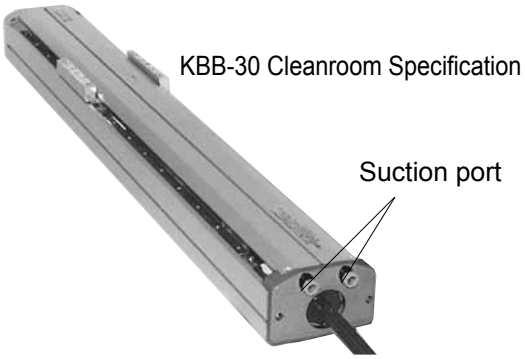

[Features]

- Special cleanroom design for axis for realizing cleanliness of Class 100 (0.3 μm)
- Highest available speed at Class 100! Maximum speed of 1200mm/s (at stroke of 600mm or less) is possible.

[Specifications]

Axis type (Note 1)		KBB-10	KBB-30
Cleanness (Note 2)		Class 100 (0.3μm-based)	
Axis combination types		Single axis or Orthogonal X-Y table type, slider upper side horizontal installation	
Applicable controller		KCA−20−M10, KCA−10−M00B, KCA−20−S10	
Motor		Compact AC servo motor 100W	Compact AC servo motor 100W, 200W
Drive system		Ground ball screw (C7), (ø15mm, Lead 20, 10, 5mm)	
Stroke (mm)		100 to 1050	
Max. load capacity (kg)	Single	Same as standard axis	Same as standard axis
	Orthogonal	Same as standard axis	
Advisory speed (mm/s) (Note 3)	Lead 20mm	400 (1200)	
	Lead 10mm	200 (600)	
	Lead 5mm	100 (300)	
Repeated stopping accuracy (mm)/Resolution (mm)		±0.01 / 0.01	
Surface treatment		Aluminum extruded parts: (almite treatment) Iron material plate: (non electrolytic nickel plating) Die-cast parts: (no treatment) Ball screw guide: (no treatment) (custom order: vaydeut treatment)	
Grease		Low dust grease (rust-proofing grease) Applied to ball screw, linear guide and ball bearing	
Amount of necessary air suctioned (Nℓ/min)	Straight axis	60	150
	Mounting axis	60, inside of belt cover 20	150, inside of belt cover 60
Necessary vacuum pressure (kPa)	Straight axis	21	21
	Mounting axis	21, inside of belt cover 5	21, inside of belt cover 17
Suction port for air suction (fitting for air tube)	Straight axis	ø6mm (for one place)	ø10mm (for two places)
	Mounting axis	ø6mm (for two places)	ø12mm (for one place), ø6mm (for one place)

(Note 1) Refer to [type] for details. (Note 2) When the air is suctioned as the specifications indicate under the environment equivalent to the conditions for measuring.
(Note 3) Recommendation for class 100. The numbers in ( ) are the maximum capacity ignoring cleanness. The maximum speed of more than stroke 700 mm is limited. Refer to axis specifications on page 16 to 21 for details. (Note 4) For suction pump, customers need to prepare the item which has necessary capacity.

■Cleanness measurement points and raised dust

Single axis

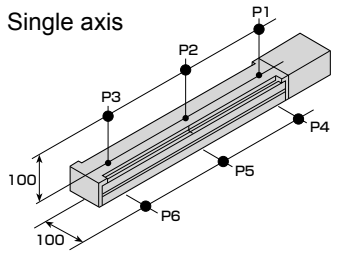

Table type

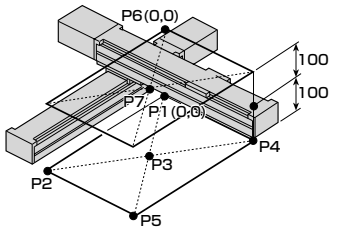

Unit: piece (more than 0.3μm)

Single axis	Measurement points					
	P1	P2	P3	P4	P5	P6
KBB-10 (600st)	11	21	17	4	6	9
KBB-30 (600st)	12	9	16	26	20	17

X – Y table type	Measurement points						
	P1	P2	P3	P4	P5	P6	P7
KBB-10×KBB-10 (400×400st)	23	19	13	6	17	4	2
KBB-30×KBB-10 (400×400st)	30	30	16	19	22	5	21

Cleanness measurement environment

Cleanness in measurement room: the booth in class 10
Downflow in measurement room: 0.1 to 0.3m/sec
Measuring instrument: multipoint particle counter
(Minimum measurable dust: 0.16μm)
Sample flow rate: 1 cubic feet per min
Measured axis stroke: 600mm
Movement pattern: continuous reciprocating movement
Pause for each 1 sec, at the edge of the stroke between all the strokes

Measurement conditions

Axial speed: 400mm/s
Acceleration/deceleration time: 0.3sec
Amount of air suctioned: 60Nℓ/min (KBB-10)
150Nℓ/min (KBB-30)
Others: depending on specifications for measurement environment etc.

■Speed and raised dust amount Axial speed

Axial speed: (50 to 1000mm/s)
Type of the measured axis: KBB-10E-ST-M20N-60-C

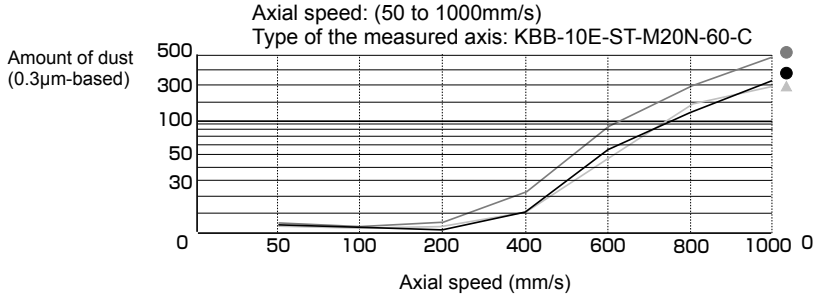

3 points of the center part of axis are measured

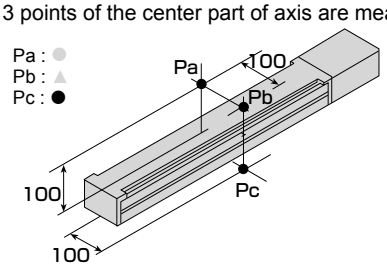

KBB-10 Cleanroom specification

[How to order]

KBB - 10 E - ST - M 20 N - 40 - C

Motor spec.	Axis type	Slider type	Lead	Brake	Basic stroke	Axis variation
E:Absolute 110W	ST :Straight axis UR :Right side mounted motor axis UL :Left side mounted motor axis UU :Bottom side mounted motor axis	M: Medium slider S: Short Slider	20: 20mm 10: 10mm 05: 5mm	N:Without brake	Medium slider: 10: 100mm, 20: 200mm to A0: 1000mm Short slider: 15: 150mm, 25: 250mm to A5: 1050mm	C: Clean room specification

[Dimensions]

Type: KBB - 10E - ST - □□□N - □□ C

Straight axis

Note 1: For more than stroke 700 mm, spacer is attached to the slider surface and it becomes 83 mm.

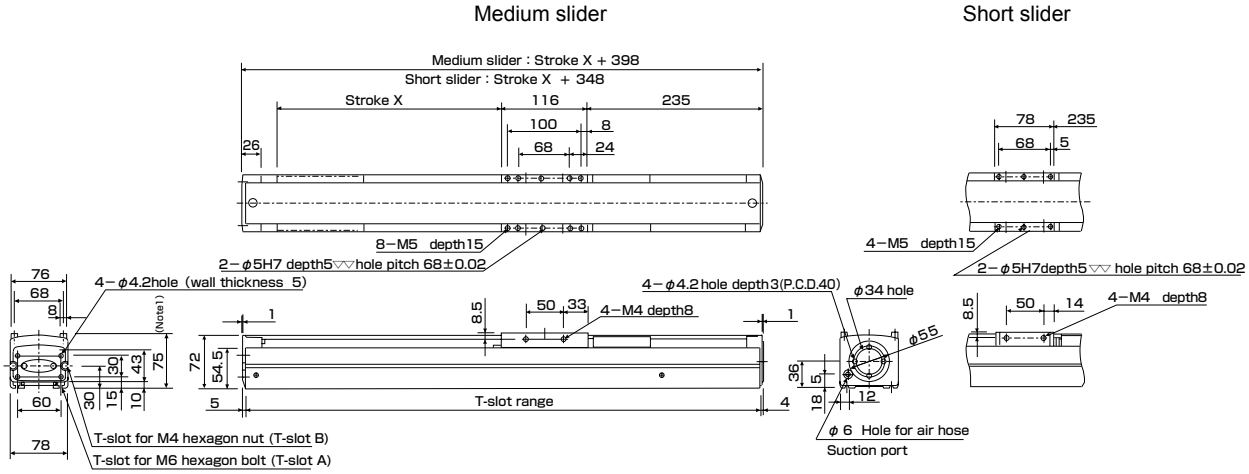

Type: KBB - 10E - UL - □□□N - □□ C

Left side mounted axis

Note 1: For more than stroke 700 mm, spacer is attached to the slider surface and it becomes 83 mm.
Note 2: For bottom side mounted axis, 35 becomes 50 and the total length becomes 15 mm longer.

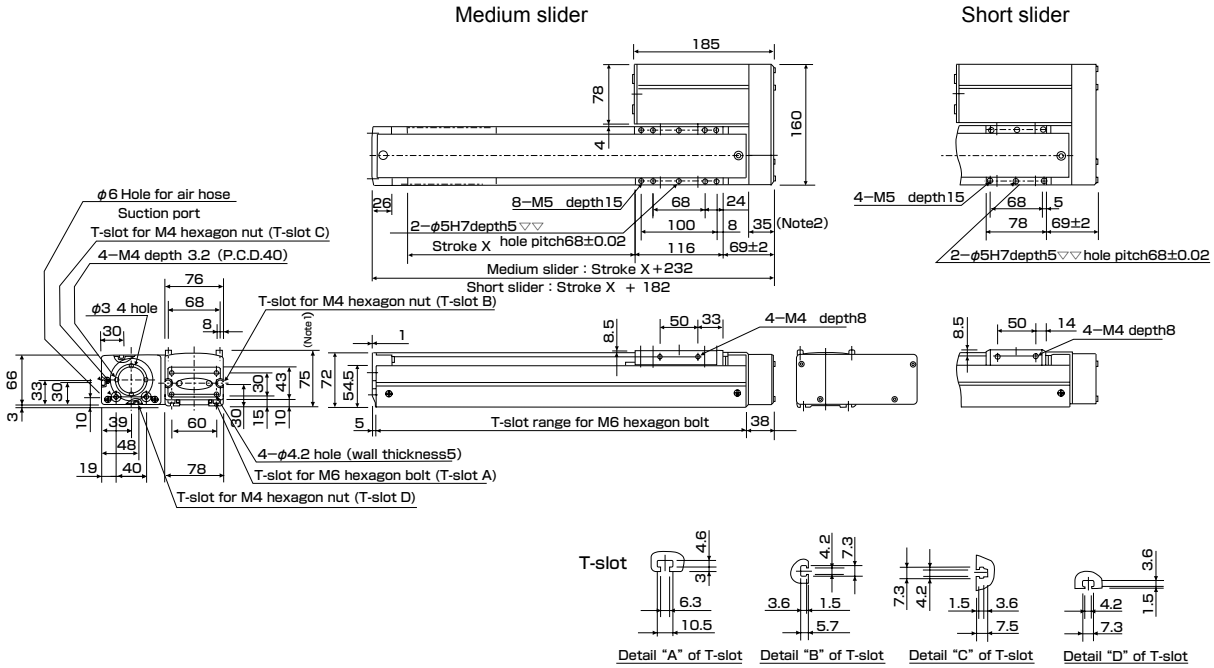

Discontinue

KBB-30 Cleanroom specification

[How to order]

KBB - 30 E - ST - M 20 N - 40 C

Motor spec.	Axis type	Slider type	Lead	Brake	Basic stroke	Axis variation
E: Absolute 100W F: Absolute 200W	ST : Straight axis UR : Right side mounted motor axis UL : Left side mounted motor axis UU : Bottom side mounted motor axis	M: Medium slider S: Short Slider	20: 20mm 10: 10mm 05: 5mm	N: Without brake	* Refer to the basic stroke of a standard axis.	C: Clean room specification

[Dimensions]

Type: KBB - 30 □ - ST - □□□N - □□ C

* The numbers in ( ) are for KBB-30F.

Straight axis

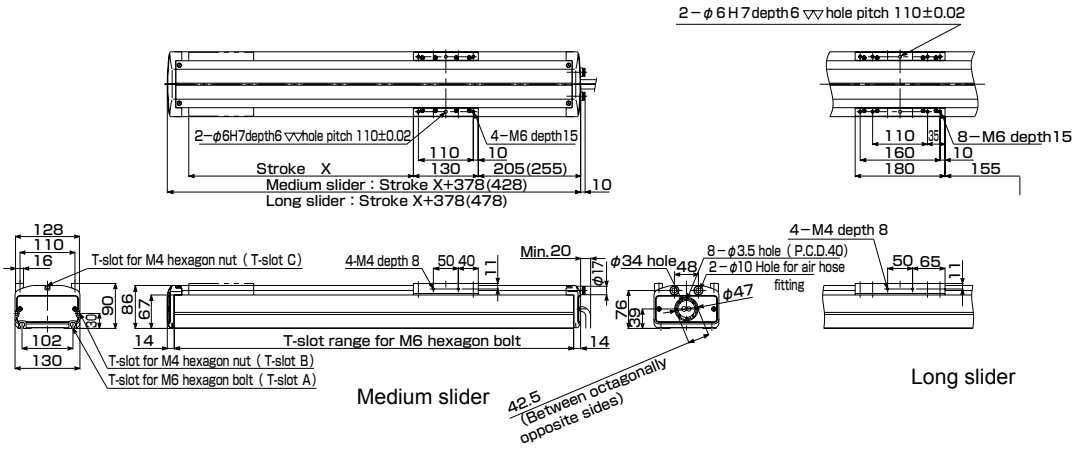

Type: KBB - 30 □ - UL - □□□N - □□ C

Left side mounted axis

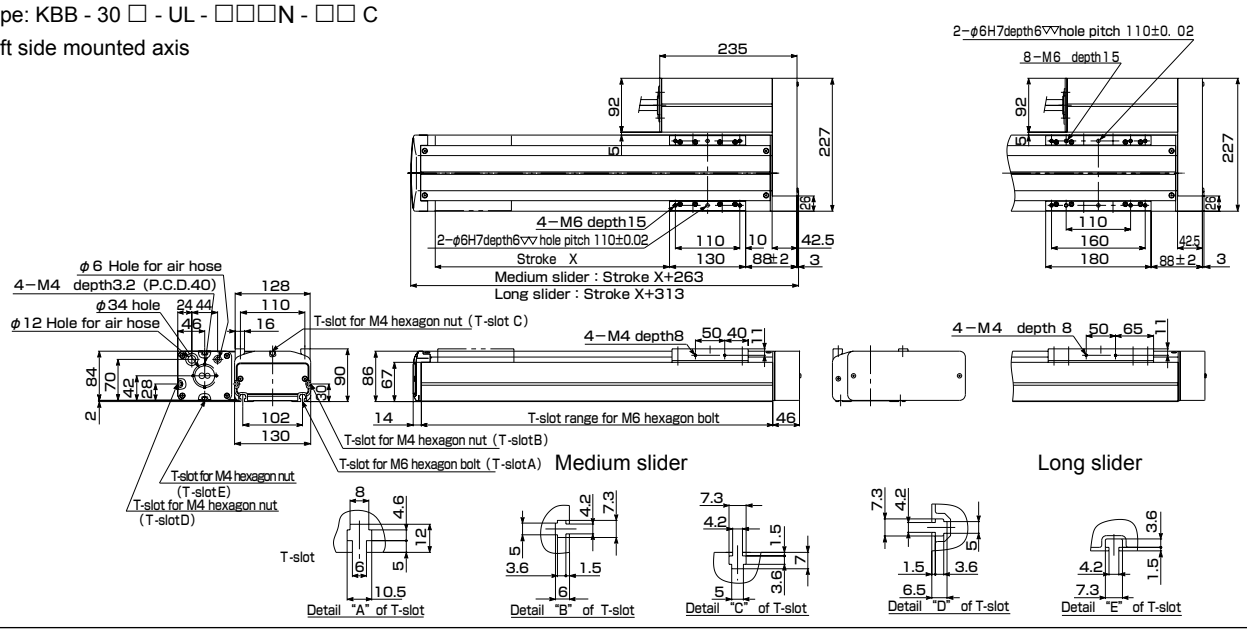

●Selection& Installation

* Right, left, bottom for mounting axis as standard.
* The opposite U shaped wiring is recommended for cable between axes to keep cleanness. Each CN box should be parallely not to twisted in stalled with the center of X axis.
* Contact the closet sales branch for details.

●Contact us for the following cases;

* Using under the conditions other than the specifications and equivalent to the cleanness measurement environment on this catalog.
* Using the orthogonal combination other than X-Y table combination.
* Considering an axis with brake.
* Hoping to know how big the dust is, as for the amount of the dust on the catalog.
* Desiring the cleanness specification model other than the models on the catalog.

Discontinue

Orthogonal Axes Specifications

Discontinue

Example of Orthogonal Axes Combination: X-Y

[Specifications]

	X-axis	Y-axis
Axis type	KBB-07D-ST-M12N-□□	KBB-05D-ST-M12N-□□
Stroke (in increments of 50 mm)	50 to 600mm	50 to 400mm
Max. speed	800mm/s (Note 1)	800mm/s
Positioning repeatability	±0.02mm	
Lead	12mm	12mm
Motor output	50W	50W
Resolution	0.01mm	

Acceleration/deceleration time when the maximum speed is set: 0.3 sec. or over

Ball screw type

X-axis: Ball screw driven
Motor straight
Y-axis: Ball screw driven
Motor straight

Note 1: When the stroke is as given below, the maximum speed differs.

	Stroke (mm)	Max. speed (mm/s)
X-axis	450 to 500	600
	550 to 600	400

Max. load capacity (kg)	Y-axis stroke							
	50mm	100mm	150mm	200mm	250mm	300mm	350mm	400mm
	5.0	5.0	4.0	4.0	2.0	2.0	1.0	1.0

R: Right-handed

Stroke X (BA07)	50	100	150	200	250	300	350	400	450	500	550	600
No. of holes B	4	4	6	6	8	8	10	10	12	12	14	14
Hole-to-hole pitch C	1	1	2	2	3	3	4	4	5	5	6	6

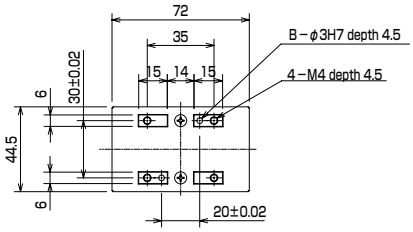

Y-axis slider unit

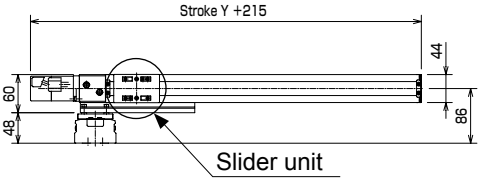

Slider unit

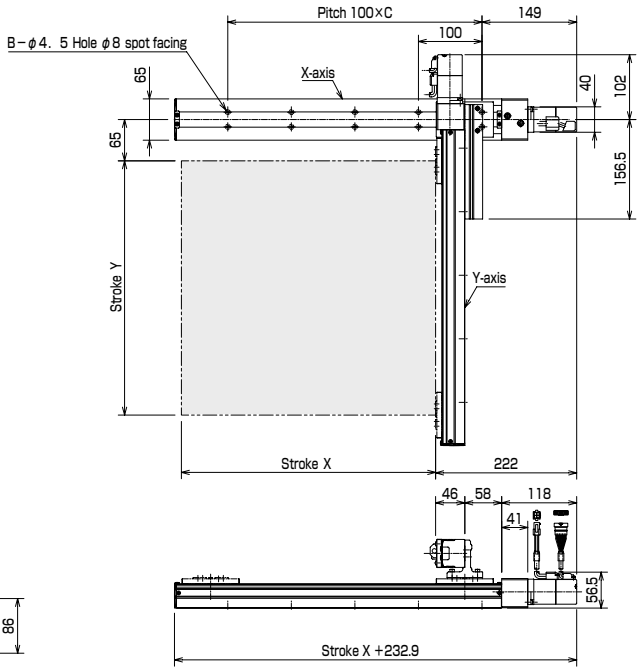

L: Left-handed

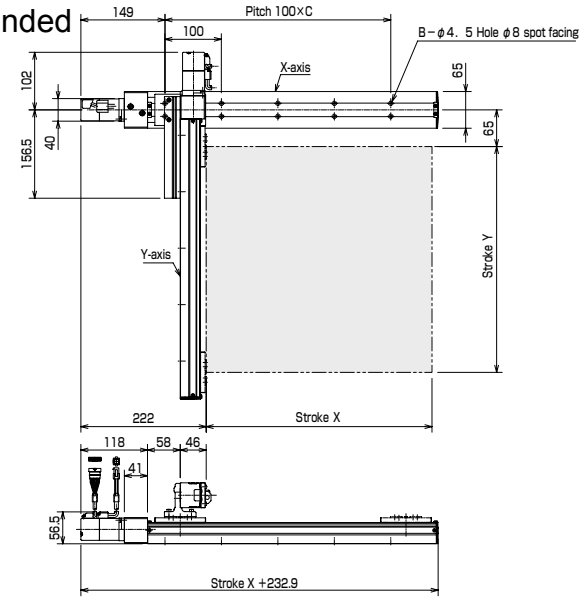

Slider unit

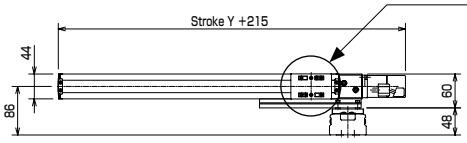

X-Y

Example of Orthogonal Axes Combination: X-Y Flexible duct spec

[Specifications]

	X-axis	Y-axis
Axis type	KBB-10E-ST-S20N-□5	KBB-07D-ST-M12N-□□
Stroke (in increments of 100 mm)	150 to 1050mm	50 to 400mm
Max. speed	1200mm/s (Note 1)	800mm/s
Positioning repeatability	±0.01mm	±0.02mm
Lead	20mm	12mm
Motor output	100W	50W
Resolution	0.01mm	

Acceleration/deceleration time when the maximum speed is set: 0.36 sec. or over

Ball screw type

X-axis: Ball screw driven
Motor straight
Y-axis: Ball screw driven
Motor straight

Note 1: When the stroke is as given below, the maximum speed differs.

	Stroke (mm)	Max. speed (mm/s)
X-axis	750	1000
	850	800
	950 to 1050	600

Max. load capacity (kg)	Y-axis stroke							
	50mm	100mm	150mm	200mm	250mm	300mm	350mm	400mm
	11.0	11.0	7.0	7.0	3.5	3.5	1.0	1.0

R: Right-handed

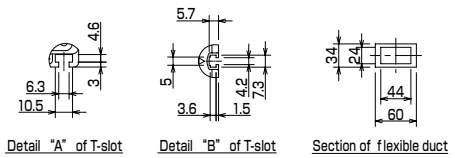

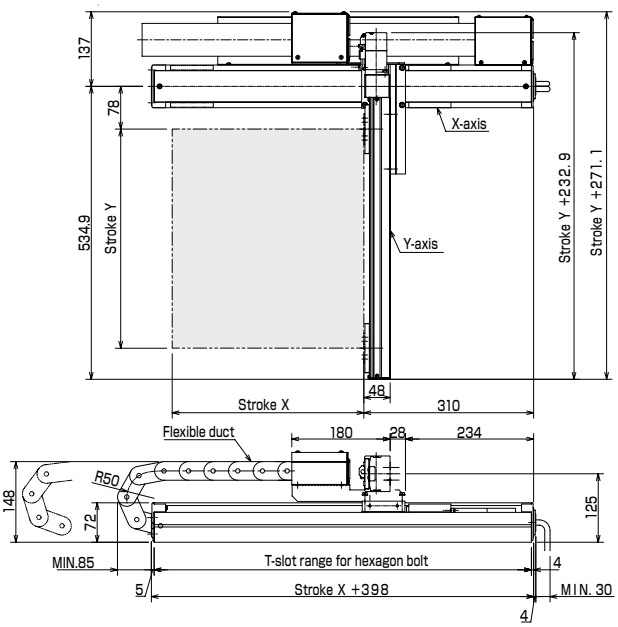

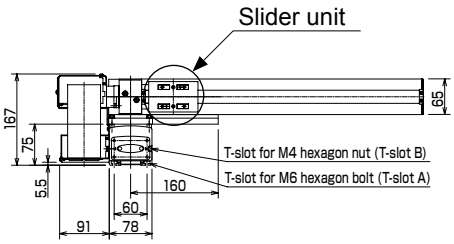

L: Left-handed

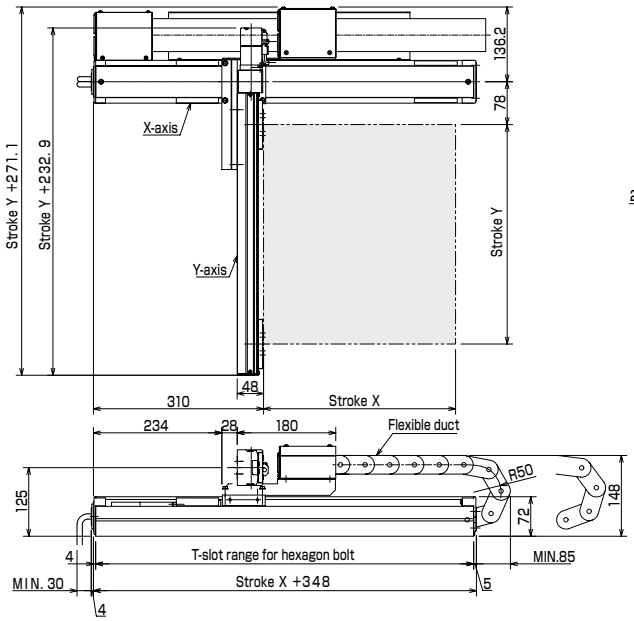

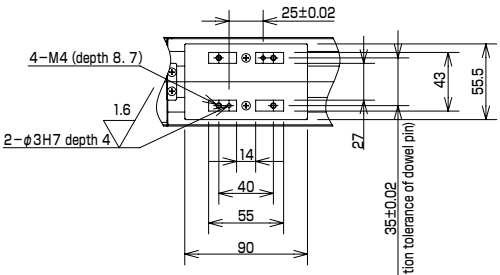

Y-axis slider unit

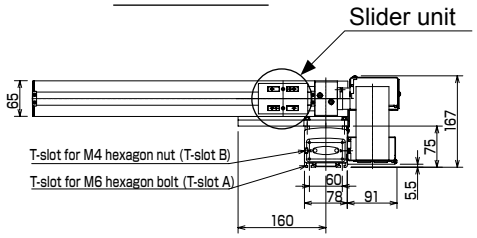

Discontinue

Example of Orthogonal Axes Combination: X-Y Flexible duct spec

[Specifications]

	X-axis	Y-axis
Axis type	KBB-10E-ST-M20N-□0	KBB-10E-ST-S20N-□5
Stroke (in increments of 100 mm)	100 to 1000mm	150 to 650mm
Max. speed	1200mm/s (Note 1)	1200mm/s
Positioning repeatability	±0.01mm	
Lead	20mm	20mm
Motor output	100W	100W
Resolution	0.01mm	

Acceleration/deceleration time when the maximum speed is set: 0.36 sec. or over

Ball screw type

X-axis: Ball screw driven
Motor straight
Y-axis: Ball screw driven
Motor straight

Note 1: When the stroke is as given below, the maximum speed differs.

	Stroke (mm)	Max. speed (mm/s)
X-axis	700	1000
	800	800
	900 to 1000	600

Max. load capacity (kg)	Y-axis stroke					
	150mm	250mm	350mm	450mm	550mm	650mm
	9.0	8.0	6.5	5.0	3.0	1.0

R: Right-handed

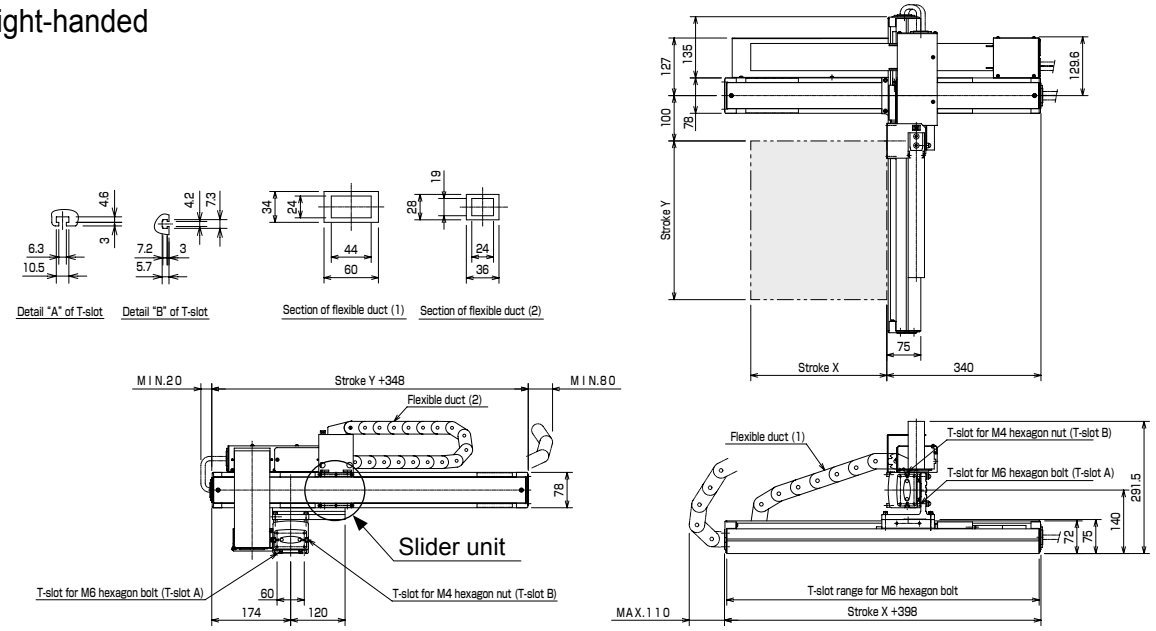

L: Left-handed

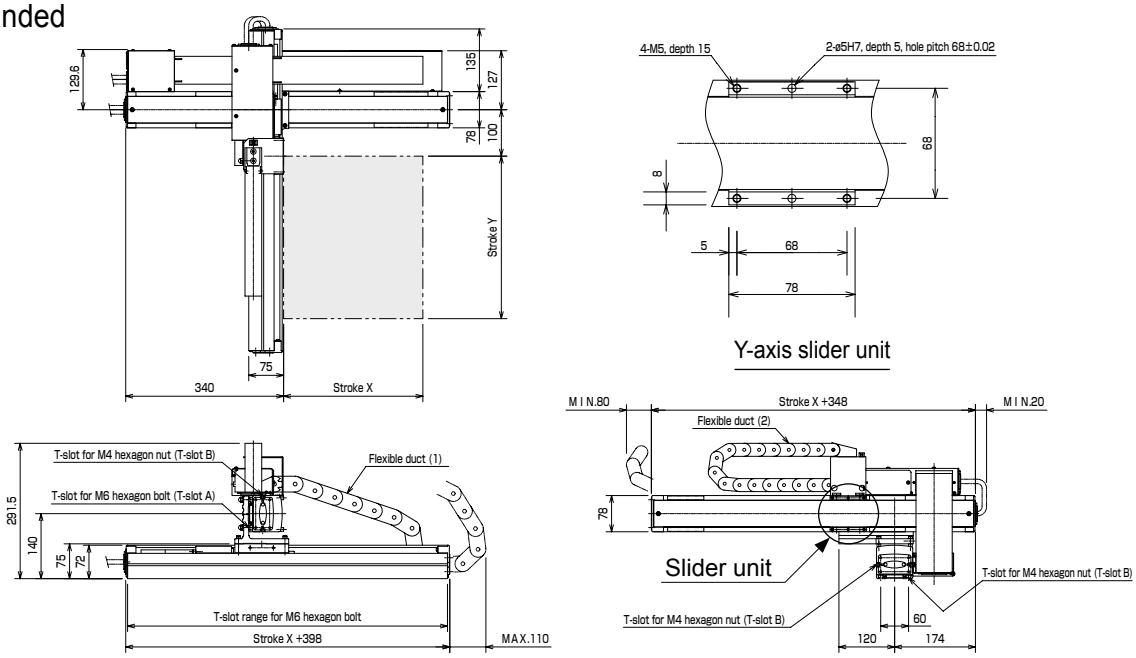

Example of Orthogonal Axes Combination: X-Y Flexible tube

[Specifications]

	X-axis	Y-axis
Axis type	KBB-10E-ST-M20N-□0	KBB-10E-ST-S20N-□5
Stroke (in increments of 100 mm)	100 to 1000mm	150 to 650mm
Max. speed	1200mm/s (Note 1)	1200mm/s
Positioning repeatability	±0.01mm	
Lead	20mm	20mm
Motor output	100W	100W
Resolution	0.01mm	

Acceleration/deceleration time when the maximum speed is set: 0.36 sec. or over

Ball screw type

X-axis: Ball screw driven
Motor straight
Y-axis: Ball screw driven
Motor straight

Note 1: When the stroke is as given below, the maximum speed differs.

	Stroke (mm)	Max. speed (mm/s)
X-axis	700	1000
	800	800
	900 to 1000	600

Max. load capacity (kg)	Y-axis stroke					
	150mm	250mm	350mm	450mm	550mm	650mm
	9.0	8.0	6.5	5.0	3.0	1.0

R: Right-handed

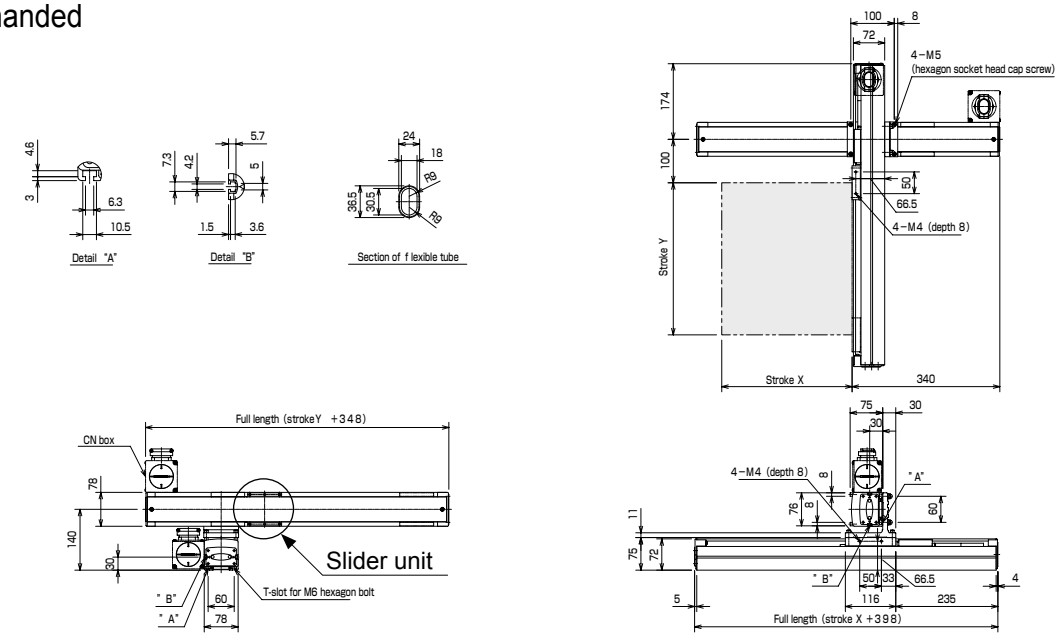

L: Left-handed

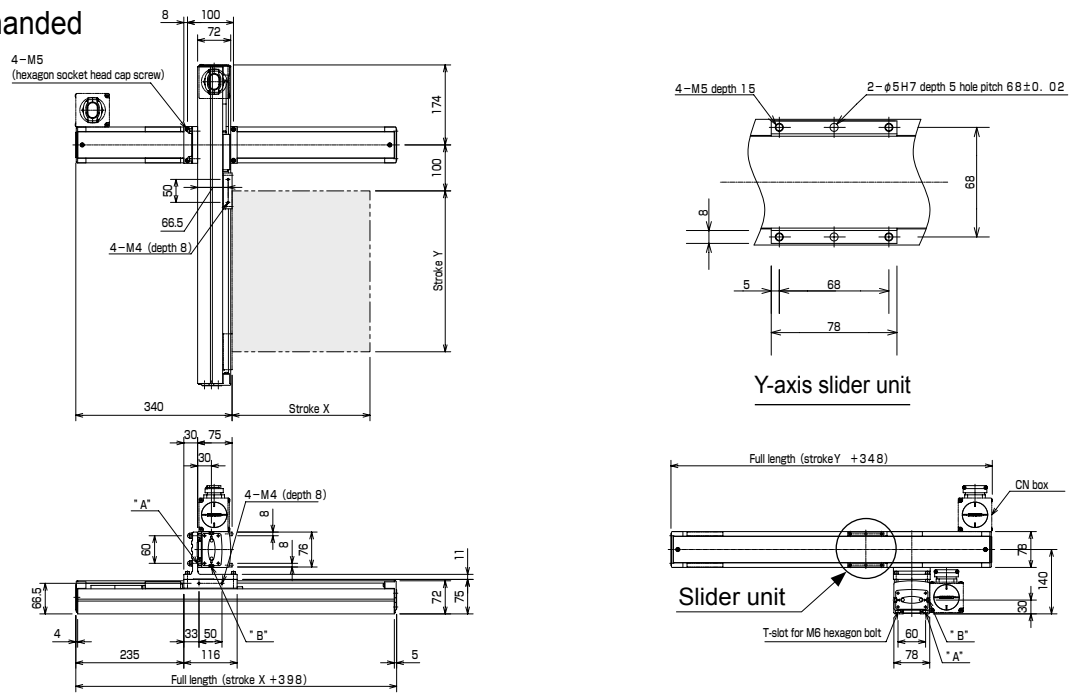

Discontinue

Example of Orthogonal Axes Combination: X-Y Flexible-duct Spec. Space-saving type

[Specifications]

	X-axis	Y-axis
Axis type	KBB-10E-U□-M20N-□0	KBB-10E-U□-S20N-□5
Stroke (in increments of 100 mm)	100 to 1000mm	150 to 650mm
Max. speed	1200mm/s (Note 1)	1200mm/s
Positioning repeatability	±0.01mm	
Lead	20mm	20mm
Motor output	100W	100W
Resolution	0.01mm	

Acceleration/deceleration time when the maximum speed is set: 0.36 sec. or over

Ball screw type

X-axis: Ball screw driven
Side mounted motor
Y-axis: Ball screw driven
Side mounted motor

Note 1: When the stroke is as given below, the maximum speed differs.

	Stroke (mm)	Max. speed (mm/s)
X-axis	700	1000
	800	800
	900 to 1000	600

Max. load capacity (kg)	Y-axis stroke					
	150mm	250mm	350mm	450mm	550mm	650mm
	9.0	8.0	6.5	5.0	3.0	1.0

Note: When the X-axis stroke is less than 300 mm, no flexible tray is necessary.

R: Right-handed

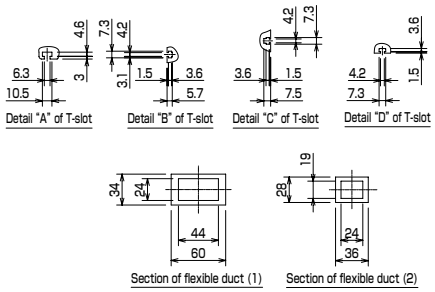

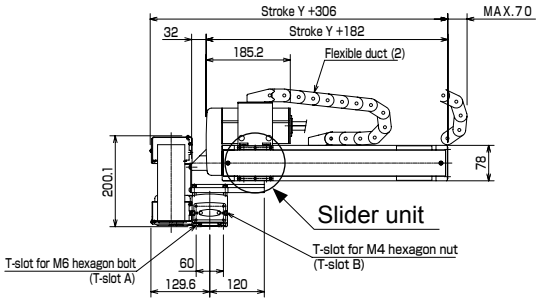

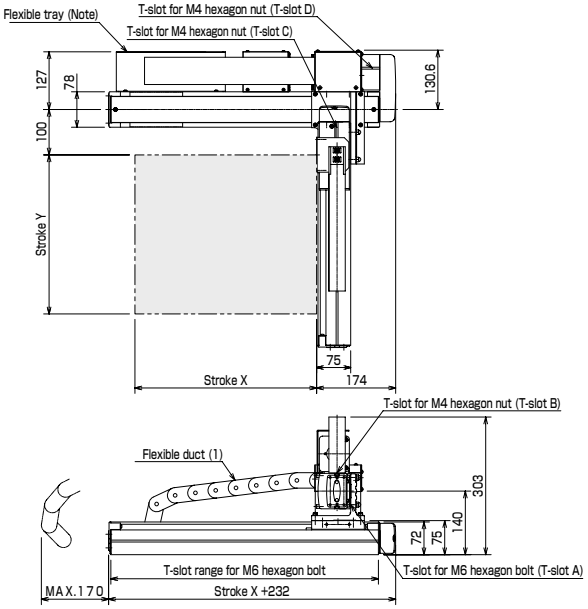

L: Left-handed

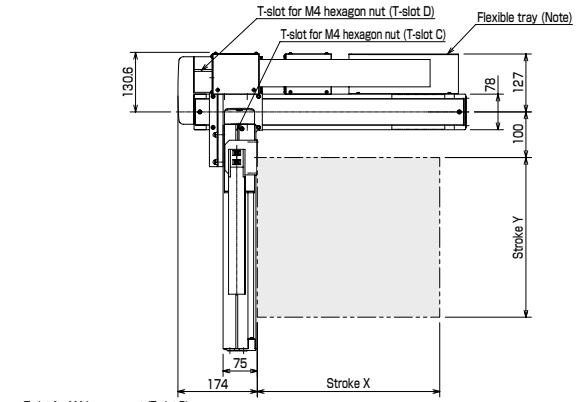

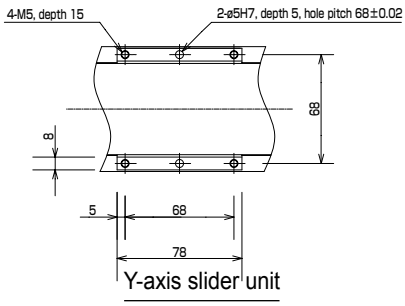

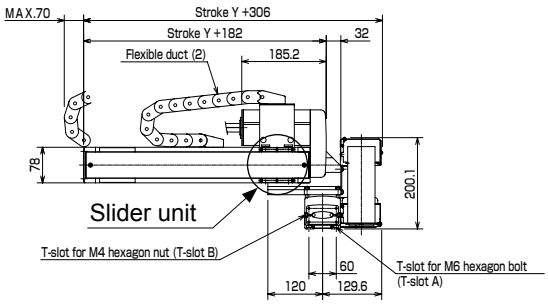

Example of Orthogonal Axes Combination: X-Y Flexible-duct Spec. Space-saving type

[Specifications]

	X-axis	Y-axis
Axis type	KBB-10E-U□-M20N-□0	KBB-10E-U□-S20N-□5
Stroke (in increments of 100 mm)	100 to 1000mm	150 to 650mm
Max. speed	1200mm/s (Note 1)	1200mm/s
Positioning repeatability	±0.01mm	
Lead	20mm	20mm
Motor output	100W	100W
Resolution	0.01mm	

Acceleration/deceleration time when the maximum speed is set: 0.36 sec. or over

Ball screw type

X-axis: Ball screw driven
Side mounted motor
Y-axis: Ball screw driven
Side mounted motor

Note 1: When the stroke is as given below, the maximum speed differs.

	Stroke (mm)	Max. speed (mm/s)
X-axis	700	1000
	800	800
	900 to 1000	600

Max. load capacity (kg)	Y-axis stroke					
	150mm	250mm	350mm	450mm	550mm	650mm
	9.0	8.0	6.5	5.0	3.0	1.0

R: Right-handed

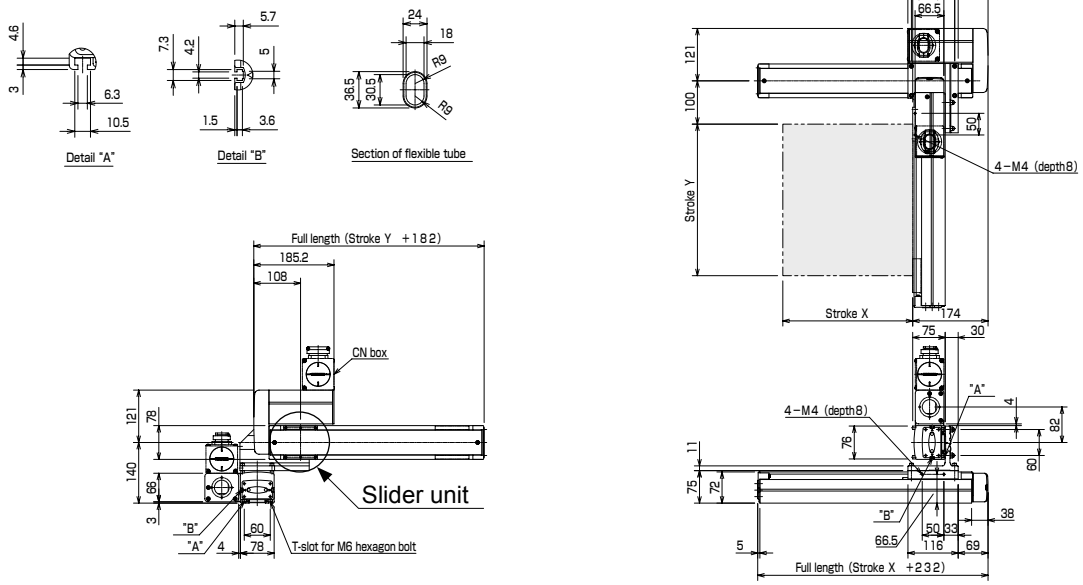

L: Left-handed

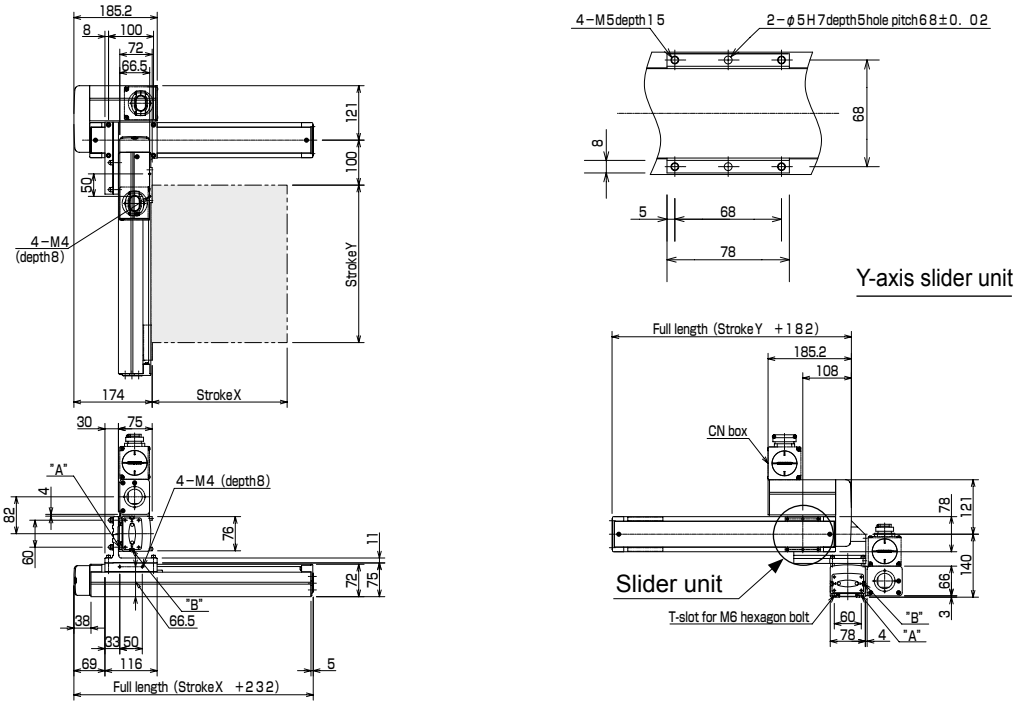

Discontinue

Example of Orthogonal Axes Combination: X-Y Flexible duct spec

[Specifications]

	X-axis	Y-axis
Axis type	KBB-30E-ST-M20N-□5	KBB-10E-ST-M20N-□0
Stroke (in increments of 100 mm)	150 to 1050mm	100 to 800mm
Max. speed	1200mm/s (Note 1)	1200mm/s (Note 1)
Positioning repeatability	±0.01mm	
Lead	20mm	20mm
Motor output	100W	100W
Resolution	0.01mm	

Acceleration/deceleration time when the maximum speed is set: 0.48 sec. or over

Ball screw type

X-axis: Ball screw driven
Motor straight
Y-axis: Ball screw driven
Motor straight

Note 1: When the stroke is as given below, the maximum speed differs.

	Stroke (mm)	Max. speed (mm/s)
X-axis	750	1000
	850	800
	950 to 1050	600
Y-axis	700	1000
	800	800

Max. load capacity (kg)	Y-axis stroke							
	100mm	200mm	300mm	400mm	500mm	600mm	700mm	800mm
	13.0	12.0	11.0	10.0	8.0	6.0	3.0	2.0

R: Right-handed

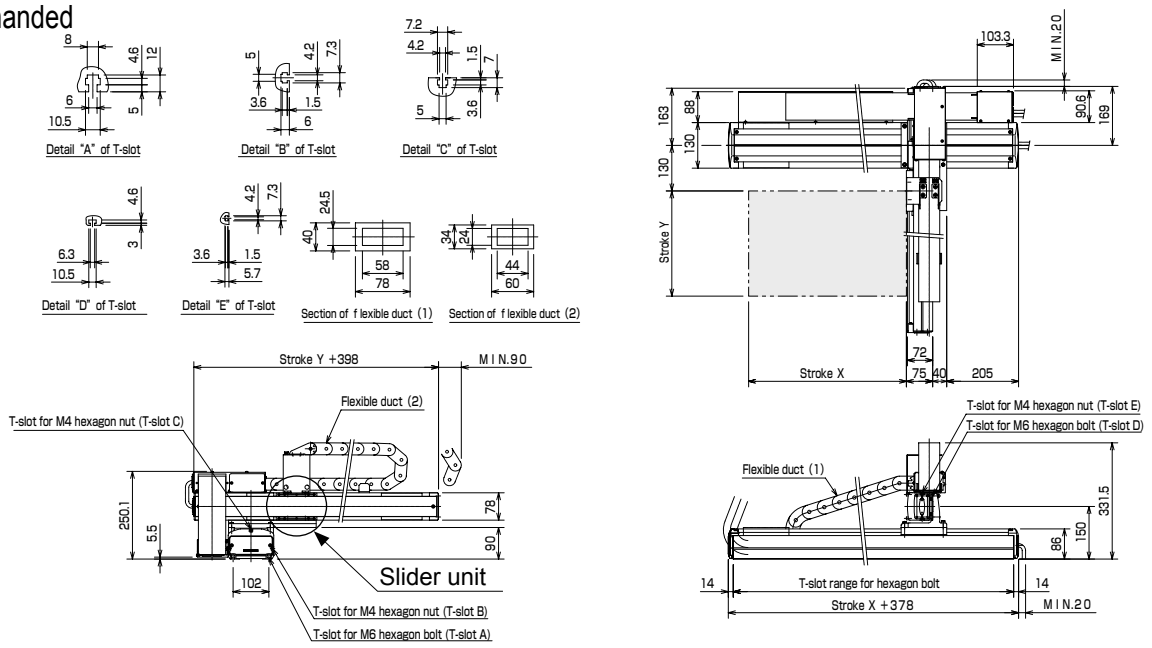

L: Left-handed

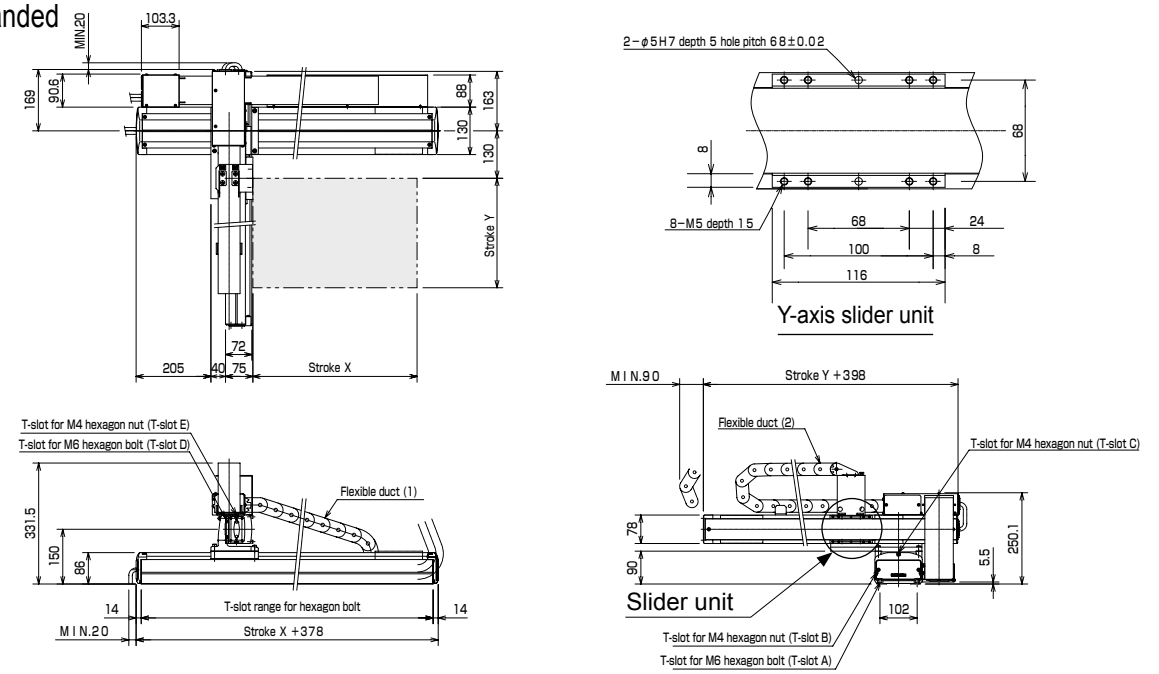

Example of Orthogonal Axes Combination: X-Y Flexible tube

[Specifications]

	X-axis	Y-axis
Axis type	KBB-30E-ST-M20N-□5	KBB-10E-ST-M20N-□0
Stroke (in increments of 100 mm)	150 to 1050mm	100 to 800mm
Max. speed	1200mm/s (Note 1)	1200mm/s (Note 1)
Positioning repeatability	±0.01mm	
Lead	20mm	20mm
Motor output	100W	100W
Resolution	0.01mm	

Acceleration/deceleration time when the maximum speed is set: 0.48 sec. or over

Ball screw type

X-axis: Ball screw driven
Motor straight
Y-axis: Ball screw driven
Motor straight

Note 1: When the stroke is as given below, the maximum speed differs.

	Stroke (mm)	Max. speed (mm/s)
X-axis	750	1000
	850	800
	950 to 1050	600
Y-axis	700	1000
	800	800

Max. load capacity (kg)	Y-axis stroke							
	100mm	200mm	300mm	400mm	500mm	600mm	700mm	800mm
	13.0	12.0	11.0	10.0	8.0	6.0	3.0	2.0

R: Right-handed

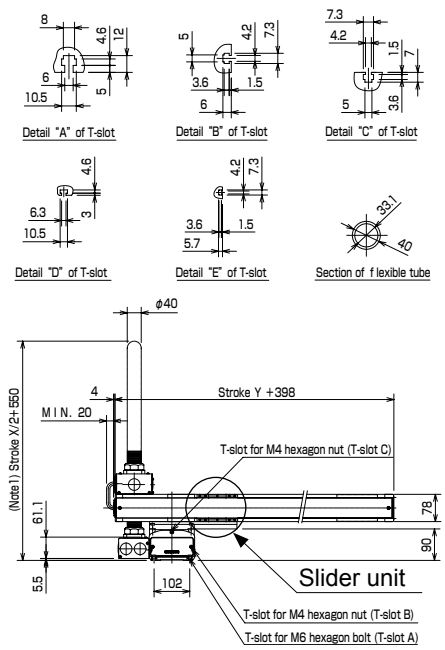

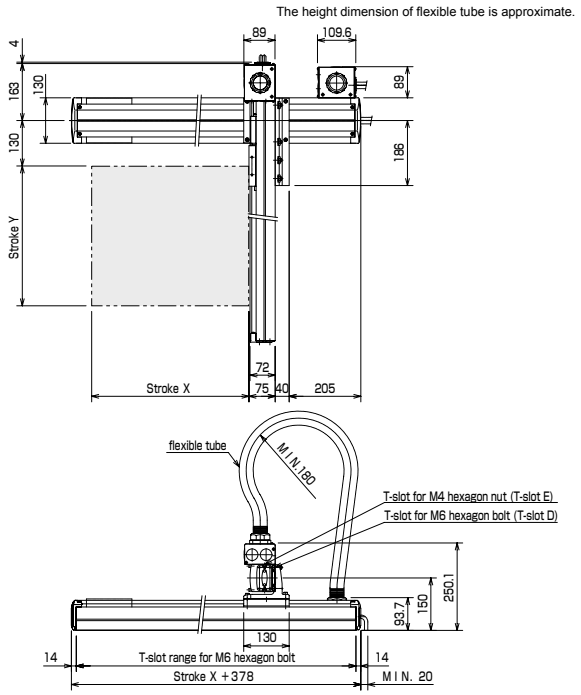

L: Left-handed

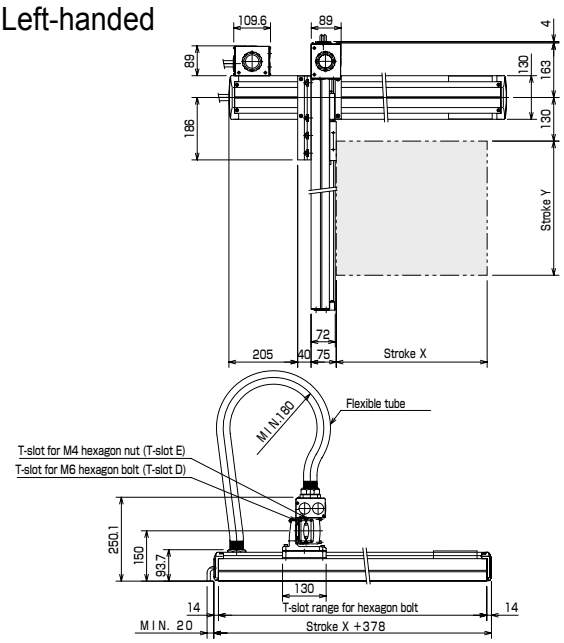

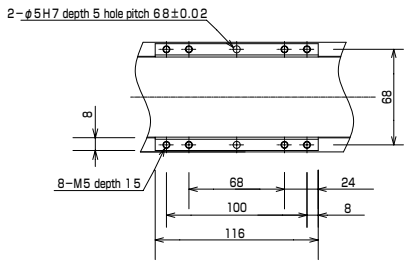

Y-axis slider unit

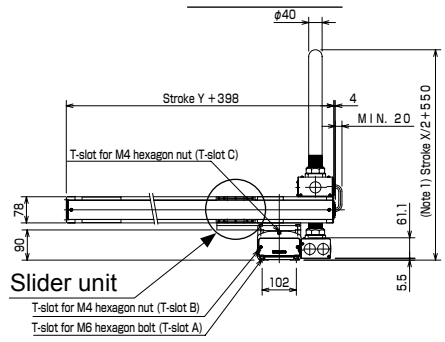

Discontinue

Example of Orthogonal Axes Combination: X-Y Flexible tube

[Specifications]

	X-axis	Y-axis
Axis type	KBB-30E-U□-M20N-□0	KBB-10E-U□-M20N-□0
Stroke (in increments of 100 mm)	100 to 1000mm	100 to 800mm
Max. speed	1200mm/s (Note 1)	1200mm/s (Note 1)
Positioning repeatability	±0.01mm	
Lead	20mm	20mm
Motor output	100W	100W
Resolution	0.01mm	

Acceleration/deceleration time when the maximum speed is set: 0.48 sec. or over

Ball screw type

X-axis: Ball screw driven
Motor straight
Y-axis: Ball screw driven
Motor straight

Note 1: When the stroke is as given below, the maximum speed differs.

	Stroke (mm)	Max. speed (mm/s)
X-axis	700	1000
	800	800
	900 to 1000	600
Y-axis	700	1000
	800	800

Max. load capacity (kg)	Y-axis stroke							
	100mm	200mm	300mm	400mm	500mm	600mm	700mm	800mm
	13.0	12.0	11.0	10.0	8.0	6.0	3.0	2.0

R: Right-handed

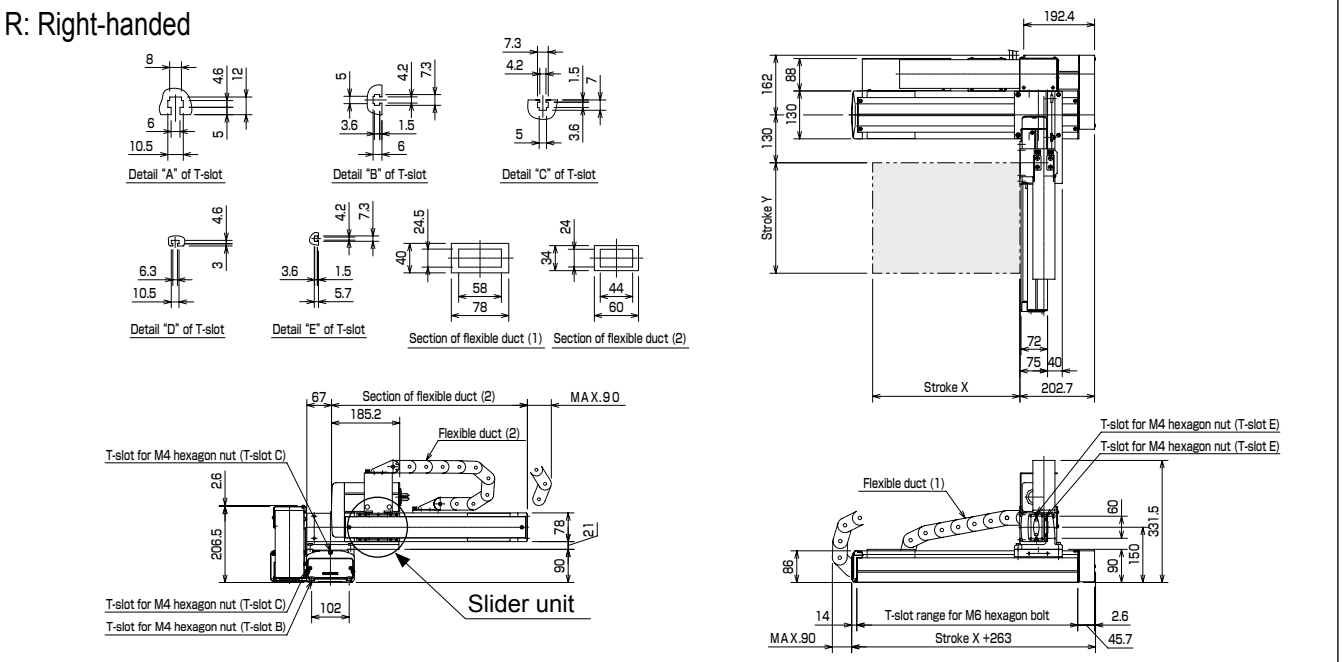

L: Left-handed

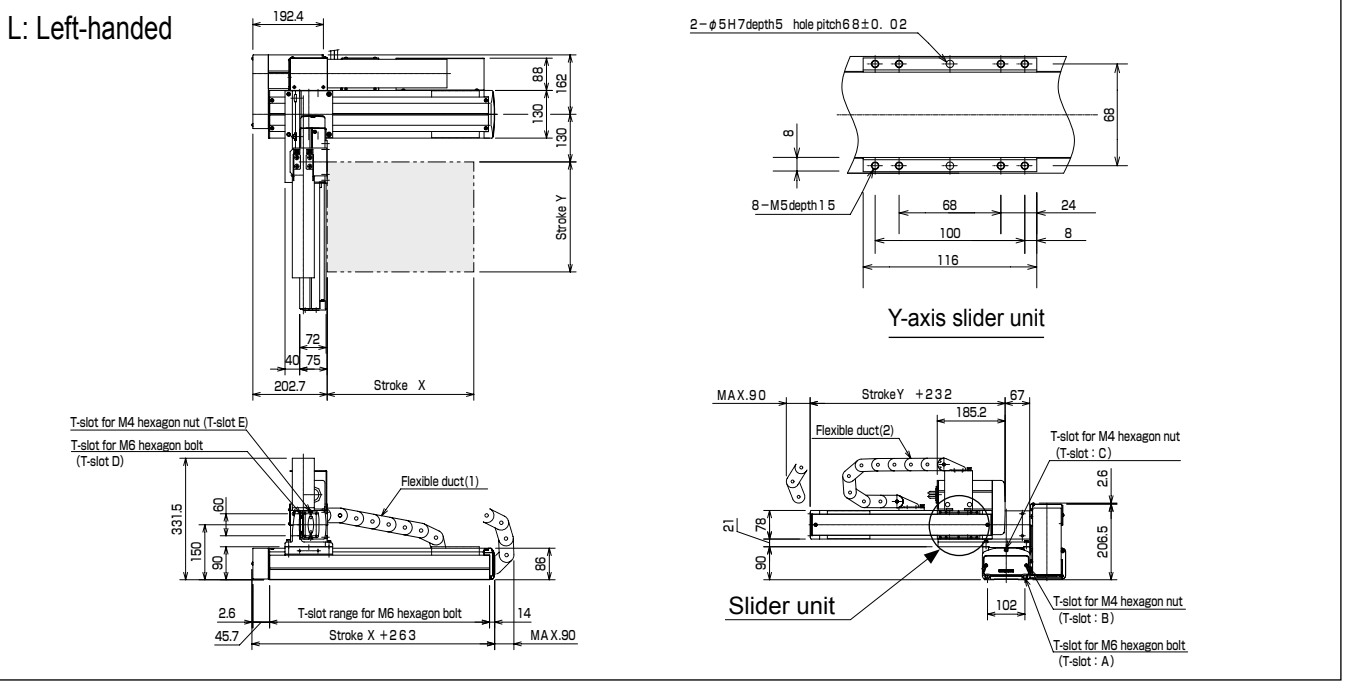

Example of Orthogonal Axes Combination: X-Y Flexible tube

[Specifications]

	X-axis	Y-axis
Axis type	KBB-30E-U□-M20N-□0	KBB-10E-U□-M20N-□0
Stroke (in increments of 100 mm)	100 to 1000mm	100 to 800mm
Max. speed	1200mm/s (Note 1)	1200mm/s (Note 1)
Positioning repeatability	±0.01mm	
Lead	20mm	20mm
Motor output	100W	100W
Resolution	0.01mm	

Acceleration/deceleration time when the maximum speed is set: 0.48 sec. or over

Ball screw type

X-axis: Ball screw driven
Motor straight
Y-axis: Ball screw driven
Motor straight

Note 1: When the stroke is as given below, the maximum speed differs.

	Stroke (mm)	Max. speed (mm/s)
X-axis	700	1000
	800	800
	900 to 1000	600
Y-axis	700	1000
	800	800

Max. load capacity (kg)	Y-axis stroke							
	100mm	200mm	300mm	400mm	500mm	600mm	700mm	800mm
	13.0	12.0	11.0	10.0	8.0	6.0	3.0	2.0

R: Right-handed

The height dimension of flexible tube is approximate.

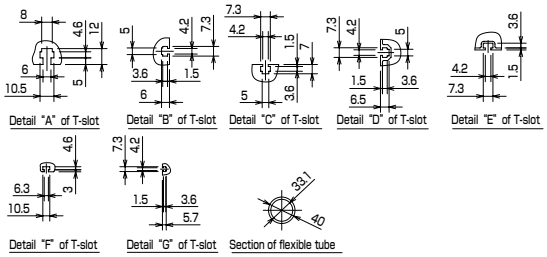

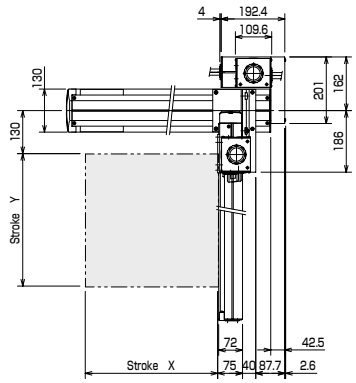

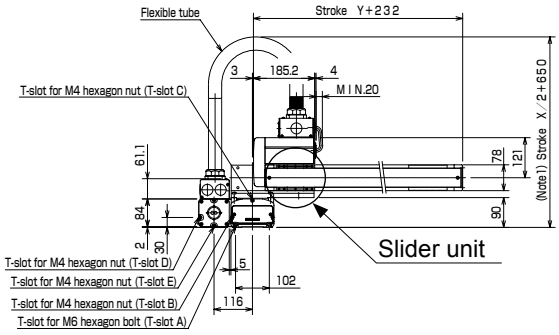

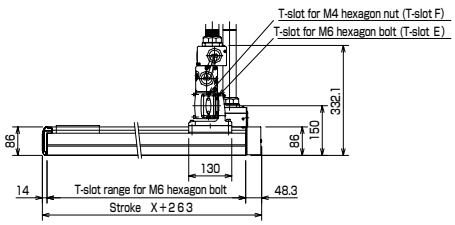

L: Left-handed

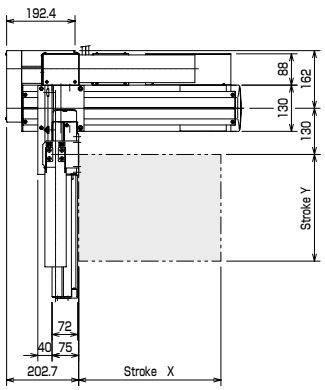

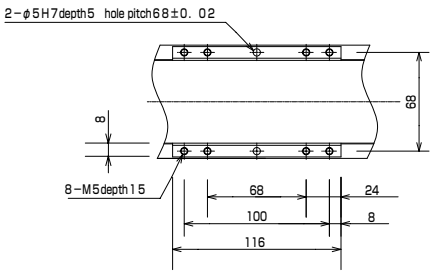

Y-axis slider unit

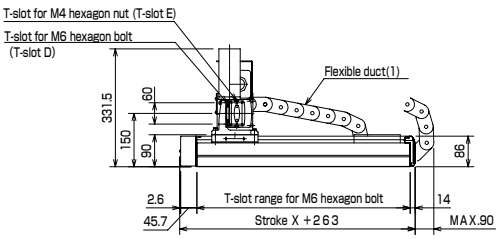

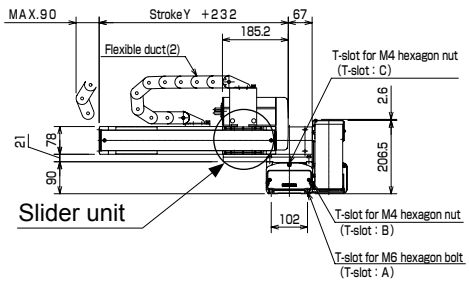

Discontinue

Example of Orthogonal Axes Combination: X-Y Flexible duct spec

[Specifications]

	X-axis	Y-axis
Axis type	KBB-30F-ST-M20N-□0	KBB-10E-ST-M20N-□0
Stroke (in increments of 100 mm)	100 to 1000mm	100 to 800mm
Max. speed	1200mm/s (Note 1)	1200mm/s (Note 1)
Positioning repeatability	±0.01mm	
Lead	20mm	20mm
Motor output	200W	100W
Resolution	0.01mm	

Acceleration/deceleration time when the maximum speed is set: 0.36 sec. or over

Ball screw type

X-axis: Ball screw driven
Motor straight
Y-axis: Ball screw driven
Motor straight

Note 1: When the stroke is as given below, the maximum speed differs.

	Stroke (mm)	Max. speed (mm/s)
X-axis	700	1000
	800	800
	900 to 1000	600
Y-axis	700	1000
	800	800

Max. load capacity (kg)	Y-axis stroke							
	100mm	200mm	300mm	400mm	500mm	600mm	700mm	800mm
	15.0	15.0	14.0	11.0	8.0	6.0	4.0	2.0

R: Right-handed

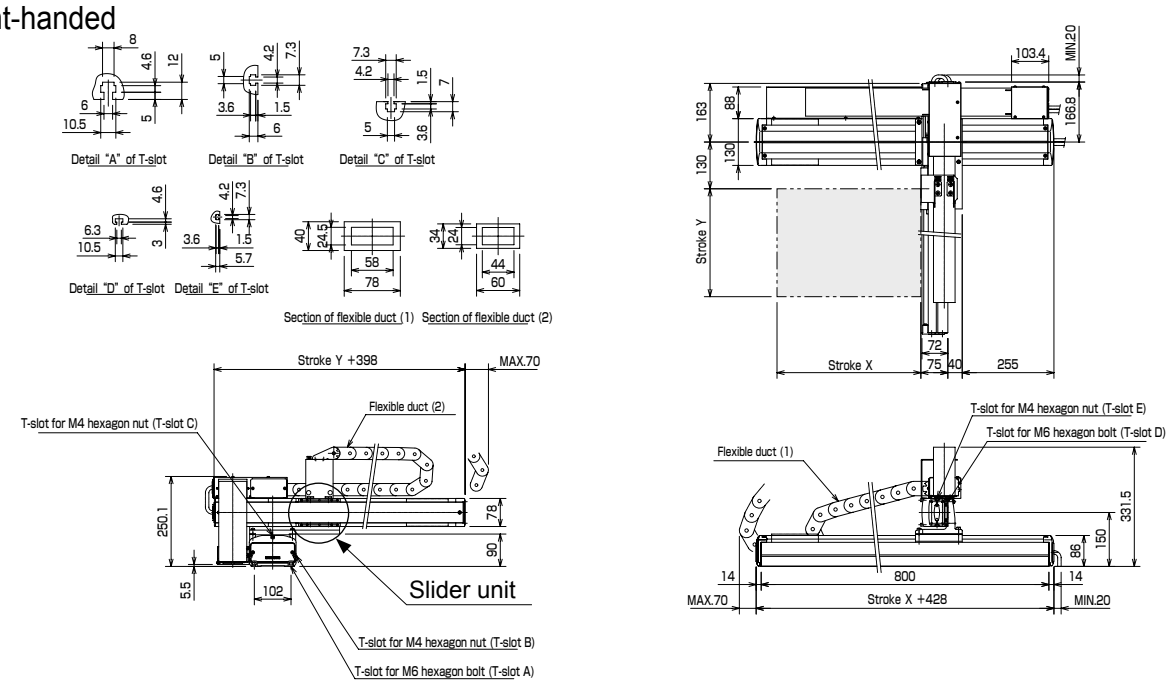

L: Left-handed

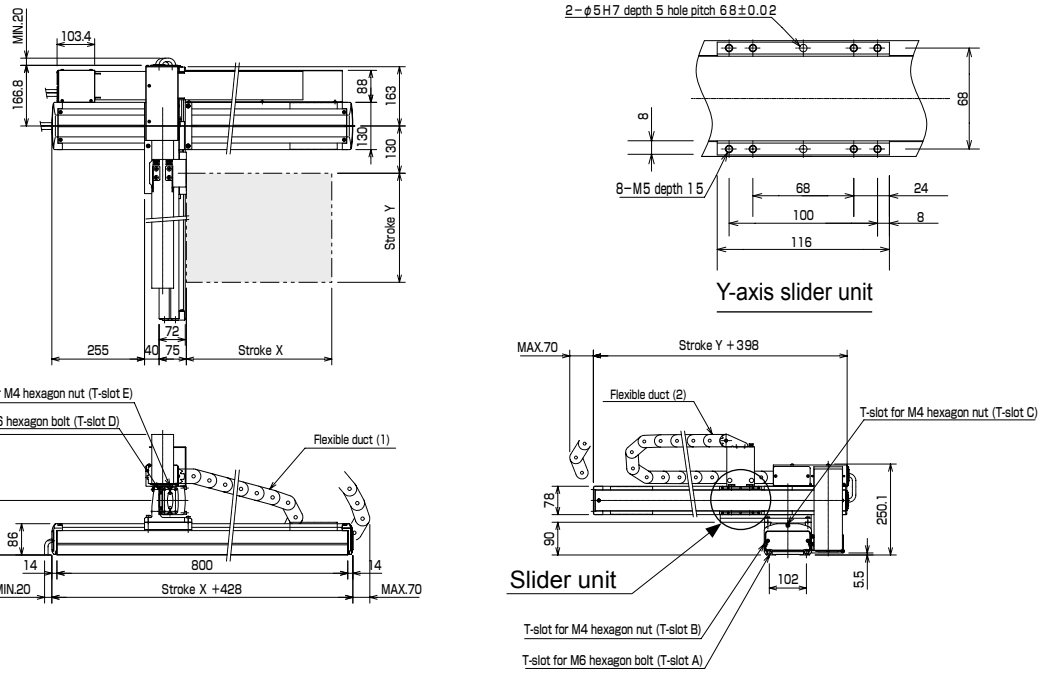

Example of Orthogonal Axes Combination: X-Y Flexible duct spec

[Specifications]

	X-axis	Y-axis
Axis type	KBB-30F-ST-M20N-□0	KBB-10E-ST-M20N-□0
Stroke (in increments of 100 mm)	100 to 1000mm	100 to 800mm
Max. speed	1200mm/s (Note 1)	1200mm/s (Note 1)
Positioning repeatability	±0.01mm	
Lead	20mm	20mm
Motor output	200W	100W
Resolution	0.01mm	

Acceleration/deceleration time when the maximum speed is set: 0.36 sec. or over

Ball screw type

X-axis: Ball screw driven
Motor straight
Y-axis: Ball screw driven
Motor straight

Note 1: When the stroke is as given below, the maximum speed differs.

	Stroke (mm)	Max. speed (mm/s)
X-axis	700	1000
	800	800
	900 to 1000	600
Y-axis	700	1000
	800	800

Max. load capacity (kg)	Y-axis stroke							
	100mm	200mm	300mm	400mm	500mm	600mm	700mm	800mm
	15.0	15.0	14.0	11.0	8.0	6.0	4.0	2.0

R: Right-handed

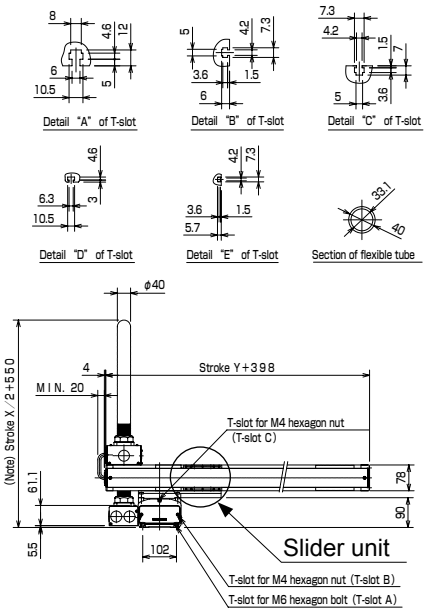

The height dimension of flexible tube is approximate.

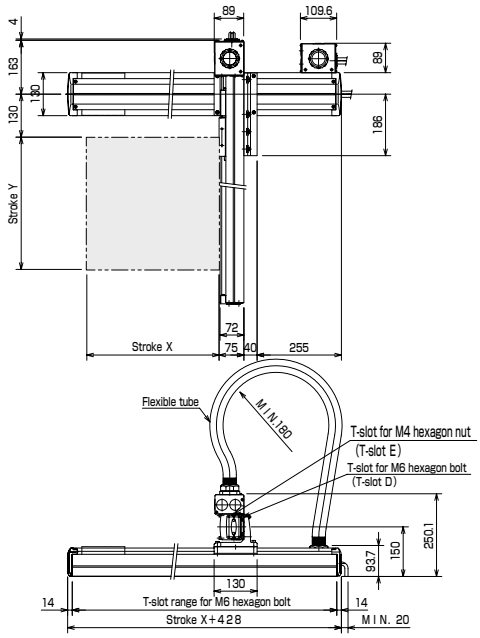

L: Left-handed

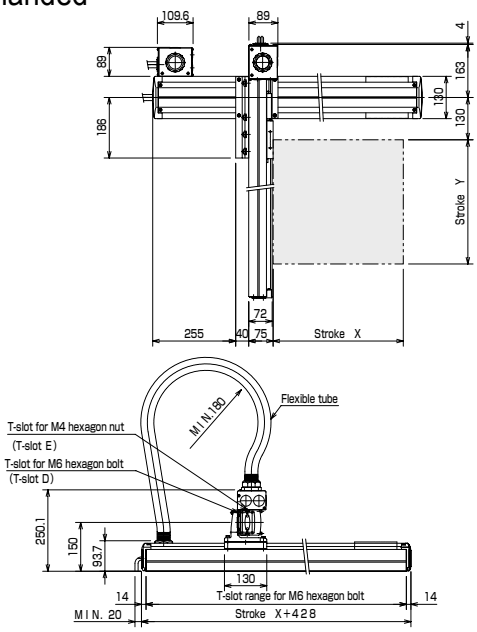

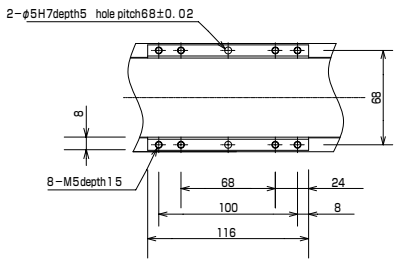

Y-axis slider unit

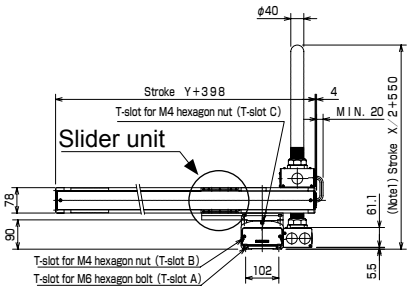

Discontinue

Example of Orthogonal Axes Combination: X-Y Flexible duct spec Space-saving type

[Specifications]

	X-axis	Y-axis
Axis type	KBB-30F-U□-M20N-□0	KBB-10E-U□-M20N-□0
Stroke (in increments of 100 mm)	100 to 1000mm	100 to 800mm
Max. speed	1200mm/s (Note 1)	1200mm/s (Note 1)
Positioning repeatability	±0.01mm	
Lead	20mm	20mm
Motor output	200W	100W
Resolution	0.01mm	

Acceleration/deceleration time when the maximum speed is set: 0.36 sec. or over

Ball screw type

X-axis: Ball screw driven
Side mounted motor
Y-axis: Ball screw driven
Side mounted motor

Note 1: When the stroke is as given below, the maximum speed differs.

	Stroke (mm)	Max. speed (mm/s)
X-axis	700	1000
	800	800
	900 to 1000	600
Y-axis	700	1000
	800	800

Max. load capacity (kg)	Y-axis stroke							
	100mm	200mm	300mm	400mm	500mm	600mm	700mm	800mm
	15.0	15.0	14.0	11.0	8.0	6.0	4.0	2.0

R: Right-handed

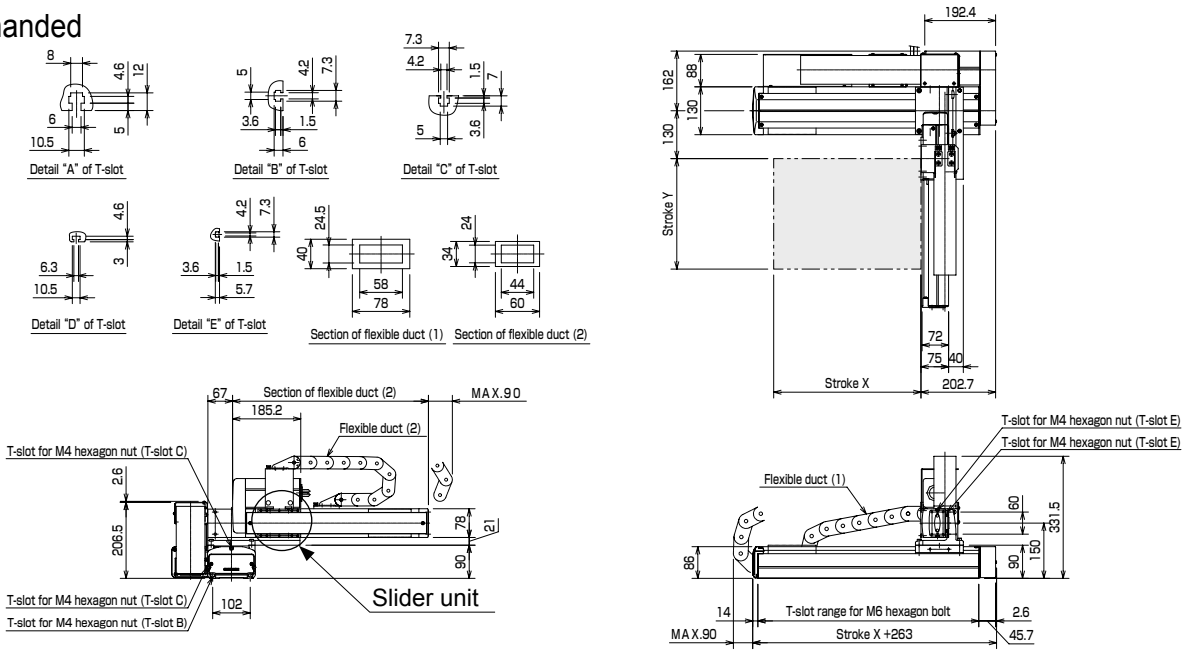

L: Left-handed

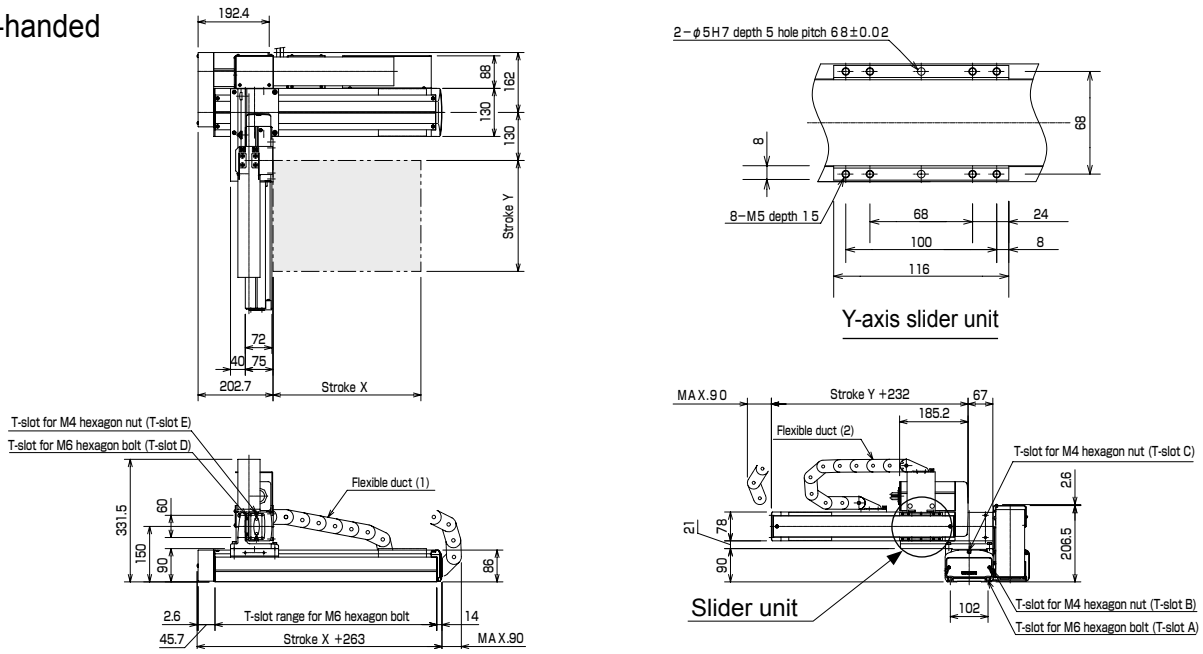

Example of Orthogonal Axes Combination: X-Y Flexible duct spec Space-saving type

[Specifications]

	X-axis	Y-axis
Axis type	KBB-30F-U□-M20N-□0	KBB-10E-U□-M20N-□0
Stroke (in increments of 100 mm)	100 to 1000mm	100 to 800mm
Max. speed	1200mm/s (Note 1)	1200mm/s (Note 1)
Positioning repeatability	±0.01mm	
Lead	20mm	20mm
Motor output	200W	100W
Resolution	0.01mm	

Acceleration/deceleration time when the maximum speed is set: 0.36 sec. or over

Ball screw type

X-axis: Ball screw driven
Side mounted motor
Y-axis: Ball screw driven
Side mounted motor

Note 1: When the stroke is as given below, the maximum speed differs.

	Stroke (mm)	Max. speed (mm/s)
X-axis	700	1000
	800	800
	900 to 1000	600
Y-axis	700	1000
	800	800

Max. load capacity (kg)	Y-axis stroke							
	100mm	200mm	300mm	400mm	500mm	600mm	700mm	800mm
	15.0	15.0	14.0	11.0	8.0	6.0	4.0	2.0

R: Right-handed

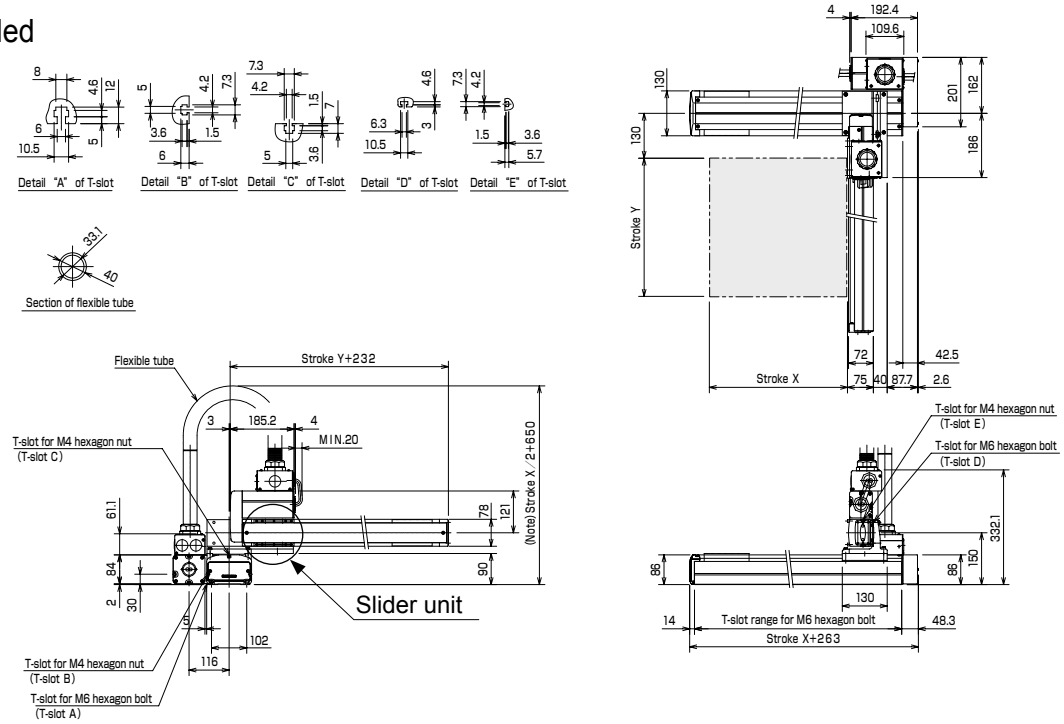

L: Left-handed

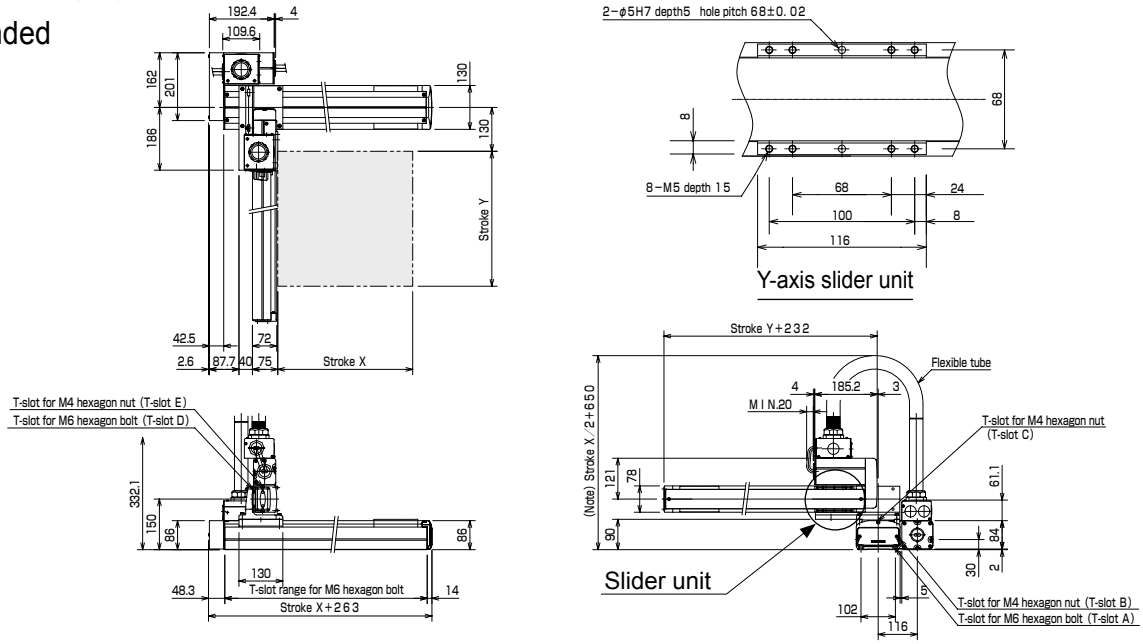

Discontinue

Example of Orthogonal Axes Combination: X-Y Flexible duct spec

[Specifications]

	X-axis	Y-axis
Axis type	KBB-50F-ST-M20N-□0	KBB-30E-ST-M20N-□5
Stroke (in increments of 100 mm)	200 to 1500mm	150 to 1050mm
Max. speed	1200mm/s (Note 1)	1200mm/s (Note 1)
Positioning repeatability	±0.01mm	
Lead	20mm	20mm
Motor output	200W	100W
Resolution	0.01mm	

Acceleration/deceleration time when the maximum speed is set: 0.36 sec. or over

Ball screw type

X-axis: Ball screw driven
Motor straight
Y-axis: Ball screw driven
Motor straight

Note 1: When the stroke is as given below, the maximum speed differs.

	Stroke (mm)	Max. speed (mm/s)
X-axis	700 to 800	1100
	900 to 1000	1000
	1100 to 1200	700
	1300	500
	1400	400
	1500	300
Y-axis	750	1000
	850	800
	950 to 1050	600

Max. load capacity (kg)	Y-axis stroke									
	150mm	250mm	350mm	450mm	550mm	650mm	750mm	850mm	950mm	1050mm
	20.0	20.0	20.0	20.0	20.0	20.0	19.0	17.0	14.0	11.0

R: Right-handed

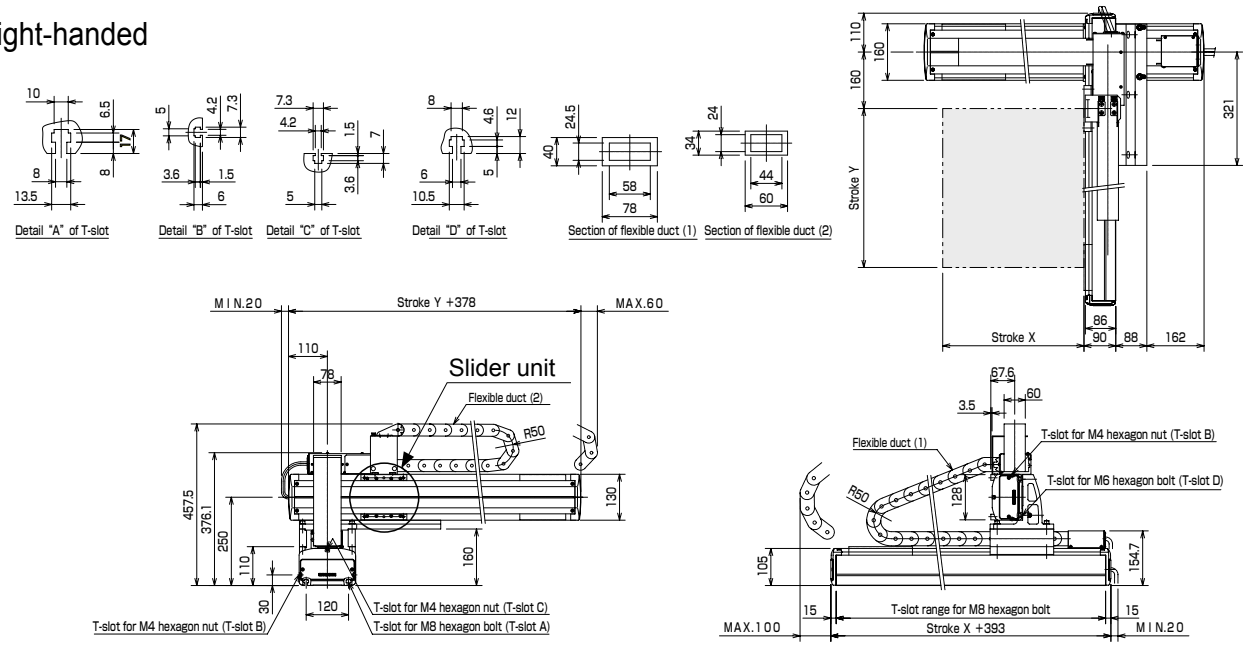

L: Left-handed

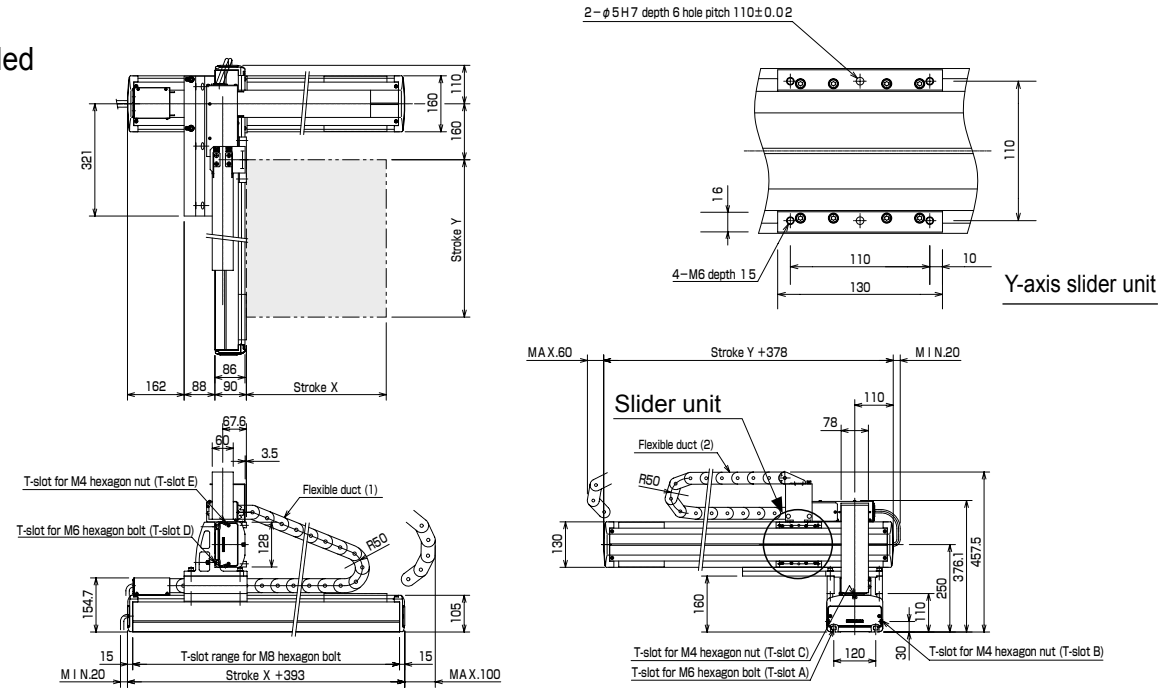

Example of Orthogonal Axes Combination: X-Y Flexible tube

[Specifications]

	X-axis	Y-axis
Axis type	KBB-50F-ST-M20N-□0	KBB-30E-ST-M20N-□5
Stroke (in increments of 100 mm)	200 to 1500mm	150 to 1050mm
Max. speed	1200mm/s (Note 1)	1200mm/s (Note 1)
Positioning repeatability	±0.01mm	
Lead	20mm	20mm
Motor output	200W	100W
Resolution	0.01mm	

Acceleration/deceleration time when the maximum speed is set: 0.36 sec. or over

Ball screw type

X-axis: Ball screw driven
Motor straight
Y-axis: Ball screw driven
Motor straight

Note 1: When the stroke is as given below, the maximum speed differs.

	Stroke (mm)	Max. speed (mm/s)
X-axis	700 to 800	1100
	900 to 1000	1000
	1100 to 1200	700
	1300	500
	1400	400
	1500	300
Y-axis	750	1000
	850	800
	950 to 1050	600

Max. load capacity (kg)	Y-axis stroke									
	150mm	250mm	350mm	450mm	550mm	650mm	750mm	850mm	950mm	1050mm
	20.0	20.0	20.0	20.0	20.0	20.0	19.0	17.0	14.0	11.0

R: Right-handed

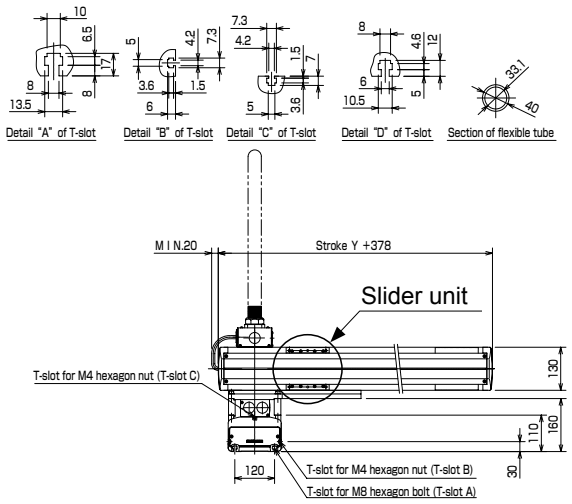

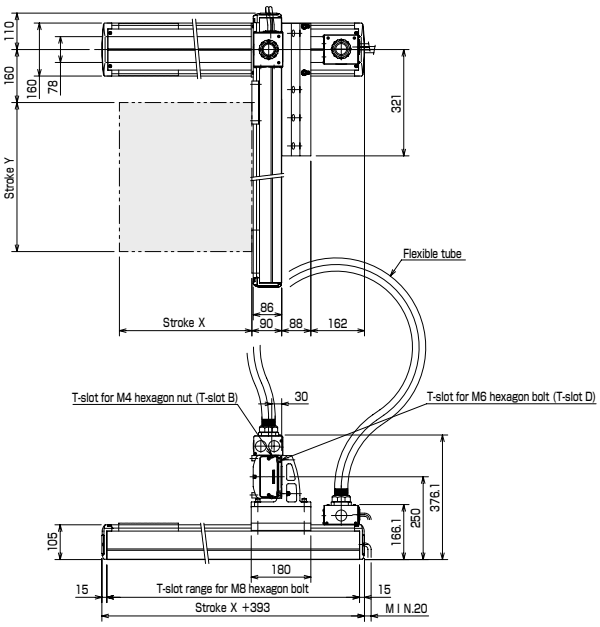

L: Left-handed

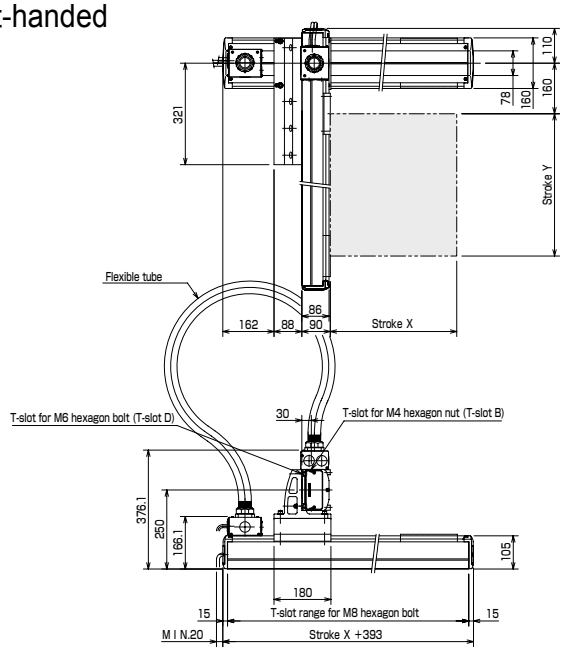

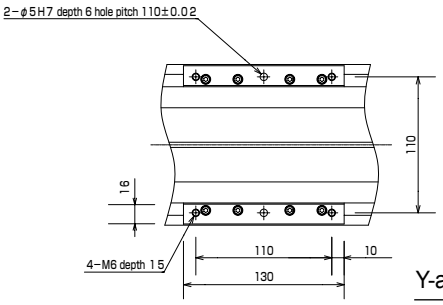

Y-axis slider unit

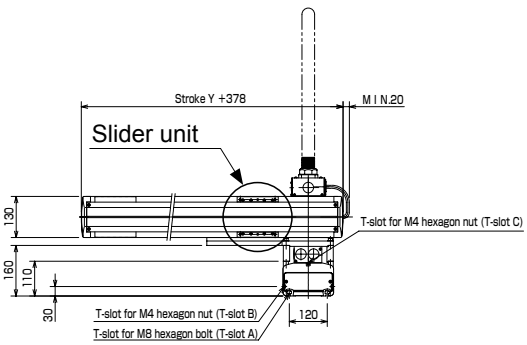

Discontinue

Example of Orthogonal Axes Combination: X-Y Flexible-duct Spec. Space-saving type

[Specifications]

	X-axis	Y-axis
Axis type	KBB-50F-U□-M20N-□0	KBB-30E-ST-M20N-□5
Stroke (in increments of 100 mm)	200 to 1500mm	150 to 1050mm
Max. speed	1200mm/s (Note 1)	1200mm/s (Note 1)
Positioning repeatability	±0.01mm	
Lead	20mm	20mm
Motor output	200W	100W
Resolution	0.01mm	

Acceleration/deceleration time when the maximum speed is set: 0.36 sec. or over

Ball screw type

X-axis: Ball screw driven
Motor straight
Y-axis: Ball screw driven
Motor straight

Note 1: When the stroke is as given below, the maximum speed differs.

	Stroke (mm)	Max. speed (mm/s)
X-axis	700 to 800	1100
	900 to 1000	1000
	1100 to 1200	700
	1300	500
	1400	400
	1500	300
Y-axis	750	1000
	850	800
	950 to 1050	600

Max. load capacity (kg)	Y-axis stroke									
	150mm	250mm	350mm	450mm	550mm	650mm	750mm	850mm	950mm	1050mm
	20.0	20.0	20.0	20.0	20.0	20.0	19.0	17.0	14.0	11.0

R: Right-handed

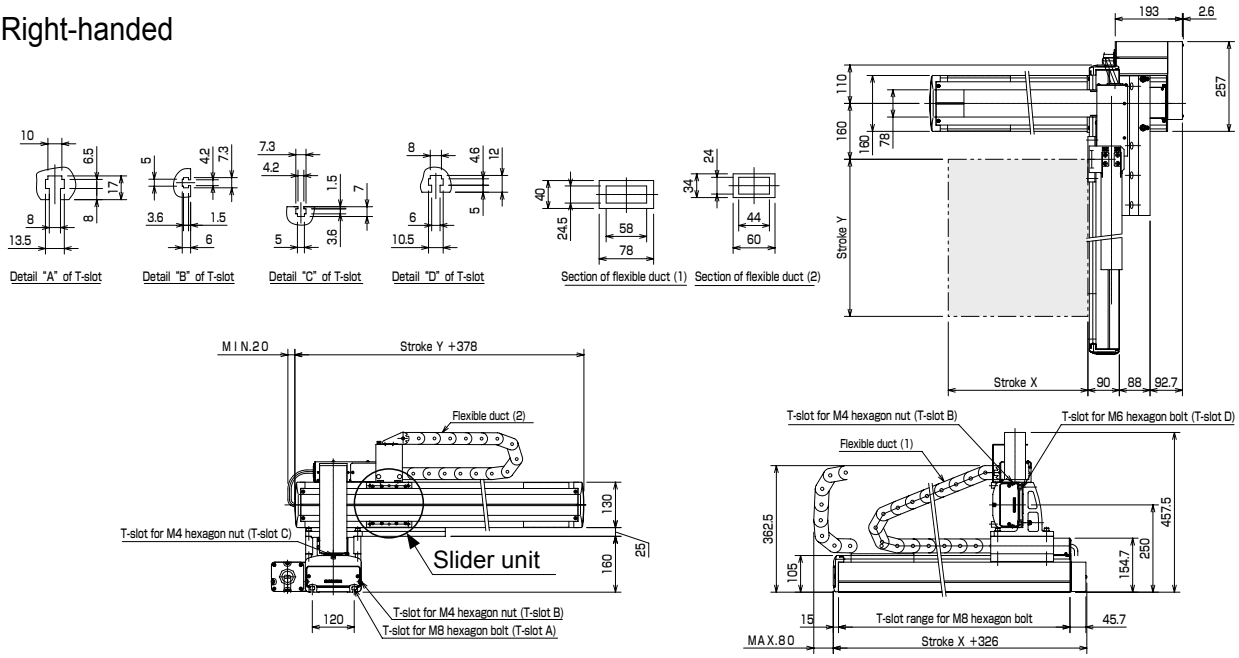

L: Left-handed

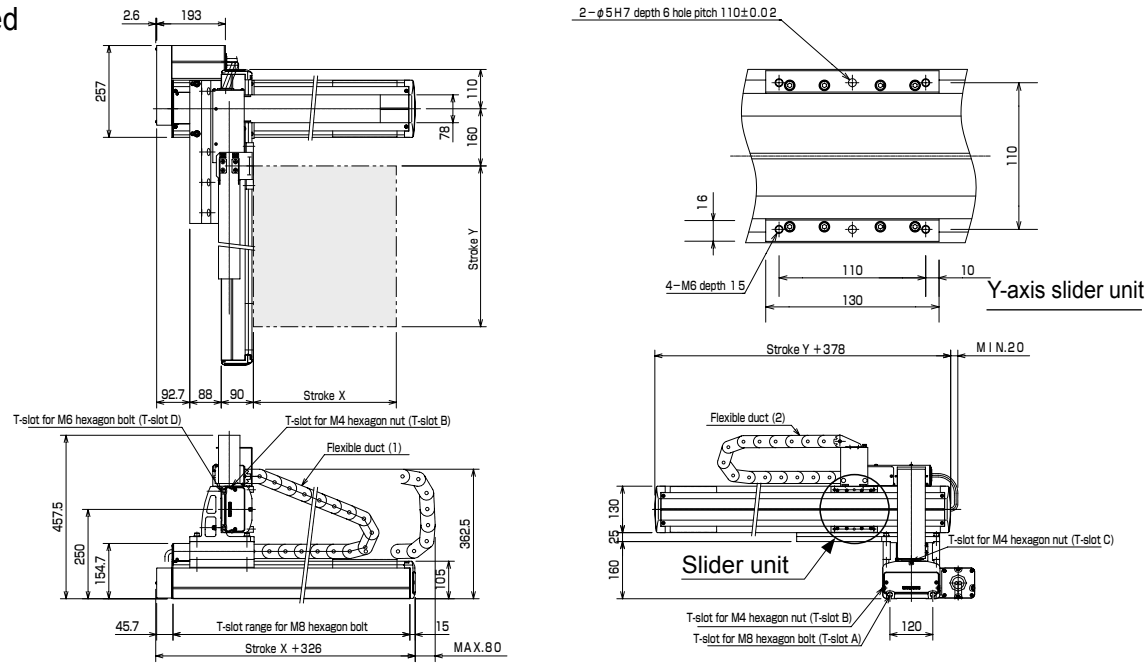

Example of Orthogonal Axes Combination: X-Y Flexible-duct Spec. Space-saving type

[Specifications]

	X-axis	Y-axis
Axis type	KBB-50F-U□-M20N-□0	KBB-30E-ST-M20N-□5
Stroke (in increments of 100 mm)	200 to 1500mm	150 to 1050mm
Max. speed	1200mm/s (Note 1)	1200mm/s (Note 1)
Positioning repeatability	±0.01mm	
Lead	20mm	20mm
Motor output	200W	100W
Resolution	0.01mm	

Acceleration/deceleration time when the maximum speed is set: 0.36 sec. or over

Ball screw type

X-axis: Ball screw driven
Motor straight
Y-axis: Ball screw driven
Motor straight

Note 1: When the stroke is as given below, the maximum speed differs.

	Stroke (mm)	Max. speed (mm/s)
X-axis	700 to 800	1100
	900 to 1000	1000
	1100 to 1200	700
	1300	500
	1400	400
	1500	300
Y-axis	750	1000
	850	800
	950 to 1050	600

Max. load capacity (kg)	Y-axis stroke									
	150mm	250mm	350mm	450mm	550mm	650mm	750mm	850mm	950mm	1050mm
	20.0	20.0	20.0	20.0	20.0	20.0	19.0	17.0	14.0	11.0

R: Right-handed

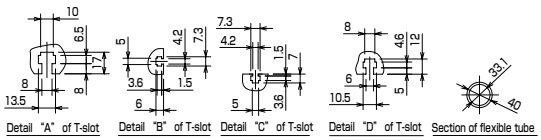

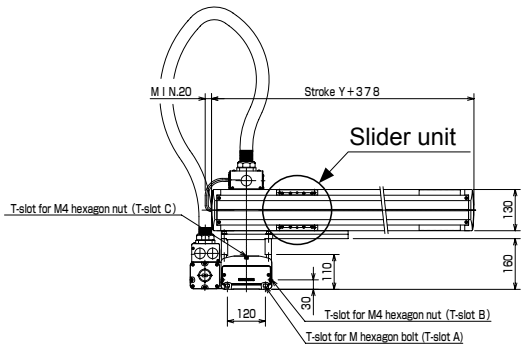

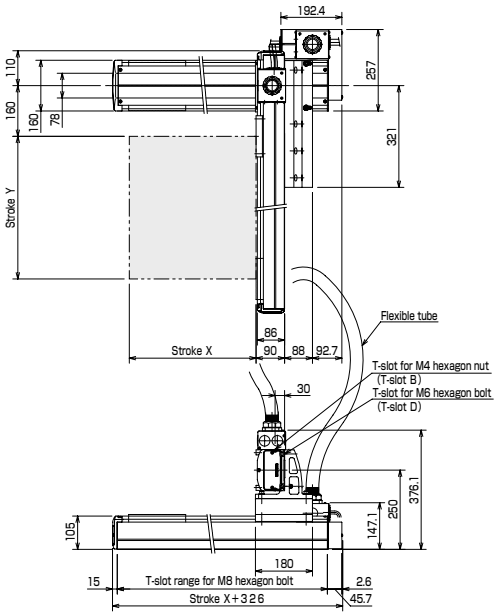

L: Left-handed

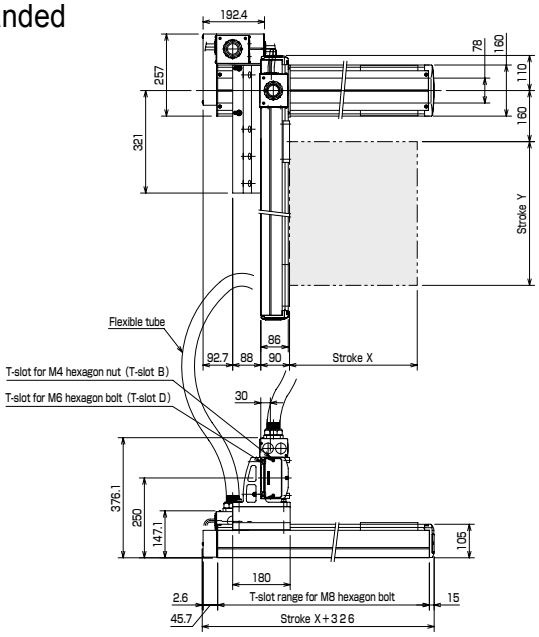

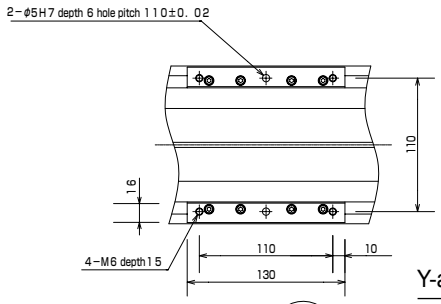

Y-axis slider unit

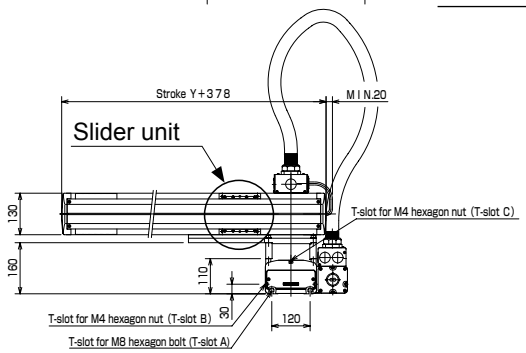

Discontinue

Example of Orthogonal Axes Combination: X-Y Flexible duct spec

[Specifications]

	X-axis	Y-axis
Axis type	KBB-50F-ST-M20N-□0	KBB-30F-ST-M20N-□0
Stroke (in increments of 100 mm)	200 to 1500mm	100 to 1000mm
Max. speed	1200mm/s (Note 1)	1200mm/s (Note 1)
Positioning repeatability	±0.01mm	
Lead	20mm	20mm
Motor output	200W	200W
Resolution	0.01mm	

Acceleration/deceleration time when the maximum speed is set: 0.36 sec. or over

Ball screw type

X-axis: Ball screw driven
Motor straight
Y-axis: Ball screw driven
Motor straight

Note 1: When the stroke is as given below, the maximum speed differs.

	Stroke (mm)	Max. speed (mm/s)
X-axis	700 to 800	1100
	900 to 1000	1000
	1100 to 1200	700
	1300	500
	1400	400
	1500	300
Y-axis	700	1000
	800	800
	900 to 1000	600

Max. load capacity (kg)	Y-axis stroke									
	100mm	200mm	300mm	400mm	500mm	600mm	700mm	800mm	900mm	1000mm
	40.0(31.0)	40.0(30.0)	33.0(29.0)	31.0(28.0)	27.0	23.0	20.0	17.0	14.0	12.0

When the X-axis speed exceeds 1,000 m/s, the values in parentheses are used for the Max. load capacity.

R: Right-handed

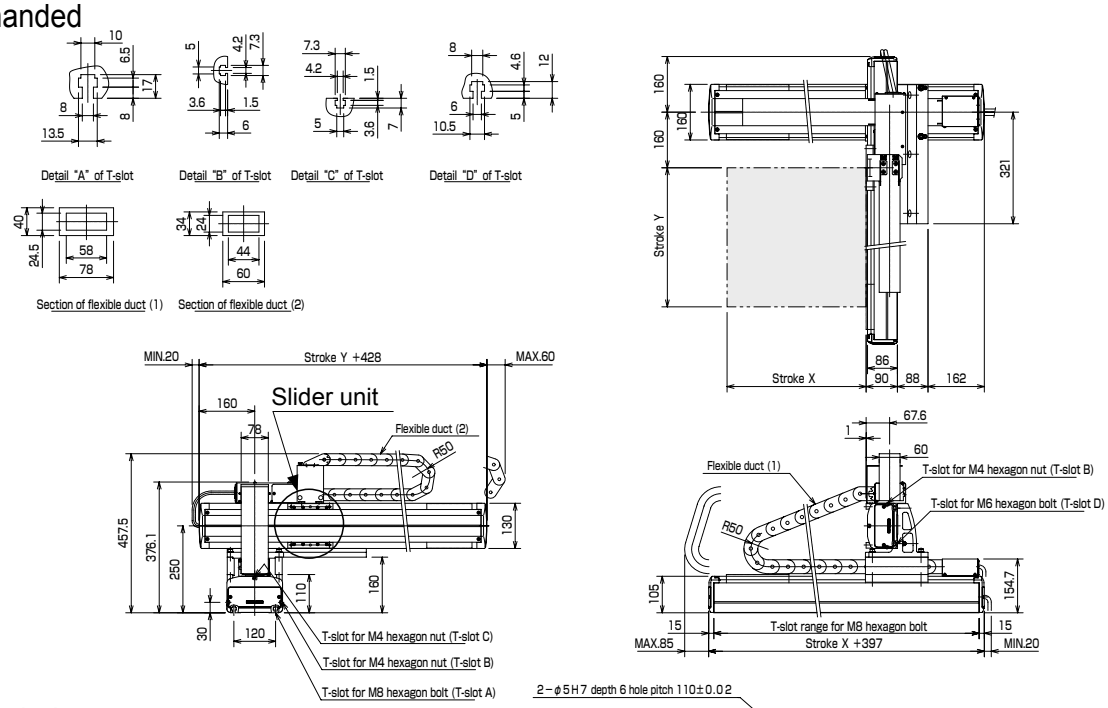

L: Left-handed

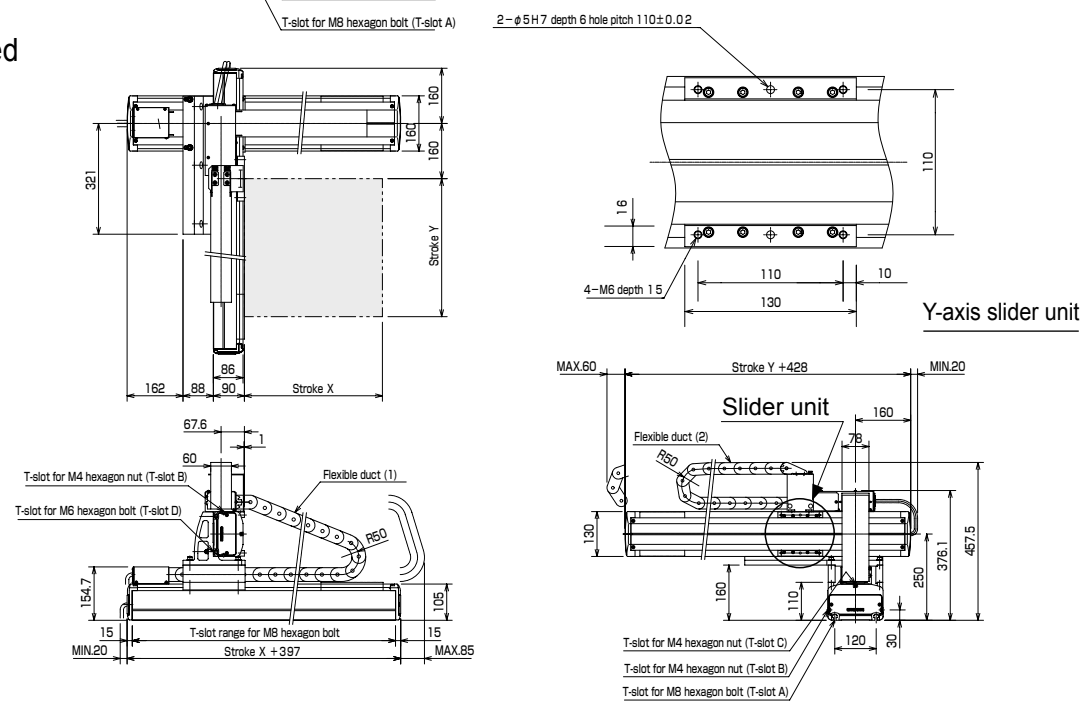

Example of Orthogonal Axes Combination: X-Y Flexible duct spec

[Specifications]

	X-axis	Y-axis
Axis type	KBB-50F-ST-M20N-□0	KBB-30F-ST-M20N-□0
Stroke (in increments of 100 mm)	200 to 1500mm	100 to 1000mm
Max. speed	1200mm/s (Note 1)	1200mm/s (Note 1)
Positioning repeatability	±0.01mm	
Lead	20mm	20mm
Motor output	200W	200W
Resolution	0.01mm	

Acceleration/deceleration time when the maximum speed is set: 0.36 sec. or over

Ball screw type

X-axis: Ball screw driven
Motor straight
Y-axis: Ball screw driven
Motor straight

Note 1: When the stroke is as given below, the maximum speed differs.

	Stroke (mm)	Max. speed (mm/s)
X-axis	700 to 800	1100
	900 to 1000	1000
	1100 to 1200	700
	1300	500
	1400	400
	1500	300
Y-axis	700	1000
	800	800
	900 to 1000	600

Max. load capacity (kg)	Y-axis stroke									
	100mm	200mm	300mm	400mm	500mm	600mm	700mm	800mm	900mm	1000mm
	40.0 (31.0)	40.0 (30.0)	33.0 (29.0)	31.0 (28.0)	27.0	23.0	20.0	17.0	14.0	12.0

When the X-axis speed exceeds 1,000 m/s, the values in parentheses are used for the Max. load capacity.

R: Right-handed

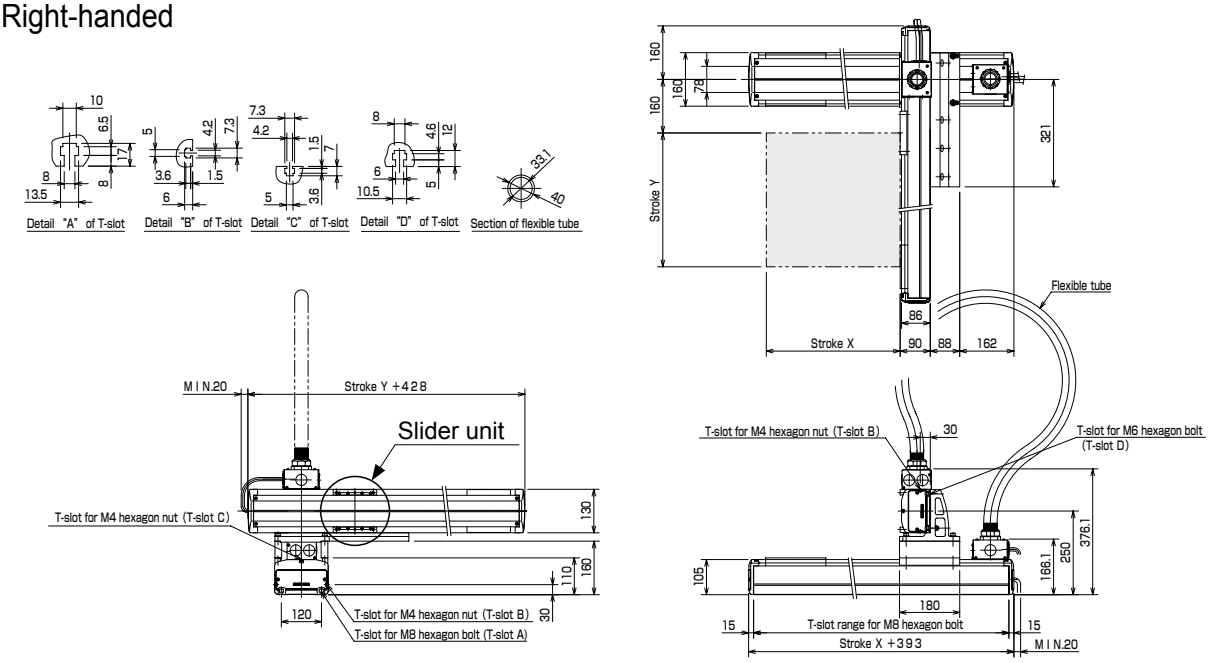

L: Left-handed

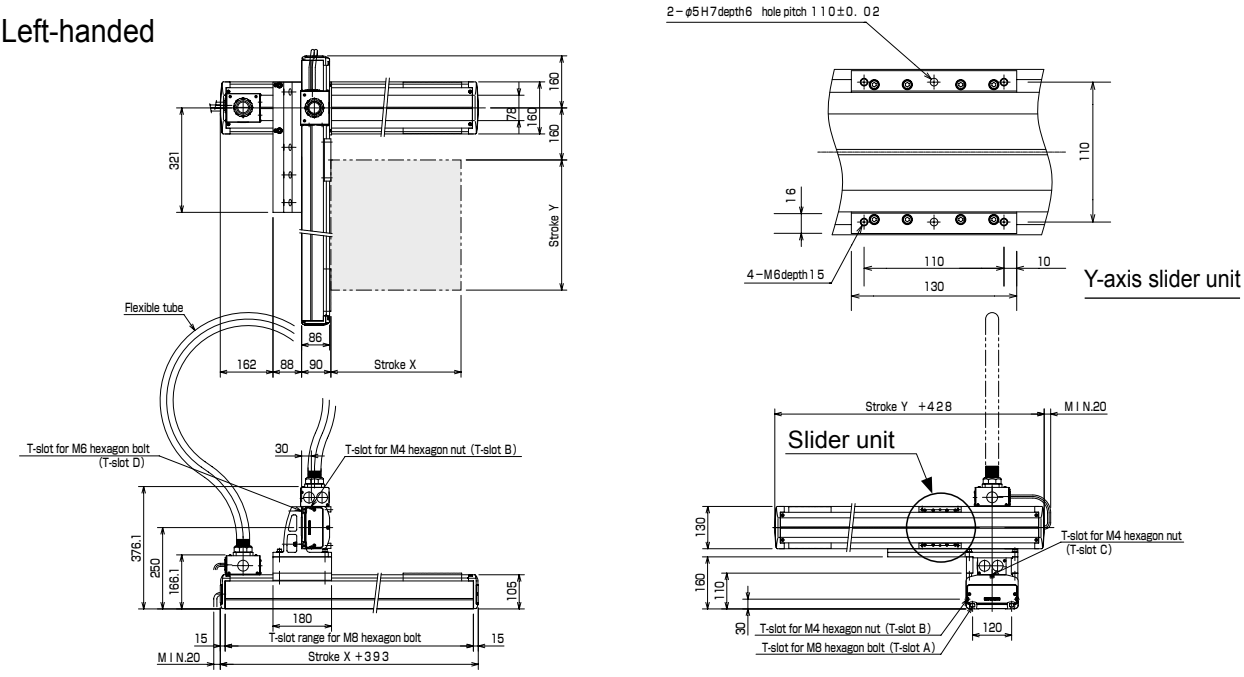

Discontinue

Example of Orthogonal Axes Combination: X-Y Flexible-duct Spec. Space-saving type

[Specifications]

	X-axis	Y-axis
Axis type	KBB-50F-U□-M20N-□0	KBB-30F-ST-M20N-□0
Stroke (in increments of 100 mm)	200 to 1500mm	100 to 1000mm
Max. speed	1200mm/s (Note 1)	1200mm/s (Note 1)
Positioning repeatability	±0.01mm	
Lead	20mm	20mm
Motor output	200W	200W
Resolution	0.01mm	

Acceleration/deceleration time when the maximum speed is set: 0.36 sec. or over

Ball screw type

X-axis: Ball screw driven
Side mounted motor
Y-axis: Ball screw driven
Straight

Note 1: When the stroke is as given below, the maximum speed differs.

	Stroke (mm)	Max. speed (mm/s)
X-axis	700 to 800	1100
	900 to 1000	1000
	1100 to 1200	700
	1300	500
	1400	400
	1500	300
Y-axis	700	1000
	800	800
	900 to 1000	600

Max. load capacity (kg)	Y-axis stroke									
	100mm	200mm	300mm	400mm	500mm	600mm	700mm	800mm	900mm	1000mm
	40.0 (31.0)	40. (330.0)	33.0 (329.0)	31.0 (328.0)	27.0	23.0	20.0	17.0	14.0	12.0

When the X-axis speed exceeds 1,000 m/s, the values in parentheses are used for the Max. load capacity.

R: Right-handed

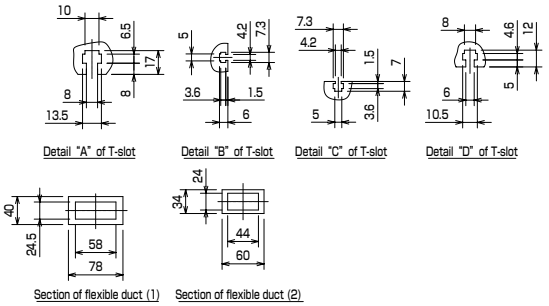

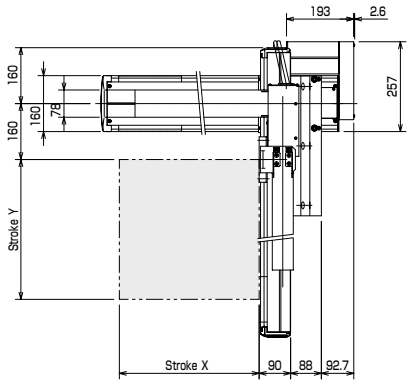

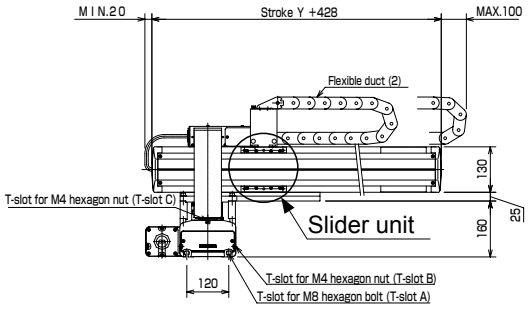

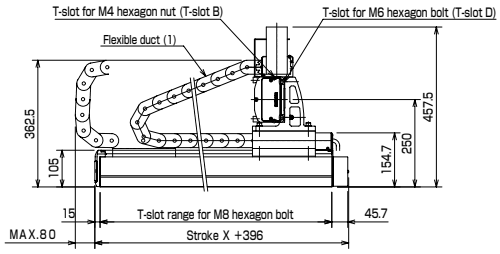

L: Left-handed

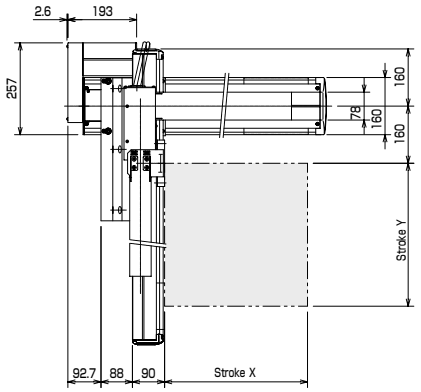

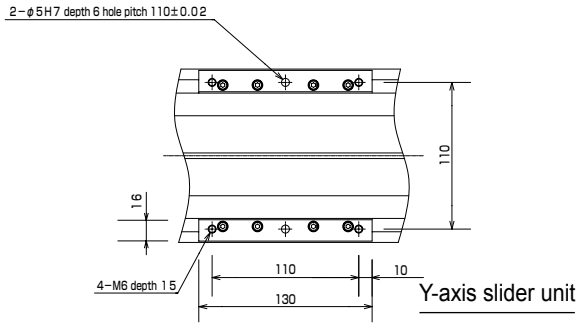

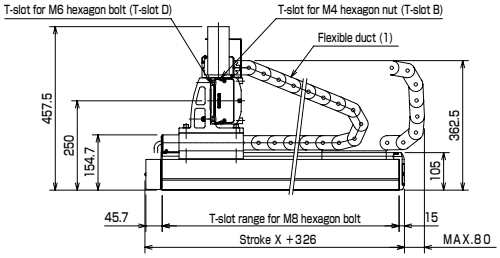

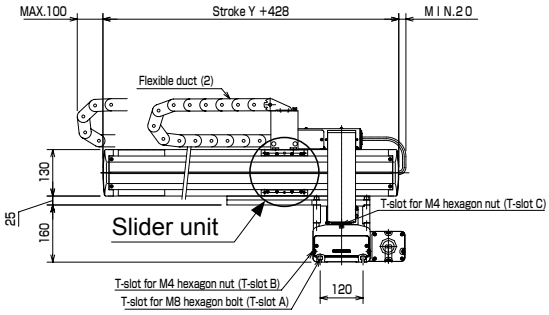

Example of Orthogonal Axes Combination: X-Y Flexible-duct Spec. Space-saving type

[Specifications]

	X-axis	Y-axis
Axis type	KBB-50F-U□-M20N-□0	KBB-30F-ST-M20N-□0
Stroke (in increments of 100 mm)	200 to 1500mm	100 to 1000mm
Max. speed	1200mm/s (Note 1)	1200mm/s (Note 1)
Positioning repeatability	±0.01mm	
Lead	20mm	20mm
Motor output	200W	200W
Resolution	0.01mm	

Acceleration/deceleration time when the maximum speed is set: 0.36 sec. or over

Ball screw type

X-axis: Ball screw driven
Side mounted motor
Y-axis: Ball screw driven
Straight

Note 1: When the stroke is as given below, the maximum speed differs.

	Stroke (mm)	Max. speed (mm/s)
X-axis	700 to 800	1100
	900 to 1000	1000
	1100 to 1200	700
	1300	500
	1400	400
	1500	300
Y-axis	700	1000
	800	800
	900 to 1000	600

Max. load capacity (kg)	Y-axis stroke									
	100mm	200mm	300mm	400mm	500mm	600mm	700mm	800mm	900mm	1000mm
	40.0 (31.0)	40.0 (30.0)	33.0 (29.0)	31.0 (28.0)	27.0	23.0	20.0	17.0	14.0	12.0

When the X-axis speed exceeds 1,000 m/s, the values in parentheses are used for the Max. load capacity.

R: Right-handed

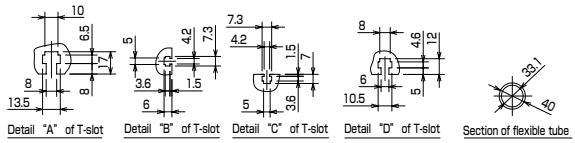

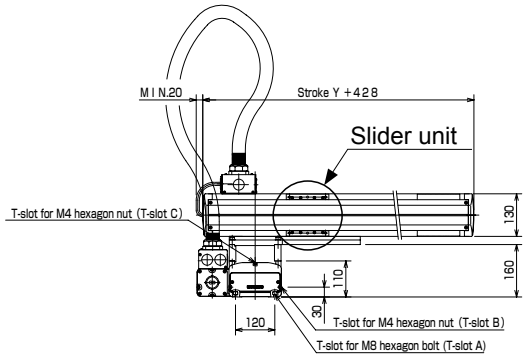

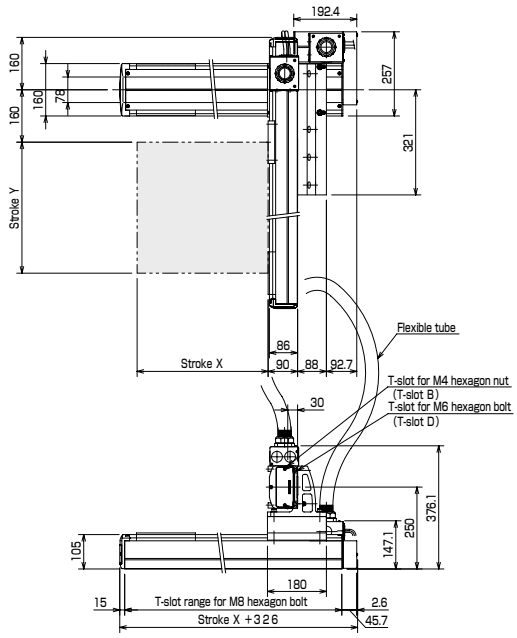

L: Left-handed

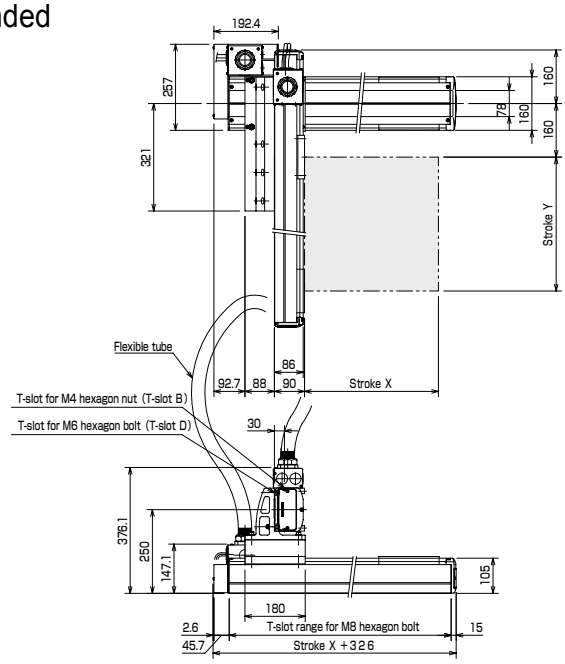

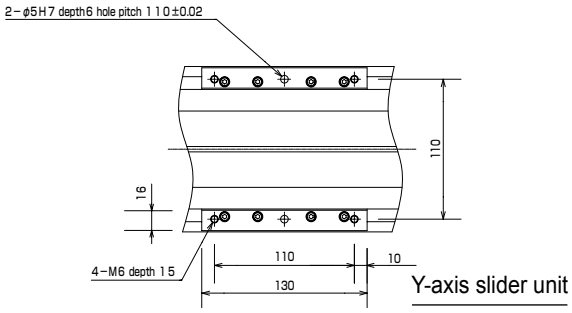

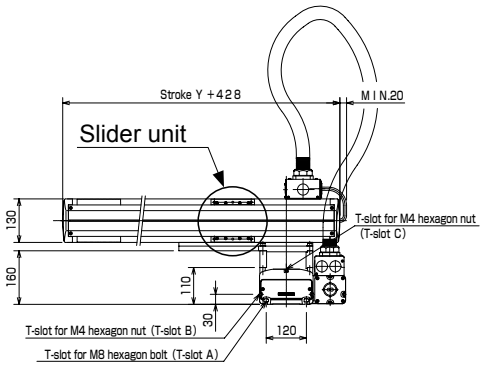

Discontinue

Example of Orthogonal Axes Combination: X-Y Flexible duct spec

[Specifications]

	X-axis	Y-axis
Axis type	KBB-10E-BT-M21N-□0	KBB-10E-B□-S21N-□5
Stroke (in increments of 100 mm)	100 to 1800mm	150 to 650mm
Max. speed	1000mm/s	1000mm/s
Positioning repeatability	±0.05mm	
Lead	21mm	21mm
Motor output	100W	100W
Resolution	0.01mm	

Acceleration/deceleration time when the maximum speed is set: 0.4 sec. or over

Timing belt type

X-axis: Timing belt driven
Side mounted motor
Y-axis: Timing belt driven
Side mounted motor

Max. load capacity (kg)	Y-axis stroke					
	150mm	250mm	350mm	450mm	550mm	650mm
	8.0	8.0	6.0	5.0	3.0	1.0

The values in ( ) are applicable when the X-axis stroke is 1,100 mm or over.

R: Right-handed

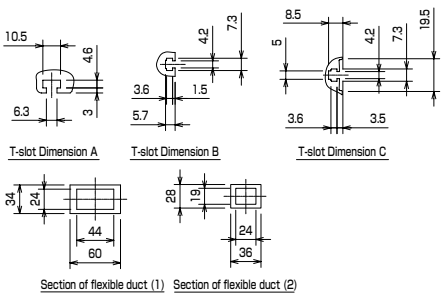

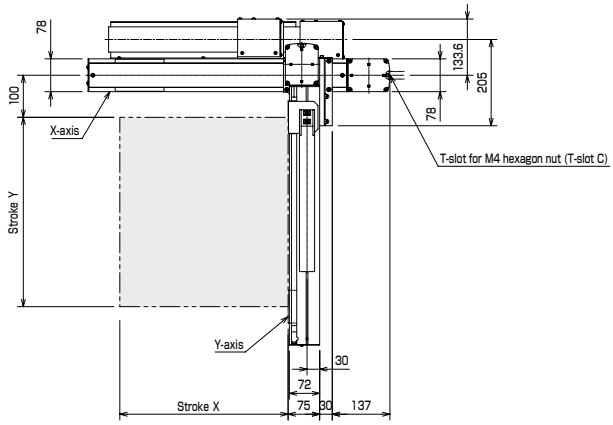

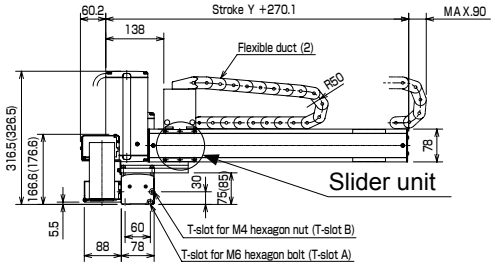

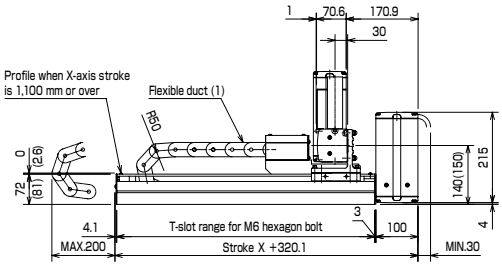

L: Left-handed

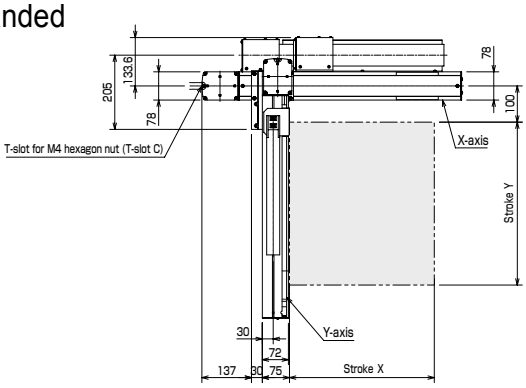

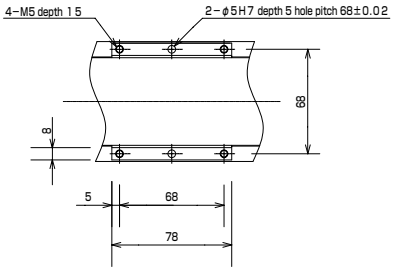

Y-axis slider unit

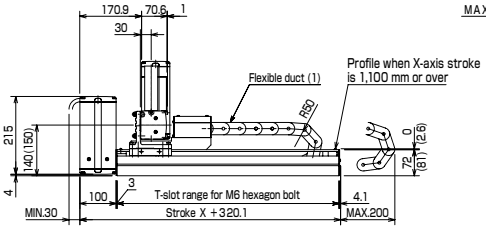

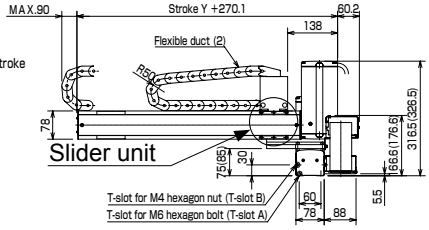

Example of Orthogonal Axes Combination: X-Y Flexible duct spec

[Specifications]

	X-axis	Y-axis
Axis type	KBB-10F-BT-M21N-□0	KBB-10E-B□-S21N-□5
Stroke (in increments of 100 mm)	100 to 1800mm	150 to 650mm
Max. speed	1000mm/s	1000mm/s
Positioning repeatability	±0.05mm	
Lead	21mm	21mm
Motor output	200W	100W
Resolution	0.01mm	

Acceleration/deceleration time when the maximum speed is set: 0.3 sec. or over

Timing belt type

X-axis: Timing belt driven
Side mounted motor
Y-axis: Timing belt driven
Side mounted motor

Max. load capacity (kg)	Y-axis stroke					
	150mm	250mm	350mm	450mm	550mm	650mm
	9.0	8.0	6.0	5.0	3.0	1.0

The values in ( ) are applicable when the X-axis stroke is 1,100 mm or over.

R: Right-handed

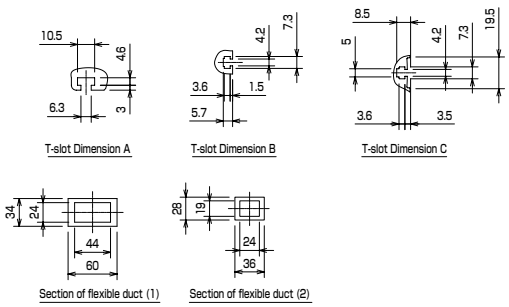

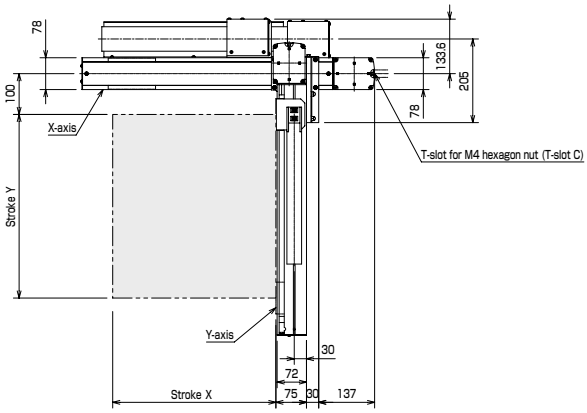

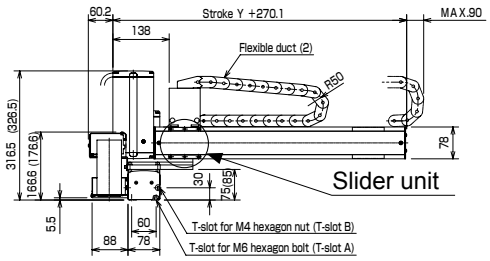

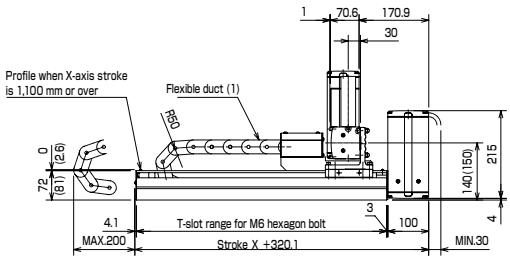

L: Left-handed

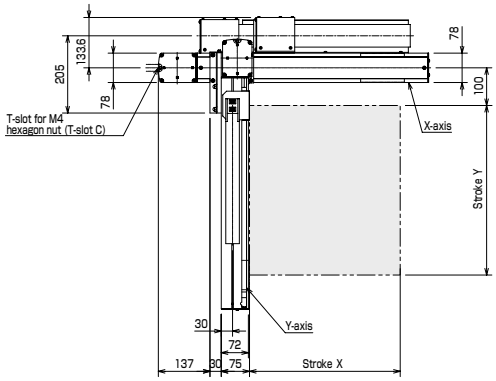

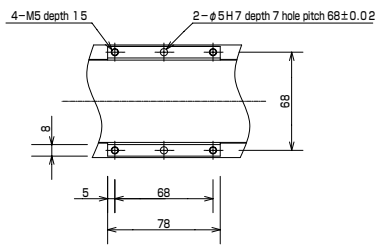

Y-axis slider unit

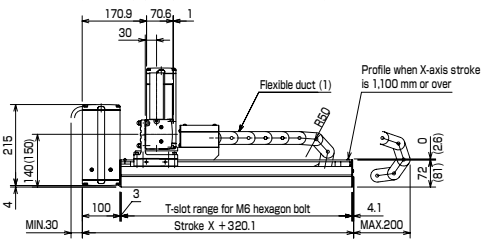

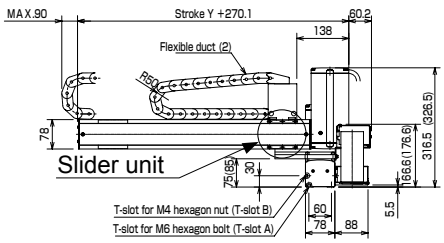

Discontinue

Example of Orthogonal Axes Combination: X-Y Flexible duct spec

[Specifications]

	X-axis	Y-axis
Axis type	KBB-30E-BT-M21N-□0	KBB-10E-B□-M21N-□0
Stroke (in increments of 100 mm)	100 to 2500mm	100 to 800mm
Max. speed	1000mm/s	1000mm/s
Positioning repeatability	±0.05mm	
Lead	21mm	21mm
Motor output	100W	100W
Resolution	0.01mm	

Acceleration/deceleration time when the maximum speed is set: 0.3 sec. or over

Timing belt type

X-axis: Timing belt driven
Side mounted motor
Y-axis: Timing belt driven
Side mounted motor

Max. load capacity (kg)	Y-axis stroke							
	100mm	200mm	300mm	400mm	500mm	600mm	700mm	800mm
	8.0	7.0	6.0	6.0	5.0	5.0	1.0	1.0

The values in ( ) are applicable when the X-axis stroke is 1,900 mm or over.

R: Right-handed

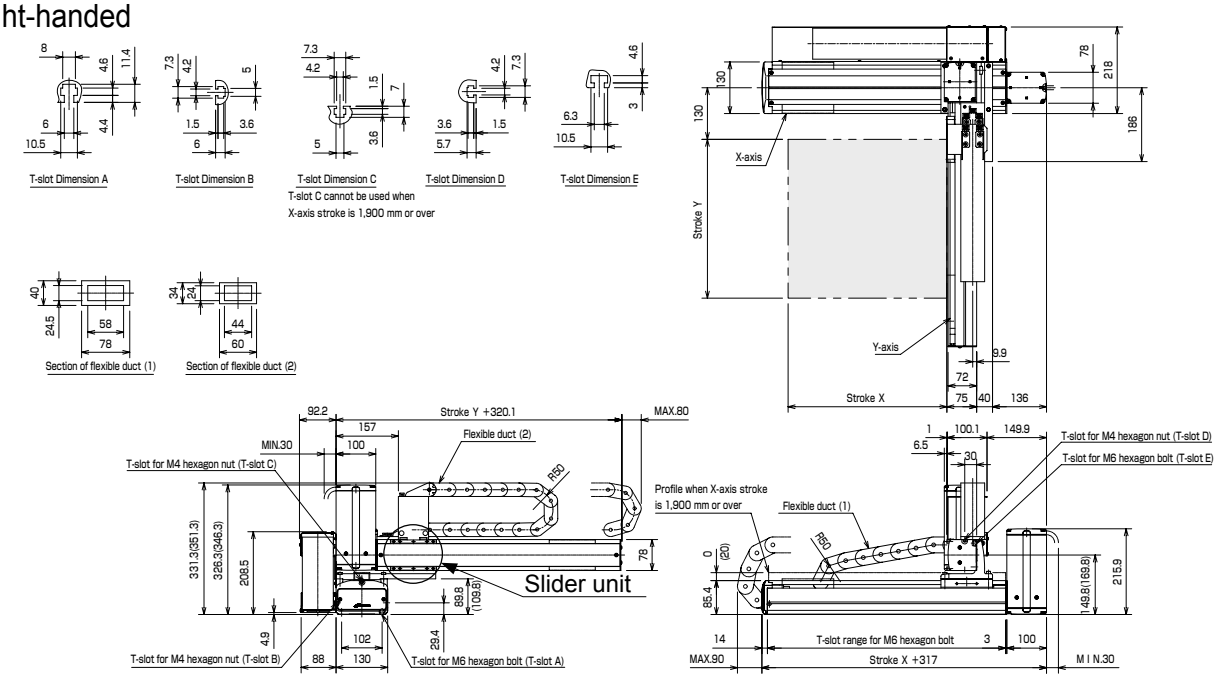

L: Left-handed

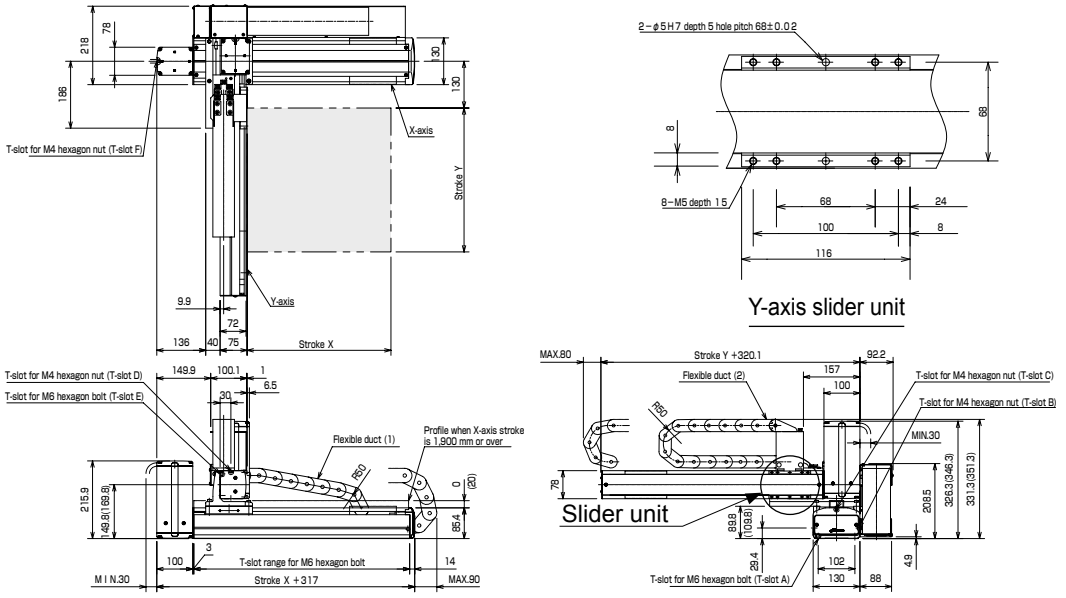

Example of Orthogonal Axes Combination: X-Y Flexible duct spec

[Specifications]

	X-axis	Y-axis
Axis type	KBB-30F-BT-M21N-□0	KBB-10E-B□-M21N-□0
Stroke (in increments of 100 mm)	100 to 2500mm	100 to 800mm
Max. speed	1000mm/s	1000mm/s
Positioning repeatability	±0.05mm	
Lead	21mm	21mm
Motor output	200W	100W
Resolution	0.01mm	

Acceleration/deceleration time when the maximum speed is set: 0.3 sec. or over

Timing belt type

X-axis: Timing belt driven
Side mounted motor
Y-axis: Timing belt driven
Side mounted motor

Max. load capacity (kg)	Y-axis stroke							
	100mm	200mm	300mm	400mm	500mm	600mm	700mm	800mm
	15.0	15.0	14.0	11.0	8.0	6.0	4.0	2.0

The values in ( ) are applicable when the X-axis stroke is 1,900 mm or over.

R: Right-handed

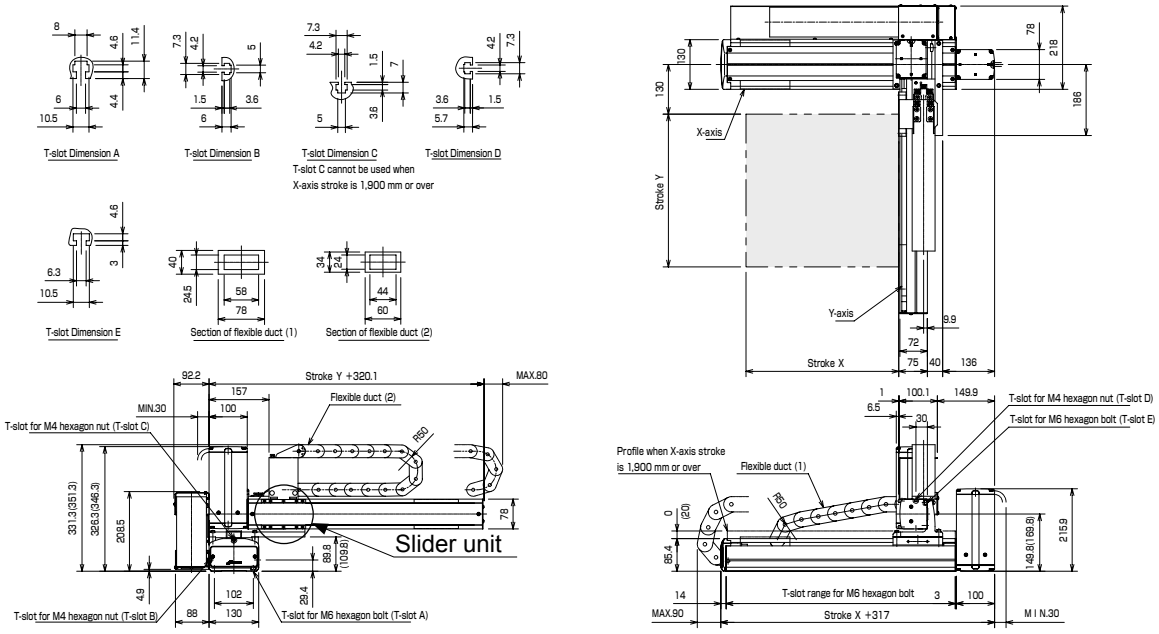

L: Left-handed

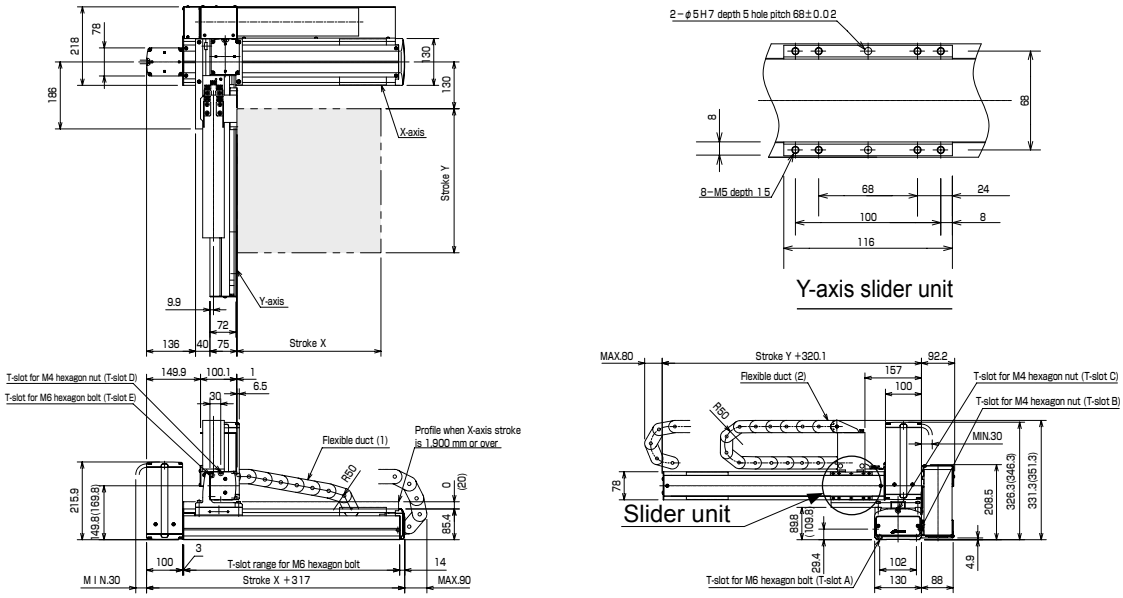

X-Y Flexible duct spec

Discontinue

Example of Orthogonal Axes Combination: X-Y Flexible duct spec

[Specifications]

	X-axis	Y-axis
Axis type	KBB-30F-BT-M21N-□0	KBB-10F-B□-M21N-□0
Stroke (in increments of 100 mm)	100 to 2500mm	100 to 800mm
Max. speed	1000mm/s	1000mm/s
Positioning repeatability	±0.05mm	
Lead	21mm	21mm
Motor output	200W	200W
Resolution	0.01mm	

Acceleration/deceleration time when the maximum speed is set: 0.3 sec. or over

Timing belt type

X-axis: Timing belt driven
Side mounted motor
Y-axis: Timing belt driven
Side mounted motor

Max. load capacity (kg)	Y-axis stroke							
	100mm	200mm	300mm	400mm	500mm	600mm	700mm	800mm
	20.0	18.0	14.0	11.0	8.0	6.0	4.0	2.0

The values in ( ) are applicable when the X-axis stroke is 1,900 mm or over.

R: Right-handed

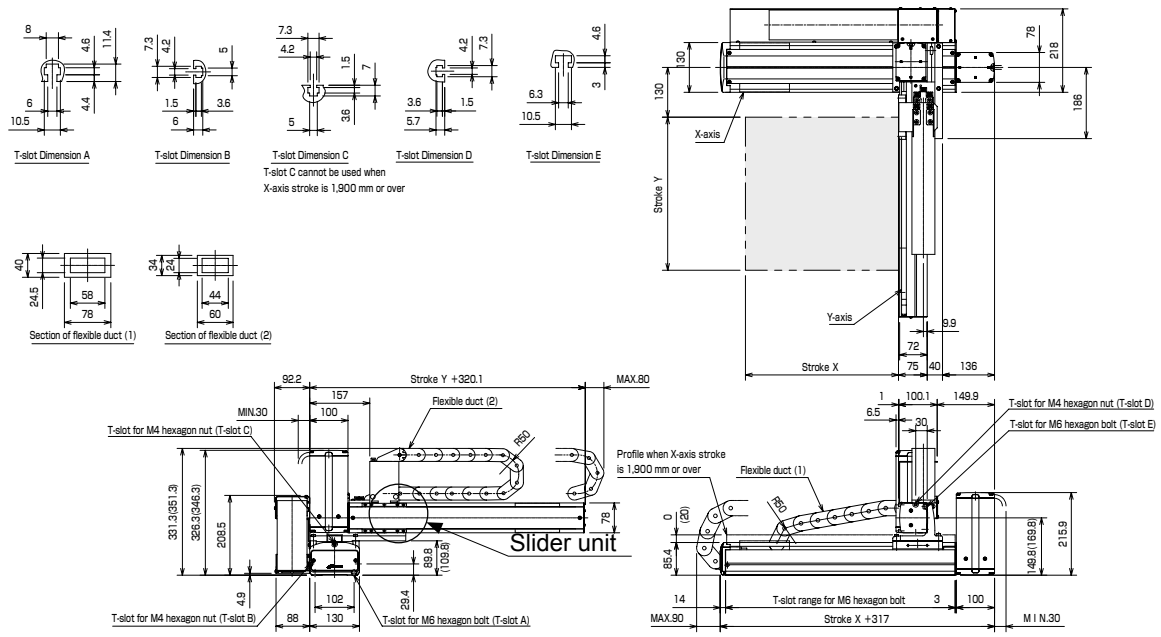

L: Left-handed

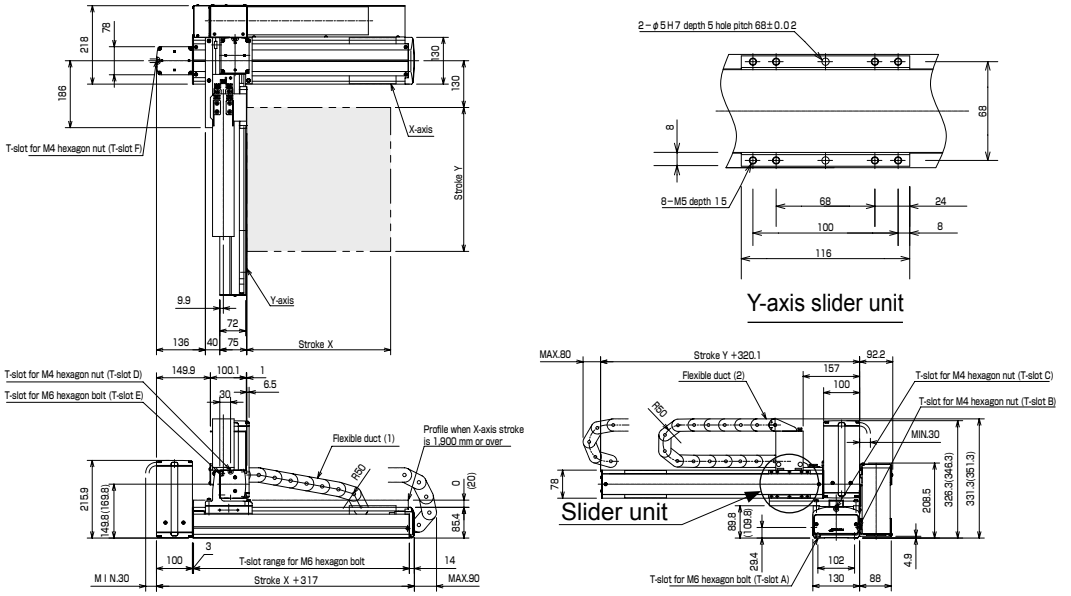

Example of Orthogonal Axes Combination: X-Y Flexible duct spec

[Specifications]

	X-axis	Y-axis
Axis type	KBB-50F-BT-M21N-□0	KBB-30E-B□-M21N-□0
Stroke (in increments of 100 mm)	200 to 2500mm	100 to 1000mm
Max. speed	1000mm/s	1000mm/s
Positioning repeatability	±0.05mm	
Lead	21mm	21mm
Motor output	200W	100W
Resolution	0.01mm	

Acceleration/deceleration time when the maximum speed is set: 0.3 sec. or over

Timing belt type

X-axis: Timing belt driven
Side mounted motor
Y-axis: Timing belt driven
Side mounted motor

Max. load capacity (kg)	Y-axis stroke									
	100mm	200mm	300mm	400mm	500mm	600mm	700mm	800mm	900mm	1000mm
	15.0	15.0	15.0	15.0	15.0	15.0	15.0	13.0	12.0	11.0

The values in ( ) are applicable when the X-axis stroke is 1,900 mm or over.

R: Right-handed

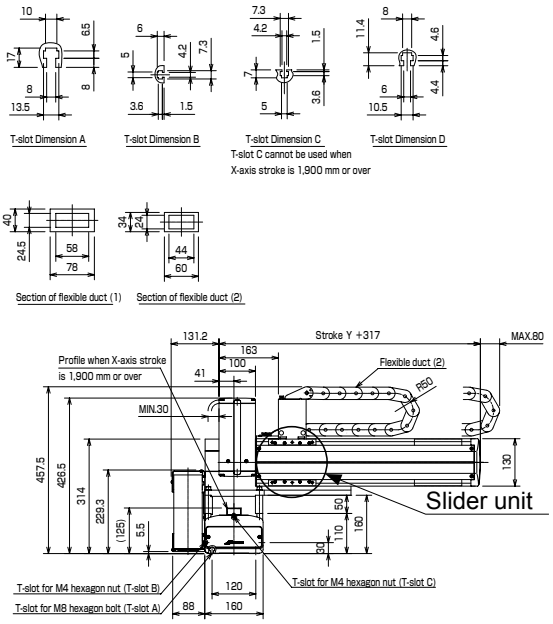

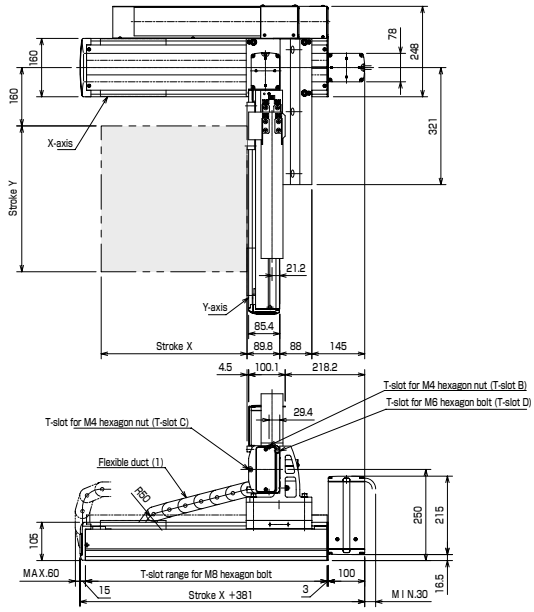

L: Left-handed

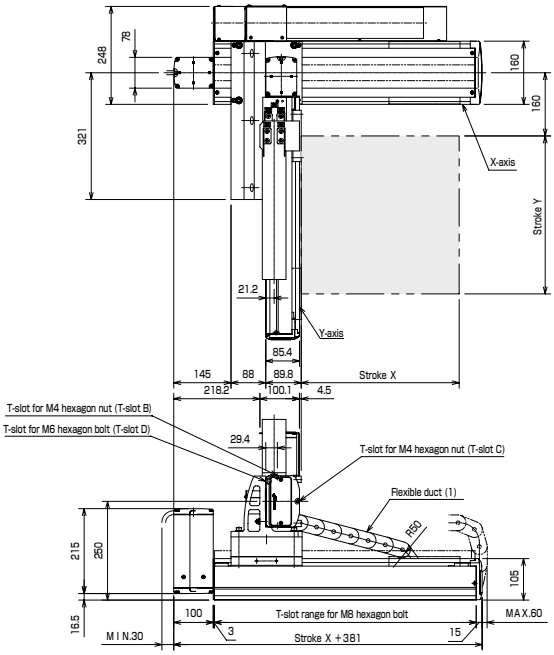

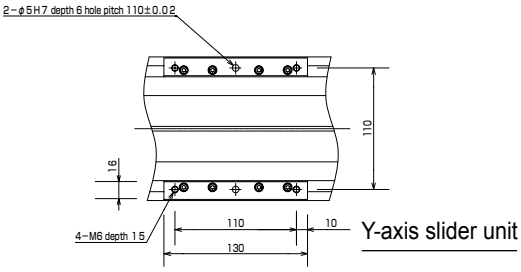

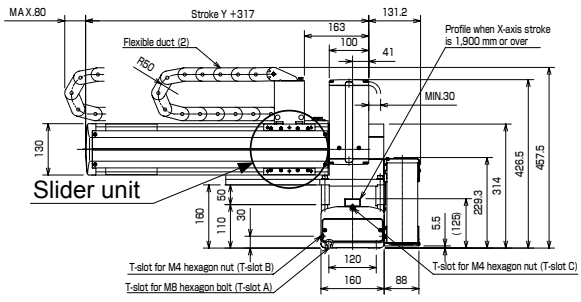

Discontinue

Example of Orthogonal Axes Combination: X-Y Flexible duct spec

[Specifications]

	X-axis	Y-axis
Axis type	KBB-50F-BT-M21N-□0	KBB-30F-B□-M21N-□0
Stroke (in increments of 100 mm)	200 to 2500mm	100 to 1000mm
Max. speed	1000mm/s	1000mm/s
Positioning repeatability	±0.05mm	
Lead	21mm	21mm
Motor output	200W	200W
Resolution	0.01mm	

Acceleration/deceleration time when the maximum speed is set: 0.3 sec. or over

Timing belt type

X-axis: Timing belt driven
Side mounted motor
Y-axis: Timing belt driven
Side mounted motor

Max. load capacity (kg)	Y-axis stroke									
	100mm	200mm	300mm	400mm	500mm	600mm	700mm	800mm	900mm	1000mm
	20.0	19.0	18.0	17.0	16.0	15.0	14.0	13.0	12.0	10.0

The values in ( ) are applicable when the X-axis stroke is 1,900 mm or over.

R: Right-handed

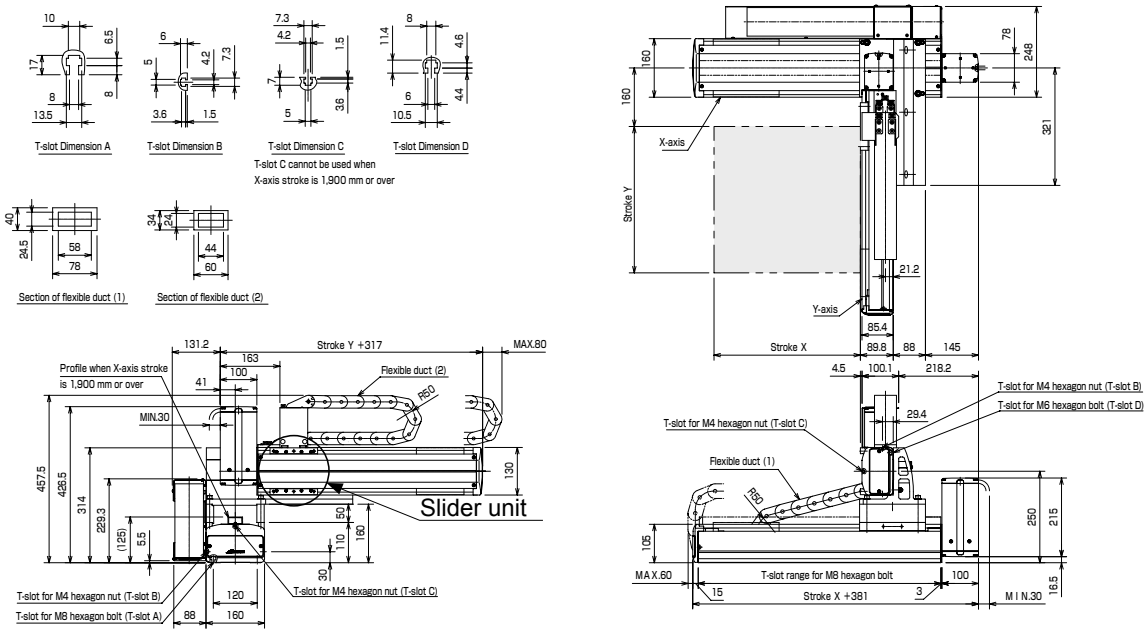

L: Left-handed

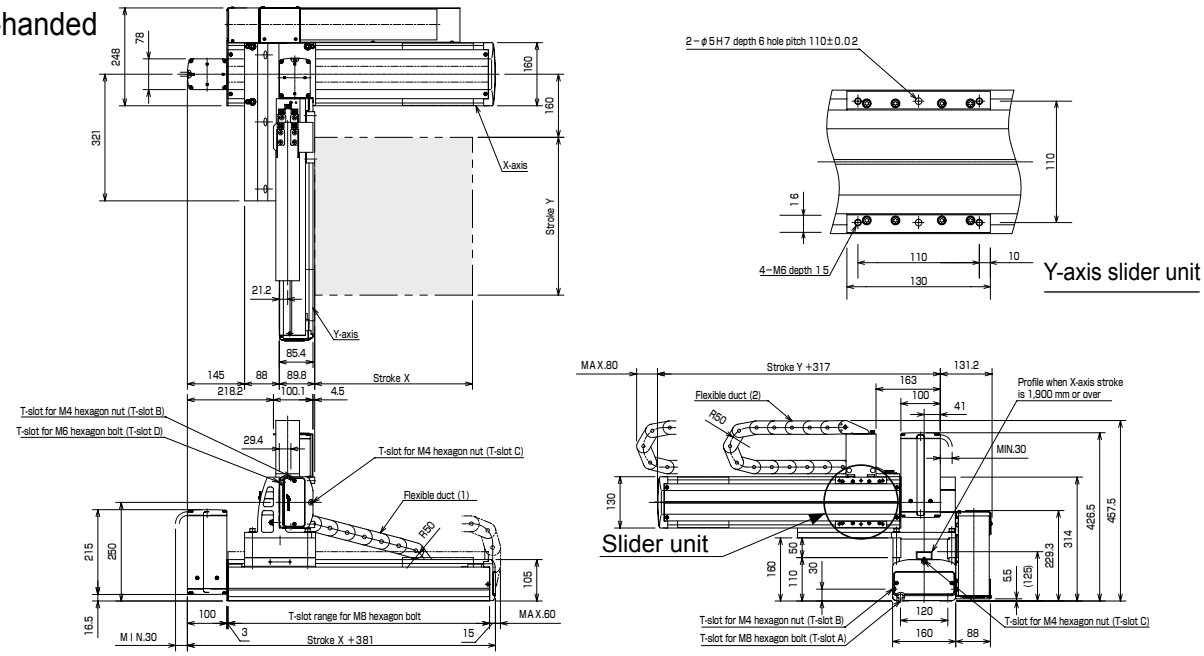

Example of Orthogonal Axes Combination: X-Z Flexible duct spec

[Specifications]

	X-axis	Z-axis
Axis type	KBB-10E-ST-M20N-□0	KBB-10E-ST-S10B-□5
Stroke (in increments of 100 mm)	100 to 1000mm	150 to 450mm
Max. speed	1200mm/s (Note 1)	600mm/s
Positioning repeatability	±0.01mm	
Lead	20mm	10mm
Motor output	100W	100W, with brake
Resolution	0.01mm	

Acceleration/deceleration time when the maximum speed is set: 0.36 sec. or over

Ball screw type

X-axis: Ball screw driven
Motor straight
Z-axis: Ball screw driven
Motor straight

Note 1: When the stroke is as given below, the maximum speed differs.

	Stroke (mm)	Max. speed (mm/s)
X-axis	700	1000
	800	900
	900 to 1000	600

Max. load capacity (kg) (Note 2)	Z-axis stroke			
	150mm	250mm	350mm	450mm
	8.0	6.0	4.0	2.0

Note 2: Load capacity when a regenerative discharge unit (ABSU-2000) is used.

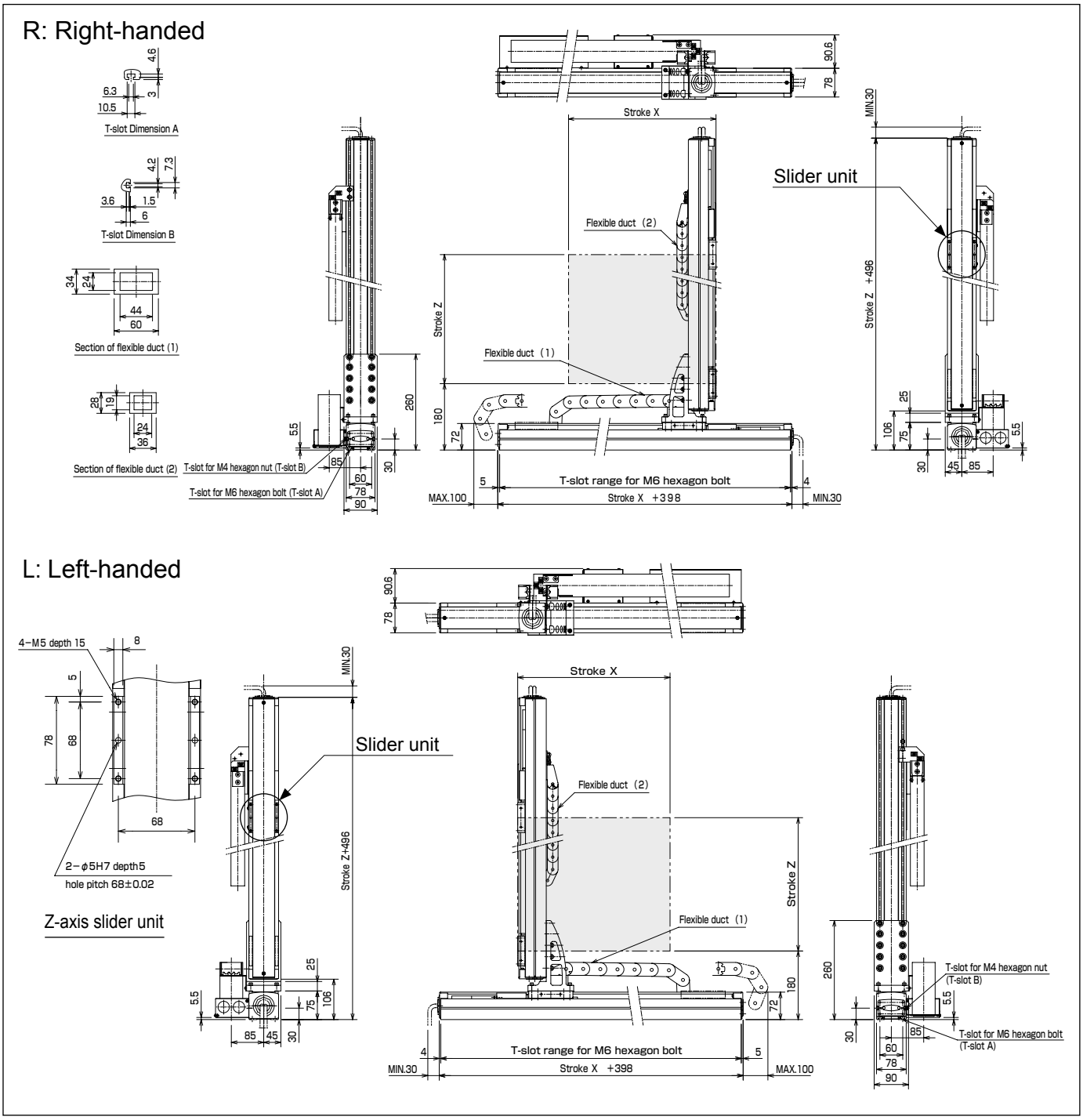

Discontinue

Example of Orthogonal Axes Combination: X-Z Flexible duct spec

[Specifications]

	X-axis	Z-axis
Axis type	KBB-10E-ST-M20N-□0	KBB-10E-ST-S10B-□5
Stroke (in increments of 100 mm)	100 to 1000mm	150 to 450mm
Max. speed	1200mm/s (Note 1)	600mm/s
Positioning repeatability	±0.01mm	
Lead	20mm	10mm
Motor output	100W	100W, with brake
Resolution	0.01mm	

Acceleration/deceleration time when the maximum speed is set: 0.36 sec. or over

Ball screw type

X-axis: Ball screw driven
Motor straight
Z-axis: Ball screw driven
Motor straight

Note 1: When the stroke is as given below, the maximum speed differs.

	Stroke (mm)	Max. speed (mm/s)
X-axis	700	1000
	800	800
	900 to 1000	600

Max. load capacity (kg) (Note 2)	Z-axis stroke			
	150mm	250mm	350mm	450mm
	8.0	6.0	4.0	2.0

Note 2: Load capacity when a regenerative discharge unit (ABSU-2000) is used.

R: Right-handed

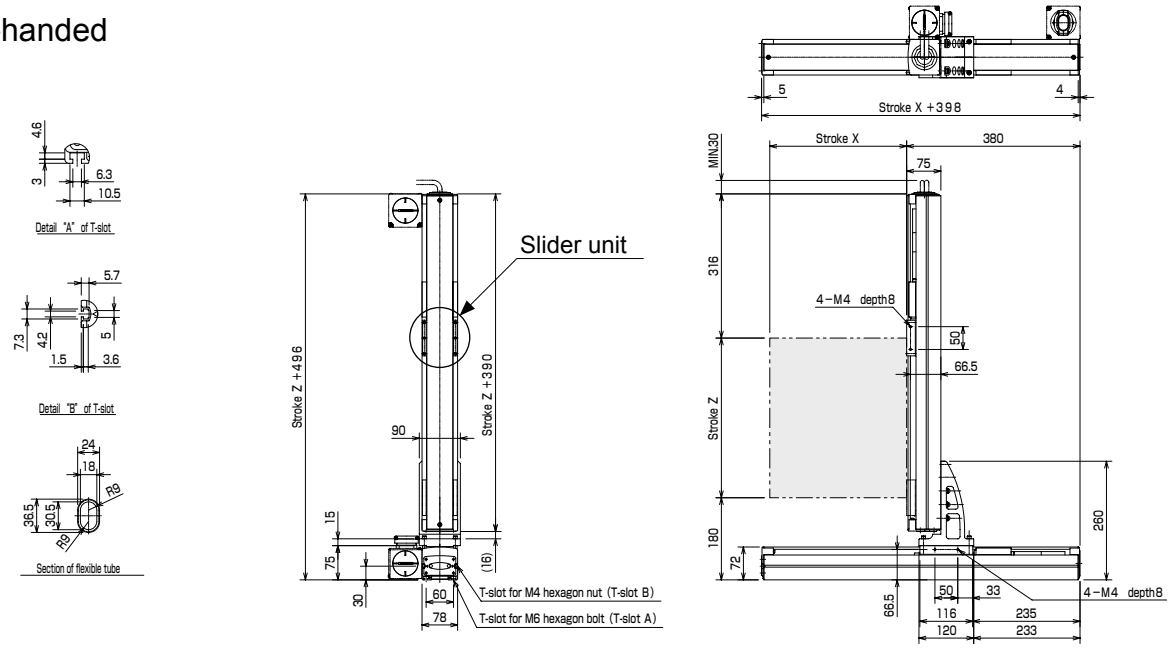

L: Left-handed

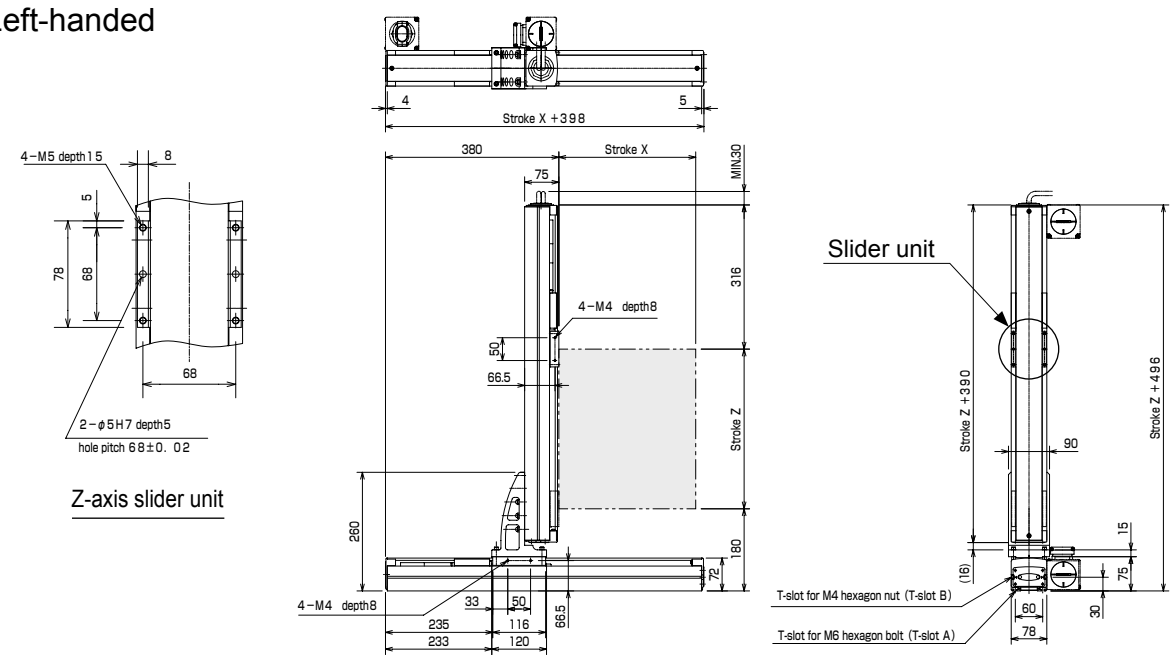

Example of Orthogonal Axes Combination: X-Z Flexible duct spec

[Specifications]

	X-axis	Z-axis
Axis type	KBB-30E-ST-M20N-□0	KBB-10E-ST-M10B-□0
Stroke (in increments of 100 mm)	150 to 1050mm	100 to 700mm
Max. speed	1200mm/s (Note 1)	600mm/s
Positioning repeatability	±0.01mm	
Lead	20mm	10mm
Motor output	100W	100W, with brake
Resolution	0.01mm	

Acceleration/deceleration time when the maximum speed is set: 0.6 sec. or over

Ball screw type

X-axis: Ball screw driven
Motor straight
Z-axis: Ball screw driven
Motor straight

Note 1: When the stroke is as given below, the maximum speed differs.

	Stroke (mm)	Max. speed (mm/s)
X-axis	750	1000
	850	800
	950 to 1050	600
Z-axis	700	500

Max. load capacity (kg) (Note 2)	Z-axis stroke						
	100mm	200mm	300mm	400mm	500mm	600mm	700mm
	9.0	8.0	8.0	8.0	6.0	4.0	2.0

Note 2: Load capacity when a regenerative discharge unit (ABSU-2000) is used.

R: Right-handed

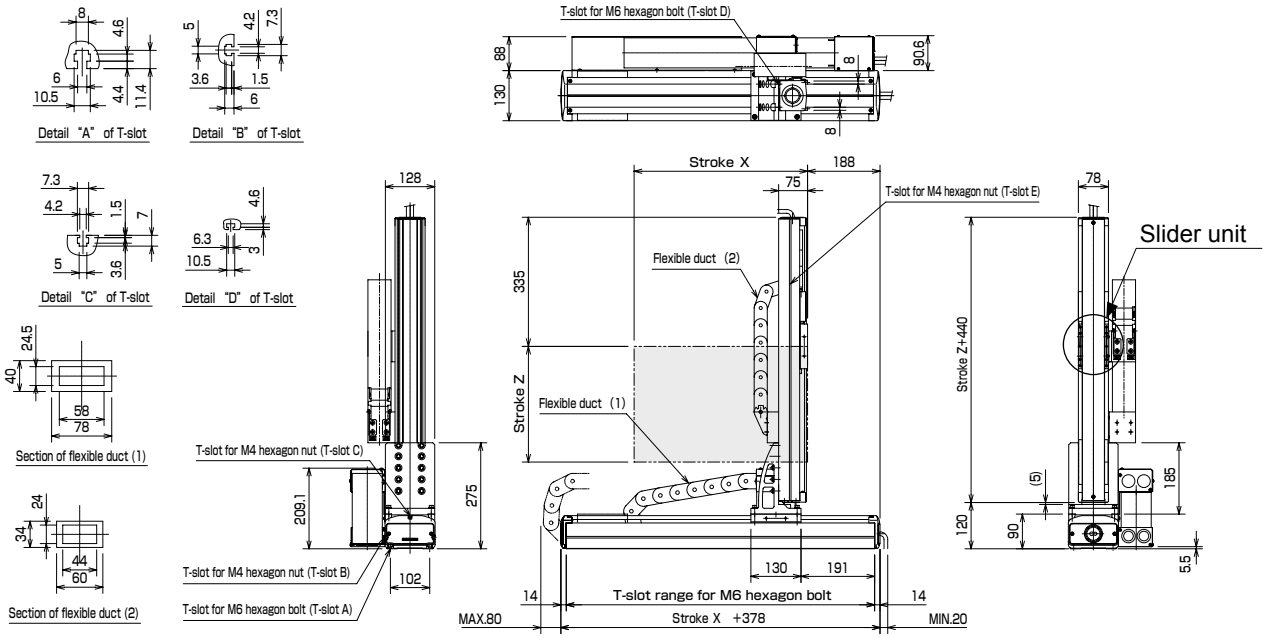

L: Left-handed

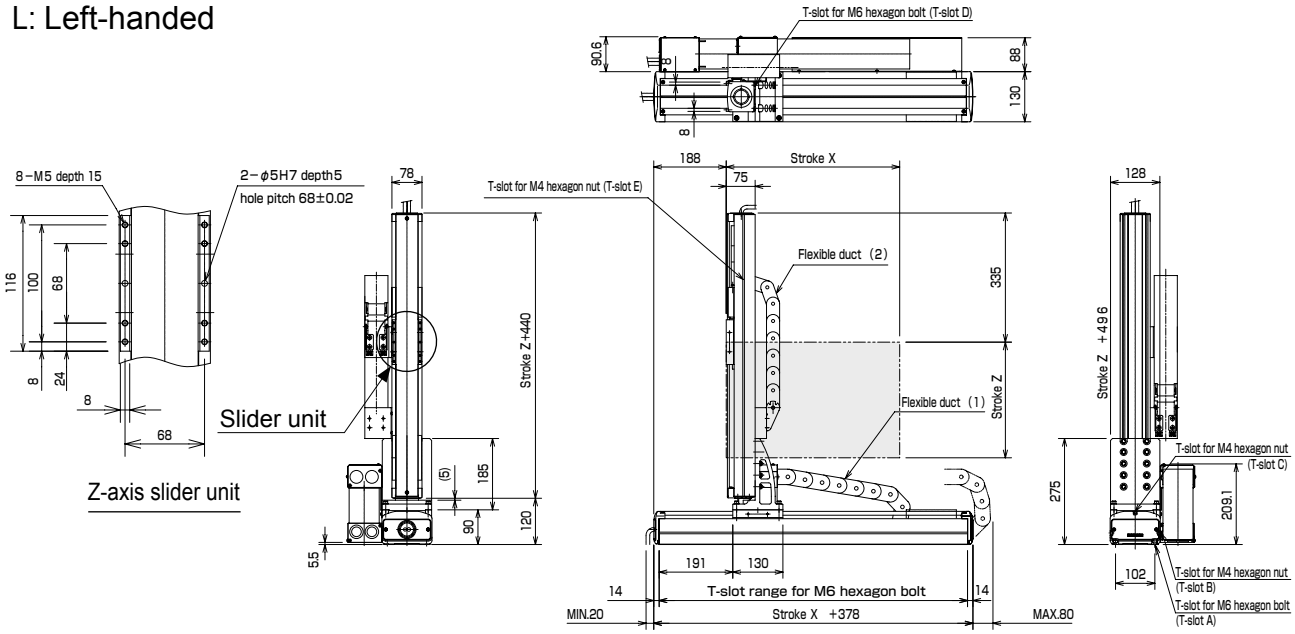

Discontinue

Example of Orthogonal Axes Combination: X-Z Flexible duct spec

[Specifications]

	X-axis	Z-axis
Axis type	KBB-30E-ST-M20N-□0	KBB-10E-ST-M10B-□0
Stroke (in increments of 100 mm)	150 to 1050mm	100 to 700mm
Max. speed	1200mm/s (Note 1)	600mm/s (Note 1)
Positioning repeatability	±0.01mm	
Lead	20mm	10mm
Motor output	100W	100W, with brake
Resolution	0.01mm	

Acceleration/deceleration time when the maximum speed is set: 0.6 sec. or over

Ball screw type

X-axis: Ball screw driven
Motor straight
Z-axis: Ball screw driven
Motor straight

Note 1: When the stroke is as given below, the maximum speed differs.

	Stroke (mm)	Max. speed (mm/s)
X-axis	750	1000
	850	800
	950 to 1050	600
Z-axis	700	500

Max. load capacity (kg) (Note 2)	Z-axis stroke						
	100mm	200mm	300mm	400mm	500mm	600mm	700mm
	9.0	8.0	8.0	8.0	6.0	4.0	2.0

Note 2: Load capacity when a regenerative discharge unit (ABSU-2000) is used.

R: Right-handed

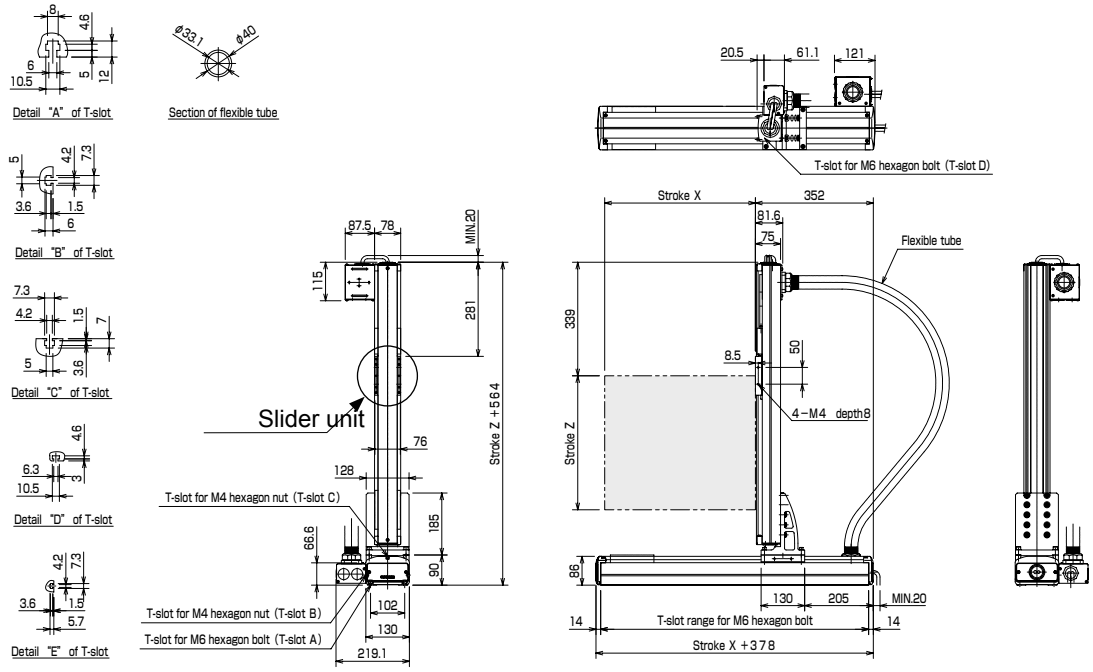

L: Left-handed

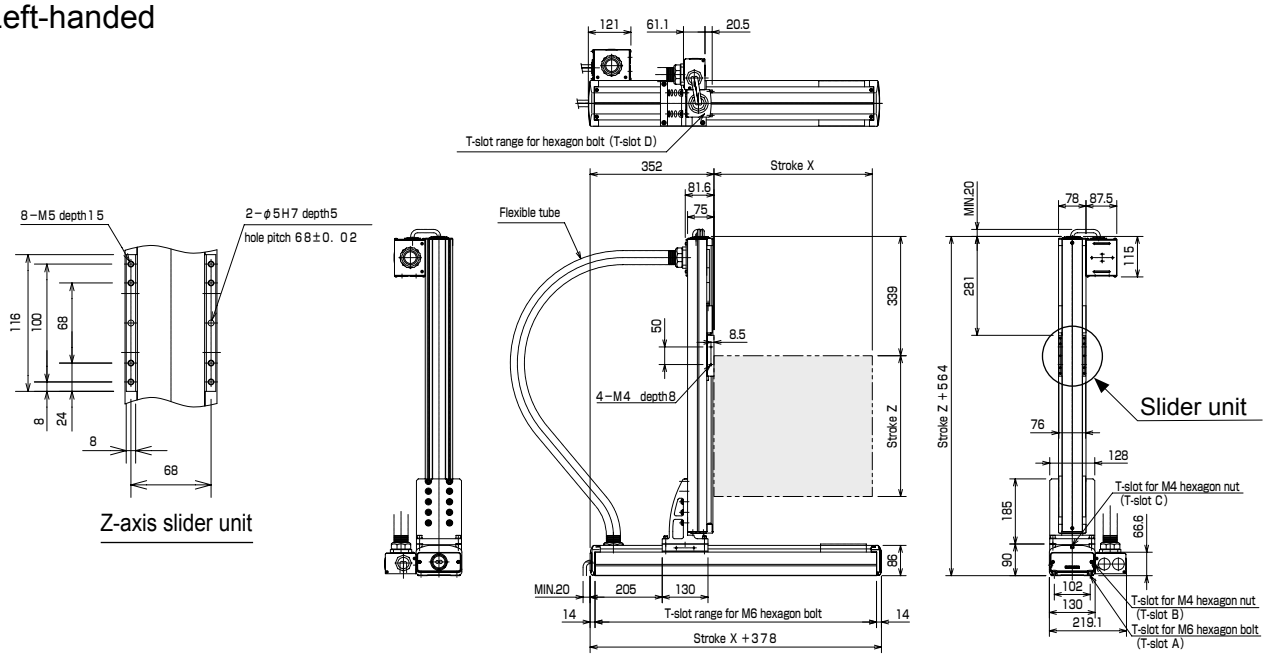

Example of Orthogonal Axes Combination: X-Z Flexible duct spec

[Specifications]

	X-axis	Z-axis
Axis type	KBB-30F-ST-M20N-□0	KBB-10E-ST-M10B-□0
Stroke (in increments of 100 mm)	100 to 1000mm	100 to 900mm
Max. speed	1200mm/s (Note 1)	600mm/s (Note 1)
Positioning repeatability	±0.01mm	
Lead	20mm	10mm
Motor output	200W	100W, with brake
Resolution	0.01mm	

Acceleration/deceleration time when the maximum speed is set: 0.36 sec. or over

Ball screw type

X-axis: Ball screw driven
Motor straight
Z-axis: Ball screw driven
Motor straight

Note 1: When the stroke is as given below, the maximum speed differs.

	Stroke (mm)	Max. speed (mm/s)
X-axis	750	1000
	850	800
	950 to 1050	600
Z-axis	700	500
	800	400
	900	300

Max. load capacity (kg) (Note 2)	Z-axis stroke								
	100mm	200mm	300mm	400mm	500mm	600mm	700mm	800mm	900mm
	12.0	12.0	12.0	12.0	12.0	10.0	4.0	2.0	2.0

Note 2: Load capacity when a regenerative discharge unit (ABSU-2000) is used.

R: Right-handed

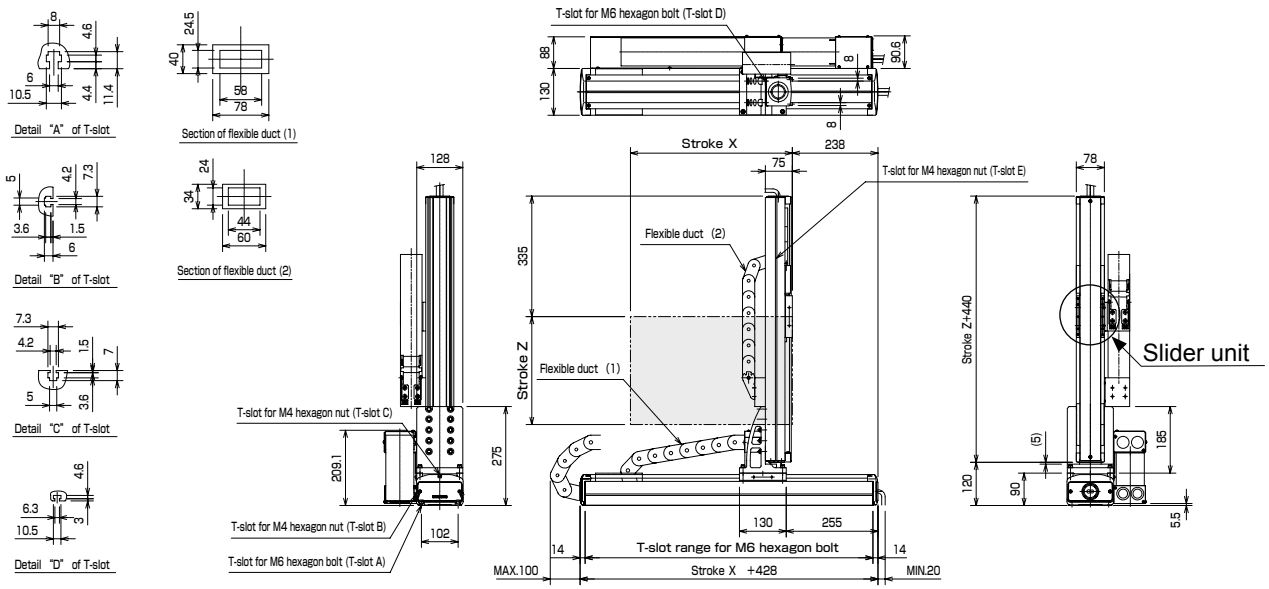

L: Left-handed

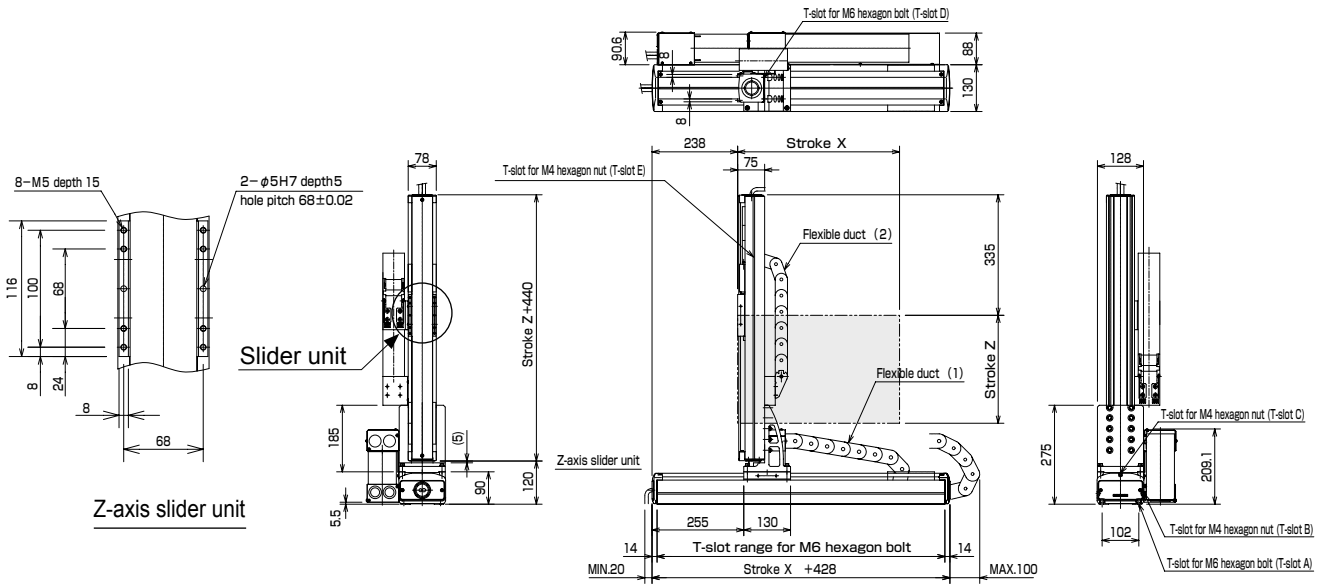

Discontinue

Example of Orthogonal Axes Combination: X-Z Flexible duct spec

[Specifications]

	X-axis	Z-axis
Axis type	KBB-30F-ST-M20N-□0	KBB-10E-ST-M10B-□0
Stroke (in increments of 100 mm)	100 to 1000mm	100 to 900mm
Max. speed	1200mm/s (Note 1)	600mm/s (Note 1)
Positioning repeatability	±0.01mm	
Lead	20mm	10mm
Motor output	200W	100W, with brake
Resolution	0.01mm	

Acceleration/deceleration time when the maximum speed is set: 0.36 sec. or over

Ball screw type

X-axis: Ball screw driven
Motor straight
Z-axis: Ball screw driven
Motor straight

Note 1: When the stroke is as given below, the maximum speed differs.

	Stroke (mm)	Max. speed (mm/s)
X-axis	750	1000
	850	800
	950 to 1050	600
Z-axis	700	500
	800	400
	900	300

Max. load capacity (kg) (Note 2)	Z-axis stroke								
	100mm	200mm	300mm	400mm	500mm	600mm	700mm	800mm	900mm
	12.0	12.0	12.0	12.0	12.0	10.0	4.0	2.0	2.0

Note 2: Load capacity when a regenerative discharge unit (ABSU-2000) is used.

R: Right-handed

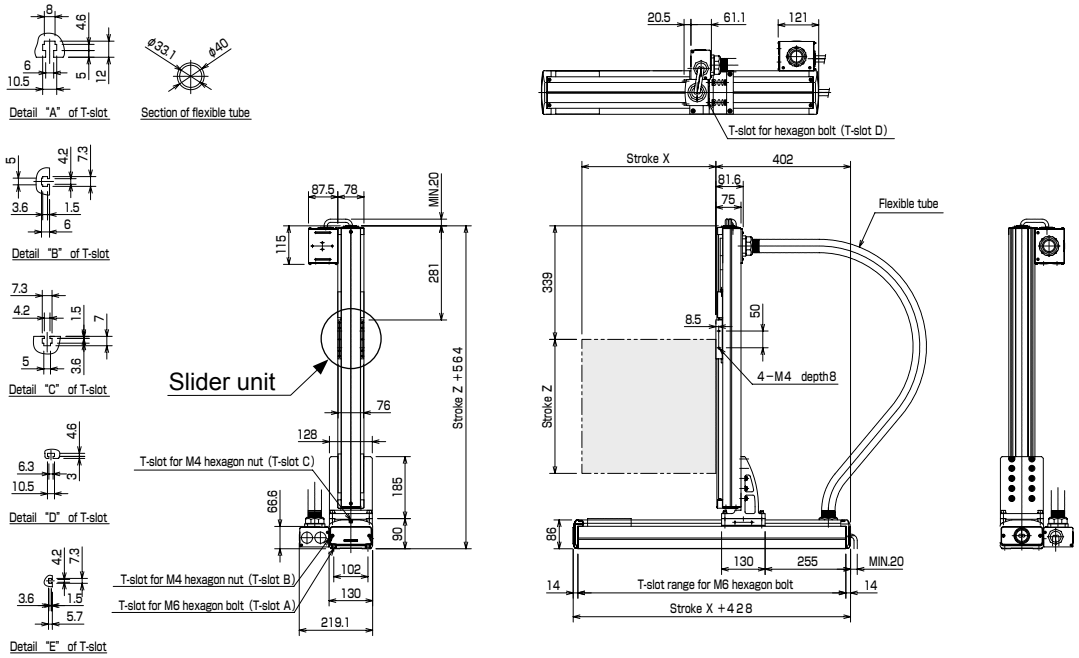

L: Left-handed

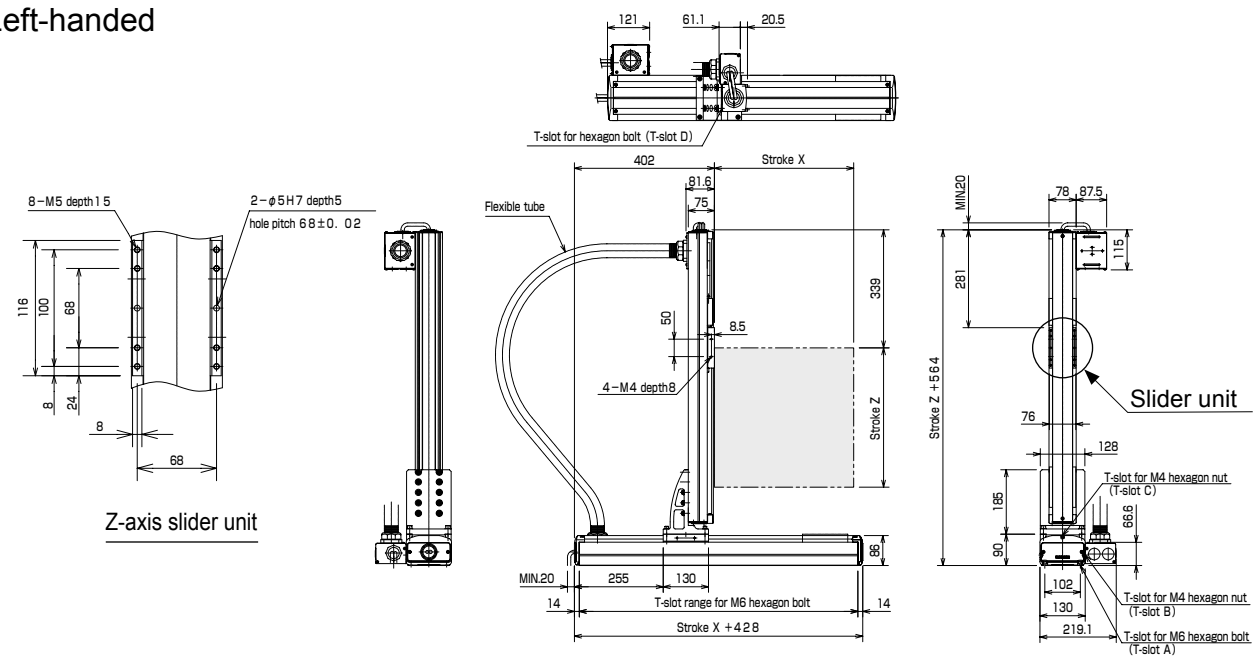

Example of Orthogonal Axes Combination: X-Z Flexible duct spec

[Specifications]

	X-axis	Z-axis
Axis type	KBB-50F-ST-M20N-□0	KBB-30E-ST-M10B-□0
Stroke (in increments of 100 mm)	200 to 1500mm	150 to 1050mm
Max. speed	1200mm/s (Note 1)	600mm/s (Note 1)
Positioning repeatability	±0.01mm	
Lead	20mm	10mm
Motor output	200W	100W, with brake
Resolution	0.01mm	

Acceleration/deceleration time when the maximum speed is set: 0.36 sec. or over

Ball screw type

X-axis: Ball screw driven
Motor straight
Z-axis: Ball screw driven
Motor straight

Note 1: When the stroke is as given below, the maximum speed differs.

	Stroke (mm)	Max. speed (mm/s)
X-axis	700 to 800	1100
	900 to 1000	1000
	1100 to 1200	700
	1300	500
	1400	400
	1500	300
Z-axis	750	500
	850	400
	950 to 1050	300

Max. load capacity (kg) (Note 2)	Z-axis stroke									
	150mm	250mm	350mm	450mm	550mm	650mm	750mm	850mm	950mm	1050mm
	12.0	12.0	12.0	12.0	12.0	12.0	12.0	12.0	12.0	8.0

Note 2: Load capacity when a regenerative discharge unit (ABSU-2000) is used.

R: Right-handed

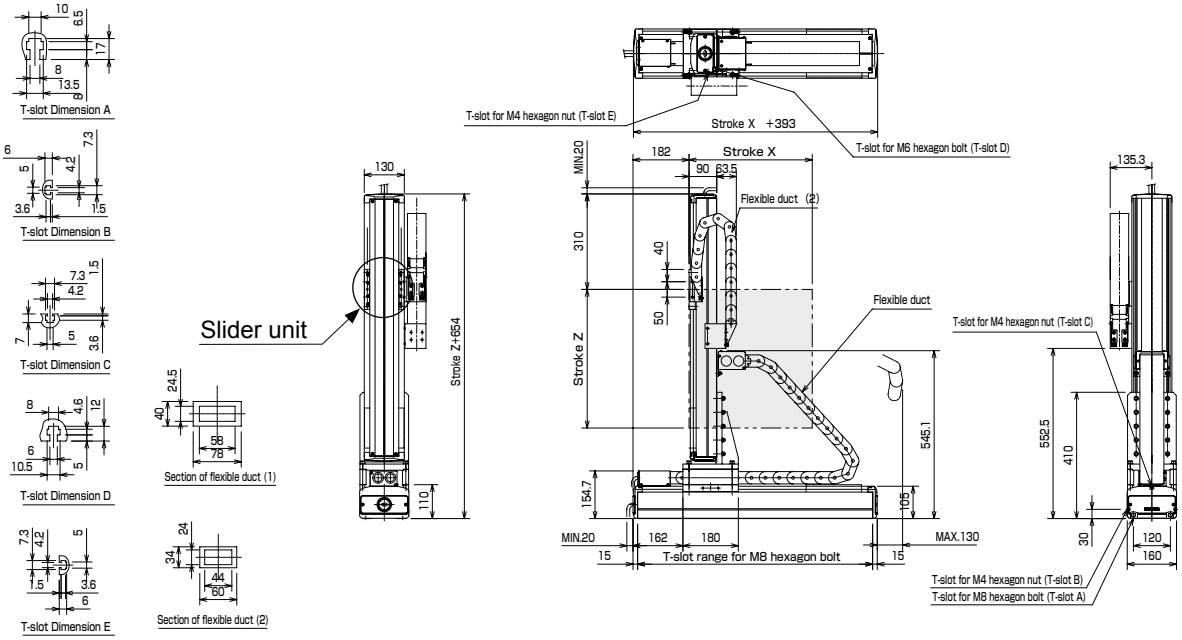

L: Left-handed

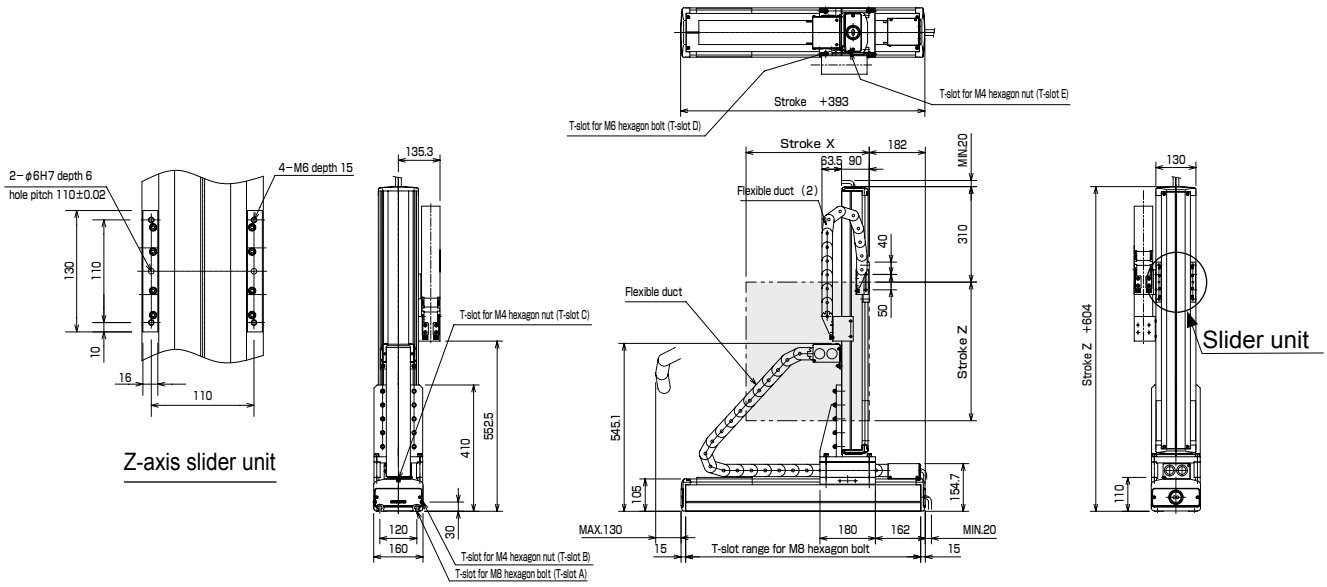

Discontinue

Example of Orthogonal Axes Combination: X-Z Flexible duct spec

[Specifications]

	X-axis	Z-axis
Axis type	KBB-50F-ST-M20N-□0	KBB-30E-ST-M10B-□0
Stroke (in increments of 100 mm)	200 to 1500mm	150 to 1050mm
Max. speed	1200mm/s (Note 1)	600mm/s (Note 1)
Positioning repeatability	±0.01mm	
Lead	20mm	10mm
Motor output	200W	100W, with brake
Resolution	0.01mm	

Acceleration/deceleration time when the maximum speed is set: 0.36 sec. or over

Ball screw type

X-axis: Ball screw driven
Motor straight
Z-axis: Ball screw driven
Motor straight

Note 1: When the stroke is as given below, the maximum speed differs.

	Stroke (mm)	Max. speed (mm/s)
X-axis	700 to 800	1100
	900 to 1000	1000
	1100 to 1200	700
	1300	500
	1400	400
	1500	300
Z-axis	750	500
	850	400
	950 to 1050	300

Max. load capacity (kg) (Note 2)	Z-axis stroke									
	150mm	250mm	350mm	450mm	550mm	650mm	750mm	850mm	950mm	1050mm
	12.0	12.0	12.0	12.0	12.0	12.0	12.0	12.0	12.0	8.0

Note 2: Load capacity when a regenerative discharge unit (ABSU-2000) is used.

R: Right-handed

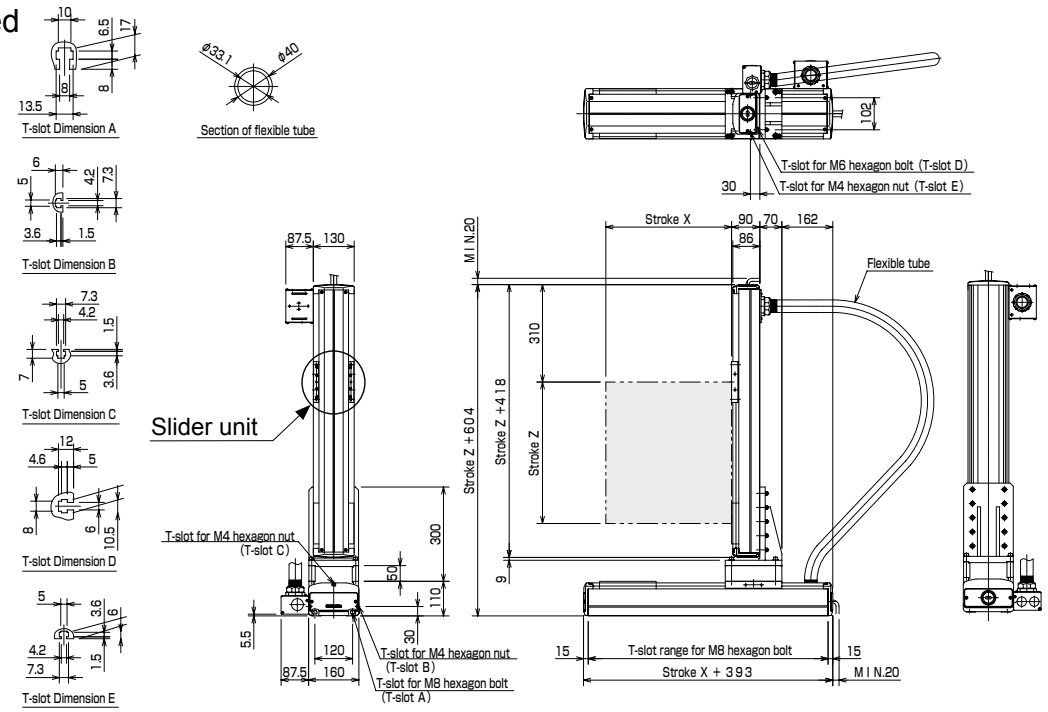

L: Left-handed

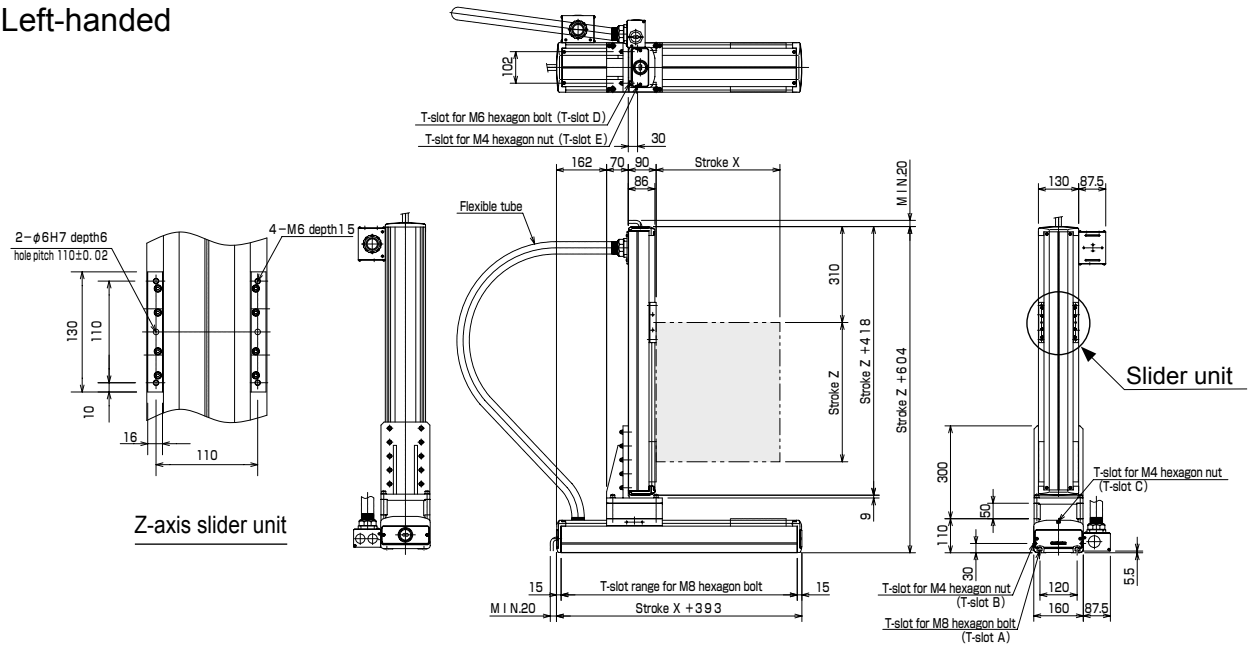

Example of Orthogonal Axes Combination: X-Z Flexible duct spec

[Specifications]

	X-axis	Z-axis
Axis type	KBB-50F-ST-M20N-□0	KBB-30F-ST-M10B-□0
Stroke (in increments of 100 mm)	200 to 1500mm	100 to 1000mm
Max. speed	1200mm/s (Note 1)	600mm/s (Note 1)
Positioning repeatability	±0.01mm	
Lead	20mm	10mm
Motor output	200W	200W, with brake
Resolution	0.01mm	

Acceleration/deceleration time when the maximum speed is set: 0.36 sec. or over

Ball screw type

X-axis: Ball screw driven
Motor straight
Z-axis: Ball screw driven
Motor straight

Note 1: When the stroke is as given below, the maximum speed differs.

	Stroke (mm)	Max. speed (mm/s)
X-axis	700 to 800	1100
	900 to 1000	1000
	1100 to 1200	700
	1300	500
	1400	400
	1500	300
Z-axis	700	500
	800	400
	900 to 1000	300

Max. load capacity (kg) (Note 2)	Z-axis stroke									
	100mm	200mm	300mm	400mm	500mm	600mm	700mm	800mm	900mm	1000mm
	20.0	20.0	20.0	20.0	20.0	20.0	16.0	13.0	9.0	7.0

Note 2: Load capacity when a regenerative discharge unit (ABSU-2000) is used.

R: Right-handed

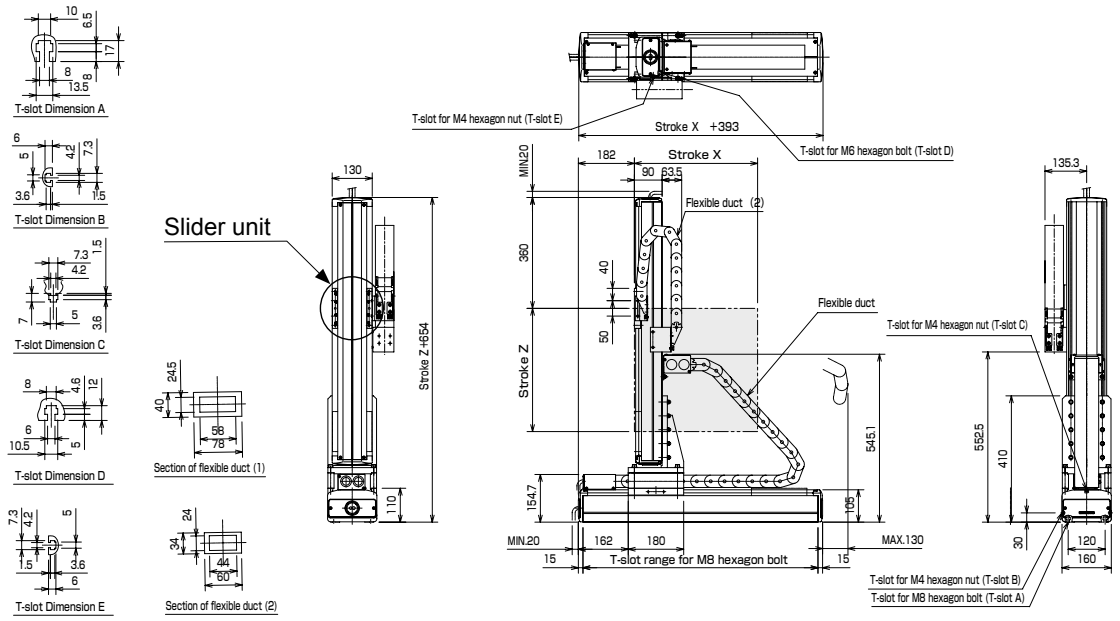

L: Left-handed

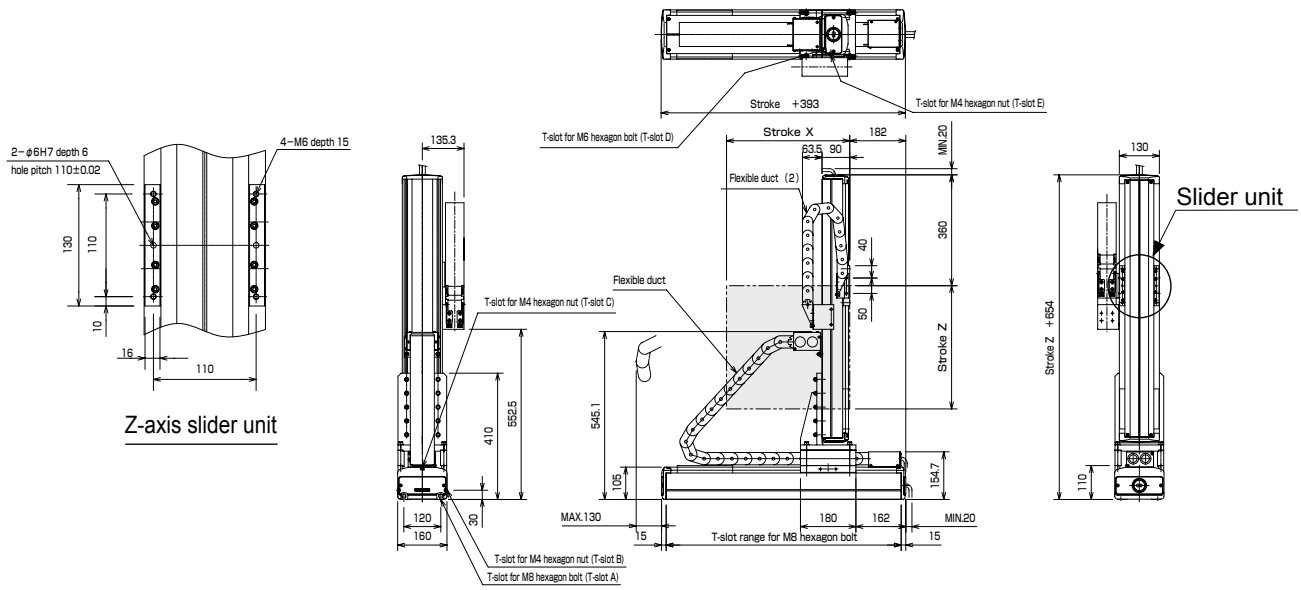

Discontinue

Example of Orthogonal Axes Combination: X-Z Flexible duct spec

[Specifications]

	X-axis	Z-axis
Axis type	KBB-50F-ST-M20N-□0	KBB-30F-ST-M10B-□0
Stroke (in increments of 100 mm)	200 to 1500mm	100 to 1000mm
Max. speed	1200mm/s (Note 1)	600mm/s (Note 1)
Positioning repeatability	±0.01mm	
Lead	20mm	10mm
Motor output	200W	200W, with brake
Resolution	0.01mm	

Acceleration/deceleration time when the maximum speed is set: 0.36 sec. or over

Ball screw type

X-axis: Ball screw driven
Motor straight
Z-axis: Ball screw driven
Motor straight

Note 1: When the stroke is as given below, the maximum speed differs.

	Stroke (mm)	Max. speed (mm/s)
X-axis	700 to 800	1100
	900 to 1000	1000
	1100 to 1200	700
	1300	500
	1400	400
	1500	300
Z-axis	700	500
	800	400
	900 to 1000	300

Max. load capacity (kg) (Note 2)	Z-axis stroke									
	100mm	200mm	300mm	400mm	500mm	600mm	700mm	800mm	900mm	1000mm
	20.0	20.0	20.0	20.0	20.0	20.0	16.0	13.0	9.0	7.0

Note 2: Load capacity when a regenerative discharge unit (ABSU-2000) is used.

R: Right-handed

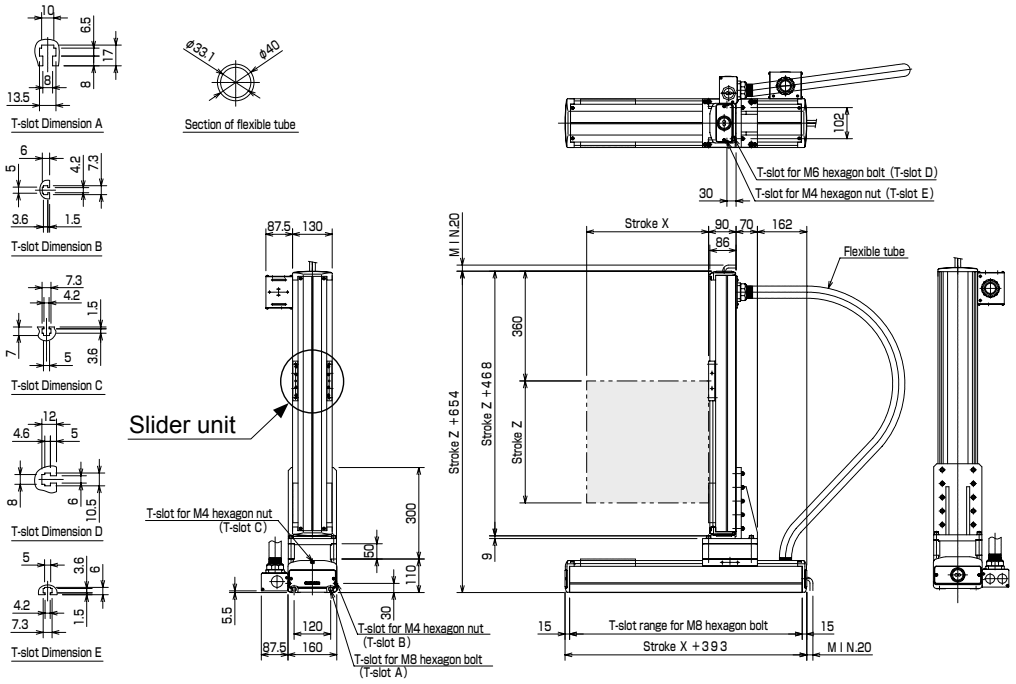

L: Left-handed

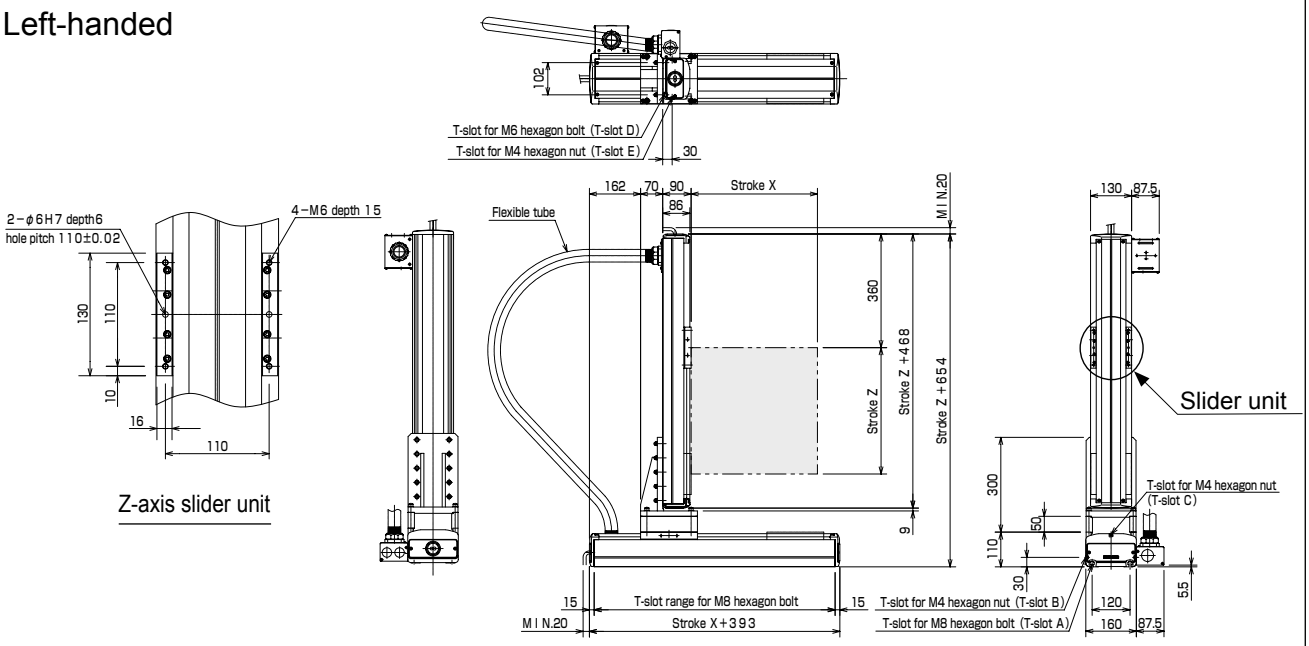

Example of Orthogonal Axes Combination: X-Z Flexible duct spec

[Specifications]

	X-axis	Z-axis
Axis type	KBB-50F-ST-M20N-□0	KBB-50F-ST-M10B-□0
Stroke (in increments of 100 mm)	200 to 1500mm	200 to 1000mm
Max. speed	1200mm/s (Note 1)	600mm/s (Note 1)
Positioning repeatability	±0.01mm	
Lead	20mm	10mm
Motor output	200W	200W, with brake
Resolution	0.01mm	

Acceleration/deceleration time when the maximum speed is set: 0.6 sec. or over

Ball screw type

X-axis: Ball screw driven
Motor straight
Z-axis: Ball screw driven
Motor straight

Note 1: When the stroke is as given below, the maximum speed differs.

	Stroke (mm)	Max. speed (mm/s)
X-axis	700 to 800	1100
	900 to 1000	1000
	1100 to 1200	700
	1300	500
	1400	400
	1500	300
Z-axis	700 to 800	550
	900 to 1000	500

Max. load capacity (kg) (Note 2)	Z-axis stroke								
	200mm	300mm	400mm	500mm	600mm	700mm	800mm	900mm	1000mm
	25.0	25.0 (23.0)	25.0 (21.0)	25.0 (19.0)	23.0 (17.0)	20.0 (15.0)	19.0 (13.0)	12.0 (11.0)	10.0

Note 2: Load capacity when a regenerative discharge unit (ABSU-2000) is used.
When the X-axis speed exceeds 1,000 m/s, the values in parentheses are used for the max. load capacity.

R: Right-handed

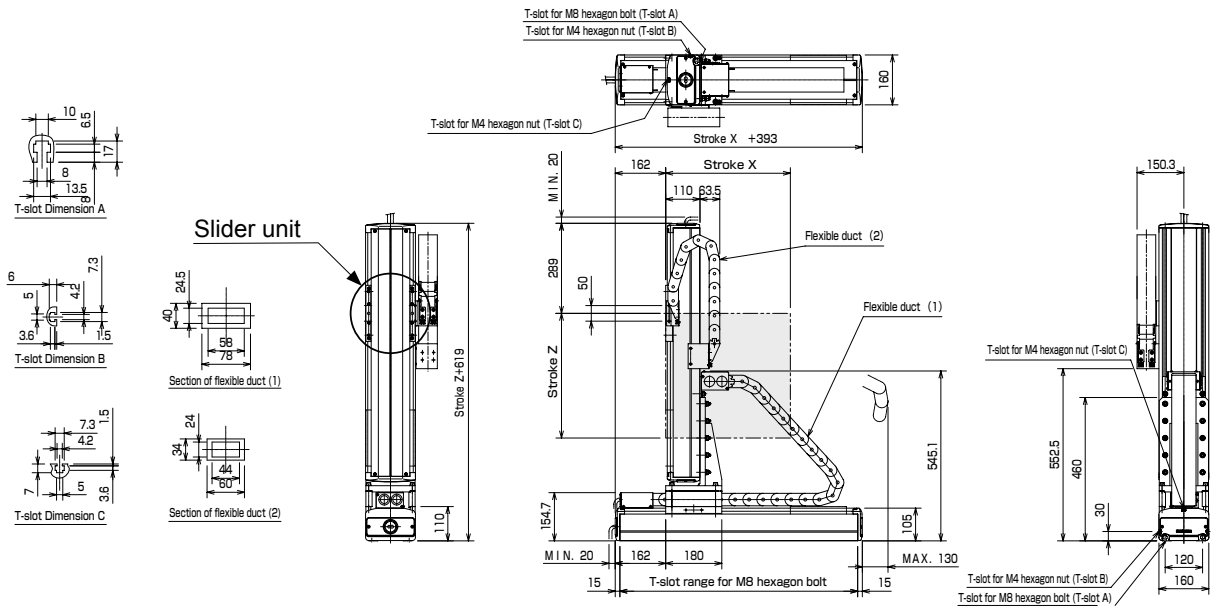

L: Left-handed

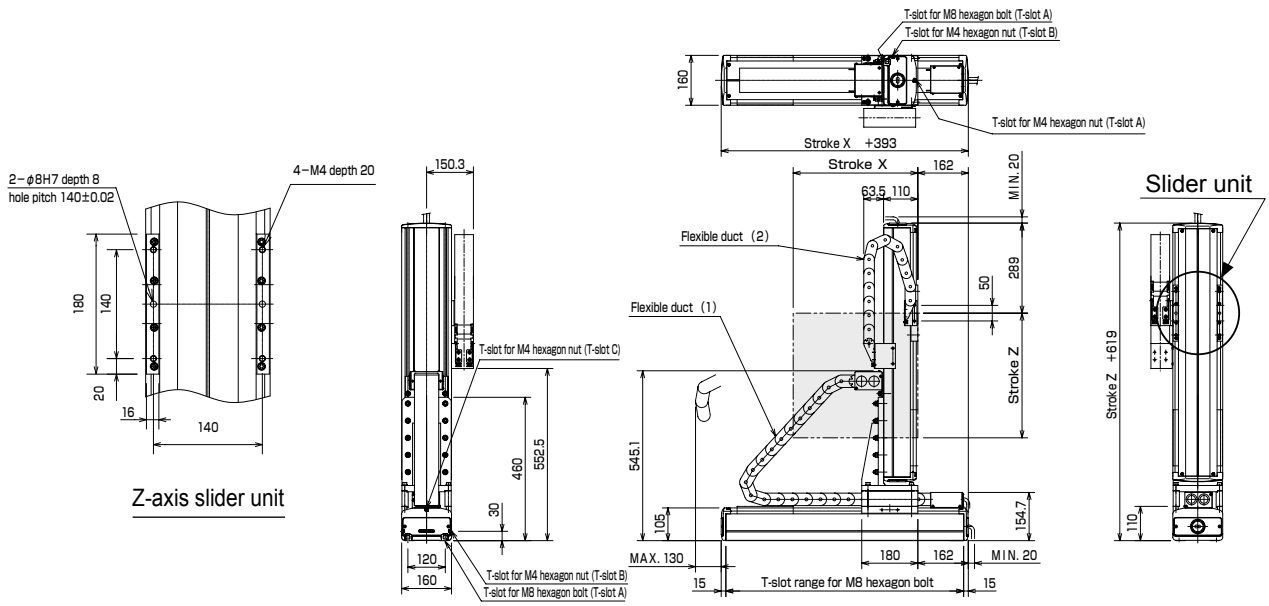

Discontinue

Example of Orthogonal Axes Combination: X-Z Flexible duct spec

[Specifications]

	X-axis	Z-axis
Axis type	KBB-50F-ST-M20N-□0	KBB-50F-ST-M10B-□0
Stroke (in increments of 100 mm)	200 to 1500mm	200 to 1000mm
Max. speed	1200mm/s (Note 1)	600mm/s (Note 1)
Positioning repeatability	±0.01mm	
Lead	20mm	10mm
Motor output	200W	200W, with brake
Resolution	0.01mm	

Acceleration/deceleration time when the maximum speed is set: 0.6 sec. or over

Ball screw type

X-axis: Ball screw driven
Motor straight
Z-axis: Ball screw driven
Motor straight

Note 1: When the stroke is as given below, the maximum speed differs.

	Stroke (mm)	Max. speed (mm/s)
X-axis	700 to 800	1100
	900 to 1000	1000
	1100 to 1200	700
	1300	500
	1400	400
	1500	300
Z-axis	700 to 800	550
	900 to 1000	500

Max. load capacity (kg) (Note 2)	Z-axis stroke								
	200mm	300mm	400mm	500mm	600mm	700mm	800mm	900mm	1000mm
	25.0	25.0 (23.0)	25.0 (21.0)	25.0 (19.0)	23.0 (17.,0)	20.0 (15.0)	19.0 (13.0)	12.0 (11.0)	10.0

Note 2: Load capacity when a regenerative discharge unit (ABSU-2000) is used.
When the X-axis speed exceeds 1,000 m/s, the values in parentheses are used for the max. load capacity.

R: Right-handed

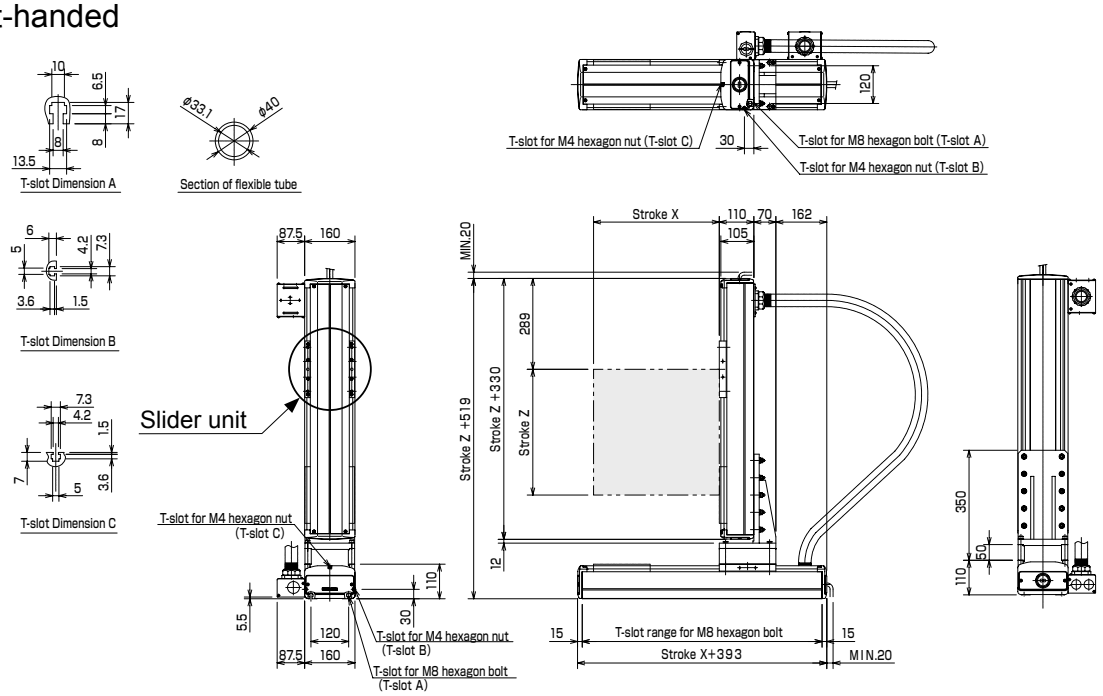

L: Left-handed

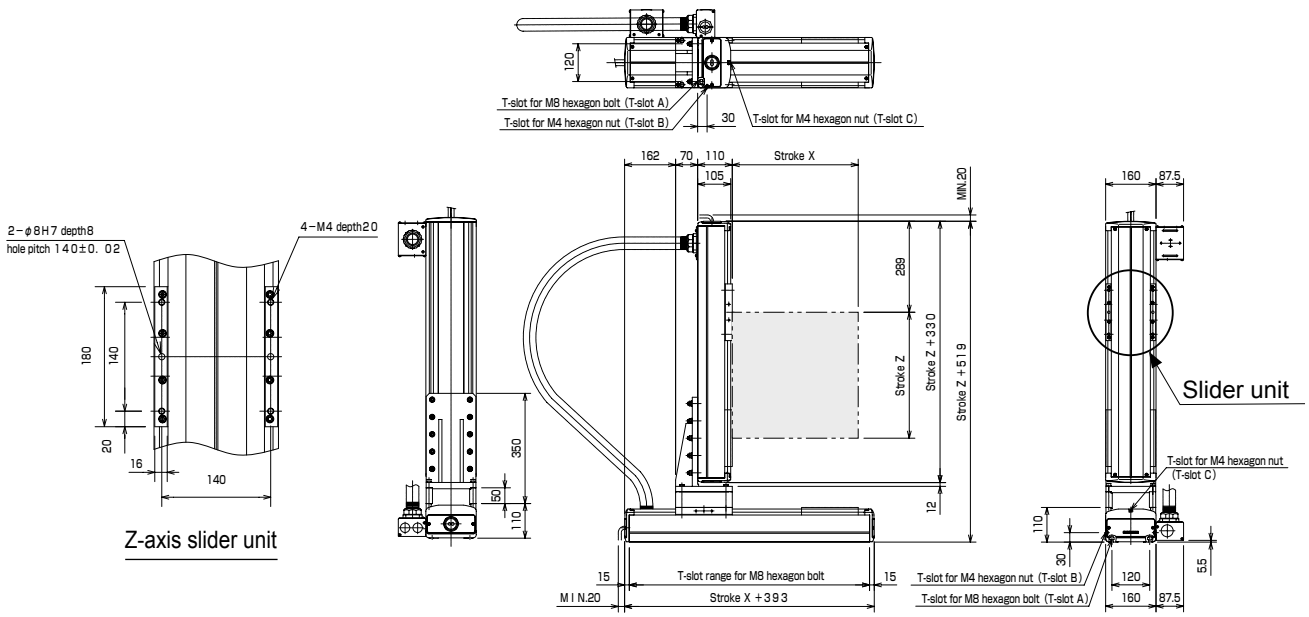

Example of Orthogonal Axes Combination: X-Z Flexible duct spec

[Specifications]

	X-axis	Z-axis
Axis type	KBB-10E-B□-M21N-□0	KBB-10E-ST-S10B-□5
Stroke (in increments of 100 mm)	100 to 1800mm	150 to 450mm
Max. speed	1000mm/s	600mm/s
Positioning repeatability	±0.05mm	±0.01mm
Lead	21mm (lead converted into ball screw)	10mm
Motor output	100W	100W, with brake
Resolution	0.01mm	

Acceleration/deceleration time when the maximum speed is set: 0.5 sec. or over

Timing belt type

X-axis: Timing belt driven
Side mounted motor
Z-axis: Ball screw driven
Motor straight

Max. load capacity (kg)	Z-axis stroke			
	150mm	250mm	350mm	450mm
	7.0	6.0	4.0	2.0

R: Right-handed

The values in ( ) are applicable when the X-axis stroke is 1,100 mm or over.

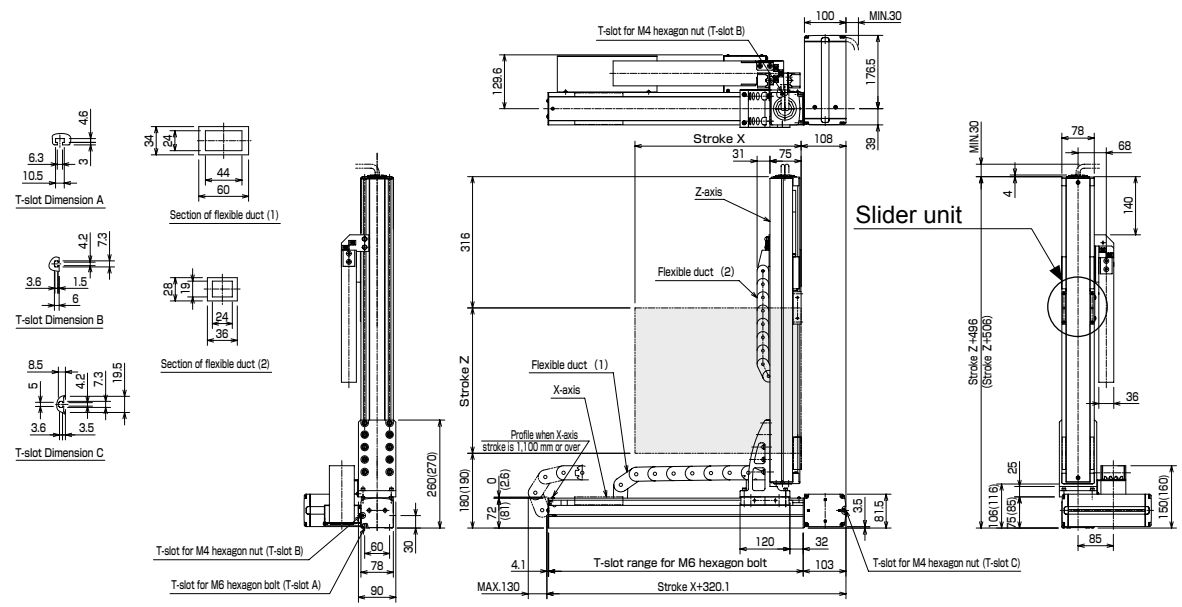

L: Left-handed

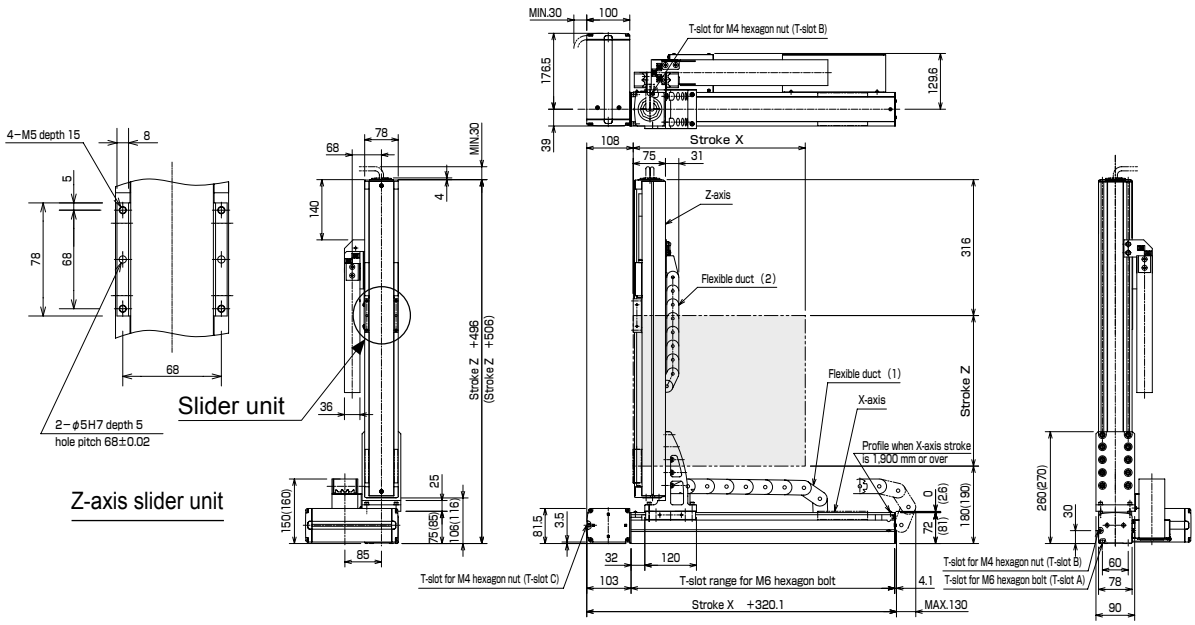

Discontinue

Example of Orthogonal Axes Combination: X-Z Flexible duct spec

[Specifications]

	X-axis	Z-axis
Axis type	KBB-10F-B□-M21N-□0	KBB-10E-ST-S10B-□5
Stroke (in increments of 100 mm)	100 to 1800mm	150 to 450mm
Max. speed	1000mm/s	600mm/s
Positioning repeatability	±0.05mm	±0.01mm
Lead	21mm (lead converted into ball screw)	10mm
Motor output	200W	100W, with brake
Resolution	0.01mm	

Acceleration/deceleration time when the maximum speed is set: 0.36 sec. or over

Timing belt type

X-axis: Timing belt driven
Side mounted motor
Z-axis: Ball screw driven
Motor straight

Max. load capacity (kg)	Z-axis stroke			
	150mm	250mm	350mm	450mm
	8.0	6.0	4.0	2.0

R: Right-handed

The values in ( ) are applicable when the X-axis stroke is 1,100 mm or over.

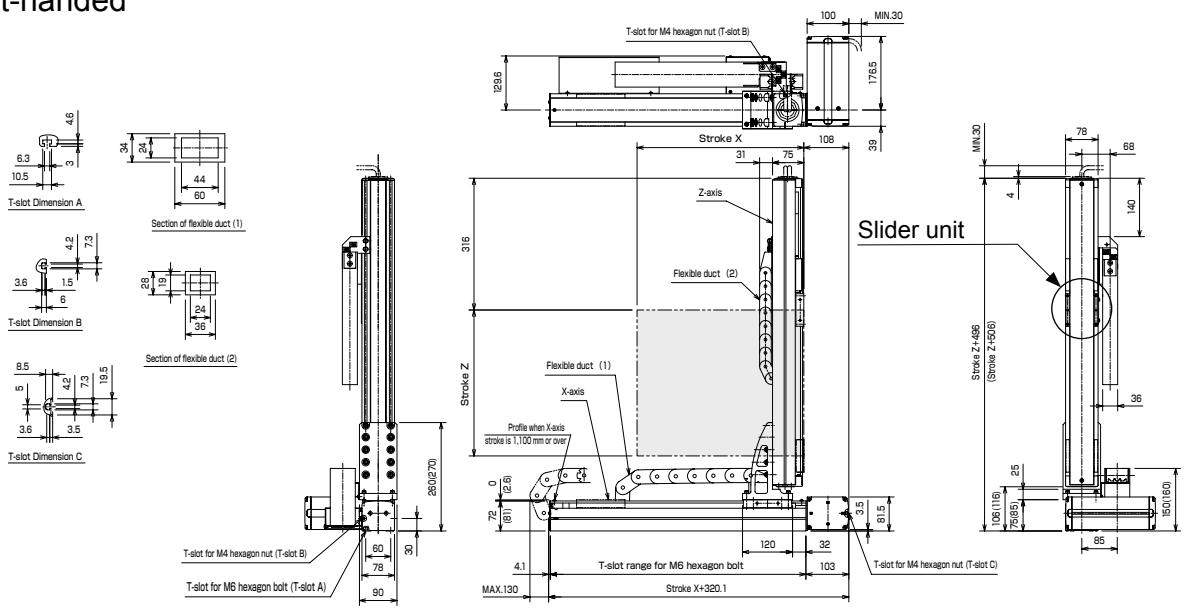

L: Left-handed

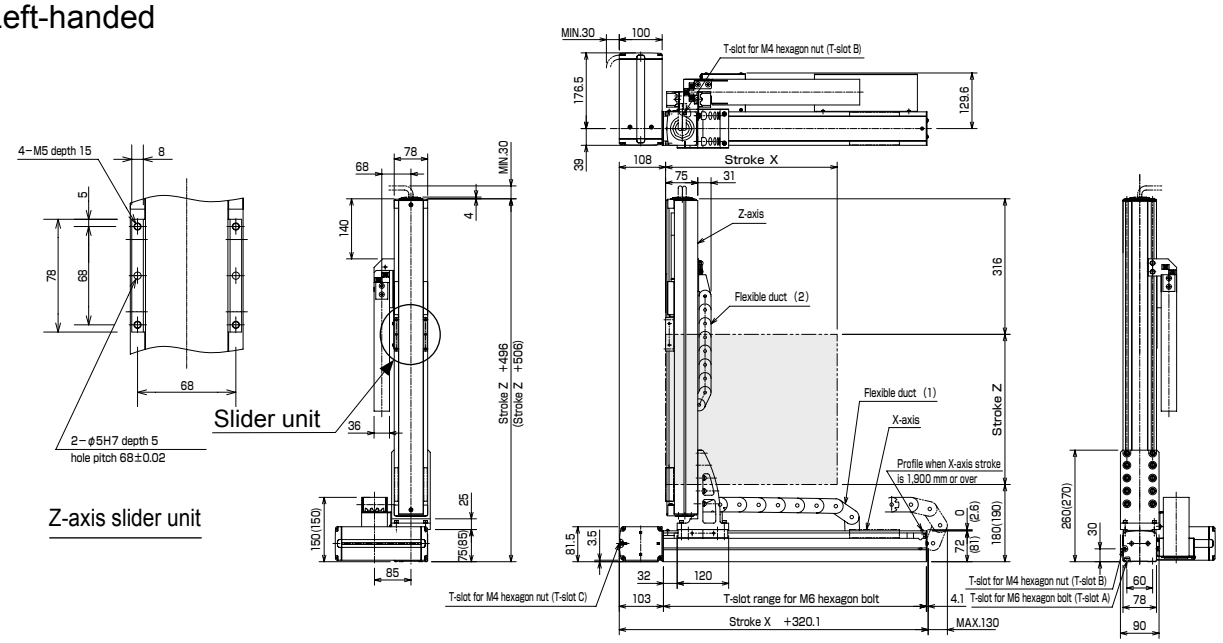

Example of Orthogonal Axes Combination: X-Z Flexible duct spec

[Specifications]

	X-axis	Z-axis
Axis type	KBB-30E-B□-M21N-□0	KBB-10E-ST-S10B-□0
Stroke (in increments of 100 mm)	100 to 2500mm	100 to 700mm
Max. speed	1000mm/s	600mm/s (Note 1)
Positioning repeatability	±0.05mm	±0.01mm
Lead	21mm (lead converted into ball screw)	10mm
Motor output	100W	100W, with brake
Resolution	0.01mm	

Acceleration/deceleration time when the maximum speed is set: 0.5 sec. or over

Timing belt type

X-axis: Timing belt driven
Side mounted motor
Z-axis: Ball screw driven
Motor straight

Note 1: When the stroke is as given below, the maximum speed differs.

	Stroke (mm)	Max. speed (mm/s)
Z-axis	700	500

Max. load capacity (kg)	Z-axis stroke						
	100mm	200mm	300mm	400mm	500mm	600mm	700mm
	5.0	4.0	4.0	3.0	2.0	2.0	1.0

R: Right-handed

The values in ( ) are applicable when the X-axis stroke is 1,900 mm or over.

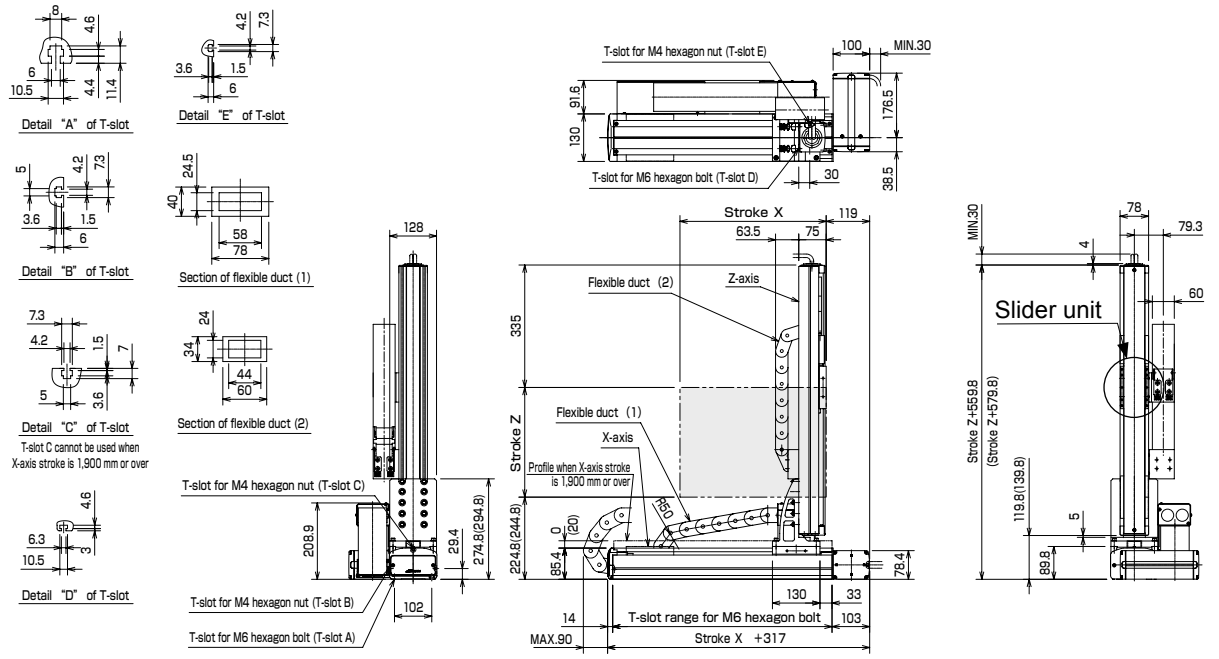

L: Left-handed

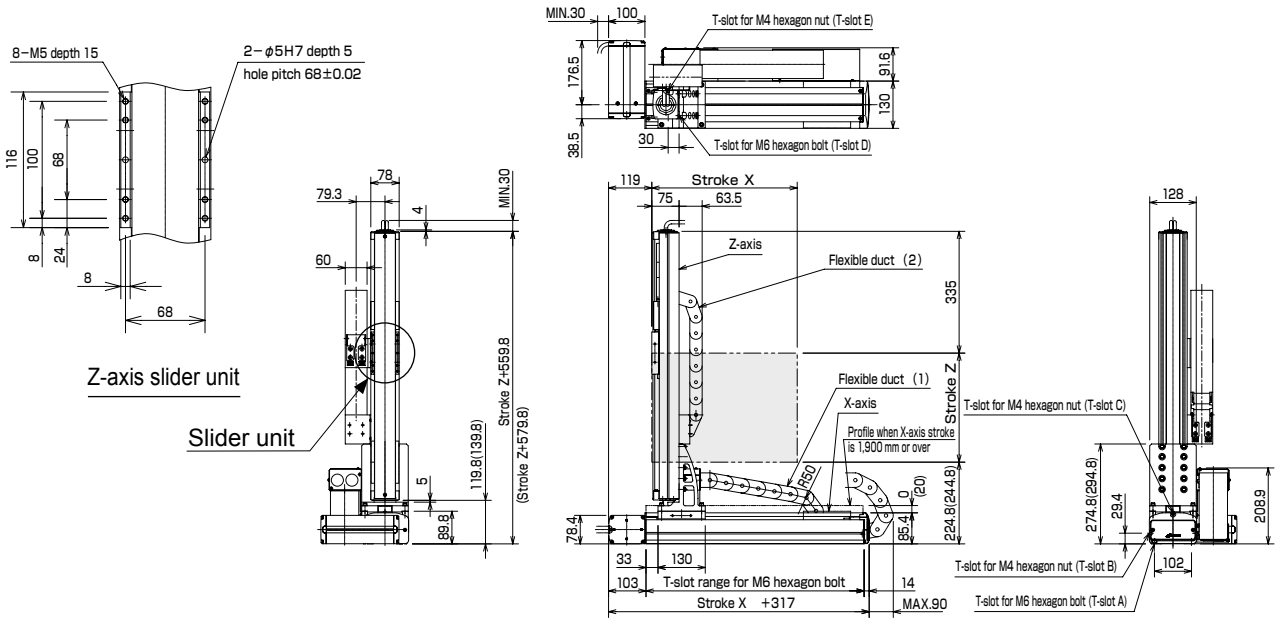

Discontinue

Example of Orthogonal Axes Combination: X-Z Flexible duct spec

[Specifications]

	X-axis	Z-axis
Axis type	KBB-30F-B□-M21N-□0	KBB-10E-ST-M10B-□0
Stroke (in increments of 100 mm)	100 to 2500mm	100 to 900mm
Max. speed	1000mm/s	600mm/s (Note 1)
Positioning repeatability	±0.05mm	±0.01mm
Lead	21mm (lead converted into ball screw)	10mm
Motor output	100W	100W, with brake
Resolution	0.01mm	

Acceleration/deceleration time when the maximum speed is set: 0.36 sec. or over

Timing belt type

X-axis: Timing belt driven
Side mounted motor
Z-axis: Ball screw driven
Motor straight

Note 1: When the stroke is as given below, the maximum speed differs.

	Stroke (mm)	Max. speed (mm/s)
Z-axis	700	500
	800	400
	900	300

Max. load capacity (kg) (Note 2)	Z-axis stroke								
	100mm	200mm	300mm	400mm	500mm	600mm	700mm	800mm	900mm
	12.0	12.0	12.0	12.0	12.0	10.0	4.0	2.0	2.0

Note 2: Load capacity when a regenerative discharge unit (ABSU-2000) is used.

R: Right-handed

The values in ( ) are applicable when the X-axis stroke is 1,900 mm or over.

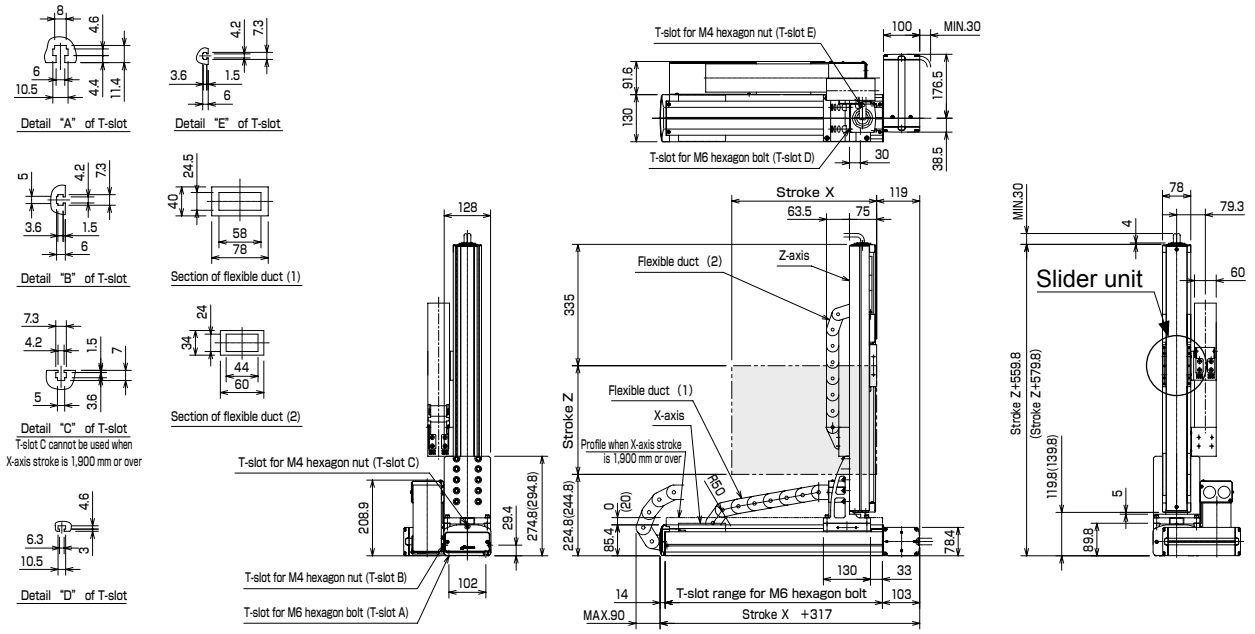

L: Left-handed

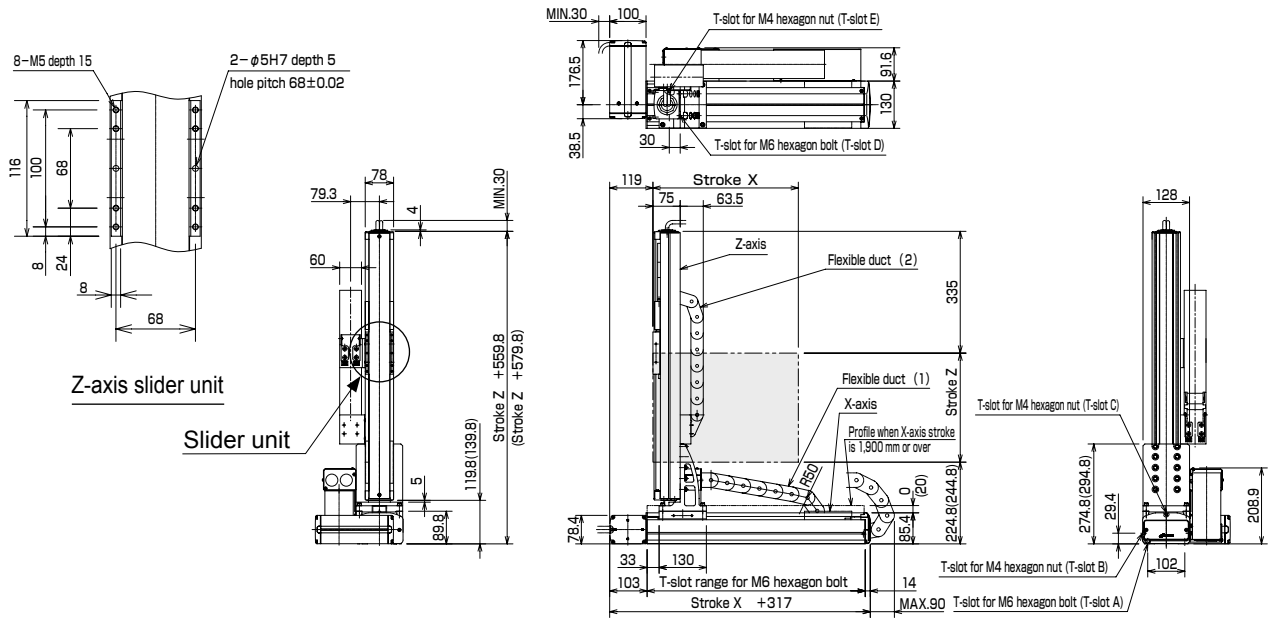

X-Z Flexible duct spec

Example of Orthogonal Axes Combination: X-Z Flexible duct spec

[Specifications]

	X-axis	Z-axis
Axis type	KBB-50F-B□-M21N-□0	KBB-30E-ST-M10B-□0
Stroke (in increments of 100 mm)	200 to 2500mm	100 to 1000mm
Max. speed	1000mm/s	600mm/s (Note 1)
Positioning repeatability	±0.05mm	±0.01mm
Lead	21mm (lead converted into ball screw)	10mm
Motor output	200W	100W, with brake
Resolution	0.01mm	

Acceleration/deceleration time when the maximum speed is set: 0.36 sec. or over

Timing belt type

X-axis: Timing belt driven
Side mounted motor
Z-axis: Ball screw driven
Motor straight

Note 1: When the stroke is as given below, the maximum speed differs.

	Stroke (mm)	Max. speed (mm/s)
Z-axis	700	500
	800	400
	900 to 1000	300

Max. load capacity (kg) (Note 2)	Z-axis stroke									
	100mm	200mm	300mm	400mm	500mm	600mm	700mm	800mm	900mm	1000mm
	12.0	12.0	12.0	12.0	12.0	12.0	12.0	12.0	12.0	8.0

Note 2: Load capacity when a regenerative discharge unit (ABSU-2000) is used.

R: Right-handed

The values in ( ) are applicable when the X-axis stroke is 1,900 mm or over.

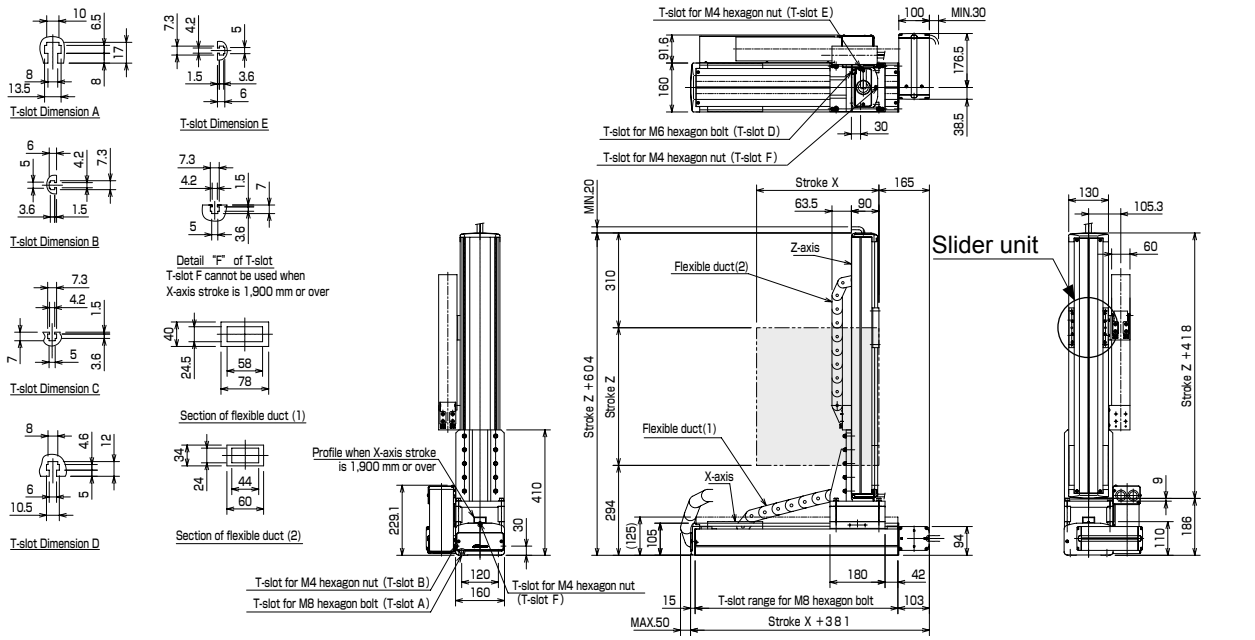

L: Left-handed

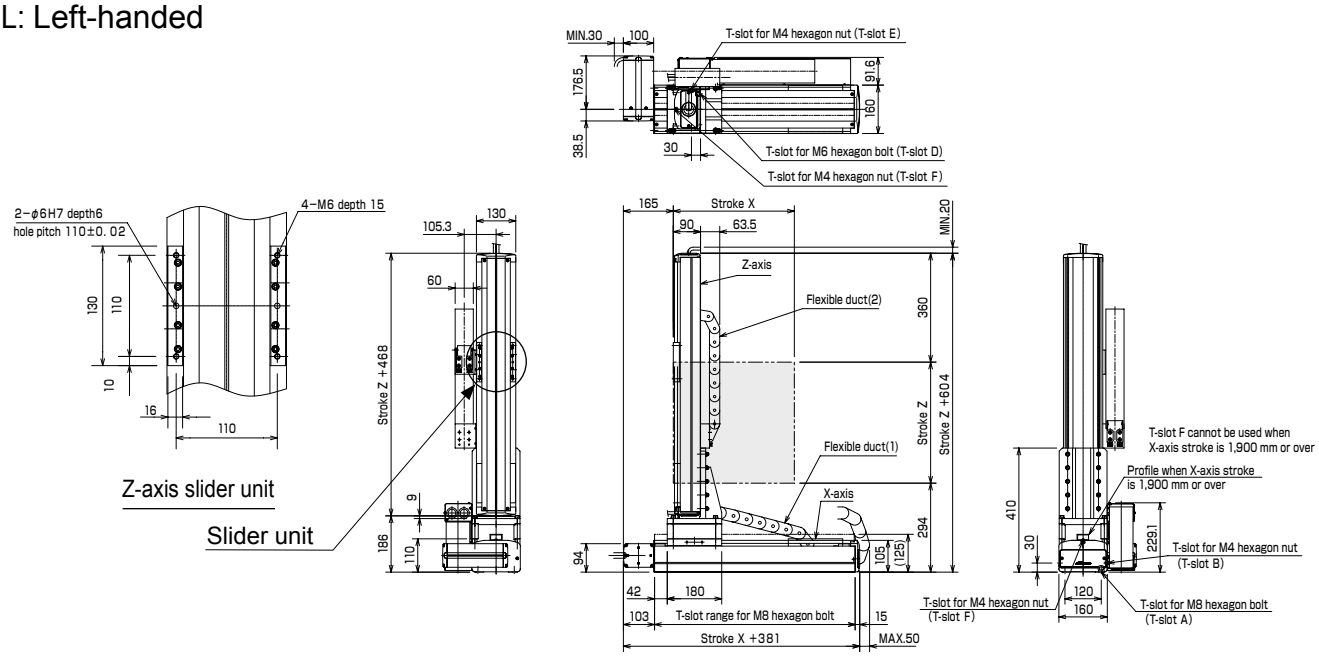

Discontinue

Example of Orthogonal Axes Combination: X-Z Flexible duct spec

[Specifications]

	X-axis	Z-axis
Axis type	KBB-50F-B□-M21N-□0	KBB-30F-ST-M10B-□0
Stroke (in increments of 100 mm)	200 to 2500mm	100 to 1000mm
Max. speed	1000mm/s	600mm/s (Note 1)
Positioning repeatability	±0.05mm	±0.01mm
Lead	21mm (lead converted into ball screw)	10mm
Motor output	200W	200W, with brake
Resolution	0.01mm	

Acceleration/deceleration time when the maximum speed is set: 0.36 sec. or over

Timing belt type

X-axis: Timing belt driven
Side mounted motor
Z-axis: Ball screw driven
Motor straight

Note 1: When the stroke is as given below, the maximum speed differs.

	Stroke (mm)	Max. speed (mm/s)
Z-axis	700	500
	800	400
	900 to 1000	300

Max. load capacity (kg) (Note 2)	Z-axis stroke									
	100mm	200mm	300mm	400mm	500mm	600mm	700mm	800mm	900mm	1000mm
	20.0	20.0	20.0	19.0	18.0	17.0	16.0	13.0	9.0	7.0

Note 2: Load capacity when a regenerative discharge unit (ABSU-2000) is used.

R: Right-handed

The values in ( ) are applicable when the X-axis stroke is 1,900 mm or over.

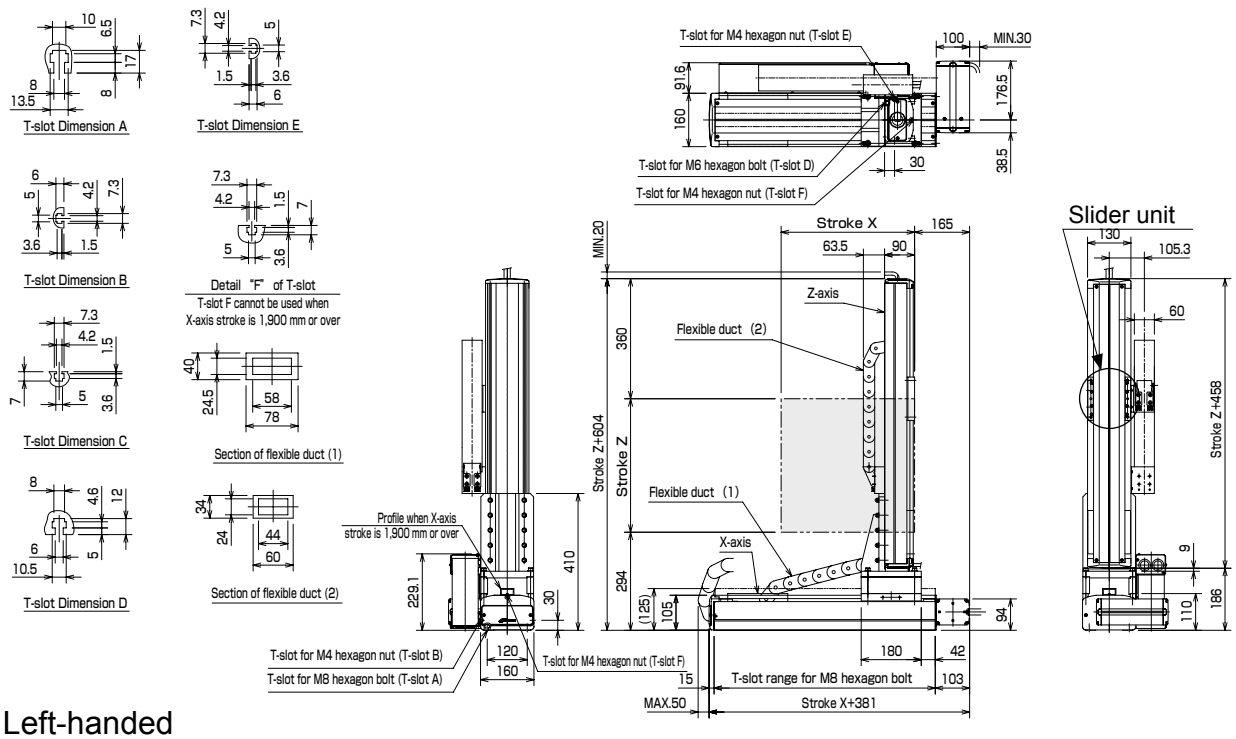

L: Left-handed

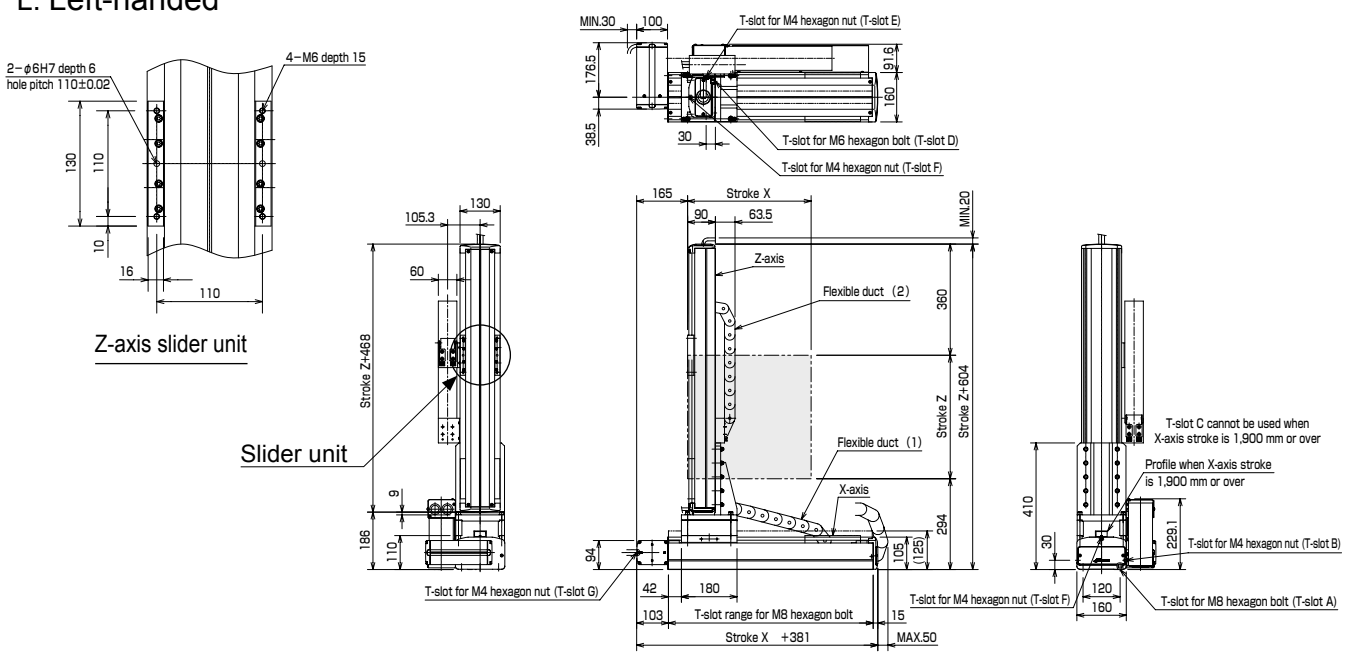

Example of Orthogonal Axes Combination: Y-Z Flexible duct spec

[Specifications]

	Y-axis	Z-axis
Axis type	KBB-07D-ST-M12N-□□	KBB-05D-ST-M12B-□□
Stroke (in increments of 50 mm)	50 to 600mm	50 to 500mm
Max. speed	800mm/s (Note 1)	800mm/s (Note 1)
Positioning repeatability	±0.02mm	
Lead	12mm	12mm
Motor output	50W	50W, with brake
Resolution	0.01mm	

Acceleration/deceleration time when the maximum speed is set: 0.3 sec. or over

Ball screw type

Y-axis: Ball screw driven
Motor straight
Z-axis: Ball screw driven
Motor straight

Note 1: When the stroke is as given below, the maximum speed differs.

	Stroke (mm)	Max. speed (mm/s)
Y-axis	450 to 500	600
	550 to 600	400
Z-axis	450 to 500	600

Max. load capacity (kg)	Z-axis stroke									
	50mm	100mm	150mm	200mm	250mm	300mm	350mm	400mm	450mm	500mm
	3.0	3.0	3.0	3.0	3.0	3.0	2.0	2.0	1.0	1.0

R: Right-handed

Stroke Y	50	100	150	200	250	300	350	400	450	500	550	600
No. of holes A	4	4	6	6	8	8	10	10	12	12	14	14
Hole-to-hole pitch B	1	1	2	2	3	3	4	4	5	5	6	6

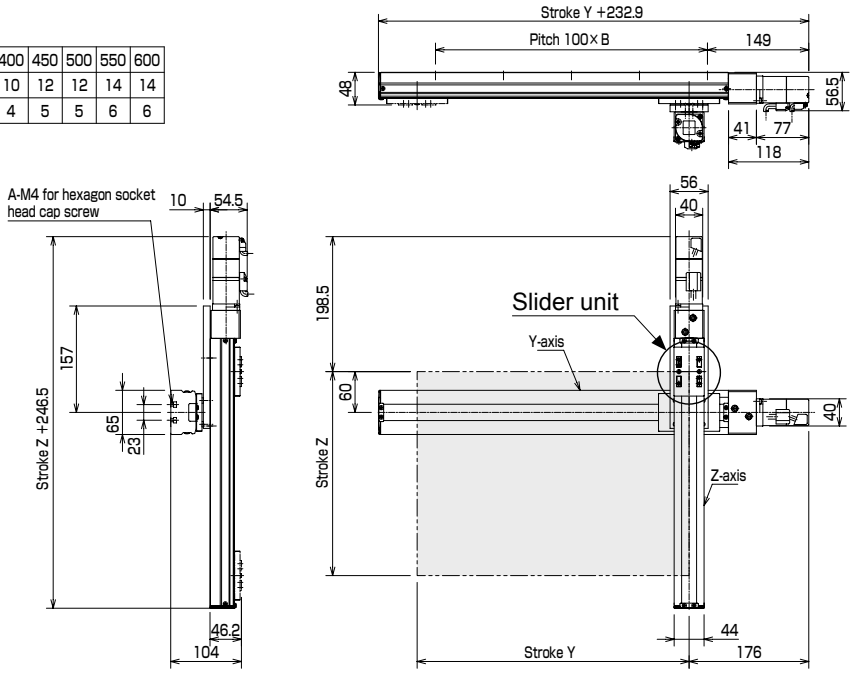

L: Left-handed

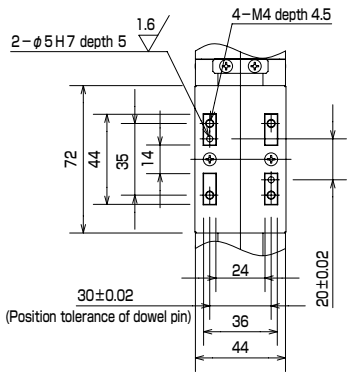

Z-axis slider unit

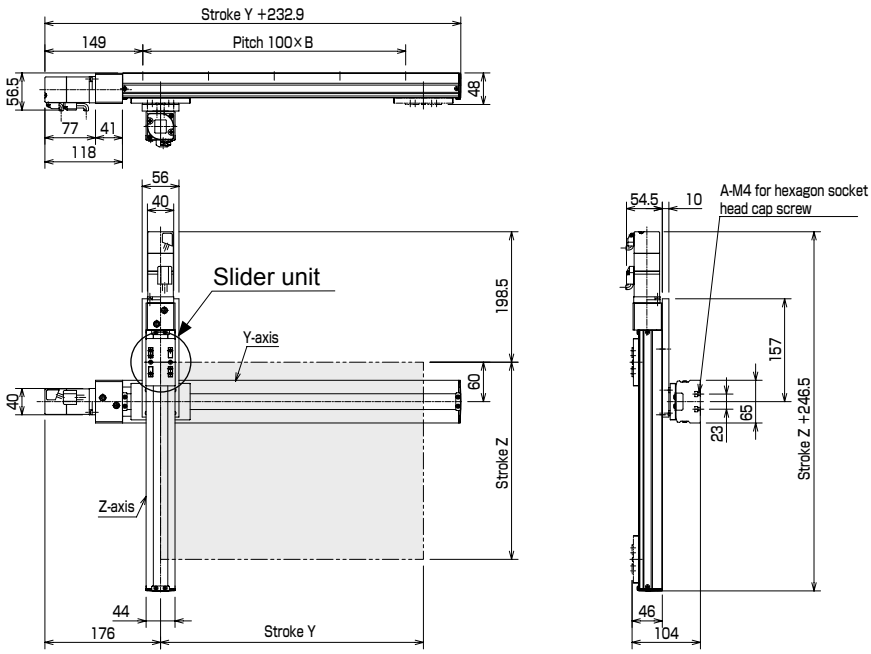

Discontinue

Example of Orthogonal Axes Combination: Y-Z Flexible duct spec

[Specifications]

	Y-axis	Z-axis
Axis type	KBB-10E-ST-S20N-□5	KBB-07D-ST-M12B-□□
Stroke (in increments of 50 mm)	150 to 1050mm	50 to 600mm
Max. speed	1200mm/s (Note 1)	800mm/s (Note 1)
Positioning repeatability	±0.02mm	
Lead	20mm	12mm
Motor output	100W	50W, with brake
Resolution	0.01mm	

Acceleration/deceleration time when the maximum speed is set: 0.36 sec. or over

Ball screw type

Y-axis: Ball screw driven
Motor straight
Z-axis: Ball screw driven
Motor straight

Note 1: When the stroke is as given below, the maximum speed differs.

	Stroke (mm)	Max. speed (mm/s)
Y-axis	750	1000
	850	800
	950 to 1050	600
Z-axis	450 to 500	600
	550 to 600	400

Max. load capacity (kg)	Z-axis stroke											
	50mm	100mm	150mm	200mm	250mm	300mm	350mm	400mm	450mm	500mm	550mm	600mm
	4.0	4.0	4.0	4.0	4.0	4.0	4.0	4.0	4.0	4.0	2.5	2.5

R: Right-handed

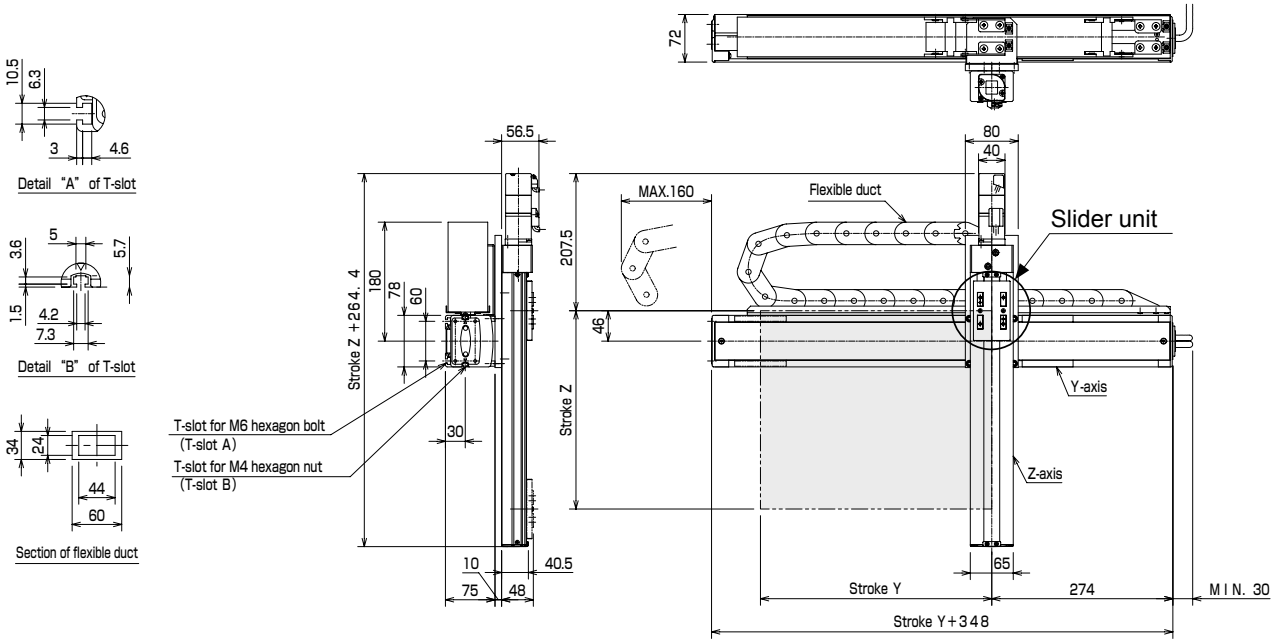

L: Left-handed

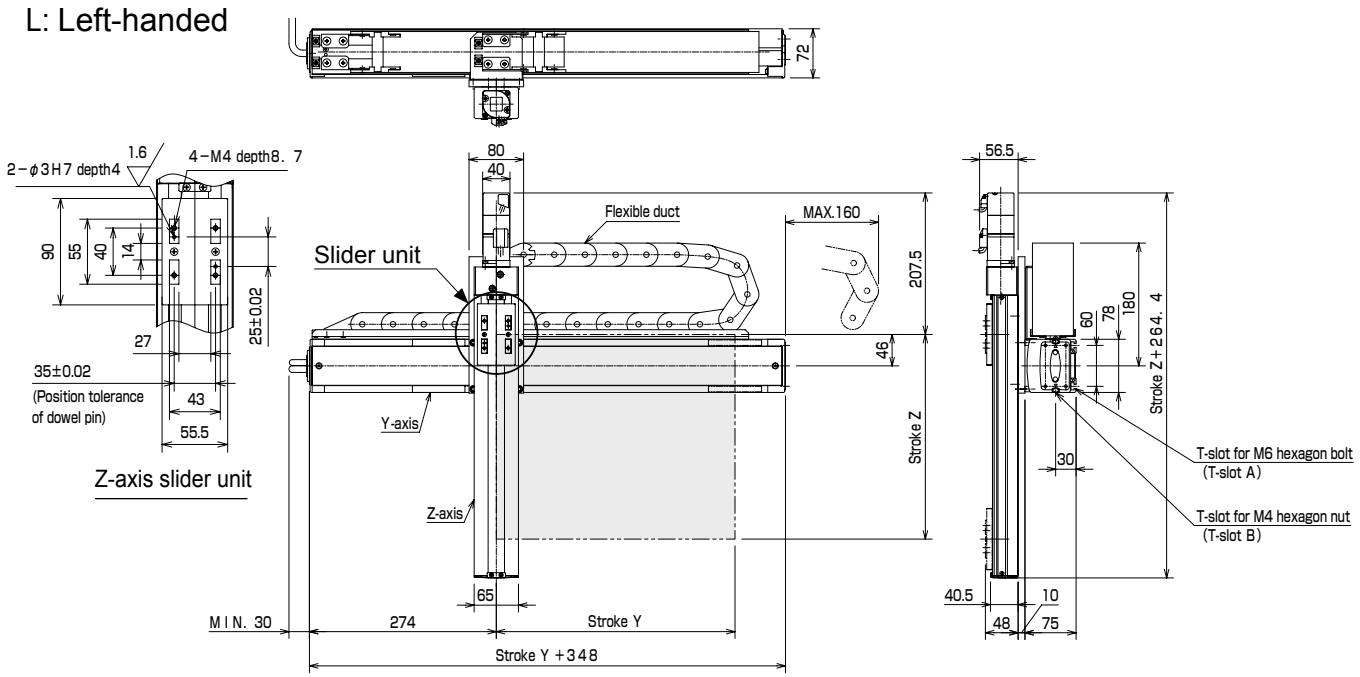

Example of Orthogonal Axes Combination: Y-Z Flexible duct spec

[Specifications]

	Y-axis	Z-axis
Axis type	KBB-10E-ST-M20N-□0	KBB-10E-U□-S10B-□5
Stroke (in increments of 100 mm)	100 to 1000mm	150 to 550mm
Max. speed	1200mm/s (Note 1)	600mm/s
Positioning repeatability	±0.01mm	
Lead	20mm	10mm
Motor output	100W	100W, with brake
Resolution	0.01mm	

Acceleration/deceleration time when the maximum speed is set: 0.36 sec. or over

Ball screw type

Y-axis: Ball screw driven
Motor straight
Z-axis: Ball screw driven
Side mounted motor

Note 1: When the stroke is as given below, the maximum speed differs.

	Stroke (mm)	Max. speed (mm/s)
Y-axis	700	1000
	800	800
	900 to 1000	600

Max. load capacity (kg)	Z-axis stroke				
	150mm	250mm	350mm	450mm	550mm
	8.0	8.0	6.5	5.0	3.0

R: Right-handed

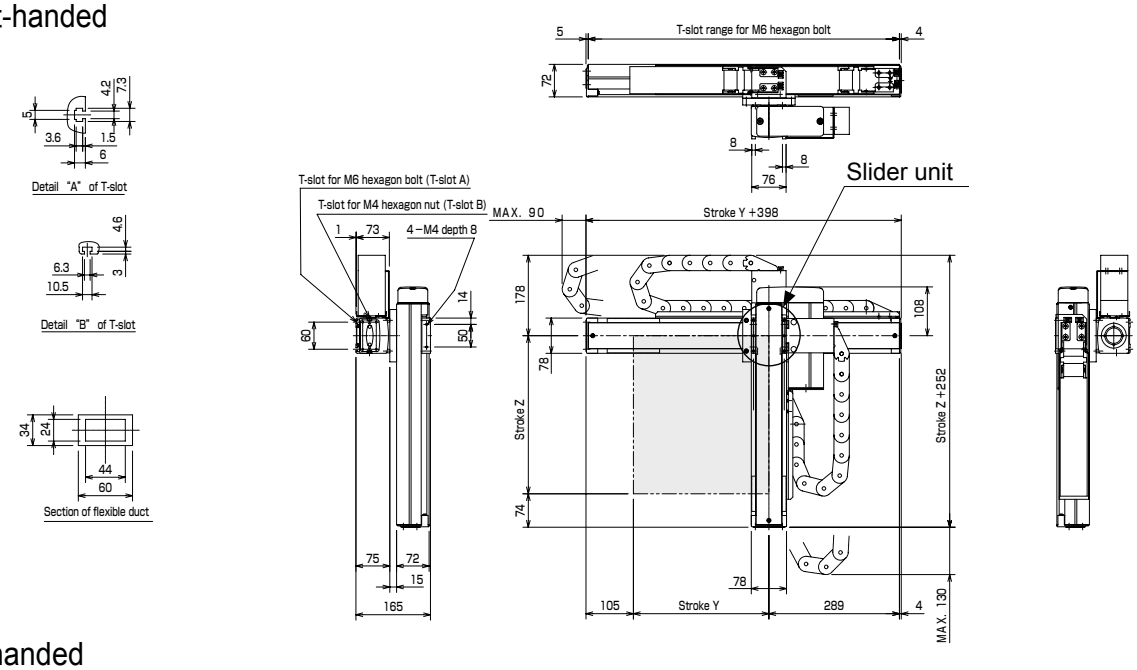

L: Left-handed

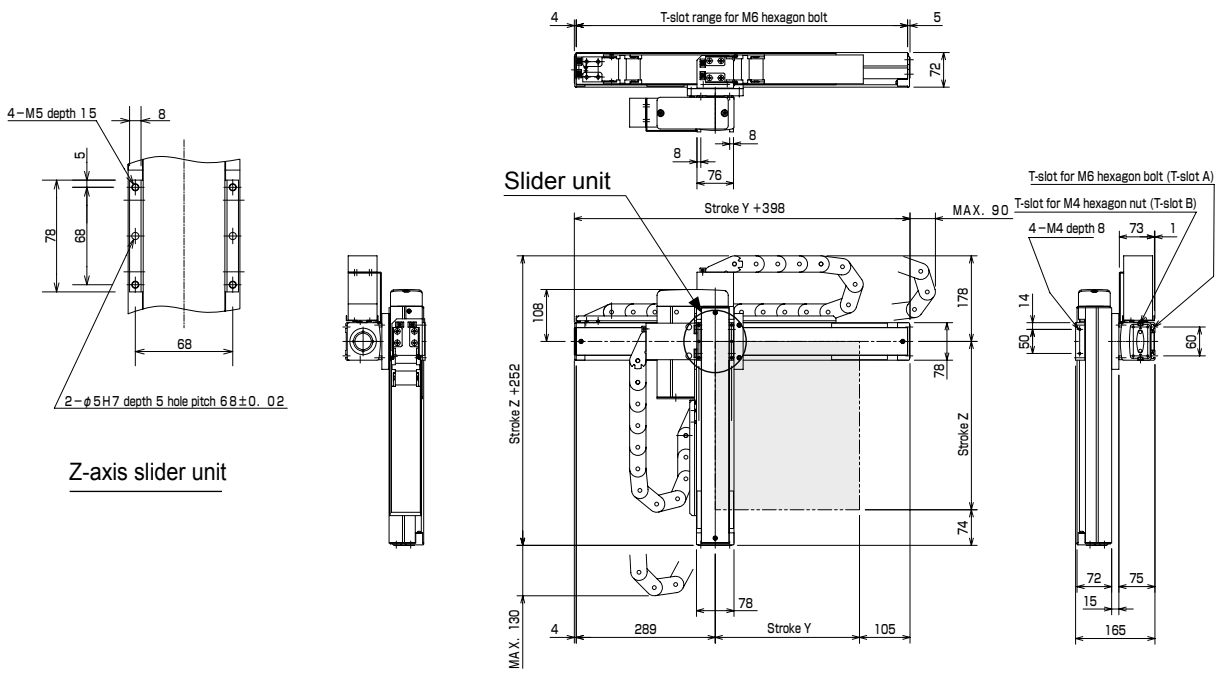

Discontinue

Example of Orthogonal Axes Combination: Y-Z Flexible duct spec

[Specifications]

	Y-axis	Z-axis
Axis type	KBB-10E-ST-M20N-□0	KBB-10E-U□-S10B-□5
Stroke (in increments of 100 mm)	100 to 1000mm	150 to 550mm
Max. speed	1200mm/s (Note 1)	600mm/s
Positioning repeatability	±0.01mm	
Lead	20mm	10mm
Motor output	100W	100W, with brake
Resolution	0.01mm	

Acceleration/deceleration time when the maximum speed is set: 0.36 sec. or over

Ball screw type

Y-axis: Ball screw driven
Motor straight
Z-axis: Ball screw driven
Side mounted motor

Note 1: When the stroke is as given below, the maximum speed differs.

	Stroke (mm)	Max. speed (mm/s)
Y-axis	700	1000
	800	800
	900 to 1000	600

Max. load capacity (kg)	Z-axis stroke				
	150mm	250mm	350mm	450mm	550mm
	8.0	8.0	6.5	5.0	3.0

R: Right-handed

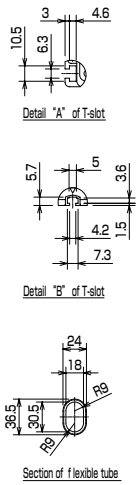

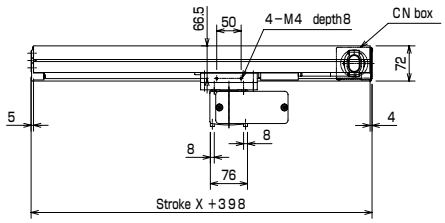

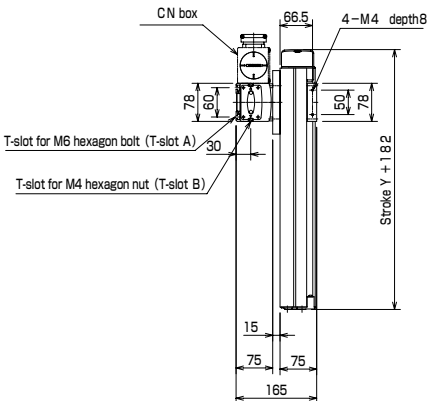

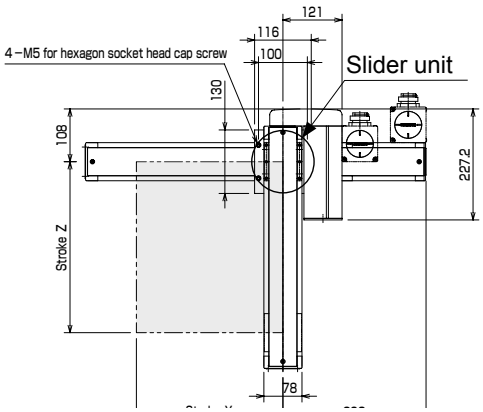

L: Left-handed

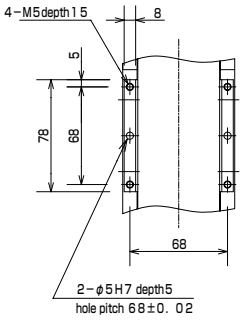

Z-axis slider unit

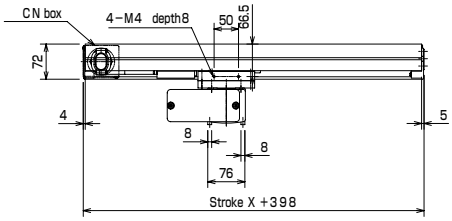

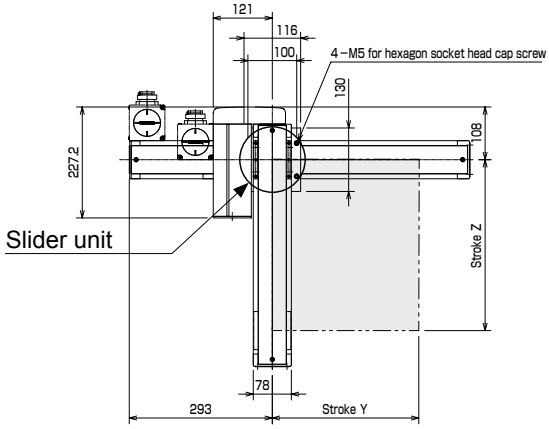

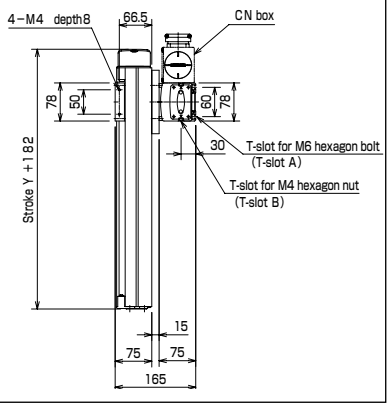

Example of Orthogonal Axes Combination: Y-Z Flexible duct spec

[Specifications]

	Y-axis	Z-axis
Axis type	KBB-30E-ST-M20N-□5	KBB-10E-U□-M10B-□5
Stroke (in increments of 100 mm)	150 to 1050mm	100 to 800mm
Max. speed	1200mm/s (Note 1)	600mm/s (Note 1)
Positioning repeatability	±0.01mm	
Lead	20mm	10mm
Motor output	100W	100W, with brake
Resolution	0.01mm	

Acceleration/deceleration time when the maximum speed is set: 0.48 sec. or over

Ball screw type

Y-axis: Ball screw driven
Motor straight
Z-axis: Ball screw driven
Motor straight

Note 1: When the stroke is as given below, the maximum speed differs.

	Stroke (mm)	Max. speed (mm/s)
Y-axis	750	1000
	850	800
	950 to 1050	600
Z-axis	700	500
	800	400

Max. load capacity (kg) (Note 2)	Z-axis stroke							
	100mm	200mm	300mm	400mm	500mm	600mm	700mm	800mm
	12.0	11.0	9.0	9.0	6.0	5.0	1.0	1.0

Note2: Load capacity when a regenerative discharge unit(ABSU-2000) is used.

R: Right-handed

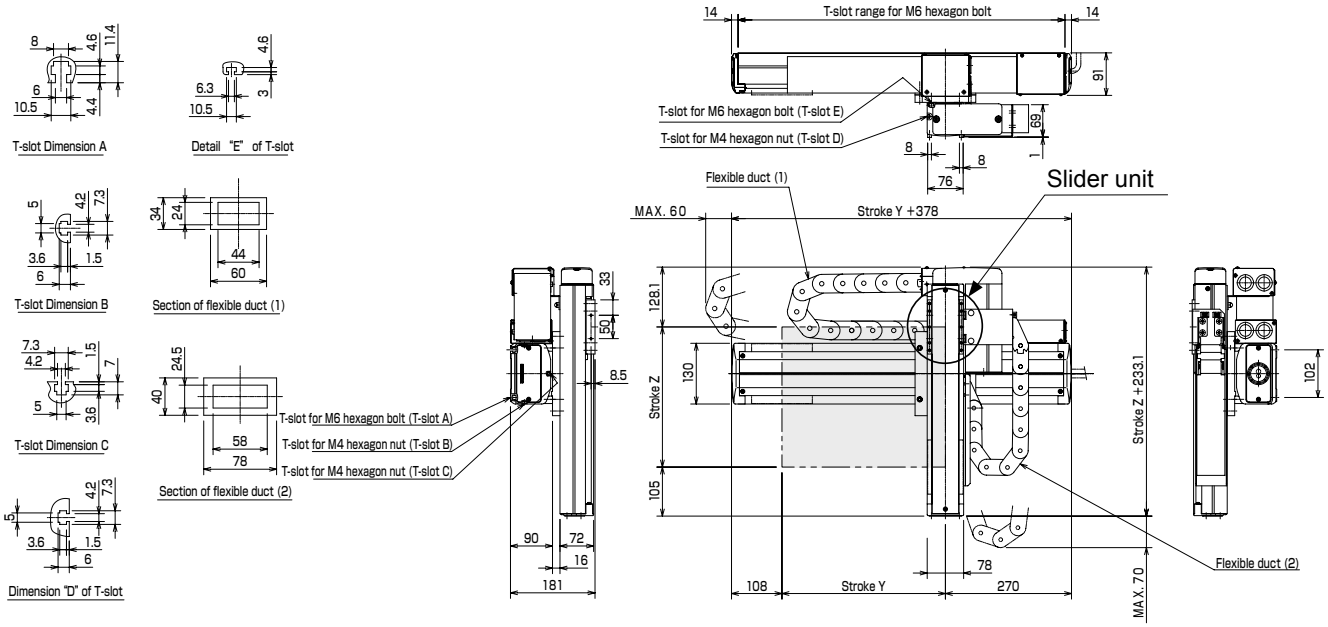

L: Left-handed

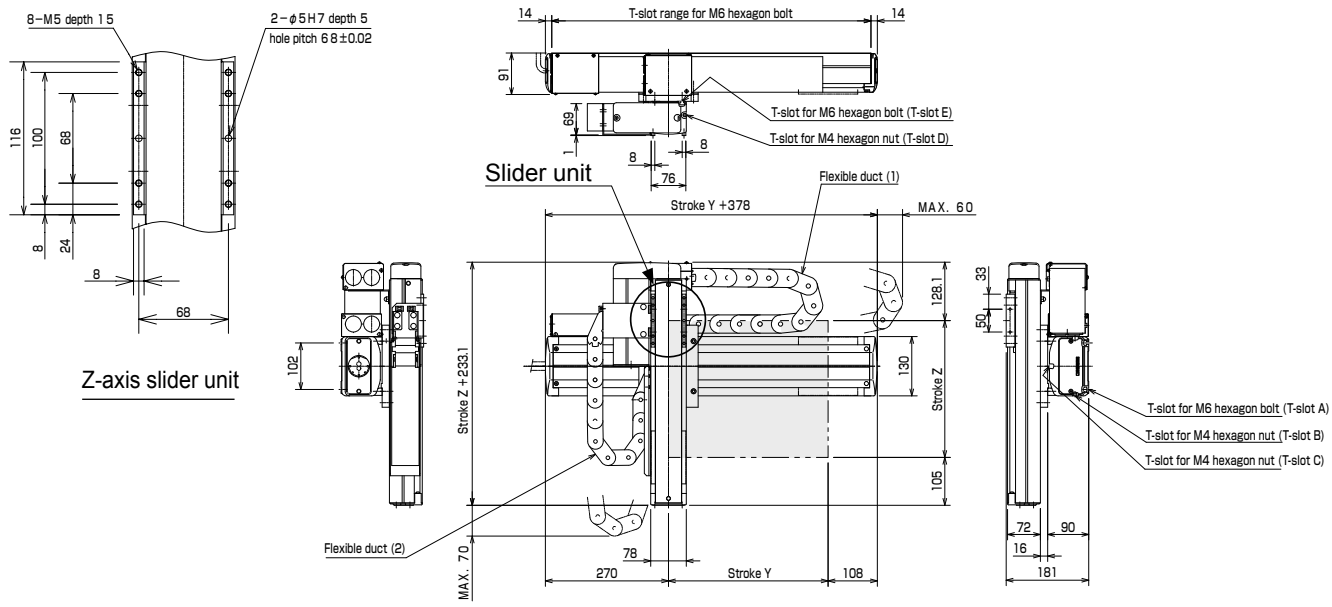

Discontinue

Example of Orthogonal Axes Combination: Y-Z Flexible duct spec

[Specifications]

	Y-axis	Z-axis
Axis type	KBB-30E-ST-M20N-□5	KBB-10E-U□-M10B-□0
Stroke (in increments of 100 mm)	150 to 1050mm	100 to 800mm
Max. speed	1200mm/s (Note 1)	600mm/s (Note 1)
Positioning repeatability	±0.01mm	
Lead	20mm	10mm
Motor output	100W	100W, with brake
Resolution	0.01mm	

Acceleration/deceleration time when the maximum speed is set: 0.48 sec. or over

Ball screw type

Y-axis: Ball screw driven
Motor straight
Z-axis: Ball screw driven
Side mounted motor

Note 1: When the stroke is as given below, the maximum speed differs.

	Stroke (mm)	Max. speed (mm/s)
Y-axis	750	1000
	850	800
	950 to 1050	600
Z-axis	700	500
	800	400

Max. load capacity (kg) (Note 2)	Z-axis stroke							
	100mm	200mm	300mm	400mm	500mm	600mm	700mm	800mm
	12.0	11.0	9.0	9.0	6.0	5.0	1.0	1.0

Note2: Load capacity when a regenerative discharge unit(ABSU-2000) is used.

R: Right-handed

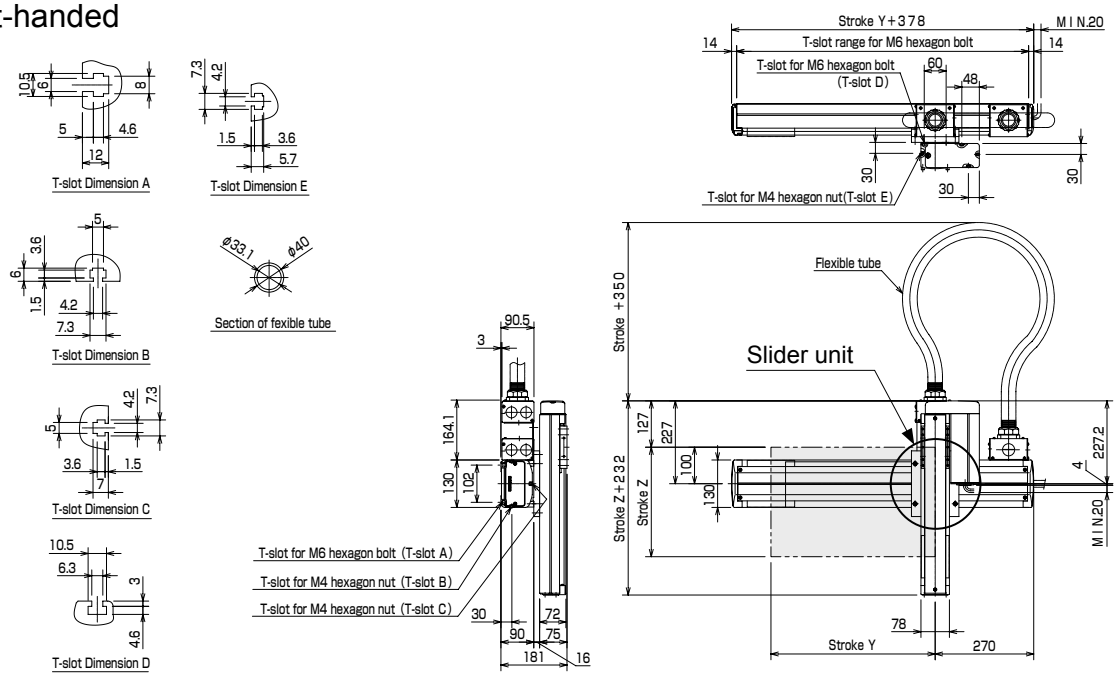

L: Left-handed

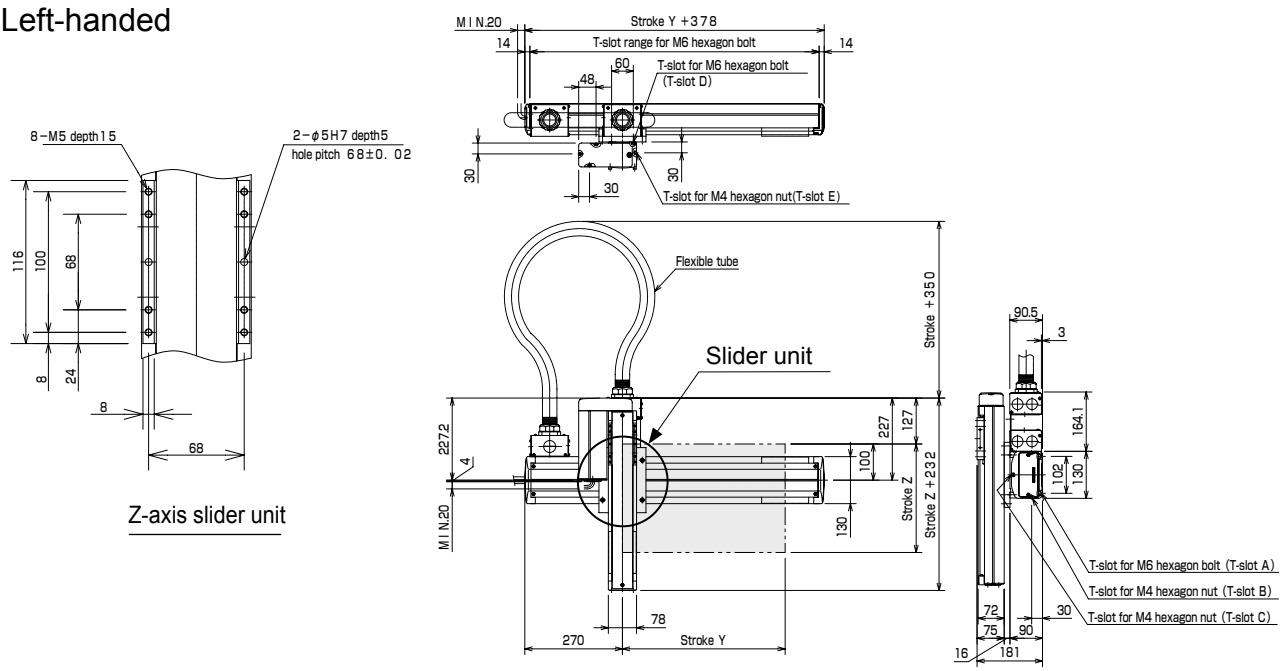

Example of Orthogonal Axes Combination: Y-Z Flexible duct spec

[Specifications]

	Y-axis	Z-axis
Axis type	KBB-30F-ST-M20N-□0	KBB-10E-U□-M10B-□0
Stroke (in increments of 100 mm)	100 to 1000mm	100 to 1000mm
Max. speed	1200mm/s (Note 1)	600mm/s (Note 1)
Positioning repeatability	±0.01mm	
Lead	20mm	10mm
Motor output	200W	100W, with brake
Resolution	0.01mm	

Acceleration/deceleration time when the maximum speed is set: 0.36 sec. or over

Ball screw type

Y-axis: Ball screw driven
Motor straight
Z-axis: Ball screw driven
Side mounted motor

Note 1: When the stroke is as given below, the maximum speed differs.

	Stroke (mm)	Max. speed (mm/s)
Y-axis	700	1000
	800	800
	900 to 1000	600
Z-axis	700	500
	800	400
	900 to 1000	300

Max. load capacity (kg) (Note 2)	Z-axis stroke									
	100mm	200mm	300mm	400mm	500mm	600mm	700mm	800mm	900mm	1000mm
	12.0	12.0	12.0	12.0	12.0	12.0	10.0	5.0	4.0	4.0

Note2: Load capacity when a regenerative discharge unit(ABSU-2000) is used.

R: Right-handed

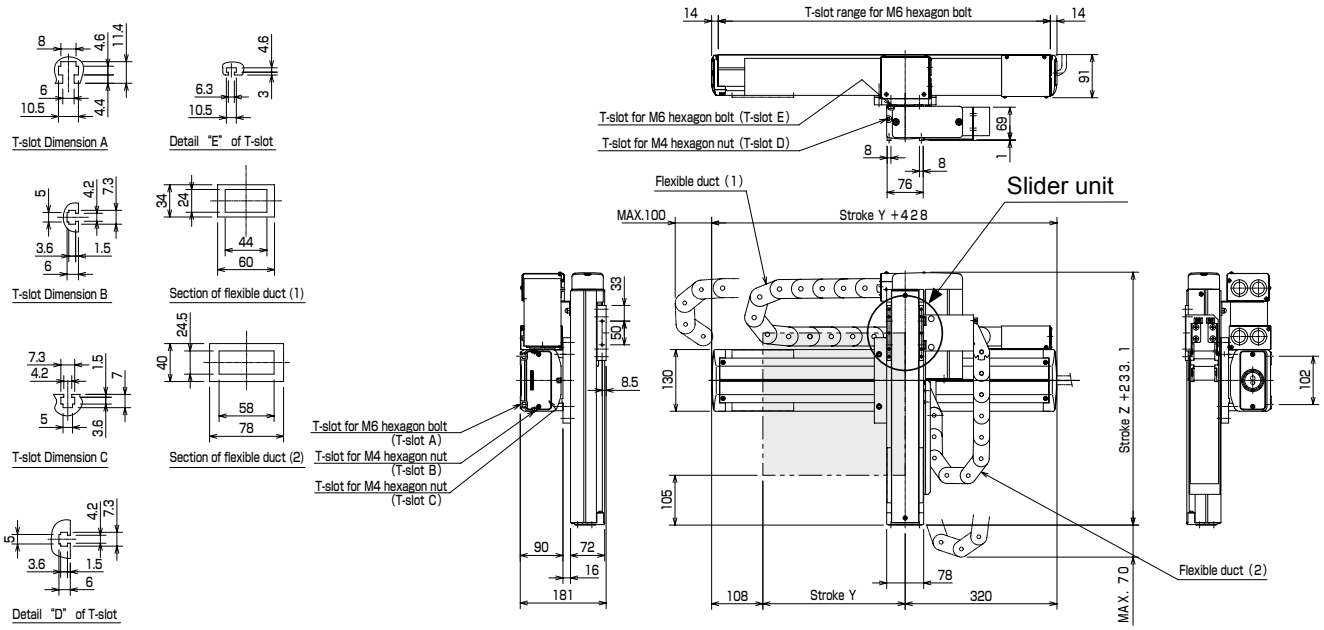

L: Left-handed

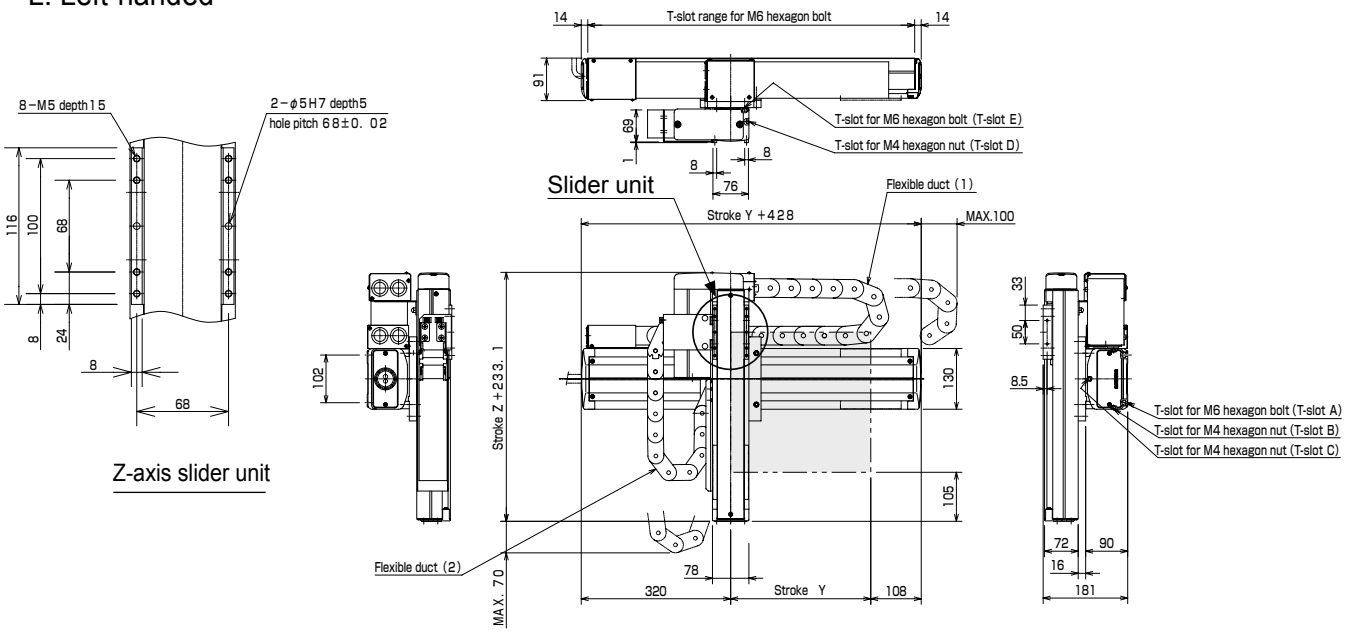

Discontinue

Example of Orthogonal Axes Combination: Y-Z Flexible duct spec

[Specifications]

	Y-axis	Z-axis
Axis type	KBB-30F-ST-M20N-□0	KBB-10E-U□-M10B-□0
Stroke (in increments of 100 mm)	100 to 1000mm	100 to 1000mm
Max. speed	1200mm/s (Note 1)	600mm/s (Note 1)
Positioning repeatability	±0.01mm	
Lead	20mm	10mm
Motor output	200W	100W, with brake
Resolution	0.01mm	

Acceleration/deceleration time when the maximum speed is set: 0.36 sec. or over

Ball screw type

Y-axis: Ball screw driven
Motor straight
Z-axis: Ball screw driven
Side mounted motor

Note 1: When the stroke is as given below, the maximum speed differs.

	Stroke (mm)	Max. speed (mm/s)
Y-axis	700	1000
	800	800
	900 to 1000	600
Z-axis	700	500
	800	400
	900 to 1000	300

Max. load capacity (kg) (Note 2)	Z-axis stroke									
	100mm	200mm	300mm	400mm	500mm	600mm	700mm	800mm	900mm	1000mm
	12.0	12.0	12.0	12.0	12.0	12.0	10.0	5.0	4.0	4.0

Note2: Load capacity when a regenerative discharge unit(ABSU-2000) is used.

R: Right-handed

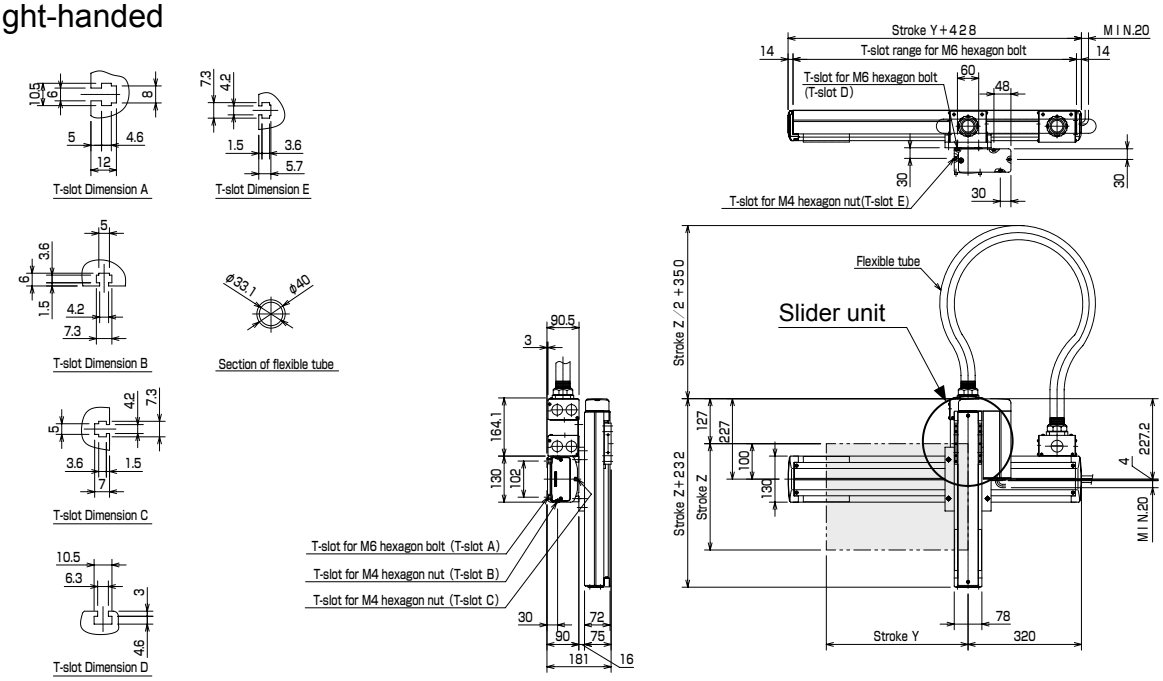

L: Left-handed

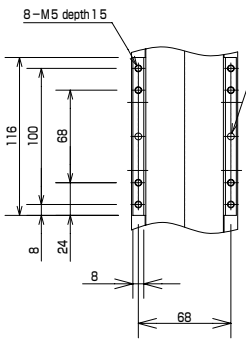

Z-axis slider unit

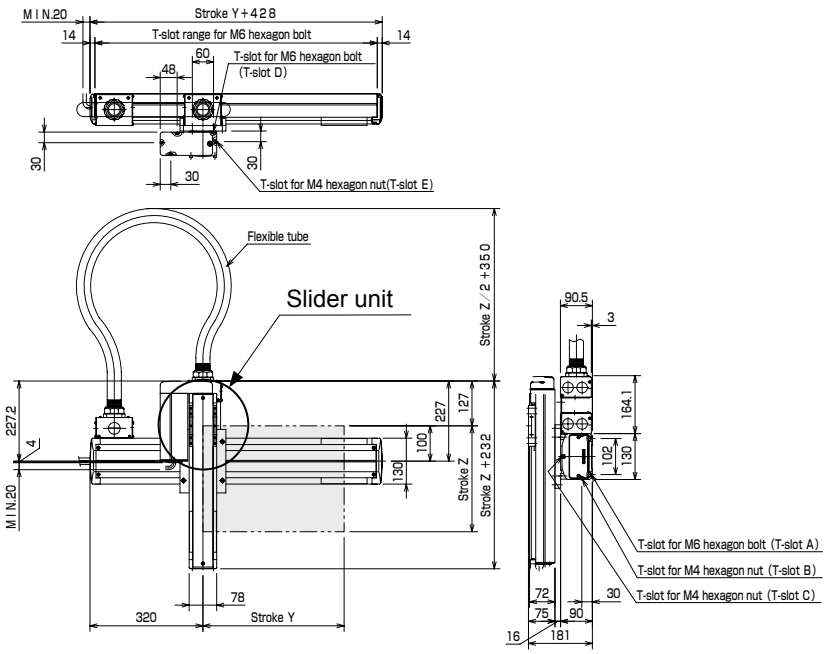

Example of Orthogonal Axes Combination: Y-Z Flexible duct spec

[Specifications]

	Y-axis	Z-axis
Axis type	KBB-50F-ST-M20N-□0	KBB-30E-U□-M10B-□0
Stroke (in increments of 100 mm)	200 to 1500mm	100 to 1000mm
Max. speed	1200mm/s (Note 1)	600mm/s (Note 1)
Positioning repeatability	±0.01mm	
Lead	20mm	10mm
Motor output	100W	100W, with brake
Resolution	0.01mm	

Acceleration/deceleration time when the maximum speed is set: 0.36 sec. or over

Ball screw type

Y-axis: Ball screw driven
Motor straight
Z-axis: Ball screw driven
Side mounted motor

Note 1: When the stroke is as given below, the maximum speed differs.

	Stroke (mm)	Max. speed (mm/s)
Y-axis	700 to 800	1100
	900 to 1000	1000
	1100 to 1200	700
	1300	500
	1400	400
	1500	300
Z-axis	700	500
	800	400
	900 to 1000	300

Max. load capacity (kg) (Note 2)	Z-axis stroke									
	100mm	200mm	300mm	400mm	500mm	600mm	700mm	800mm	900mm	1000mm
	12.0	12.0	12.0	12.0	12.0	12.0	12.0	12.0	12.0	12.0

Note 2: Load capacity when a regenerative discharge unit (ABSU-2000) is used.

R: Right-handed

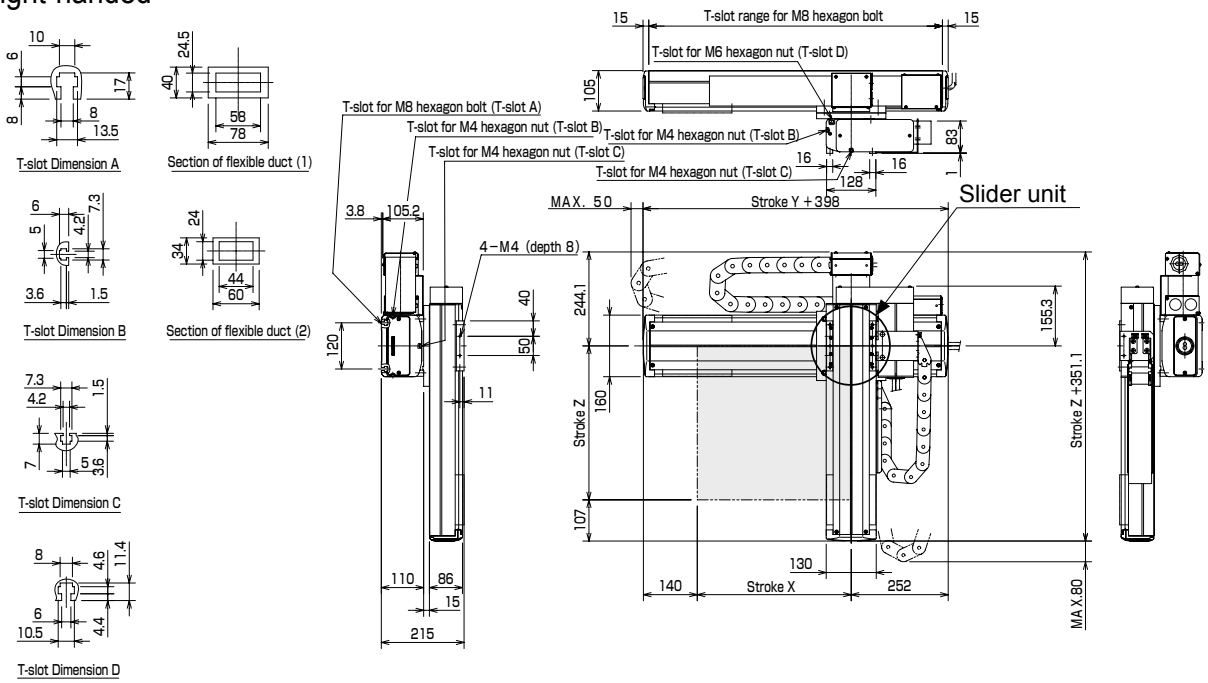

L: Left-handed

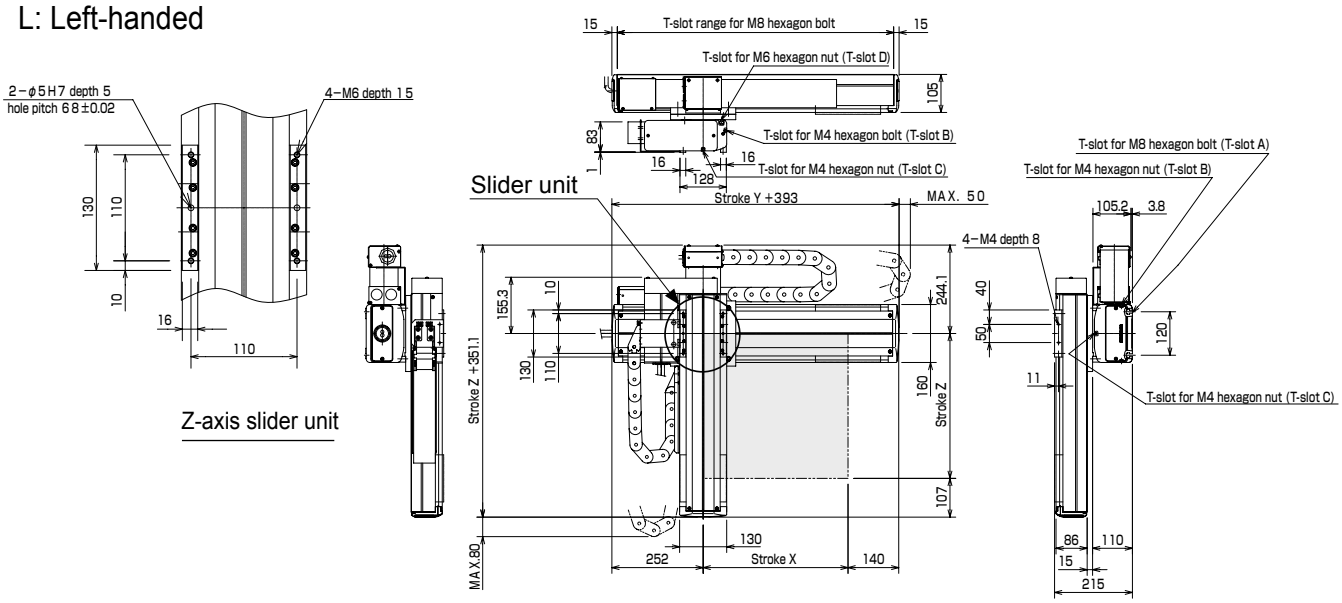

Discontinue

Example of Orthogonal Axes Combination: Y-Z Flexible duct spec

[Specifications]

	Y-axis	Z-axis
Axis type	KBB-50F-ST-M20N-□0	KBB-30E-U□-M10B-□0
Stroke (in increments of 100 mm)	200 to 1500mm	100 to 1000mm
Max. speed	1200mm/s (Note 1)	600mm/s (Note 1)
Positioning repeatability	±0.01mm	
Lead	20mm	10mm
Motor output	200W	100W
Resolution	0.01mm	

Acceleration/deceleration time when the maximum speed is set: 0.36 sec. or over

Ball screw type

Y-axis: Ball screw driven
Motor straight
Z-axis: Ball screw driven
Side mounted motor

Note 1: When the stroke is as given below, the maximum speed differs.

	Stroke (mm)	Max. speed (mm/s)
Y-axis	700 to 800	1100
	900 to 1000	1000
	1100 to 1200	700
	1300	500
	1400	400
	1500	300
Z-axis	700	500
	800	400
	900 to 1000	300

Max. load capacity (kg) (Note 2)	Z-axis stroke									
	100mm	200mm	300mm	400mm	500mm	600mm	700mm	800mm	900mm	1000mm
	12.0	12.0	12.0	12.0	12.0	12.0	12.0	12.0	12.0	12.0

Note 2: Load capacity when a regenerative discharge unit (ABSU-2000) is used.

R: Right-handed

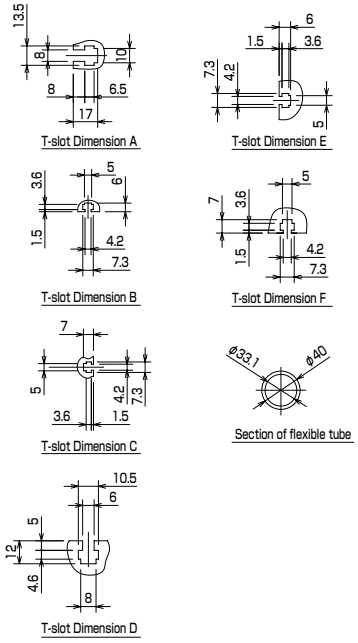

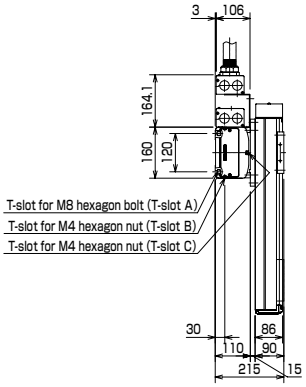

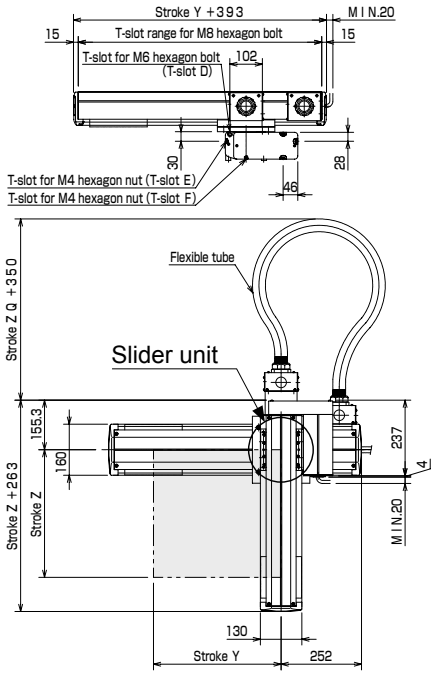

L: Left-handed

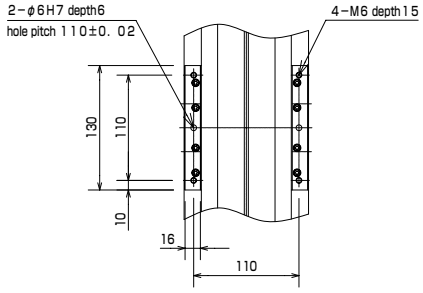

Z-axis slider unit

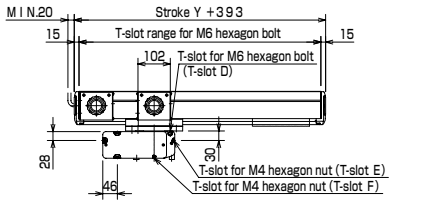

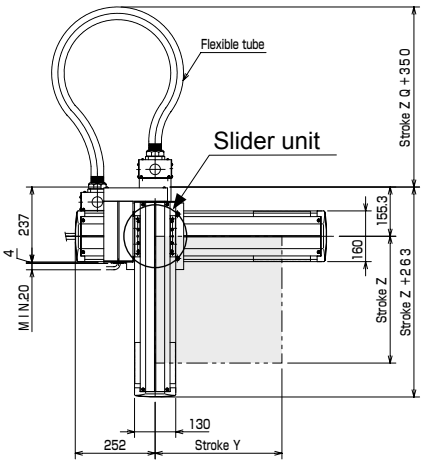

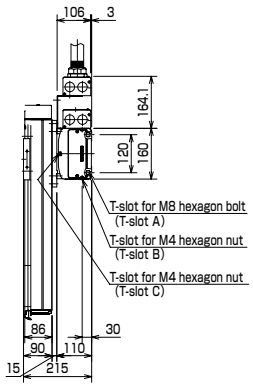

Example of Orthogonal Axes Combination: Y-Z Flexible duct spec

[Specifications]

	Y-axis	Z-axis
Axis type	KBB-50F-ST-M20N-□0	KBB-30F-U□-M10B-□0
Stroke (in increments of 100 mm)	200 to 1500mm	100 to 1000mm
Max. speed	1200mm/s (Note 1)	600mm/s (Note 1)
Positioning repeatability	±0.01mm	
Lead	20mm	10mm
Motor output	200W	200W, with brake
Resolution	0.01mm	

Acceleration/deceleration time when the maximum speed is set: 0.36 sec. or over

Ball screw type

Y-axis: Ball screw driven
Motor straight
Z-axis: Ball screw driven
Side mounted motor

Note 1: When the stroke is as given below, the maximum speed differs.

	Stroke (mm)	Max. speed (mm/s)
Y-axis	700 to 800	1100
	900 to 1000	1000
	1100 to 1200	700
	1300	500
	1400	400
	1500	300
Z-axis	700	500
	800	400
	900 to 1000	300

Max. load capacity (kg) (Note 2)	Z-axis stroke									
	100mm	200mm	300mm	400mm	500mm	600mm	700mm	800mm	900mm	1000mm
	20.0	20.0	20.0	20.0	20.0	20.0	20.0	20.0	20.0	19.0

Note 2: Load capacity when a regenerative discharge unit (ABSU-2000) is used.

R: Right-handed

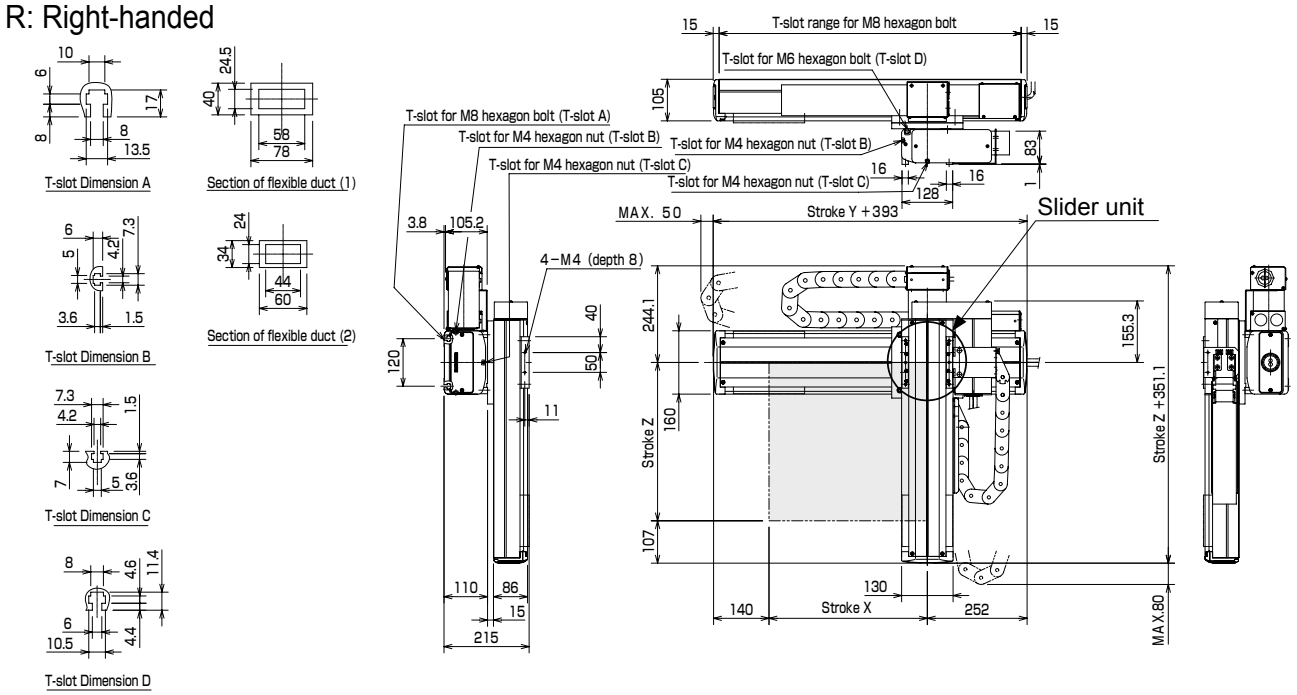

L: Left-handed

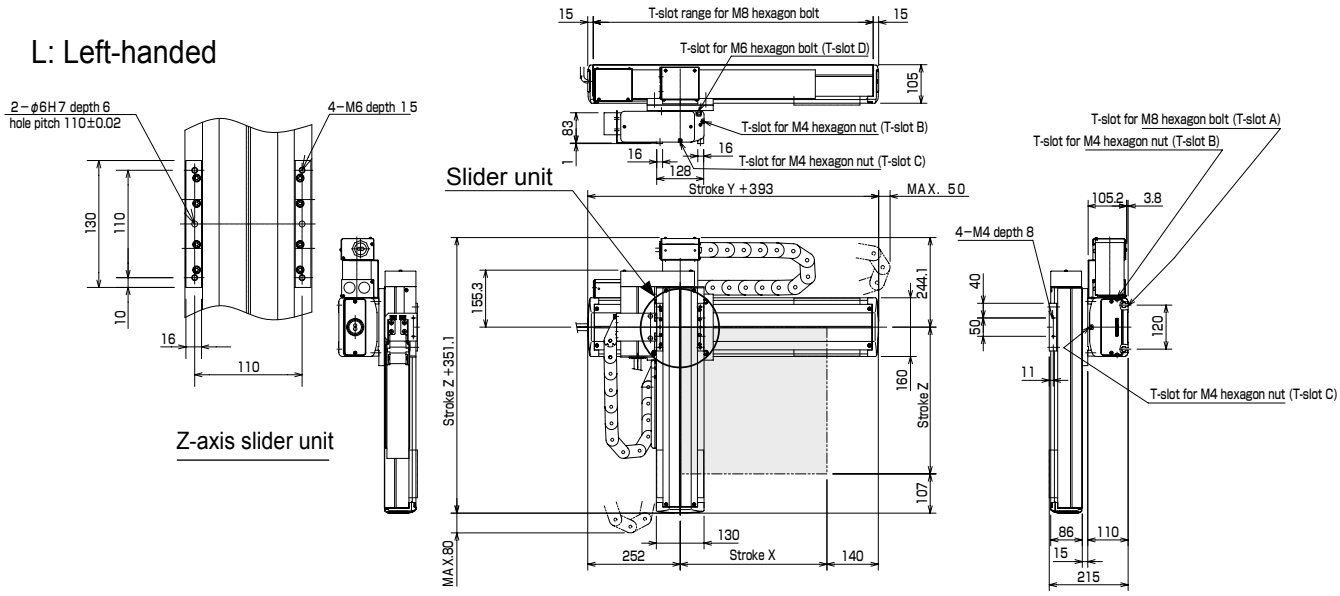

Discontinue

Example of Orthogonal Axes Combination: Y-Z Flexible duct spec

[Specifications]

	Y-axis	Z-axis
Axis type	KBB-50F-ST-M20N-□0	KBB-30F-U□-M10B-□0
Stroke (in increments of 100 mm)	200 to 1500mm	100 to 1000mm
Max. speed	1200mm/s (Note 1)	600mm/s (Note 1)
Positioning repeatability	±0.01mm	
Lead	20mm	10mm
Motor output	200W	200W, with brake
Resolution	0.01mm	

Acceleration/deceleration time when the maximum speed is set: 0.36 sec. or over

Ball screw type

Y-axis: Ball screw driven
Motor straight
Z-axis: Ball screw driven
Side mounted motor

Note 1: When the stroke is as given below, the maximum speed differs.

	Stroke (mm)	Max. speed (mm/s)
Y-axis	700 to 800	1100
	900 to 1000	1000
	1100 to 1200	700
	1300	500
	1400	400
	1500	300
Z-axis	700	500
	800	400
	900 to 1000	300

Max. load capacity (kg) (Note 2)	Z-axis stroke									
	100mm	200mm	300mm	400mm	500mm	600mm	700mm	800mm	900mm	1000mm
	20.0	20.0	20.0	20.0	20.0	20.0	20.0	20.0	20.0	19.0

Note 2: Load capacity when a regenerative discharge unit (ABSU-2000) is used.

R: Right-handed

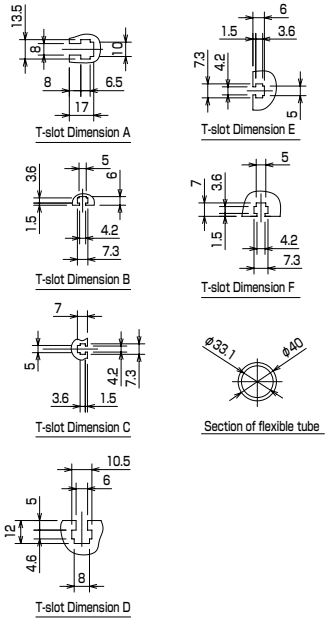

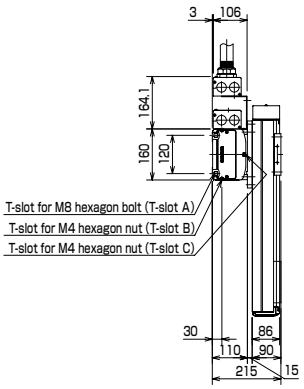

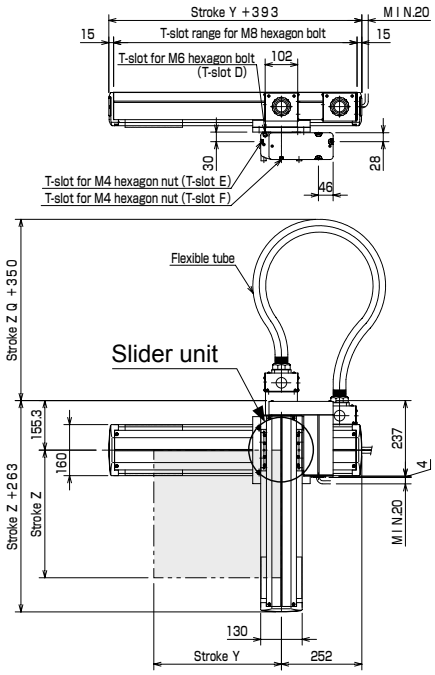

L: Left-handed

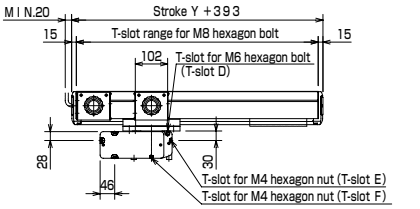

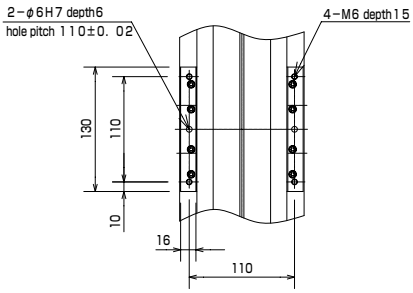

Z-axis slider unit

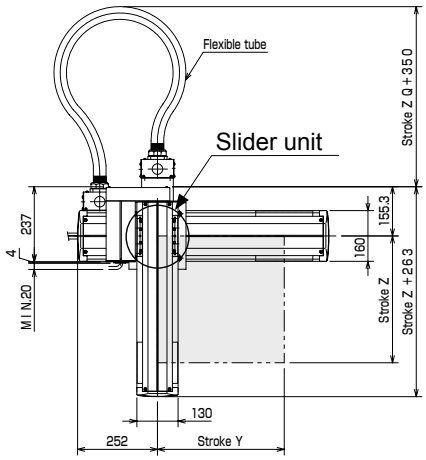

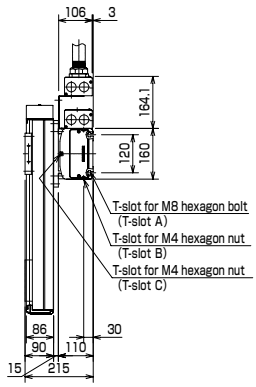

Example of Orthogonal Axes Combination: Y-Z Flexible duct spec

[Specifications]

	Y-axis	Z-axis
Axis type	KBB-10E-B□-S21N-□5	KBB-07D-ST-M12B-□□
Stroke (in increments of 100 mm for Y-axis, 50 mm for Z-axis)	150 to 1850mm	50 to 600mm
Max. speed	1000mm/s	800mm/s (Note 1)
Positioning repeatability	±0.05mm	±0.02mm
Lead	21mm (ball screw lead)	12mm
Motor output	100W	50W, with brake
Resolution	0.01mm	

Acceleration/deceleration time when the maximum speed is set: 0.36 sec. or over

Timing belt type

Y-axis: Timing belt driven
Side mounted motor
Z-axis: Ball screw driven
Motor straight

Note 1: When the stroke is as given below, the maximum speed differs.

	Stroke (mm)	Max. speed (mm/s)
Z-axis	450 to 500	600
	550 to 600	400

Max. load capacity (kg)	Z-axis stroke											
	50mm	100mm	150mm	200mm	250mm	300mm	350mm	400mm	450mm	500mm	550mm	600mm
	4.0	4.0	4.0	4.0	4.0	4.0	4.0	4.0	4.0	4.0	2.5	2.5

R: Right-handed

The values in ( ) are applicable when the Y-axis stroke is 1,150 mm or over.

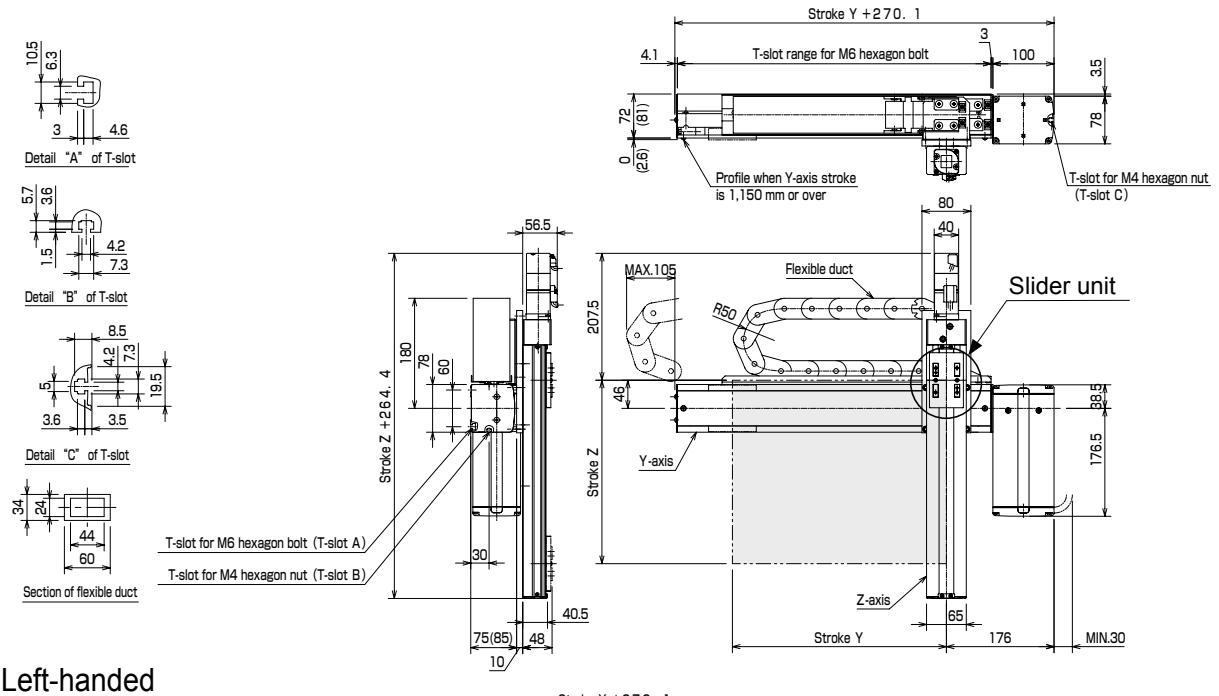

L: Left-handed

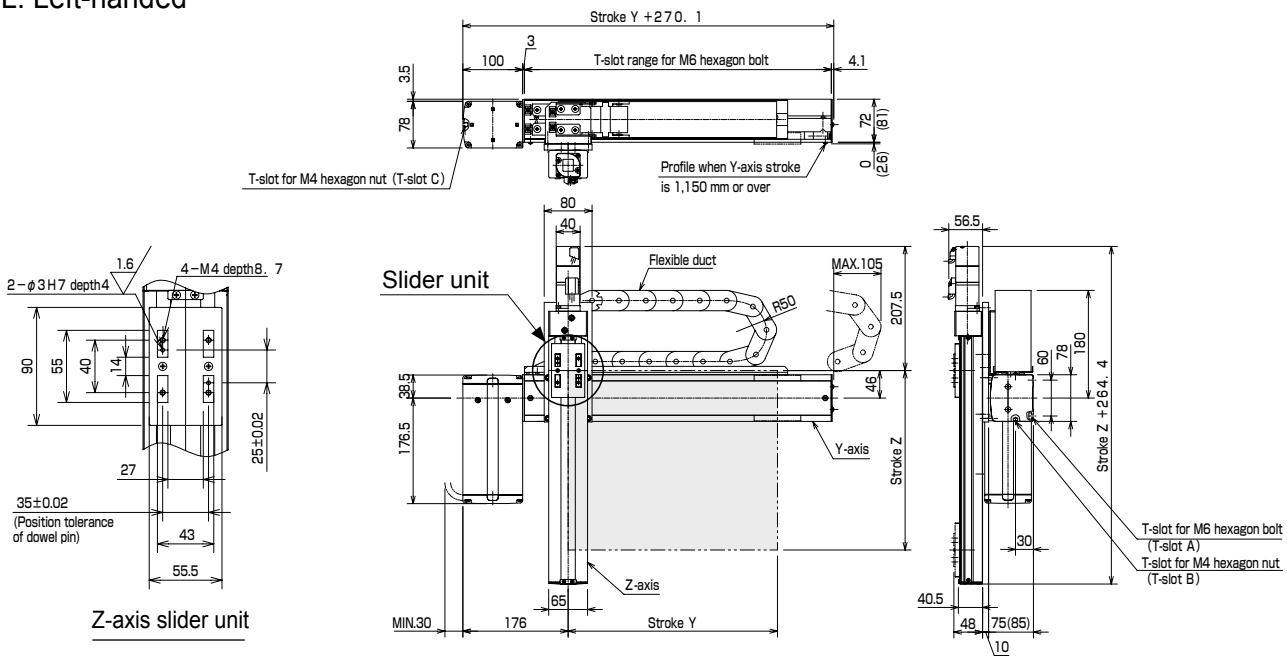

Discontinue

Example of Orthogonal Axes Combination: Y-Z Flexible duct spec

	Y-axis	Z-axis
Axis type	KBB-10E-B□-M21N-□0	KBB-10E-U□-M10B-□5
Stroke (in increments of 100 mm)	100 to 1800mm	150 to 550mm
Max. speed	1000mm/s	600mm/s
Positioning repeatability	±0.05mm	±0.01mm
Lead	21mm (ball screw lead)	10mm
Motor output	100W	100W, with brake
Resolution	0.01mm	

Acceleration/deceleration time when the maximum speed is set: 0.48 sec. or over

Timing belt type

Y-axis: Timing belt driven
Side mounted motor
Z-axis: Ball screw driven
Motor straight

Max. load capacity (kg)	Z-axis stroke				
	150mm	250mm	350mm	450mm	550mm
	8.0	8.0	6.0	5.0	3.0

R: Right-handed

The values in ( ) are applicable when the Y-axis stroke is 1,100 mm or over.

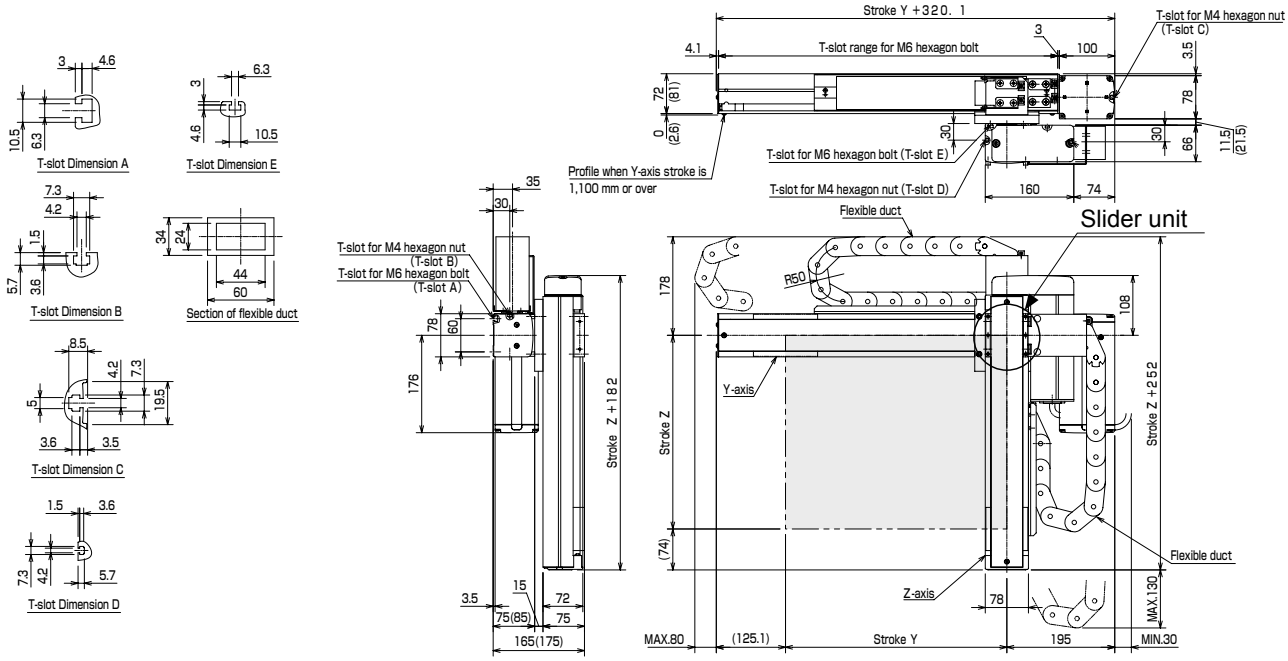

L: Left-handed

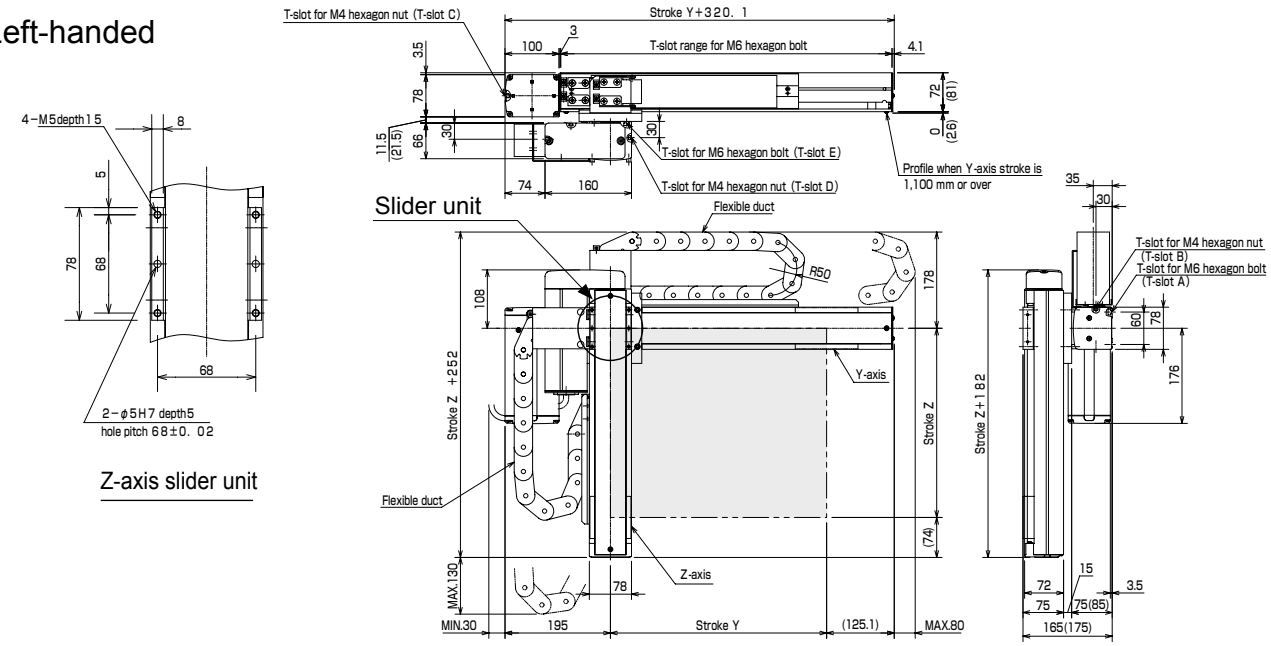

Example of Orthogonal Axes Combination: Y-Z Flexible duct spec

[Specifications]

	Y-axis	Z-axis
Axis type	KBB-30E-B□-M21N-□0	KBB-10E-U□-M10B-□0
Stroke (in increments of 100 mm)	100 to 2500mm	100 to 800mm
Max. speed	1000mm/s	600mm/s (Note 1)
Positioning repeatability	±0.05mm	±0.01mm
Lead	21mm (ball screw lead)	10mm
Motor output	100W	100W, with brake
Resolution	0.01mm	

Acceleration/deceleration time when the maximum speed is set: 0.48 sec. or over

Timing belt type

Y-axis: Ball screw driven
Side mounted motor
Z-axis: Ball screw driven
Motor straight

Note 1: When the stroke is as given below, the maximum speed differs.

	Stroke (mm)	Max. speed (mm/s)
Z-axis	700	500
	800	400

Max. load capacity (kg)	Z-axis stroke							
	100mm	200mm	300mm	400mm	500mm	600mm	700mm	800mm
	6.0	6.0	5.0	4.0	4.0	3.0	1.0	1.0

R: Right-handed

The values in ( ) are applicable when the Y-axis stroke is 1,900 mm or over.

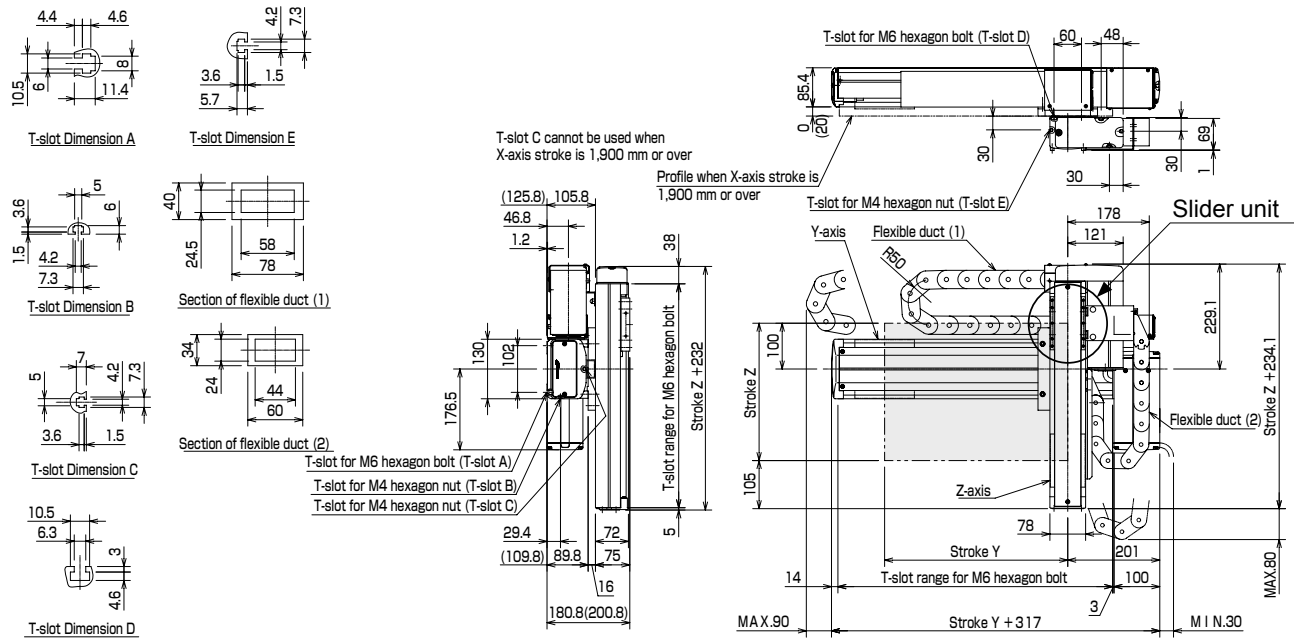

L: Left-handed

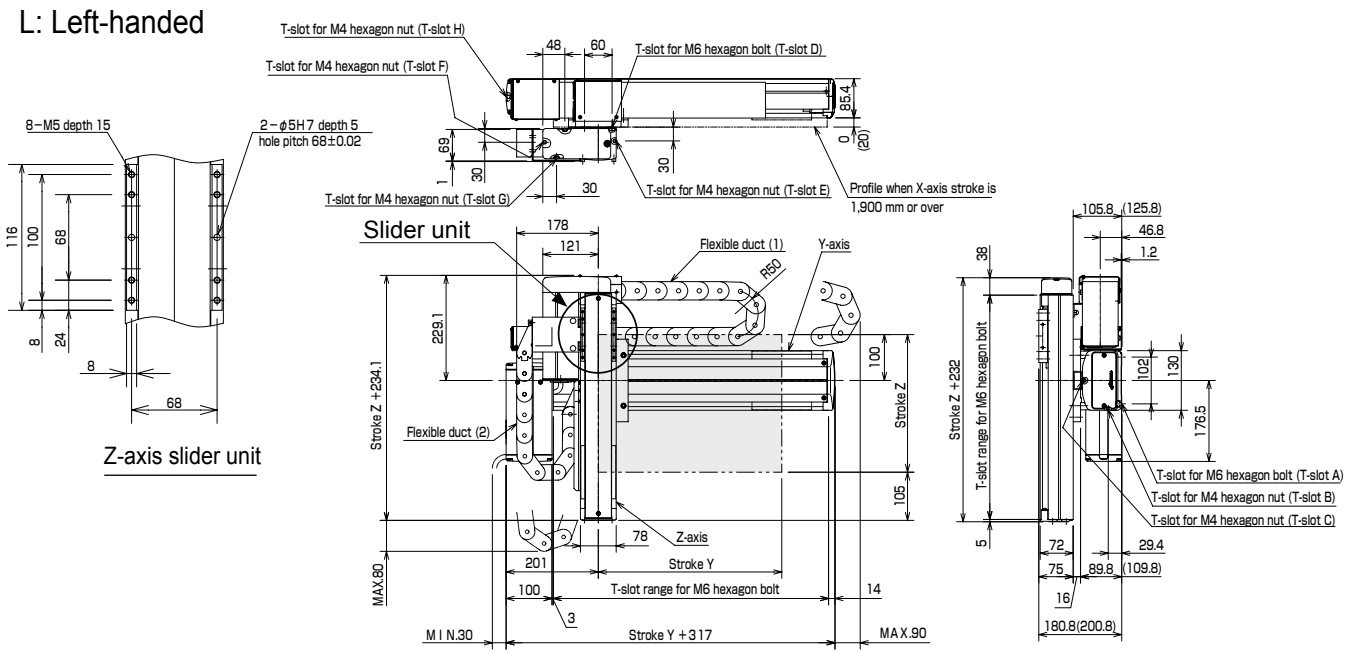

Discontinue

Example of Orthogonal Axes Combination: Y-Z Flexible duct spec

[Specifications]

	Y-axis	Z-axis
Axis type	KBB-30F-B□-M21N-□0	KBB-10E-U□-M10B-□0
Stroke (in increments of 100 mm)	100 to 2500mm	100 to 1000mm
Max. speed	1000mm/s	600mm/s (Note 1)
Positioning repeatability	±0.05mm	±0.01mm
Lead	21mm (ball screw lead)	10mm
Motor output	200W	100W, with brake
Resolution	0.01mm	

Acceleration/deceleration time when the maximum speed is set: 0.36 sec. or over

Timing belt type

Y-axis: Timing belt driven
Side mounted motor
Z-axis: Ball screw driven
Side mounted motor

Note 1: When the stroke is as given below, the maximum speed differs.

	Stroke (mm)	Max. speed (mm/s)
Z-axis	700	500
	800	400
	900 to 1000	300

Max. load capacity (kg) (Note 2)	Z-axis stroke									
	100mm	200mm	300mm	400mm	500mm	600mm	700mm	800mm	900mm	1000mm
	12.0	12.0	12.0	12.0	12.0	12.0	10.0	5.0	4.0	4.0

Note2: Load capacity when a regenerative discharge unit(ABSU-2000) is used.

R: Right-handed

The values in ( ) are applicable when the Y-axis stroke is 1,900 mm or over.

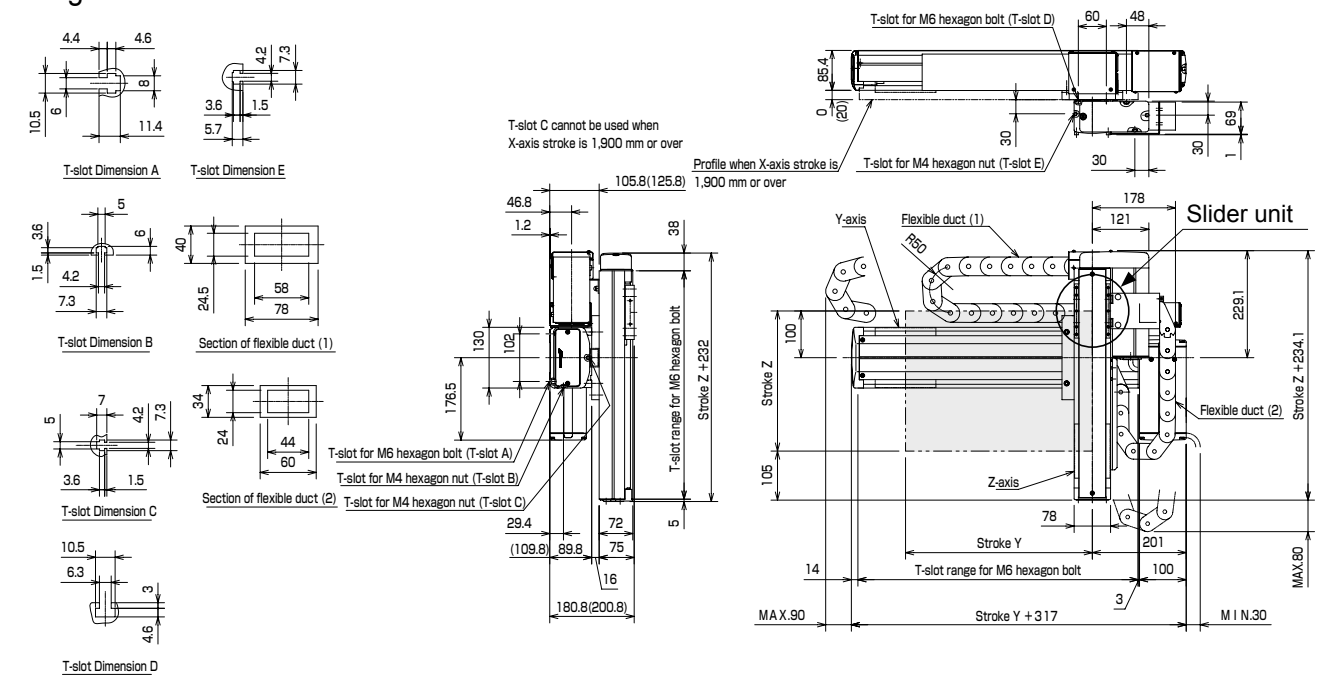

L: Left-handed

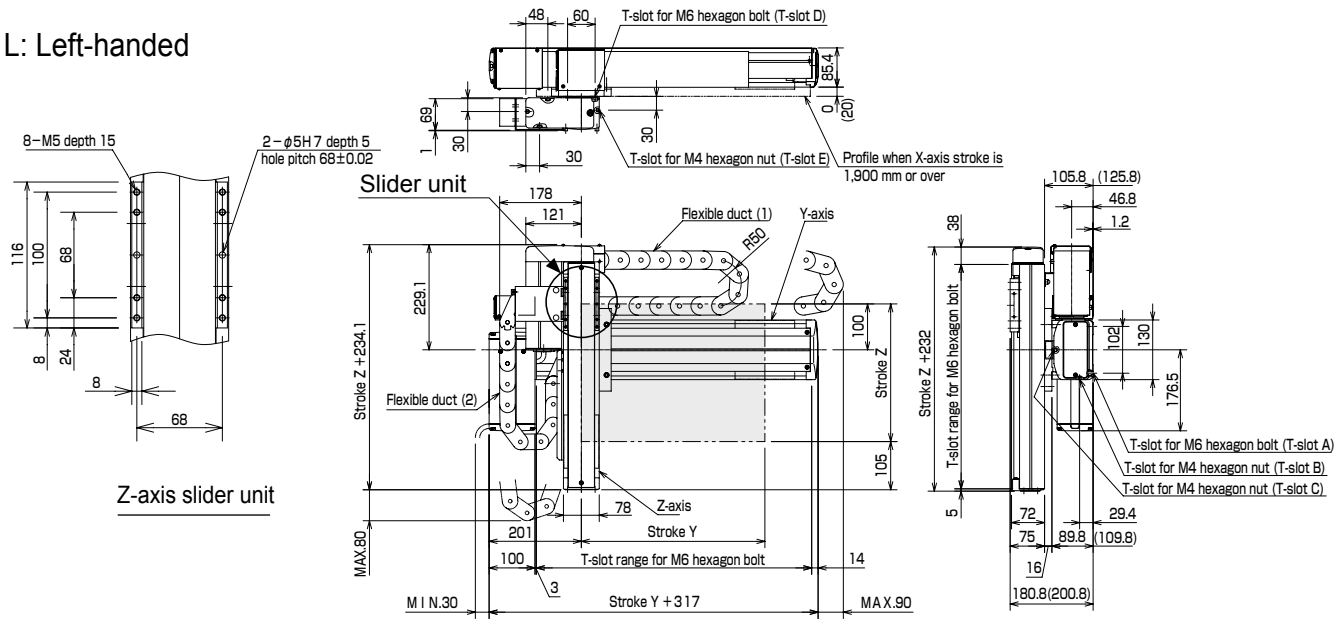

Example of Orthogonal Axes Combination: Y-Z Flexible duct spec

[Specifications]

	Y-axis	Z-axis
Axis type	KBB-50F-B□-M21N-□0	KBB-30E-U□-M10B-□0
Stroke (in increments of 100 mm)	200 to 2500mm	100 to 1000mm
Max. speed	1000mm/s	600mm/s (Note 1)
Positioning repeatability	±0.05mm	±0.01mm
Lead	21mm (ball screw lead)	10mm
Motor output	200W	100W, with brake
Resolution	0.01mm	

Acceleration/deceleration time when the maximum speed is set: 0.36 sec. or over

Timing belt type

Y-axis: Timing belt driven
Side mounted motor
Z-axis: Ball screw driven
Side mounted motor

Note 1: When the stroke is as given below, the maximum speed differs.

	Stroke (mm)	Max. speed (mm/s)
Z-axis	700	500
	800	400
	900 to 1000	300

Max. load capacity (kg) (Note 2)	Z-axis stroke									
	100mm	200mm	300mm	400mm	500mm	600mm	700mm	800mm	900mm	1000mm
	12.0	12.0	12.0	12.0	12.0	12.0	12.0	12.0	12.0	12.0

Note 2: Load capacity when a regenerative discharge unit (ABSU-2000) is used.

R: Right-handed

The values in ( ) are applicable when the Y-axis stroke is 1,900 mm or over.

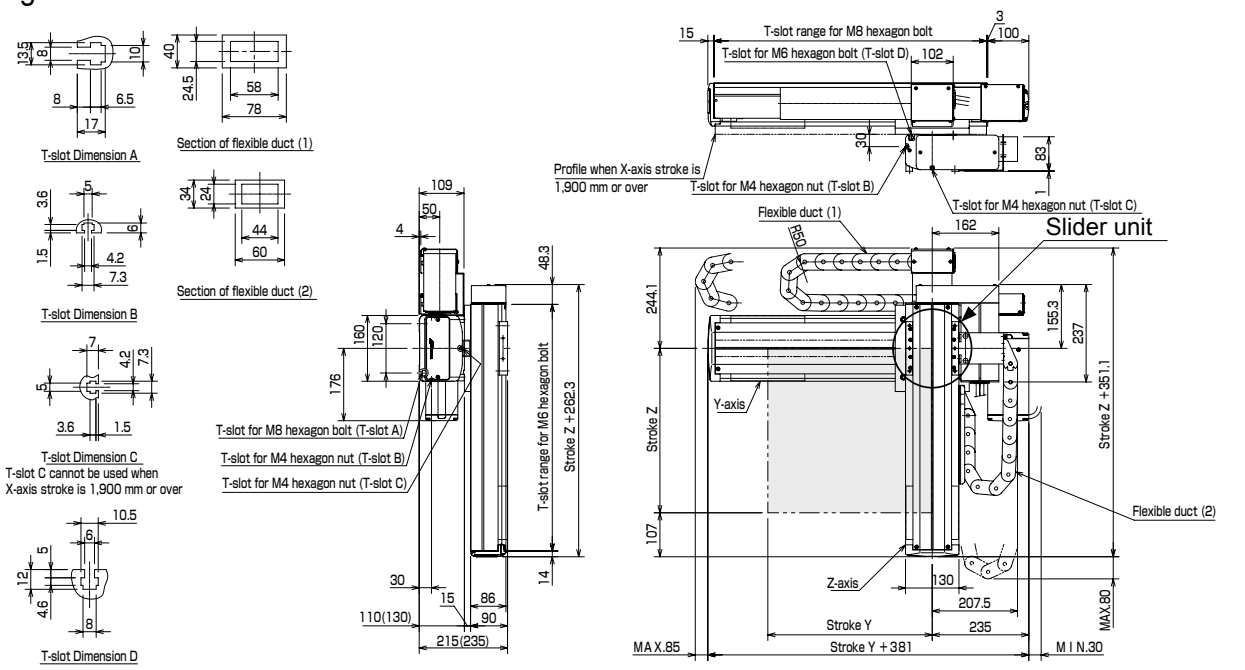

L: Left-handed

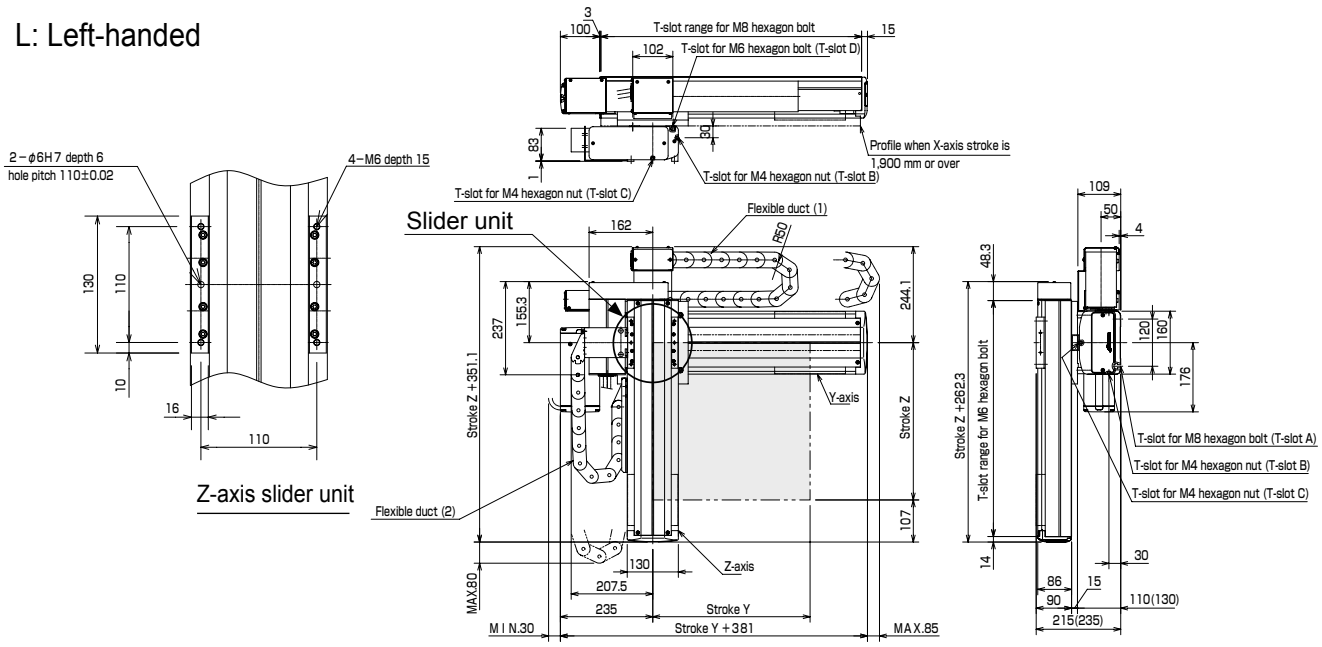

Discontinue

Example of Orthogonal Axes Combination: Y-Z Flexible duct spec

[Specifications]

	Y-axis	Z-axis
Axis type	KBB-50F-B□-M21N-□0	KBB-30F-U□-M10B-□0
Stroke (in increments of 100 mm)	200 to 2500mm	100 to 1000mm
Max. speed	1000mm/s	600mm/s (Note 1)
Positioning repeatability	±0.05mm	±0.01mm
Lead	21mm (ball screw lead)	10mm
Motor output	200W	100W, with brake
Resolution	0.01mm	

Acceleration/deceleration time when the maximum speed is set: 0.36 sec. or over

Timing belt type

Y-axis: Timing belt driven
Side mounted motor
Z-axis: Ball screw driven
Side mounted motor

Note 1: When the stroke is as given below, the maximum speed differs.

	Stroke (mm)	Max. speed (mm/s)
Z-axis	700	500
	800	400
	900 to 1000	300

Max. load capacity (kg) (Note 2)	Z-axis stroke									
	100mm	200mm	300mm	400mm	500mm	600mm	700mm	800mm	900mm	1000mm
	20.0	20.0	20.0	20.0	20.0	20.0	19.0	17.0	16.0	15.0

Note 2: Load capacity when a regenerative discharge unit (ABSU-2000) is used.

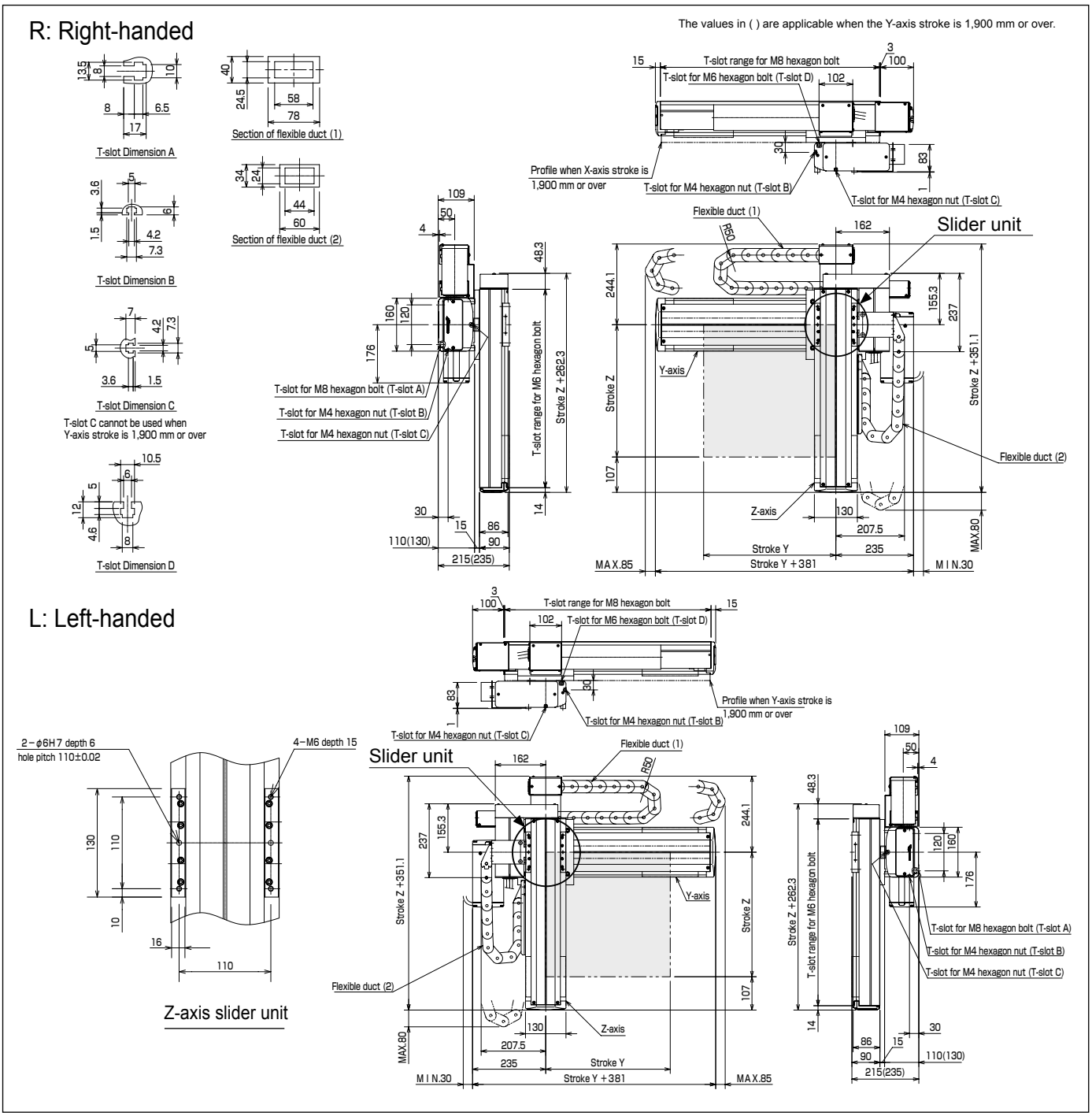

Example of Orthogonal Axes Combination: Z-Y Flexible duct spec

[Specifications]

	Z-axis	Y-axis
Axis type	KBB-10E-ST-M05B-□0	KBB-10E-ST-S20N-□5
Stroke (in increments of 100 mm)	100 to 1000mm	150 to 650mm
Max. speed	300mm/s (Note 1)	1200mm/s
Positioning repeatability	±0.01mm	
Lead	5mm	20mm
Motor output	100W, with brake	100W
Resolution	0.01mm	

Acceleration/deceleration time when the maximum speed is set: 0.36 sec. or over

Ball screw type

Z-axis: Ball screw driven
Motor straight
Y-axis: Ball screw driven
Motor straight

Note 1: When the stroke is as given below, the maximum speed differs.

	Stroke (mm)	Max. speed (mm/s)
Z-axis	700	250
	800	200
	900 to 1000	150

Max. load capacity (kg) (Note 2)	Y-axis stroke					
	150mm	250mm	350mm	450mm	550mm	650mm
	15.0	12.0	9.0	6.5	5.0	3.5

Note 2: Load capacity when a regenerative discharge unit (ABSU-2000) is used.

R: Right-handed

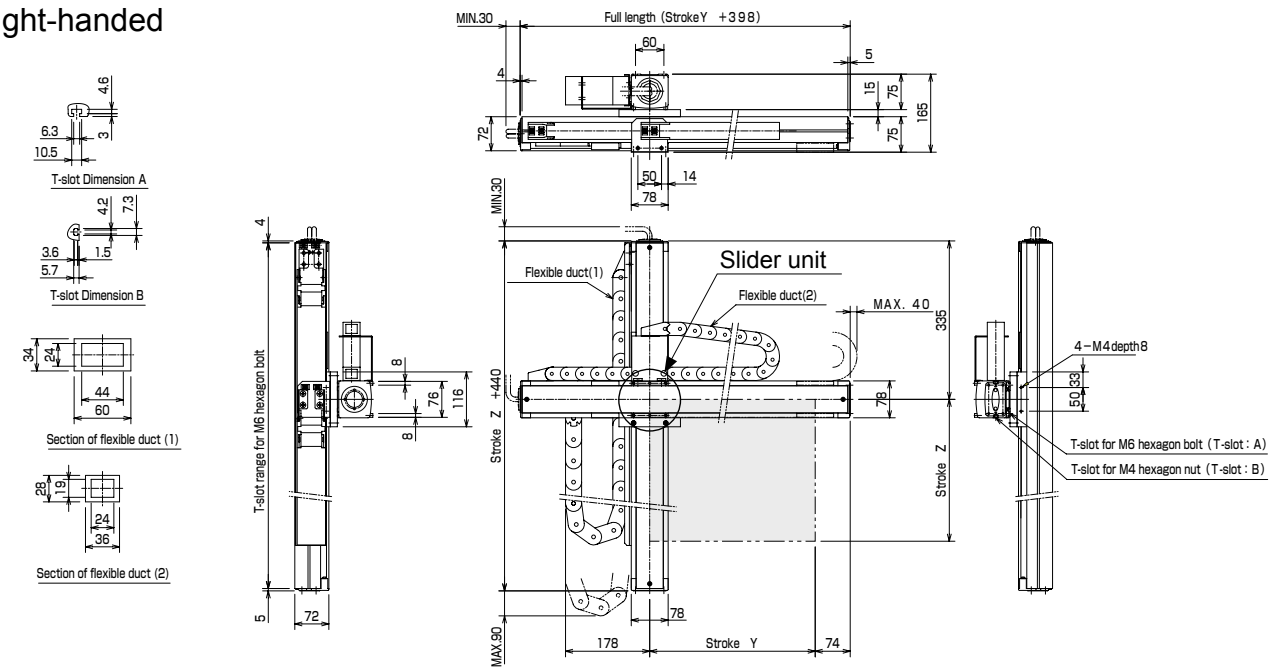

L: Left-handed

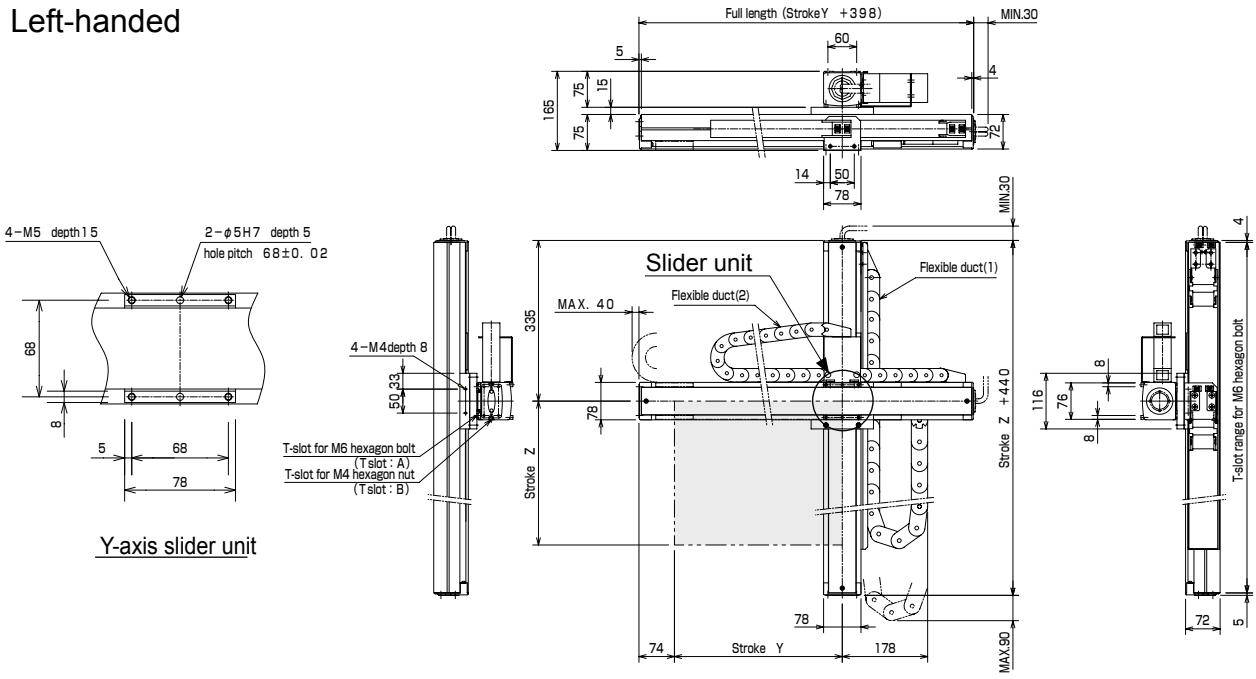

Discontinue

Example of Orthogonal Axes Combination: Z-Y Flexible duct spec

[Specifications]

	Z-axis	Y-axis
Axis type	KBB-10E-ST-M05B-□0	KBB-10E-ST-S20N-□5
Stroke (in increments of 100 mm)	100 to 1000mm	150 to 650mm
Max. speed	300mm/s (Note 1)	1200mm/s
Positioning repeatability	±0.01mm	
Lead	5mm	20mm
Motor output	100W, with brake	100W
Resolution	0.01mm	

Acceleration/deceleration time when the maximum speed is set: 0.36 sec. or over

Ball screw type

Z-axis: Ball screw driven
Motor straight
Y-axis: Ball screw driven
Motor straight

Note 1: When the stroke is as given below, the maximum speed differs.

	Stroke (mm)	Max. speed (mm/s)
Z-axis	700	250
	800	200
	900 to 1000	150

Max. load capacity (kg) (Note 2)	Y-axis stroke					
	150mm	250mm	350mm	450mm	550mm	650mm
	15.0	12.0	9.0	6.5	5.0	3.5

Note 2: Load capacity when a regenerative discharge unit (ABSU-2000) is used.

R: Right-handed

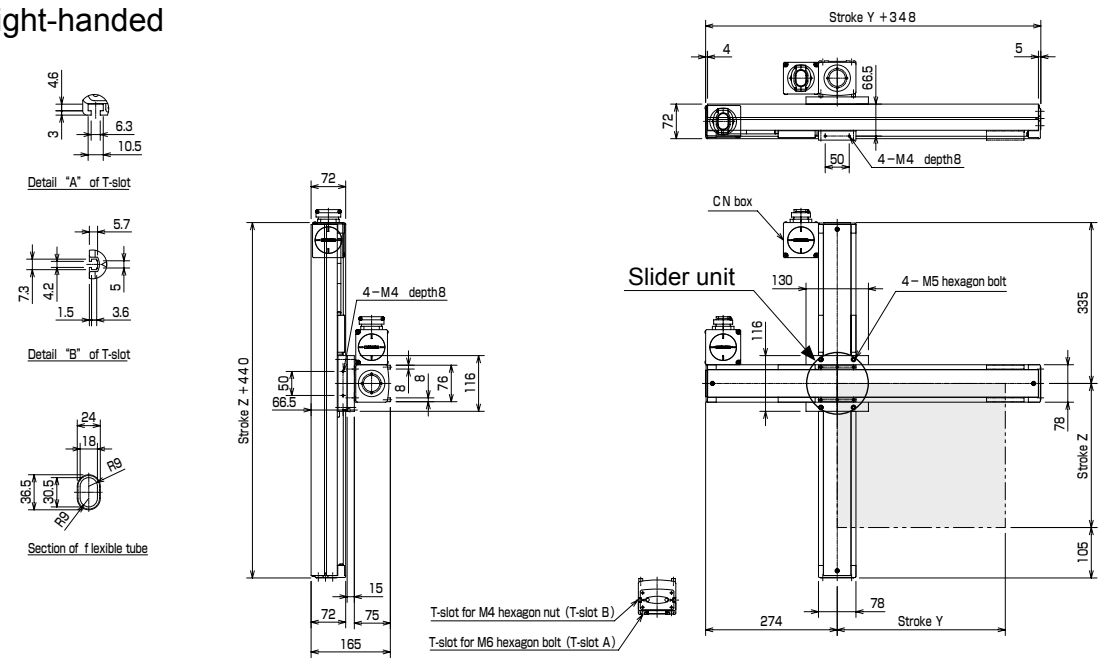

L: Left-handed

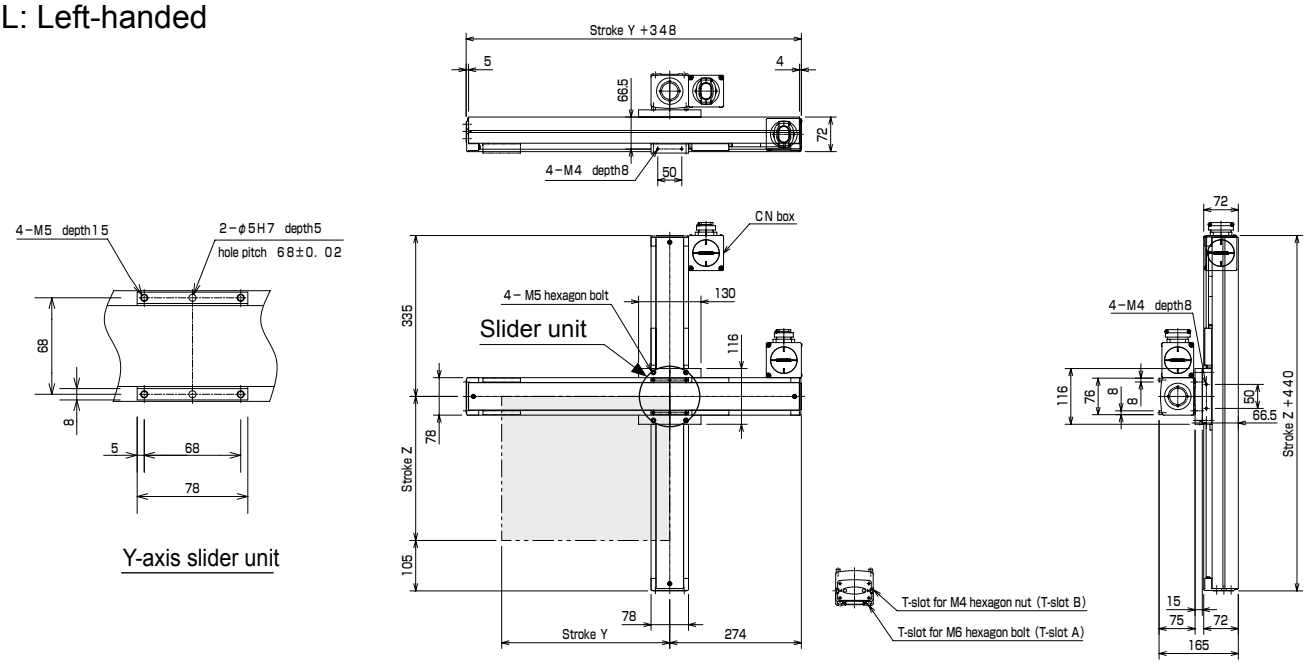

Example of Orthogonal Axes Combination: Z-Y Flexible duct spec

[Specifications]

	Z-axis	Y-axis
Axis type	KBB-30E-ST-M05B-□5	KBB-10E-ST-M20N-□0
Stroke (in increments of 100 mm)	150 to 1050mm	100 to 900mm
Max. speed	300mm/s (Note 1)	1200mm/s (Note 1)
Positioning repeatability	±0.01mm	
Lead	5mm	20mm
Motor output	100W, with brake	100W
Resolution	0.01mm	

Acceleration/deceleration time when the maximum speed is set: 0.36 sec. or over

Ball screw type

Z-axis: Ball screw driven
Motor straight
Y-axis: Ball screw driven
Motor straight

Note 1: When the stroke is as given below, the maximum speed differs.

	Stroke (mm)	Max. speed (mm/s)
Z-axis	750	250
	850	200
	950 to 1050	150
Y-axis	700	1000
	800	800
	900 to 1000	600

Max. load capacity (kg) (Note 2)	Y-axis stroke								
	100mm	200mm	300mm	400mm	500mm	600mm	700mm	800mm	900mm
	15.0	15.0	14.0	12.0	9.0	7.0	5.0	3.0	1.0

Note 2: Load capacity when a regenerative discharge unit (ABSU-2000) is used.

R: Right-handed

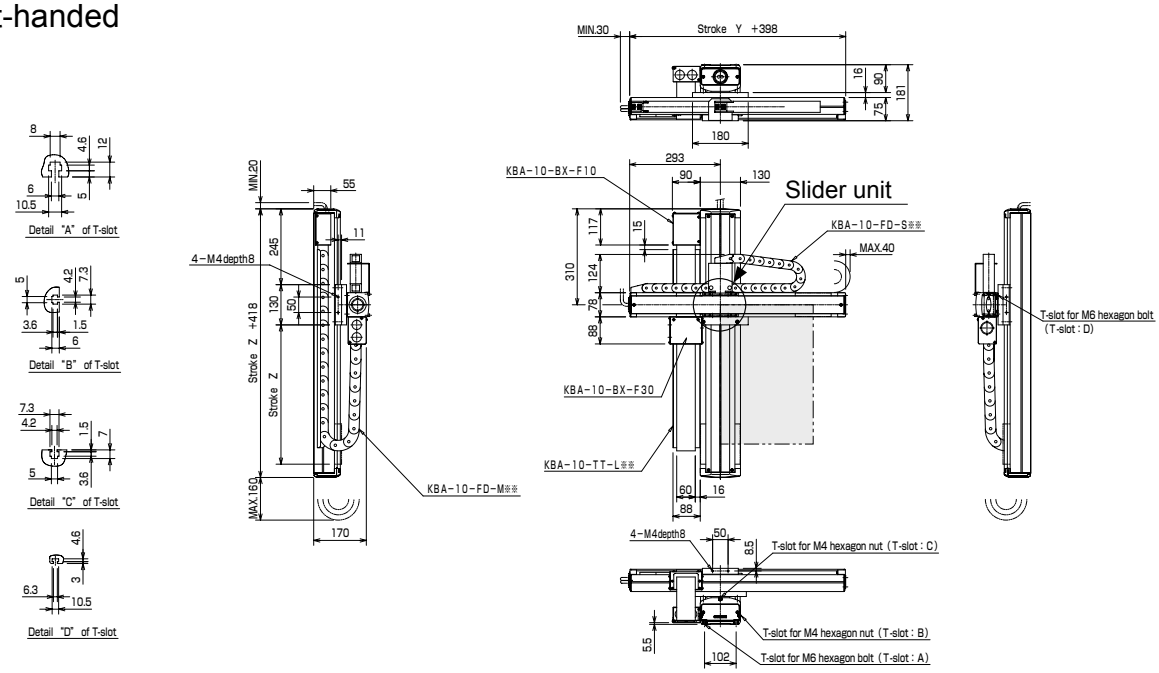

L: Left-handed

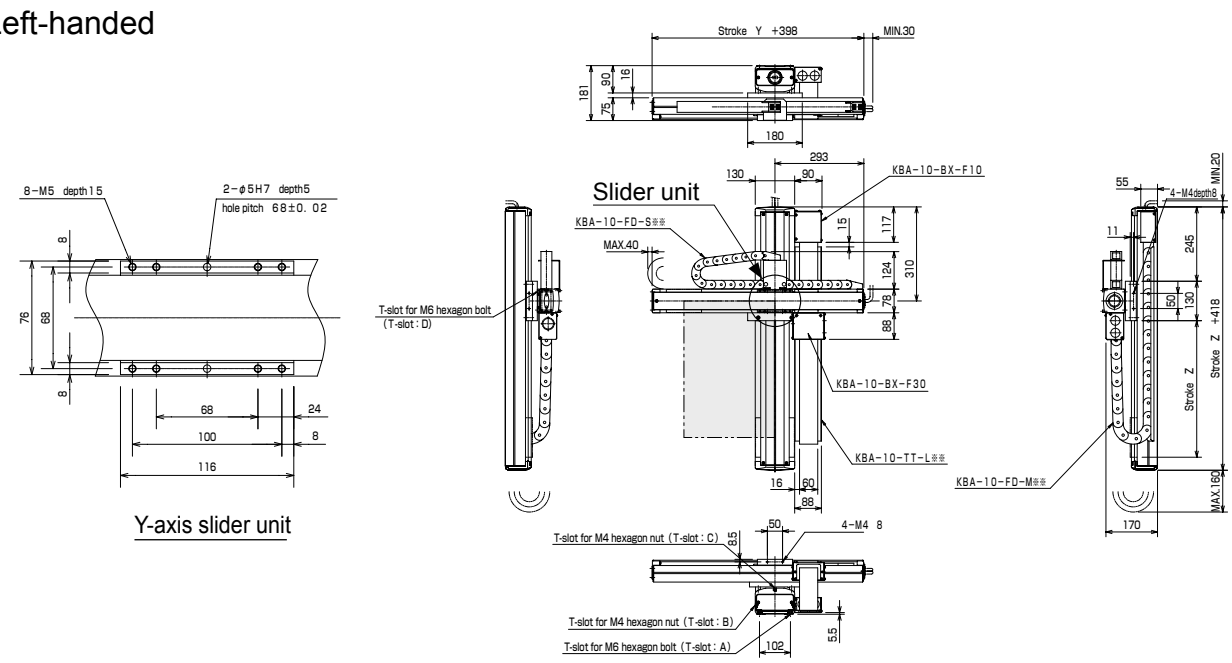

Discontinue

Example of Orthogonal Axes Combination: Z-Y Flexible duct spec

[Specifications]

	Z-axis	Y-axis
Axis type	KBB-30E-ST-M05B-□5	KBB-10E-ST-M20N-□0
Stroke (in increments of 100 mm)	150 to 1050mm	100 to 900mm
Max. speed	300mm/s (Note 1)	1200mm/s (Note 1)
Positioning repeatability	±0.01mm	
Lead	5mm	20mm
Motor output	100W, with brake	100W
Resolution	0.01mm	

Acceleration/deceleration time when the maximum speed is set: 0.36 sec. or over

Ball screw type

Z-axis: Ball screw driven
Motor straight
Y-axis: Ball screw driven
Motor straight

Note 1: When the stroke is as given below, the maximum speed differs.

	Stroke (mm)	Max. speed (mm/s)
Z-axis	750	250
	850	200
	950 to 1050	150
Y-axis	700	1000
	800	800
	900 to 1000	600

Max. load capacity (kg) (Note 2)	Y-axis stroke								
	100mm	200mm	300mm	400mm	500mm	600mm	700mm	800mm	900mm
	15.0	15.0	14.0	12.0	9.0	7.0	5.0	3.0	1.0

Note 2: Load capacity when a regenerative discharge unit (ABSU-2000) is used.

R: Right-handed

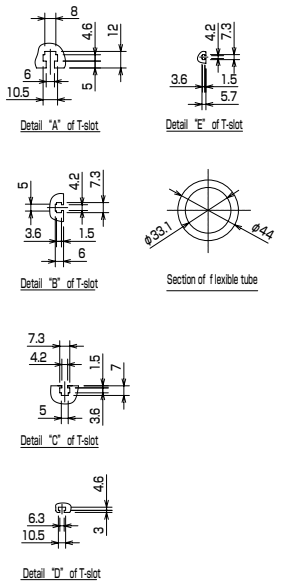

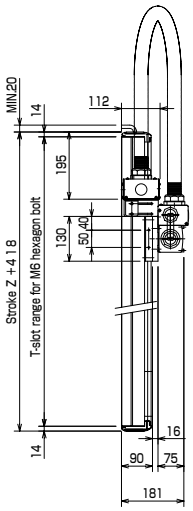

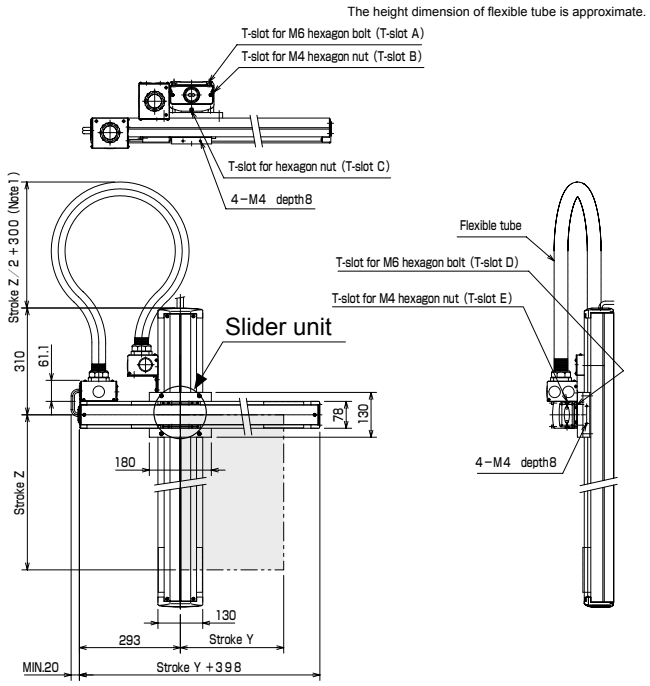

L: Left-handed

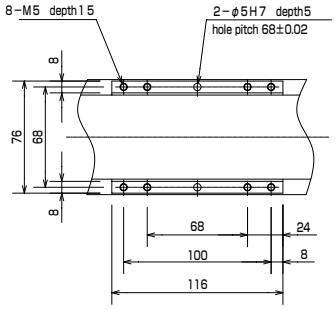

Y-axis slider unit

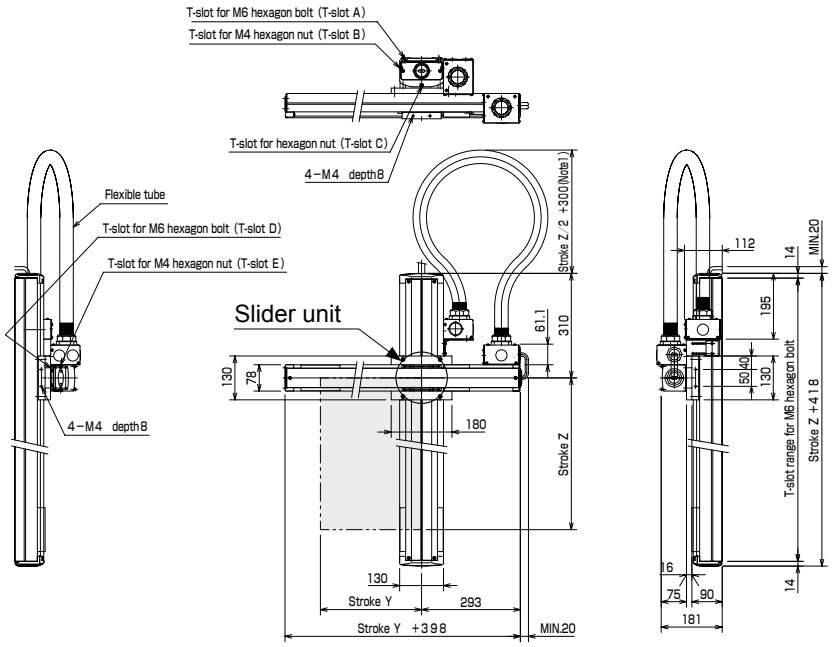

Z-Y Flexible tube

Example of Orthogonal Axes Combination: Z-Y Flexible duct spec

[Specifications]

	Z-axis	Y-axis
Axis type	KBB-30F-ST-M05B-□5	KBB-10E-ST-M20N-□0
Stroke (in increments of 100 mm)	100 to 1000mm	100 to 900mm
Max. speed	300mm/s (Note 1)	1200mm/s (Note 1)
Positioning repeatability	±0.01mm	
Lead	5mm	20mm
Motor output	200W, with brake	100W
Resolution	0.01mm	

Acceleration/deceleration time when the maximum speed is set: 0.36 sec. or over

Ball screw type

Z-axis: Ball screw driven
Motor straight
Y-axis: Ball screw driven
Motor straight

Note 1: When the stroke is as given below, the maximum speed differs.

	Stroke (mm)	Max. speed (mm/s)
Z-axis	700	250
	800	200
	900 to 1000	150
Y-axis	700	1000
	800	800
	900 to 1000	600

Max. load capacity (kg) (Note 2)	Y-axis stroke								
	100mm	200mm	300mm	400mm	500mm	600mm	700mm	800mm	900mm
	15.0	15.0	15.0	12.0	9.0	7.0	5.0	3.0	1.0

Note 2: Load capacity when a regenerative discharge unit (ABSU-2000) is used.

R: Right-handed

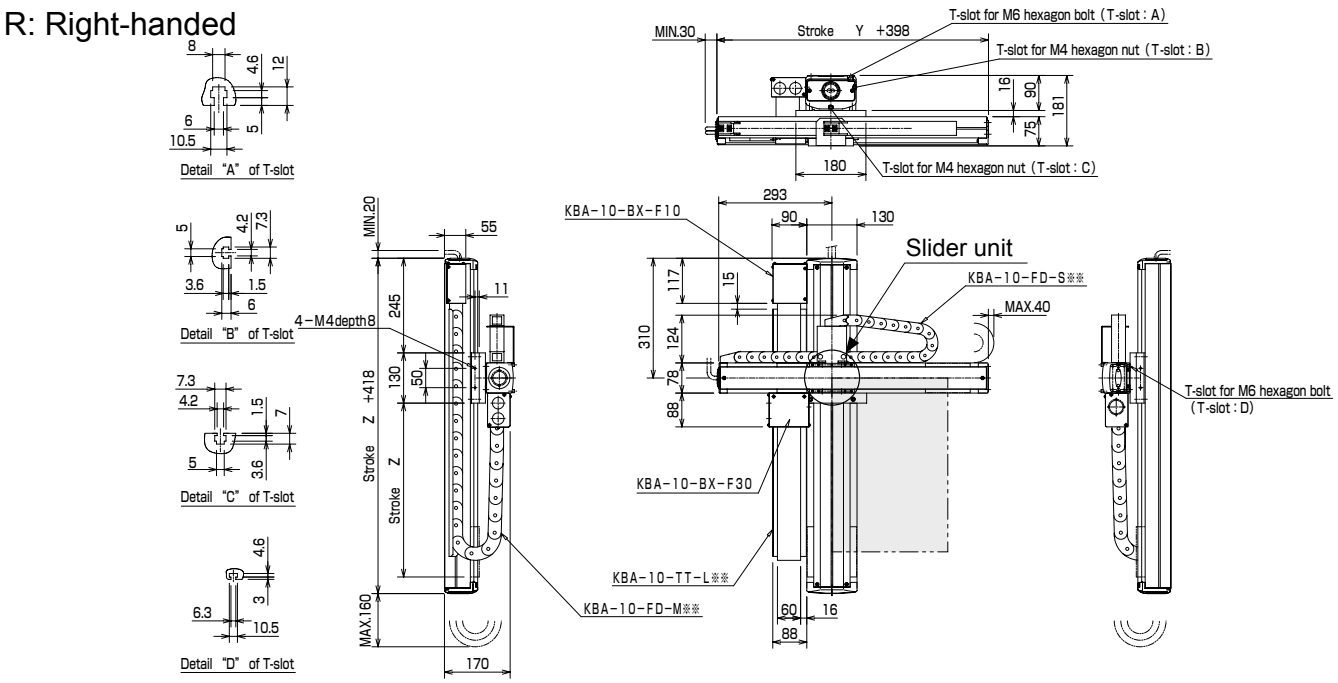

L: Left-handed

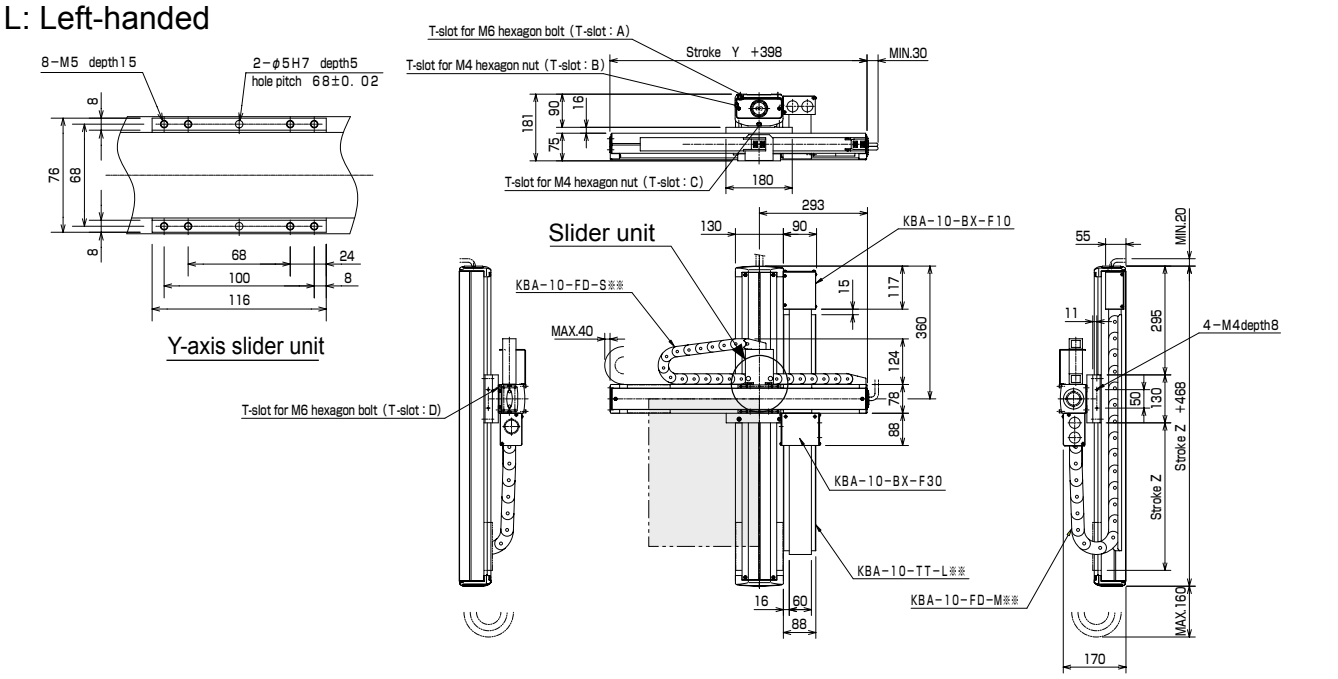

Discontinue

Example of Orthogonal Axes Combination: Z-Y Flexible duct spec

[Specifications]

	Z-axis	Y-axis
Axis type	KBB-30F-ST-M05B-□0	KBB-10E-ST-M20N-□0
Stroke (in increments of 100 mm)	100 to 1000mm	100 to 900mm
Max. speed	300mm/s (Note 1)	1200mm/s (Note 1)
Positioning repeatability	±0.01mm	
Lead	5mm	20mm
Motor output	200W, with brake	100W
Resolution	0.01mm	

Acceleration/deceleration time when the maximum speed is set: 0.36 sec. or over

Ball screw type

Z-axis: Ball screw driven
Motor straight
Y-axis: Ball screw driven
Motor straight

Note 1: When the stroke is as given below, the maximum speed differs.

	Stroke (mm)	Max. speed (mm/s)
Z-axis	700	250
	800	200
	900 to 1000	150
Y-axis	700	1000
	800	800
	900 to 1000	600

Max. load capacity (kg) (Note 2)	Y-axis stroke								
	100mm	200mm	300mm	400mm	500mm	600mm	700mm	800mm	900mm
	15.0	15.0	15.0	12.0	9.0	7.0	5.0	3.0	1.0

Note 2: Load capacity when a regenerative discharge unit (ABSU-2000) is used.

R: Right-handed

The height dimension of flexible tube is approximate.

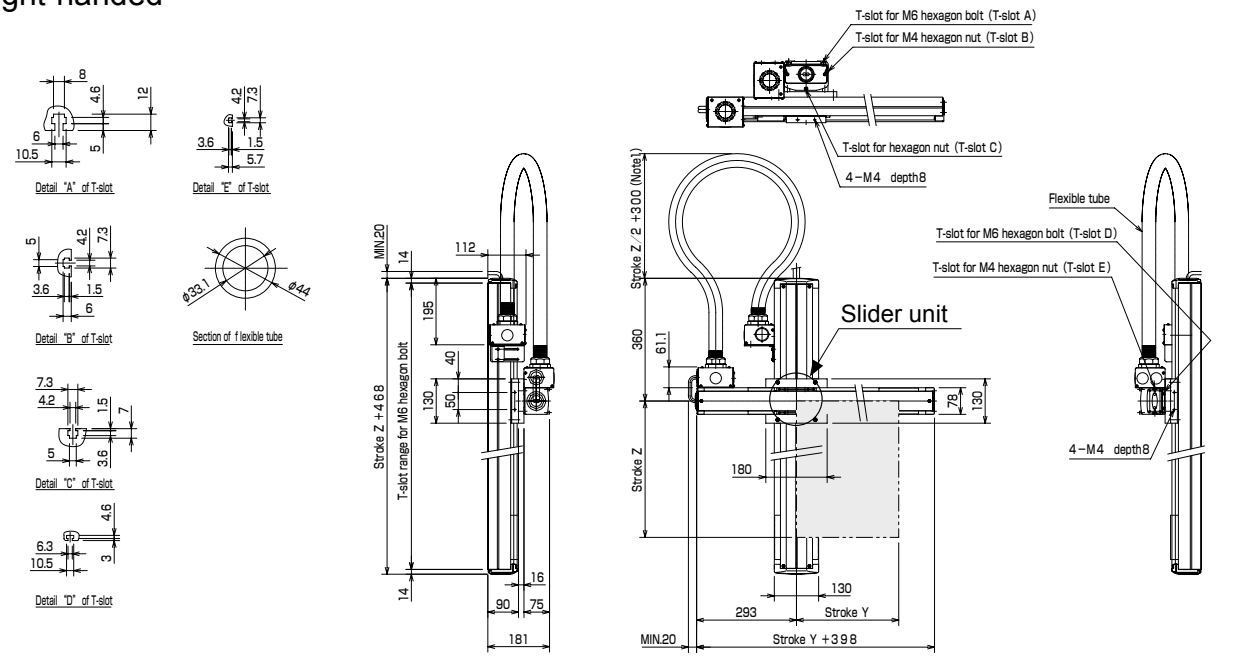

L: Left-handed

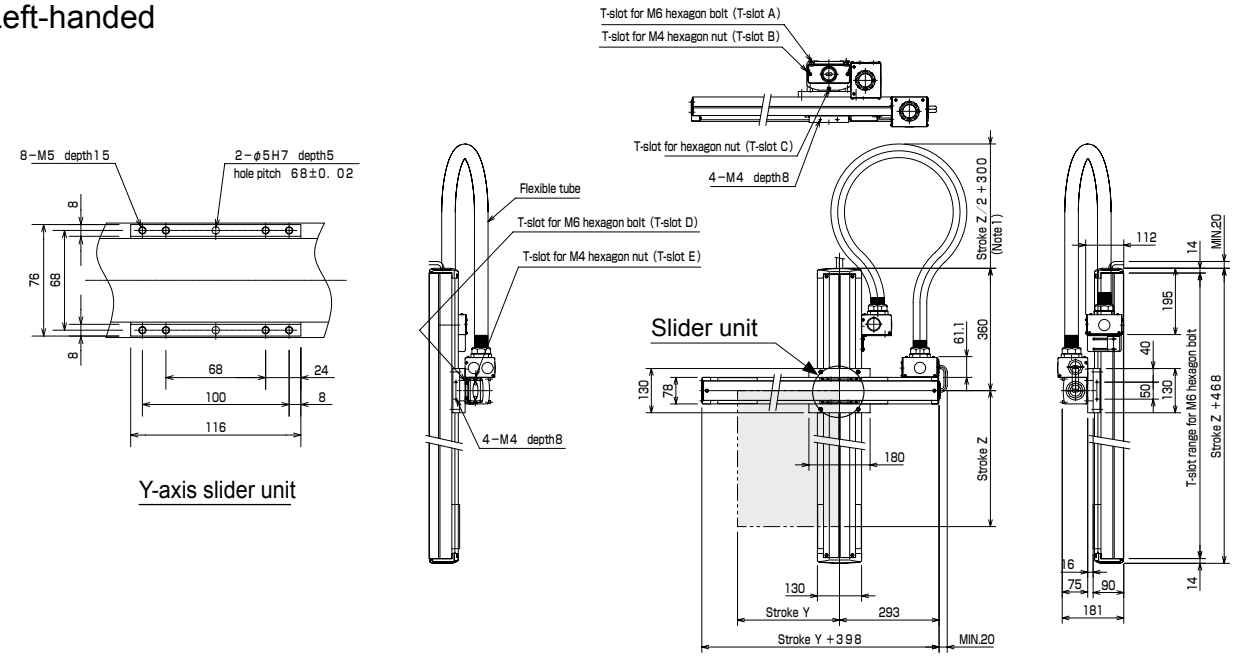

Example of Orthogonal Axes Combination: Z-Y Flexible duct spec

[Specifications]

	Z-axis	Y-axis
Axis type	KBB-50F-ST-M05B-□0	KBB-30E-ST-M20N-□5
Stroke (in increments of 100 mm)	200 to 1500mm	150 to 1050mm
Max. speed	300mm/s (Note 1)	1200mm/s (Note 1)
Positioning repeatability	±0.01mm	
Lead	5mm	20mm
Motor output	200W, with brake	100W
Resolution	0.01mm	

Acceleration/deceleration time when the maximum speed is set: 0.36 sec. or over

Ball screw type

Z-axis: Ball screw driven
Motor straight
Y-axis: Ball screw driven
Motor straight

Note 1: When the stroke is as given below, the maximum speed differs.

	Stroke (mm)	Max. speed (mm/s)
Z-axis	700 to 800	280
	900 to 1000	250
	1100 to 1200	180
	1300	130
	1400	100
	1500	80
Y-axis	750	1000
	850	800
	950 to 1050	600

Max. load capacity (kg) (Note 2)	Y-axis stroke									
	150mm	250mm	350mm	450mm	550mm	650mm	750mm	850mm	950mm	1050mm
	20.0	20.0	20.0	20.0	20.0	20.0	18.0	14.0	11.0	7.0

Note 2: Load capacity when a regenerative discharge unit (ABSU-2000) is used.

R: Right-handed

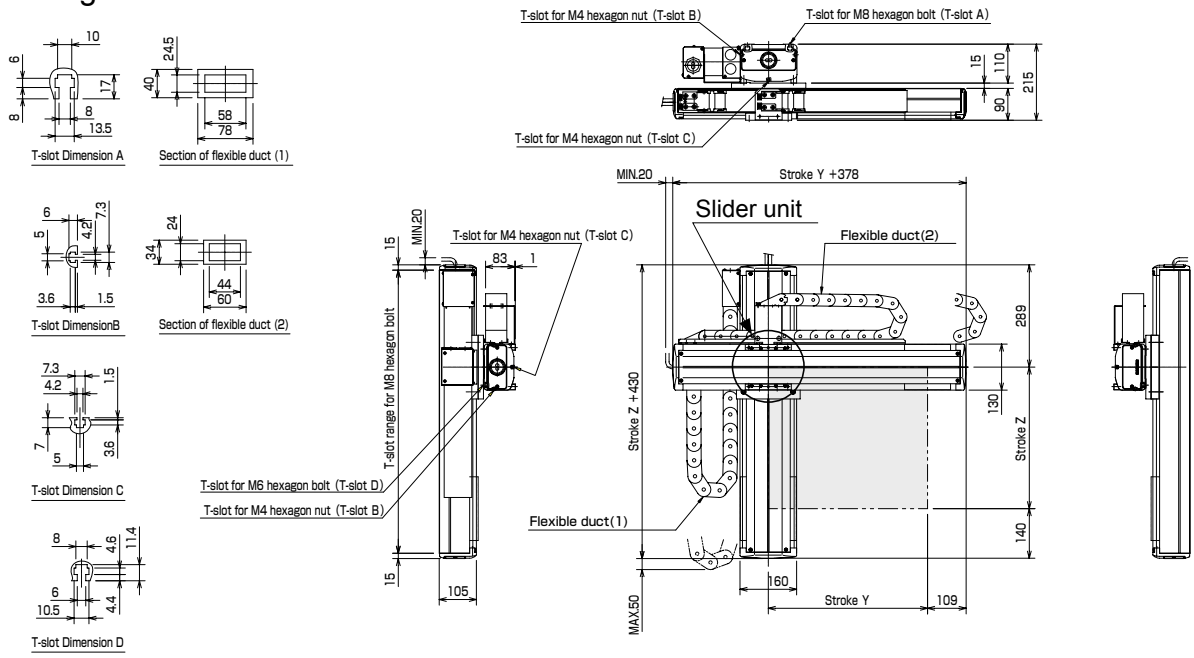

L: Left-handed

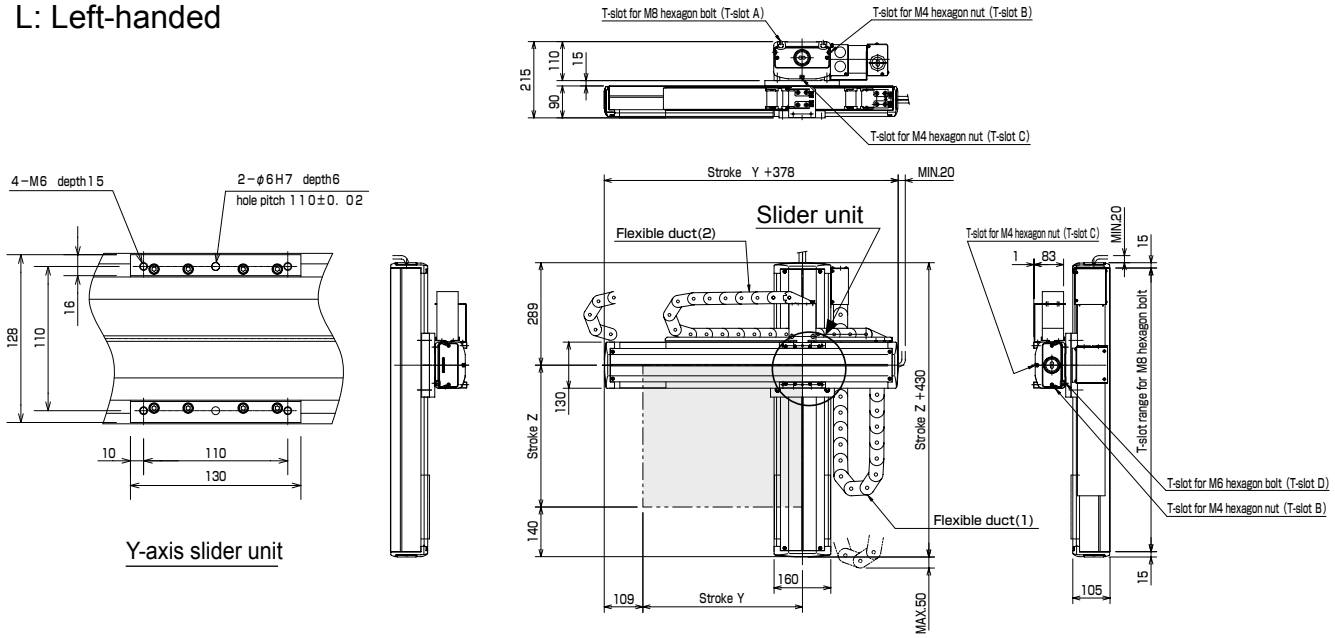

Discontinue

Example of Orthogonal Axes Combination: Z-Y Flexible duct spec

[Specifications]

	Z-axis	Y-axis
Axis type	KBB-50F-ST-M05B-□0	KBB-30E-ST-M20N-□5
Stroke (in increments of 100 mm)	200 to 1500mm	150 to 1050mm
Max. speed	300mm/s (Note 1)	1200mm/s (Note 1)
Positioning repeatability	±0.01mm	
Lead	5mm	20mm
Motor output	200W, with brake	100W
Resolution	0.01mm	

Acceleration/deceleration time when the maximum speed is set: 0.36 sec. or over

Ball screw type

Z-axis: Ball screw driven
Motor straight
Y-axis: Ball screw driven
Motor straight

Note 1: When the stroke is as given below, the maximum speed differs.

	Stroke (mm)	Max. speed (mm/s)
Z-axis	700 to 800	280
	900 to 1000	250
	1100 to 1200	180
	1300	130
	1400	100
	1500	80
Y-axis	750	1000
	850	800
	950 to 1050	600

Max. load capacity (kg) (Note 2)	Y-axis stroke									
	150mm	250mm	350mm	450mm	550mm	650mm	750mm	850mm	950mm	1050mm
	20.0	20.0	20.0	20.0	20.0	20.0	18.0	14.0	11.0	7.0

Note 2: Load capacity when a regenerative discharge unit (ABSU-2000) is used.

R: Right-handed

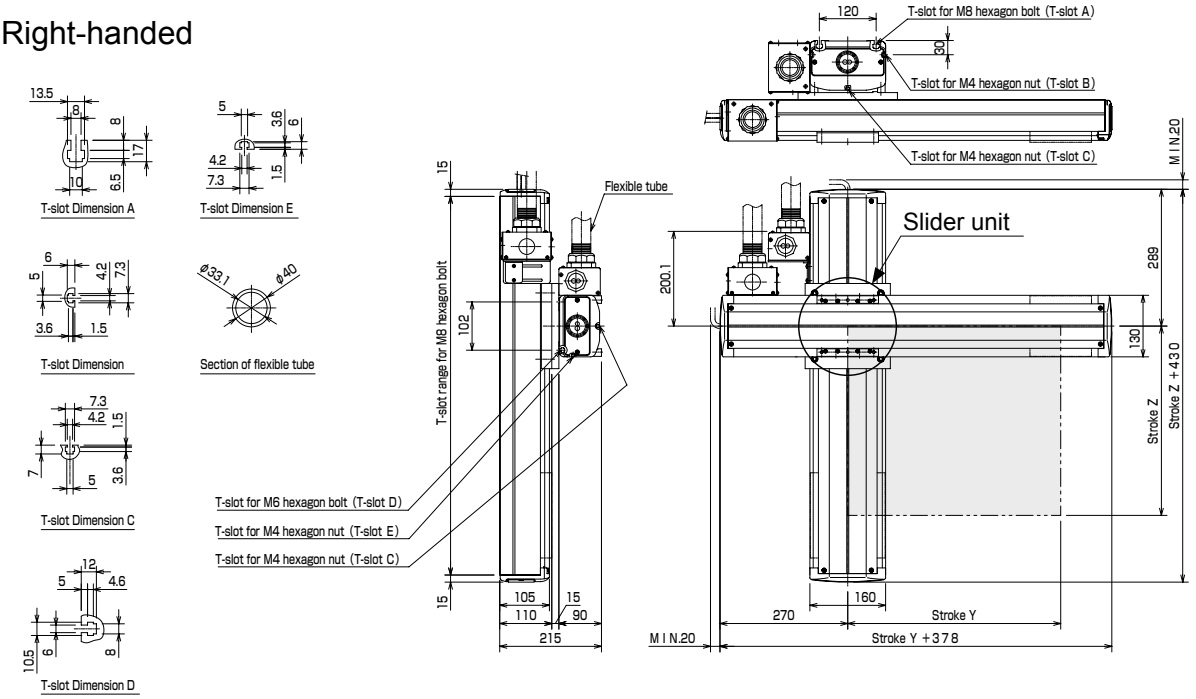

L: Left-handed

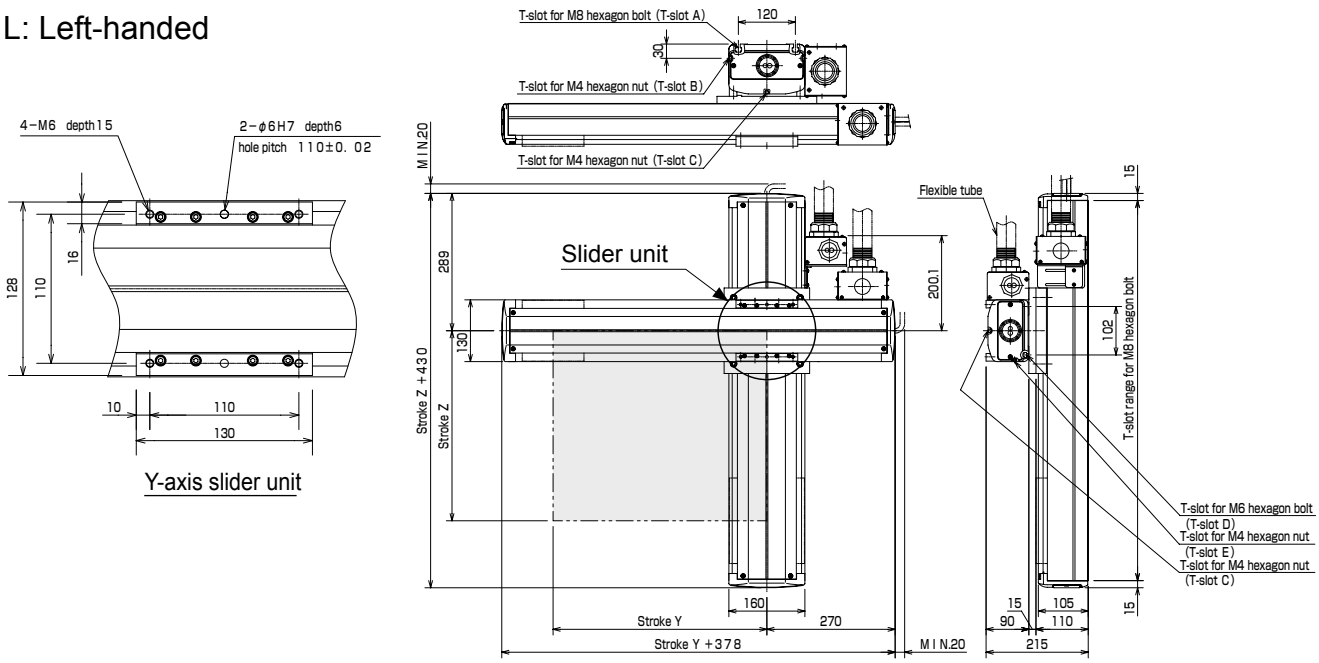

Example of Orthogonal Axes Combination: Z-Y Flexible duct spec

[Specifications]

	Z-axis	Y-axis
Axis type	KBB-50F-ST-M05B-□0	KBB-30F-ST-M20N-□0
Stroke (in increments of 100 mm)	200 to 1500mm	100 to 1000mm
Max. speed	300mm/s (Note 1)	1200mm/s (Note 1)
Positioning repeatability	±0.01mm	
Lead	5mm	20mm
Motor output	200W, with brake	200W
Resolution	0.01mm	

Acceleration/deceleration time when the maximum speed is set: 0.36 sec. or over

Max. load capacity (kg) (Note 2)	Y-axis stroke									
	100mm	200mm	300mm	400mm	500mm	600mm	700mm	800mm	900mm	1000mm
	38.0	37.0	36.0	34.0	29.0	23.0	18.0	14.0	11.0	7.0

Note 2: Load capacity when a regenerative discharge unit (ABSU-2000) is used.

Ball screw type

Z-axis: Ball screw driven
Motor straight
Y-axis: Ball screw driven
Motor straight

Note 1: When the stroke is as given below, the maximum speed differs.

	Stroke (mm)	Max. speed (mm/s)
Z-axis	700 to 800	280
	900 to 1000	250
	1100 to 1200	180
	1300	130
	1400	100
	1500	80
Y-axis	700	1000
	800	800
	900 to 1000	600

R: Right-handed

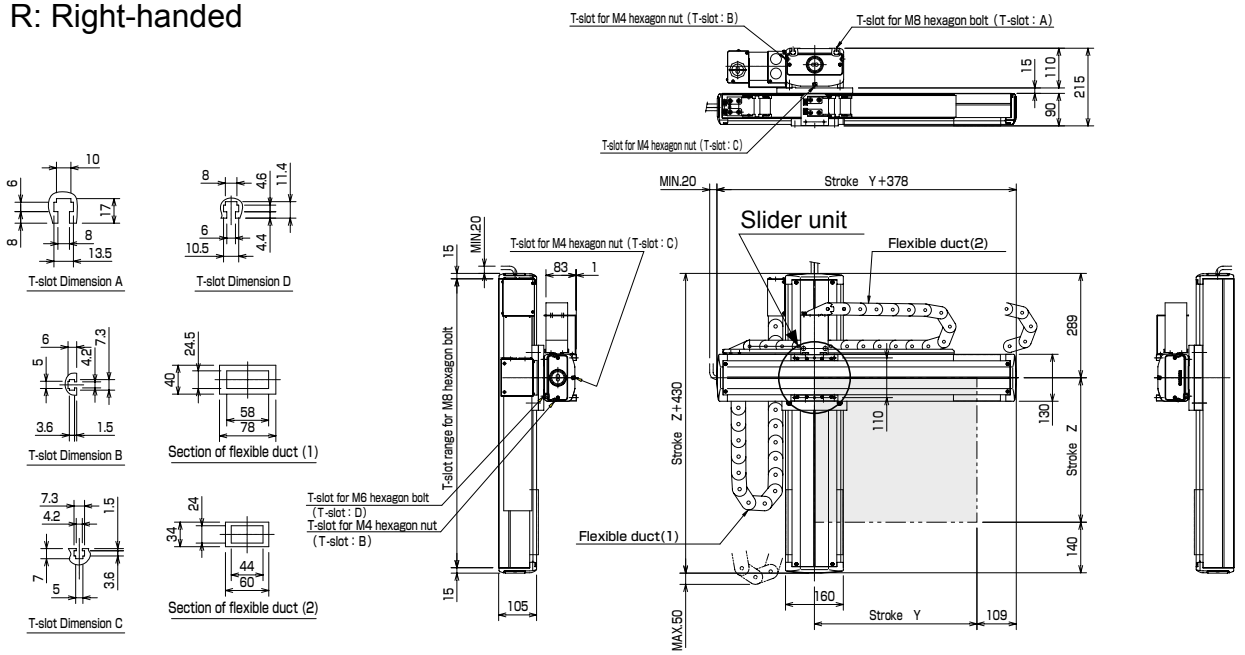

L: Left-handed

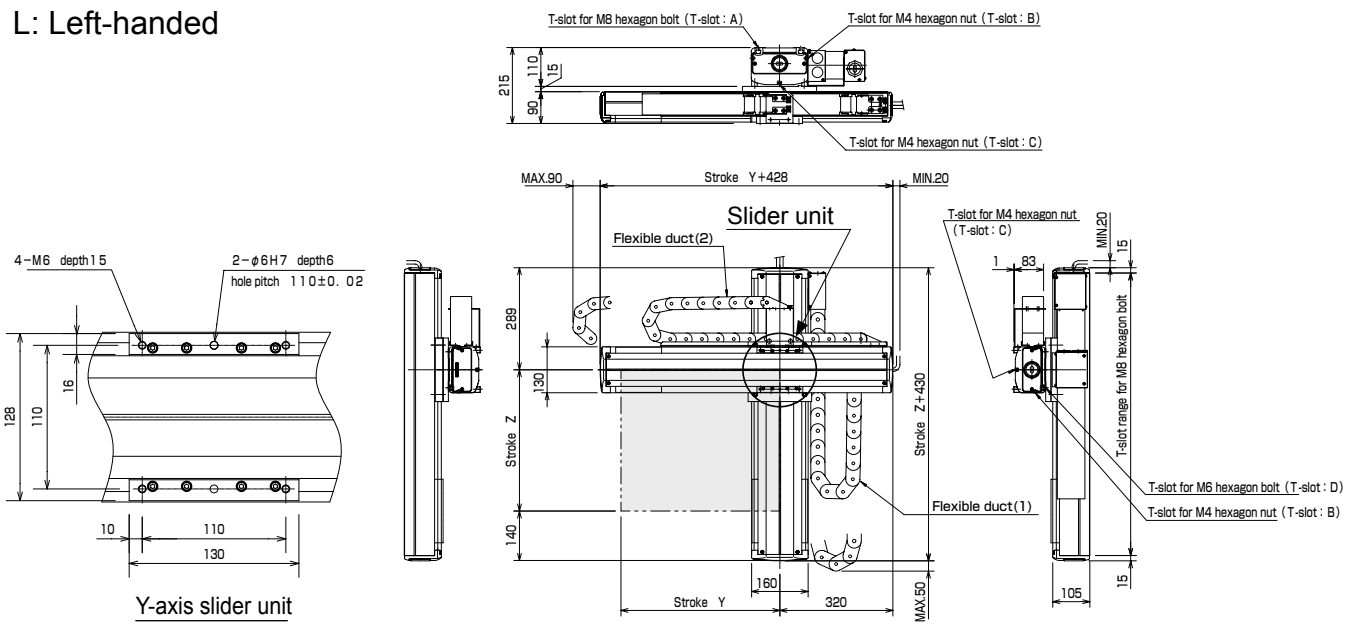

Discontinue

Example of Orthogonal Axes Combination: Z-Y Flexible duct spec

[Specifications]

	Z-axis	Y-axis
Axis type	KBB-50F-ST-M05B-□0	KBB-30F-ST-M20N-□0
Stroke (in increments of 100 mm)	200 to 1500mm	100 to 1000mm
Max. speed	300mm/s (Note 1)	1200mm/s (Note 1)
Positioning repeatability	±0.01mm	
Lead	5mm	20mm
Motor output	200W, with brake	200W
Resolution	0.01mm	

Acceleration/deceleration time when the maximum speed is set: 0.36 sec. or over

Ball screw type

Z-axis: Ball screw driven
Motor straight
Y-axis: Ball screw driven
Motor straight

Note 1: When the stroke is as given below, the maximum speed differs.

	Stroke (mm)	Max. speed (mm/s)
Z-axis	700 to 800	280
	900 to 1000	250
	1100 to 1200	180
	1300	130
	1400	100
	1500	80
Y-axis	700	1000
	800	800
	900 to 1000	600

Max. load capacity (kg) (Note 2)	Y-axis stroke									
	100mm	200mm	300mm	400mm	500mm	600mm	700mm	800mm	900mm	1000mm
	38.0	37.0	36.0	34.0	29.0	23.0	18.0	14.0	11.0	7.0

Note 2: Load capacity when a regenerative discharge unit (ABSU-2000) is used.

R: Right-handed

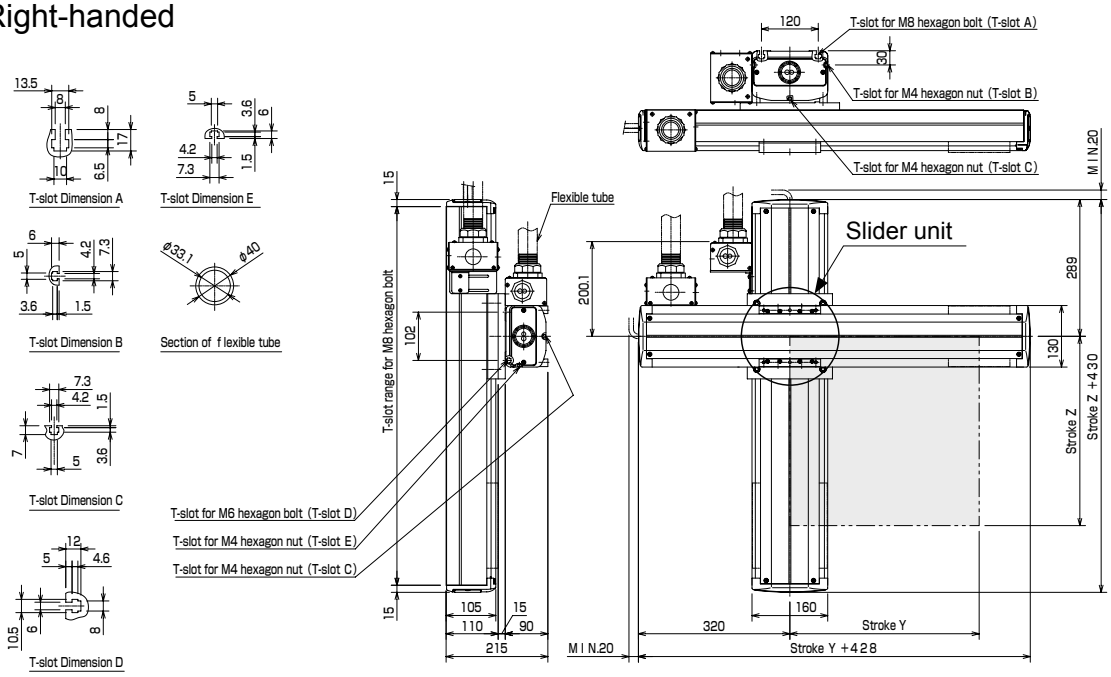

L: Left-handed

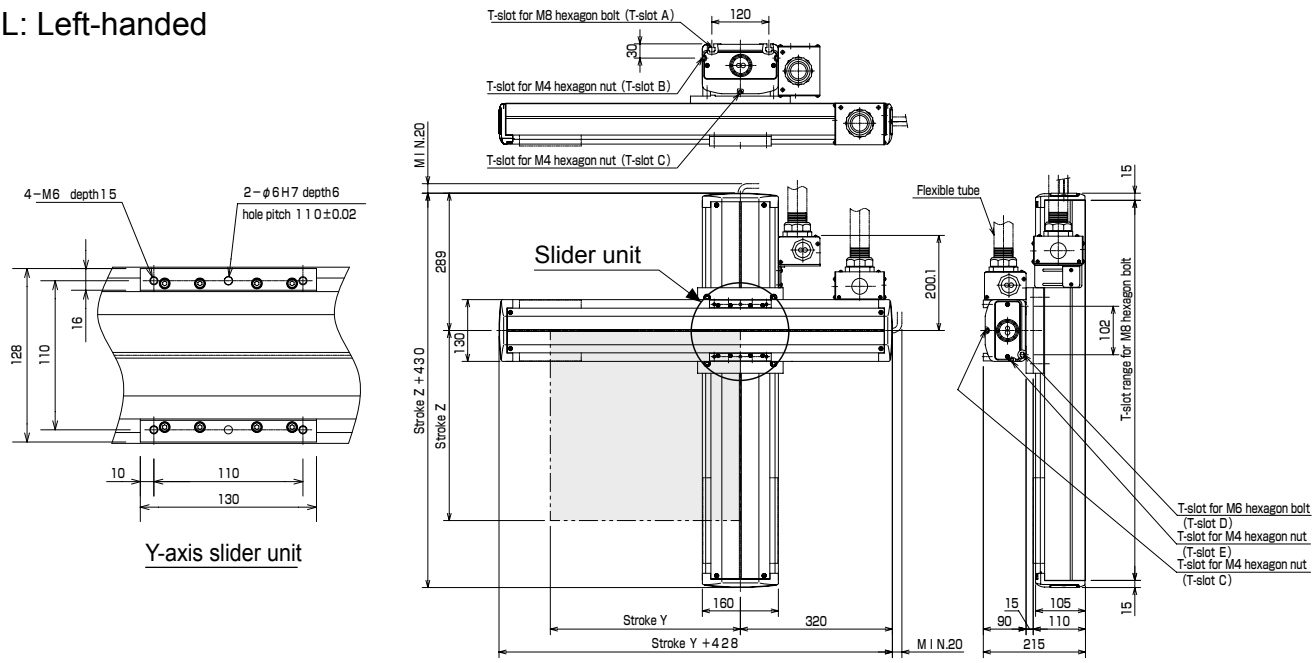

Example of Orthogonal Axes Combination: Z-Y Flexible duct spec

[Specifications]

	Z-axis	Y-axis
Axis type	KBB-10E-ST-M05B-□0	KBB-10E-B□-S21N-□5
Stroke (in increments of 100 mm)	100 to 1000mm	150 to 650mm
Max. speed	300mm/s (Note 1)	1000mm/s
Positioning repeatability	±0.01mm	±0.05mm
Lead	5mm	21mm (ball screw lead)
Motor output	100W, with brake	100W
Resolution	0.01mm	

Acceleration/deceleration time when the maximum speed is set: 0.36 sec. or over

Timing belt type

Z-axis: Ball screw driven
Motor straight
Y-axis: Ball screw driven
Side mounted motor

Note 1: When the stroke is as given below, the maximum speed differs.

	Stroke (mm)	Max. speed (mm/s)
Z-axis	700	250
	800	200
	900 to 1000	150

Max. load capacity (kg) (Note 2)	Z-axis stroke					
	150mm	250mm	350mm	450mm	550mm	650mm
	15.0	12.0	9.0	6.0	5.0	3.0

Note 2: Load capacity when a regenerative discharge unit (ABSU-2000) is used.

R: Right-handed

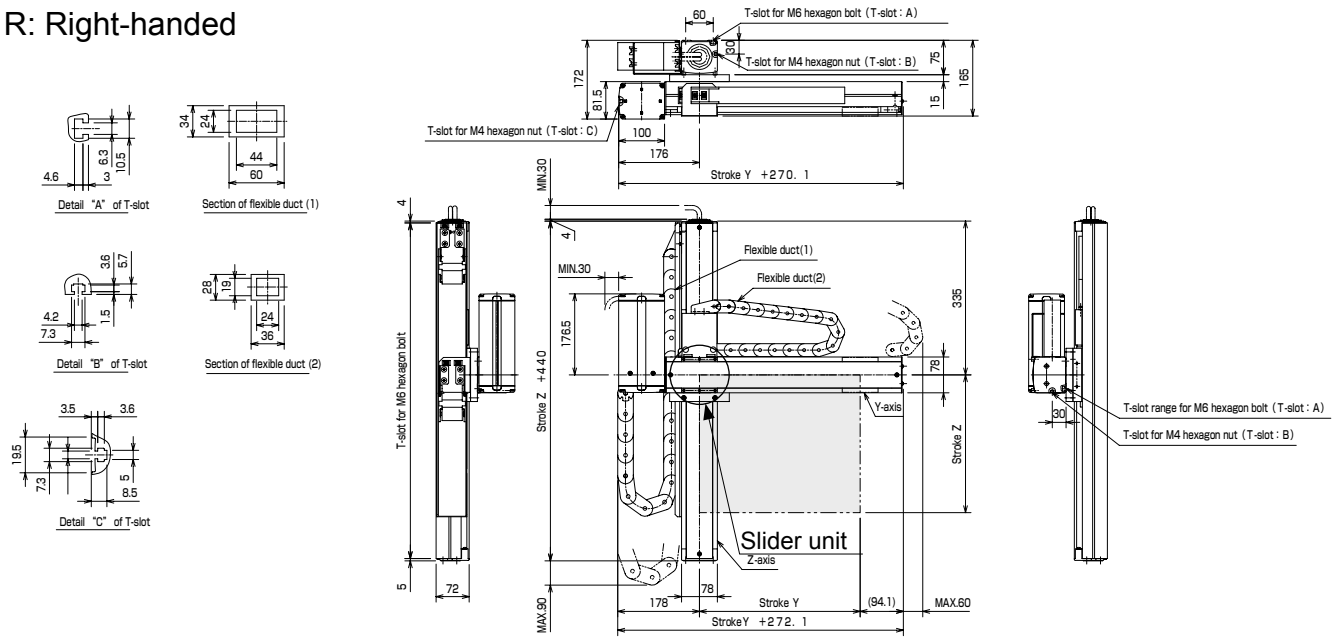

L: Left-handed

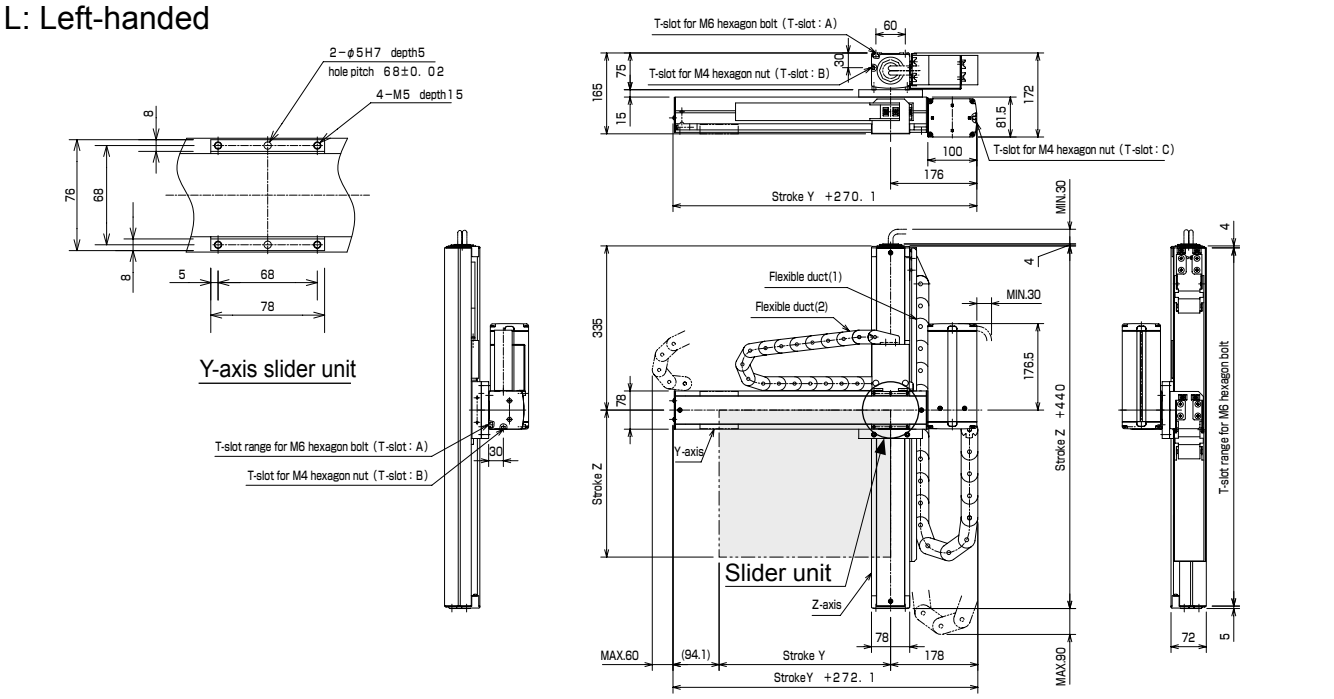

Discontinue

Example of Orthogonal Axes Combination: Z-Y Flexible duct spec

[Specifications]

	Z-axis	Y-axis
Axis type	KBB-30E-ST-M05B-□5	KBB-10E-B□-M21N-□0
Stroke (in increments of 100 mm)	150 to 1050mm	100 to 800mm
Max. speed	300mm/s (Note 1)	1000mm/s
Positioning repeatability	±0.01mm	±0.05mm
Lead	5mm	21mm (ball screw lead)
Motor output	100W, with brake	100W
Resolution	0.01mm	

Acceleration/deceleration time when the maximum speed is set: 0.36 sec. or over

Timing belt type

Z-axis: Ball screw driven
Motor straight
Y-axis: Timing belt driven
Side mounted motor

Note 1: When the stroke is as given below, the maximum speed differs.

	Stroke (mm)	Max. speed (mm/s)
Z-axis	750	250
	850	200
	950 to 1050	150

Max. load capacity (kg) (Note 2)	Z-axis stroke							
	100mm	200mm	300mm	400mm	500mm	600mm	700mm	800mm
	15.0	15.0	15.0	12.0	8.0	6.0	4.0	1.0

Note 2: Load capacity when a regenerative discharge unit (ABSU-2000) is used.

R: Right-handed

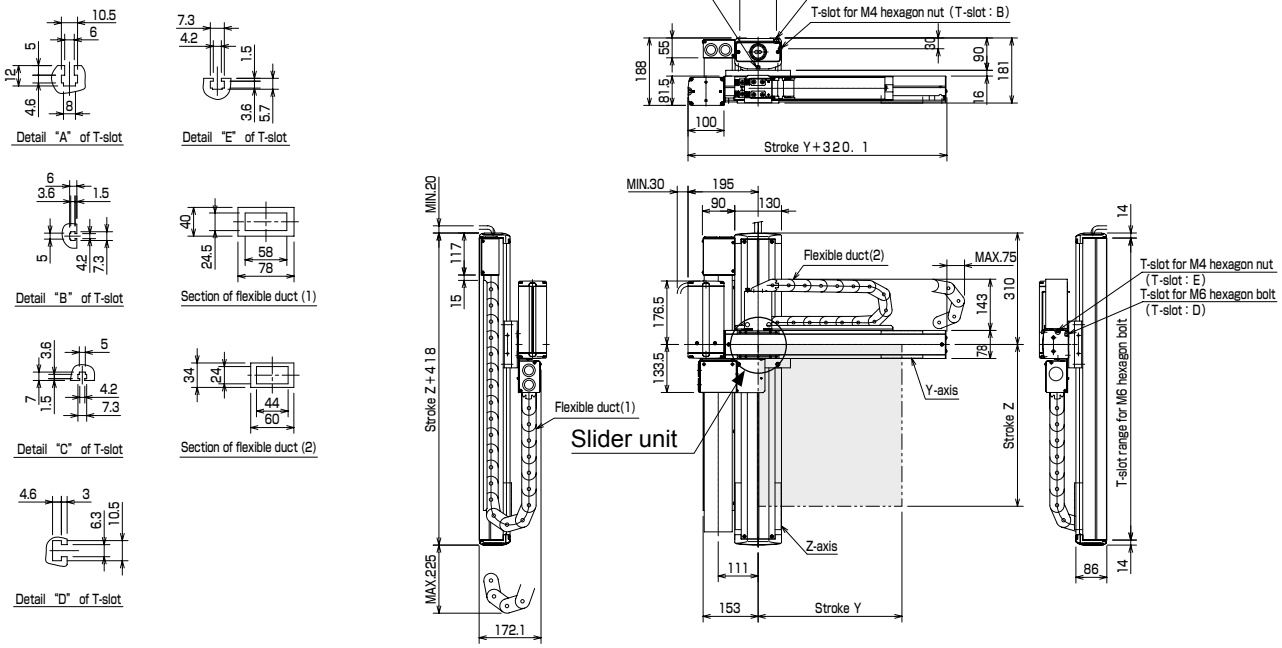

L: Left-handed

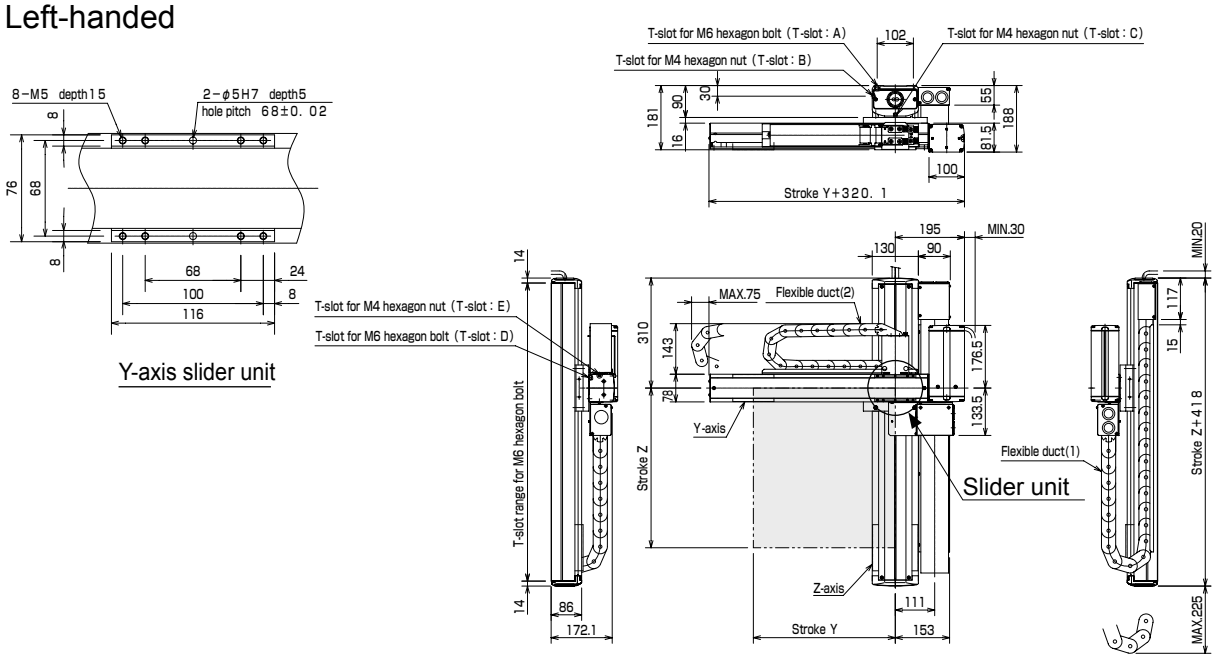

Example of Orthogonal Axes Combination: Z-Y Flexible duct spec

[Specifications]

	Z-axis	Y-axis
Axis type	KBB-30F-ST-M05B-□0	KBB-10E-B□-M21N-□0
Stroke (in increments of 100 mm)	100 to 1000mm	100 to 900mm
Max. speed	300mm/s (Note 1)	1000mm/s
Positioning repeatability	±0.01mm	±0.05mm
Lead	5mm	21mm (ball screw lead)
Motor output	200W, with brake	100W
Resolution	0.01mm	

Acceleration/deceleration time when the maximum speed is set: 0.36 sec. or over

Timing belt type

Z-axis: Ball screw driven
Motor straight
Y-axis: Timing belt driven
Side mounted motor

Note 1: When the stroke is as given below, the maximum speed differs.

	Stroke (mm)	Max. speed (mm/s)
Z-axis	700	250
	800	200
	900 to 1000	150

Max. load capacity (kg) (Note 2)	Z-axis stroke								
	100mm	200mm	300mm	400mm	500mm	600mm	700mm	800mm	900mm
	15.0	15.0	15.0	12.0	9.0	7.0	5.0	3.0	1.0

Note 2: Load capacity when a regenerative discharge unit (ABSU-2000) is used.

R: Right-handed

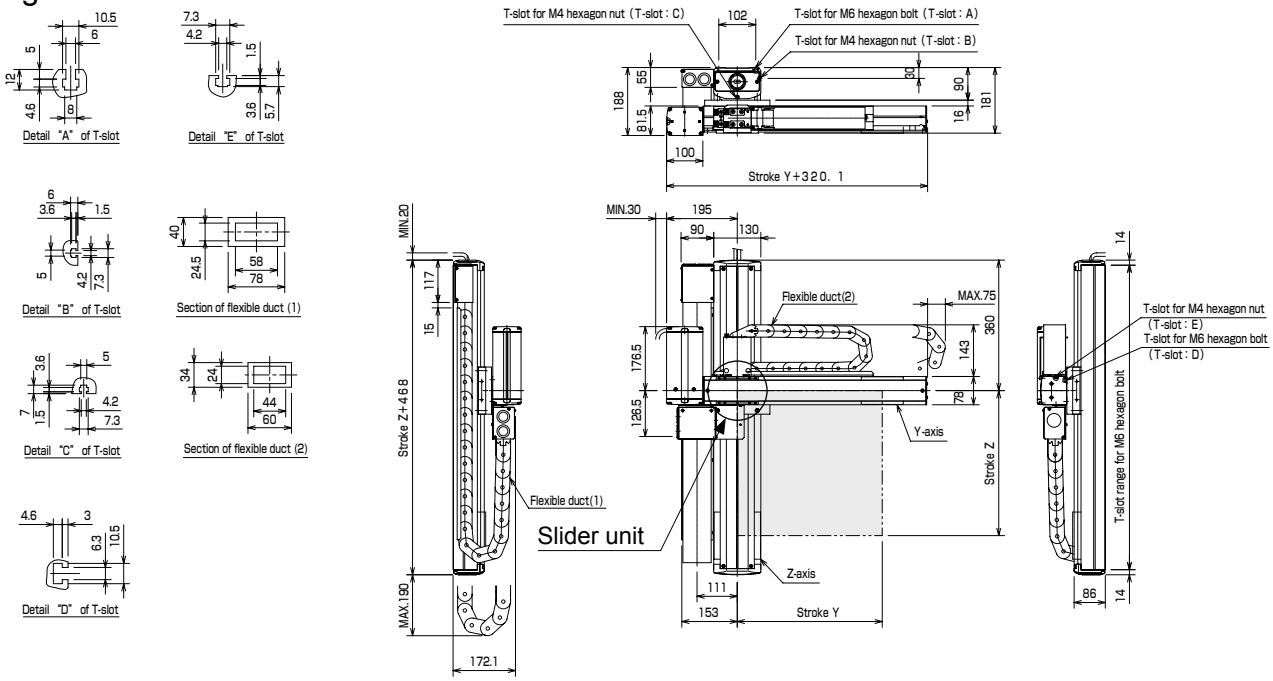

L: Left-handed

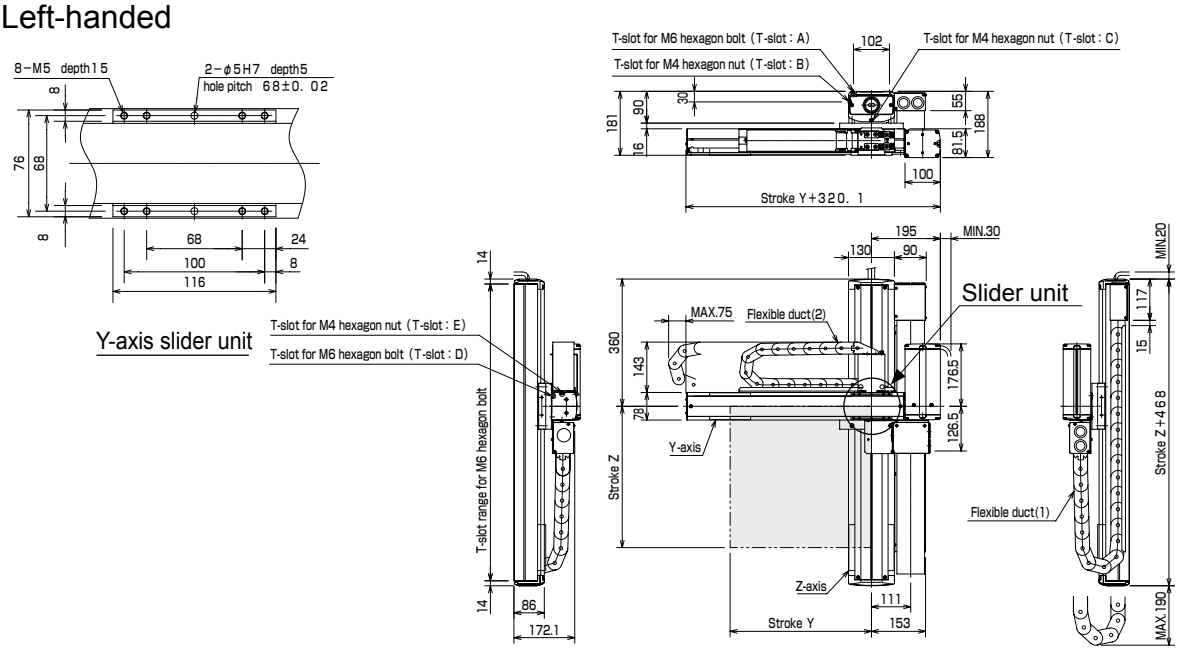

Discontinue

Example of Orthogonal Axes Combination: Z-Y Flexible duct spec

[Specifications]

	Z-axis	Y-axis
Axis type	KBB-30F-ST-M05B-□0	KBB-10F-B□-M21N-□0
Stroke (in increments of 100 mm)	100 to 1000mm	100 to 900mm
Max. speed	300mm/s (Note 1)	1000mm/s
Positioning repeatability	±0.01mm	±0.05mm
Lead	5mm	21mm (ball screw lead)
Motor output	200W, with brake	200W
Resolution	0.01mm	

Acceleration/deceleration time when the maximum speed is set: 0.36 sec. or over

Timing belt type

Z-axis: Ball screw driven
Motor straight
Y-axis: Timing belt driven
Side mounted motor

Note 1: When the stroke is as given below, the maximum speed differs.

	Stroke (mm)	Max. speed (mm/s)
Z-axis	700	250
	800	200
	900 to 1000	150

Max. load capacity (kg) (Note 2)	Z-axis stroke								
	100mm	200mm	300mm	400mm	500mm	600mm	700mm	800mm	900mm
	20.0	19.0	15.0	12.0	9.0	7.0	5.0	3.0	1.0

Note 2: Load capacity when a regenerative discharge unit (ABSU-2000) is used.

R: Right-handed

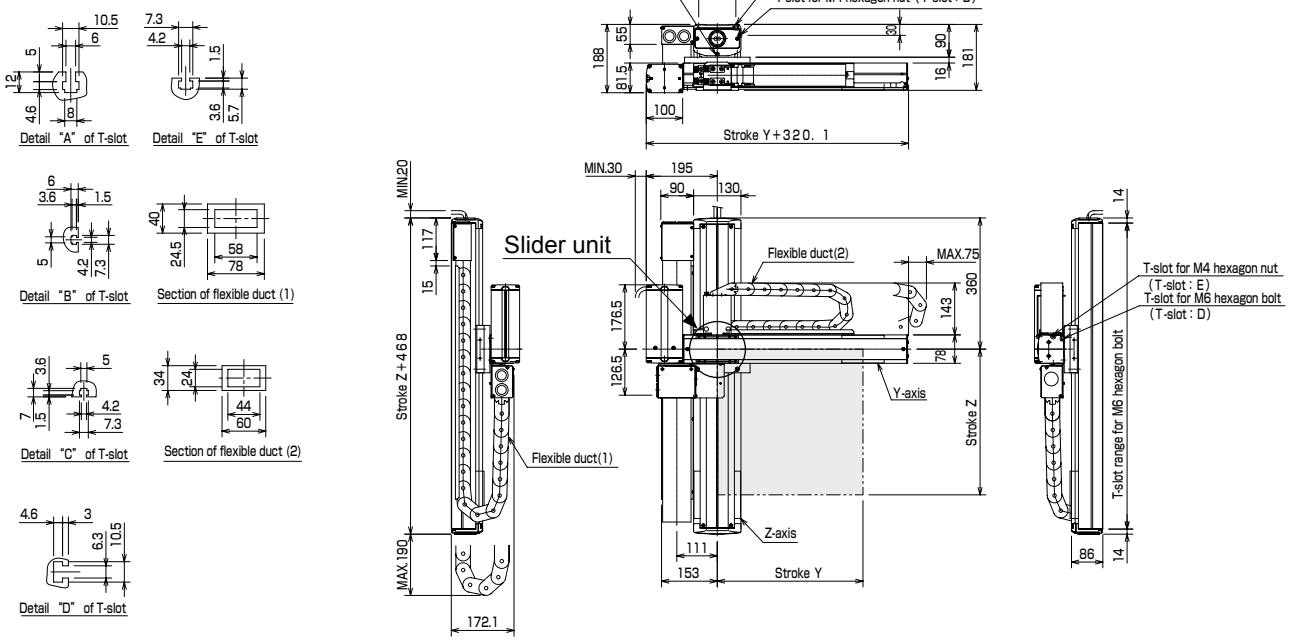

L: Left-handed

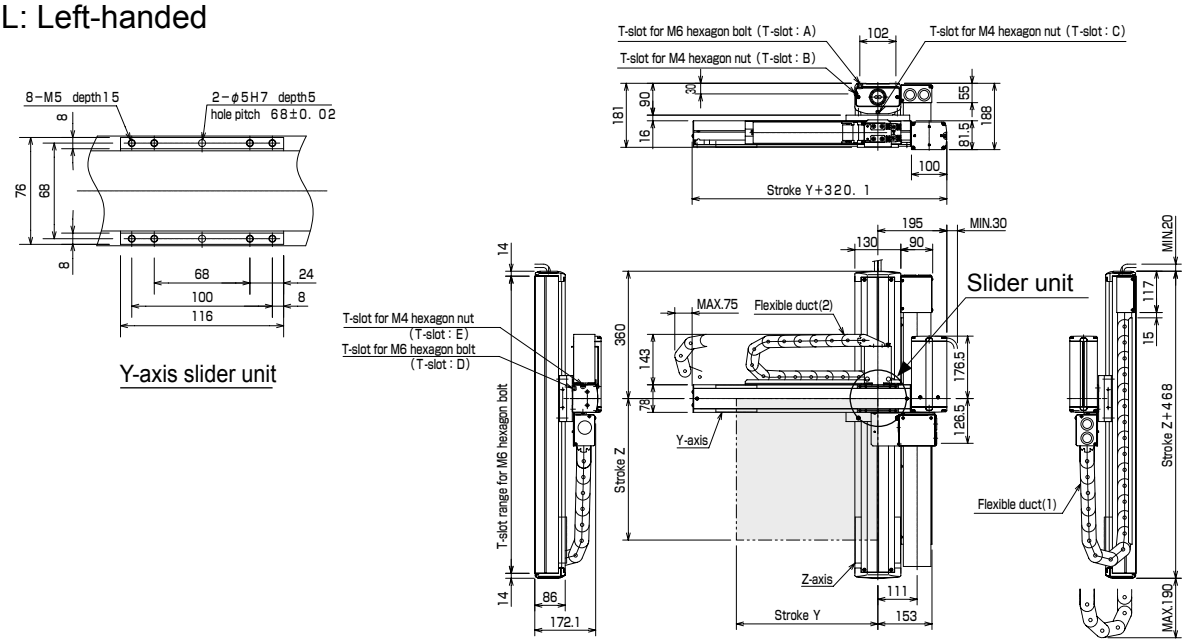

Example of Orthogonal Axes Combination: Z-Y Flexible duct spec

[Specifications]

	Z-axis	Y-axis
Axis type	KBB-50F-ST-M05B-□0	KBB-30E-B□-M21N-□0
Stroke (in increments of 100 mm)	200 to 1500mm	100 to 1000mm
Max. speed	300mm/s (Note 1)	1000mm/s
Positioning repeatability	±0.01mm	±0.05mm
Lead	5mm	21mm (ball screw lead)
Motor output	200W, with brake	100W
Resolution	0.01mm	

Acceleration/deceleration time when the maximum speed is set: 0.36 sec. or over

Timing belt type

Z-axis: Ball screw driven
Motor straight
Y-axis: Timing belt driven
Side mounted motor

Note 1: When the stroke is as given below, the maximum speed differs.

	Stroke (mm)	Max. speed (mm/s)
Z-axis	700 to 800	280
	900 to 1000	250
	1100 to 1200	180
	1300	130
	1400	100
	1500	80

Max. load capacity (kg) (Note 2)	Y-axis stroke									
	100mm	200mm	300mm	400mm	500mm	600mm	700mm	800mm	900mm	1000mm
	15.0	15.0	15.0	15.0	15.0	15.0	15.0	14.0	11.0	7.0

Note 2: Load capacity when a regenerative discharge unit (ABSU-2000) is used.

R: Right-handed

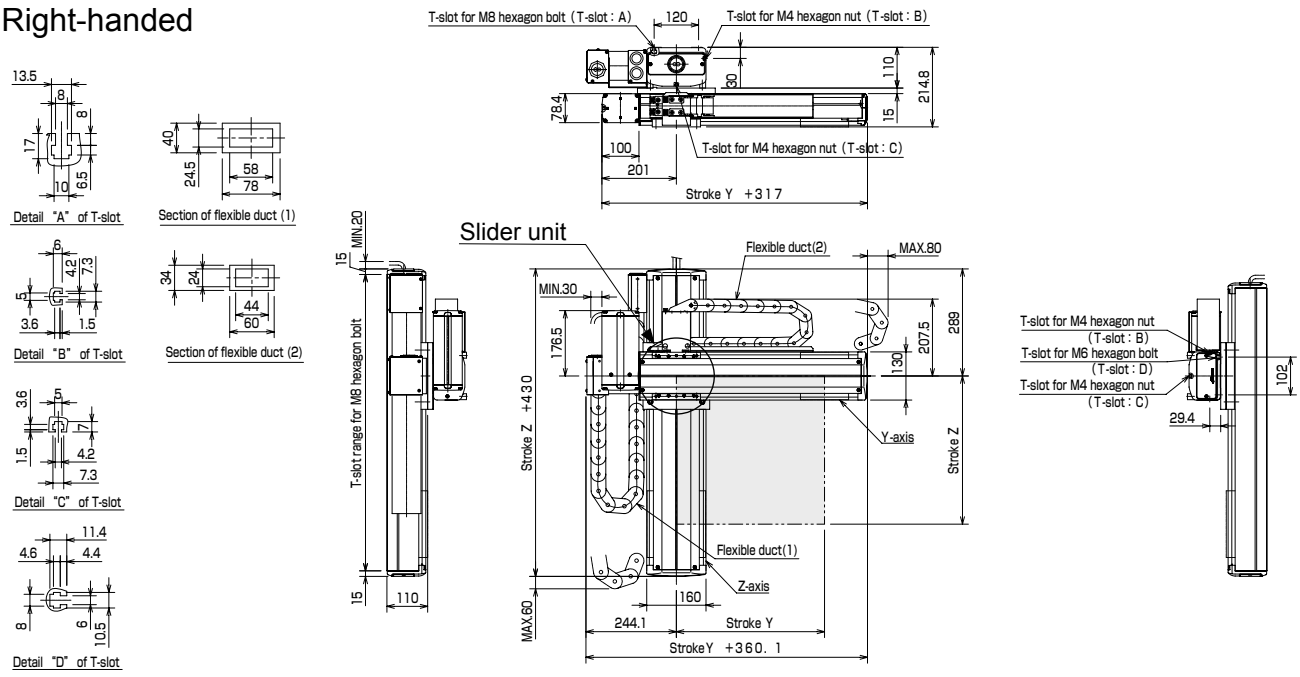

L: Left-handed

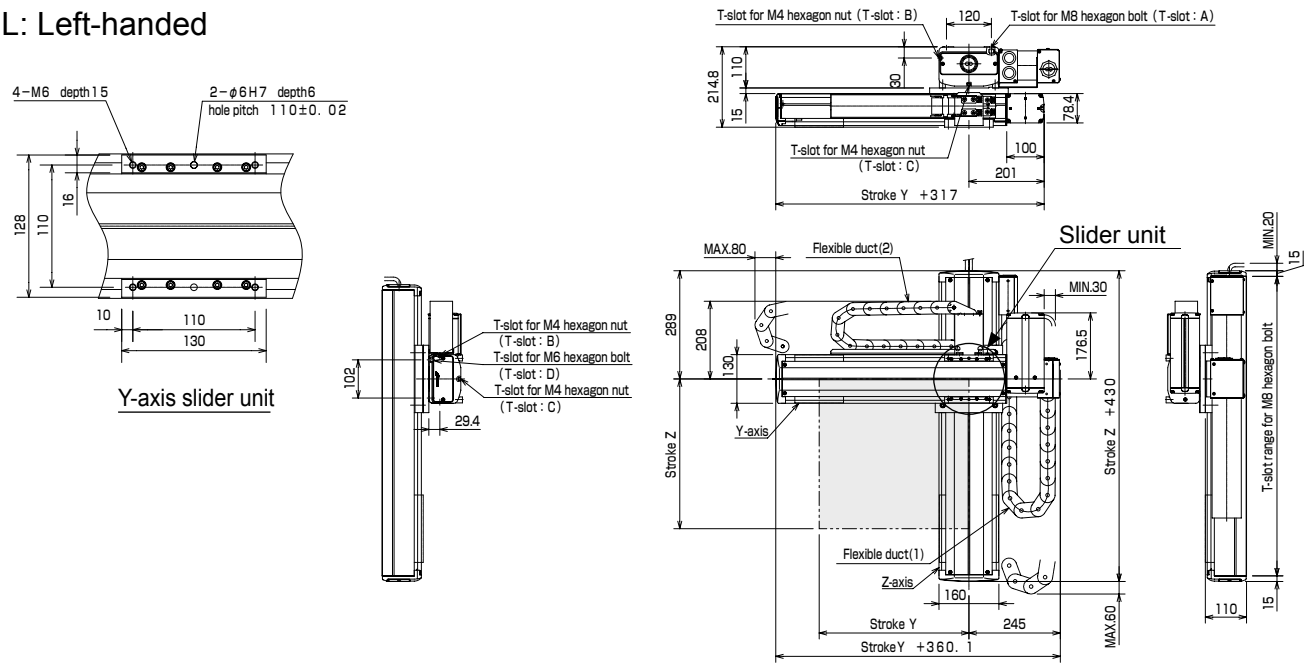

Discontinue

Example of Orthogonal Axes Combination: Z-Y Flexible duct spec

[Specifications]

	Z-axis	Y-axis
Axis type	KBB-50F-ST-M05B-□0	KBB-30F-B□-M21N-□0
Stroke (in increments of 100 mm)	200 to 1500mm	100 to 1000mm
Max. speed	300mm/s (Note 1)	1000mm/s
Positioning repeatability	±0.01mm	±0.05mm
Lead	5mm	21mm (ball screw lead)
Motor output	200W, with brake	200W
Resolution	0.01mm	

Acceleration/deceleration time when the maximum speed is set: 0.36 sec. or over

Timing belt type

Z-axis: Ball screw driven
Motor straight
Y-axis: Timing belt driven
Side mounted motor

Note 1: When the stroke is as given below, the maximum speed differs.

	Stroke (mm)	Max. speed (mm/s)
Z-axis	700 to 800	280
	900 to 1000	250
	1100 to 1200	180
	1300	130
	1400	100
	1500	80

Max. load capacity (kg) (Note 2)	Y-axis stroke									
	100mm	200mm	300mm	400mm	500mm	600mm	700mm	800mm	900mm	1000mm
	37.0	36.0	35.0	34.0	29.0	23.0	18.0	14.0	11.0	7.0

Note 2: Load capacity when a regenerative discharge unit (ABSU-2000) is used.

R: Right-handed

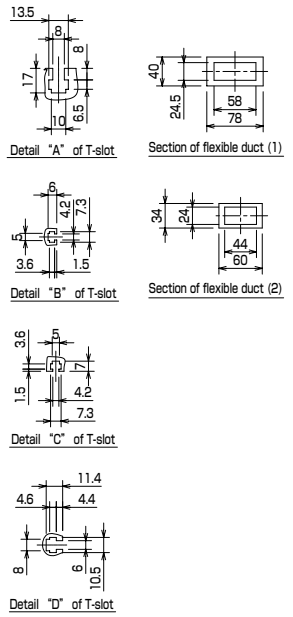

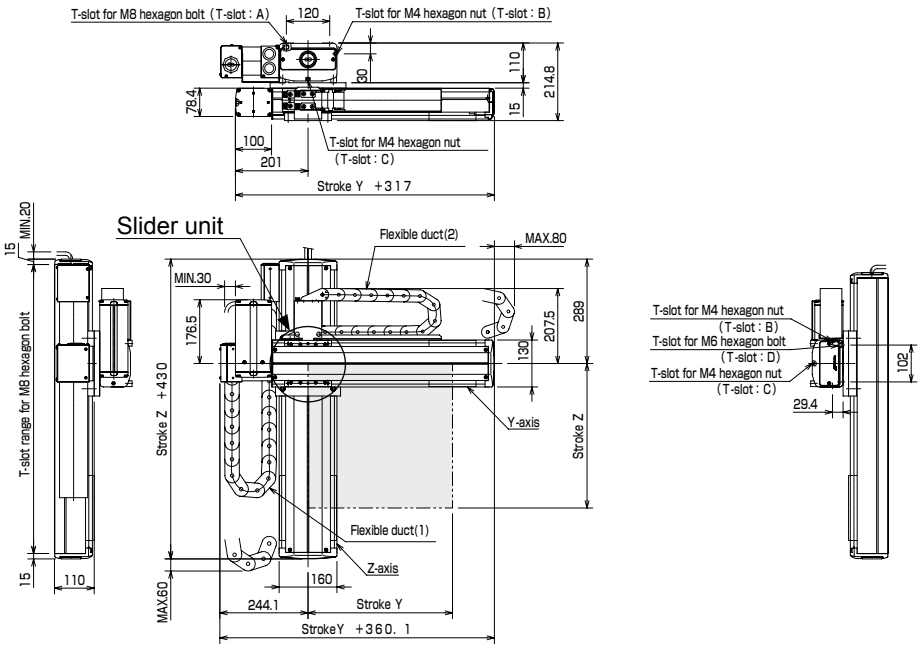

L: Left-handed

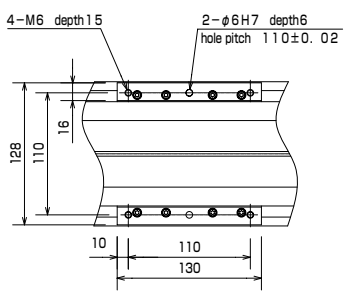

Y-axis slider unit

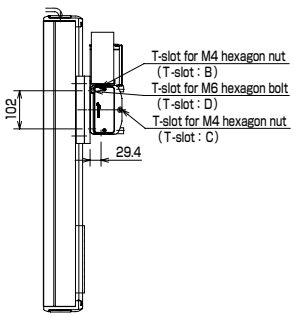

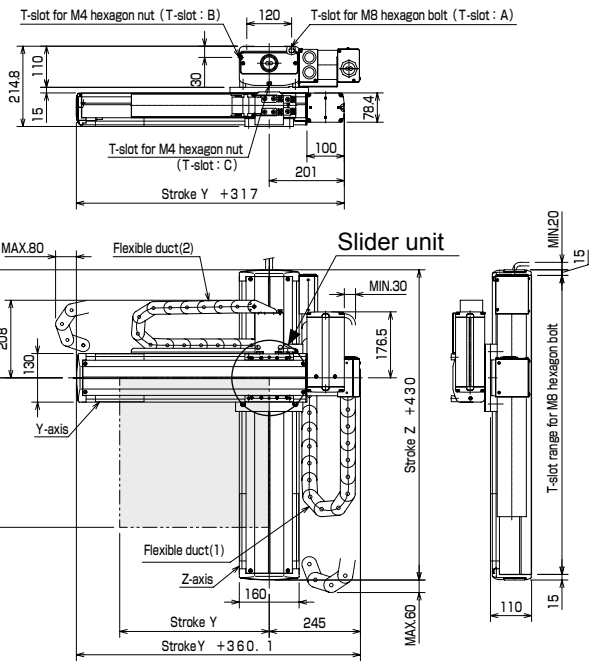

Example of Orthogonal Axes Combination: X-Y-Z Flexible duct spec

[Specifications]

	X-axis	Y-axis	Z-axis
Axis type	KBB-10E-ST-S20N-□5	KBB-07D-ST-M12N-□□	KBB-05D-ST-M12B-□□
Stroke (in increments of 100 mm for X-axis, 50 mm for Y, Z-axis)	150 to 1050mm	50 to 300mm	50 to 300mm
Max. speed	1200mm/s (Note 1)	800mm/s	800mm/s
Positioning repeatability	±0.01mm	±0.02mm	±0.02mm
Lead	20mm	12mm	12mm
Motor output	100W	50W	50W, with brake
Resolution	0.01mm		

Acceleration/deceleration time when the maximum speed is set: 0.36 sec. or over

Ball screw type

X-axis: Ball screw driven
Motor straight
Y-axis: Ball screw driven
Motor straight
Z-axis: Ball screw driven
Motor straight

Note 1: When the stroke is as given below, the maximum speed differs.

	Stroke (mm)	Max. speed (mm/s)
X-axis	750	1000
	850	800
	950 to 1050	600

Max. load capacity (kg)		Y-axis stroke					
		50mm	100mm	150mm	200mm	250mm	300mm
Z-axis stroke	50,100mm	3.0	3.0	3.0	3.0	1.2	1.2
	150,200mm	3.0	3.0	3.0	3.0	1.0	1.0
	250,300mm	3.0	3.0	3.0	3.0	0.8	0.8

R: Right-handed

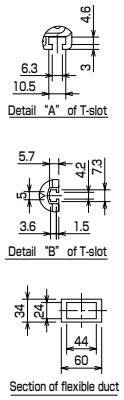

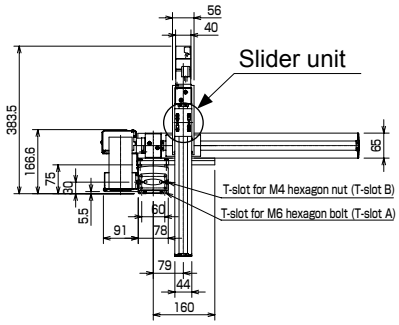

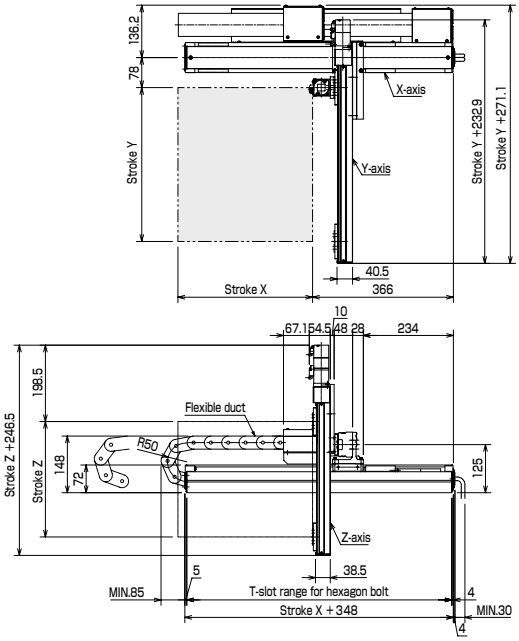

L: Left-handed

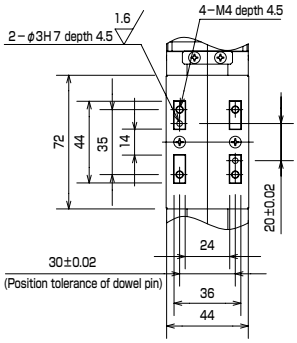

Z-axis slider unit

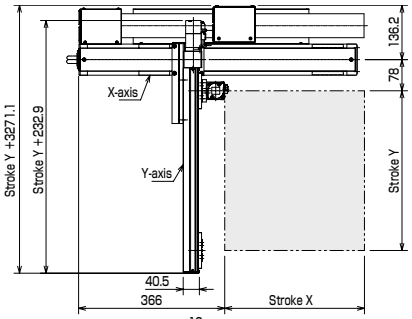

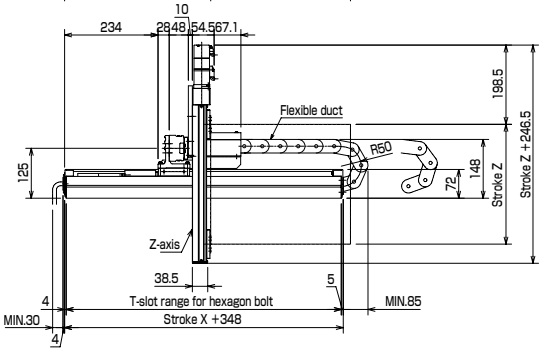

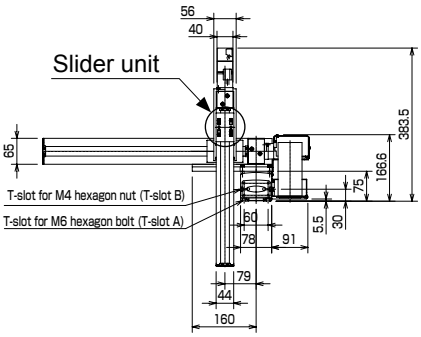

Discontinue

Example of Orthogonal Axes Combination: X-Y-Z Flexible duct spec Space-saving type

[Specifications]

	X-axis	Y-axis	Z-axis
Axis type	KBB-10E-U□-S20N-□5	KBB-07D-ST-M12N-□□	KBB-05D-ST-M12B-□□
Stroke (in increments of 100 mm for X-axis, 50 mm for Y, Z-axis)	150 to 1050mm	50 to 450mm	50 to 300mm
Max. speed	1200mm/s (Note 1)	800mm/s	800mm/s
Positioning repeatability	±0.01mm	±0.02mm	±0.02mm
Lead	20mm	12mm	12mm
Motor output	100W	50W	50W, with brake
Resolution	0.01mm		

Acceleration/deceleration time when the maximum speed is set: 0.36 sec. or over

Ball screw type

X-axis: Ball screw driven
Motor straight
Y-axis: Ball screw driven
Motor straight
Z-axis: Ball screw driven
Motor straight

Note 1: When the stroke is as given below, the maximum speed differs.

	Stroke (mm)	Max. speed (mm/s)
X-axis	750	1000
	850	800
	950 to 1050	600

Max. load capacity (kg)		Y-axis stroke					
		50mm	100mm	150mm	200mm	250mm	300mm
Z-axis stroke	50,100mm	3.0	3.0	3.0	3.0	1.2	1.2
	150,200mm	3.0	3.0	3.0	3.0	1.0	1.0
	250,300mm	3.0	3.0	3.0	3.0	0.8	0.8

R: Right-handed

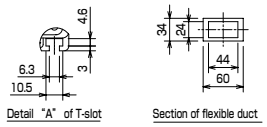

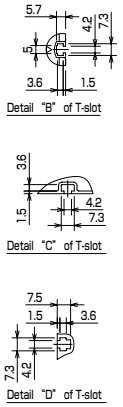

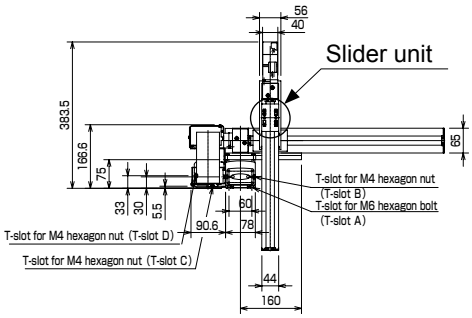

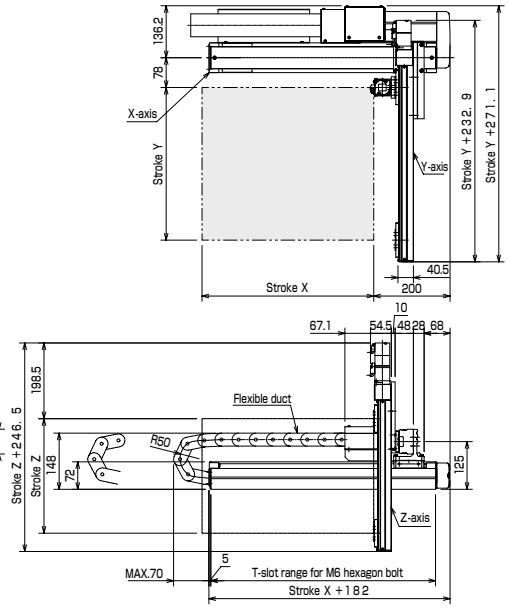

L: Left-handed

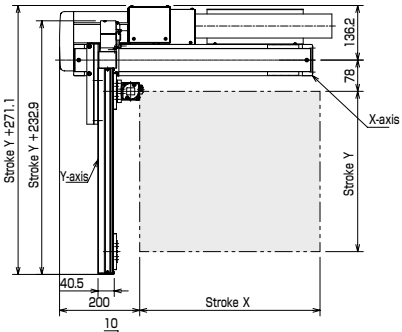

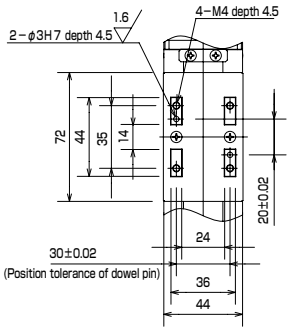

Z-axis slider unit

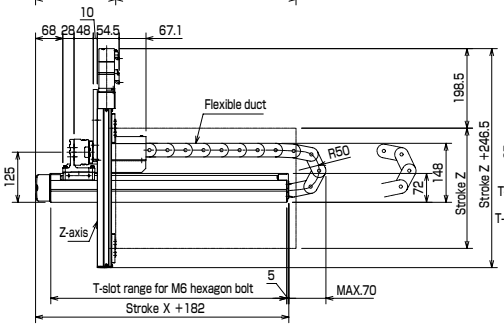

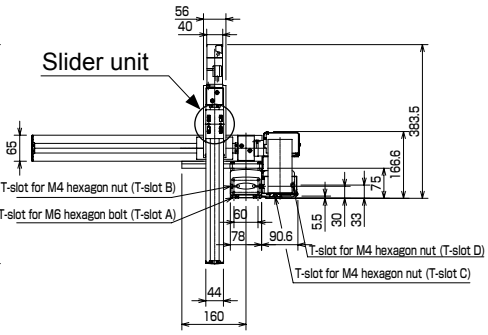

Example of Orthogonal Axes Combination: X-Y-Z Flexible duct spec

[Specifications]

	X-axis	Y-axis	Z-axis
Axis type	KBB-10E-ST-M20N-□0	KBB-10E-ST-S20N-□5	KBB-07D-ST-M12B-□□
Stroke (in increments of 100 mm for X, Y-axis, 50 mm for Z-axis)	100 to 1000mm	150 to 450mm	50 to 300mm
Max. speed	1200mm/s (Note 1)	1200mm/s	800mm/s
Positioning repeatability	±0.01mm	±0.01mm	±0.02mm
Lead	20mm	20mm	12mm
Motor output	100W	100W	50W, with brake
Resolution	0.01mm		

Acceleration/deceleration time when the maximum speed is set: 0.36 sec. or over

Ball screw type

X-axis: Ball screw driven
Motor straight
Y-axis: Ball screw driven
Motor straight
Z-axis: Ball screw driven
Motor straight

Note 1: When the stroke is as given below, the maximum speed differs.

	Stroke (mm)	Max. speed (mm/s)
X-axis	700	1000
	800	800
	900 to 1000	600

Max. load capacity (kg)		Y-axis stroke			
		150mm	250mm	350mm	450mm
Z-axis stroke	50,100mm	4.0	4.0	3.0	1.5
	150,200mm	4.0	3.0	2.6	1.1
	250,300mm	4.0	3.0	2.0	0.7

R: Right-handed

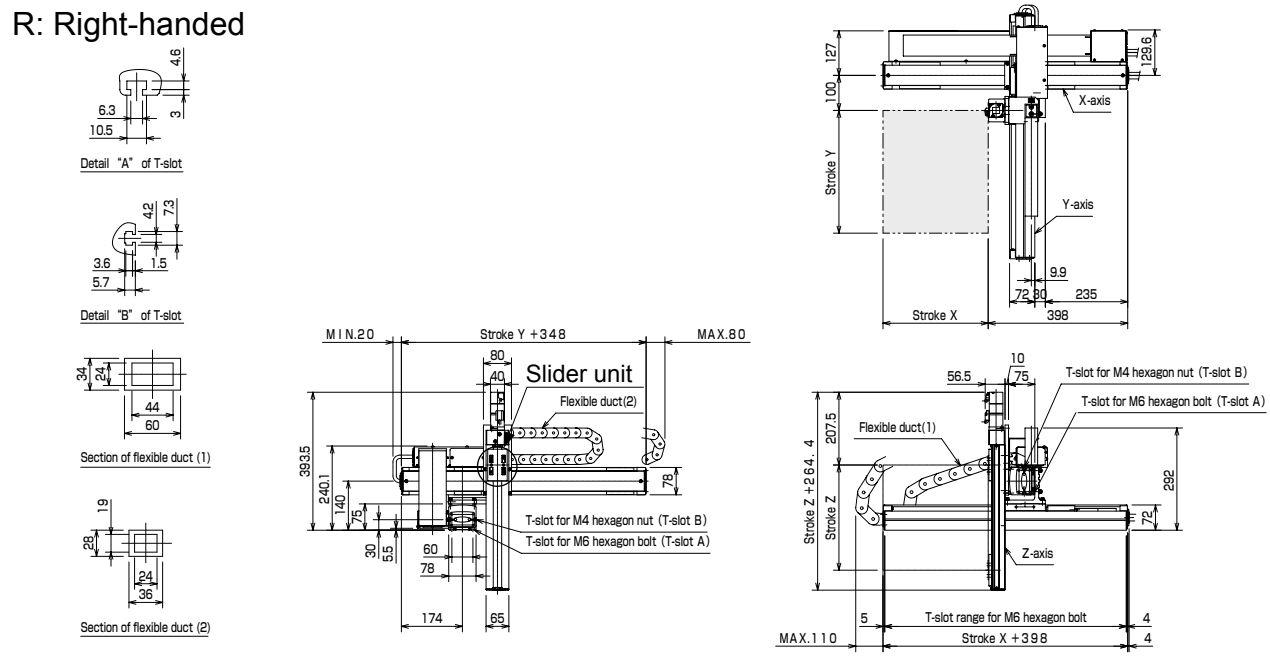

L: Left-handed

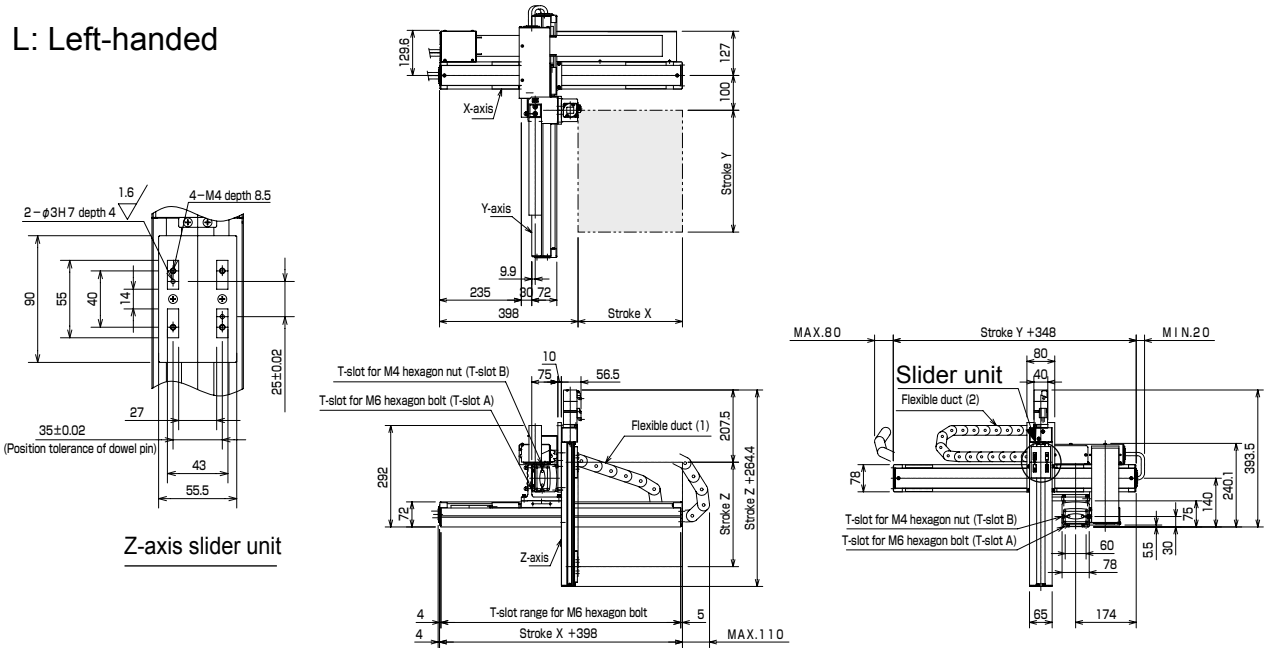

Discontinue

Example of Orthogonal Axes Combination: X-Y-Z Flexible duct spec Space-saving type

[Specifications]

	X-axis	Y-axis	Z-axis
Axis type	KBB-10E-U□-M20N-□0	KBB-10E-U□-S20N-□5	KBB-07D-ST-M12B-□□
Stroke (in increments of 100 mm for X, Y-axis, 50 mm for Z-axis)	100 to 1000mm	150 to 450mm	50 to 300mm
Max. speed	1200mm/s (Note 1)	1200mm/s	800mm/s
Positioning repeatability	±0.01mm	±0.01mm	±0.02mm
Lead	20mm	20mm	12mm
Motor output	100W	100W	50W, with brake
Resolution	0.01mm		

Acceleration/deceleration time when the maximum speed is set: 0.36 sec. or over

Ball screw type

X-axis: Ball screw driven
Side mounted motor
Y-axis: Ball screw driven
Side mounted motor
Z-axis: Ball screw driven
Motor straight

Note 1: When the stroke is as given below, the maximum speed differs.

	Stroke (mm)	Max. speed (mm/s)
X-axis	700	1000
	800	800
	900 to 1000	600

Max. load capacity (kg)		Y-axis stroke			
		150mm	250mm	350mm	450mm
Z-axis stroke	50,100mm	4.0	4.0	3.0	1.5
	150,200mm	4.0	3.0	2.6	1.1
	250,300mm	4.0	3.0	2.0	0.7

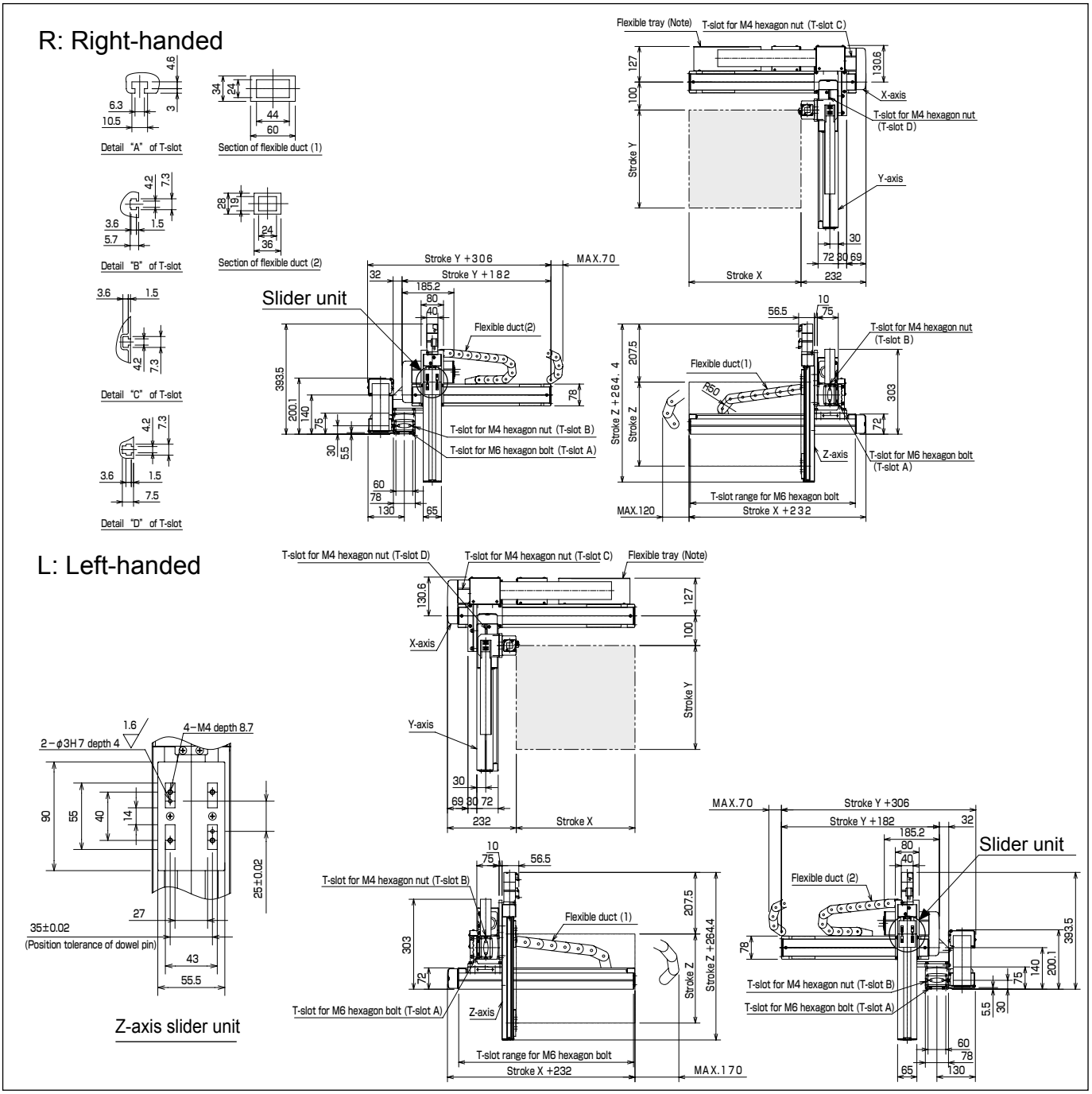

Example of Orthogonal Axes Combination: X-Y-Z Flexible duct spec

[Specifications]

	X-axis	Y-axis	Z-axis
Axis type	KBB-30E-ST-M20N-□5	KBB-10E-ST-S20N-□5	KBB-07D-ST-M12B-□□
Stroke (in increments of 100 mm for X, Y-axis, 50 mm for Z-axis)	150 to 1050mm	150 to 650mm	50 to 300mm
Max. speed	1200mm/s (Note 1)	1200mm/s	800mm/s
Positioning repeatability	±0.01mm	±0.01mm	±0.02mm
Lead	20mm	20mm	12mm
Motor output	200W	100W	100W, with brake
Resolution	0.01mm		

Acceleration/deceleration time when the maximum speed is set: 0.48 sec. or over

Ball screw type

X-axis: Ball screw driven
Motor straight
Y-axis: Ball screw driven
Motor straight
Z-axis: Ball screw driven
Motor straight

Note 1: When the stroke is as given below, the maximum speed differs.

	Stroke (mm)	Max. speed (mm/s)
X-axis	750	1000
	850	800
	950 to 1050	600

Max. load capacity (kg)		Y-axis stroke					
		150mm	250mm	350mm	450mm	550mm	650mm
Z-axis stroke	50,100mm	4.0	4.0	4.0	4.0	4.0	3.5
	150,200mm	4.0	4.0	4.0	4.0	4.0	3.1
	250,300mm	4.0	4.0	4.0	4.0	3.7	2.7

R: Right-handed

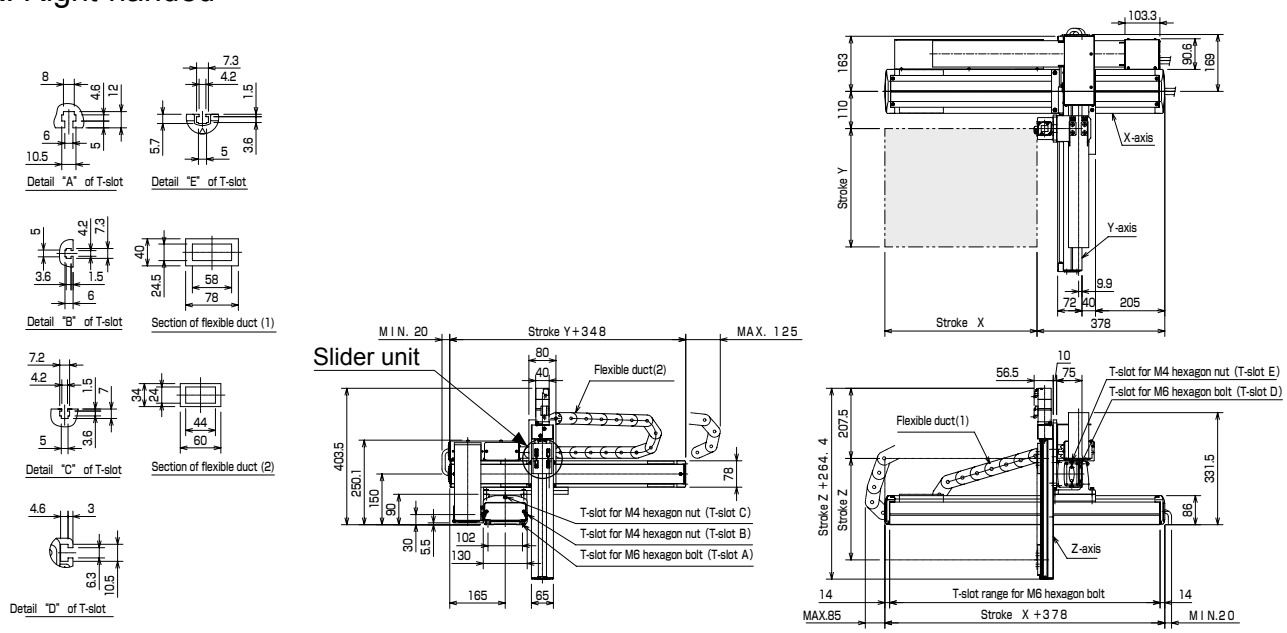

L: Left-handed

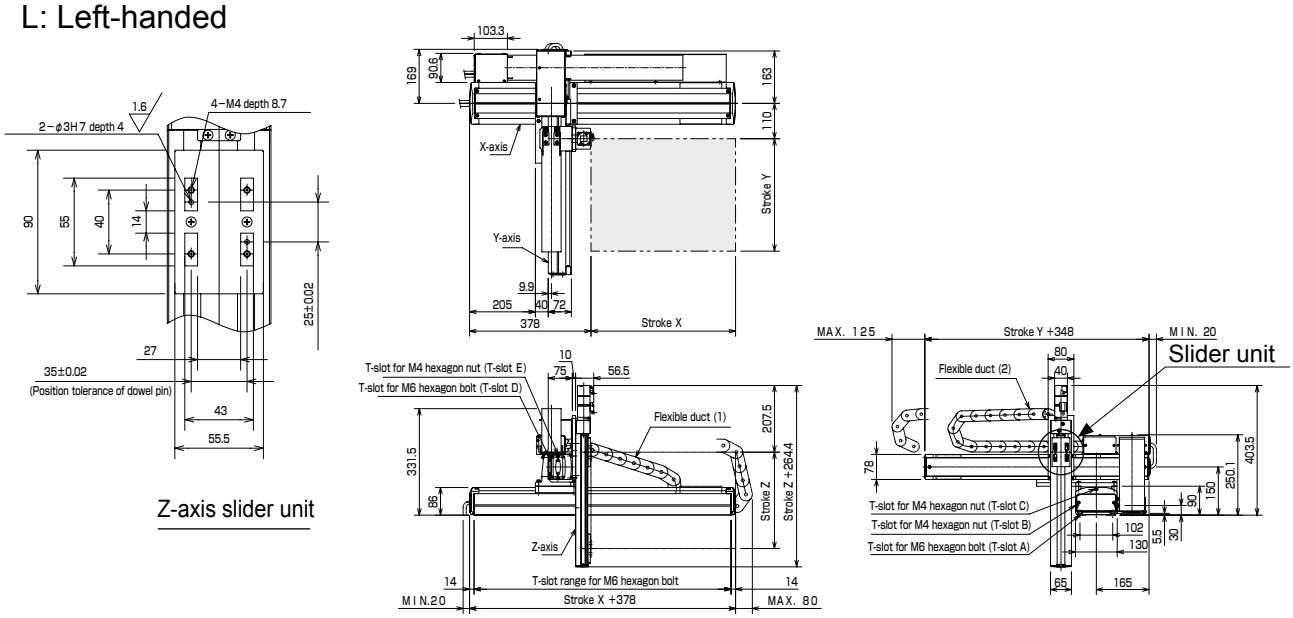

Discontinue

Example of Orthogonal Axes Combination: X-Y-Z Flexible duct spec Space-saving type

[Specifications]

	X-axis	Y-axis	Z-axis
Axis type	KBB-30E-U□-M20N-□0	KBB-10E-U□-S20N-□5	KBB-07D-ST-M12B-□□
Stroke (in increments of 100 mm for X, Y-axis, 50 mm for Z-axis)	100 to 1000mm	150 to 650mm	50 to 300mm
Max. speed	1200mm/s (Note 1)	1200mm/s	800mm/s
Positioning repeatability	±0.01mm	±0.01mm	±0.02mm
Lead	20mm	20mm	12mm
Motor output	100W	100W	50W, with brake
Resolution	0.01mm		

Acceleration/deceleration time when the maximum speed is set: 0.48 sec. or over

Ball screw type

X-axis: Ball screw driven Side mounted motor
Y-axis: Ball screw driven Side mounted motor
Z-axis: Ball screw driven Motor straight

Note 1: When the stroke is as given below, the maximum speed differs.

	Stroke (mm)	Max. speed (mm/s)
X-axis	700	1000
	800	800
	900 to 1000	600

Max. load capacity (kg)		Y-axis stroke					
		150mm	250mm	350mm	450mm	550mm	650mm
Z-axis stroke	50,100mm	4.0	4.0	4.0	4.0	4.0	3.5
	150,200mm	4.0	4.0	4.0	4.0	4.0	3.1
	250,300mm	4.0	4.0	4.0	4.0	3.7	2.7

R: Right-handed

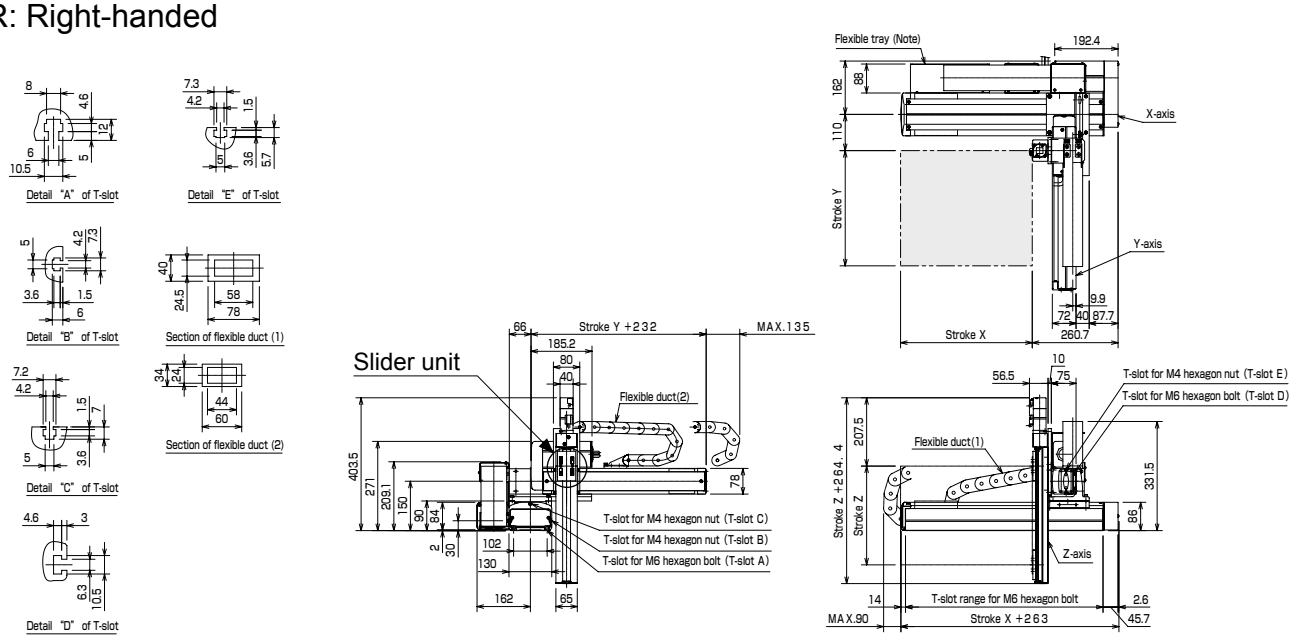

L: Left-handed

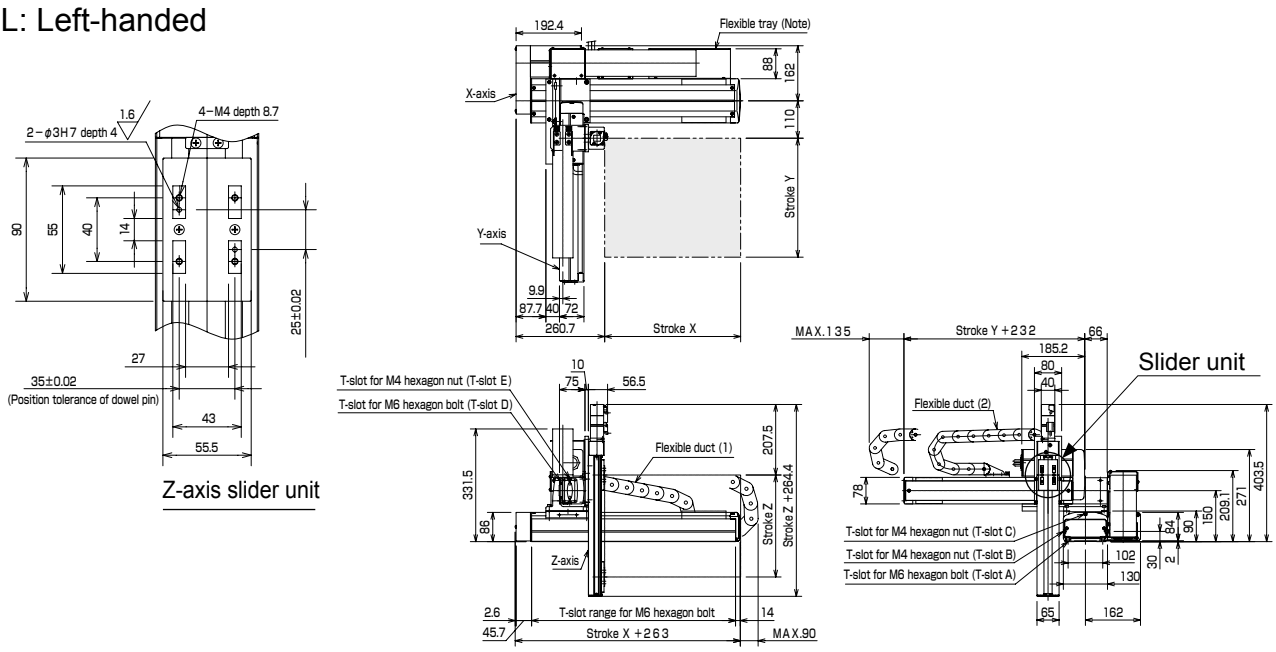

Example of Orthogonal Axes Combination: X-Y-Z Flexible duct spec

[Specifications]

	X-axis	Y-axis	Z-axis
Axis type	KBB-30F-ST-M20N-□0	KBB-10E-ST-S20N-□5	KBB-07D-ST-M12B-□□
Stroke (in increments of 100 mm for X, Y-axis, 50 mm for Z-axis)	100 to 1000mm	150 to 850mm	50 to 300mm
Max. speed	1200mm/s (Note 1)	1200mm/s	800mm/s
Positioning repeatability	±0.01mm	±0.01mm	±0.02mm
Lead	20mm	20mm	12mm
Motor output	200W	100W	50W, with brake
Resolution	0.01mm		

Acceleration/deceleration time when the maximum speed is set: 0.36 sec. or over

Ball screw type

X-axis: Ball screw driven
Motor straight
Y-axis: Ball screw driven
Motor straight
Z-axis: Ball screw driven
Motor straight

Note 1: When the stroke is as given below, the maximum speed differs.

	Stroke (mm)	Max. speed (mm/s)
X-axis	700	1000
	800	800
	900 to 1000	600
Y-axis	750	1000
	850	800

Max. load capacity (kg)		Y-axis stroke							
		150mm	250mm	350mm	450mm	550mm	650mm	750mm	850mm
Z-axis stroke	50,100mm	4.0	4.0	4.0	4.0	4.0	3.9	2.1	0.6
	150,200mm	4.0	4.0	4.0	4.0	4.0	3.6	1.8	0.3
	250,300mm	4.0	4.0	4.0	4.0	4.0	3.3	1.5	–

R: Right-handed

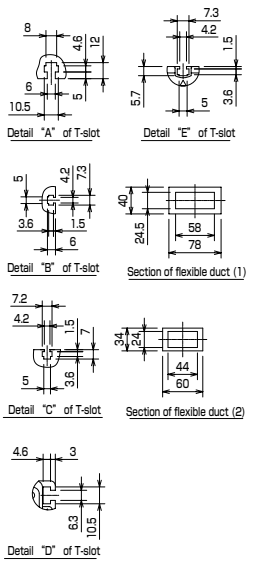

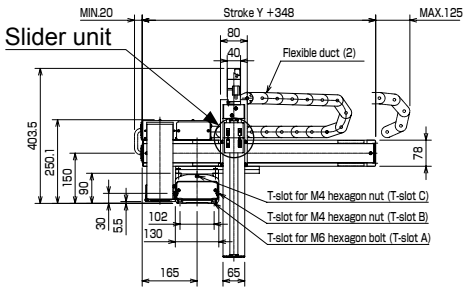

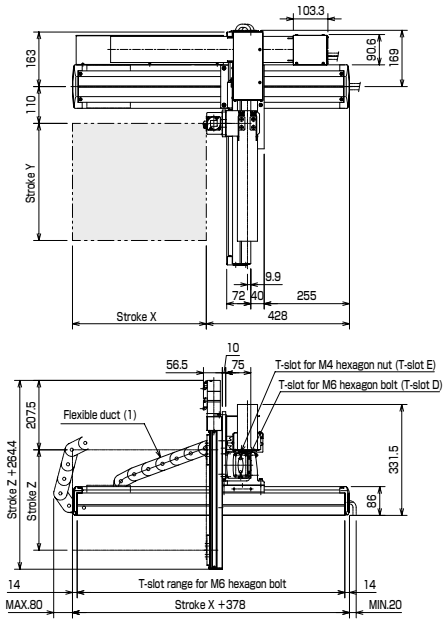

L: Left-handed

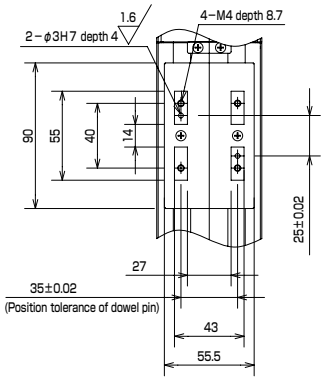

Z-axis slider unit

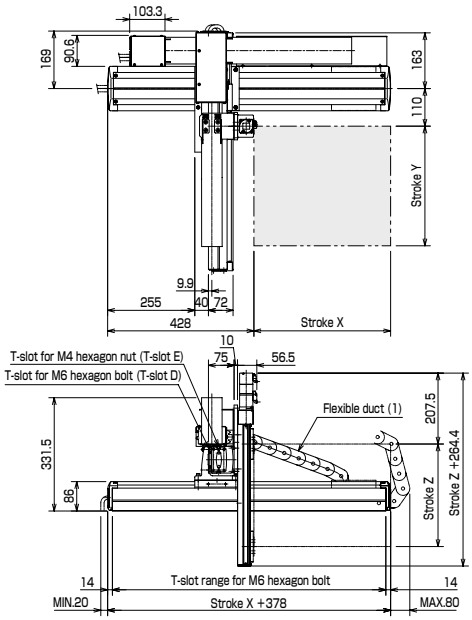

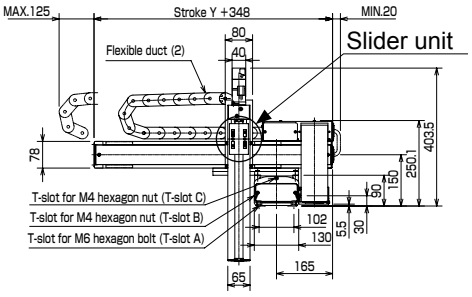

Discontinue

Example of Orthogonal Axes Combination: X-Y-Z Flexible duct spec Space-saving type

[Specifications]

	X-axis	Y-axis	Z-axis
Axis type	KBB-30E-U□-M20N-□0	KBB-10E-U□-S20N-□5	KBB-07D-ST-M12B-□□
Stroke (in increments of 100 mm for X, Y-axis, 50 mm for Z-axis)	100 to 1000mm	150 to 850mm	50 to 300mm
Max. speed	1200mm/s (Note 1)	1200mm/s	800mm/s
Positioning repeatability	±0.01mm	±0.01mm	±0.02mm
Lead	20mm	20mm	12mm
Motor output	100W	100W	50W, with brake
Resolution	0.01mm		

Acceleration/deceleration time when the maximum speed is set: 0.36 sec. or over

Ball screw type

X-axis: Ball screw driven Side mounted motor
Y-axis: Ball screw driven Side mounted motor
Z-axis: Ball screw driven Motor straight

Note 1: When the stroke is as given below, the maximum speed differs.

	Stroke (mm)	Max. speed (mm/s)
X-axis	700	1000
	800	800
	900 to 1000	600
Y-axis	750	1000
	850	800

Max. load capacity (kg)		Y-axis stroke							
		150mm	250mm	350mm	450mm	550mm	650mm	750mm	850mm
Z-axis stroke	50,100mm	4.0	4.0	4.0	4.0	4.0	3.9	2.1	0.6
	150,200mm	4.0	4.0	4.0	4.0	4.0	3.6	1.8	0.3
	250,300mm	4.0	4.0	4.0	4.0	4.0	3.3	1.5	–

R: Right-handed

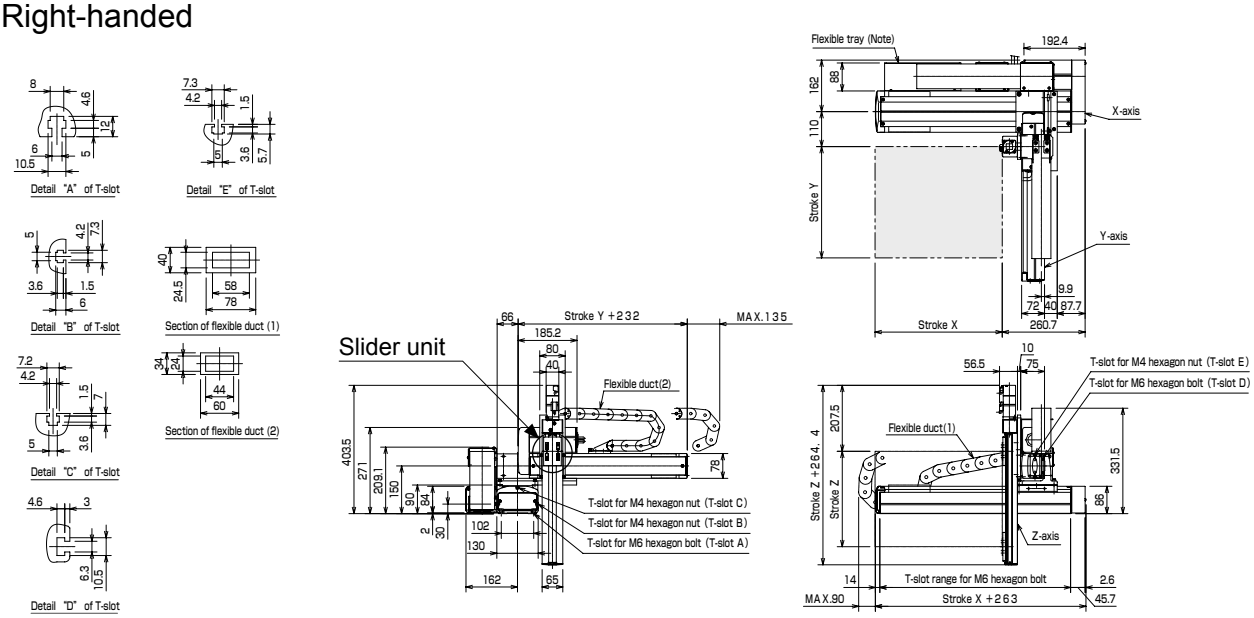

L: Left-handed

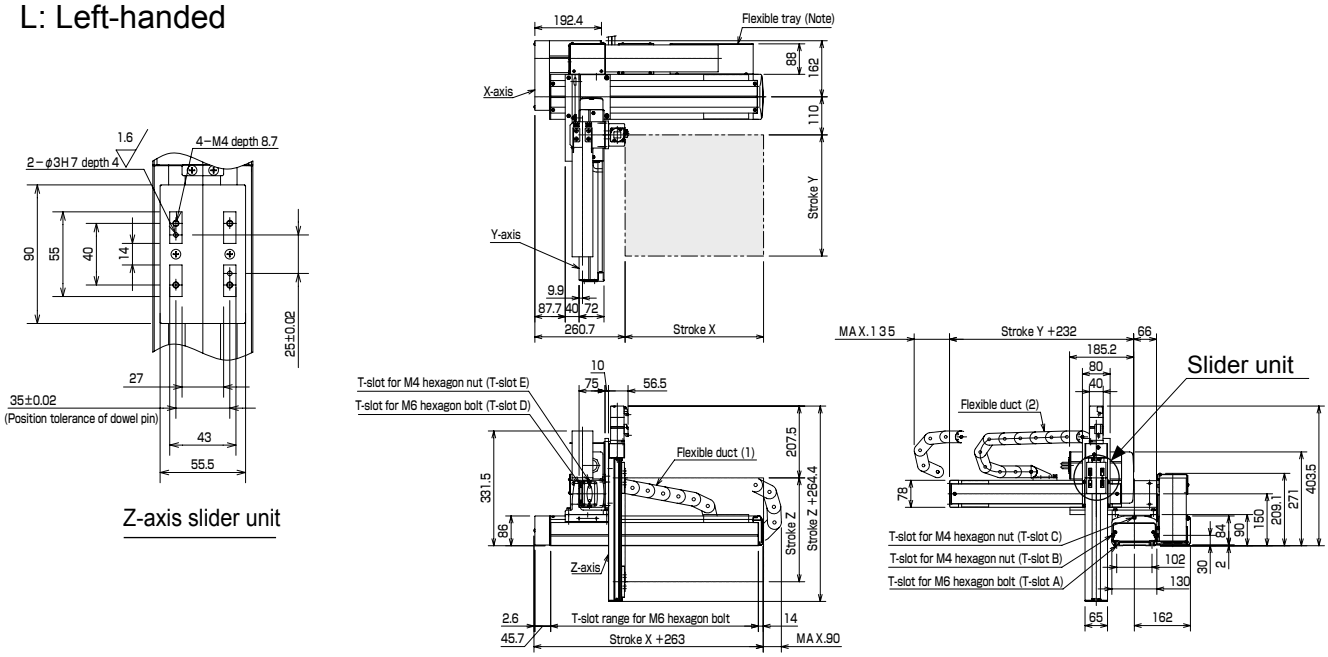

Example of Orthogonal Axes Combination: X-Y-Z Flexible duct spec

[Specifications]

	X-axis	Y-axis	Z-axis
Axis type	KBB-30E-ST-M20N-□5	KBB-10E-ST-M20N-□0	KBB-10E-U□-S10B-□5
Stroke	150 to 1050mm	100 to 500mm	150 to 350mm
Max. speed	1200mm/s (Note 1)	1200mm/s	300mm/s
Positioning repeatability	±0.01mm		
Lead	20mm	20mm	10mm
Motor output	100W	100W	100W, with brake
Resolution	0.01mm		

Acceleration/deceleration time when the maximum speed is set: 0.48 sec. or over

Ball screw type

X-axis: Ball screw driven
Motor straight
Y-axis: Ball screw driven
Motor straight
Z-axis: Ball screw driven
Side mounted motor

Note 1: When the stroke is as given below, the maximum speed differs.

	Stroke (mm)	Max. speed (mm/s)
X-axis	750	1000
	850	800
	950 to 1050	600

Max. load capacity (kg)		Y-axis stroke				
		100mm	200mm	300mm	400mm	500mm
Z-axis stroke	150mm	7.0	6.0	5.0	4.0	2.0
	250mm	6.0	5.0	4.0	4.0	2.0
	350mm	5.0	5.0	3.0	3.0	1.0

R: Right-handed

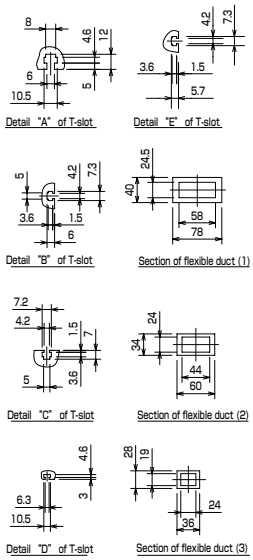

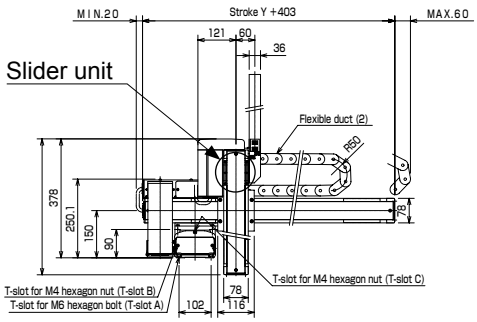

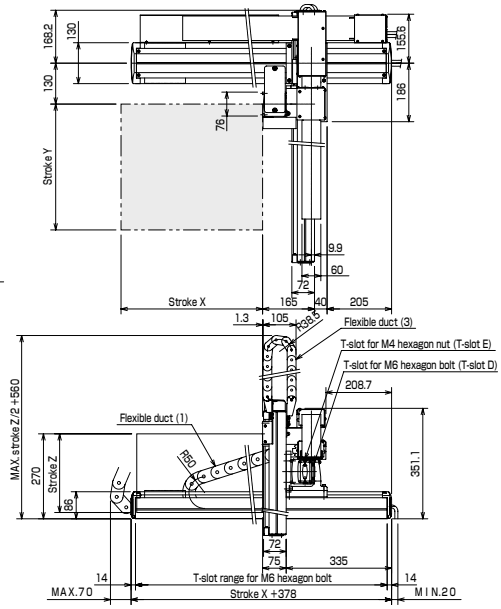

L: Left-handed

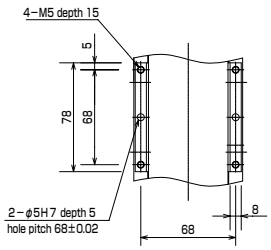

Z-axis slider unit

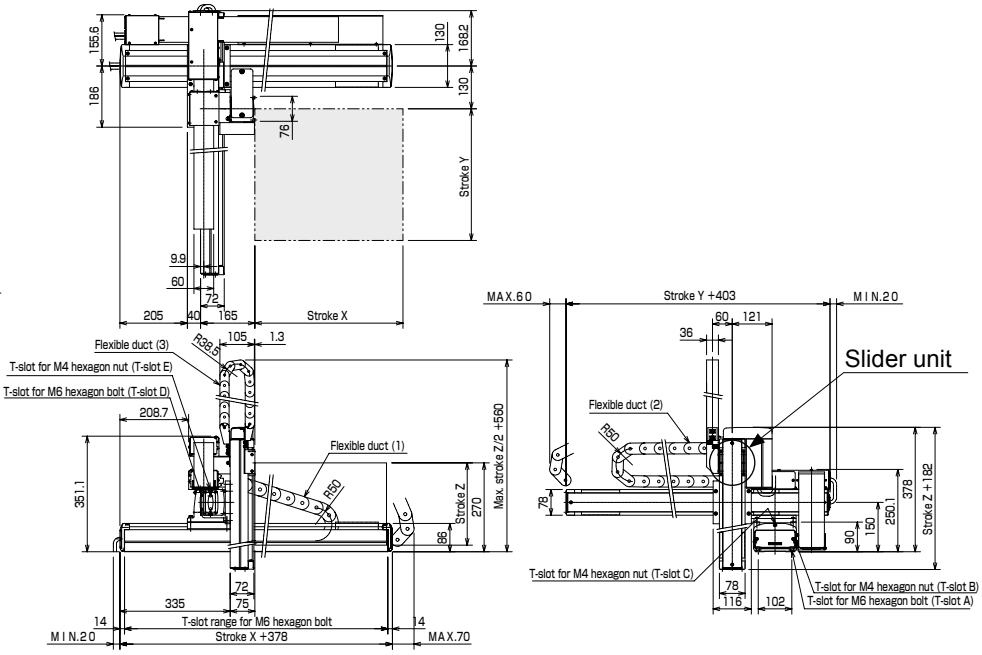

Discontinue

Example of Orthogonal Axes Combination: X-Y-Z Flexible tube spec

[Specifications]

	X-axis	Y-axis	Z-axis
Axis type	KBB-30E-ST-M20N-□5	KBB-10E-ST-M20N-□0	KBB-10E-U□-S10B-□5
Stroke	150 to 1050mm	100 to 500mm	150 to 350mm
Max. speed	1200mm/s (Note 1)	1200mm/s	600mm/s
Positioning repeatability	±0.01mm		
Lead	20mm	20mm	10mm
Motor output	100W	100W	100W, with brake
Resolution	0.01mm		

Acceleration/deceleration time when the maximum speed is set: 0.48 sec. or over

Ball screw type

X-axis: Ball screw driven
Motor straight
Y-axis: Ball screw driven
Motor straight
Z-axis: Ball screw driven
Side mounted motor

Note 1: When the stroke is as given below, the maximum speed differs.

	Stroke (mm)	Max. speed (mm/s)
X-axis	750	1000
	850	800
	950 to 1050	600

Max. load capacity (kg)		Y-axis stroke				
		100mm	200mm	300mm	400mm	500mm
Z-axis stroke	150mm	7.0	6.0	5.0	4.0	2.0
	250mm	6.0	5.0	4.0	4.0	2.0
	350mm	5.0	5.0	3.0	3.0	1.0

R: Right-handed

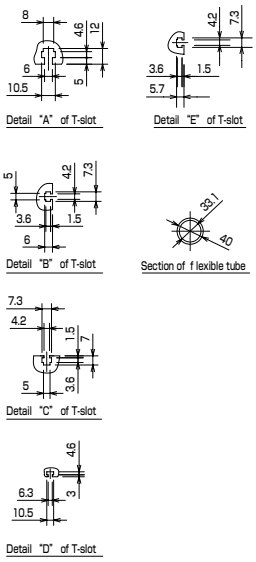

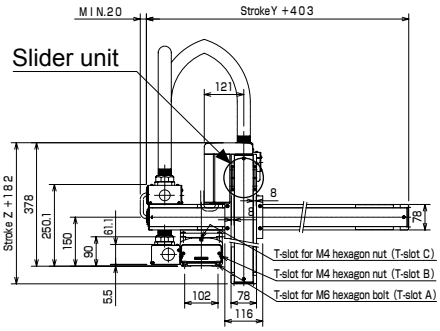

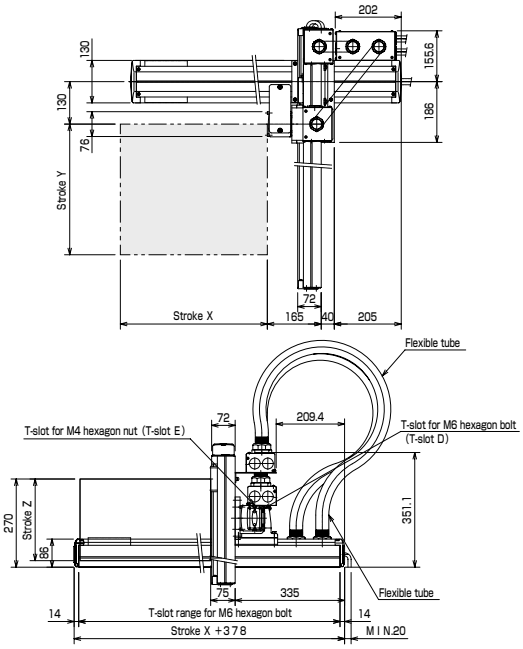

L: Left-handed

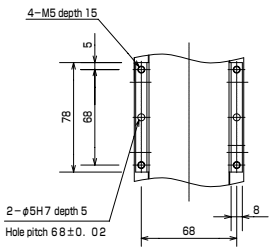

Z-axis slider unit

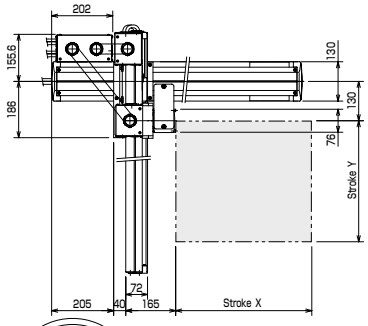

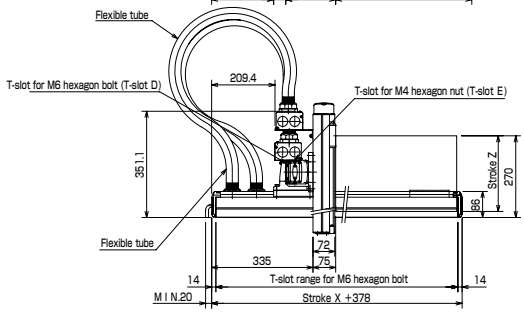

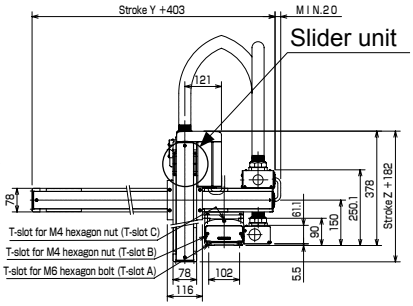

Example of Orthogonal Axes Combination: X-Y-Z Flexible tube spec Space-saving type

[Specifications]

	X-axis	Y-axis	Z-axis
Axis type	KBB-30E-U□-M20N-□0	KBB-10E-U□-M20N-□0	KBB-10E-U□-S10B-□5
Stroke	100 to 1000mm	100 to 500mm	150 to 350mm
Max. speed	1200mm/s (Note 1)	1200mm/s	600mm/s
Positioning repeatability	±0.01mm		
Lead	20mm	20mm	10mm
Motor output	100W	100W	100W, with brake
Resolution	0.01mm		

Acceleration/deceleration time when the maximum speed is set: 0.48 sec. or over

Ball screw type

X-axis: Ball screw driven Side mounted motor
Y-axis: Ball screw driven Side mounted motor
Z-axis: Ball screw driven Side mounted motor

Note 1: When the stroke is as given below, the maximum speed differs.

	Stroke (mm)	Max. speed (mm/s)
X-axis	700	1000
	800	800
	900 to 1000	600

Max. load capacity (kg)		Y-axis stroke				
		100mm	200mm	300mm	400mm	500mm
Z-axis stroke	150mm	7.0	6.0	5.0	4.0	2.0
	250mm	6.0	5.0	4.0	4.0	2.0
	350mm	5.0	5.0	3.0	3.0	1.0

R: Right-handed

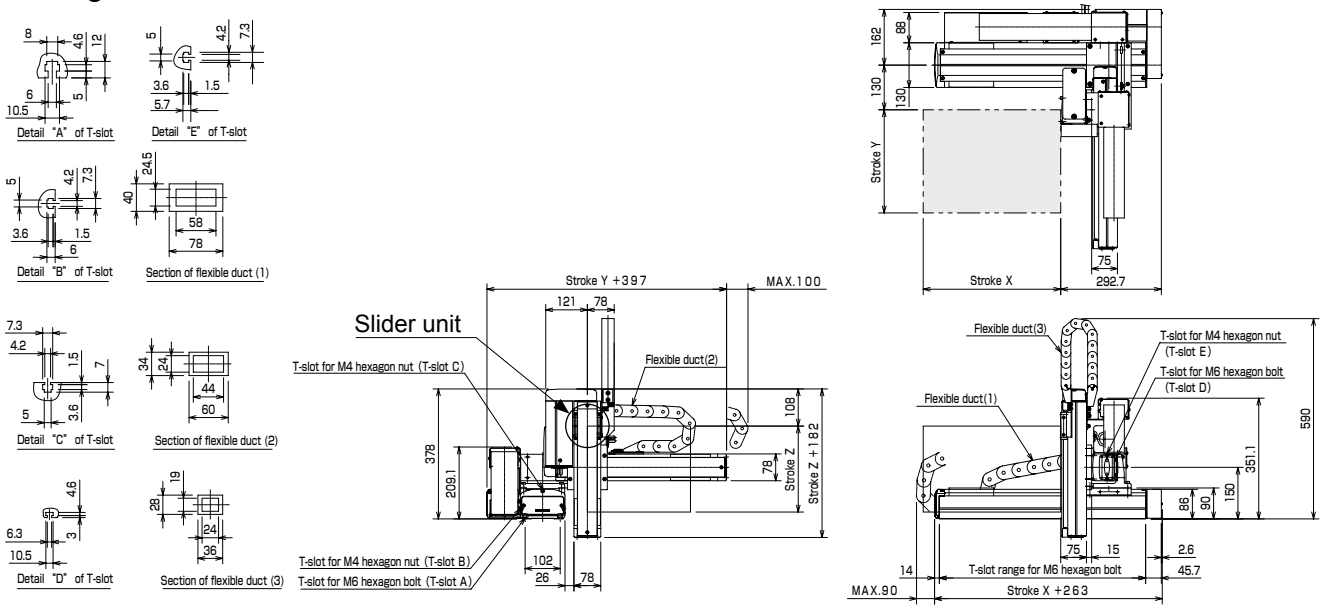

L: Left-handed

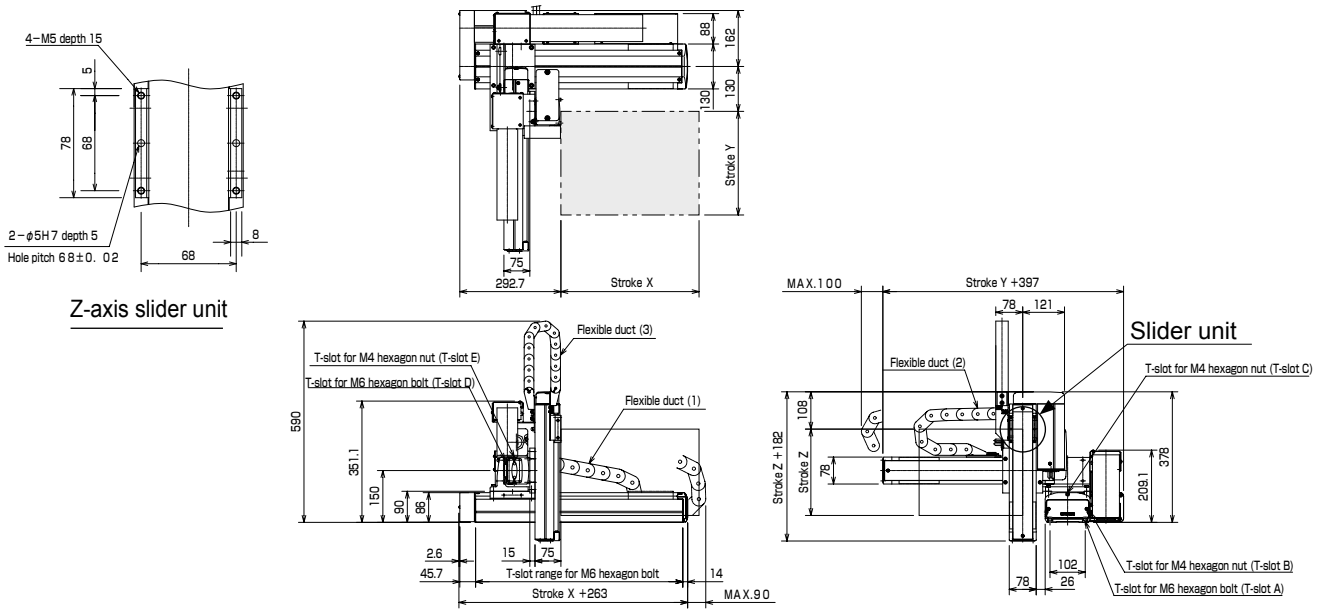

Discontinue

Example of Orthogonal Axes Combination: X-Y-Z Flexible tube spec Space-saving type

[Specifications]

	X-axis	Y-axis	Z-axis
Axis type	KBB-30E-U□-M20N-□0	KBB-10E-U□-M20N-□0	KBB-10E-U□-S10B-□5
Stroke	100 to 1000mm	100 to 500mm	150 to 350mm
Max. speed	1200mm/s (Note 1)	1200mm/s	600mm/s
Positioning repeatability	±0.01mm		
Lead	20mm	20mm	10mm
Motor output	100W	100W	100W, with brake
Resolution	0.01mm		

Acceleration/deceleration time when the maximum speed is set: 0.48 sec. or over

Ball screw type

X-axis: Ball screw driven
Side mounted motor
Y-axis: Ball screw driven
Side mounted motor
Z-axis: Ball screw driven
Side mounted motor

Note 1: When the stroke is as given below, the maximum speed differs.

	Stroke (mm)	Max. speed (mm/s)
X-axis	700	1000
	800	800
	900 to 1000	600

Max. load capacity (kg)		Y-axis stroke				
		100mm	200mm	300mm	400mm	500mm
Z-axis stroke	150mm	7.0	6.0	5.0	4.0	2.0
	250mm	6.0	5.0	4.0	4.0	2.0
	350mm	5.0	5.0	3.0	3.0	1.0

R: Right-handed

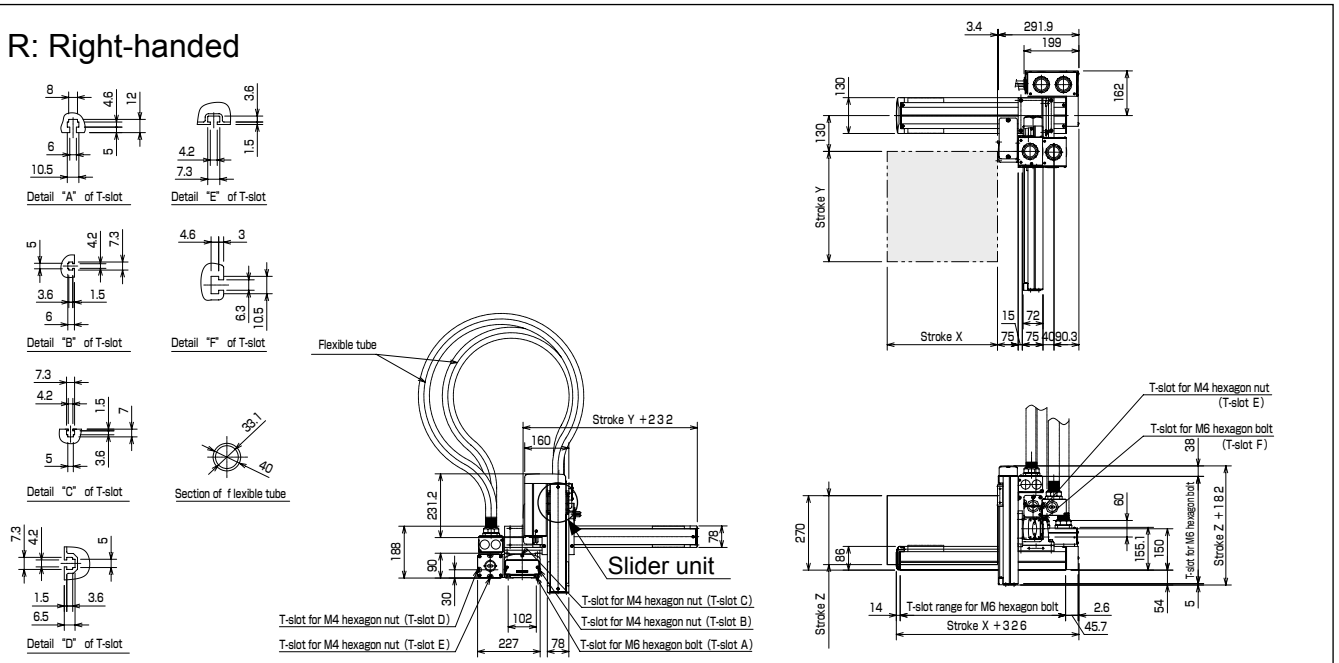

L: Left-handed

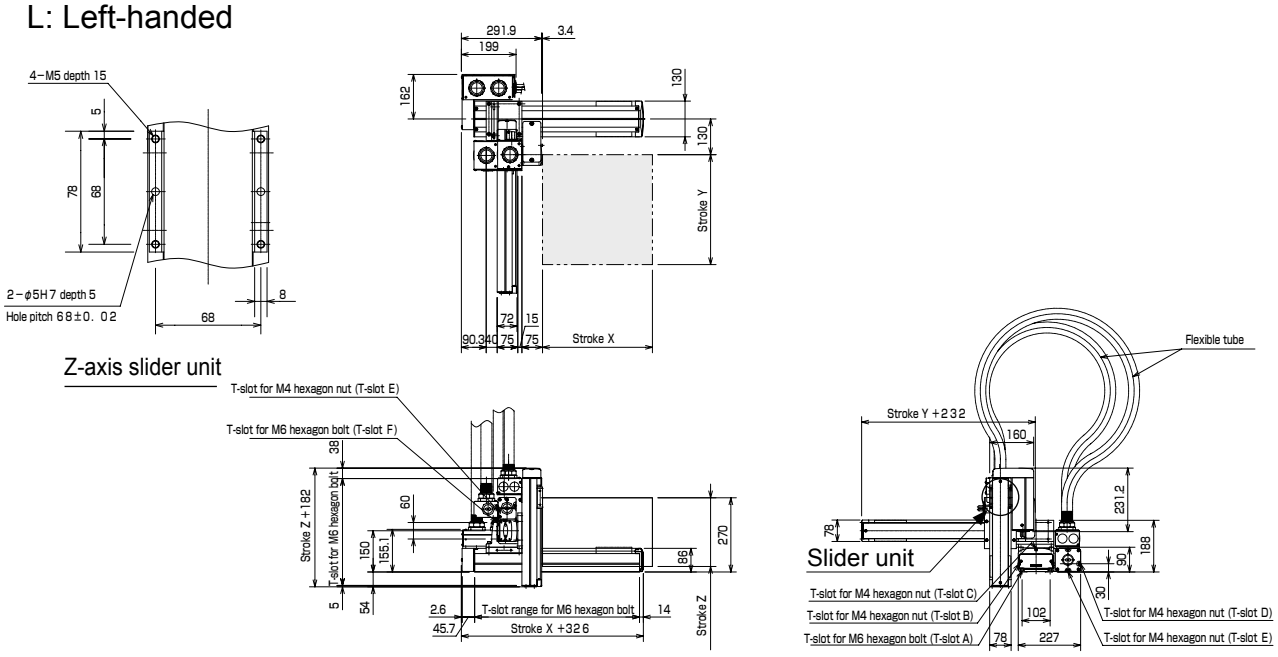

Example of Orthogonal Axes Combination: X-Y-Z Flexible duct spec

[Specifications]

	X-axis	Y-axis	Z-axis
Axis type	KBB-30F-ST-M20N-□0	KBB-10E-ST-M20N-□0	KBB-10E-U□-S10B-□5
Stroke	100 to 1000mm	100 to 500mm	150 to 350mm
Max. speed	1200mm/s (Note 1)	1200mm/s	600mm/s
Positioning repeatability	±0.01mm		
Lead	20mm	20mm	10mm
Motor output	200W	100W	100W, with brake
Resolution	0.01mm		

Acceleration/deceleration time when the maximum speed is set: 0.36 sec. or over

Ball screw type

X-axis: Ball screw driven
Motor straight
Y-axis: Ball screw driven
Motor straight
Z-axis: Ball screw driven
Side mounted motor

Note 1: When the stroke is as given below, the maximum speed differs.

	Stroke (mm)	Max. speed (mm/s)
X-axis	700	1000
	800	800
	900 to 1000	600

Max. load capacity (kg)		Y-axis stroke				
		100mm	200mm	300mm	400mm	500mm
Z-axis stroke	150mm	7.0	7.0	7.0	4.0	2.0
	250mm	7.0	7.0	6.0	4.0	1.0
	350mm	6.0	6.0	6.0	3.0	1.0

R: Right-handed

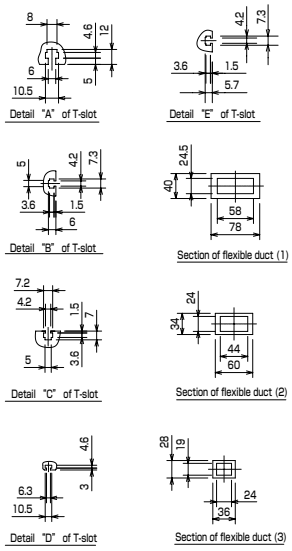

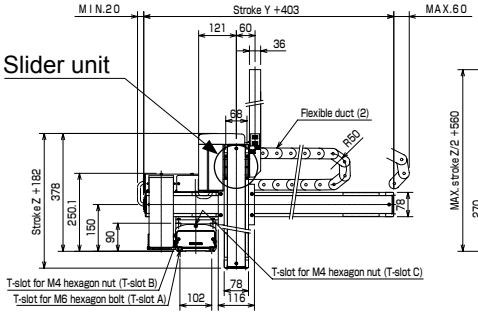

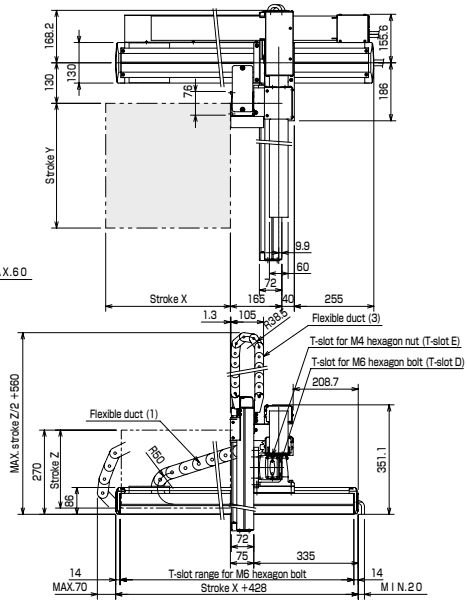

L: Left-handed

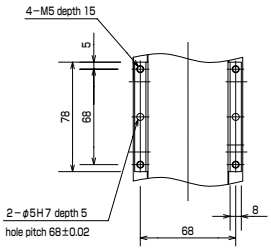

Z-axis slider unit

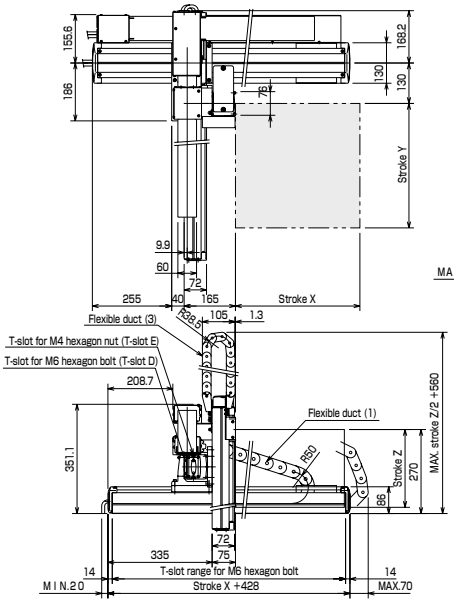

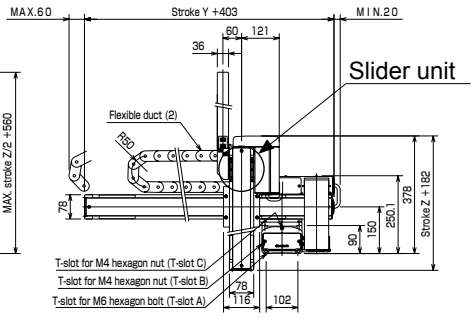

Discontinue

Example of Orthogonal Axes Combination: X-Y-Z Flexible tube spec

[Specifications]

	X-axis	Y-axis	Z-axis
Axis type	KBB-30F-ST-M20N-□0	KBB-10E-ST-M20N-□0	KBB-10E-U□-S10B-□5
Stroke	100 to 1000mm	100 to 500mm	150 to 350mm
Max. speed	1200mm/s (Note 1)	1200mm/s	600mm/s
Positioning repeatability	±0.01mm		
Lead	20mm	20mm	10mm
Motor output	200W	100W	100W, with brake
Resolution	0.01mm		

Acceleration/deceleration time when the maximum speed is set: 0.36 sec. or over

Ball screw type

X-axis: Ball screw driven
Motor straight
Y-axis: Ball screw driven
Motor straight
Z-axis: Ball screw driven
Side mounted motor

Note 1: When the stroke is as given below, the maximum speed differs.

	Stroke (mm)	Max. speed (mm/s)
X-axis	700	1000
	800	800
	900 to 1000	600

Max. load capacity (kg)		Y-axis stroke				
		100mm	200mm	300mm	400mm	500mm
Z-axis stroke	150mm	7.0	7.0	7.0	4.0	2.0
	250mm	7.0	7.0	6.0	4.0	1.0
	350mm	6.0	6.0	6.0	3.0	1.0

R: Right-handed

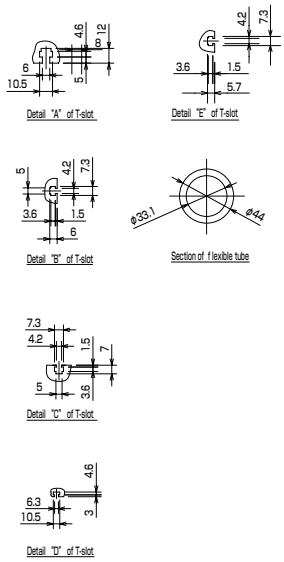

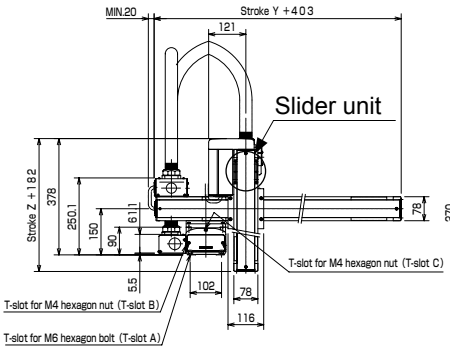

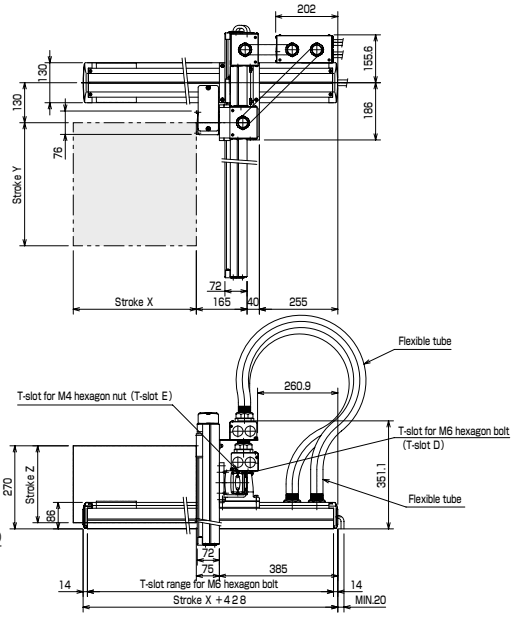

L: Left-handed

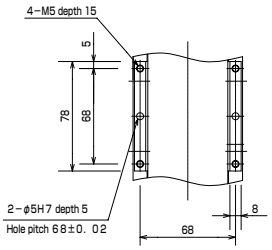

Z-axis slider unit

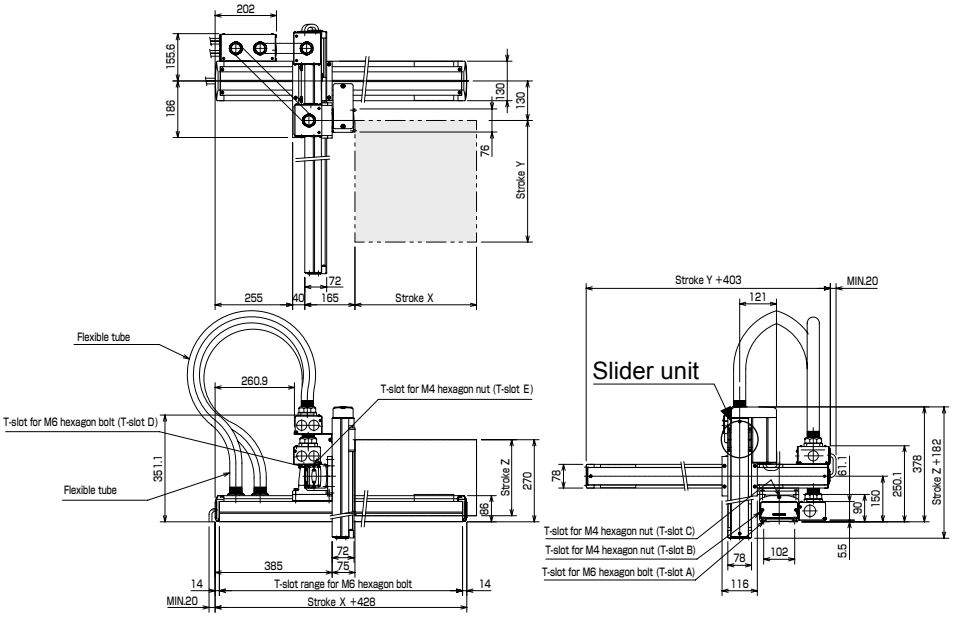

Example of Orthogonal Axes Combination: X-Y-Z Flexible duct spec Space-saving type

[Specifications]

	X-axis	Y-axis	Z-axis
Axis type	KBB-30F-U□-M20N-□0	KBB-10E-U□-M20N-□0	KBB-10E-U□-S10B-□5
Stroke	100 to 1000mm	100 to 500mm	150 to 350mm
Max. speed	1200mm/s (Note 1)	1200mm/s	600mm/s
Positioning repeatability	±0.01mm		
Lead	20mm	20mm	10mm
Motor output	200W	100W	100W, with brake
Resolution	0.01mm		

Acceleration/deceleration time when the maximum speed is set: 0.36 sec. or over

Ball screw type

X-axis: Ball screw driven Side mounted motor
Y-axis: Ball screw driven Side mounted motor
Z-axis: Ball screw driven Side mounted motor

Note 1: When the stroke is as given below, the maximum speed differs.

	Stroke (mm)	Max. speed (mm/s)
X-axis	700	1000
	800	800
	900 to 1000	600

Max. load capacity (kg)		Y-axis stroke				
		100mm	200mm	300mm	400mm	500mm
Z-axis stroke	150mm	7.0	7.0	7.0	4.0	2.0
	250mm	7.0	7.0	6.0	4.0	1.0
	350mm	6.0	6.0	6.0	3.0	1.0

R: Right-handed

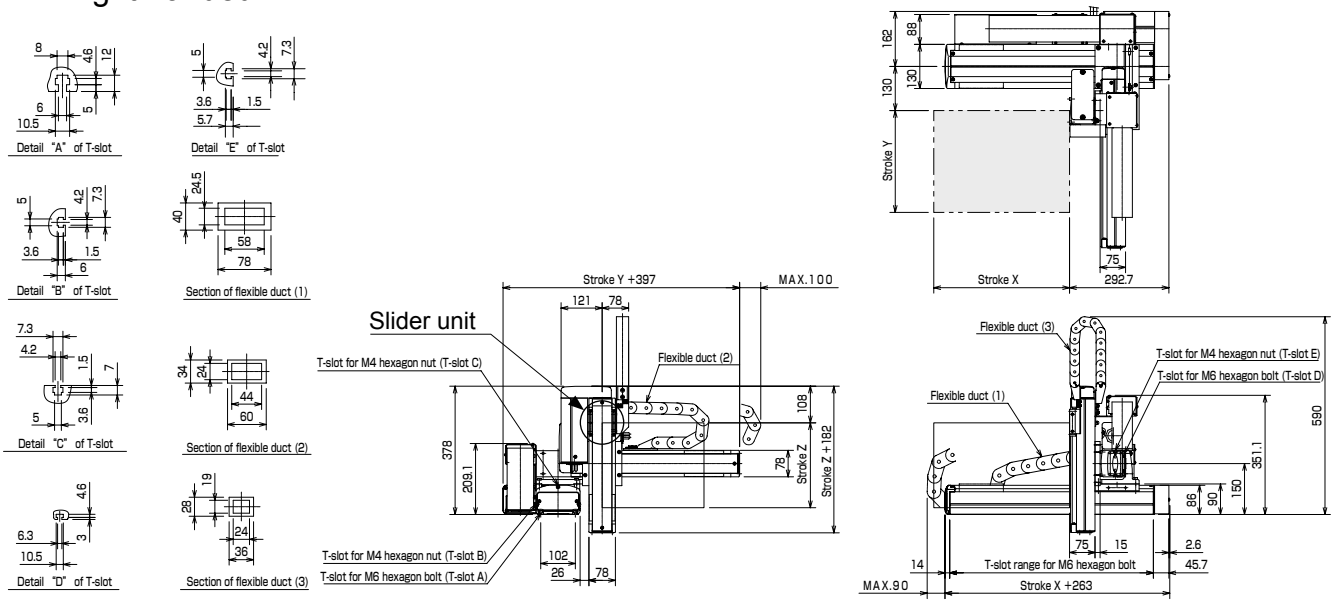

L: Left-handed

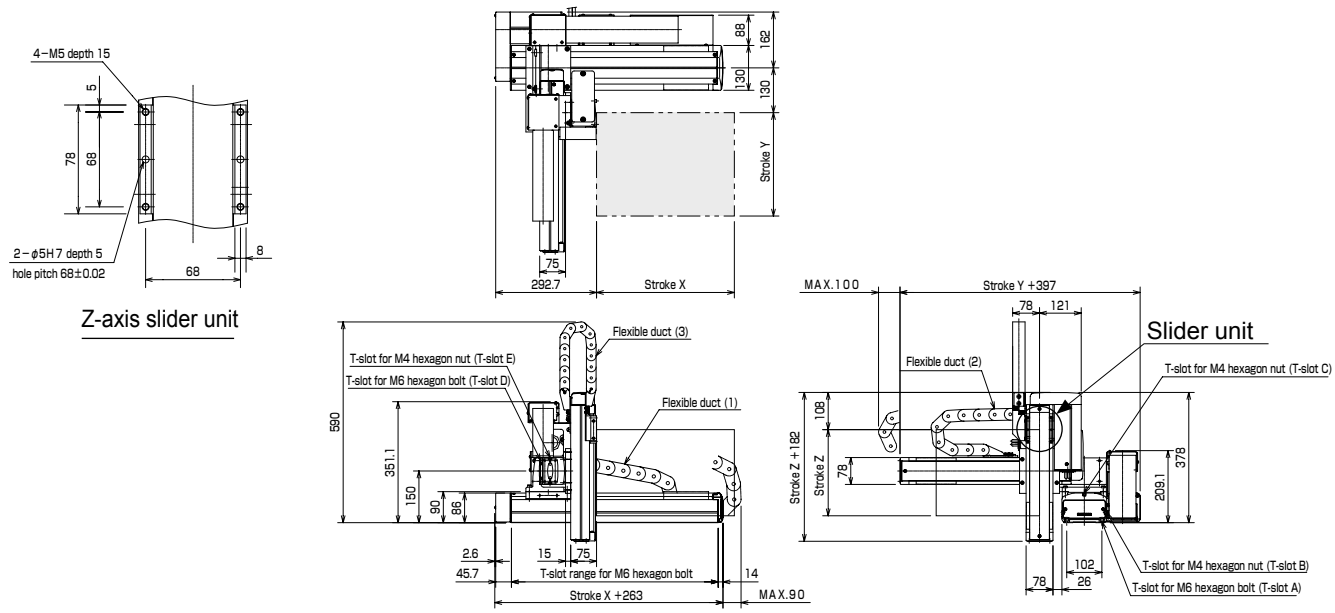

Discontinue

Example of Orthogonal Axes Combination: X-Y-Z Flexible tube spec Space-saving type

[Specifications]

	X-axis	Y-axis	Z-axis
Axis type	KBB-30F-U□-M20N-□0	KBB-10E-U□-M20N-□0	KBB-10E-U□-S10B-□5
Stroke	100 to 1000mm	100 to 500mm	150 to 350mm
Max. speed	1200mm/s (Note 1)	1200mm/s	600mm/s
Positioning repeatability	±0.01mm		
Lead	20mm	20mm	10mm
Motor output	200W	100W	100W, with brake
Resolution	0.01mm		

Acceleration/deceleration time when the maximum speed is set: 0.36 sec. or over

Ball screw type

X-axis: Ball screw driven
Side mounted motor
Y-axis: Ball screw driven
Side mounted motor
Z-axis: Ball screw driven
Side mounted motor

Note 1: When the stroke is as given below, the maximum speed differs.

	Stroke (mm)	Max. speed (mm/s)
X-axis	700	1000
	800	800
	900 to 1000	600

Max. load capacity (kg)		Y-axis stroke				
		100mm	200mm	300mm	400mm	500mm
Z-axis stroke	150mm	7.0	7.0	7.0	4.0	2.0
	250mm	7.0	7.0	6.0	4.0	1.0
	350mm	6.0	6.0	6.0	3.0	1.0

R: Right-handed

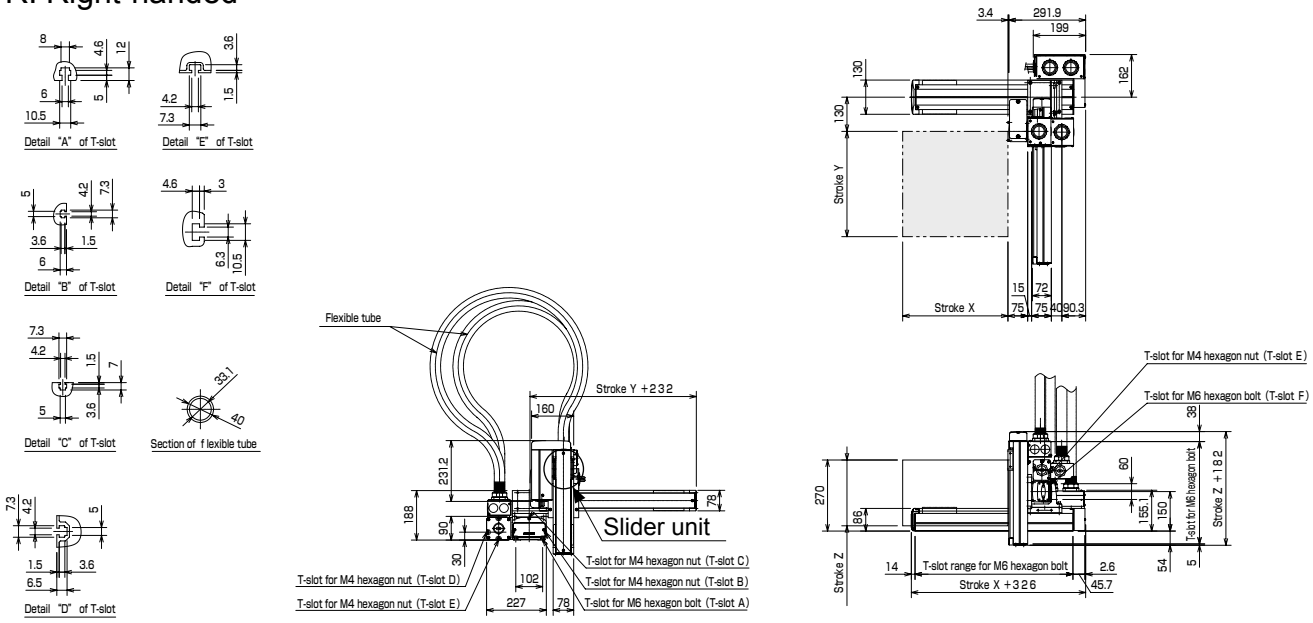

L: Left-handed

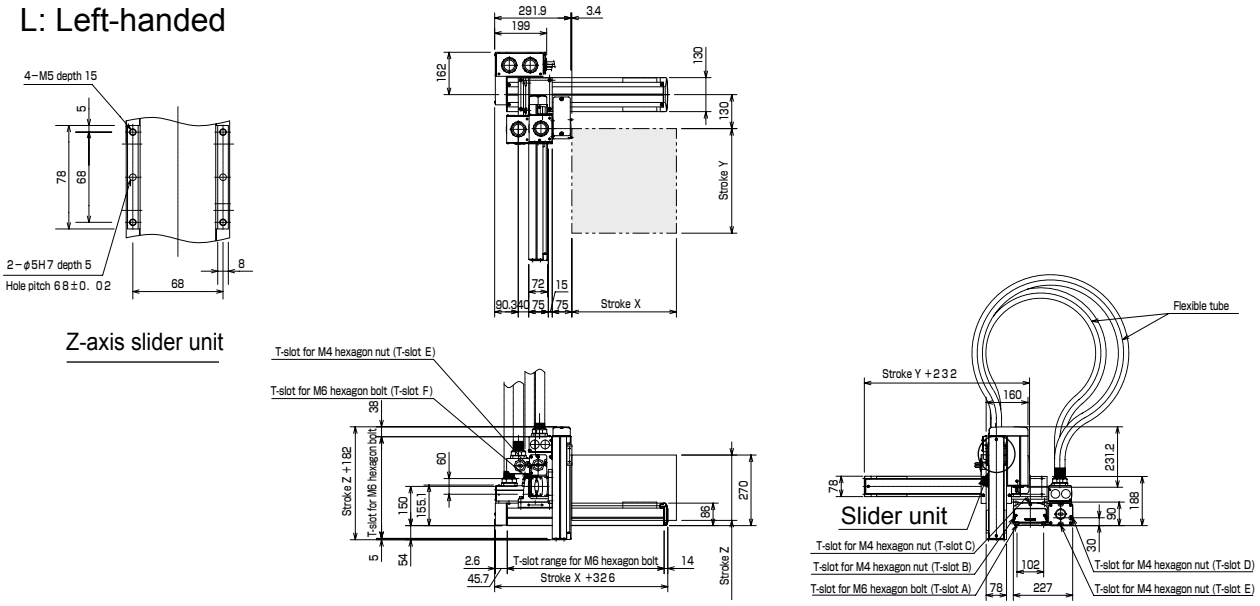

Example of Orthogonal Axes Combination: X-Y-Z Flexible duct spec

[Specifications]

	X-axis	Y-axis	Z-axis
Axis type	KBB-50F-ST-M20N-□0	KBB-30E-ST-M20N-□5	KBB-10E-ST-M05B-□0
Stroke (in increments of 100 mm)	200 to 1500mm	150 to 1050mm	100 to 300mm
Max. speed	1200mm/s (Note 1)	1200mm/s (Note 1)	300mm/s
Positioning repeatability	±0.01mm		
Lead	20mm	20mm	5mm
Motor output	200W	100W	100W, with brake
Resolution	0.01mm		

Acceleration/deceleration time when the maximum speed is set: 0.36 sec. or over

Ball screw type

X-axis: Ball screw driven
Motor straight
Y-axis: Ball screw driven
Motor straight
Z-axis: Ball screw driven
Motor straight

Note 1: When the stroke is as given below, the maximum speed differs.

	Stroke (mm)	Max. speed (mm/s)
X-axis	700 to 800	1100
	900 to 1000	1000
	1100 to 1200	700
	1300	500
	1400	400
	1500	300
Y-axis	750	1000
	850	800
	950 to 1050	600

Max. load capacity (kg)		Y-axis stroke									
		150mm	250mm	350mm	450mm	550mm	650mm	750mm	850mm	950mm	1050mm
Z-axis stroke	100mm	11.0	11.0	11.0	11.0	11.0	11.0	11.0	10.0	8.0	5.0
	200mm	10.0	10.0	10.0	10.0	10.0	10.0	10.0	10.0	7.0	4.0
	300mm	9.0	9.0	9.0	9.0	9.0	9.0	9.0	9.0	6.0	4.0

R: Right-handed

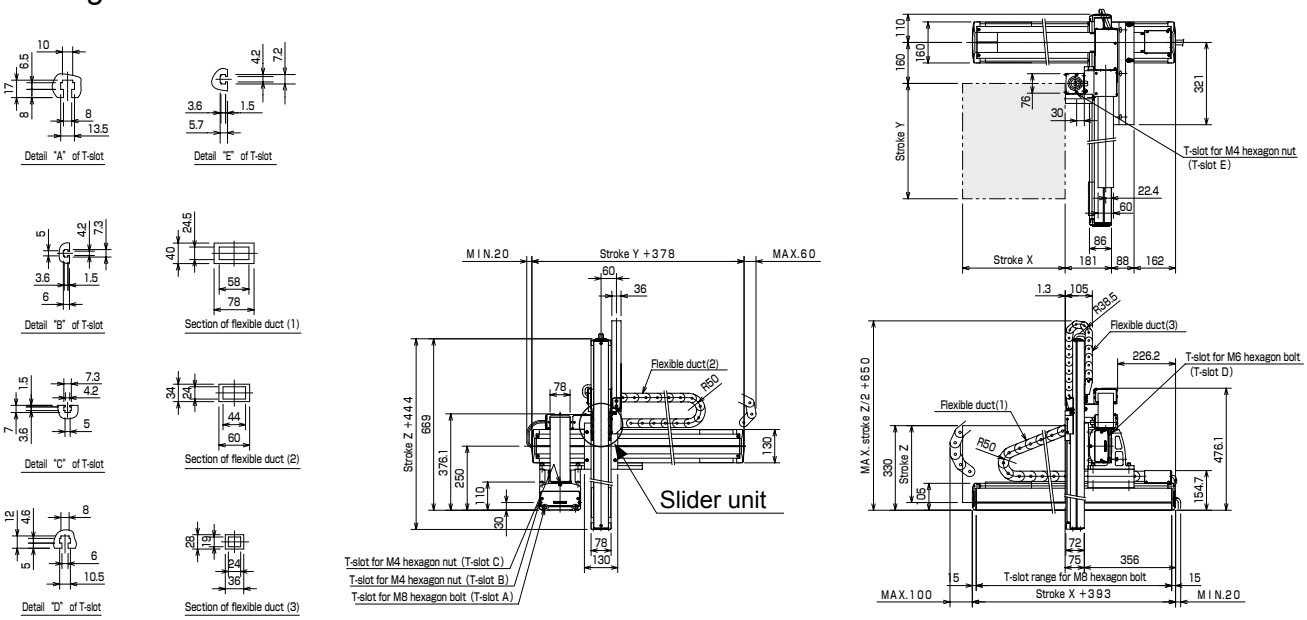

L: Left-handed

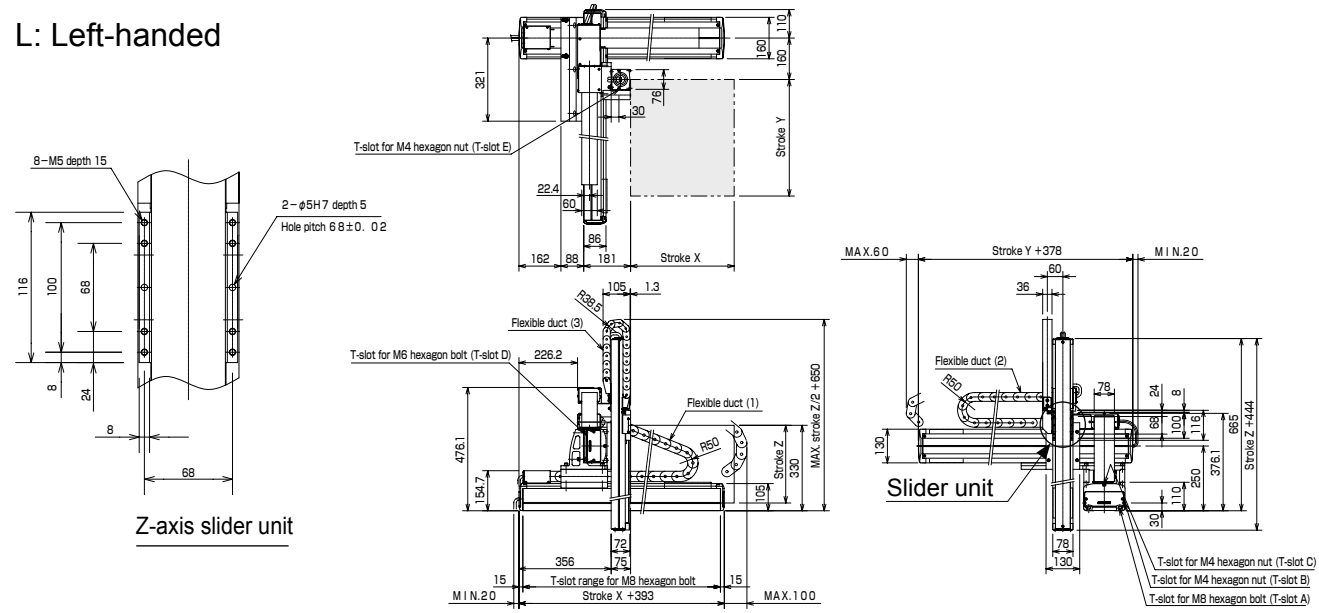

Discontinue

Example of Orthogonal Axes Combination: X-Y-Z Flexible tube spec

[Specifications]

	X-axis	Y-axis	Z-axis
Axis type	KBB-50F-ST-M20N-□0	KBB-30E-ST-M20N-□5	KBB-10E-ST-M05B-□0
Stroke (in increments of 100 mm)	200 to 1500mm	150 to 1050mm	100 to 300mm
Max. speed	1200mm/s (Note 1)	1200mm/s (Note 1)	300mm/s
Positioning repeatability	±0.01mm		
Lead	20mm	20mm	5mm
Motor output	200W	100W	100W, with brake
Resolution	0.01mm		

Acceleration/deceleration time when the maximum speed is set: 0.36 sec. or over

Ball screw type

X-axis: Ball screw driven
Motor straight
Y-axis: Ball screw driven
Motor straight
Z-axis: Ball screw driven
Motor straight

Note 1: When the stroke is as given below, the maximum speed differs.

	Stroke (mm)	Max. speed (mm/s)
X-axis	700 to 800	1100
	900 to 1000	1000
	1100 to 1200	700
	1300	500
	1400	400
	1500	300
Y-axis	750	1000
	850	800
	950 to 1050	600

Max. load capacity (kg)		Y-axis stroke									
		150mm	250mm	350mm	450mm	550mm	650mm	750mm	850mm	950mm	1050mm
Z-axis stroke	100mm	11.0	11.0	11.0	11.0	11.0	11.0	11.0	10.0	8.0	5.0
	200mm	10.0	10.0	10.0	10.0	10.0	10.0	10.0	10.0	7.0	4.0
	300mm	9.0	9.0	9.0	9.0	9.0	9.0	9.0	9.0	6.0	4.0

R: Right-handed

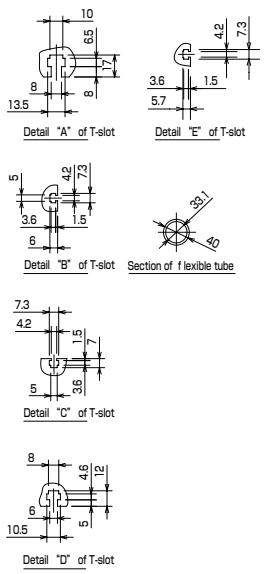

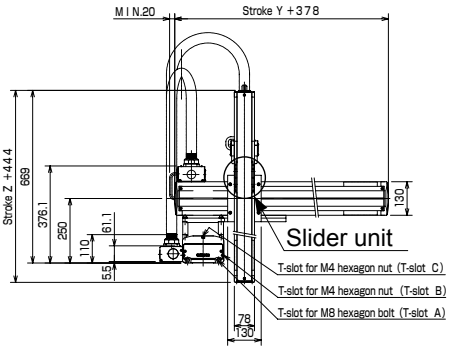

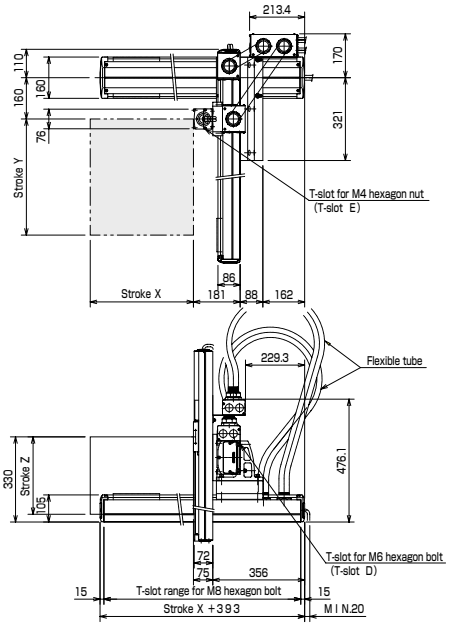

L: Left-handed

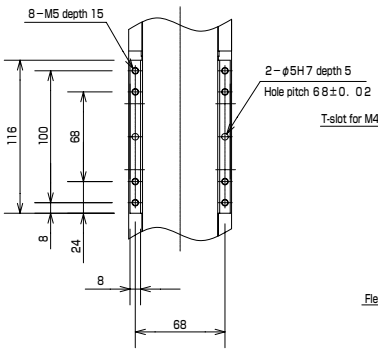

Z-axis slider unit

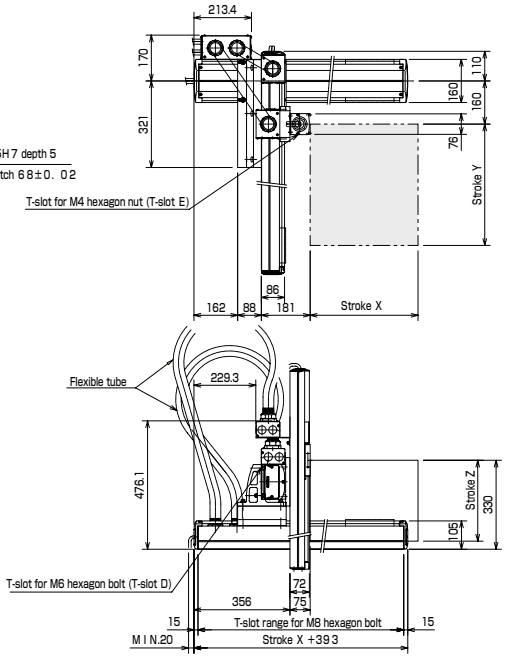

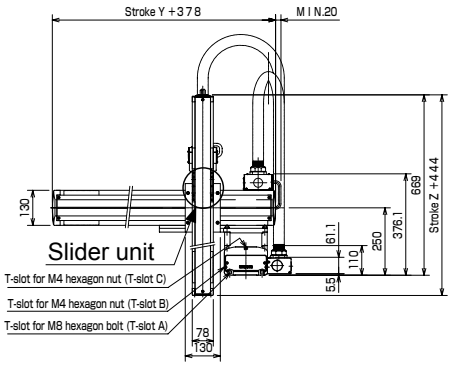

Example of Orthogonal Axes Combination: X-Y-Z Flexible duct spec Space saving type

[Specifications]

	X-axis	Y-axis	Z-axis
Axis type	KBB-50F-U□-M20N-□0	KBB-30E-ST-M20N-□5	KBB-10E-ST-M05B-□0
Stroke (in increments of 100 mm)	200 to 1500mm	150 to 1050mm	100 to 300mm
Max. speed	1200mm/s (Note 1)	1200mm/s (Note 1)	300mm/s
Positioning repeatability	±0.01mm		
Lead	20mm	20mm	5mm
Motor output	200W	100W	100W, with brake
Resolution	0.01mm		

Acceleration/deceleration time when the maximum speed is set: 0.36 sec. or over

Ball screw type

X-axis: Ball screw driven
Side mounted motor
Y-axis: Ball screw driven
Motor straight
Z-axis: Ball screw driven
Motor straight

Note 1: When the stroke is as given below, the maximum speed differs.

	Stroke (mm)	Max. speed (mm/s)
X-axis	700 to 800	1100
	900 to 1000	1000
	1100 to 1200	700
	1300	500
	1400	400
	1500	300
Y-axis	750	1000
	850	800
	950 to 1050	600

Max. load capacity (kg)		Y-axis stroke									
		150mm	250mm	350mm	450mm	550mm	650mm	750mm	850mm	950mm	1050mm
Z-axis stroke	100mm	11.0	11.0	11.0	11.0	11.0	11.0	11.0	10.0	8.0	5.0
	200mm	10.0	10.0	10.0	10.0	10.0	10.0	10.0	10.0	7.0	4.0
	300mm	9.0	9.0	9.0	9.0	9.0	9.0	9.0	9.0	6.0	4.0

R: Right-handed

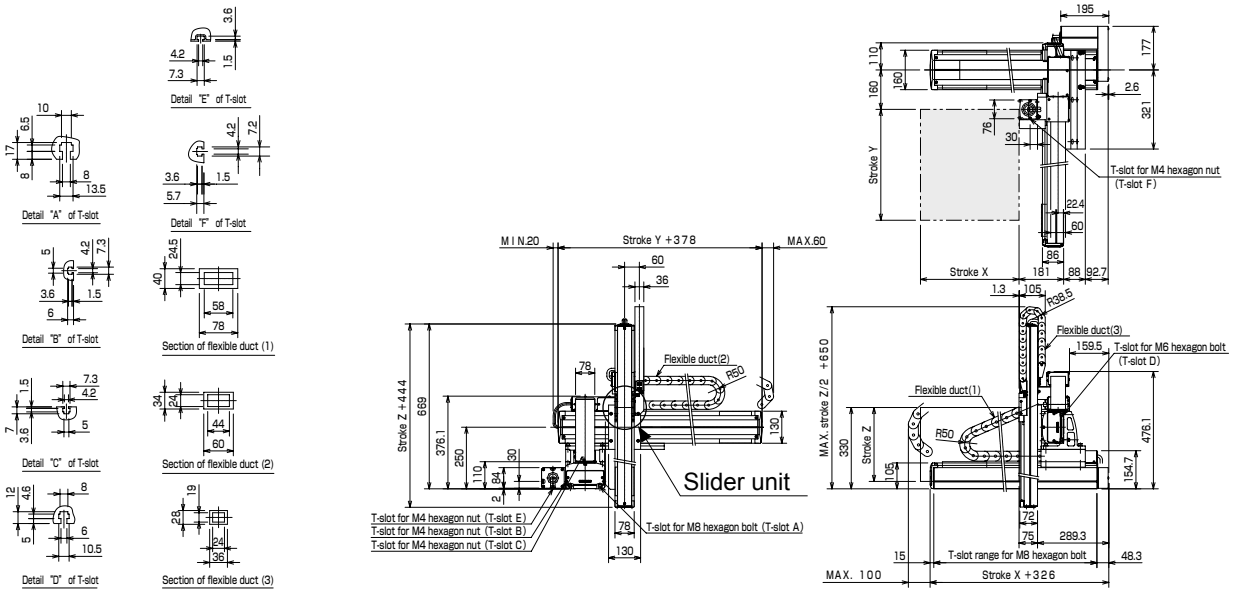

L: Left-handed

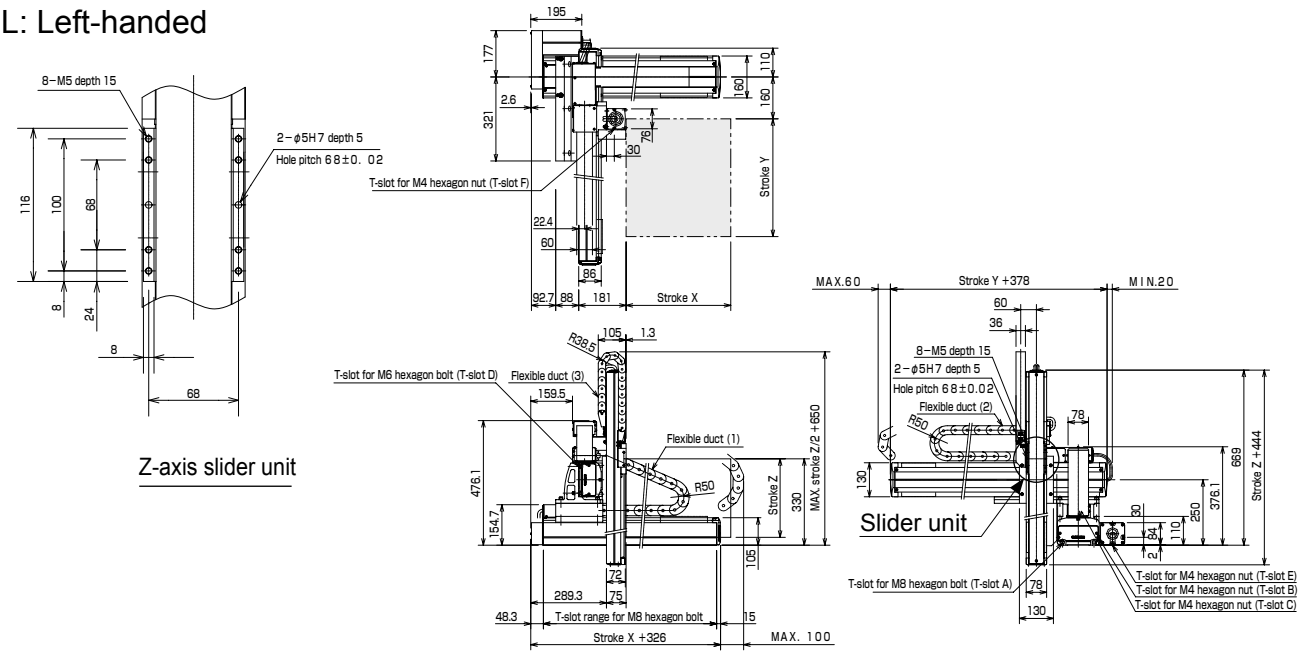

Discontinue

Example of Orthogonal Axes Combination: X-Y-Z Flexible tube spec Space-saving type

[Specifications]

	X-axis	Y-axis	Z-axis
Axis type	KBB-50F-U□-M20N-□0	KBB-30E-ST-M20N-□5	KBB-10E-ST-M05B-□0
Stroke (in increments of 100 mm)	200 to 1500mm	150 to 1050mm	100 to 300mm
Max. speed	1200mm/s (Note 1)	1200mm/s (Note 1)	300mm/s
Positioning repeatability	±0.01mm		
Lead	20mm	20mm	5mm
Motor output	200W	100W	100W, with brake
Resolution	0.01mm		

Acceleration/deceleration time when the maximum speed is set: 0.36 sec. or over

Ball screw type

X-axis: Ball screw driven
Side mounted motor
Y-axis: Ball screw driven
Motor straight
Z-axis: Ball screw driven
Motor straight

Note 1: When the stroke is as given below, the maximum speed differs.

	Stroke (mm)	Max. speed (mm/s)
X-axis	700 to 800	1100
	900 to 1000	1000
	1100 to 1200	700
	1300	500
	1400	400
	1500	300
Y-axis	750	1000
	850	800
	950 to 1050	600

Max. load capacity (kg)		Y-axis stroke									
		150mm	250mm	350mm	450mm	550mm	650mm	750mm	850mm	950mm	1050mm
Z-axis stroke	100mm	11.0	11.0	11.0	11.0	11.0	11.0	11.0	10.0	8.0	5.0
	200mm	10.0	10.0	10.0	10.0	10.0	10.0	10.0	10.0	7.0	4.0
	300mm	9.0	9.0	9.0	9.0	9.0	9.0	9.0	9.0	6.0	4.0

R: Right-handed

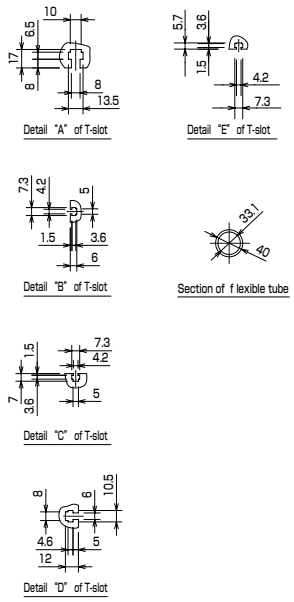

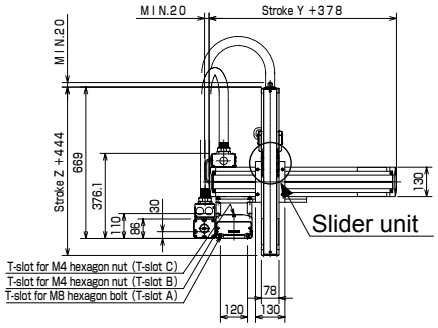

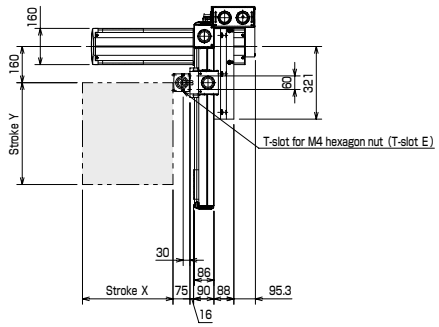

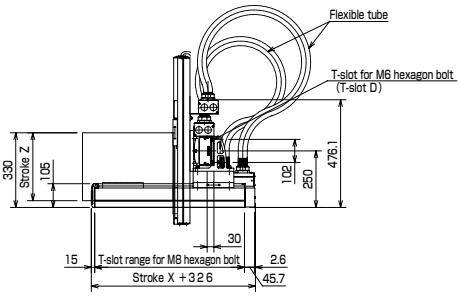

L: Left-handed

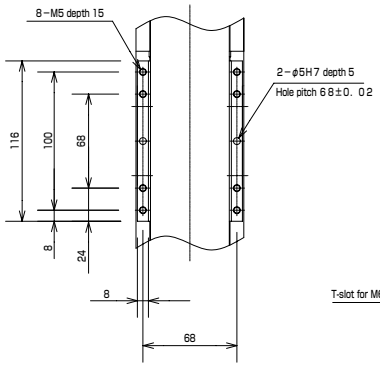

Z-axis slider unit

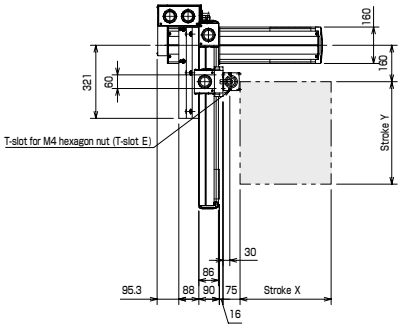

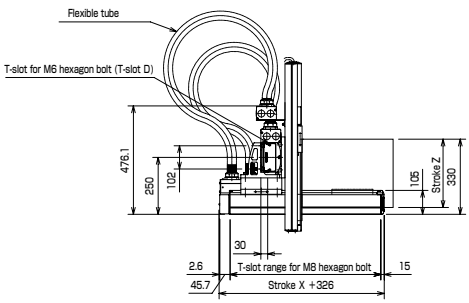

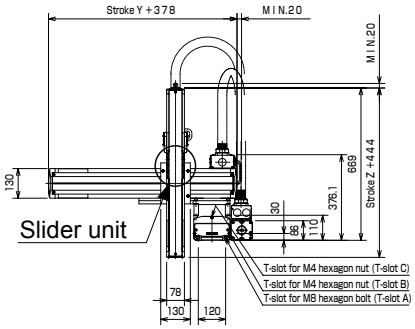

Example of Orthogonal Axes Combination: X-Y-Z Flexible duct spec

[Specifications]

	X-axis	Y-axis	Z-axis
Axis type	KBB-50F-ST-M20N-□0	KBB-30F-ST-M20N-□0	KBB-10E-ST-M05B-□0
Stroke (in increments of 100 mm)	200 to 1500mm	100 to 1000mm	100 to 300mm
Max. speed	1200mm/s (Note 1)	1200mm/s (Note 1)	300mm/s
Positioning repeatability	±0.01mm		
Lead	20mm	20mm	5mm
Motor output	200W	200W	100W, with brake
Resolution	0.01mm		

Acceleration/deceleration time when the maximum speed is set: 0.36 sec. or over

Ball screw type
X-axis: Ball screw driven Motor straight
Y-axis: Ball screw driven Motor straight
Z-axis: Ball screw driven Motor straight

Note 1: When the stroke is as given below, the maximum speed differs.

	Stroke (mm)	Max. speed (mm/s)
X-axis	700 to 800	1100
	900 to 1000	1000
	1100 to 1200	700
	1300	500
	1400	400
	1500	300
Y-axis	700	1000
	800	800
	900 to 1000	600

Max. load capacity (kg)		Y-axis stroke									
		100mm	200mm	300mm	400mm	500mm	600mm	700mm	800mm	900mm	1000mm
Z-axis stroke	100mm	15.0	15.0	15.0	15.0	15.0	15.0	14.0	11.0	8.0	5.0
	200mm	15.0	15.0	15.0	15.0	15.0	15.0	13.0	10.0	7.0	5.0
	300mm	15.0	15.0	15.0	15.0	15.0	15.0	12.0	10.0	7.0	4.0

Note 1: When X-axis stroke is 1,100 mm or over, a flexible tray is mounted on the X-axis frame cover.

R: Right-handed

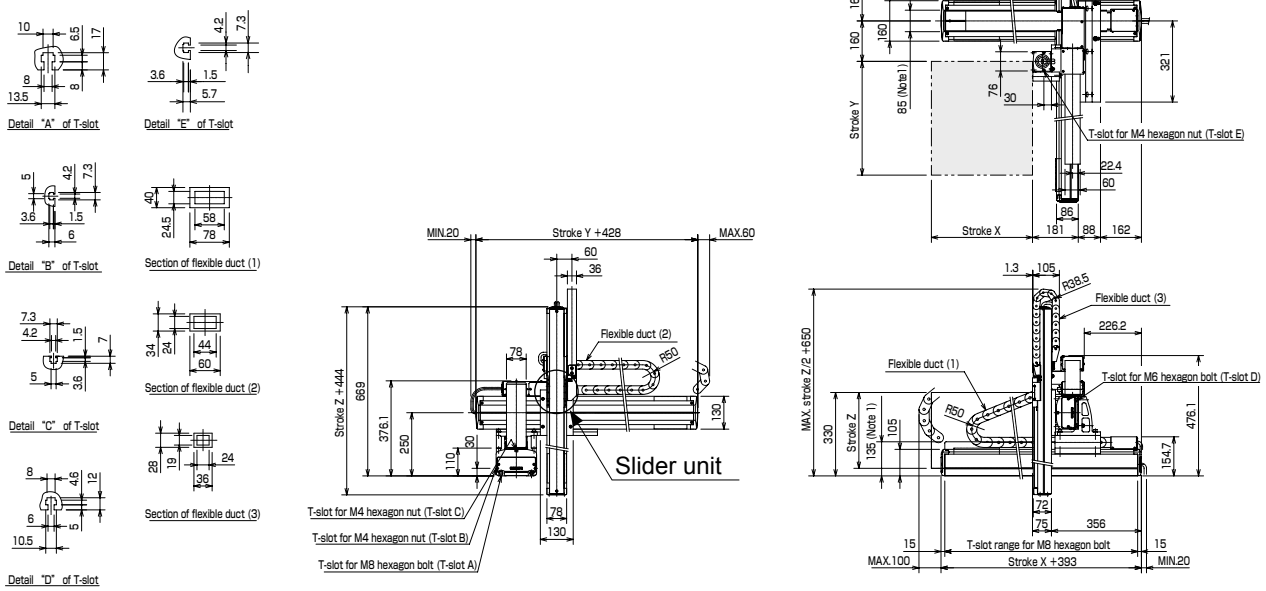

L: Left-handed

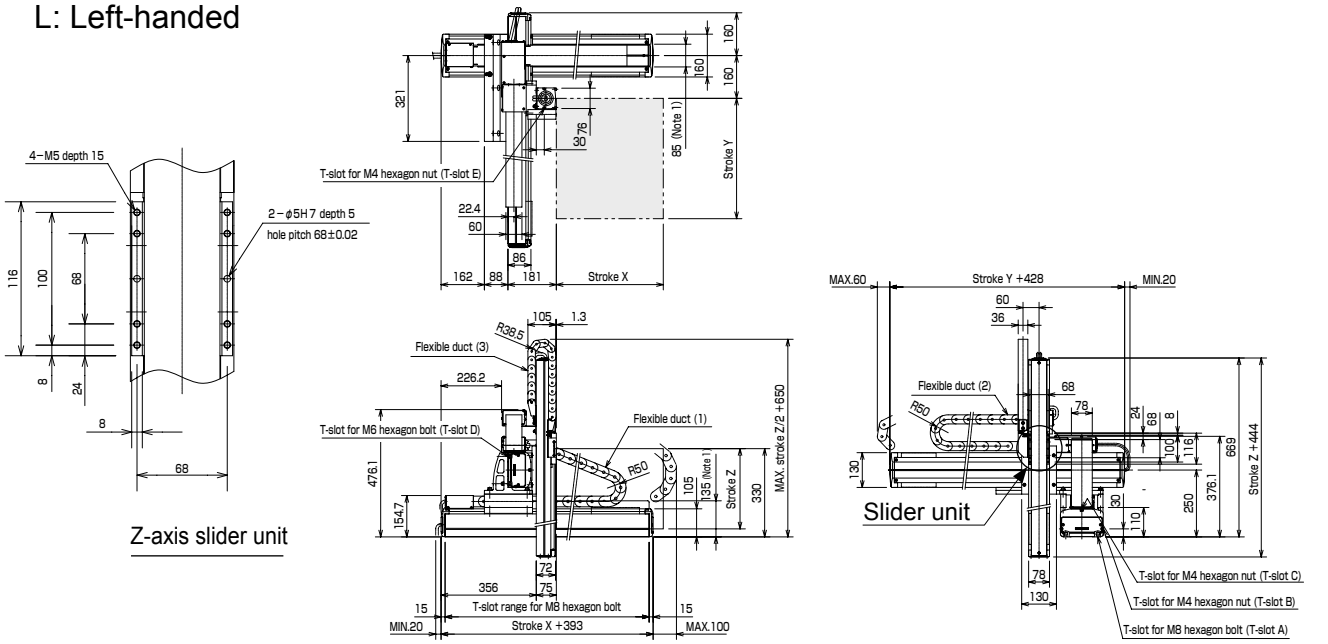

Discontinue

Example of Orthogonal Axes Combination: X-Y-Z Flexible tube spec

[Specifications]

	X-axis	Y-axis	Z-axis
Axis type	KBB-50F-ST-M20N-□0	KBB-30F-ST-M20N-□0	KBB-10E-ST-M05B-□0
Stroke (in increments of 100 mm)	200 to 1500mm	100 to 1000mm	100 to 300mm
Max. speed	1200mm/s (Note 1)	1200mm/s (Note 1)	300mm/s
Positioning repeatability	±0.01mm		
Lead	20mm	20mm	5mm
Motor output	200W	200W	100W, with brake
Resolution	0.01mm		

Acceleration/deceleration time when the maximum speed is set: 0.36 sec. or over

Ball screw type
X-axis: Ball screw driven Motor straight
Y-axis: Ball screw driven Motor straight
Z-axis: Ball screw driven Motor straight

Note 1: When the stroke is as given below, the maximum speed differs.

	Stroke (mm)	Max. speed (mm/s)
X-axis	700 to 800	1100
	900 to 1000	1000
	1100 to 1200	700
	1300	500
	1400	400
	1500	300
Y-axis	700	1000
	800	800
	900 to 1000	600

Max. load capacity (kg)		Y-axis stroke									
		100mm	200mm	300mm	400mm	500mm	600mm	700mm	800mm	900mm	1000mm
Z-axis stroke	100mm	15.0	15.0	15.0	15.0	15.0	15.0	14.0	11.0	8.0	5.0
	200mm	15.0	15.0	15.0	15.0	15.0	15.0	13.0	10.0	7.0	5.0
	300mm	15.0	15.0	15.0	15.0	15.0	15.0	12.0	10.0	7.0	4.0

R: Right-handed

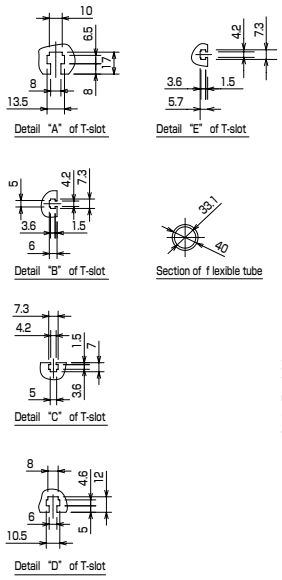

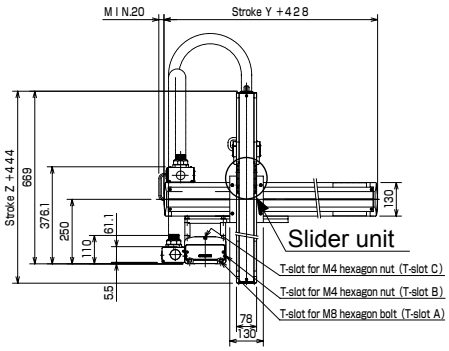

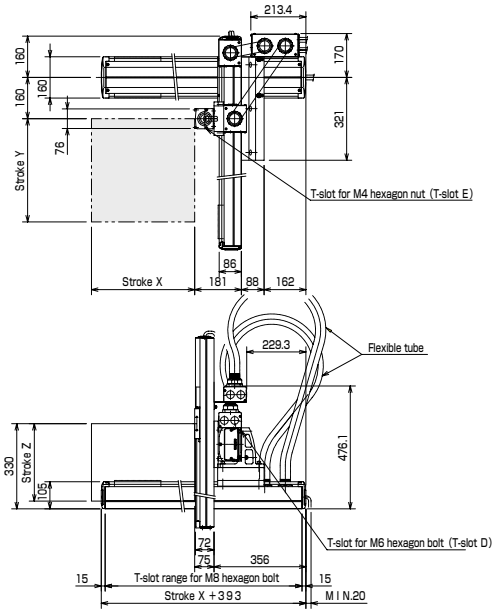

L: Left-handed

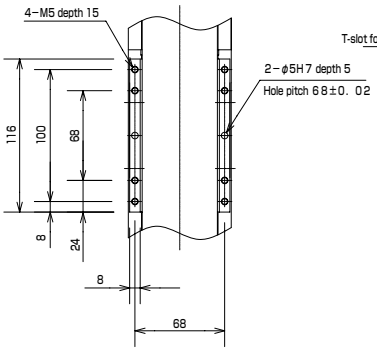

Z-axis slider unit

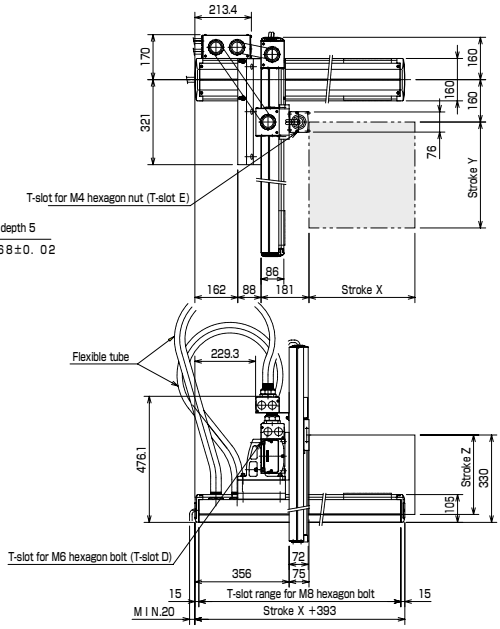

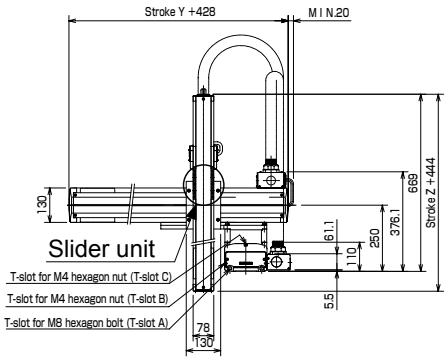

Example of Orthogonal Axes Combination: X-Y-Z Flexible duct spec Space-saving type

[Specifications]

	X-axis	Y-axis	Z-axis
Axis type	KBB-50F-U□-M20N-□0	KBB-30F-ST-M20N-□0	KBB-10E-ST-M05B-□0
Stroke (in increments of 100 mm)	200 to 1500mm	100 to 1000mm	100 to 300mm
Max. speed	1200mm/s (Note 1)	1200mm/s (Note 1)	300mm/s
Positioning repeatability	±0.01mm		
Lead	20mm	20mm	5mm
Motor output	200W	200W	100W, with brake
Resolution	0.01mm		

Acceleration/deceleration time when the maximum speed is set: 0.36 sec. or over

Ball screw type
X-axis: Ball screw driven
Side mounted motor
Y-axis: Ball screw driven
Motor straight
Z-axis: Ball screw driven
Motor straight

Note 1: When the stroke is as given below, the maximum speed differs.

	Stroke (mm)	Max. speed (mm/s)
X-axis	700 to 800	1100
	900 to 1000	1000
	1100 to 1200	700
	1300	500
	1400	400
	1500	300
Y-axis	700	1000
	800	800
	900 to 1000	600

Max. load capacity (kg)		Y-axis stroke									
		100mm	200mm	300mm	400mm	500mm	600mm	700mm	800mm	900mm	1000mm
Z-axis stroke	100mm	15.0	15.0	15.0	15.0	15.0	15.0	14.0	11.0	8.0	5.0
	200mm	15.0	15.0	15.0	15.0	15.0	15.0	13.0	10.0	7.0	5.0
	300mm	15.0	15.0	15.0	15.0	15.0	15.0	12.0	10.0	7.0	4.0

R: Right-handed

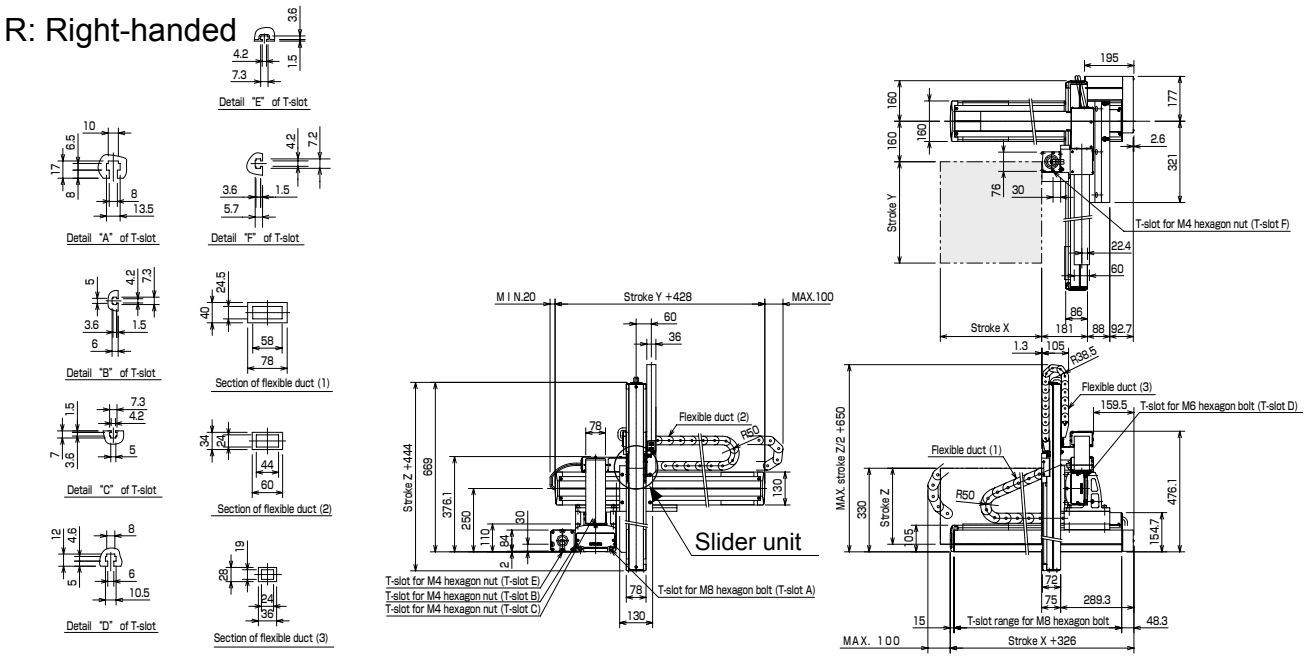

L: Left-handed

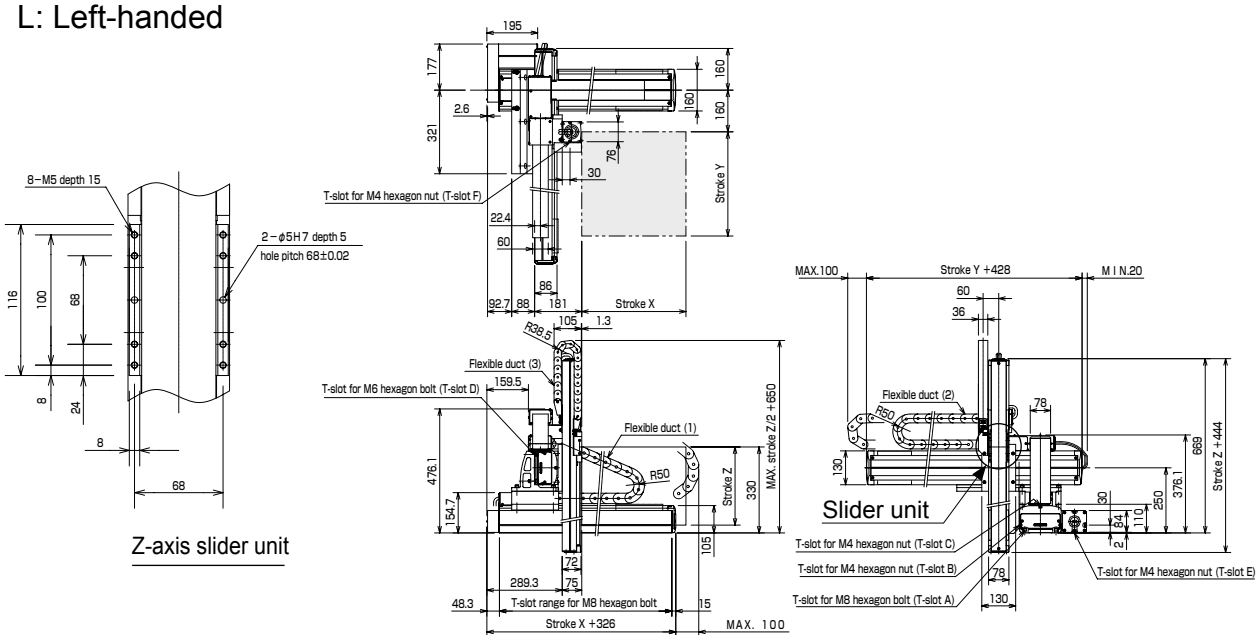

Discontinue

Example of Orthogonal Axes Combination: X-Y-Z Flexible duct spec Space-saving type

[Specifications]

	X-axis	Y-axis	Z-axis
Axis type	KBB-50F-U□-M20N-□0	KBB-30F-ST-M20N-□0	KBB-10E-ST-M05B-□0
Stroke (in increments of 100 mm)	200 to 1500mm	100 to 1000mm	100 to 300mm
Max. speed	1200mm/s (Note 1)	1200mm/s (Note 1)	300mm/s
Positioning repeatability	±0.01mm		
Lead	20mm	20mm	5mm
Motor output	200W	200W	100W, with brake
Resolution	0.01mm		

Acceleration/deceleration time when the maximum speed is set: 0.36 sec. or over

Ball screw type
X-axis: Ball screw driven
Side mounted motor
Y-axis: Ball screw driven
Motor straight
Z-axis: Ball screw driven
Motor straight

Note 1: When the stroke is as given below, the maximum speed differs.

	Stroke (mm)	Max. speed (mm/s)
X-axis	700 to 800	1100
	900 to 1000	1000
	1100 to 1200	700
	1300	500
	1400	400
	1500	300
Y-axis	700	1000
	800	800
	900 to 1000	600

Max. load capacity (kg)		Y-axis stroke									
		100mm	200mm	300mm	400mm	500mm	600mm	700mm	800mm	900mm	1000mm
Z-axis stroke	100mm	15.0	15.0	15.0	15.0	15.0	15.0	14.0	11.0	8.0	5.0
	200mm	15.0	15.0	15.0	15.0	15.0	15.0	13.0	10.0	7.0	5.0
	300mm	15.0	15.0	15.0	15.0	15.0	15.0	12.0	10.0	7.0	4.0

R: Right-handed

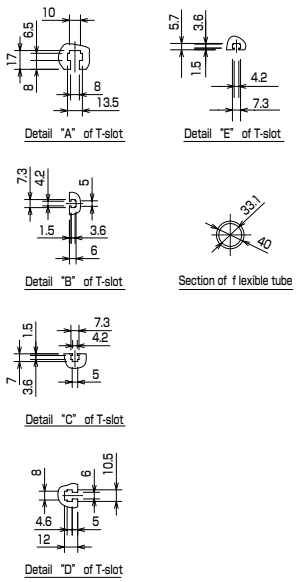

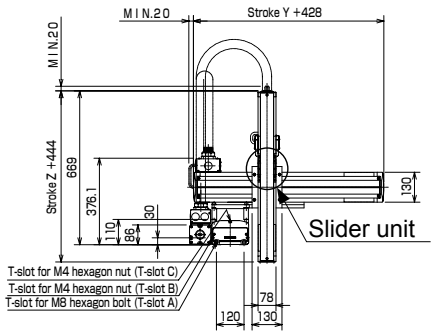

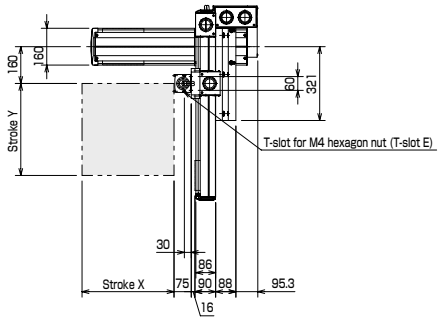

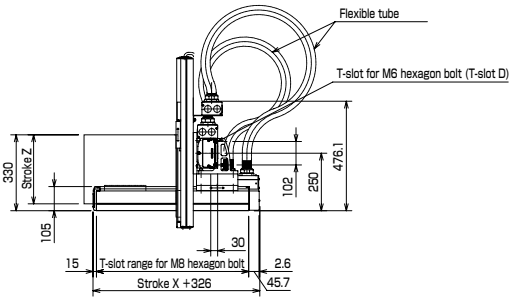

L: Left-handed

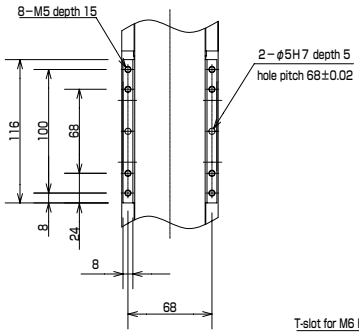

Z-axis slider unit

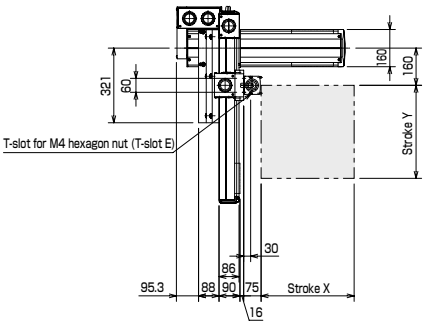

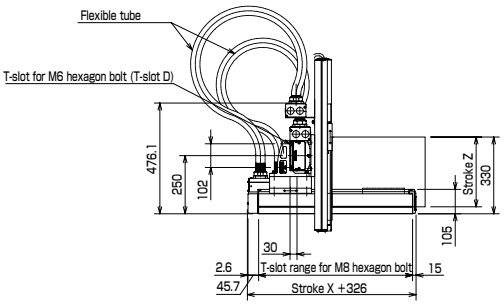

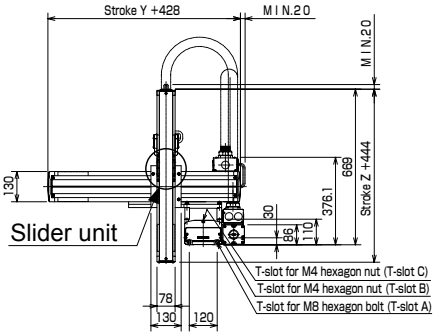

Example of Orthogonal Axes Combination: X-Y-Z Flexible duct spec

[Specifications]

	X-axis	Y-axis	Z-axis
Axis type	KBB-10E-BT-M21N-□5	KBB-07D-ST-M21N-□□	KBB-05D-ST-M12B-□□
Stroke (in increments of 100 mm for X, Y-axis, 50 mm for Z-axis)	150 to 1850mm	150 to 300mm	50 to 300mm
Max. speed	1000mm/s	800mm/s	800mm/s
Positioning repeatability	±0.05mm	±0.02mm	±0.02mm
Lead	21mm (ball screw lead)	12mm	12mm
Motor output	100W	50W	50W, with brake
Resolution	0.01mm		

Acceleration/deceleration time when the maximum speed is set: 0.3 sec. or over

Timing belt type

X-axis: Timing belt driven
Side mounted motor
Y-axis: Ball screw driven
Motor straight
Z-axis: Ball screw driven
Motor straight

Max. load capacity (kg)		Y-axis stroke					
		50mm	100mm	150mm	200mm	250mm	300mm
Z-axis stroke	50,100mm	3.0	3.0	3.0	3.0	1.2	1.2
	150,200mm	3.0	3.0	3.0	3.0	1.0	1.0
	250,300mm	3.0	3.0	3.0	3.0	0.8	0.8

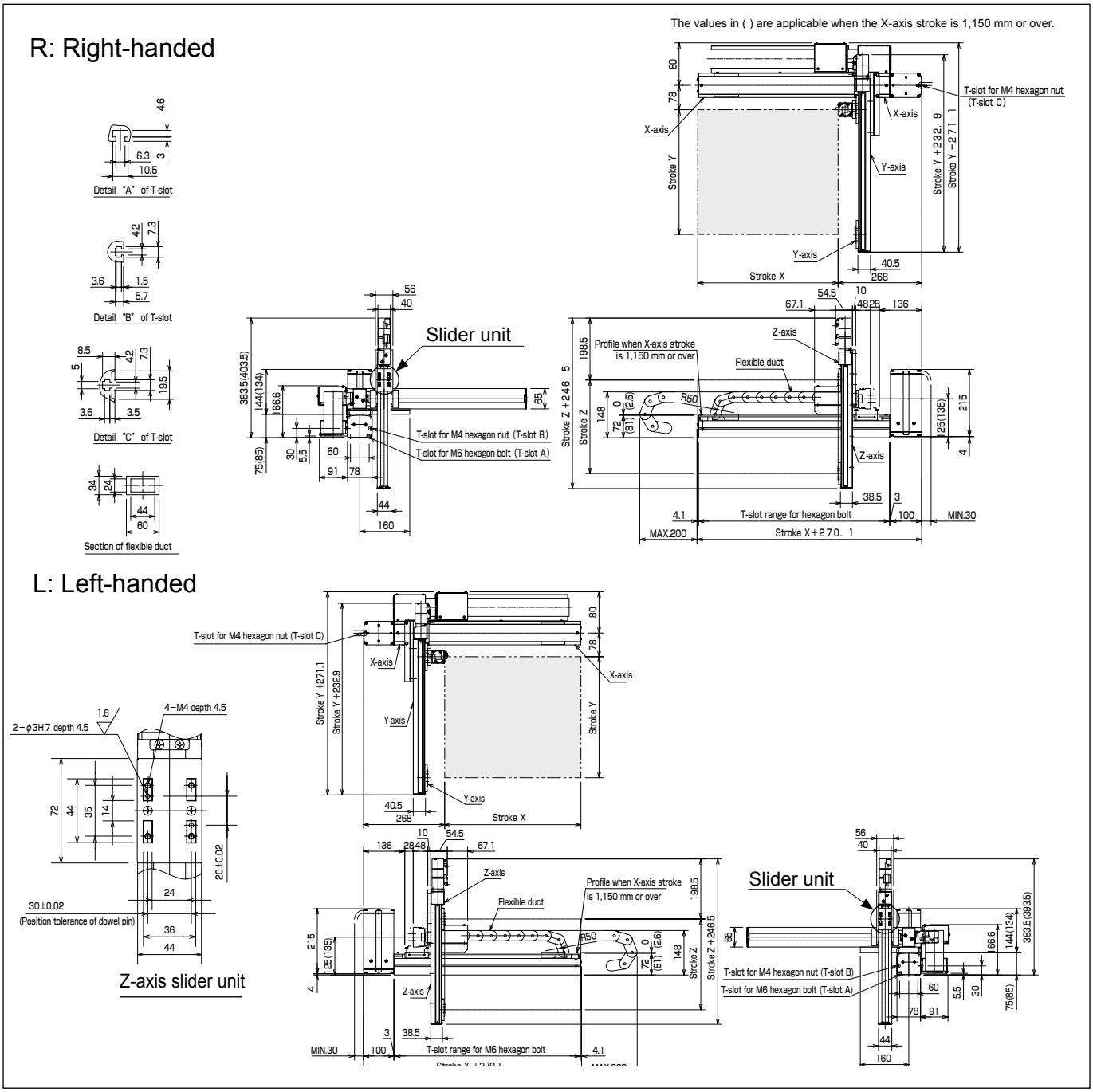

Discontinue

Example of Orthogonal Axes Combination: X-Y-Z Flexible duct spec

[Specifications]

	X-axis	Y-axis	Z-axis
Axis type	KBB-10E-BT-M21N-□0	KBB-10E-B□-S21N-□5	KBB-07D-ST-M12B-□□
Stroke (in increments of 100 mm for X, Y-axis, 50 mm for Z-axis)	100 to 1800mm	150 to 450mm	50 to 300mm
Max. speed	1000mm/s	1000mm/s	800mm/s
Positioning repeatability	±0.05mm	±0.05mm	±0.02mm
Lead	21mm (ball screw lead)	21mm (ball screw lead)	12mm
Motor output	100W	100W	50W, with brake
Resolution	0.01mm		

Acceleration/deceleration time when the maximum speed is set: 0.4 sec. or over

Timing belt type

X-axis: Timing belt driven
Side mounted motor
Y-axis: Timing belt driven
Side mounted motor
Z-axis: Ball screw driven
Motor straight

Max. load capacity (kg)		Y-axis stroke			
		150mm	250mm	350mm	450mm
Z-axis stroke	50,100mm	4.0	4.0	2.5	1.5
	150,200mm	4.0	3.0	2.1	1.1
	250,300mm	4.0	3.0	1.7	0.7

R: Right-handed

The values in ( ) are applicable when the X-axis stroke is 1,100 mm or over.

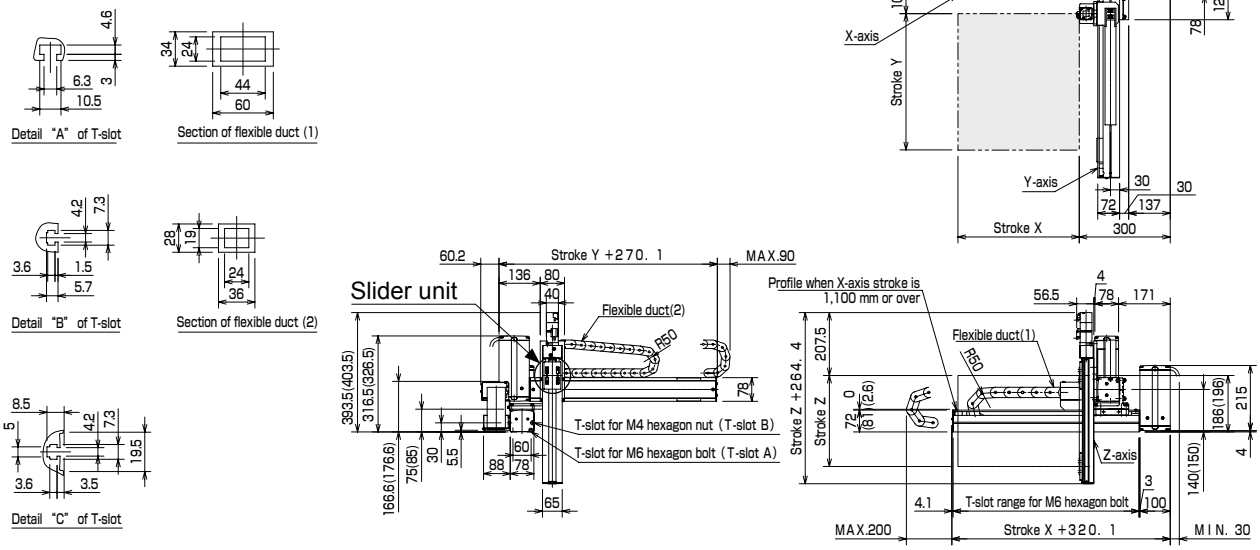

L: Left-handed

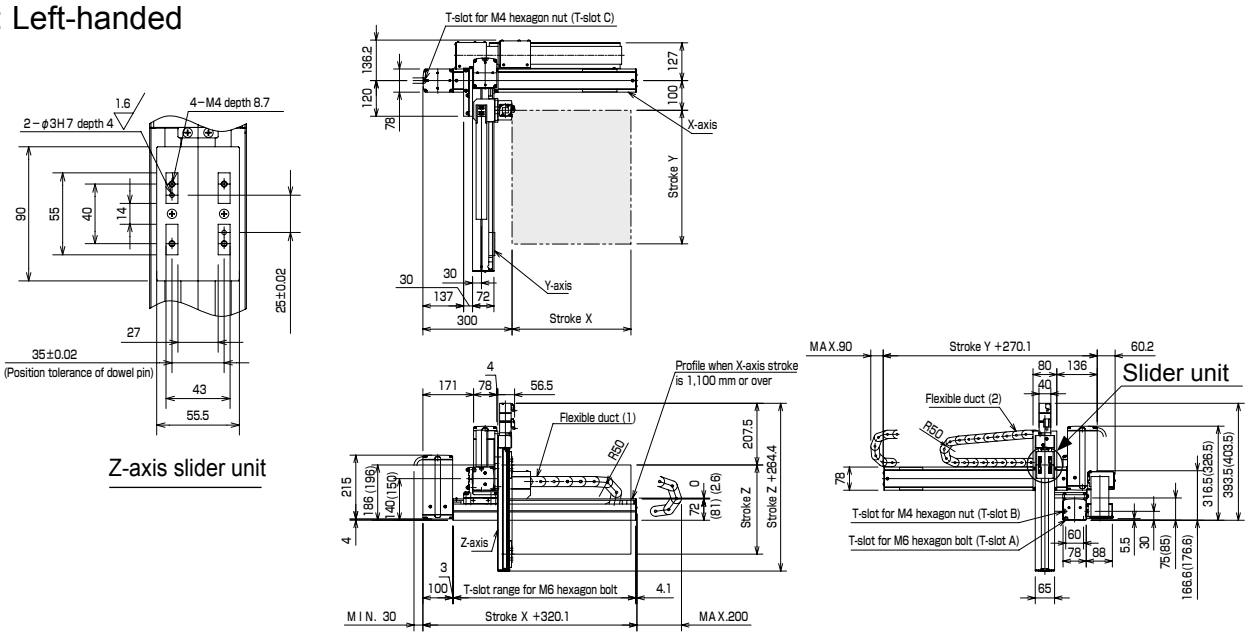

Example of Orthogonal Axes Combination: X-Y-Z Flexible duct spec

[Specifications]

	X-axis	Y-axis	Z-axis
Axis type	KBB-10F-BT-M21N-□0	KBB-10E-B□-S21N-□5	KBB-07D-ST-M12B-□□
Stroke (in increments of 100 mm for X-axis, 50 mm for Y, Z-axis)	100 to 1800mm	150 to 450mm	50 to 300mm
Max. speed	1000mm/s	1000mm/s	800mm/s
Positioning repeatability	±0.05mm	±0.05mm	±0.02mm
Lead	21mm (ball screw lead)	21mm (ball screw lead)	12mm
Motor output	200W	100W	50W, with brake
Resolution	0.01mm		

Acceleration/deceleration time when the maximum speed is set: 0.3 sec. or over

Timing belt type

X-axis: Timing belt driven
Side mounted motor
Y-axis: Timing belt driven
Side mounted motor
Z-axis: Ball screw driven
Motor straight

Max. load capacity (kg)		Y-axis stroke			
		150mm	250mm	350mm	450mm
Z-axis stroke	50,100mm	4.0	4.0	2.5	1.5
	150,200mm	4.0	3.0	2.1	1.1
	250,300mm	4.0	3.0	1.7	0.7

R: Right-handed

The values in ( ) are applicable when the X-axis stroke is 1,100 mm or over.

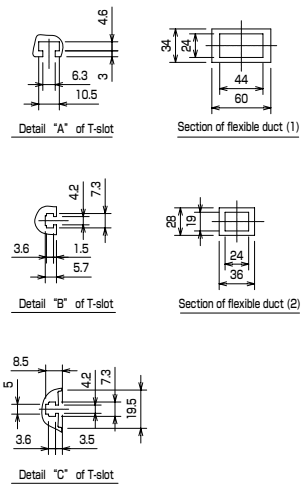

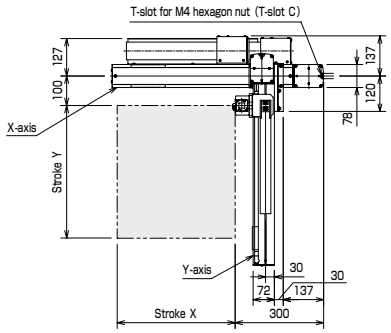

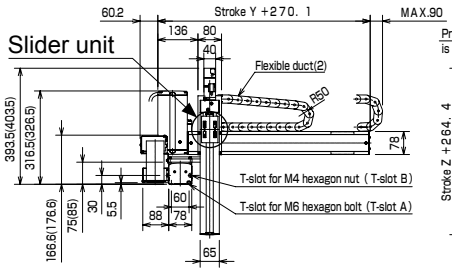

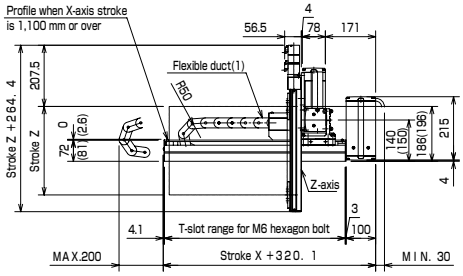

L: Left-handed

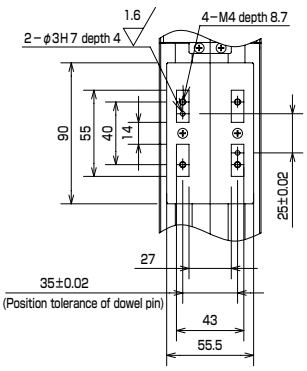

Z-axis slider unit

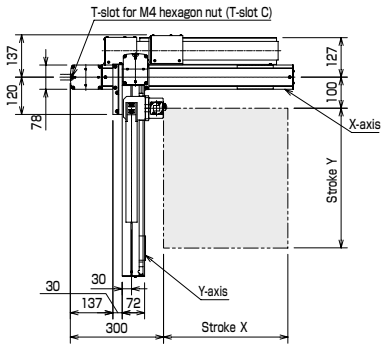

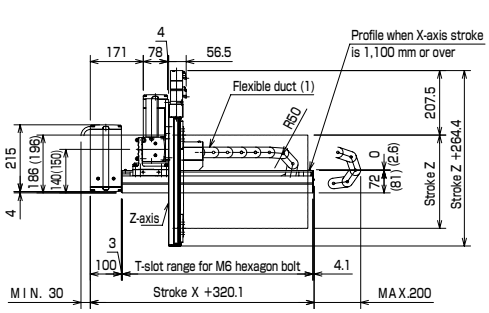

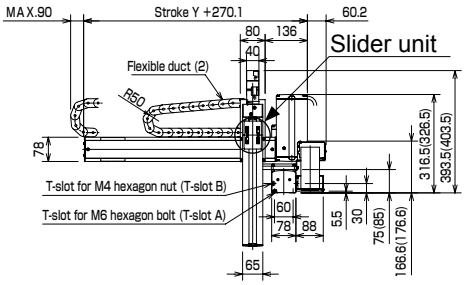

Discontinue

Example of Orthogonal Axes Combination: X-Y-Z Flexible duct spec

[Specifications]

	X-axis	Y-axis	Z-axis
Axis type	KBB-30E-BT-M21N-□0	KBB-10E-B□-S21N-□0	KBB-07D-ST-M12B-□□
Stroke (in increments of 100 mm for X, Y-axis, 50 mm for Z-axis)	100 to 2500mm	150 to 550mm	50 to 300mm
Max. speed	1000mm/s	1000mm/s	800mm/s
Positioning repeatability	±0.05mm	±0.05mm	±0.02mm
Lead	21mm (ball screw lead)	21mm (ball screw lead)	12mm
Motor output	100W	100W	50W, with brake
Resolution	0.01mm		

Acceleration/deceleration time when the maximum speed is set: 0.3 sec. or over

Timing belt type

X-axis: Timing belt driven
Side mounted motor
Y-axis: Timing belt driven
Side mounted motor
Z-axis: Ball screw driven
Motor straight

Max. load capacity (kg)		Y-axis stroke				
		150mm	250mm	350mm	450mm	550mm
Z-axis stroke	50,100mm	3.0	3.0	2.0	2.0	1.0
	150,200mm	3.0	2.0	2.0	1.0	1.0
	250,300mm	3.0	2.0	1.0	1.0	–

The values in ( ) are applicable when the X-axis stroke is 1,900 mm or over.

R: Right-handed

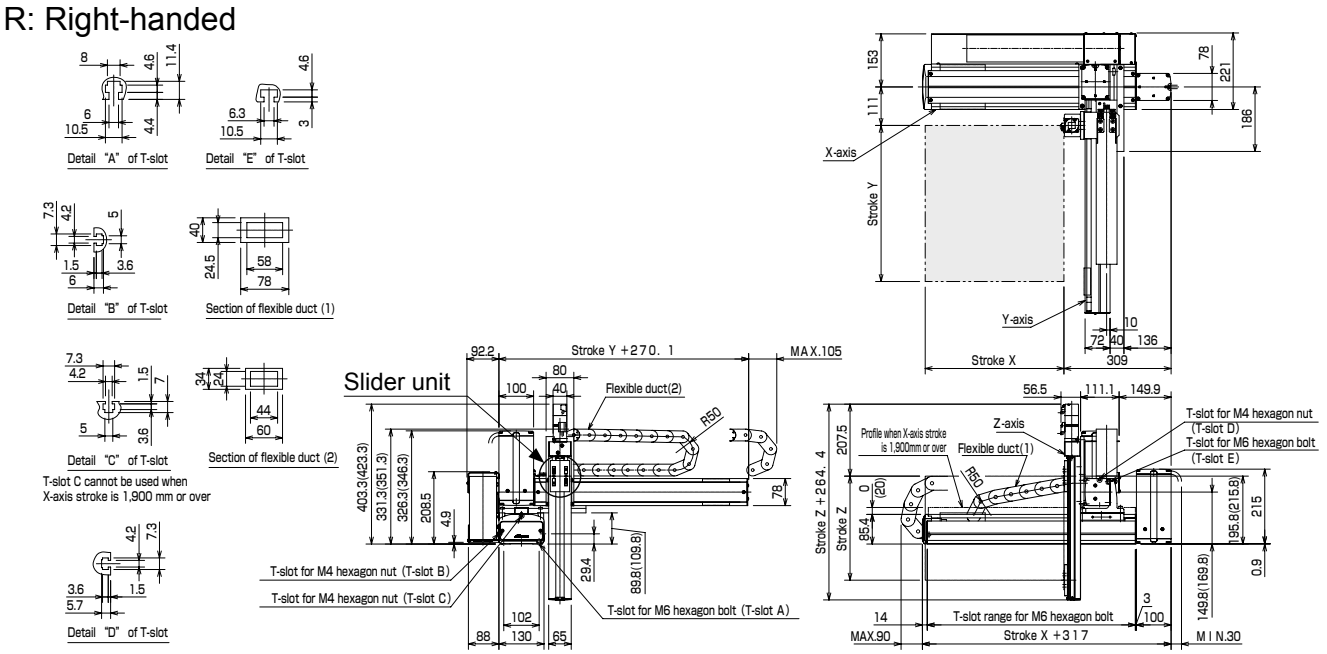

L: Left-handed

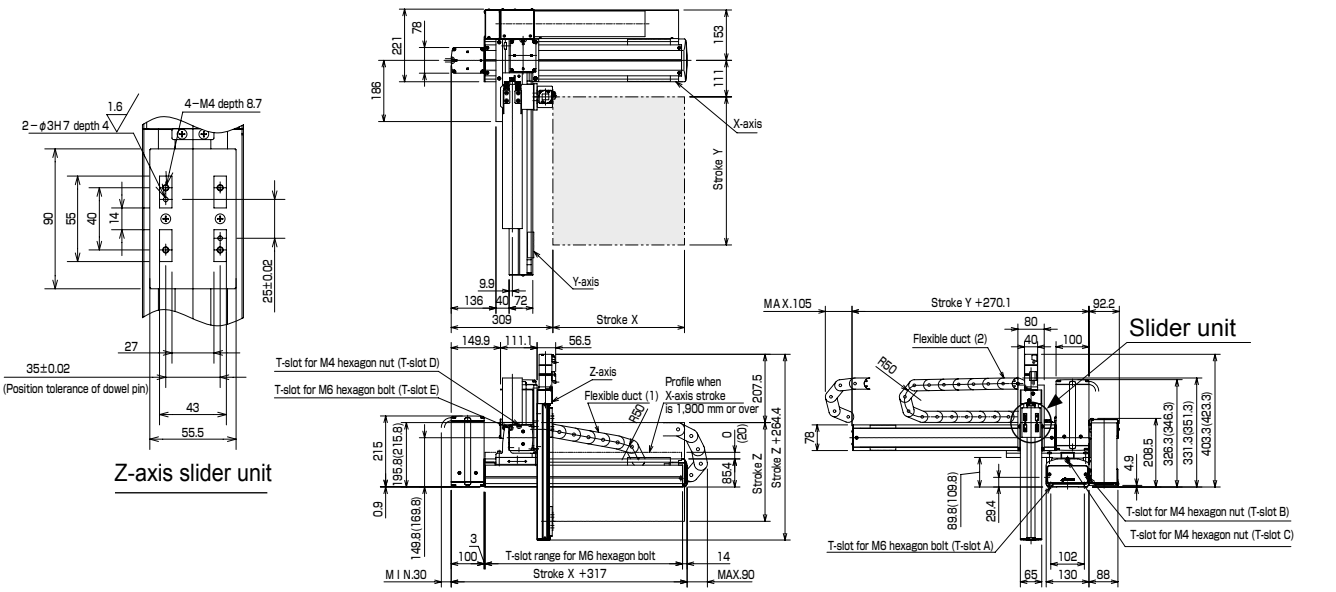

Example of Orthogonal Axes Combination: X-Y-Z Flexible duct spec

[Specifications]

	X-axis	Y-axis	Z-axis
Axis type	KBB-30F-BT-M21N-□0	KBB-10E-B□-S21N-□5	KBB-07D-ST-M12B-□□
Stroke (in increments of 100 mm for X, Y-axis, 50 mm for Z-axis)	100 to 2500mm	150 to 850mm	50 to 300mm
Max. speed	1000mm/s	1000mm/s	800mm/s
Positioning repeatability	±0.05mm	±0.05mm	±0.02mm
Lead	21mm (ball screw lead)	21mm (ball screw lead)	12mm
Motor output	200W	100W	50W, with brake
Resolution	0.01mm		

Acceleration/deceleration time when the maximum speed is set: 0.3 sec. or over

Timing belt type

X-axis: Timing belt driven
Side mounted motor
Y-axis: Timing belt driven
Side mounted motor
Z-axis: Ball screw driven
Motor straight

Max. load capacity (kg)		Y-axis stroke							
		150mm	250mm	350mm	450mm	550mm	650mm	750mm	850mm
Z-axis stroke	50,100mm	4.0	4.0	4.0	4.0	4.0	4.0	2.3	0.8
	150,200mm	4.0	4.0	4.0	4.0	4.0	3.7	2.0	0.4
	250,300mm	4.0	4.0	4.0	4.0	4.0	3.4	1.6	0.1

The values in ( ) are applicable when the X-axis stroke is 1,900 mm or less.

R: Right-handed

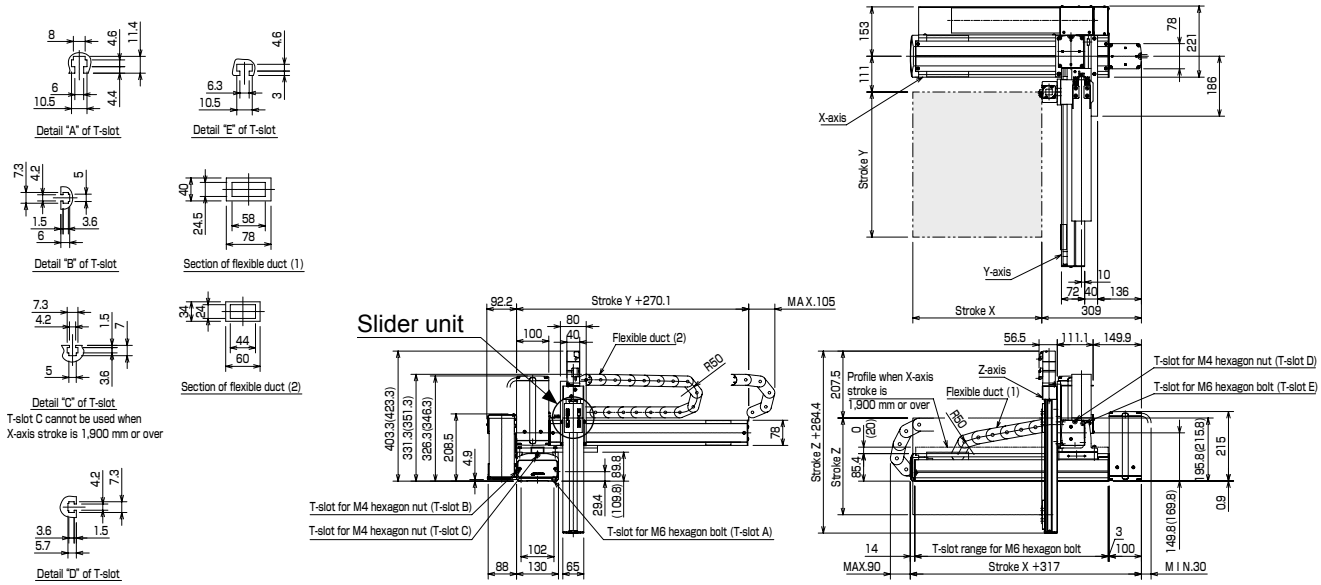

L: Left-handed

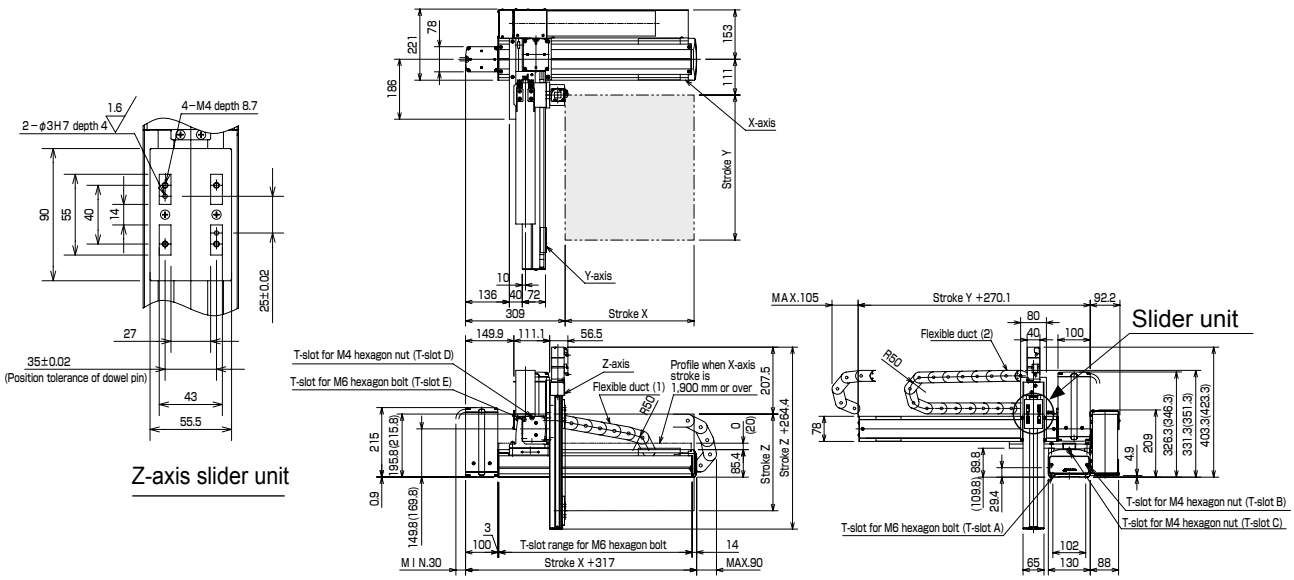

Discontinue

Example of Orthogonal Axes Combination: X-Y-Z Flexible duct spec

[Specifications]

	X-axis	Y-axis	Z-axis
Axis type	KBB-30F-BT-M21N-□0	KBB-10E-B□-M21N-□0	KBB-10E-U□-S10B-□5
Stroke (in increments of 100 mm)	100 to 2500mm	100 to 500mm	150 to 350mm
Max. speed	1000mm/s	1000mm/s	600mm/s
Positioning repeatability	±0.05mm	±0.05mm	±0.01mm
Lead	21mm (ball screw lead)	21mm (ball screw lead)	10mm
Motor output	200W	100W	100W, with brake
Resolution	0.01mm		

Acceleration/deceleration time when the maximum speed is set: 0.3 sec. or over

Timing belt type

X-axis: Timing belt driven
Side mounted motor
Y-axis: Timing belt driven
Side mounted motor
Z-axis: Ball screw driven
Side mounted motor

Max. load capacity (kg)		Y-axis stroke				
		100mm	200mm	300mm	400mm	500mm
Z-axis stroke	150mm	8.0	8.0	7.0	4.0	2.0
	250mm	7.0	7.0	6.0	4.0	1.0
	350mm	6.0	6.0	6.0	3.0	1.0

The values in ( ) are applicable when the X-axis stroke is 1,900 mm or less.

R: Right-handed

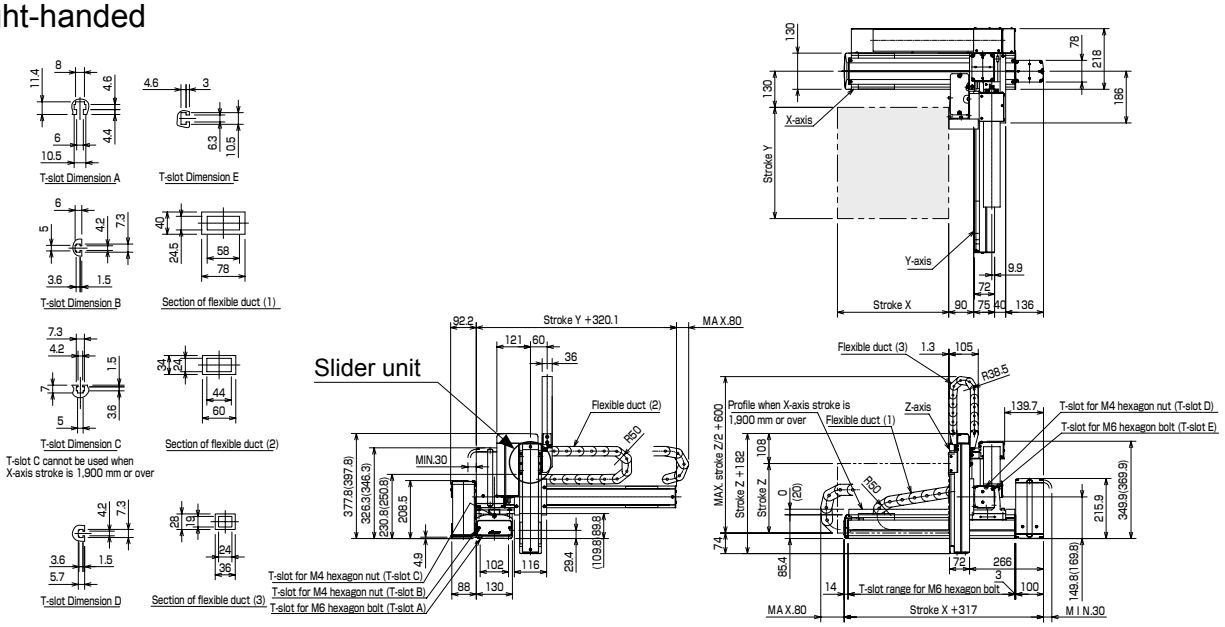

L: Left-handed

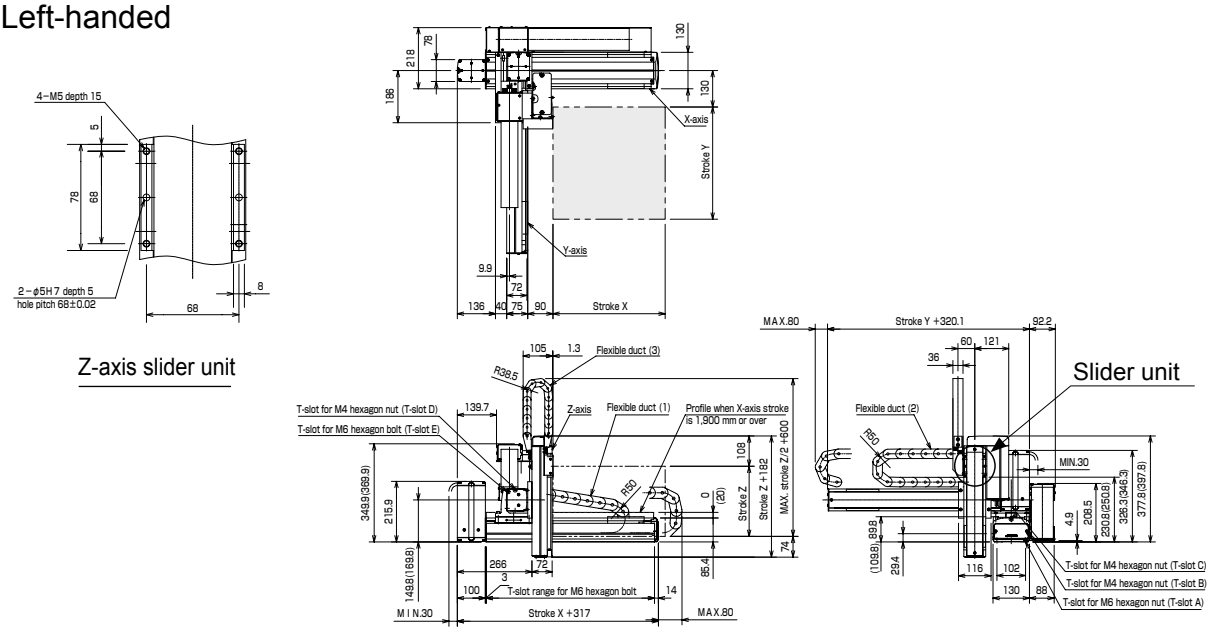

Example of Orthogonal Axes Combination: X-Y-Z Flexible duct spec

[Specifications]

	X-axis	Y-axis	Z-axis
Axis type	KBB-50F-BT-M21N-□0	KBB-30E-B□-M21N-□0	KBB-10E-U□-M05B-□0
Stroke (in increments of 100 mm)	200 to 2500mm	100 to 1000mm	100 to 300mm
Max. speed	1000mm/s	1000mm/s	300mm/s
Positioning repeatability	±0.05mm	±0.05mm	±0.01mm
Lead	21mm (ball screw lead)	21mm (ball screw lead)	5mm
Motor output	200W	100W	100W, with brake
Resolution	0.01mm		

Acceleration/deceleration time when the maximum speed is set: 0.36 sec. or over

Timing belt type

X-axis: Timing belt driven
Side mounted motor
Y-axis: Timing belt driven
Side mounted motor
Z-axis: Ball screw driven
Side mounted motor

Max. load capacity (kg)		Y-axis stroke									
		100mm	200mm	300mm	400mm	500mm	600mm	700mm	800mm	900mm	1000mm
Z-axis stroke	100mm	7.0	7.0	7.0	7.0	7.0	7.0	7.0	7.0	6.0	5.0
	200mm	7.0	7.0	7.0	7.0	7.0	7.0	7.0	7.0	5.0	4.0
	300mm	6.0	6.0	6.0	6.0	6.0	6.0	6.0	6.0	5.0	4.0

R: Right-handed

The values in ( ) are applicable when the X-axis stroke is 1,900 mm or less.

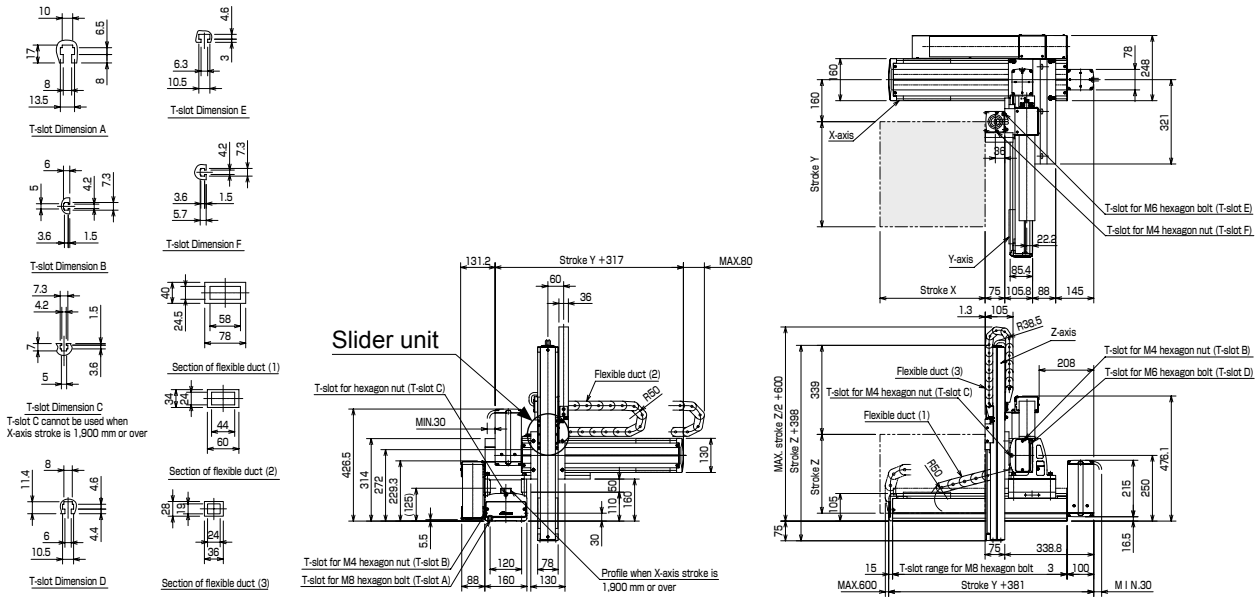

L: Left-handed

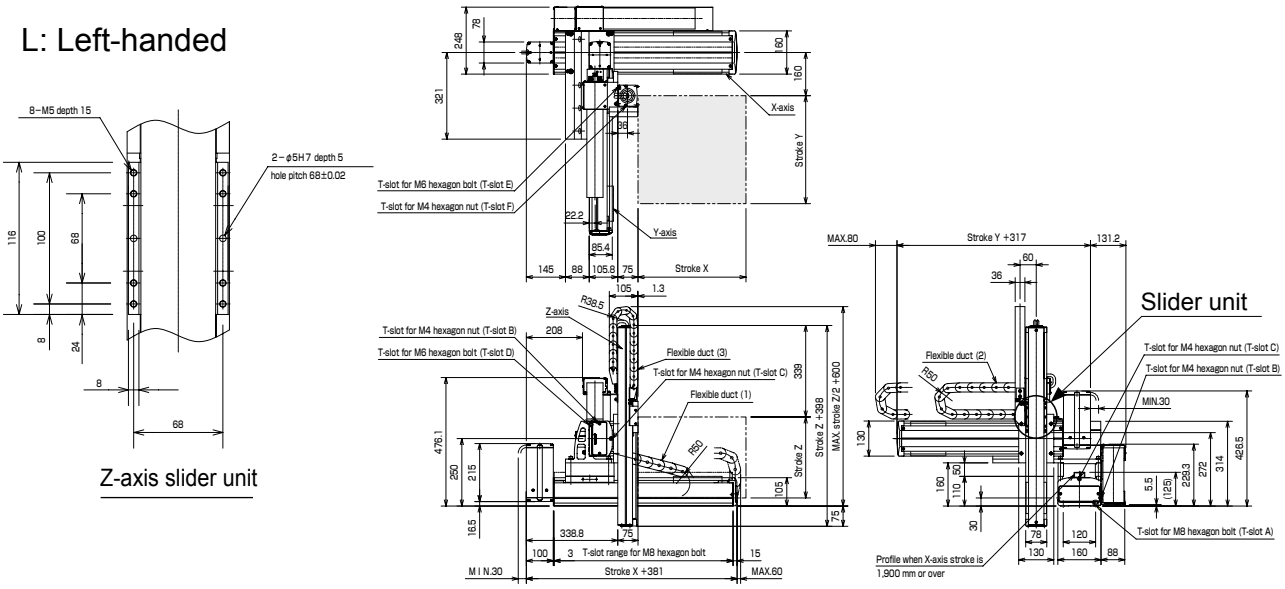

Discontinue

Example of Orthogonal Axes Combination: X-Y-Z Flexible duct spec

[Specifications]

	X-axis	Y-axis	Z-axis
Axis type	KBB-50F-BT-M21N-□0	KBB-30F-B□-M21N-□0	KBB-10E-U□-M05B-□0
Stroke (in increments of 100 mm)	200 to 2500mm	100 to 1000mm	100 to 300mm
Max. speed	1000mm/s	1000mm/s	300mm/s
Positioning repeatability	±0.05mm	±0.05mm	±0.01mm
Lead	21mm (ball screw lead)	21mm (ball screw lead)	5mm
Motor output	200W	200W	100W, with brake
Resolution	0.01mm		

Acceleration/deceleration time when the maximum speed is set: 0.4 sec. or over

Timing belt type

X-axis: Timing belt driven
Side mounted motor
Y-axis: Timing belt driven
Side mounted motor
Z-axis: Ball screw driven
Side mounted motor

Max. load capacity (kg)		Y-axis stroke									
		100mm	200mm	300mm	400mm	500mm	600mm	700mm	800mm	900mm	1000mm
Z-axis stroke	100mm	14.0	13.0	12.0	11.0	9.0	8.0	6.0	6.0	5.0	4.0
	200mm	13.0	12.0	11.0	10.0	8.0	7.0	6.0	6.0	5.0	4.0
	300mm	13.0	12.0	11.0	9.0	7.0	6.0	5.0	5.0	4.0	3.0

The values in ( ) are applicable when the X-axis stroke is 1,900 mm or less.

R: Right-handed

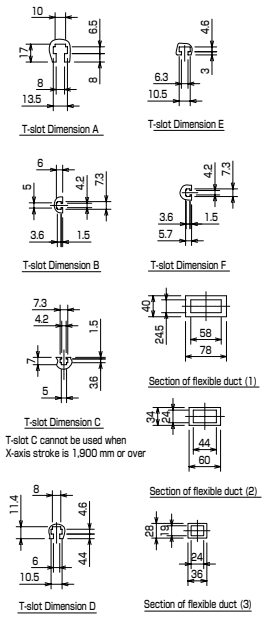

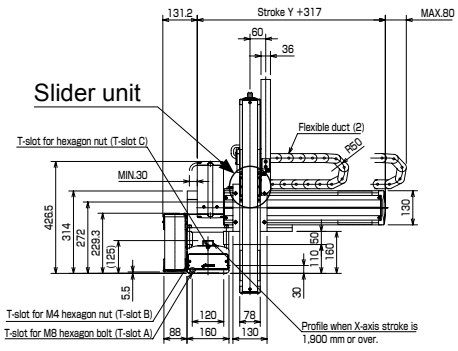

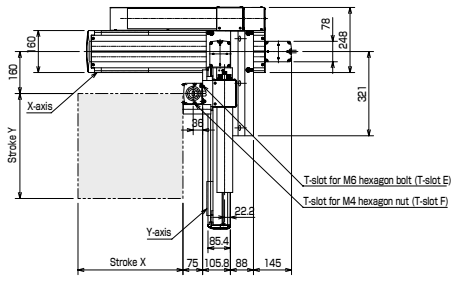

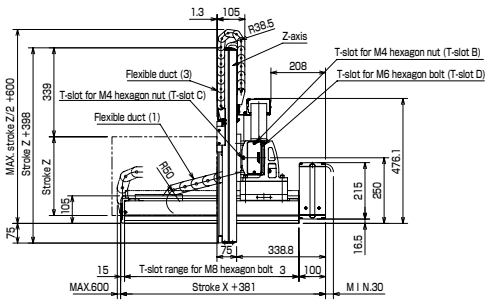

L: Left-handed

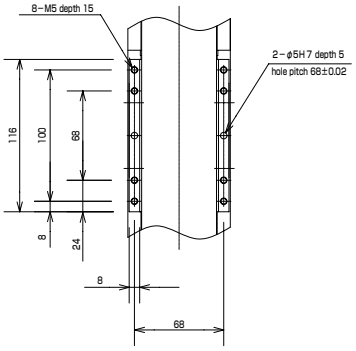

Z-axis slider unit

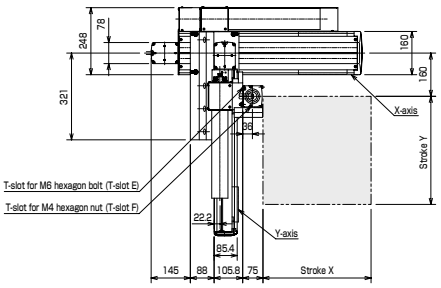

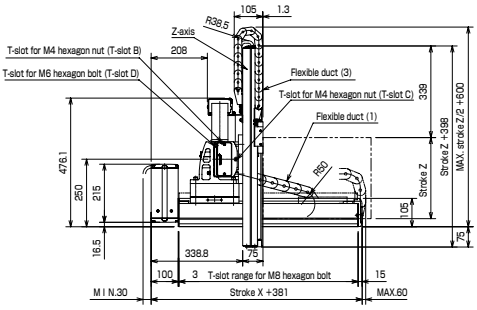

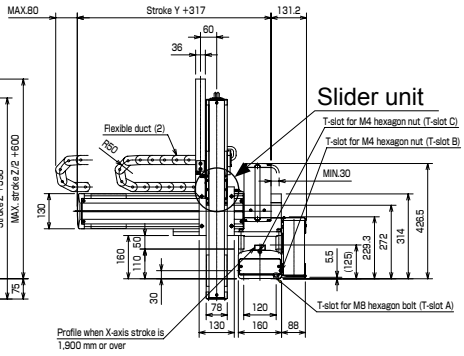

Example of Orthogonal Axes Combination: X-Y-Z-R Flexible duct spec

[Specifications]

	X-axis	Y-axis	Z-axis	R-axis
Axis type	KBB-50F-ST-M20N-□0	KBB-30E-ST-M12N-□5	KBB-10E-ST-M05B-□0	KBB-00D-RH-A
Stroke (in increments of 100 mm)	200 to 1500mm	150 to 1050mm	100 to 300mm	360°
Max. speed	1200mm/s (Note 1)	1200mm/s (Note 1)	300mm/s	360°/s
Positioning repeatability	±0.01mm	±0.01mm	±0.01mm	±0.025°
Lead	20mm	20mm	5mm	1/50 (Reduction ratio)
Motor output	200W	100W	100W, with brake	50W
Resolution	0.01mm (R-axis: 0.01 deg.)			

Acceleration/deceleration time when the maximum speed is set: 0.36 sec. or over

Harmonic drive type

X-axis: Ball screw driven Motor straight
Y-axis: Ball screw driven Motor straight
Z-axis: Ball screw driven Motor straight
R-axis: Harmonic drive

Note 1: When the stroke is as given below, the maximum speed differs.

	Stroke (mm)	Max. speed (mm/s)
X-axis	700 to 800	1100
	900 to 1000	1000
	1100 to 1200	700
	1300	500
	1400	400
	1500	300
Y-axis	750	1000
	850	800
	950 to 1050	600

Max. load capacity (kg)		Y-axis stroke									
		150mm	250mm	350mm	450mm	550mm	650mm	750mm	850mm	950mm	1050mm
Z-axis stroke	100mm	5.0	5.0	5.0	5.0	5.0	5.0	5.0	5.0	5.0	3.0
	200mm	5.0	5.0	5.0	5.0	5.0	5.0	5.0	5.0	4.0	2.0
	300mm	5.0	5.0	5.0	5.0	5.0	5.0	5.0	5.0	4.0	1.0

R: Right-handed

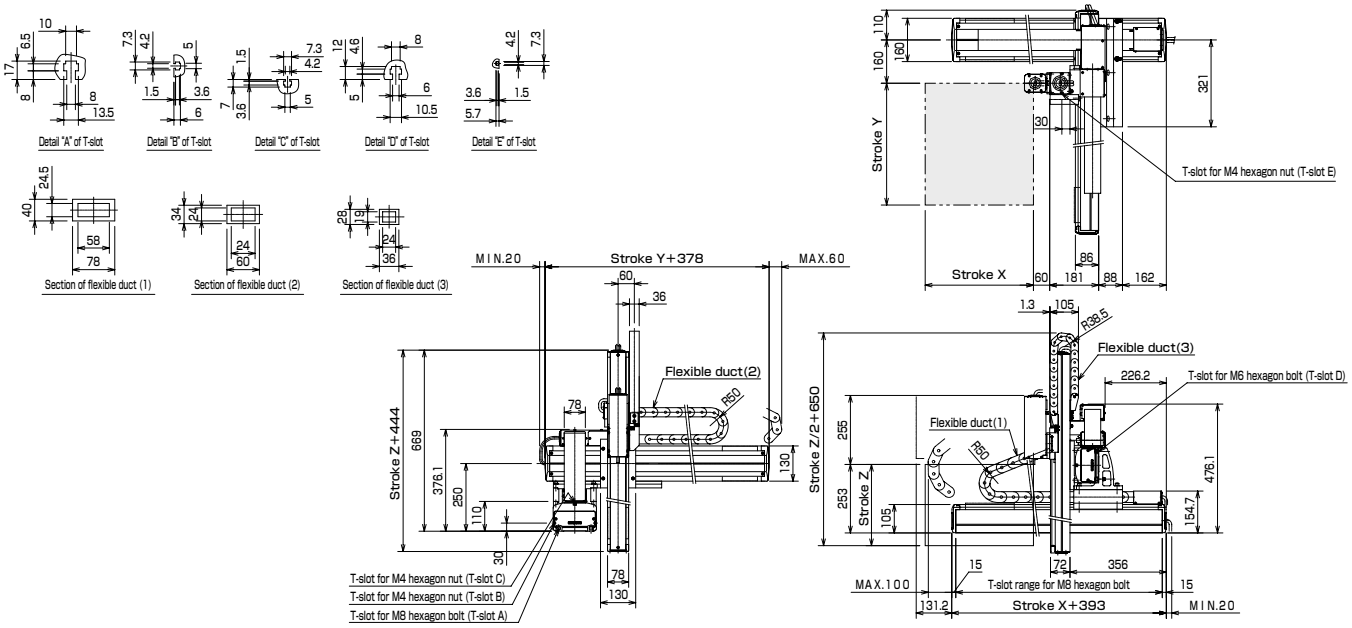

L: Left-handed

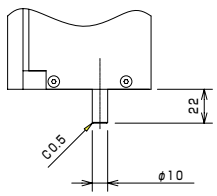

Details of R-axis

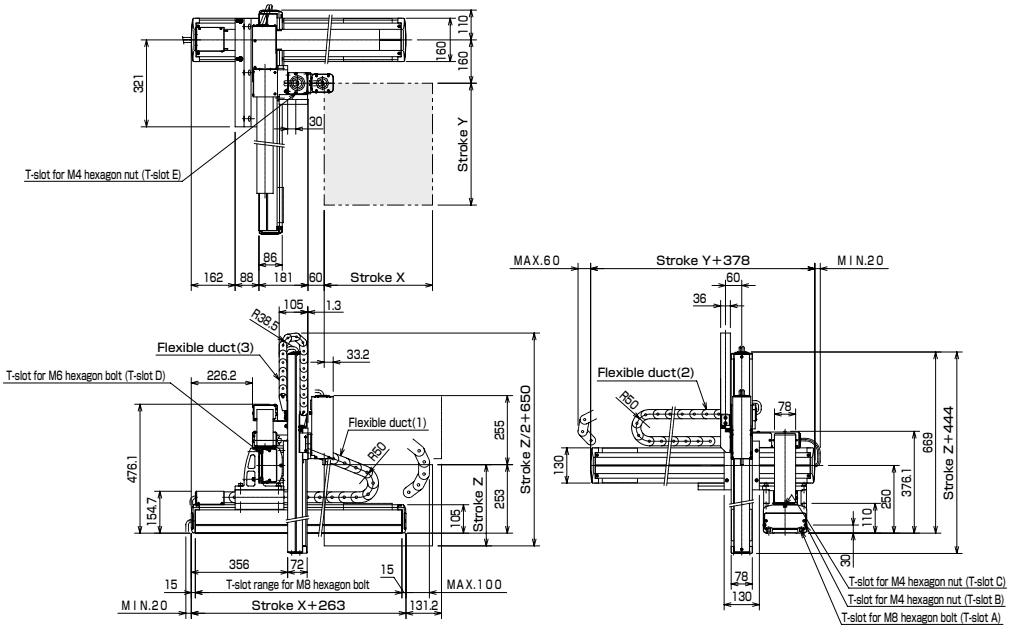

Discontinue

Example of Orthogonal Axes Combination: X-Y-Z-R Flexible duct spec Space-saving type

[Specifications]

	X-axis	Y-axis	Z-axis	R-axis
Axis type	KBB-50F-U□-M20N-□0	KBB-30E-ST-M20N-□5	KBB-10E-ST-M05B-□0	KBB-00D-RH-A
Stroke (in increments of 100 mm)	200 to 1500mm	150 to 1050mm	100 to 300mm	360°
Max. speed	1200mm/s (Note 1)	1200mm/s (Note 1)	300mm/s	360°/s
Positioning repeatability	±0.01mm	±0.01mm	±0.01mm	±0.025°
Lead	20mm	20mm	5mm	1/50 (Reduction ratio)
Motor output	200W	100W	100W, with brake	50W
Resolution	0.01mm (R-axis: 0.01 deg.)			

Acceleration/deceleration time when the maximum speed is set: 0.36 sec. or over

Harmonic drive type

X-axis: Ball screw driven Side mounted motor
Y-axis: Ball screw driven Motor straight
Z-axis: Ball screw driven Motor straight
R-axis: Harmonic drive

Note 1: When the stroke is as given below, the maximum speed differs.

	Stroke (mm)	Max. speed (mm/s)
X-axis	700 to 800	1100
	900 to 1000	1000
	1100 to 1200	700
	1300	500
	1400	400
	1500	300
Y-axis	750	1000
	850	800
	950 to 1050	600

Max. load capacity (kg)		Y-axis stroke									
		150mm	250mm	350mm	450mm	550mm	650mm	750mm	850mm	950mm	1050mm
Z-axis stroke	100mm	5.0	5.0	5.0	5.0	5.0	5.0	5.0	5.0	5.0	3.0
	200mm	5.0	5.0	5.0	5.0	5.0	5.0	5.0	5.0	4.0	2.0
	300mm	5.0	5.0	5.0	5.0	5.0	5.0	5.0	5.0	4.0	1.0

R: Right-handed

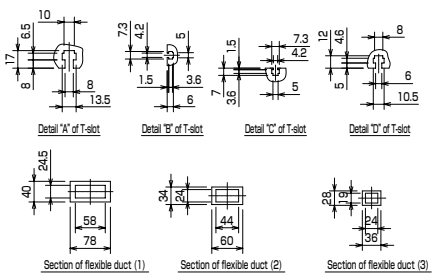

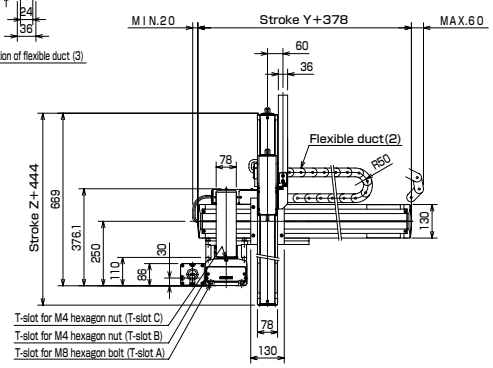

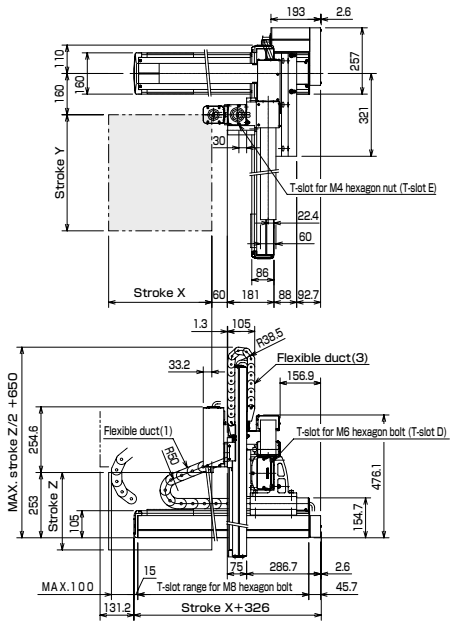

L: Left-handed

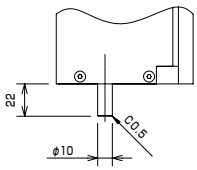

Details of R-axis

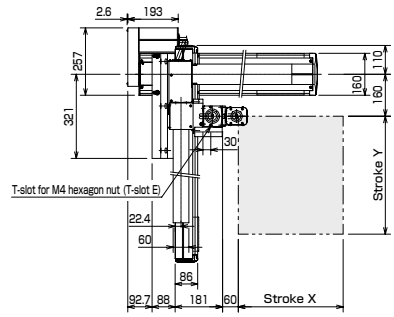

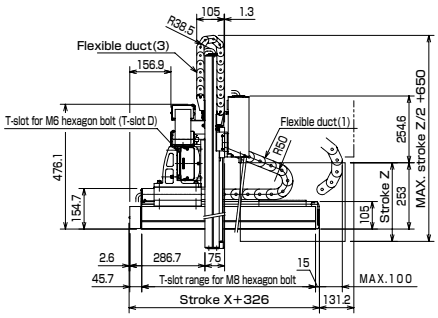

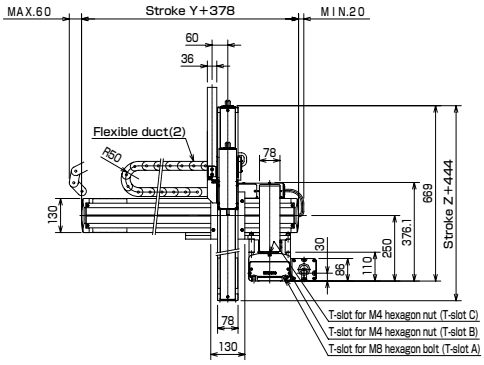

Example of Orthogonal Axes Combination: X-Y-Z-R Flexible duct spec

[Specifications]

	X-axis	Y-axis	Z-axis	R-axis
Axis type	KBB-50F-ST-M20N-□0	KBB-30F-ST-M20N-□0	KBB-10E-ST-M05B-□0	KBB-00D-RH-A
Stroke (in increments of 100 mm)	200 to 1500mm	100 to 1000mm	100 to 300mm	360°
Max. speed	1200mm/s (Note 1)	1200mm/s (Note 1)	300mm/s	360°/s
Positioning repeatability	±0.01mm	±0.01mm	±0.01mm	±0.025°
Lead	20mm	20mm	5mm	1/50 (Reduction ratio)
Motor output	200W	200W	100W, with brake	50W
Resolution	0.01mm (R-axis: 0.01 deg.)			

Acceleration/deceleration time when the maximum speed is set: 0.36 sec. or over

Harmonic drive type

X-axis: Ball screw driven Motor straight
Y-axis: Ball screw driven Motor straight
Z-axis: Ball screw driven Motor straight
R-axis: Harmonic drive

Note 1: When the stroke is as given below, the maximum speed differs.

	Stroke (mm)	Max. speed (mm/s)
X-axis	700 to 800	1100
	900 to 1000	1000
	1100 to 1200	700
	1300	500
	1400	400
	1500	300
Y-axis	700	1000
	8500	800
	900 to 1000	600

Max. load capacity (kg)		Y-axis stroke									
		150mm	250mm	350mm	450mm	550mm	650mm	750mm	850mm	950mm	1050mm
Z-axis stroke	100mm	5.0	5.0	5.0	5.0	5.0	5.0	5.0	5.0	5.0	3.0
	200mm	5.0	5.0	5.0	5.0	5.0	5.0	5.0	5.0	5.0	2.0
	300mm	5.0	5.0	5.0	5.0	5.0	5.0	5.0	5.0	4.0	1.0

R: Right-handed

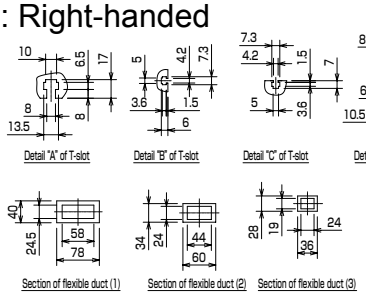

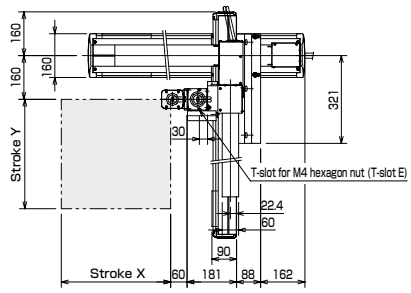

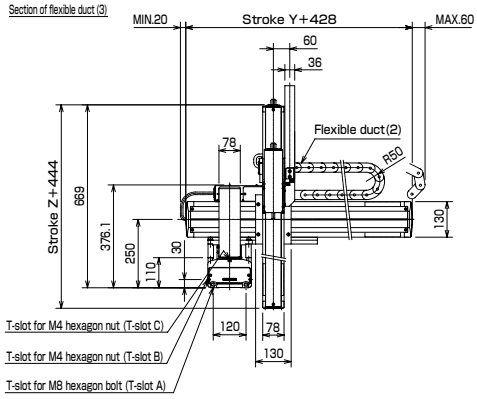

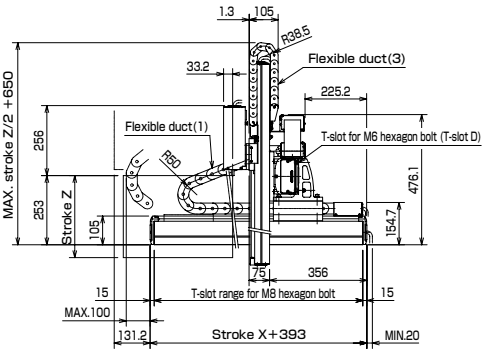

L: Left-handed

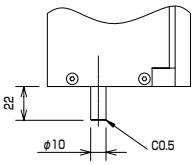

Details of R-axis

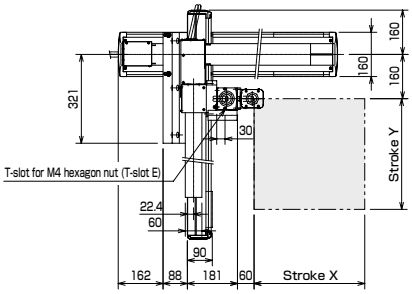

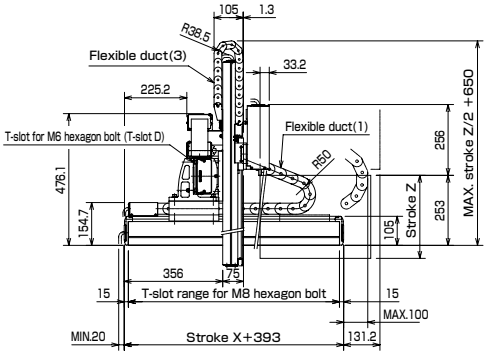

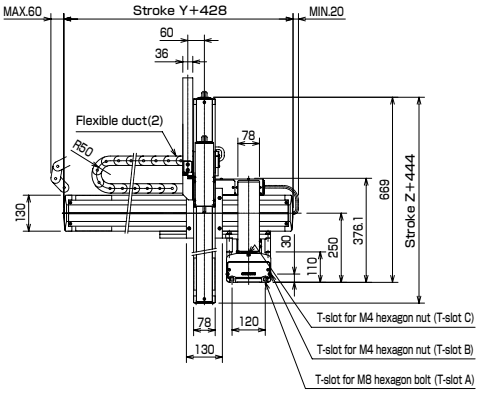

Discontinue

Example of Orthogonal Axes Combination: X-Y-Z-R Flexible duct spec Space-saving type

[Specifications]

	X-axis	Y-axis	Z-axis	R-axis
Axis type	KBB-50F-U□-M20N-□0	KBB-30F-ST-M20N-□0	KBB-10E-ST-M05B-□0	KBB-00D-RH-A
Stroke (in increments of 100 mm)	200 to 1500mm	100 to 1000mm	100 to 300mm	360°
Max. speed	1200mm/s (Note 1)	1200mm/s (Note 1)	300mm/s	360°/s
Positioning repeatability	±0.01mm	±0.01mm	±0.01mm	±0.025°
Lead	20mm	20mm	5mm	1/50 (Reduction ratio)
Motor output	200W	200W	100W, with brake	50W
Resolution	0.01mm (R-axis: 0.01 deg.)			

Acceleration/deceleration time when the maximum speed is set: 0.36 sec. or over

Harmonic drive type

X-axis: Ball screw driven Side mounted motor
Y-axis: Ball screw driven Motor straight
Z-axis: Ball screw driven Motor straight
R-axis: Harmonic drive

Note 1: When the stroke is as given below, the maximum speed differs.

	Stroke (mm)	Max. speed (mm/s)
X-axis	700 to 800	1100
	900 to 1000	1000
	1100 to 1200	700
	1300	500
	1400	400
	1500	300
Y-axis	700	1000
	8500	800
	900 to 1000	600

Max. load capacity (kg)		Y-axis stroke									
		100mm	200mm	300mm	400mm	500mm	600mm	700mm	800mm	900mm	1000mm
Z-axis stroke	100mm	5.0	5.0	5.0	5.0	5.0	5.0	5.0	5.0	5.0	3.0
	200mm	5.0	5.0	5.0	5.0	5.0	5.0	5.0	5.0	5.0	2.0
	300mm	5.0	5.0	5.0	5.0	5.0	5.0	5.0	5.0	4.0	1.0

R: Right-handed

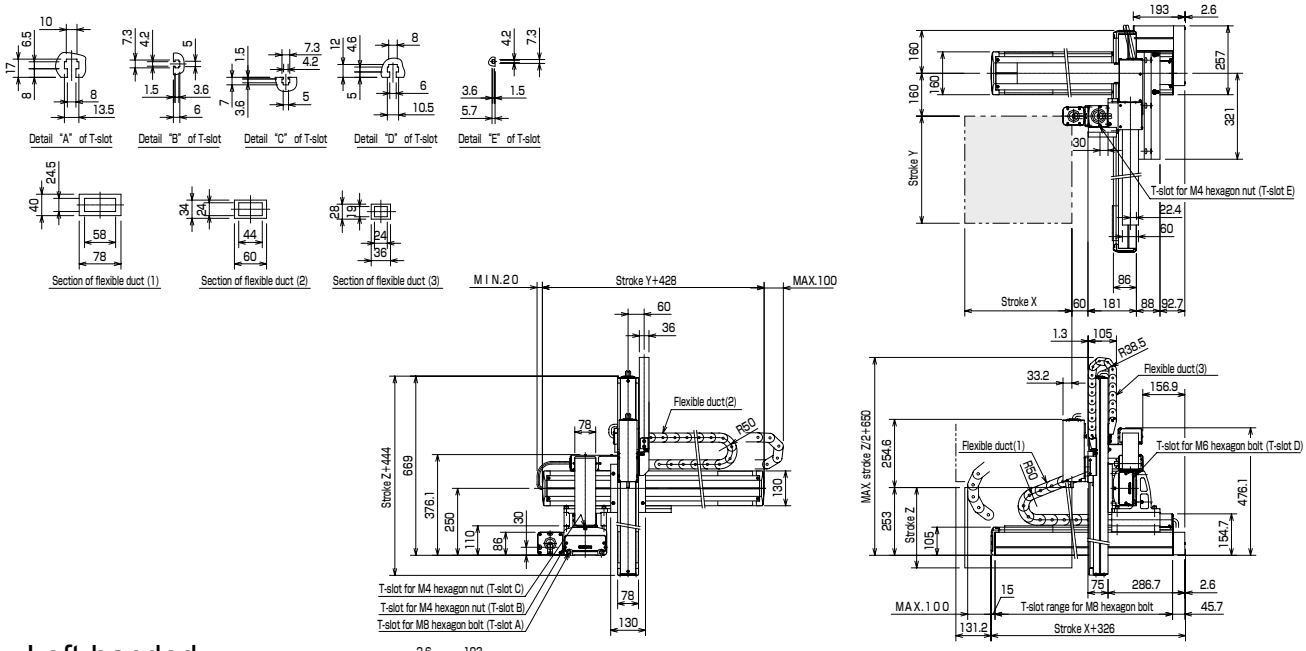

L: Left-handed

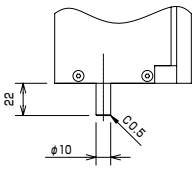

Details of R-axis

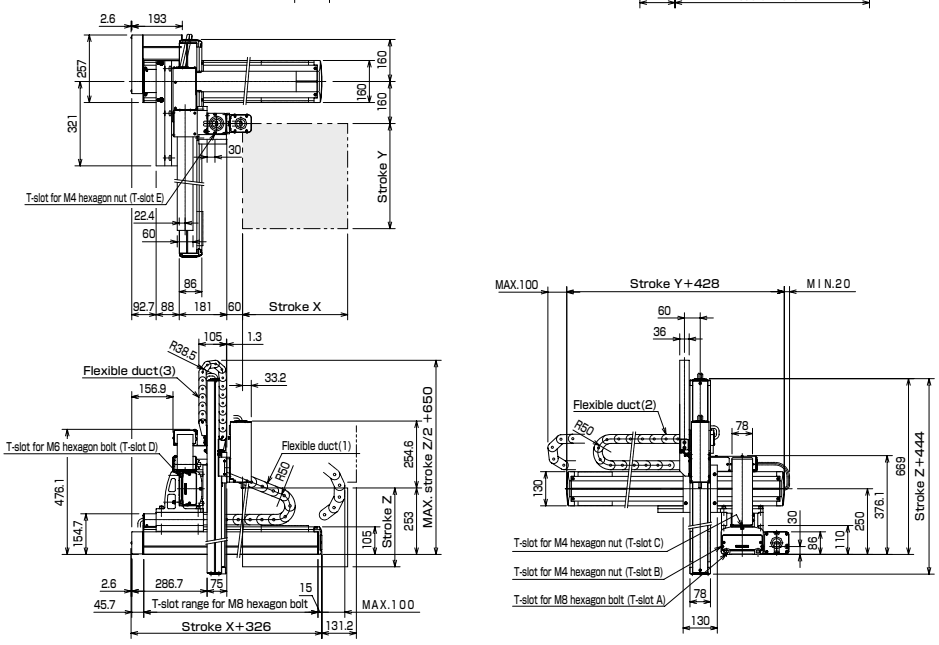

Example of Orthogonal Axes Combination: X-Y-Z-R Flexible duct spec

[Specifications]

	X-axis	Y-axis	Z-axis	R-axis
Axis type	KBB-50F-ST-M20N-□0	KBB-30E-ST-M20N-□5	KBB-10E-ST-M05B-□0	KBB-00D-RP-A
Stroke (in increments of 100 mm)	200 to 1500mm	150 to 1050mm	100 to 300mm	360°
Max. speed	1200mm/s (Note 1)	1200mm/s (Note 1)	300mm/s	857°/s
Positioning repeatability	±0.01mm	±0.01mm	±0.01mm	±0.125°
Lead	20mm	20mm	5mm	1/21 (Reduction ratio)
Motor output	200W	100W	100W, with brake	50W
Resolution	0.01mm (R-axis: 0.01 deg.)			

Acceleration/deceleration time when the maximum speed is set: 0.36 sec. or over

Planet gear type

X-axis: Ball screw driven Motor straight
Y-axis: Ball screw driven Motor straight
Z-axis: Ball screw driven Motor straight
R-axis: Planet gear

Note 1: When the stroke is as given below, the maximum speed differs.

	Stroke (mm)	Max. speed (mm/s)
X-axis	700 to 800	1100
	900 to 1000	1000
	1100 to 1200	700
	1300	500
	1400	400
	1500	300
Y-axis	750	1000
	850	800
	950 to 1050	600

Max. load capacity (kg)		Y-axis stroke									
		150mm	250mm	350mm	450mm	550mm	650mm	750mm	850mm	950mm	1050mm
Z-axis stroke	100mm	8.0	8.0	8.0	8.0	8.0	8.0	8.0	7.0	5.0	3.0
	200mm	6.0	6.0	6.0	6.0	6.0	6.0	6.0	6.0	4.0	2.0
	300mm	5.0	5.0	5.0	5.0	5.0	5.0	5.0	5.0	4.0	1.0

R: Right-handed

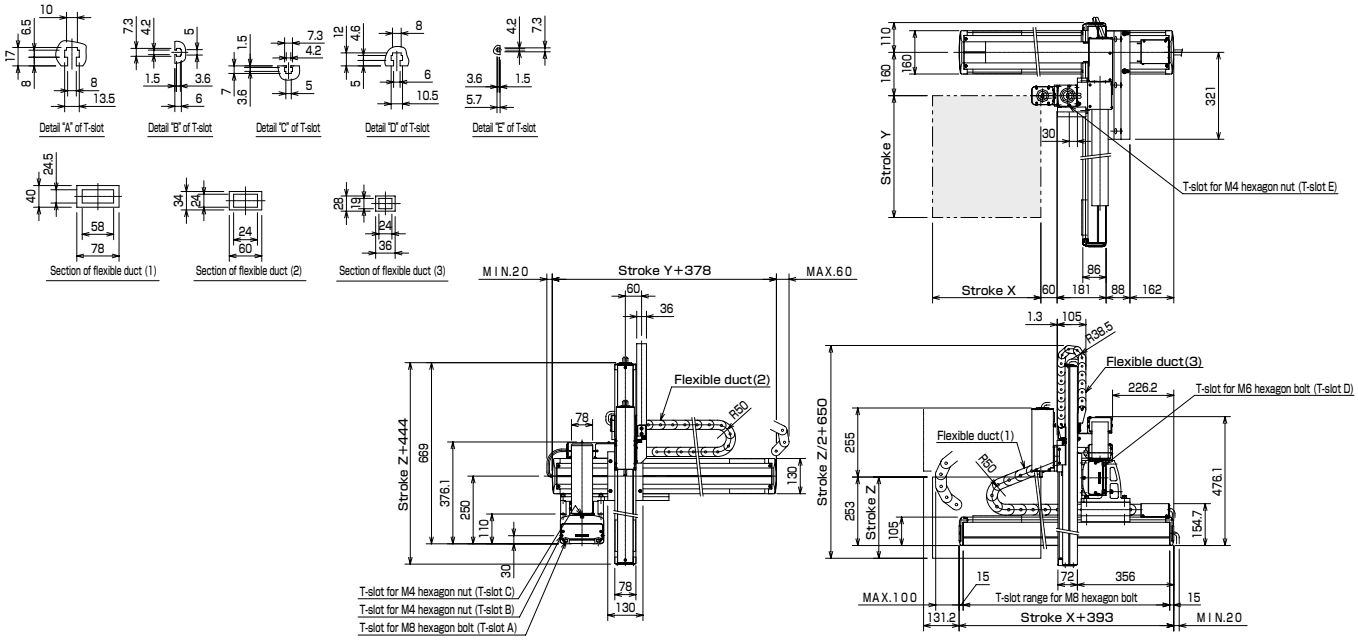

L: Left-handed

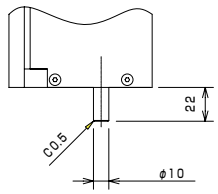

Details of R-axis

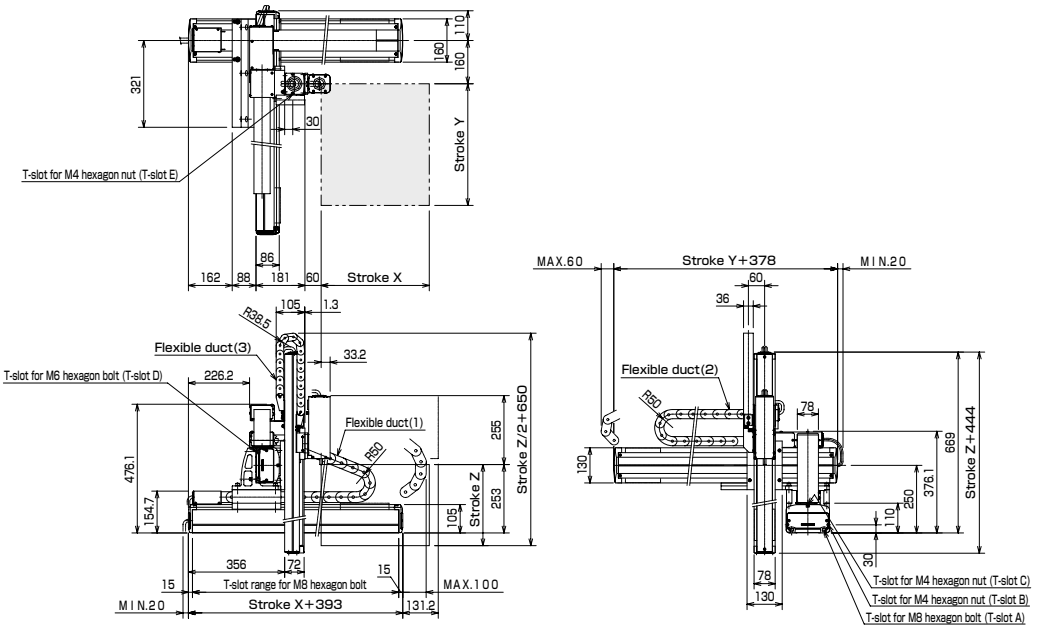

Discontinue

Example of Orthogonal Axes Combination: X-Y-Z-R Flexible duct spec Space-saving type

[Specifications]

	X-axis	Y-axis	Z-axis	R-axis
Axis type	KBB-50F-U□-M20N-□0	KBB-30F-ST-M20N-□0	KBB-10E-ST-M05B-□0	KBB-00D-RP-A
Stroke (in increments of 100 mm)	200 to 1500mm	150 to 1050mm	100 to 300mm	360°
Max. speed	1200mm/s (Note 1)	1200mm/s (Note 1)	300mm/s	857°/s
Positioning repeatability	±0.01mm	±0.01mm	±0.01mm	±0.125°
Lead	20mm	20mm	5mm	1/21 (Reduction ratio)
Motor output	200W	100W	100W, with brake	50W
Resolution	0.01mm (R-axis: 0.01 deg.)			

Acceleration/deceleration time when the maximum speed is set: 0.36 sec. or over

Planet gear type

X-axis: Ball screw driven Side mounted motor
Y-axis: Ball screw driven Motor straight
Z-axis: Ball screw driven Motor straight
R-axis: Planet gear

Note 1: When the stroke is as given below, the maximum speed differs.

	Stroke (mm)	Max. speed (mm/s)
X-axis	700 to 800	1100
	900 to 1000	1000
	1100 to 1200	700
	1300	500
	1400	400
	1500	300
Y-axis	750	1000
	850	800
	950 to 1050	600

Max. load capacity (kg)		Y-axis stroke									
		150mm	250mm	350mm	450mm	550mm	650mm	750mm	850mm	950mm	1050mm
Z-axis stroke	100mm	8.0	8.0	8.0	8.0	8.0	8.0	8.0	7.0	5.0	3.0
	200mm	6.0	6.0	6.0	6.0	6.0	6.0	6.0	6.0	4.0	2.0
	300mm	5.0	5.0	5.0	5.0	5.0	5.0	5.0	5.0	4.0	1.0

R: Right-handed

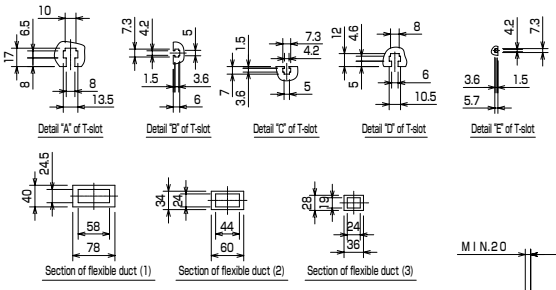

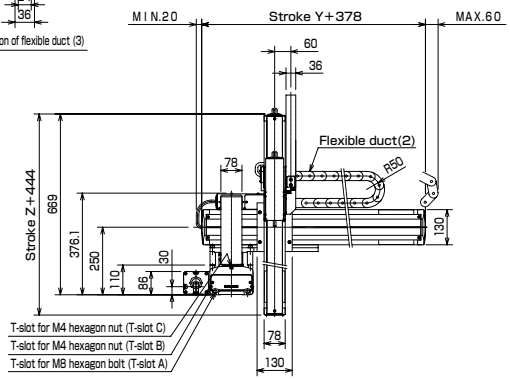

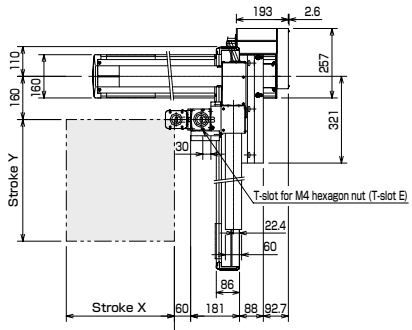

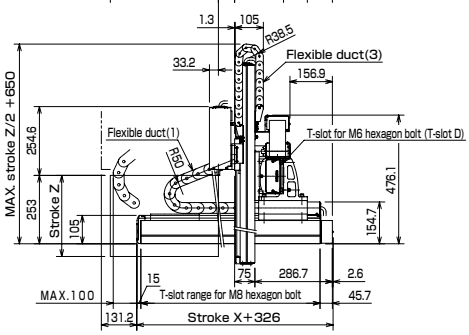

L: Left-handed

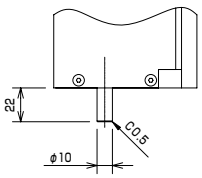

Details of R-axis

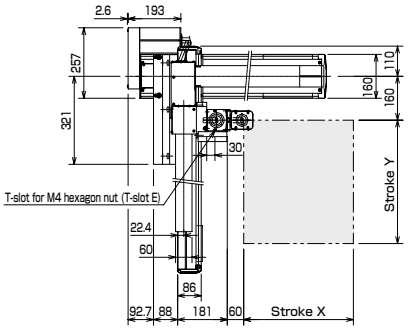

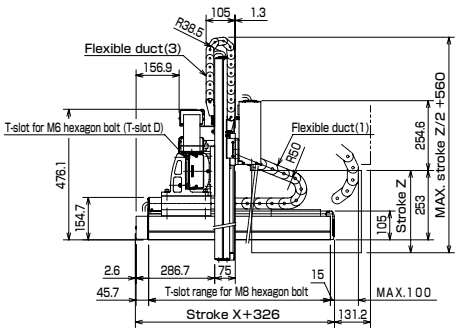

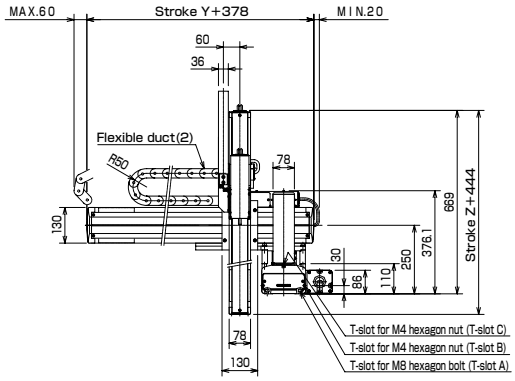

Example of Orthogonal Axes Combination: X-Y-Z-R Flexible duct spec

[Specifications]

	X-axis	Y-axis	Z-axis	R-axis
Axis type	KBB-50F-ST-M20N-□0	KBB-30F-ST-M20N-□0	KBB-10E-ST-M05B-□0	KBB-00D-RP-A
Stroke (in increments of 100 mm)	200 to 1500mm	100 to 1000mm	100 to 300mm	360°
Max. speed	1200mm/s (Note 1)	1200mm/s (Note 1)	300mm/s	857°/s
Positioning repeatability	±0.01mm	±0.01mm	±0.01mm	±0.025°
Lead	20mm	20mm	5mm	1/21 (Reduction ratio)
Motor output	200W	200W	100W, with brake	50W
Resolution	0.01mm (R-axis: 0.01 deg.)			

Acceleration/deceleration time when the maximum speed is set: 0.36 sec. or over

Planet gear type

X-axis: Ball screw driven Motor straight
Y-axis: Ball screw driven Motor straight
Z-axis: Ball screw driven Motor straight
R-axis: Planet gear

Note 1: When the stroke is as given below, the maximum speed differs.

	Stroke (mm)	Max. speed (mm/s)
X-axis	700 to 800	1100
	900 to 1000	1000
	1100 to 1200	700
	1300	500
	1400	400
	1500	300
Y-axis	700	1000
	8500	800
	900 to 1000	600

Max. load capacity (kg)		Y-axis stroke									
		100mm	200mm	300mm	400mm	500mm	600mm	700mm	800mm	900mm	1000mm
Z-axis stroke	100mm	10.0	10.0	10.0	10.0	10.0	10.0	10.0	8.0	5.0	3.0
	200mm	10.0	10.0	10.0	10.0	10.0	10.0	10.0	7.0	5.0	2.0
	300mm	10.0	10.0	10.0	10.0	10.0	10.0	10.0	7.0	4.0	2.0

R: Right-handed

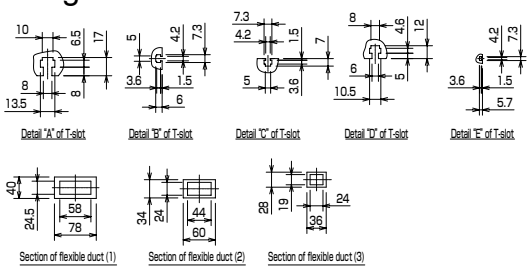

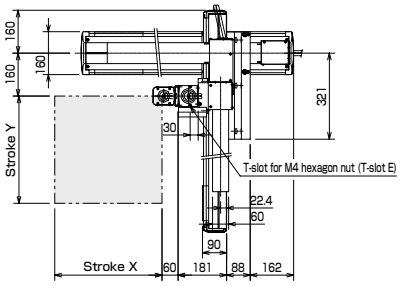

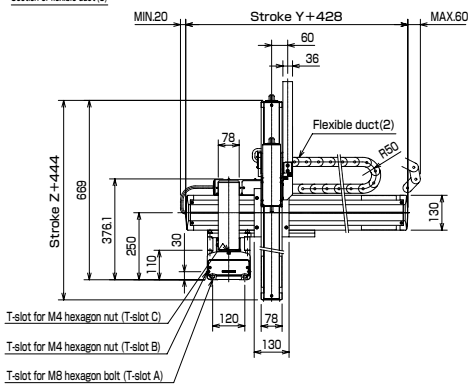

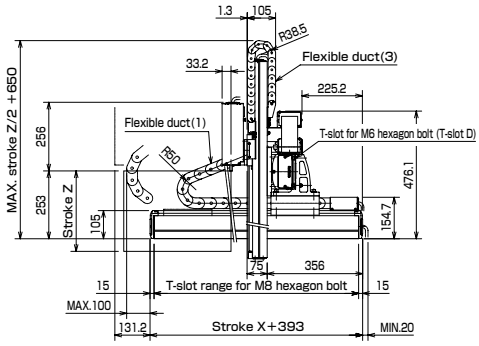

L: Left-handed

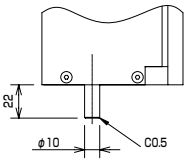

Details of R-axis

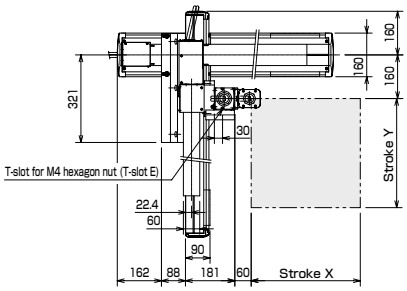

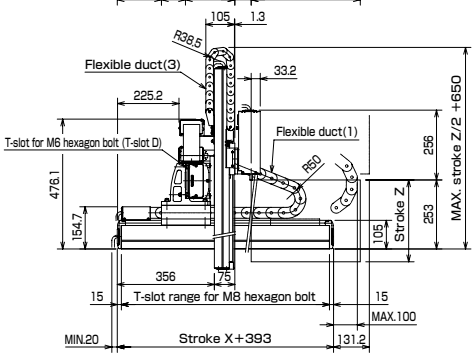

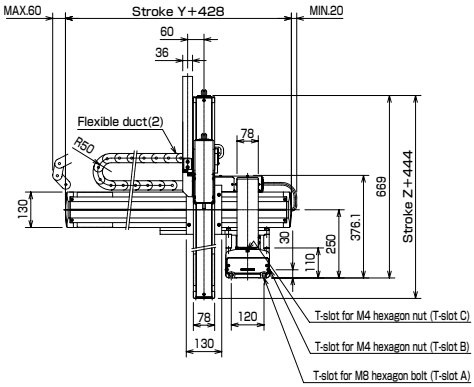

Discontinue

Example of Orthogonal Axes Combination: X-Y-Z-R Flexible duct spec Space-saving type

[Specifications]

	X-axis	Y-axis	Z-axis	R-axis
Axis type	KBB-50F-U-M20N-□0	KBB-30F-ST-M20N-□0	KBB-10E-ST-M05B-□0	KBB-00D-RP-A
Stroke (in increments of 100 mm)	200 to 1500mm	100 to 1000mm	100 to 300mm	360°
Max. speed	1200mm/s (Note 1)	1200mm/s (Note 1)	300mm/s	857°/s
Positioning repeatability	±0.01mm	±0.01mm	±0.01mm	±0.125°
Lead	20mm	20mm	5mm	1/21 (Reduction ratio)
Motor output	200W	200W	100W, with brake	50W
Resolution	0.01mm (R-axis: 0.01 deg.)			

Acceleration/deceleration time when the maximum speed is set: 0.36 sec. or over

Planet gear type

X-axis: Ball screw driven Side mounted motor
Y-axis: Ball screw driven Motor straight
Z-axis: Ball screw driven Motor straight
R-axis: Planet gear

Note 1: When the stroke is as given below, the maximum speed differs.

	Stroke (mm)	Max. speed (mm/s)
X-axis	700 to 800	1100
	900 to 1000	1000
	1100 to 1200	700
	1300	500
	1400	400
	1500	300
Y-axis	700	1000
	8500	800
	900 to 1000	600

Max. load capacity (kg)		Y-axis stroke									
		100mm	200mm	300mm	400mm	500mm	600mm	700mm	800mm	900mm	1000mm
Z-axis stroke	100mm	10.0	10.0	10.0	10.0	10.0	10.0	10.0	8.0	5.0	3.0
	200mm	10.0	10.0	10.0	10.0	10.0	10.0	10.0	7.0	5.0	2.0
	300mm	10.0	10.0	10.0	10.0	10.0	10.0	10.0	7.0	4.0	2.0

R: Right-handed

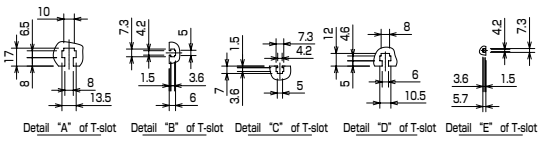

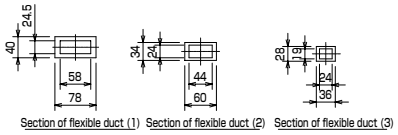

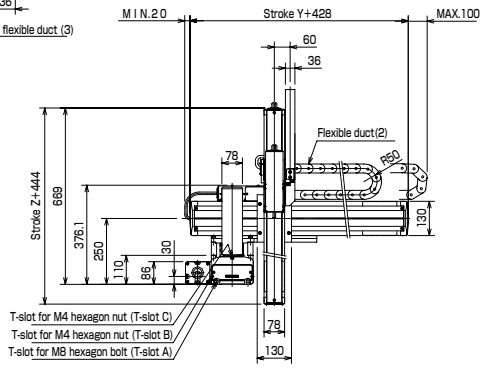

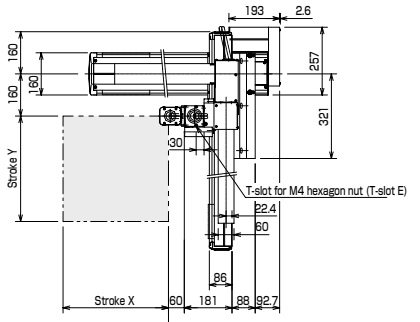

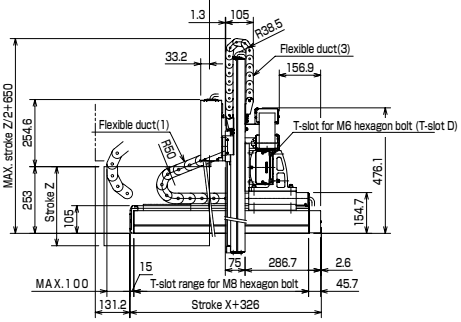

L: Left-handed

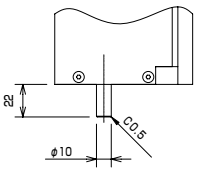

Details of R-axis

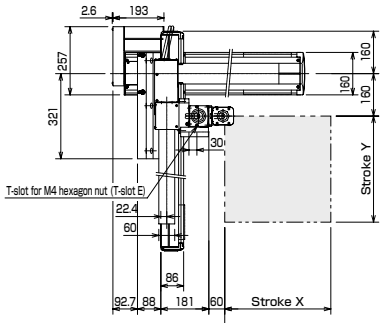

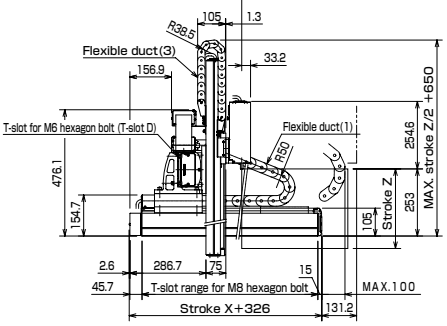

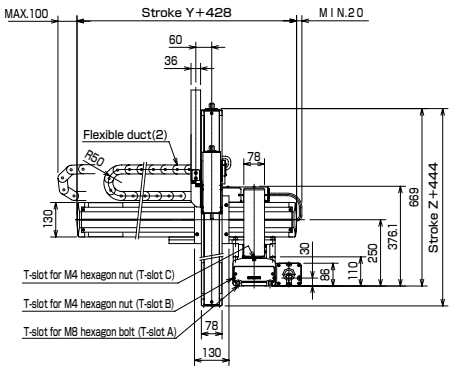

Discontinue

Axis-Related Components

Components

Options

Discontinue

Axis Combination Bracket

[Application]

Brackets are used to combine axes (or actuators) in an orthogonal form. A large number of brackets are available to cope with various combinations. Bolts and nuts are attached.

[How to order]

KBA-10 - BK - L 02

Axis combination

0705: Combination of KBB07 axis and KBB05 axis
105: Combination of KBB10 axis and KBB05 axis
107: Combination of KBB10 axis and KBB07 axis
10: Combination of KBB10 axis and KBB10 axis
31: Combination of KBB30 axis and KBB10 axis
53: Combination of KBB50 axis and KBB30 axis
33: Combination of KBB30 axis and KBB30 axis
55: Combination of KBB50 axis and KBB50 axis

Type of bracket

L: L-shaped bracket
P: Plate-shaped bracket

Type of combination

See the table below.

[Bracket type by axis combination]

Axis combination [1]	Basic axis	Axis 2	Bracket type	Ref. Page
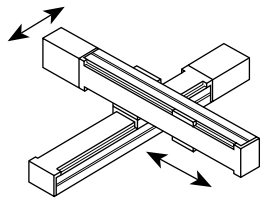 X-Y Right-handed Y-axis slider opposite to motor side	KBB-07	KBB-05	KBA-0705-BK-L02	P174
	KBB-10	KBB-07	KBA-107-BK-L02	P174
	KBB-10	KBB-05	KBA-105-BK-L02	P174
	KBB-10	KBB-10	KBA-10-BK-L02	P174
	KBB-30	KBB-10	KBA-31-BK-L02	P174
	KBB-50	KBB-30	KBA-53-BK-L02	P174
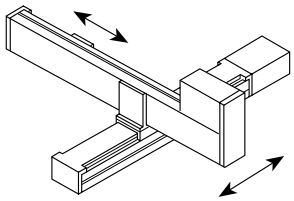 X-Y Left-handed Y-axis slider on motor side	KBB-30	KBB-30	KBA-33-BK-L02	P175
	KBB-50	KBB-50	KBA-55-BK-L02	P175

Axis combination [2]	Basic axis	Axis 2	Bracket type	Ref. Page
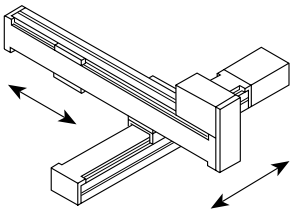 X-Y Left-handed Y-axis slider opposite to motor side	KBB-07	KBB-05	KBA-0705-BK-L03	P175
	KBB-10	KBB-07	KBA-107-BK-L03	P175
	KBB-10	KBB-05	KBA-105-BK-L03	P175
	KBB-10	KBB-10	KBA-10-BK-L03	P175
	KBB-30	KBB-10	KBA-31-BK-L03	P176
	KBB-50	KBB-30	KBA-53-BK-L03	P176
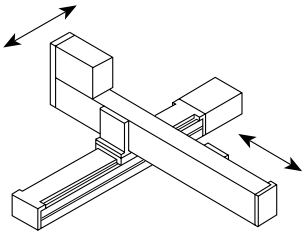 X-Y Right-handed Y-axis slider on motor side	KBB-30	KBB-30	KBA-33-BK-L03	P176
	KBB-50	KBB-50	KBA-55-BK-L03	P176

Axis combination [3]	Basic axis	Axis 2	Bracket type	Ref. Page
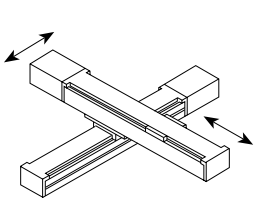 X-Y table	KBB-07	KBB-05	KBA-0705-BK-P06	P176
	KBB-10	KBB-07	KBA-107-BK-P06	P176
	KBB-10	KBB-05	KBA-105-BK-P06	P177
	KBB-10	KBB-10	KBA-10-BK-P06	P177
	KBB-30	KBB-10	KBA-31-BK-P06	P177
	KBB-50	KBB-30	KBA-53-BK-P06	P177
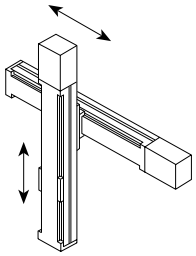 Y-Z				
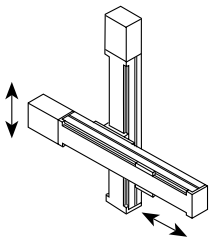 Z-Y				

Axis combination [4]	Basic axis	Axis 2	Bracket type	Ref. Page
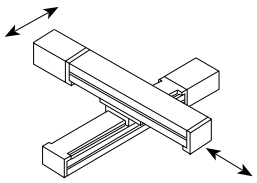 X-Y table X-Y move	KBB-10	KBB-10	KBA-10-BK-P07	P177
	KBB-30	KBB-10	KBA-31-BK-P07	P178
	KBB-50	KBB-30	KBA-53-BK-P07	P178
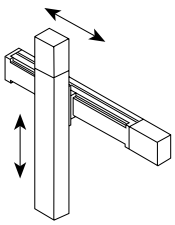 Y-Z move				
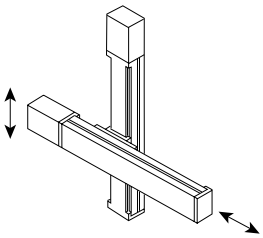 Z-Y move				

Components

Axis combination [5]	Basic axis	Axis 2	Bracket type	Ref. Page
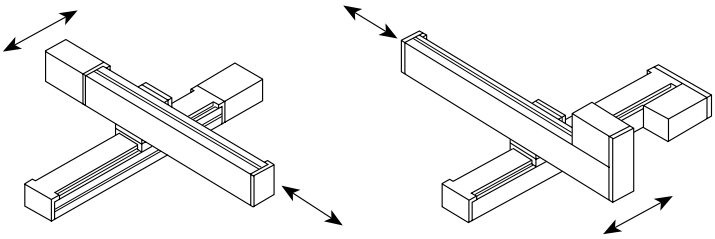 X-Y move Right-handed X-Y move Left-handed	KBB-10	KBB-10	KBA-10-BK-L04	P178

Axis combination [6]	Basic axis	Axis 2	Bracket type	Ref. Page
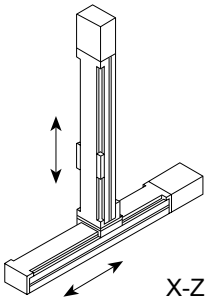 X-Z	KBB-10	KBB-10	KBA-11-BK-L01	P178
	KBB-30	KBB-10	KBA-31-BK-L01	P179
	KBB-50	KBB-30	KBA-53-BK-L01	P179
	KBB-30	KBB-30	KBA-33-BK-L01	P179
	KBB-50	KBB-50	KBA-55-BK-L01	P179

Axis combination [7]	Basic axis	Axis 2	Bracket type	Ref. Page
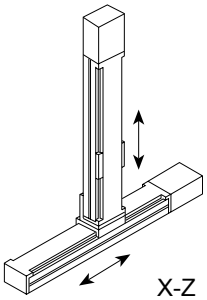 X-Z Z-axis facing sideways	KBB-10	KBB-10	KBA-10-BK-L05	P179

Axis combination [8]

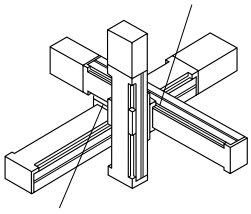

X-Y-Z Right-handed
Y-axis slider opposite to motor side

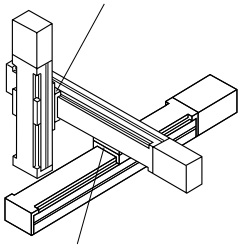

X-Y-Z Left-handed
Y-axis slider opposite to motor side

Discontinue

Dimensions of Axis Combination Bracket

[KBA-0705-BK-L02] Material: Aluminum alloy, weight 0.5kg

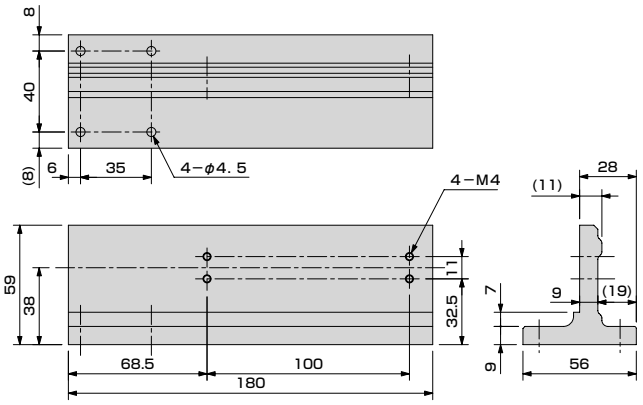

[KBA-107-BK-L02] Material: Aluminum alloy, weight 0.8kg

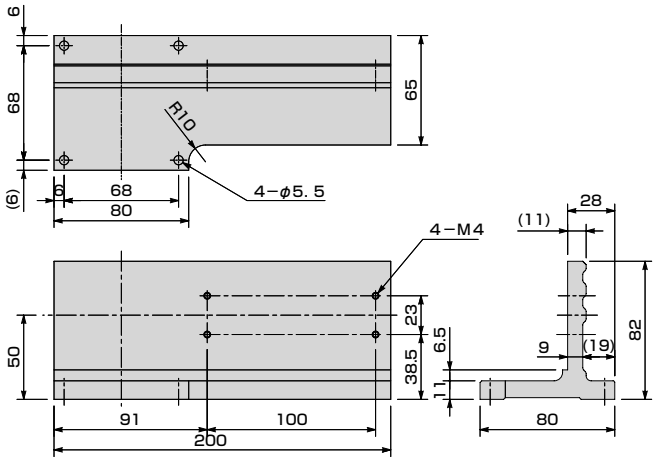

[KBA-105-BK-L02] Material: Aluminum alloy, weight 0.8kg

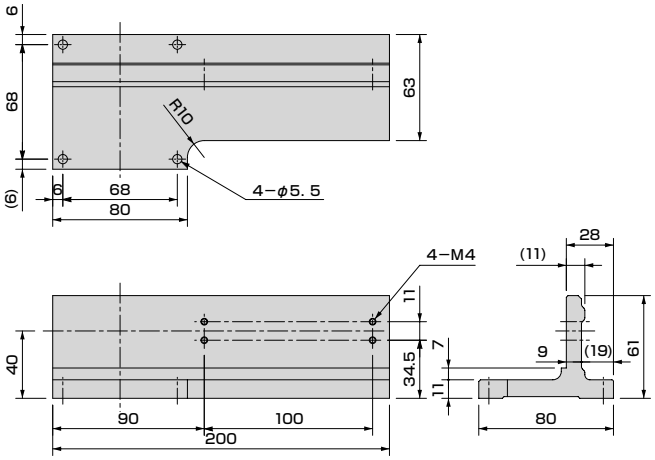

[KBA-10-BK-L02] Material: Aluminum alloy, weight 0.9kg

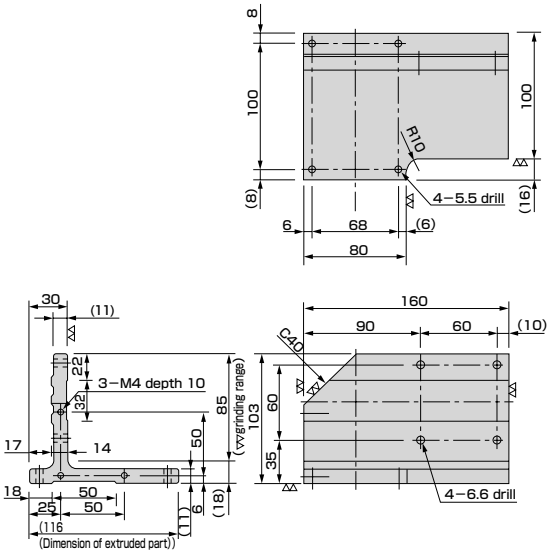

[KBA-31-BK-L02] Material: Aluminum alloy, weight 1.9kg

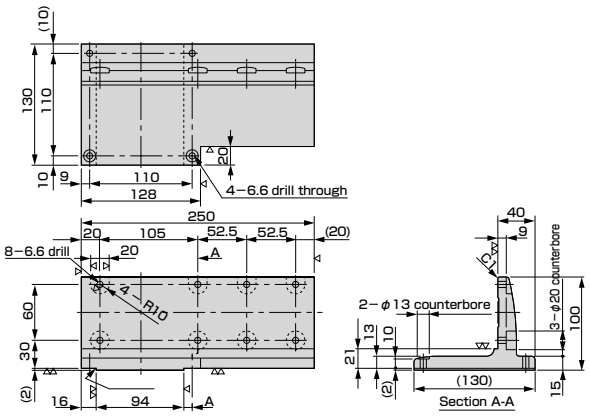

[KBA- 53-BK-L02] Material: Aluminum alloy, weight 8.5kg

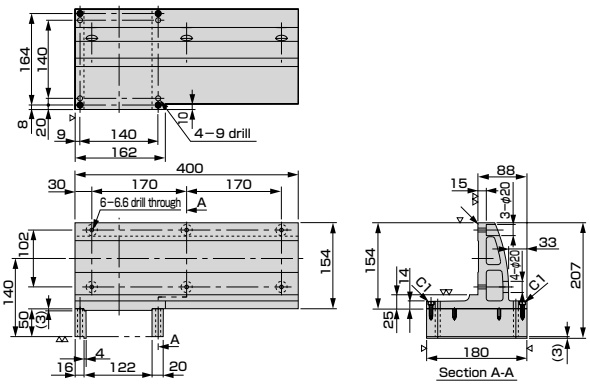

Components

Discontinue

Dimensions of Axis Combination Bracket

[KBA-33-BK-L02] Material: Aluminum alloy, weight 5.9kg

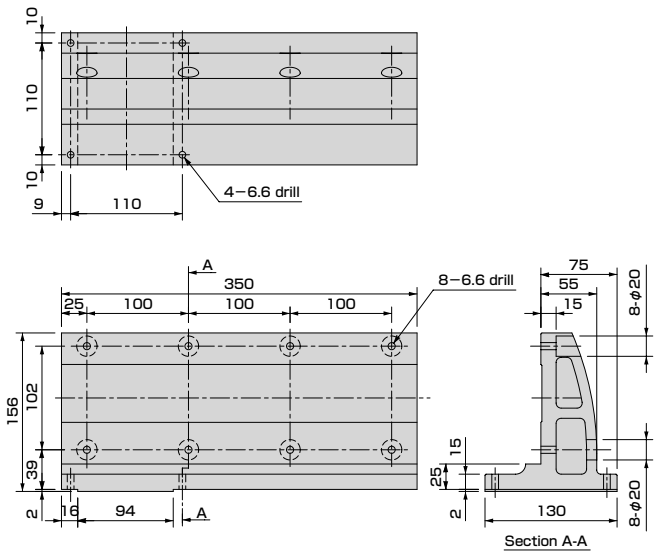

[KBA-55-BK-L02] Material: Aluminum alloy, weight 10kg

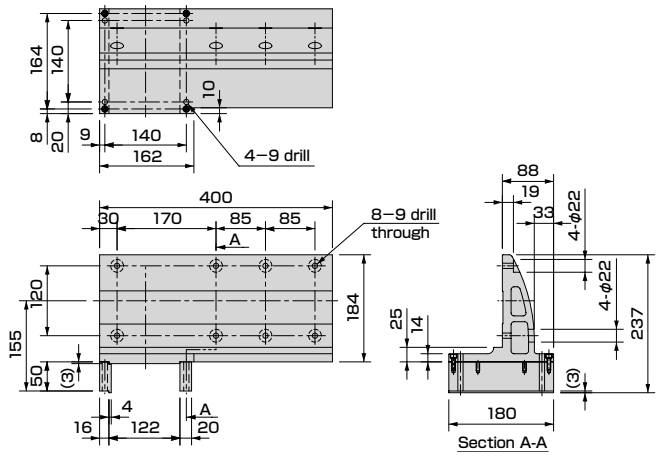

[KBA-0705-BK-L03] Material: Aluminum alloy, weight 0.5kg

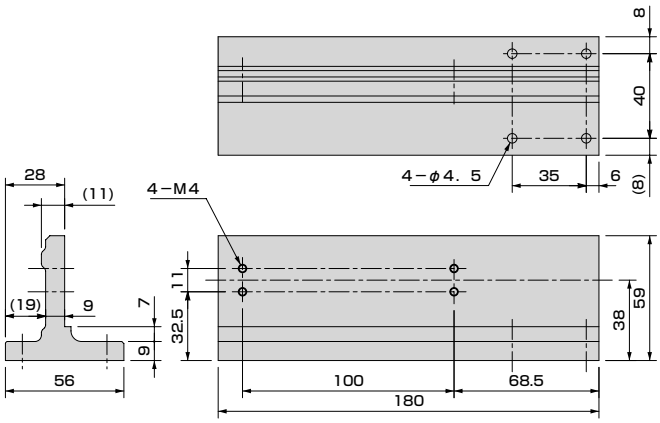

[KBA-107-BK-L03] Material: Aluminum alloy, weight 0.8kg

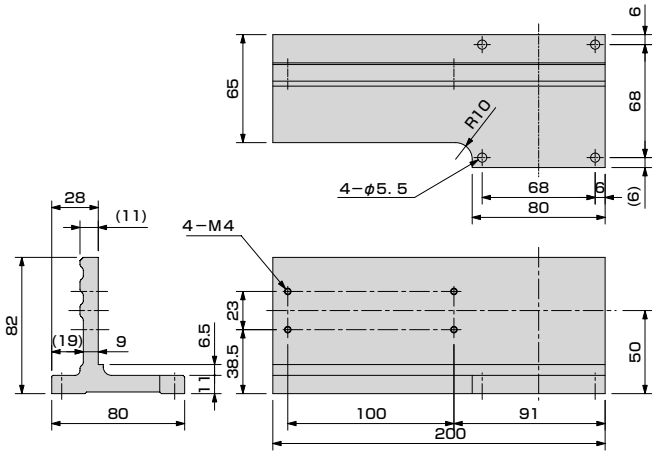

[KBA-105-BK-L03] Material: Aluminum alloy, weight 0.8kg

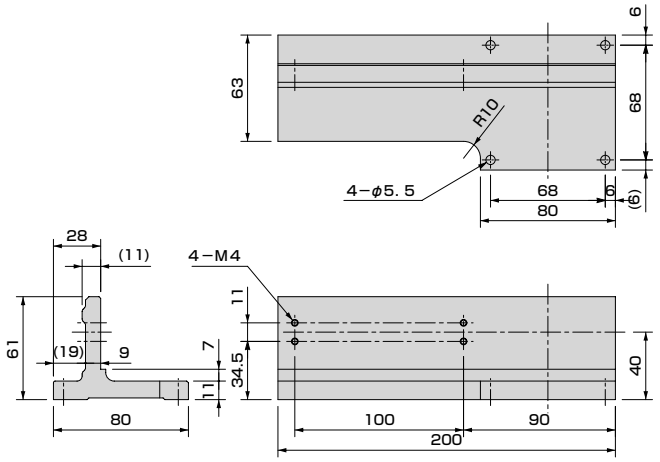

[KBA-10-BK-L03] Material: Aluminum alloy, weight 0.9kg

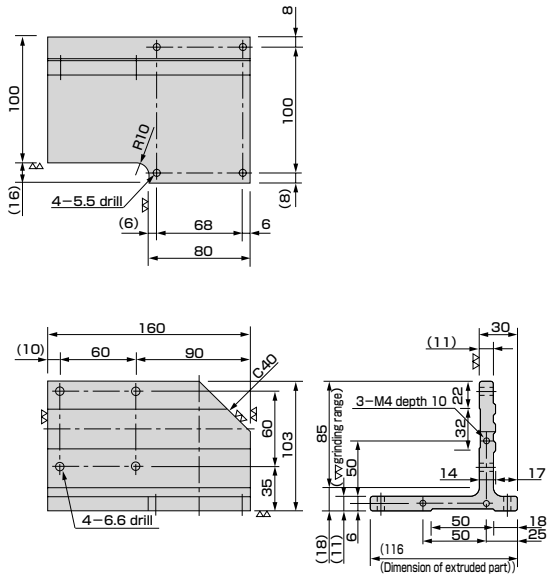

Discontinue

Dimensions of Axis Combination Bracket

[KBA-31-BK-L03] Material: Aluminum alloy, weight 1.9kg

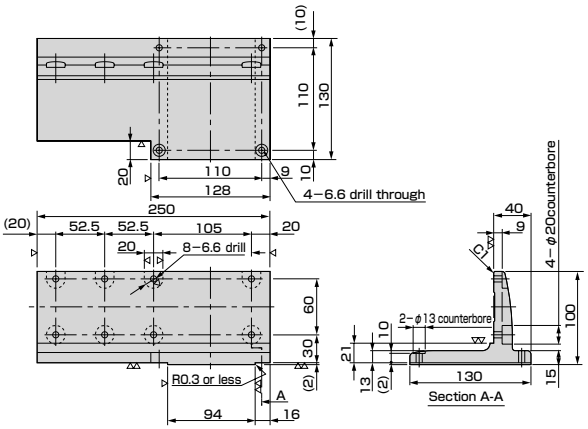

[KBA-53-BK-L03] Material: Aluminum alloy, weight 8.5kg

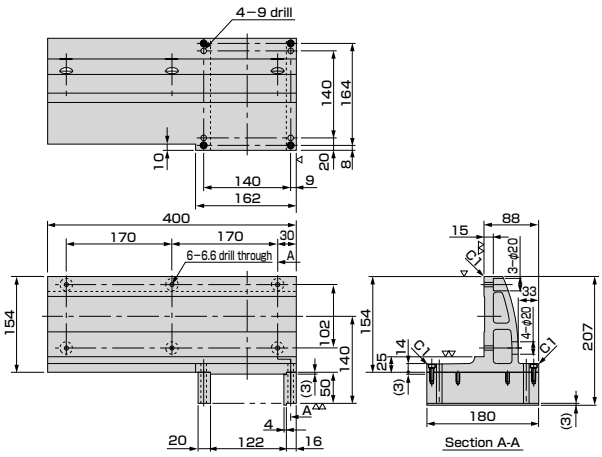

[KBA-33-BK-L03] Material: Aluminum alloy, weight 5.9kg

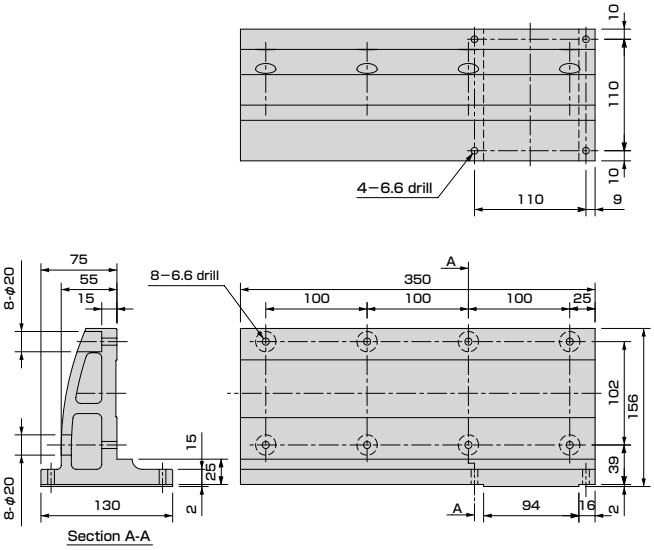

[KBA-55-BK-L03] Material: Aluminum alloy, weight 10kg

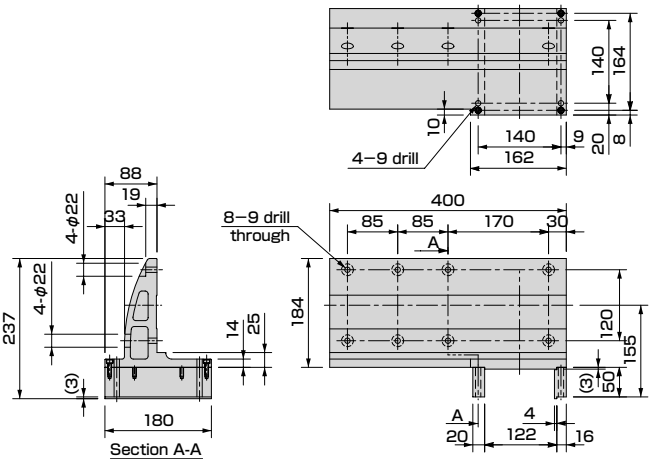

[KBA-0705-BK-P06] Material: Aluminum alloy, weight 0.3kg

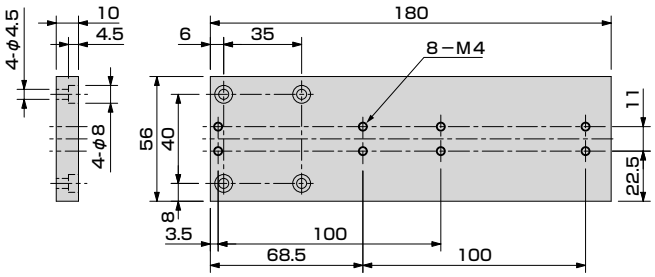

[KBA-107-BK-P06] Material: Aluminum alloy, weight 0.5kg

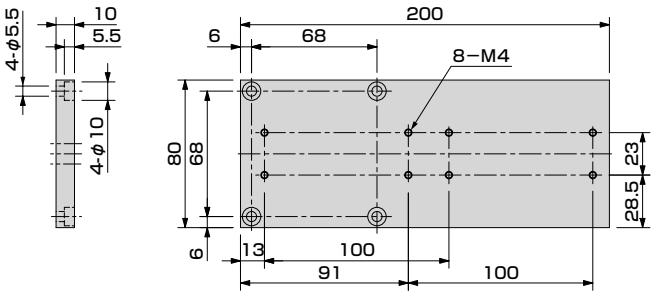

Components

Dimensions of Axis Combination Bracket

[KBA-105-BK-P06] Material: Aluminum alloy, weight 0.5kg

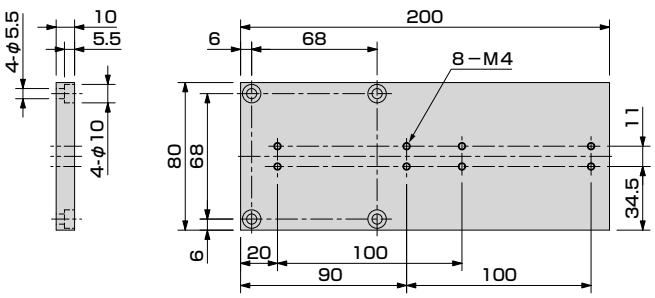

[KBA-10-BK-P06] Material: Aluminum alloy, weight 0.6kg

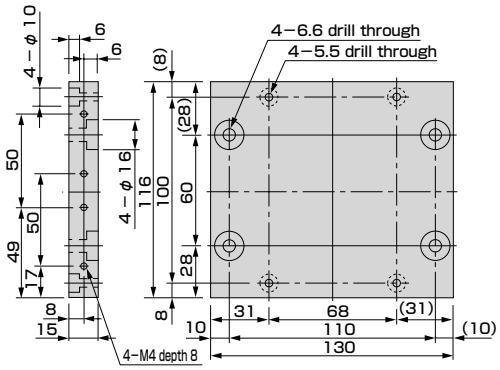

[KBA-31-BK-P06] Material: Aluminum alloy, weight 0.9kg

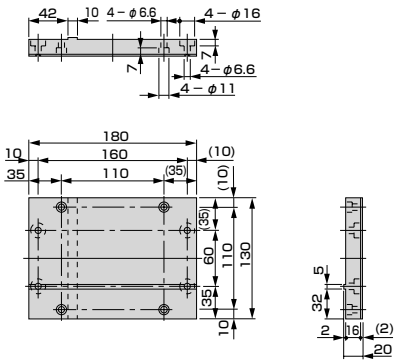

[KBA-53-BK-P06] Material: Aluminum alloy, weight 1.5kg

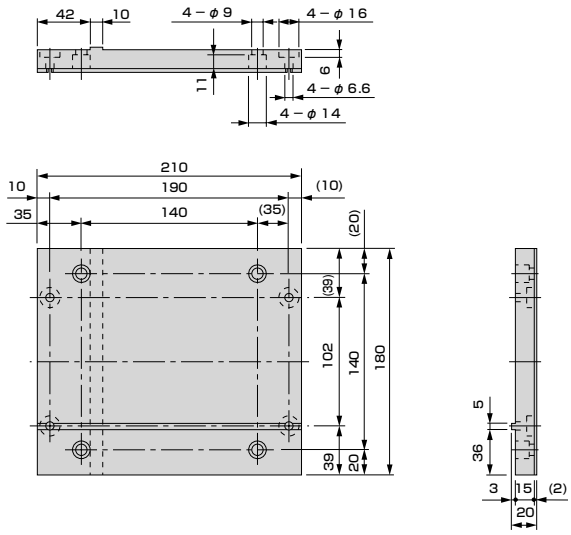

[KBA-10-BK-P07] Material: Aluminum alloy, weight 0.5kg

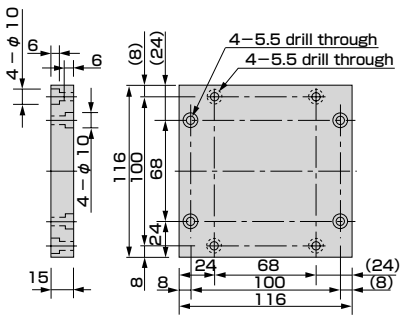

[KBA-31-BK-P07] Material: Aluminum alloy, weight 0.7kg

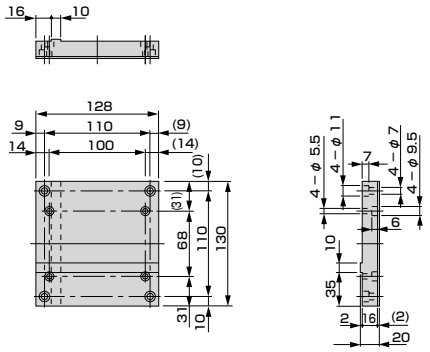

Discontinue

Dimensions of Axis Combination Bracket

[KBA-53-BK-P07] Material: Aluminum alloy, weight 1.3kg

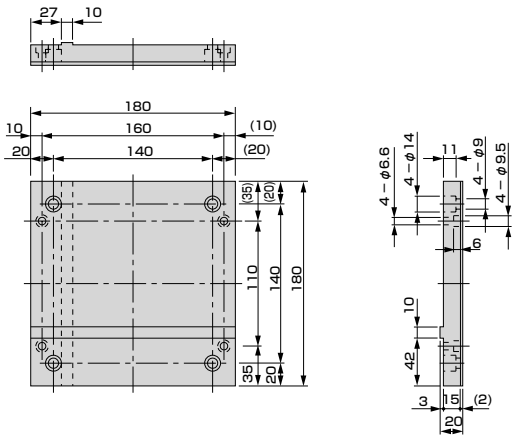

[KBA-10-BK-L04] Material: Aluminum alloy, weight 0.7kg

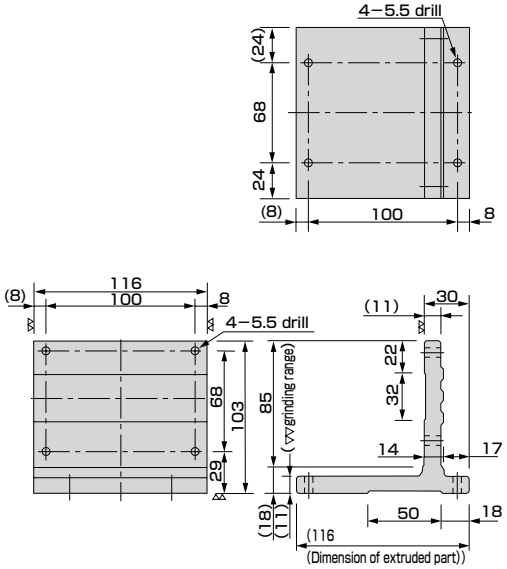

[KBA-11-BK-L01] Material: Aluminum alloy, weight 1.8kg

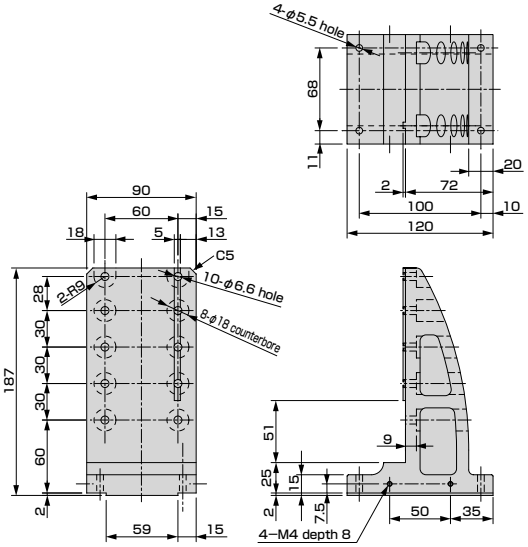

[KBA-31-BK-L01] Material: Aluminum alloy, weight 2.1kg

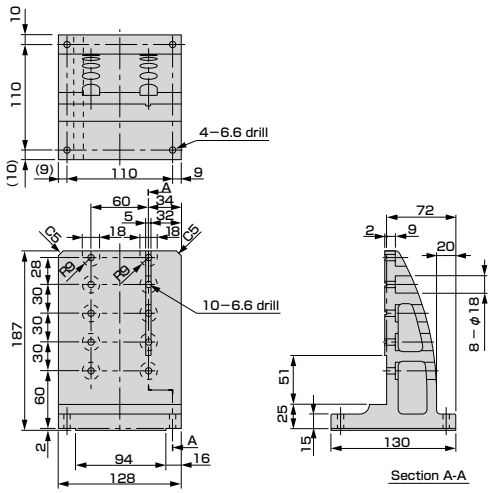

[KBA-53-BK-L01] Material: Aluminum alloy, weight 4.5kg

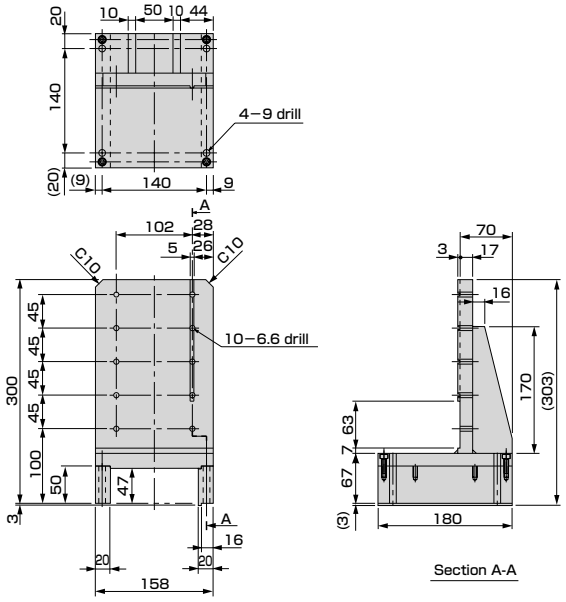

[KBA-33-BK-L01] Material: Aluminum alloy, weight 2.1kg

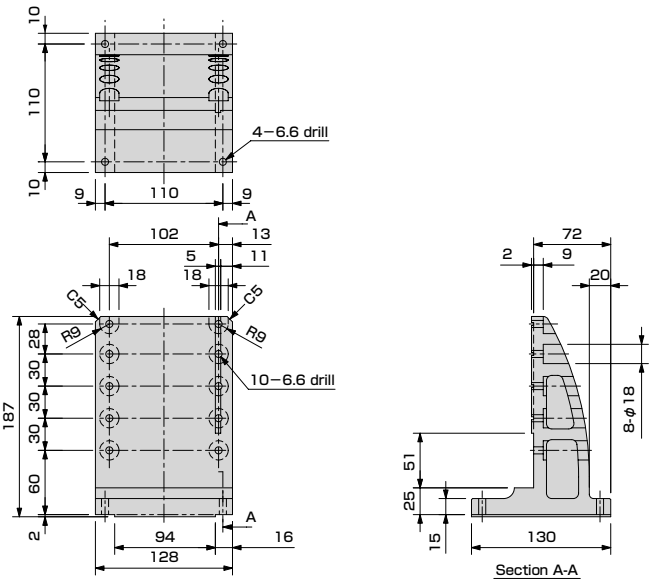

Components

Dimensions of Axis Combination Bracket

[KBA-55-BK-L01] Material: Aluminum alloy weight 5.0kg

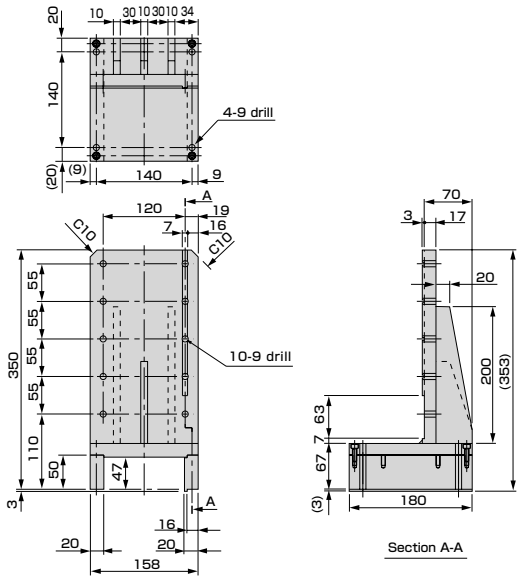

[KBA-10-BK-L05] Material: Aluminum alloy weight 0.7kg

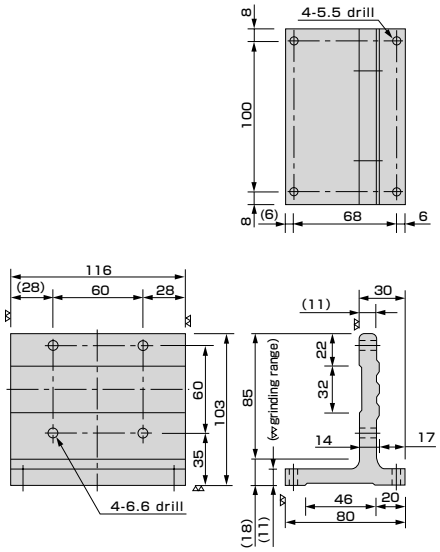

Discontinue

Controller Cable

[Application]

Used to connect a controller with an actuator (or axis). The controller cable consists of motor and encoder signal cables (i.e., two flexible cables).
When used for an orthogonal (or Cartesian) two axes system, the cable for the axis 2 should be 2 m longer than that of the axis 1 generally.
This cable is exclusively used for the actuator, and no user's cable is included.

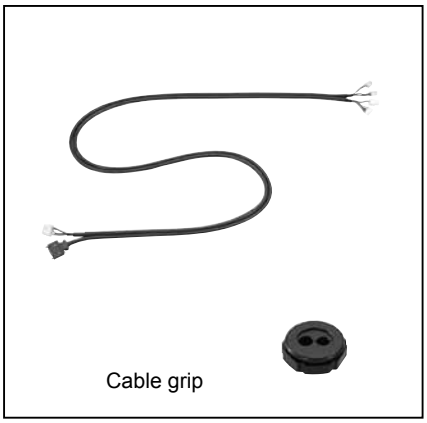

[How to order]

KBB-10 - CC - M 30

Controller cable

Cable length

30: 3000mm 90: 9000mm
50: 5000mm B0: 11000mm
70: 7000mm D0: 13000mm

Version Blank

* The controller cable is supplied as a pair of one each of motor cable and encoder signal cable. A cable grip for these two cables is attached.
* When using the controller cable for the orthogonal two axes system, pass the cable for the axis 2 through a flexible tube or flexible duct (which is available for an extra price).
* For the cable length of any special axis combination, consult with us each time.

[Dimensions]

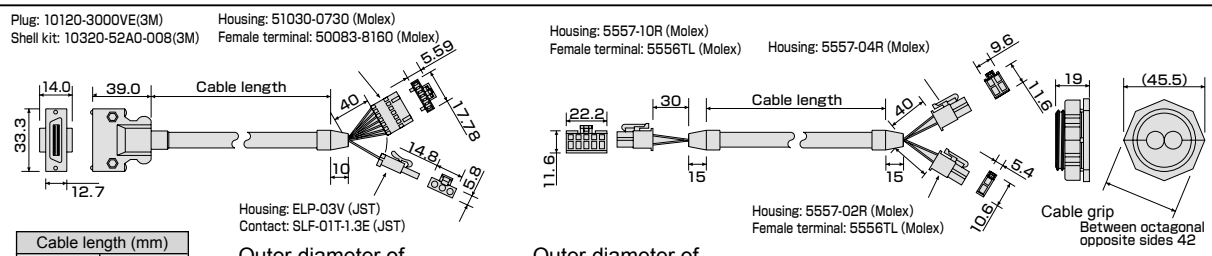

Cable length (mm)	
3000	9000
5000	11000
7000	13000

Outer diameter of encoder cable: 8.6mm

Outer diameter of motor cable: 9.6mm

Allowable minimum radius of curvature = 50 mm
Accessory: One cable grip (for two cables)

CN box

[Application]

Used to secure the both ends of a flexible tube or flexible duct.
A CN box is mounted by using a T-slot on the side of the actuator, on top of the frame cover or on the motor cover.
The CN box can also be mounted on user's equipment.
For a single axis system, this box may not be required.

[How to order]

KBA-10 - BX - B B 20

CN box

B: For flexible tube
B10: For axis 1 and axis 2
B20: For axis 1 and axis 2
B30: For basic axis of a three axes system

F: For flexible duct
F10: For basic axis
F20: For axis 2 of a three axes system
F30: For final axis

* A CN box is supplied with a set of caps, metal fixtures, grommets, cable securing fixtures.
* A controller cable only passes through the box and is connected by means of connectors.
* Order CN box in quantity of 1 piece and up.

[Dimensions]

[KBA-10-BX-B10] Exclusively used for flexible tube M size (KBA-10-FT-M□□)

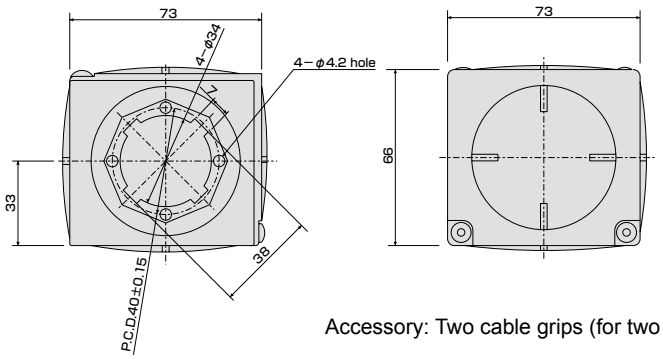

Material: Aluminum for box and ABS resin for cap

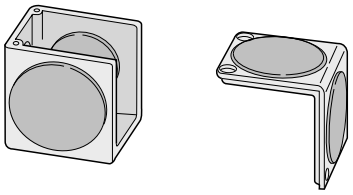

Accessory: Two cable grips (for two cables)

Components

[KBA-10-BX-B20] Exclusively used for flexible tube L size (KBA-10-FT-L□□)

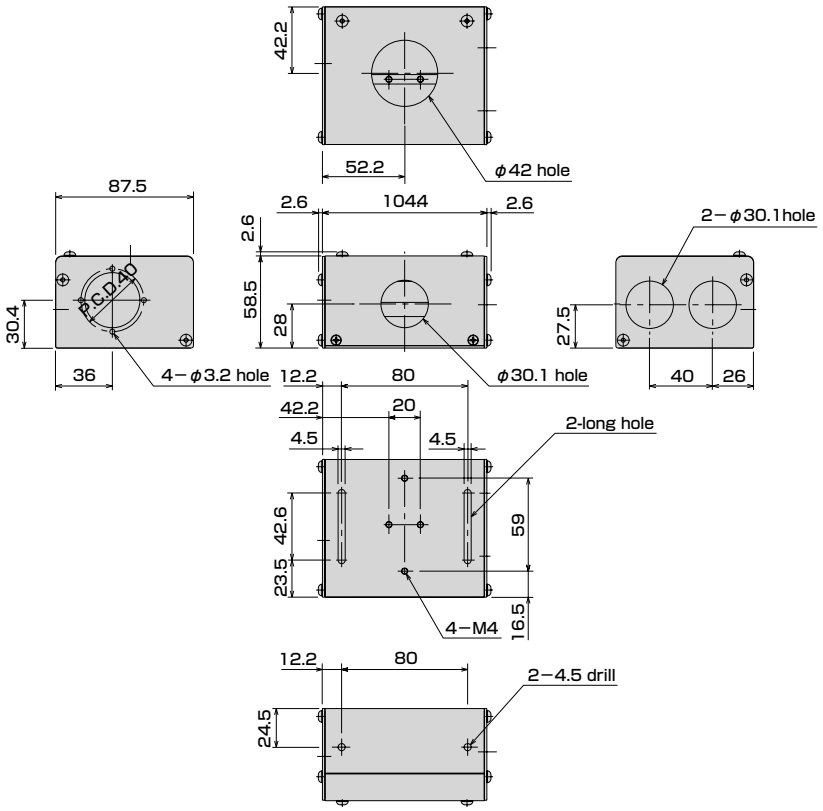

No.	Accessory	Q'ty
1	1.6, 9.9, 38, φ35	1
2	9, 41, 43.6, G1(Nut thread) JIS B 0202	1
3	4, 15, 42, 45.5, G1(Nut thread) JIS B 0202	1 set
4	1.6, 9.9, 33.3, φ30	3
5	6.5, 25, φ30, φ35, 1.5	3
6	Cross-recessed pan head screw M4×8	2
7	Hexagon nut M4	2

[KBA-10-BX-B30] Exclusively used for flexible tube L size (KBA-10-FT-L□□)

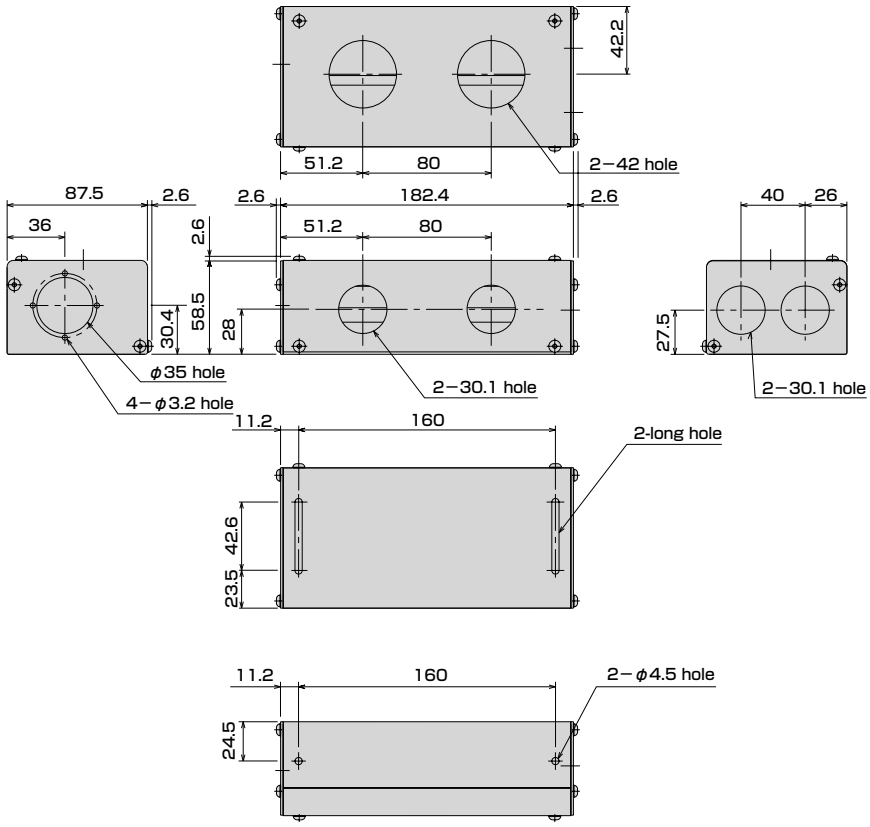

No.	Accessory	Q'ty
1	1.6, 9.9, 38, φ35	1
2	9, 41, 43.6, G1(Nut thread) JIS B 0202	1
3	4, 15, 42, 45.5, G1(Nut thread) JIS B 0202	1 set
4	1.6, 9.9, 33.3, φ30	4
5	6.5, 25, φ30, φ35, 1.5	4
6	Cross-recessed pan head screw M4×8	2
7	Hexagon nut M4	2

Discontinue

[Dimensions]

[KBA-10-BX-F10] Exclusively used for flexible duct (KBA-10-FD-□□□)

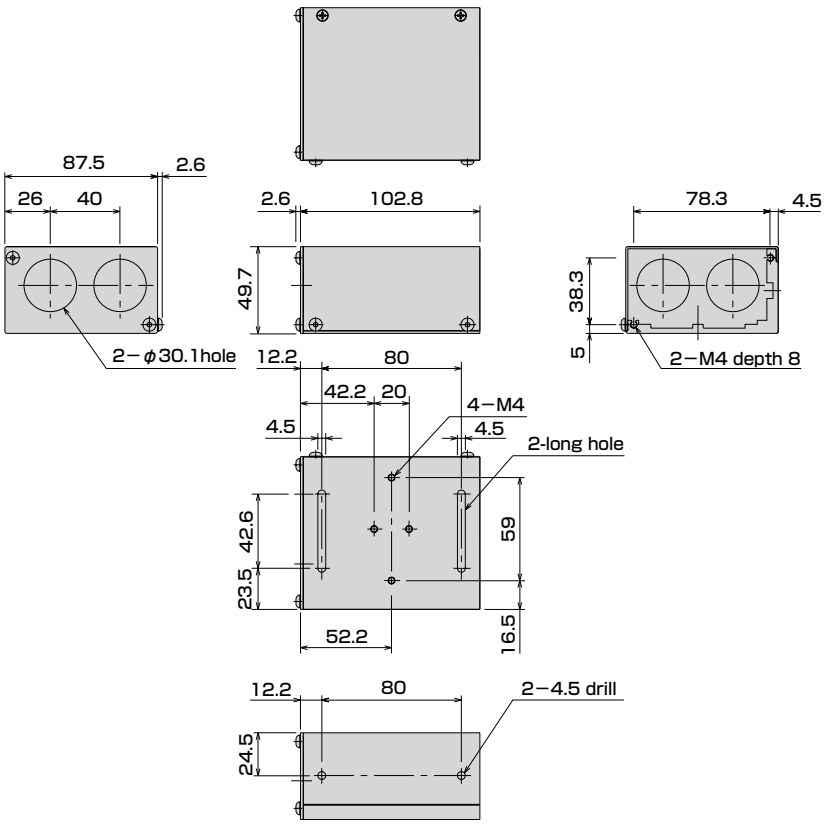

No.	Accessory		Q'ty
1	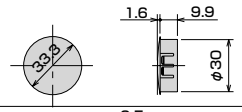		1
2	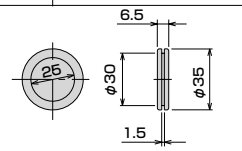		2
3	Cross-recessed pan head screw	M8×8	2
4	Hexagon nut	M4	2

[KBA-10-BX-F20] Exclusively used for flexible duct (KBA-10-FD-□□□)

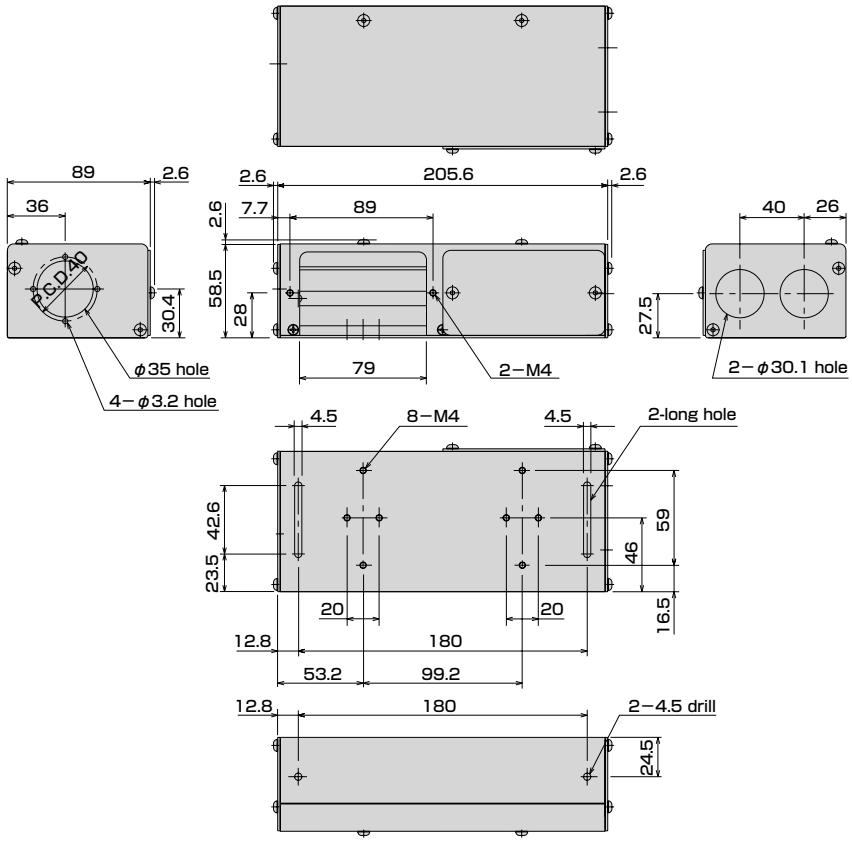

No.	Accessory		Q'ty
1	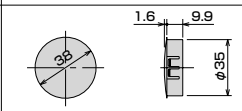		1
2	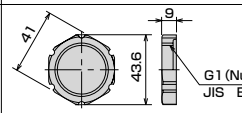		1
3	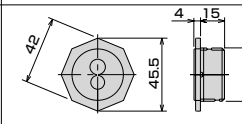		1 set
4	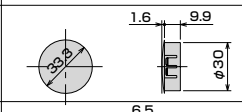		2
5	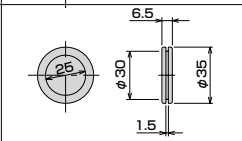		2
6	Cross-recessed pan head screw	M4×8	2
7	Hexagon nut	M4	2

Components

[KBA-10-BX-F30] Exclusively used for flexible duct (KBA-10-FD-□□□)

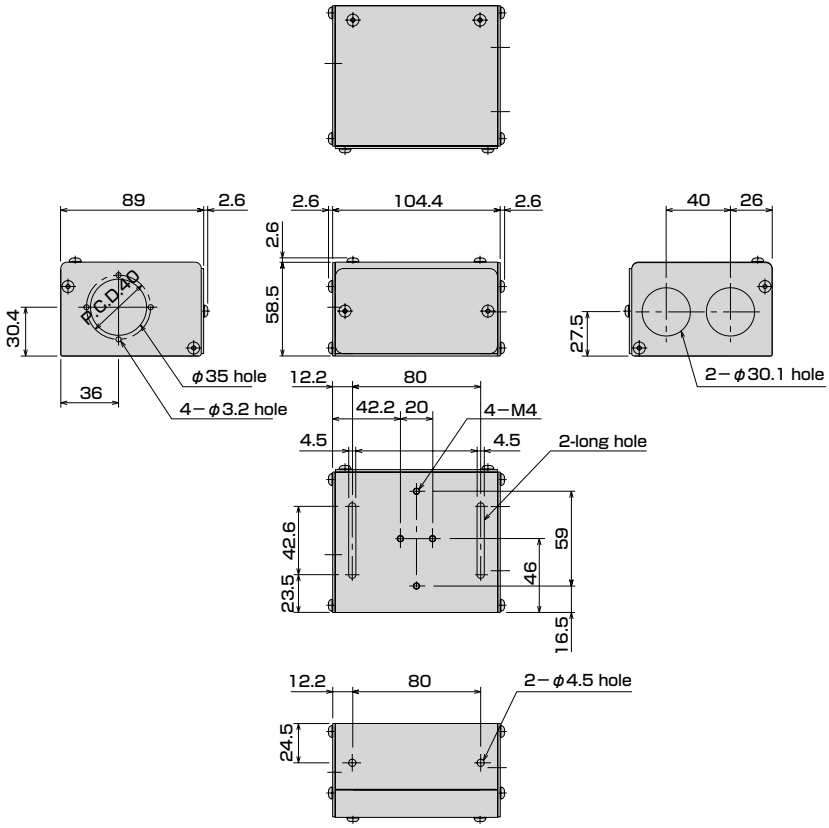

No.	Accessory	Q'ty
1	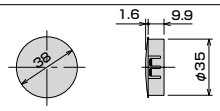	1
2	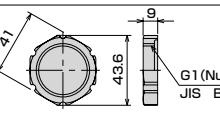	1
3	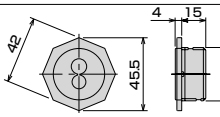	1 set
4	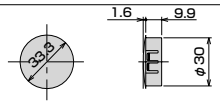	2
5	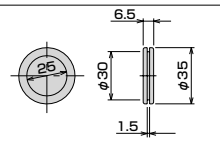	2
6	Cross-recessed pan head screw M4×8	2
7	Hexagon nut M4	2

CN Box Wrench

[How to order]

KBA - CGSP - 41

[Application]

This is a special wrench used for clamping the resin nut of cable grip to the CN box and actuator

[Dimensions]

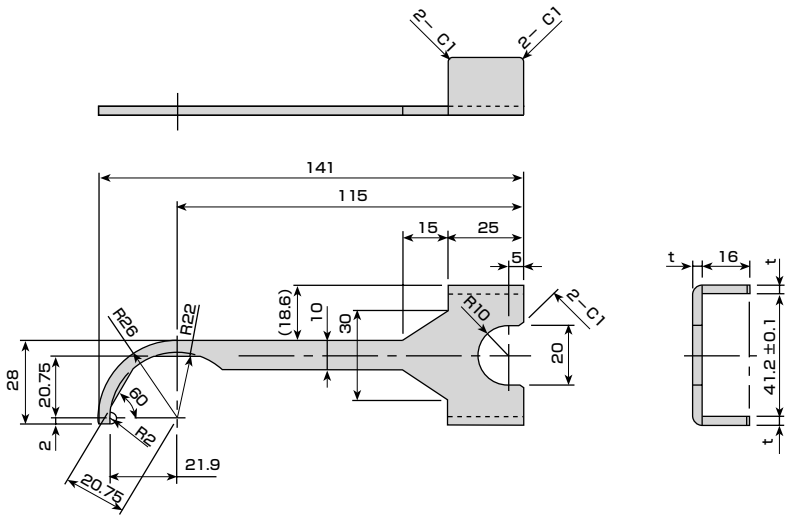

Discontinue

Flexible Tube

[Application]

Used to protect a controller cable which connects orthogonal two axes. It is also possible to pass a signal cable for tooling or other air tubing through this flexible tube.
This flexible tube can be arranged vertically (cable track style) or horizontally (hoop cable style; only M size).
To use this tube, an exclusive CN box (available for an extra price) is necessary.

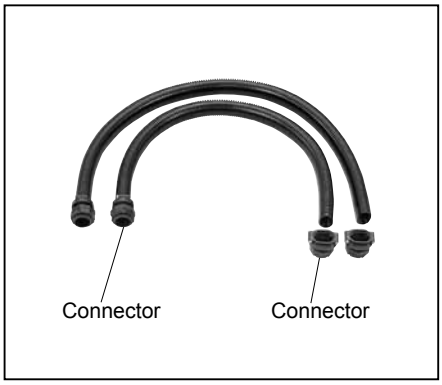

[How to order]

KBA-10 - FT - M 20

Flexible tube: FT
Size: M
Tube length: 20
Version Blank

Tube length
10: 1000mm 20: 2000mm
15: 1500mm 25: 2500mm
30: 3000mm

* Two special connectors, and clamps and bands for securing each cable at the tube inlet are attached.
* The tube section is oval and cannot be twisted between the tube and connector.
* The flexible tube can be severed easily by using a cutter knife. When connecting the tube, allow enough radius of curvature.
* As a yardstick, length of flexible tube which connects orthogonal two axes is three times the stroke of the axis 1.
* Select the flexible tube which connects with the axis 2 slider (or axis end of traveling axis), according to the form of installation.

[Dimensions]

Material: Nylon for tube and connector

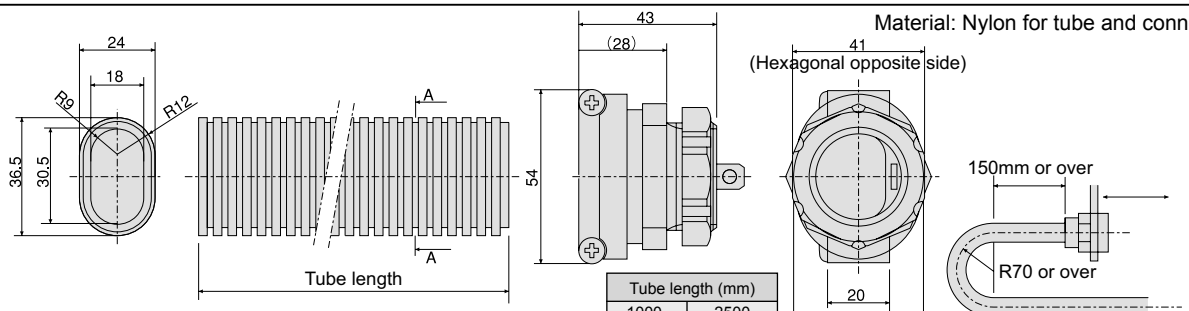

Tube length (mm)	
1000	2500
1500	3000
2000	

* Allowable minimum radius of curvature = 70 mm
* Connector is removable.

[How to order]

KBA-10 - FT - L 20

Flexible tube: FT
Size: L
Tube length: 20
Version Blank

Tube length
10: 1000mm
20: 2000mm
30: 3000mm

* Two special connectors are attached.
* The flexible tube can be severed easily by using a cutter knife. When connecting the tube, allow enough radius of curvature.
* As a yardstick, length of flexible tube which connects orthogonal two axes is three times the stroke of the axis 1.

[Dimensions]

Material: Nylon for tube and connector

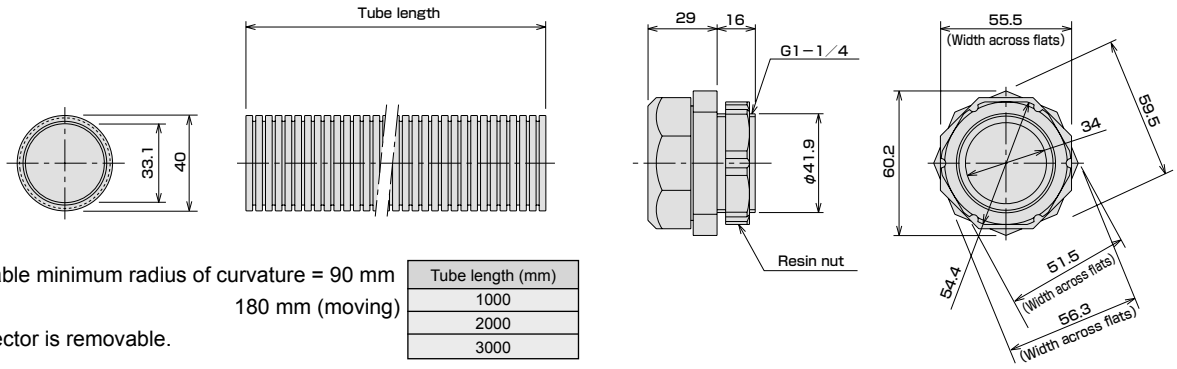

* Allowable minimum radius of curvature = 90 mm
180 mm (moving)
* Connector is removable.

Tube length (mm)
1000
2000
3000

Components

Flexible Duct

[Application]

Used to protect a controller cable which connects with the moving part. It is also possible to pass a signal cable for tooling or air tubing through this flexible duct.
To use this duct, an exclusive CN box (available for an extra price) is necessary.

[How to order]

KBA-10 - FD - M 20

- FD: Flexible duct
- M: Link size
  - S: Inner width 24×19mm
  - M: Inner width 44×24mm
  - L: Inner width 58×24.5mm
- 20: No. of links
  - S -10~34
  - M-10~50
  - L-10~50

* Select the flexible duct which has enough clearance for cables and tubes to pass through.
* Select the number of links with good margin, referring to the duct selection stated below.

[Duct selection for connecting axis 1 and axis 2]

[1] Select the link size.
[2] Figure out the full length (L) of the duct. Full length of duct (L) = Basic length (B) + X-axis stroke (X)
[3] Figure out the number of links required (A). No. of links (A) = Full length of duct ÷ Link pitch (C)
Note: Fraction of the number of links is to be rounded up.

Combination	Axis 1	Axis 2	Link size	Basic length mm (B)
X−Y	KBB-30-ST	KBB-10-ST	M (L is applicable.)	585
	KBB-30-UR/UL	KBB-10-UR/UL	M (L is applicable.)	360
	KBB-50-ST	KBB-30-ST	L (M is applicable.)	630
	KBB-50-UR/UL	KBB-30-ST	L (M is applicable.)	540
X−Z	KBB-30-ST	KBB-10-ST	M (L is applicable.)	630
	KBB-30-UR/UL	KBB-10-UR/UL	M (L is applicable.)	360
	KBB-50-ST	KBB-30-ST	L (M is applicable.)	765
	KBB-50-UR/UL	KBB-30-UR/UL	L (M is applicable.)	675

Link size	Pitch mm (C)
S	32
M	45
L	45

* Shown above are representative examples. For other combinations, contact us.

[Dimensions]

[KBA-10-FD-S**]

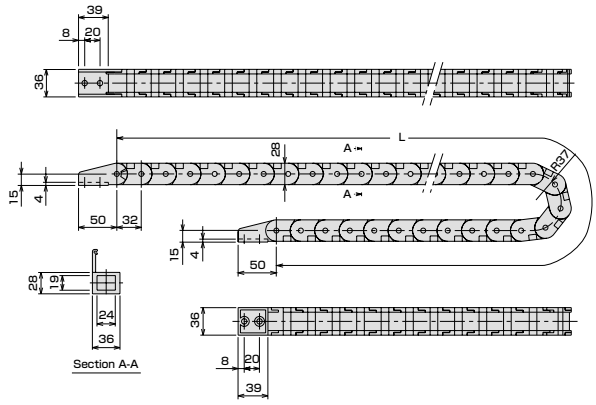

[KBA-10-FD-M**]

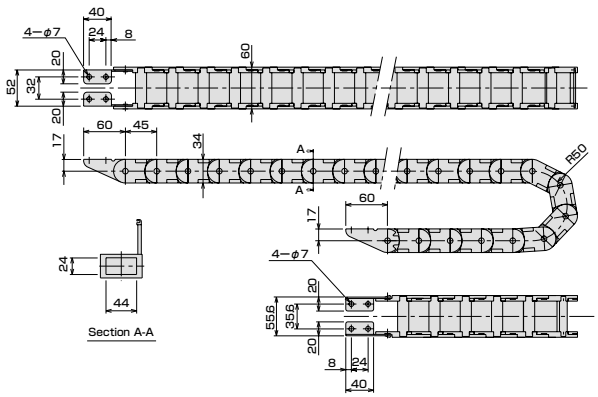

[KBA-10-FD-L**]

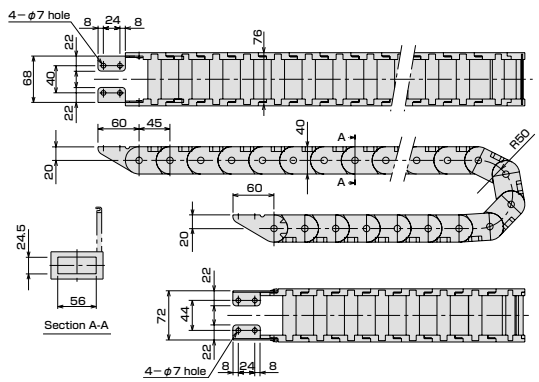

Discontinue

Tube Tray

[Application]

Used to hold a flexible tube when the tube is placed horizontally.
This tray is secured to the 4 mm-wide T-slot on the side of the actuator.
It not only supports a flexible tube, but prevents lateral movement of the tube.

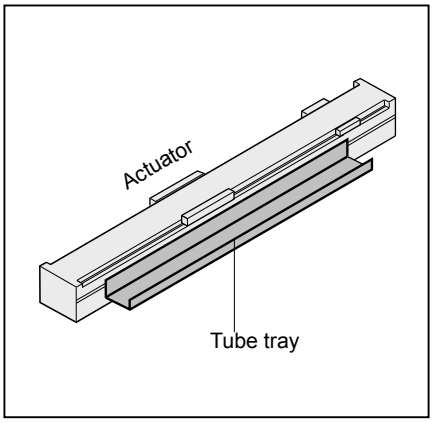

[How to order]

KBA-10 - TT - M 23

Tube tray

Tray length
23: 230mm A3: 1030mm
43: 430mm C3: 1230mm
63: 630mm
83: 830mm

Version Blank

[Dimensions]

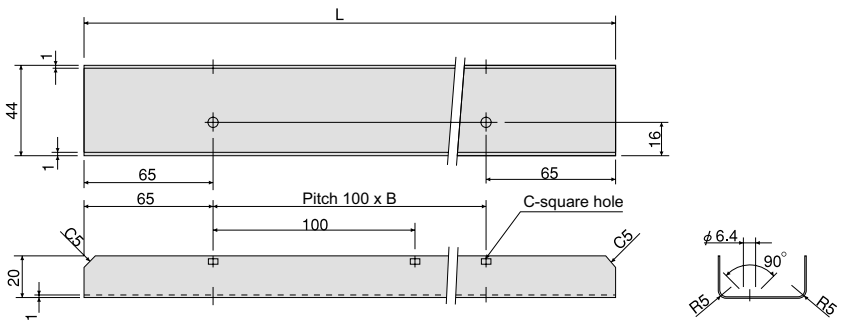

Material: Stainless steel

L (mm)	B	C
230	1	2
430	3	4
630	5	6
830	7	8
1030	9	10
1230	11	12

Accessories: L-shaped metal fittingsand set screws

Flexible Tray

[Application]

Used to hold a flexible duct.
This tray is secured to the 4 mm-wide T-slot on the side of the actuator.
It prevents lateral movement of the duct.

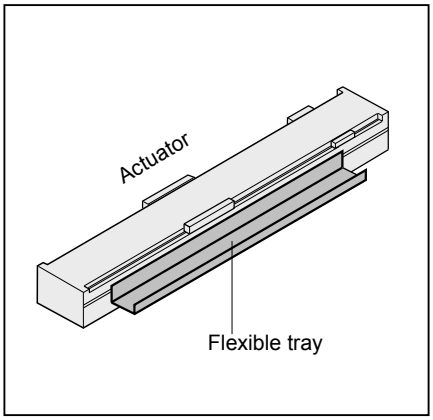

[How to order]

KBA-10 - TT - L 24

Flexible tray

Tray length
24: 240mm 84: 840mm
44: 440mm A4: 1040mm
64: 640mm

[Dimensions]

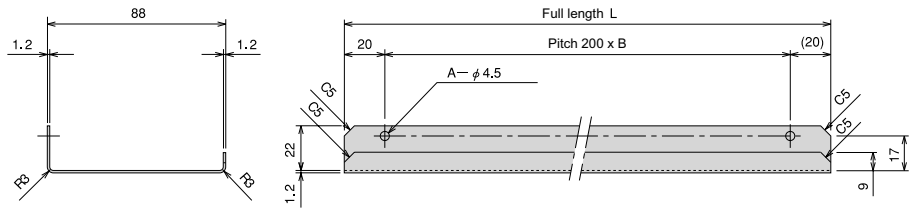

Material: Stainless steel

L (mm)	A	B
240	2	1
440	3	2
640	4	3
840	5	4
1040	6	5

Accessories: Hex socket button-head screwsand hexagon nuts

Support Guide

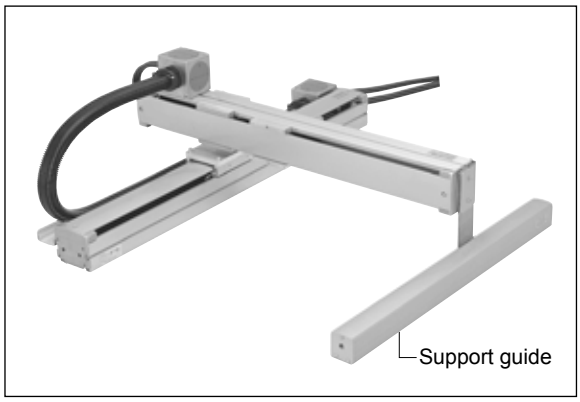

[Application]

This is a guide rail which is used to support the Y-axis end.
When the support guide is mounted on the end of the Y-axis, moment imposed on the X-axis can be reduced with less deflection of the Y-axis.
It is useful for the work requiring rigidity or long Y-axis stroke.

[How to order]

KBA- 10 −SG−M 40

Axis combination
- 10: KBB10 (X-axis)–BB10 (Y-axis)
- 31: KBB30 (X-axis)–BB10 (Y-axis)
- 53: KBB50 (X-axis)–BB30 (Y-axis)

X-axis stroke
- 10: 100mm ~ 90: 900mm
- A0: 1000mm ~ H0: 1700mm
- J0: 1800mm ~ N0: 2200mm
- P0: 2300mm ~ R0: 2500mm

■ Deflection ■

As shown in the right figure, deflection is measured by exerting 5 kg load on theslider with the Y-axis slider located on the end.
(Example) X-axis : KBB10E-ST-M, Y-axis : KBB10E-ST-S (450mm stroke)

	Deflection
Without support guide	0.4mm
With support guide	0.07mm

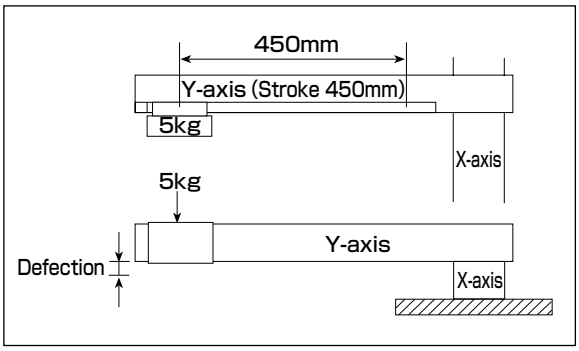

[Load capacity]

As moment exerted on the X-axis can be reduced, load capacity for axis combination can be increased, which differs with the type of combination. For details, contact our sales office in your territory.

[Outer dimensions]

KBA-10-SG

X-axis: KBB-10□-□□-M□□N-□□
Y-axis: KBB-10□-□□-M□□N-□□
Common to both ball screw drive type and timing belt drive type.

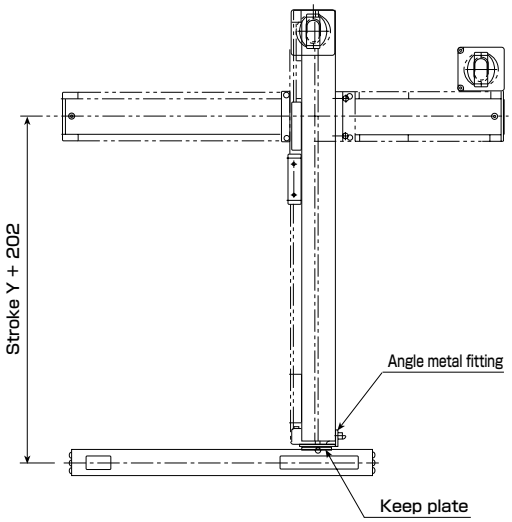

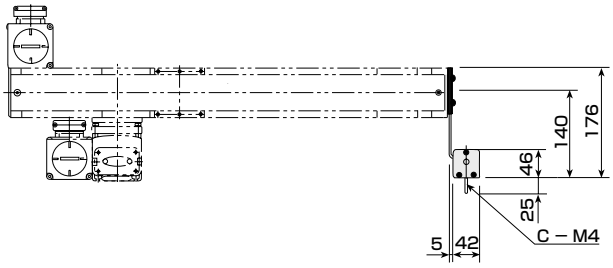

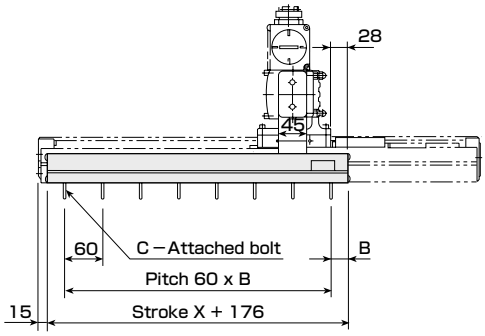

Stroke X (mm)	100	200	300	400	500	600	700	800	900	1000	1100	1200	1300	1400	1500
B (mm)	17.6	7.6	27.6	17.6	7.6	27.6	17.6	7.6	27.6	17.6	7.6	27.6	17.6	7.6	27.6
C (q'ty)	5	7	8	10	12	13	15	17	18	20	22	23	25	27	28
D	4	6	7	9	11	12	14	16	17	19	21	22	24	26	27

* Value “C” signifies the number of attached clamp bolts.

Discontinue

KBA-31-SG

X-axis: KBB-30□-□□-M□□N-□□
Y-axis: KBB-10□-□□-M□□N-□□
Common to both ball screw drive type and timing belt drive type.

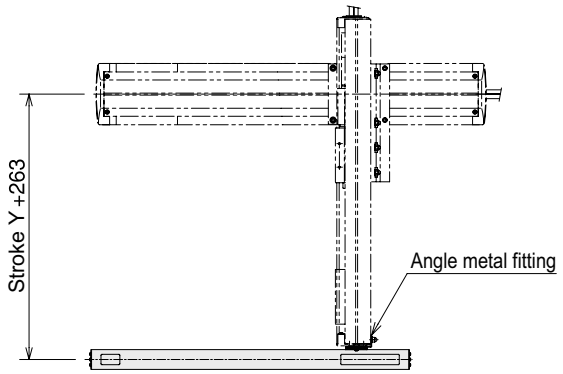

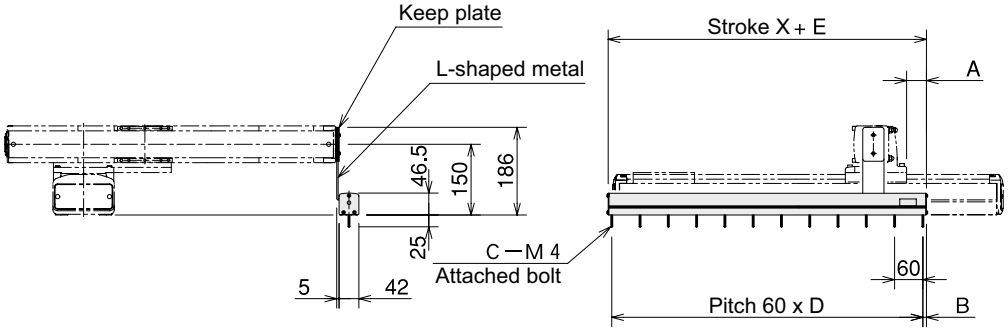

Stroke X (mm)	100	200(150)	300(250)	400(350)	500(450)	600(550)	700(650)	800(750)	900(850)	1000(950)	1100(1050)	1200	1300	1400	1500
A (mm)	17.1 (42.1)														
B (mm)	17.6	7.6	27.6	17.6	7.6	27.6	17.6	7.6	27.6	17.6	7.6	27.6	17.6	7.6	27.6
C (q'ty)	5	7	8	10	12	13	15	17	18	20	22	23	25	27	28
D	4	6	7	9	11	12	14	16	17	19	21	22	24	26	27
E (mm)	176 (226)														

* The values in parentheses are applicable only when KBB30E-ST type (ball screw drive type) is used for the X-axis.
* Value "C" signifies the number of attached clamp bolts.

KBA-53-SG

X-axis: KBB-50□-□□-M□□N-□□
Y-axis: KBB-30□-□□-M□□N-□□
Common to both ball screw drive type and timing belt drive type.

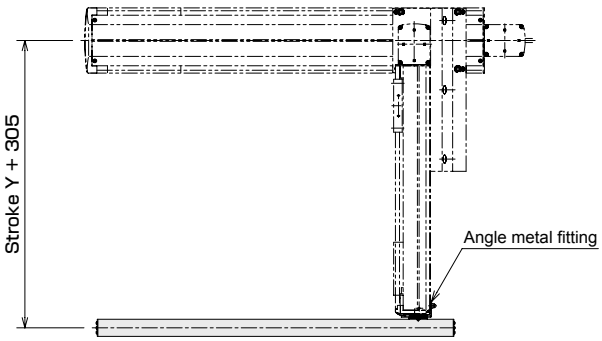

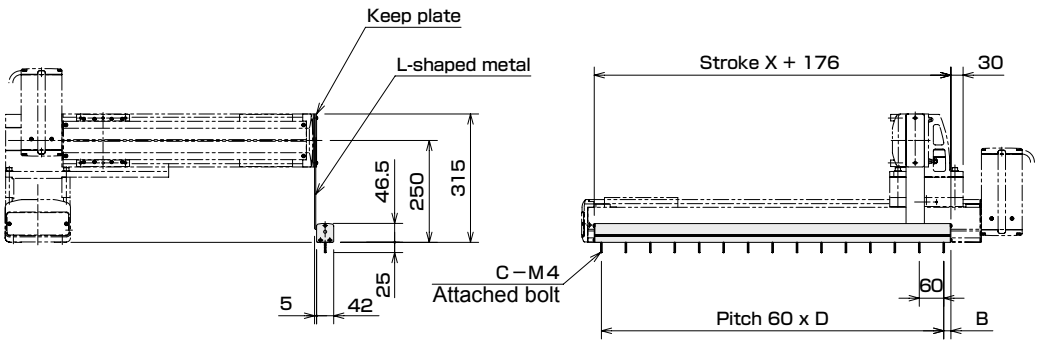

Stroke X (mm)	100	200	300	400	500	600	700	800	900	1000	1100	1200	1300	1400	1500
B (mm)	17.6	7.6	27.6	17.6	7.6	27.6	17.6	7.6	27.6	17.6	7.6	27.6	17.6	7.6	27.6
C (q'ty)	5	7	8	10	12	13	15	17	18	20	22	23	25	27	28
D	4	6	7	9	11	12	14	16	17	19	21	22	24	26	27

* Value "C" signifies the number of attached clamp bolts.

Home Position Change Sensor

[Application]

Used to change the home return position of axis slider to the opposite end to motor side or mid-point of axis stroke.
This function is effective when the home position is located at opposite end to motor side. Also, when a traveling axes combination is used, this sensor is required because the home position is located opposite to the motor side.

<When home position is located opposite to motor side>

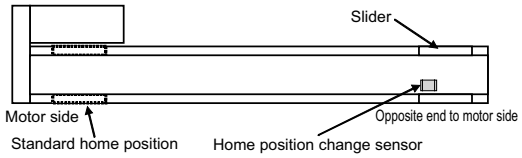

★Change of controller parameter (motor rotating direction) is required.

<When home position is located at mid-point of axis stroke>

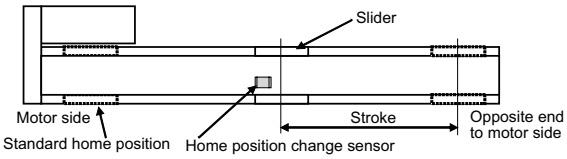

★Be sure to mount a stopper to prevent the slider from moving by about 3 mm or over toward the motor side from the home position.

[How to order]

KBA-HBS-BA 10 □

Applicable axis
10: Ball screw driven axis
20: Timing belt driven axis

Cable length
(Note: Only for applicable axis 20)
Blank: Cable length 1950 mm
L : Cable length 3200 mm

[Dimensions]

KBA-HBS-BA10

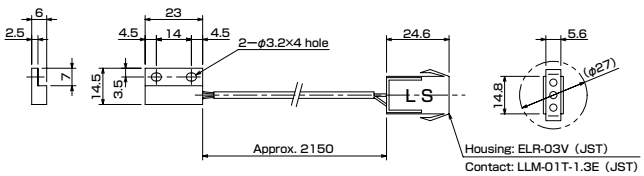

KBA-HBS-BA20 □

Model no.	Cable length L (mm)
KBA-HBS-BA20	Approx 1950
KBA-HBS-BA20L	Approx 3200

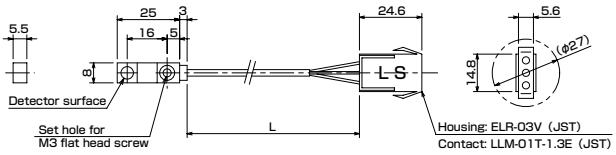

Strain Relief

[Application]

Used to set in the hole of CN box and secure the wire or tube when user's wire or tube passes through the flexible tube.
To mount the strain relief on the CN box, use a hole other than the holes used for controller cable or flexible tube.
User's wire and controller cable are joined or branched in the CN box.

[How to order]

KBA-10 - SC - A 02 □

Strain relief
Version Blank

* Up to four bore sizes of the strain relief are available according to the cable size to be used.

[Dimensions]

	Applicable conduit size (mm)
1st stage	ø9~11
2nd stage	ø11~14
3nd stage	ø14~17
4th stage	ø17~19

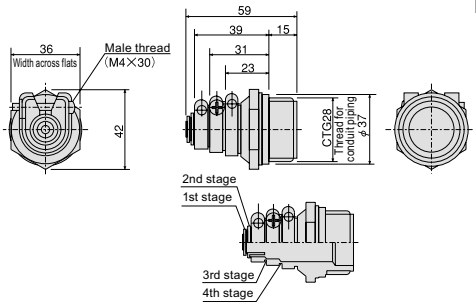

Material: Flexible PCV for body
Polycarbonate for screw
Nylon for nut

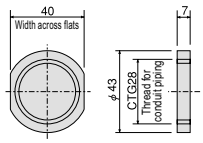

Discontinue

Cable Grip

[Application]

Used to seal the entry hole of the actuator or CN box to prevent a controller cable from being disconnected or moving in the flexible tube.
This grip is intended for securing the controller cable. To secure user's cable, use a strain relief.
The cable grip comes in the two types; for two cables of a single axis system and for four cables of a two-axis system.

[How to order]

KBA-10 - CG - M 2 2

- Cable grip: CG
- Cable quantity: 2 / 4
  - 2: For two cables
  - 4: For four cables
- Version Blank: M

* A cable grip can be split into two to facilitate passing of a controller cable.
* The controller cable is equipped with one cable grip for two cables, and the CN box with two cable grips for two cables.

[Dimensions]

Material: Nylon

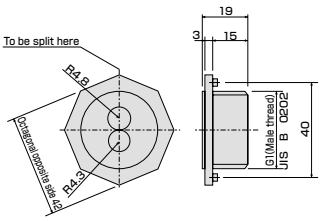

For two cables

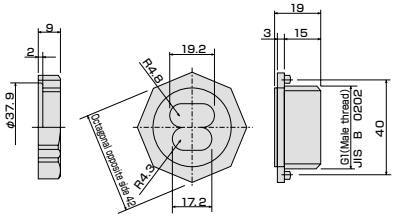

For four cables

Options

Discontinue

Parts for Control System

Discontinue

Master Unit

* Used as the master unit for single-axis control and orthogonal (or cartesian) two-axis control. A driver board for a single axis control is also incorporated.
* Easy teaching is possible by a program which is created by using the ROIbot language.
* For the supply power, multi power (AC100 V-120 V, 200 V- 240 V) is used to cope with globalized production.
* The pulse train input mode is provided as the special function of the master unit, which allows control of axis travel distance and speed by pulses supplied from an external pulse generator.
* The multitask function (No. of controlled axes: 4) is also available, which allows execution of up to four tasks in the sequential mode, two or more jobs can be executed at the same time.
* Teach pendant KCA-TPH-4C is used.

[How to order]

KCA-20 - M 10 □

Motor capacity
10 : 50~200W
40 : 400W

Version
Blank

KCA-20-M10

KCA-20-M40

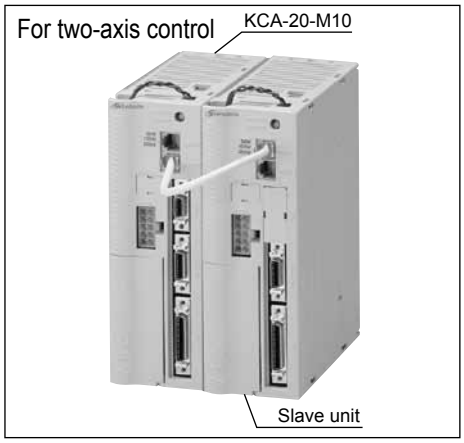

Applicable type of axis
KCA-20-M10: KBB-05D, KBB-07D, KBB-10E, KBB-30E, KBB-30F, KBB-50F
KCA-20-M40: KBB-50G
Both the ball screw driven axis and timing belt driven axis of each axis can be controlled.

[System structure]

Basic unit Extended function unit

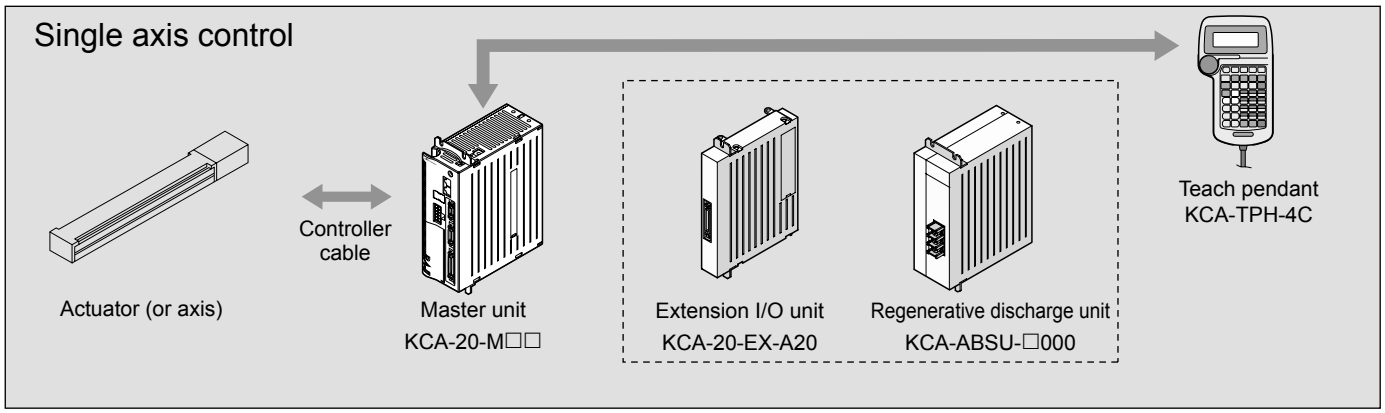

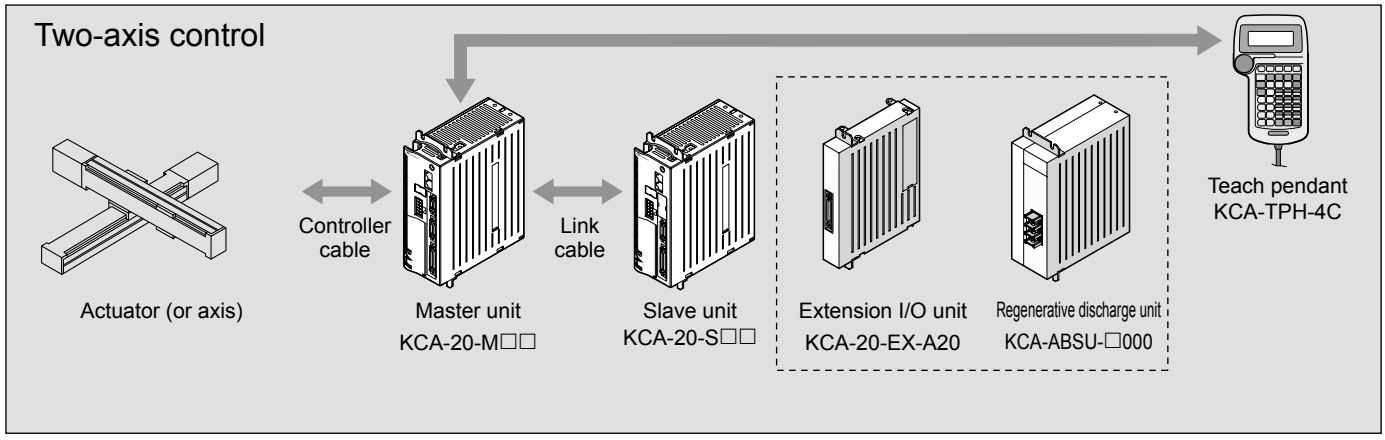

Discontinue

[General specifications]

Controller Type	KCA-20-M10			KCA-20-M40 (Note 1)
No. of controlled axes	One axis control or simultaneous two-axis control by connecting a slave unit.			
Motor capacity	50W	100W	200W	400W
Drive system	AC servo motor			
Control system	PTP, semi-closed loop control			
Teaching method	Remote teaching, direct teaching or MDI			
Speed setting	10 steps (variable)			
Acceleration setting	20 steps (variable)			
Operation mode	Sequential (multitask), palletizing, external point designation, easy			
Operation method	Step, continuous, single			
CPU	32-bit, RISC SH7145			
Self-diagnosis function	CPU down, memory error, driver error, master power voltage error, program error, etc. by watchdog timers.			
No. of programs	Sequential: 8, Palletizing: 8			
No. of program steps	Max. 2,000 steps + Coordinate table (999 per each task) × 4 (Total No. of tasks) (When slave unit is connected)			
Memory	FRAM			
No. of counters	99			
No. of timers	9			
Alarm display	Error indicator lamp ON (on front panel) and teach pendant display			
External input	4 system inputs and 4 general-purpose inputs			
External output	4 system outputs and 4 general-purpose outputs			
Communication function	For teach pendant × 1 channel (RS232C)			
Power supply voltage	AC100V~120V, AC200V~240V, ±10% 50/60Hz Changeover of 100 V or 200 V circuit by short-bar on front terminal block.			AC200V~230V, ±10% 50/60Hz
Power capacity (per 1 axis)	100VA	160VA	450VA	760VA
Noise resistance	1500 Vp-p, pulse width 1 μs (by noise simulator)			
Ambient conditions	Room temperature 0 - 40°C, humidity 30 % - 90 %RH, non-condensing and no corrosive gas present.			
Dimensions	55(W) × 160(H) × 134(D) (excluding metal fixtures)			85(W) × 160(H) × 134(D) (excluding metal fixtures)
Weight	0.93kg			1.36kg

Note 1: When using KCA-20-M40, be sure to use regenerative discharge unit KCA-ABSU-4000.

[I/O specifications]

Type of: controller: KCA-20-M10, KCA-20-M40

Input specifications	
Input rating	24VDC, 10 mA/ point
Insulation	Bilateral photo-coupler
Power supply	Externally supplied (24VDC).

Output specifications	
Output	Transistor output (open collector)
Output capacity (24VDC)	System output: Max. 300 mA/ point General-purpose output: Max. 300 mA/ point

[I/O pin number and signal name]

Type of: controller: KCA-20-M10, KCA-20-M40

* See Pages 231-234 of Technical Notes for I/O connections.

Connector pin arrangement on panel side

(Bottom view)

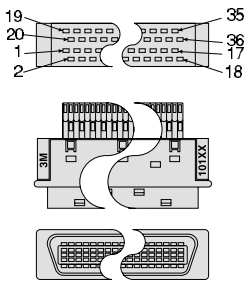

No.	I/O	Signal name		No.	I/O	Signal name	
1		+COM1		19		COM3	
2	Output	General-purpose output port 1-1		20	Input	General-purpose input port 1-1	
3	Output	General-purpose output port 1-2		21	Input	General-purpose input port 1-2	
4	Output	General-purpose output port 1-3		22	Input	General-purpose input port 1-3	
5	Output	General-purpose output port 1-4		23	Input	General-purpose input port 1-4	
6		–COM1		24		NC	
7		Emergency stop output (N.O)		25		Emergency stop input	
8		Emergency stop output (COM)		26		Emergency stop input	
9		Emergency stop output (N.C)		27		COM4	COM4
10		NC		28	Input	Home return	–
11	Output	Running	–	29	Input	Start	Servo ON
12	Output	Error	Error	30	Input	Stop	Counter clear
13	Output	Positioning finish	Positioning finish	31	Input	Reset	Reset
14	Output	Home return finish	–	32		NC	
15	Output	Home position LS	Home position LS	33	Input	+CLK / ±CLK	(+)
16	Output	Z-phase signal	Z-phase signal	34		↑	(–)
17		–COM2	–COM2	35	Input	−CLK / SIGN	(+)
18		NC		36		↑	(–)

Signals when the pulse train input mode is selected.

NC: No Connection

* One (1) plug is attached for I/O connector connection. An I/O cable with plug is also available optionally.

Discontinue

[Dimensions]

Controller Type: KCA-20-M10

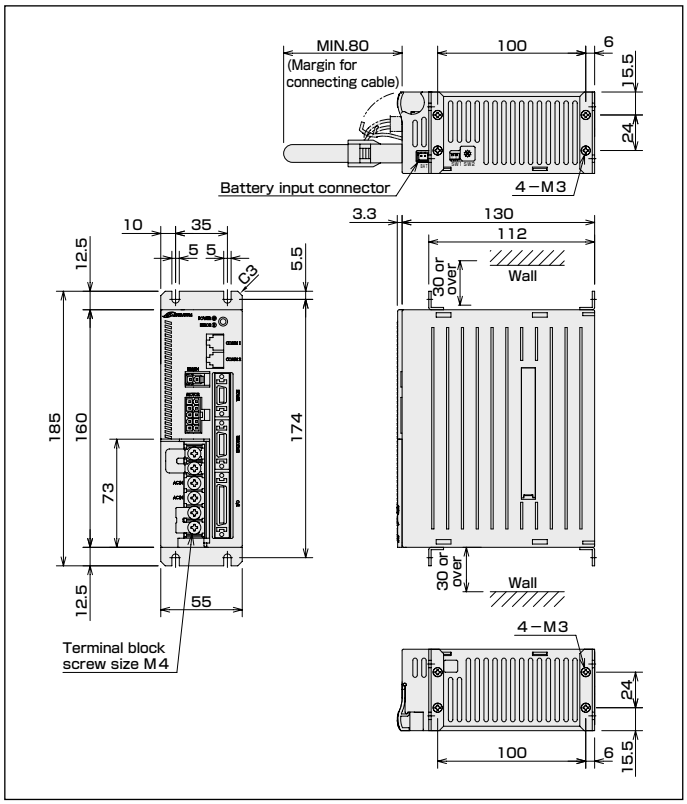

Controller Type: KCA-20-M40

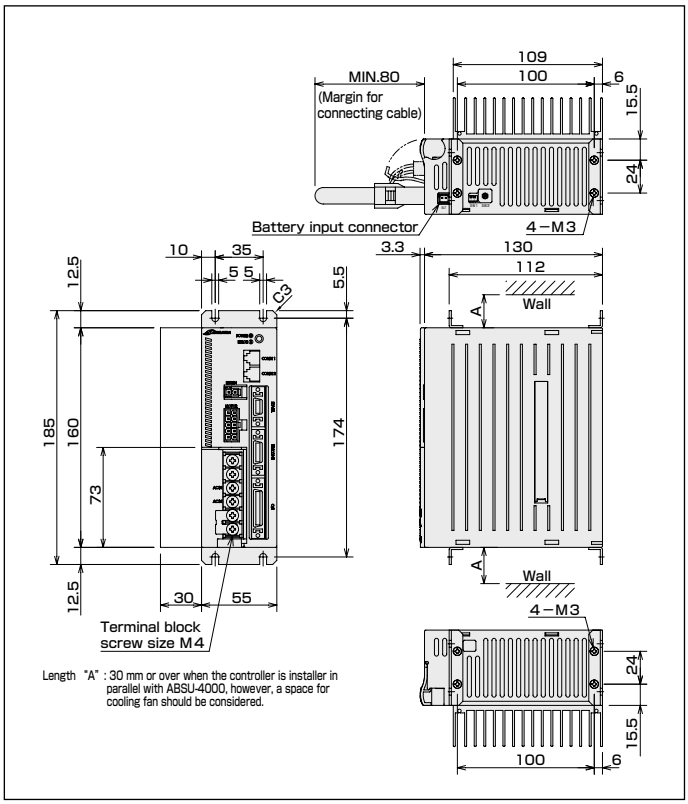

[Parts name]

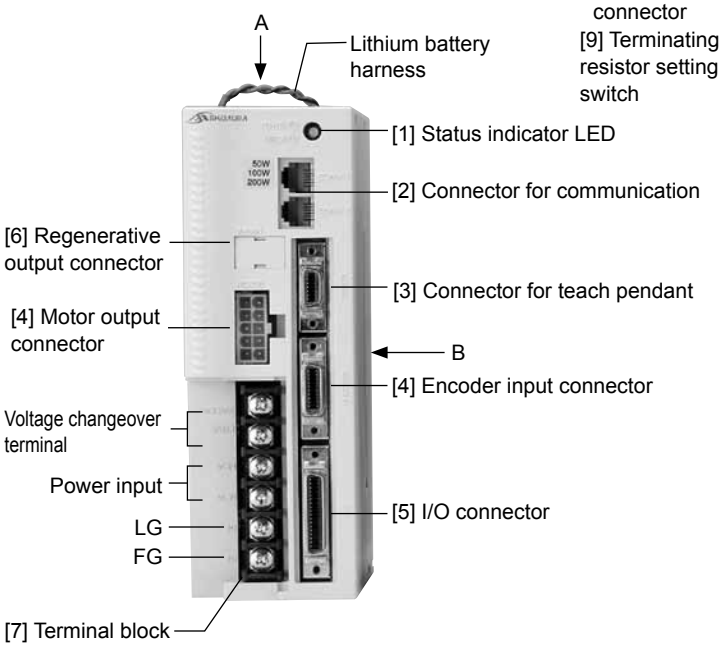

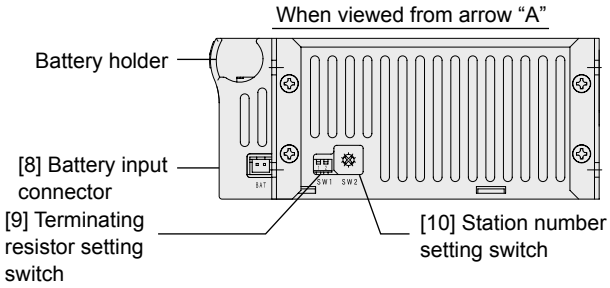

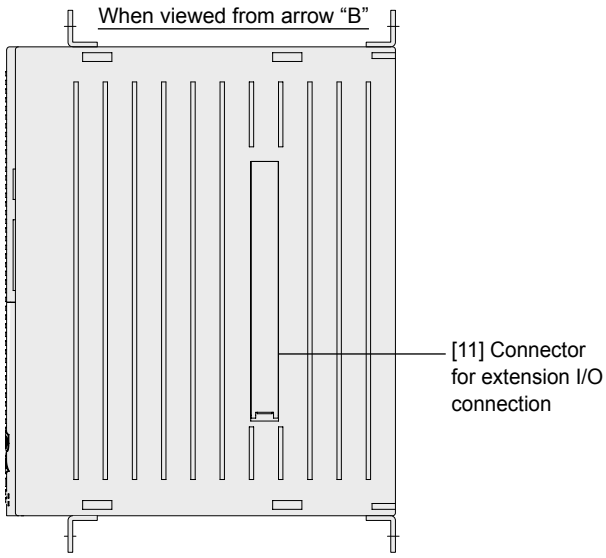

[1] Status indicator LED
Indicates the controller status. When the power is turned on, it is illuminated in green. In case of an error, it is illuminated in red.

[2] Connector for communication
Used to connect a link cable for connecting a slave unit.

[3] Connector for teach pendant
Used to connect a communication cable (option) for connecting the teach pendant or personal computer.

[4] Motor output connector and encoder input connector
Used to connect a controller cable.

[5] I/O connector
Used to connect an external control device such as sequencer (PLC).

[6] Regenerative output connector
Used to connect a regenerative discharge unit (option). To connect, remove the cover.

[7] Terminal block
A power input terminal, master power voltage changeover terminal, FG (frame ground) and LG (line ground) terminals are equipped.

[8] Battery input connector
Used to connect a lithium battery for encoder backup. This connector is used when an absolute encoder is used.

[9] Terminating resistor setting switch
Used to set the terminating resistor for communication when a slave unit is connected.

[10] Station number setting switch
Used to specify the station number of each slave unit when slave units are connected to control multiple axes. Specify zero (0) for the master unit.

[11] Connector for extension I/O connection
Used to connect an extension I/O unit (option). To connect, remove the cover.

High-Performance Master Unit KCA-20-M00

[Common Features of the KCA-20-M00]

Enables connection with all KBB series, KBZ' series.

* Enables simultaneous control of up to four axes
* Enables use of CC-Link and DeviceNet for interfaces with external devices
* CC-Link interface can be used for data communication in various input/output, coordinate table, status, and jog operations.
* DeviceNet interface can be used for data communication in various input/output and jog operations.
* Includes 2D and 3D linear interpolation and circular interpolation and path functions for enabling operations where path tracking is important
* Enables general-purpose output control ON and OFF at the coordinates specified during robot movement (command word: OUTS)
* Enables changing of target position in coordinate data received by RS-232C communication while the axis is moving toward a specified coordinate (command word: RSMV)
* Includes multitask function which allows execution of up to four tasks for input/output control in sequential mode (one task only during axis operation)
* Teach pendant KCA-TPH-4C is used.

[How to order]

KCA − 20 − M 00 − 0 0

Controller Type	Field-Bus interface
M: master unit	0: None C: CC-Link D: DeviceNet

KCA−20−M00−00

KCA−20−M00−C0

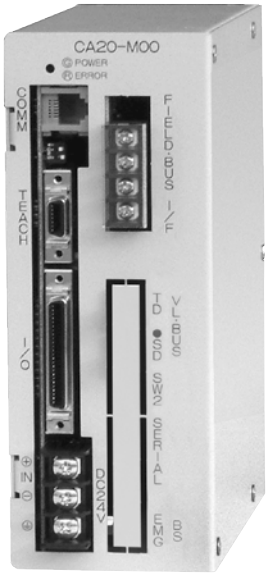

Discontinue

[KCA−20−M00 system configuration]

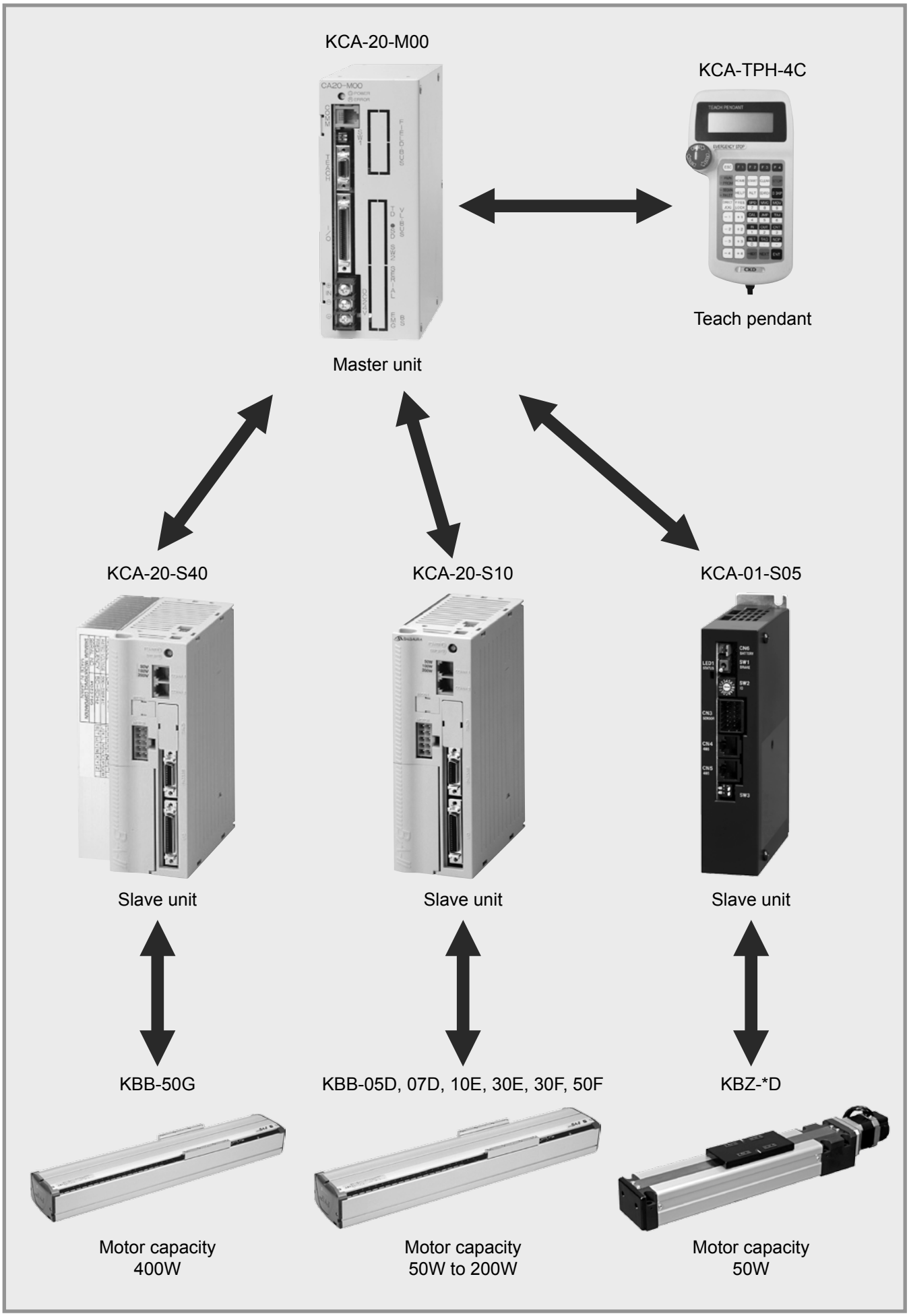

Controller

[General specifications]

Type of controller	KCA-20-M00
No. of controlled axes	One axis control or simultaneous control of up to four axes by connecting slave units.
Control system	CP control, PTP control, semi-closed loop control
Interpolation	Three-dimensional linear interpolation and circular interpolation
Encoder signal	Line driver communication
Teaching method	Remote teaching, direct teaching or MDI
Speed and acceleration	Speed: 10 steps (variable) Acceleration: 20 steps (variable)
Operation method	Step, continuous, single
Operation mode	Sequential (multitask) (Note 1) Palletizing, Easy External point designation
No. of programs	Sequential: 16, Palletizing: 16, Easy: 8
No. of steps	Max. 2,500 steps (Note 2)
Coordinate table	Each task: 999
No. of counters	99
No. of timers	9
Memory	FRAM
CPU	32-bit (RISC CPU, SH7085)
Master power voltage	24VDC±10% 0.5A (externally supplied)

Self-diagnosis function	CPU down, memory error, driver error, master power voltage error, program error, etc.
Alarm display	Error indicator LED_and teach pendant display
External input	4 system inputs and 20 general-purpose inputs (Note 3)
External output	4 system outputs and 12 general-purpose outputs (Note 3)
Communication function	Without VL-Bus interface 1 CH (RS232C), for a teach pendant With VL-Bus interface 1 CH (RS232C), for a teach pendant
Power supply for driving external device	Output power supply is not available. (Power is supplied externally.)
Emergency stop I/O	No-voltage input (contact input) and relay C contact output
Noise resistance	1500 Vp-p, pulse width 1 μs (by noise simulator)
Ambient conditions	Room temperature 0 - 40°C, humidity 30 % - 90 %RH, non-condensing and no corrosive gas present.
Dimensions	65 (W) × 170 (H) × 150 (D) (excluding metal fixtures)
Weight	1.2 kg (excluding the oprional substrate)

Note 1: Multitask: Up to four tasks (one task only for axis control) are available.
Note 2: Varies with a mode to be used.
Note 3: If the Field-Bus interface specification is selected, refer to the interface specifications on pages 198 and 199.

[I/O specifications]

Input specifications	
Input rating	24VDC, 7 mA/1 point
Insulation	Photo-coupler
Power supply	Externally supplied (24VDC).

Output specifications	
Output	Transistor output (open collector)
Output capacity (24VDC)	System output: Max. 20 mA/ point
	General-purpose output: Max. 300 mA/ point

[I/O pin number and signal name]

Connector pin arrangement on panel side

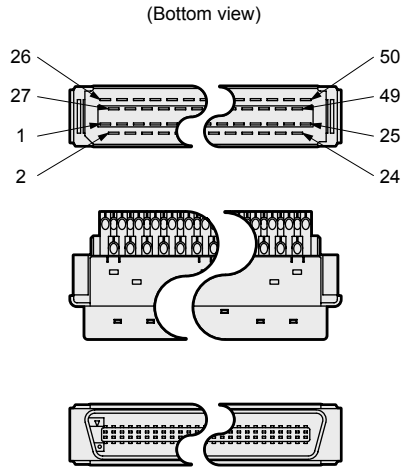

No.	Signal name	No.	Signal name
1	+COM1 (Note 1)	26	General-purpose input port 1-1
2	General-purpose output port 1-1	27	General-purpose input port 1-2
3	General-purpose output port 1-2	28	General-purpose input port 1-3
4	General-purpose output port 1-3	29	General-purpose input port 1-4
5	General-purpose output port 1-4	30	General-purpose input port 1-5
6	General-purpose output port 1-5	31	General-purpose input port 1-6
7	General-purpose output port 1-6	32	General-purpose input port 1-7
8	General-purpose output port 1-7	33	General-purpose input port 1-8
9	General-purpose output port 1-8	34	General-purpose input port 2-1
10	General-purpose output port 2-1	35	General-purpose input port 2-2
11	General-purpose output port 2-2	36	General-purpose input port 2-3
12	General-purpose output port 2-3	37	General-purpose input port 2-4
13	General-purpose output port 2-4	38	General-purpose input port 2-5
14	–COM1 (Note 1)	39	General-purpose input port 2-6
15	–COM1 (Note 1)	40	General-purpose input port 2-7
16	+COM2 (Note 1)	41	General-purpose input port 2-8
17	Running	42	General-purpose input port 3-1
18	Error	43	General-purpose input port 3-2
19	Positioning finish	44	General-purpose input port 3-3
20	Home return finish	45	General-purpose input port 3-4
21	Home return	46	Emergency stop input
22	Start	47	Emergency stop input
23	Stop	48	Emergency stop output (N.O)
24	Reset	49	Emergency stop output (COM)
25	–COM2 (Note 1)	50	Emergency stop output (N.C)

Note 1: No internal connection between +COM1 and +COM2, or between -COM1 and -COM2.
* One (1) plug is attached for I/O connector connection. An I/O cable with plug is also available optionally.

Discontinue

[CC-Link interface specifications]

Item	Specifications
Communication specifications	CC-Link Ver. 1.10
Baud rate	10M, 5M, 2.5M, 625k, 156kbps (set by parameters)
Station type	Remote device station
Number of occupied stations	Fixed at 4 stations (RX/RY: 128 points each, RWw/RWr: 16 points each)
Station number setting	1 to 61 (set by parameters)
Number of inputs/outputs	4 system inputs, 4 system outputs
	64 general-purpose inputs, 64 general-purpose outputs
	8 jog inputs, 8 jog outputs
	1 handshake input, 2 handshake outputs
	4 data selection inputs, 4 data selection confirmation outputs
Data communication function	Coordinate table transmission, current position monitor, error code request, status request, and more

* These are the inputs and outputs as seen from the robot controller.

[I/O Signal List]

Signal direction CC-Link master station ← KCA-20-M00		Signal direction CC-Link master station → KCA-20-M00	
Device no. (input)	Signal name	Device no. (output)	Signal name
RXn0	Output during operation	RYn0	Home return input (*2)
RXn1	Error output	RYn1	Start input (*2)
RXn2	Positioning complete output	RYn2	Stop input (*2)
RXn3	Home return complete output	RYn3	Reset input (*2)
RXn4~RXn7	Usage prohibited	RYn4~RYn7	Usage prohibited
RXn8~RXnF	General-purpose output port 1-1 to 1-8	RYn8~RYnF	General-purpose input port 1-1 to 1-8 (*2)
RX(n+1)0~RX(n+1)7	General-purpose output port 2-1 to 2-8	RX(n+1)0~RX(n+1)7	General-purpose input port 2-1 to 2-8 (*2)
RX(n+1)8~RX(n+1)F	General-purpose output port 3-1 to 3-8	RX(n+1)8~RX(n+1)F	General-purpose input port 3-1 to 3-8 (*2)
RX(n+2)0~RX(n+2)7	General-purpose output port 4-1 to 4-8	RX(n+2)0~RX(n+2)7	General-purpose input port 4-1 to 4-8
RX(n+2)8~RX(n+2)F	General-purpose output port 5-1 to 5-8	RX(n+2)8~RX(n+2)F	General-purpose input port 5-1 to 5-8
RX(n+3)0~RX(n+3)7	General-purpose output port 6-1 to 6-8	RX(n+3)0~RX(n+3)7	General-purpose input port 6-1 to 6-8
RX(n+3)8~RX(n+3)F	General-purpose output port 7-1 to 7-8	RX(n+3)8~RX(n+3)F	General-purpose input port 7-1 to 7-8
RX(n+4)0~RX(n+4)7	General-purpose output port 8-1 to 8-8	RX(n+4)0~RX(n+4)7	General-purpose input port 8-1 to 8-8
RX(n+4)8~RX(n+4)F	Jog output	RX(n+4)8~RX(n+4)F	Jog input
RX(n+5)0~RX(n+5)7	Reserved	RX(n+5)0~RX(n+5)7	Reserved
RX(n+5)8~RX(n+5)F		RX(n+5)8~RX(n+5)F	
RX(n+6)0~RX(n+6)7		RX(n+6)0~RX(n+6)7	
RX(n+6)8	Command processing completed (*1)	RX(n+6)8	Command processing request (*1)
RX(n+6)9	Command error (*1)	RX(n+6)9	Usage prohibited
RX(n+6)A~RX(n+6)B	Usage prohibited	RX(n+6)A~RX(n+6)B	Usage prohibited
RX(n+6)C~RX(n+6)F	Data selection confirmation output	RX(n+6)C~RX(n+6)F	Data selection input
RX(n+7)0~RX(n+7)7	Usage prohibited	RX(n+7)0~RX(n+7)7	Usage prohibited
RX(n+7)8~RX(n+7)F	Usage prohibited	RX(n+7)8~RX(n+7)F	Usage prohibited

n: Address assigned to the master unit by the station number setting
*1: Handshake signals for data communication
*2: Usage of system input and general-purpose input port 1 is selected based on the parameters.

[CC-Link Status Indicator LEDs]

LED name	Color	On/Off	Description
RUN	Green	On	During normal operation
		Off	During timeout or network stoppage
ERR	Red	On	CRC error, abnormal speed, invalid station number setting
		Off	During normal operation
SD	Green	On	During data sending
		Off	When not receiving data
RD	Green	On	During data reception
		Off	When not receiving data

[DeviceNet Specifications]

Item	Specifications		
Communication protocol	Compliant with DeviceNet		
Supported connection	I/O connection (polling)		
Baud rate	125k, 250k, 500kbps (set by parameters)		
Station number setting	0 to 63 (set by parameters)		
Cable length	Baud rate	Thick cable	Think cable
	125k	500m	100m
	250k	250m	
	500k	100m	
Number of occupied stations	Sending: 128 points Receiving: 128 points		
Number of inputs/outputs (*1)	4 system inputs, 4 system outputs		
	64 general-purpose inputs, 64 general-purpose outputs		
	8 jog inputs, 8 jog outputs		
Device type	0 (Generic Device)		

* These are the inputs and outputs as seen from the robot controller.

[I/O Signal List]

Signal direction DeviceNet master station ← KCA-20-M00		Signal direction DeviceNet master station → KCA-20-M00 (*1)	
Input device no. (offset *2)	Signal name	Output device no. (offset *2)	Signal name
+0	Output during operation	+0	Home return input (*3)
+1	Error output	+1	Start input (*3)
+2	Positioning complete output	+2	Stop input (*3)
+3	Home return complete output	+3	Reset input (*3)
+4 to +7	Usage prohibited	+4 to +7	Usage prohibited
+8 to +15	General-purpose output port 1-1 to 1-8	+8 to +15	General-purpose input port 1-1 to 1-8 (*3)
+16 to +23	General-purpose output port 2-1 to 2-8	+16 to +23	General-purpose input port 2-1 to 2-8 (*3)
+24 to +31	General-purpose output port 3-1 to 3-8	+24 to +31	General-purpose input port 3-1 to 3-8 (*3)
+32 to +39	General-purpose output port 4-1 to 4-8	+32 to +39	General-purpose input port 4-1 to 4-8
+40 to +47	General-purpose output port 5-1 to 5-8	+40 to +47	General-purpose input port 5-1 to 5-8
+48 to +55	General-purpose output port 6-1 to 6-8	+48 to +55	General-purpose input port 6-1 to 6-8
+56 to +63	General-purpose output port 7-1 to 7-8	+56 to +63	General-purpose input port 7-1 to 7-8
+64 to +71	General-purpose output port 8-1 to 8-8	+64 to +71	General-purpose input port 8-1 to 8-8
+72 to +79	Jog output	+72 to +79	Jog input
+80 to +127	Reserved	+80 to +127	Reserved

*1: If DeviceNet communication is cut off, stop input is set to 1, and all others are cleared to 0.
During teach pendant operation, however, the stop input is also cleared to 0.
*2: Offset amount from the starting device (unit: bits)
*3: Usage of system input and general-purpose input port 1 is selected based on the parameters.

[DeviceNet Status Indicator LEDs]

LED name	Color	On/Off		Description
MS	Green	● On	Normal	Normal status
		★Flashing	Unset status	This indicates an error in the master unit setting values. Check the settings and restart. This can also indicate standby mode. Check if the master unit has started normally.
	Red	● On	Critical error	A hardware error has occurred (DPRAM, internal ROM, internal RAM, EEPROM, CAN error, WDT error, etc.). Restart. If the error occurs again, replace the unit.
		★Flashing	Minor error	The user settings are invalid, and a user-side interrupt timeout has occurred. Check and correct the settings, and then restart.
	Green/Red	○ Off	No power supply	No power is being supplied, or initialization or other process is in progress. Check the power supply.
NS	Green	● On	Normal	One or more connections is established (running) in an online state.
		★Flashing	Standing by for connection	The master unit did not start normally. (This also includes a master unit I/O area configuration error.) Check whether the master unit has started normally.
	Red	● On	Critical communication error	A communication error has occurred (duplication of node address, busoff detection, baud rate mismatch, etc). Check the connection status, noise, node address settings, baud rate settings, and other parameters, and then restart.
		★Flashing	Minor communication error	Communication with the master unit has timed out. Check the status of the master unit and the connection status, noise, node address settings, baud rate settings, and other parameters, and then restart.
	Green/Red	○ Off	No power supply	Either no power is being supplied, or a WDT error occurred, a baud rate check is being performed, or a node address duplication check is being performed. Check the power supply.

* The LED lighting interval is 0.5 seconds on and 0.5 seconds off.

Discontinue

[Dimensions]

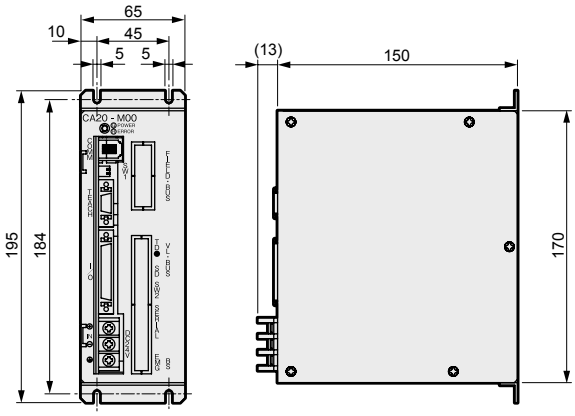

KCA-20-M00

[Parts name]

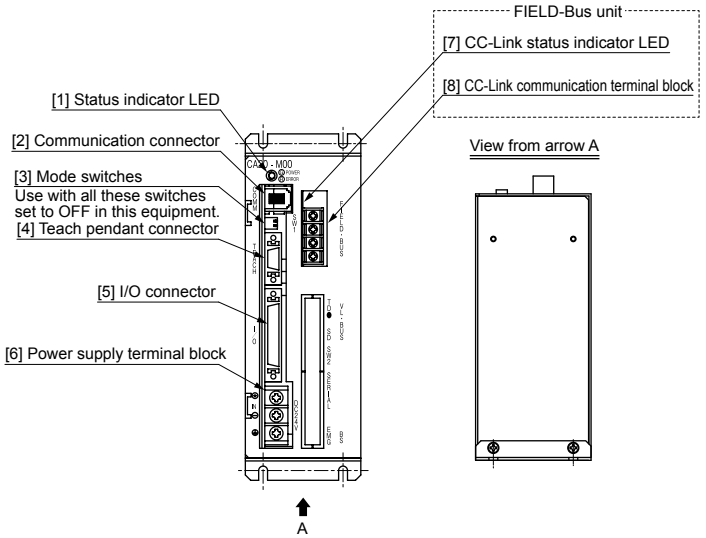

KCA-20-M00-C0

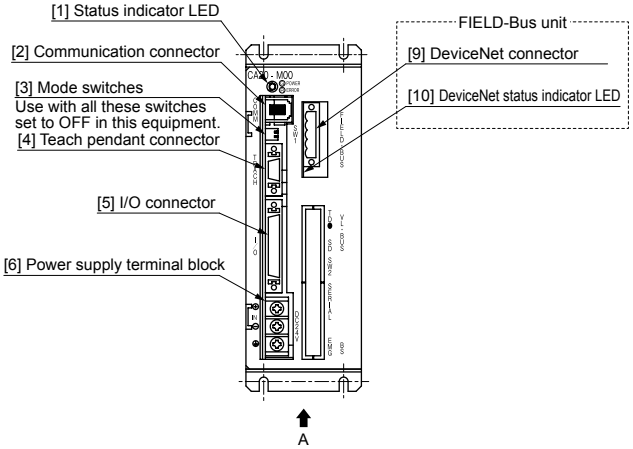

KCA-20-M00-D0

[1] Status indicator LED
This is an LED that indicates the controller status. It becomes solid green when the power is on, and it becomes solid red when an error occurs.

[2] Communication connector
This is a connector for connecting a link cable to the slave unit.

[3] Mode switches
These are not used in this equipment. Use with all these switches set to OFF.

[4] Teach pendant connector
This is a connector for connecting a teach pendant or computer connection cable (option).

[5] I/O connector
This connects external control devices (such as a sequencer).

[6] Power supply terminal block
This provides power supply input terminals and FG (frame ground) terminals.

[7] CC-Link status indicator LED (option)
This indicates the CC-Link status.

[8] CC-Link communication terminal block (option)
This is a terminal block for connecting a dedicated CC-Link cable for establishing a data link.

[9] DeviceNet connector (option)
This is a connector for connecting a dedicated DeviceNet cable for establishing a data link.

[10] DeviceNet status indicator LED (option)
This indicates the DeviceNet status.

Discontinue

Slave Unit

* Used as an auxiliary unit when controlling the master unit or high-performance master unit.
* A driver unit for one axis control is built in this unit.
* For the supply power, multi power (AC100 V-120 V, 200 V-240 V) is used to cope with globalized production.

KCA-20-S10

KCA-20-S40

Applicable type of axis
KCA-20-S10: KBB-05D, KBB-07D, KBB-10E, KBB-30E, KBB-30F, KBB-50F
KCA-20-S40: KBB-50G
Both the ball screw driven axis and timing belt driven axis of each axis can be controlled.

[How to order]

KCA-20 - S 10 ☐

Motor capacity
10 : 50~200W
40 : 400W

Version
Blank

* One (1) plug for connecting an I/O connector is attached to the slave unit. An I/O cable with plug is also available optionally.

[General specifications]

Type of controller	KCA-20-S10			KCA-20-S40 (Note 1)
No. of controlled axes	One axis control by connecting with a master unit.			
Motor capacity	50W	100W	200W	400W
Drive system	AC servo motor			
Alarm display	Error indicator lamp ON (on front panel) and teach pendant display (connected with a master unit)			
External input	8 points			
External output	8 points			
Power supply voltage	AC100V~120V, AC200V~240V, ±10% 50/60Hz Changeover of 100 V or 200 V circuit by short-bar on front terminal block.			AC200V~230V, ±10% 50/60Hz
Power capacity (per 1 axis)	100VA	160VA	450VA	760VA
Noise resistance	1500 Vp-p, pulse width 1 μs (by noise simulator)			
Ambient conditions	Room temperature 0 – 40°C, humidity 30 % – 90 %RH, non-condensing and no corrosive gas present.			
Dimensions	55 (W) × 160 (H) × 134 (D) (excluding metal fixtures)			85 (W) × 160 (H) × 134 (D) (excluding metal fixtures)
Weight	0.91kg			1.34kg

Note 1: When using KCA-20-S40, be sure to use regenerative discharge unit KCA-ABSU-4000.

[I/O specifications]

Type of: controller: KCA-20-S10, KCA-20-S40

Input specifications	
Input rating	24VDC, 10 mA/1 point
Insulation	Bilateral photo-coupler
Power supply voltage	Externally supplied (24VDC).

Output specifications	
Output	Transistor output (open collector)
Output capacity (24VDC)	General-purpose output 1-1 through 1-8: Max. 300 mA/ point

Discontinue

[I/O pin number and signal name]

Type of: controller: KCA-20-S10, KCA-20-S40

* See Page 233 of Technical Notes for I/O connections.

Connector pin arrangement on panel side	No.	I/O	Signal name	No.	I/O	Signal name
(BOTTOM VIEW) 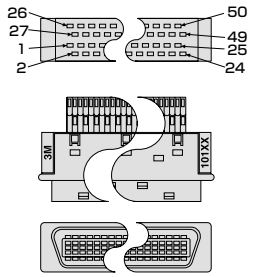	1		+COM1	19		COM3
	2	Output	General-purpose output port 1-1	20	Input	General-purpose input port 1-1
	3	Output	General-purpose output port 1-2	21	Input	General-purpose input port 1-2
	4	Output	General-purpose output port 1-3	22	Input	General-purpose input port 1-3
	5	Output	General-purpose output port 1-4	23	Input	General-purpose input port 1-4
	6		−COM1	24		NC
	7		Emergency stop output (N.O)	25		NC
	8		Emergency stop output	26		NC
	9		Emergency stop output (N.C)	27		COM4
	10		NC	28	Input	General-purpose input port 1-5
	11	Output	General-purpose output port 1-5	29	Input	General-purpose input port 1-6
	12	Output	General-purpose output port 1-6	30	Input	General-purpose input port 1-7
	13	Output	General-purpose output port 1-7	31	Input	General-purpose input port 1-8
	14	Output	General-purpose output port 1-8	32		NC
	15		NC	33		NC
	16		NC	34		NC
	17		−COM2	35		NC
	18		NC	36		NC

NC: No Connection

[Dimensions]

Type of controller: KCA-20-S10

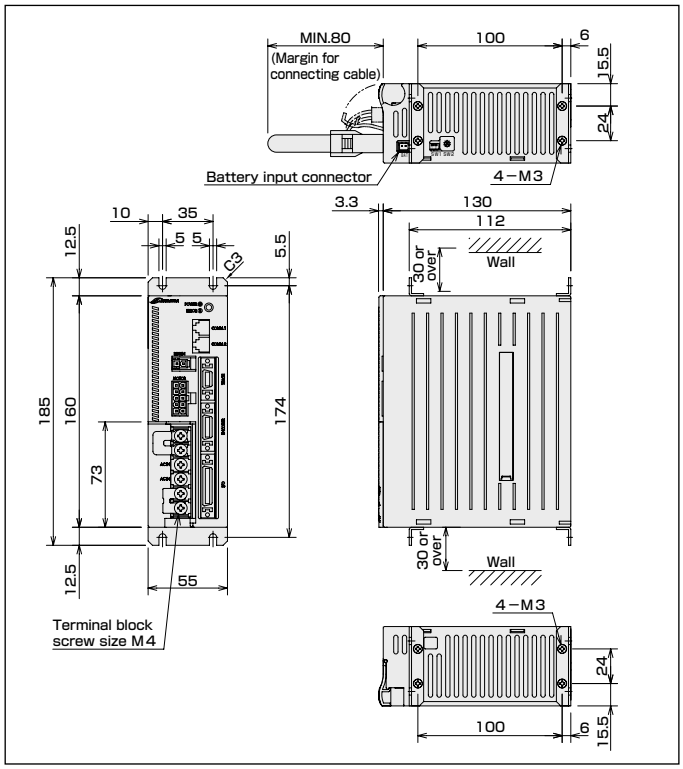

Type of controller: KCA-20-S40

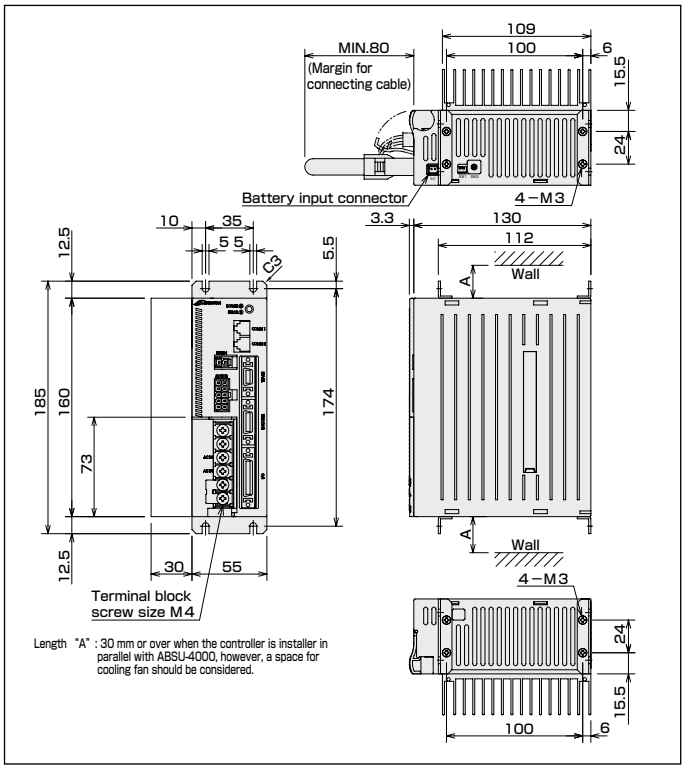

[Parts name]

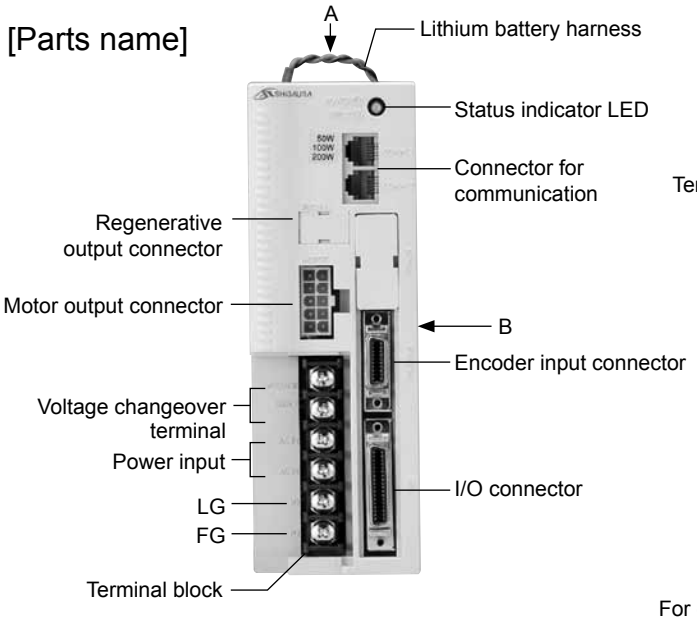

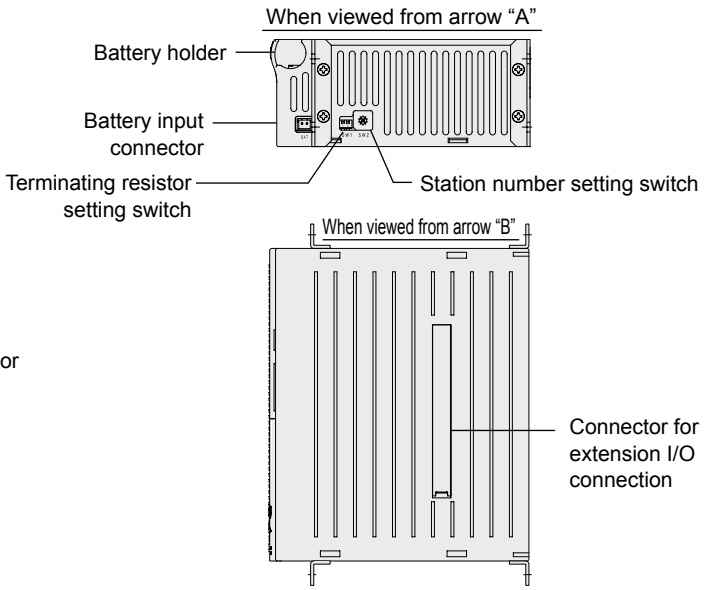

For details on each part, see the descriptions on the master unit on Page 200.

Link Cable

[Application]

Used for communication between the master unit serving as the main controller and the slave unit which operates under commands given from the main controller.
This cable is not required when a signal axis is controlled and only the master unit is used.
This link cable connects the master unit with each slave unit in series.
The cable length differs when the master and slave units are mounted closely and when they are installed separately from each other.

[How to order]

KCA-10 - LC - A 01

- LC: Link cable
- 01: Cable length
  - 01: 150mm
  - 03: 300mm
  - 10: 1000mm
- A: Version
  - Blank

* A link cable must not be bundled together with other signal cables or must not run in the same cable (or wire) duct where other cables run.
* A link cable is equipped with plugs on both ends. It cannot be cut or reworked.

[Dimensions]

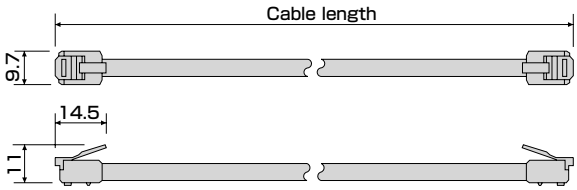

Cable length (mm)
150
300
1000

Discontinue

Regenerative Discharge Unit

[Application]

The regenerative discharge unit is designed to absorb excess energy generated in an actuator (or axis) motor during deceleration. The unit is useful when load inertia exceeds the tolerance, or when a heavy load is descended along the Z-axis over a long stroke (generating excessive electricity). (The unit prevents overvoltage generated in the controller.)

KCA-ABSU-2000

KCA-ABSU-4000

[How to order]

K C A - A B S U - 2 0 0 0

Applicable controller
2: KCA-20-M10 · KCA-20-S10
4: KCA-20-M40 · KCA-20-S40

* All discharge energy is converted into heat.
* If the discharge circuit of the regenerative discharge unit has overheated, it is signaled by contact output (N.C).
* One unit is needed per axis, and can be connected to the master or slave unit when necessary.

[Dimensions]

KCA-ABSU-2000

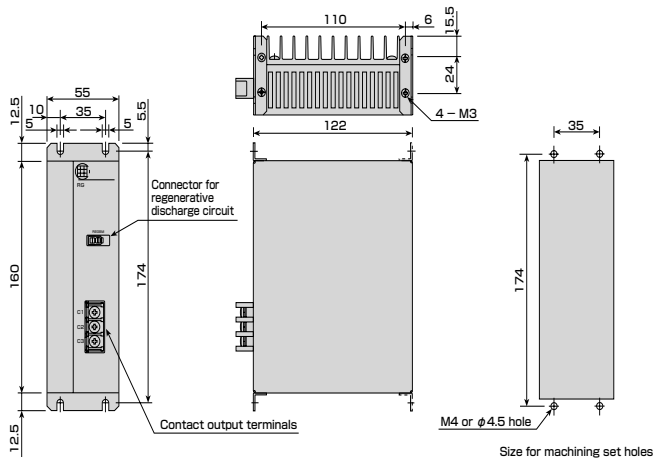

KCA-ABSU-4000

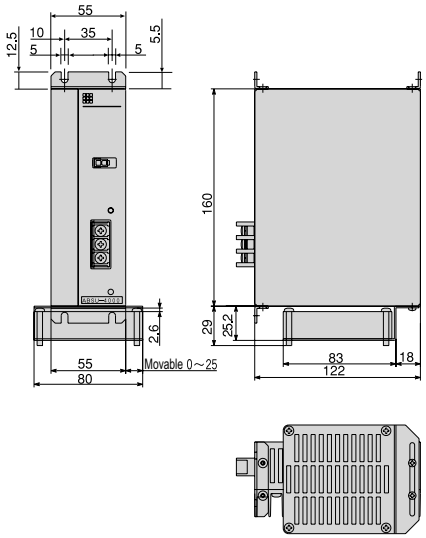

Accessories: L-shaped bracket, cable (300 mm)

[Example connection]

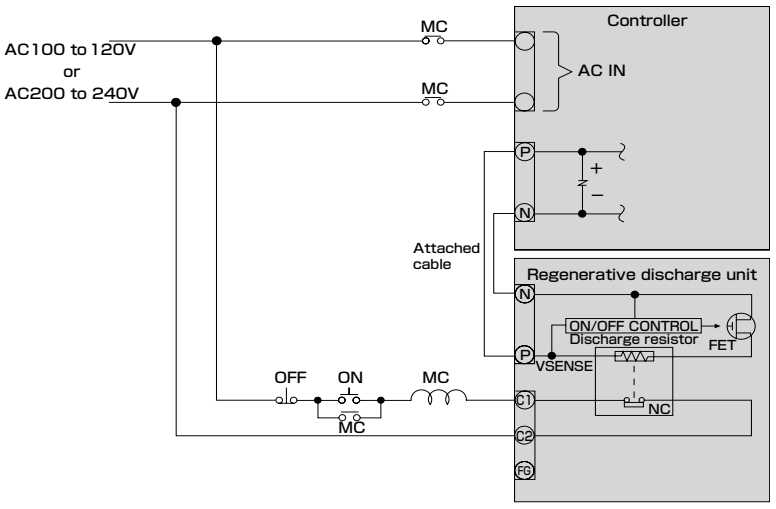

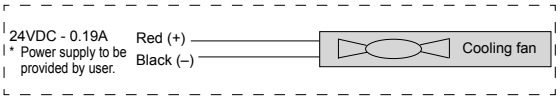

A cooling fan is attached to ABSU-4000 alone.

- A thermal relay which operates at the temperature of 150°C is incorporated in the discharge resistor of the regenerative discharge unit.
- When this relay has operated, output terminals C1 to C2 of the regenerative discharge unit is set open.
- Program a sequence so that the controller power is always turned of

Discontinue

Teach pendant

[Application]

When the teach pendant is connected with a controller, it can serve as a program and parameter input device, and can give commands for executing motions including home establishment, start, stop, jog motion and emergency stop. The teach pendant also displays and resets an error or fault when it has been generated.

[How to order]

KCA-TPH-4C

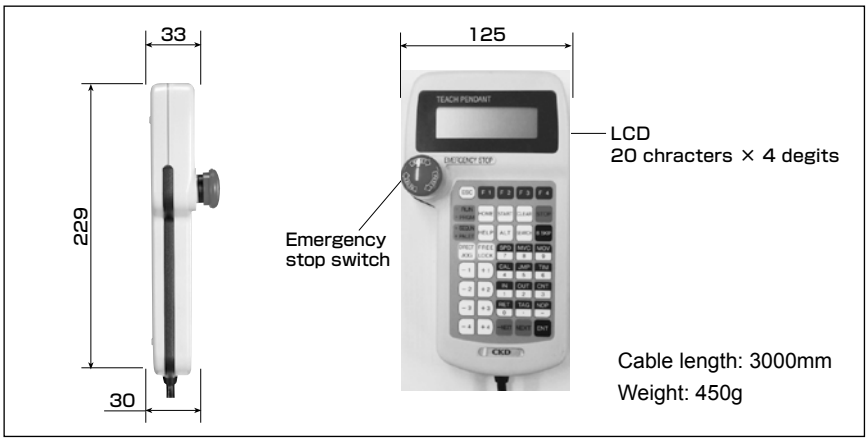

Select either type according to a controller you wish to use.

Correspondence table of controller and teach pendant

○ -marked : Can be used.

Controller		KCA-TPH-4C (Ver2.40 or over) *
Series	Type	
KBB series carried in this manual	KCA-20-M10	○
	KCA-20-M40	○
	KCA-10-M00B	○
	KCA-10-M01B	○
Former model KBA	KCA-10-M10	○
	KCA-10-M40	○
	KCA-10-M00	○
	KCA-10-M01	○

* The version number can be confirmed in the parameter by connecting the teach pendant with the controller.

Discontinue

Extension I/O Unit

[Application]

The extension I/O unit can increase the number of general-purpose inputs and outputs when general-purpose inputs and outputs of controllers (master and slave units) alone are not enough.
The number of extension I/O units that can be connected with each controller is one.
The extension I/O unit is connected to the controller directly via a connector on its side. For the number of inputs and outputs, see the specifications.

[How to order]

KCA-20 - EX - A 20 □

Extension I/O unit

Version
Blank

KCA-20-EX-A20

[Applicable controller]

KCA-20-M10, KCA-20-M40, KCA-20-S10, KCA-20-S40

[Specifications]

Input		Output	
No. of inputs	12 points	No. of outputs	8 points
Input rating	24VDC, 10 mA/ point	Output signal	Transistor output (open collector)
Insulation	Photo-coupler	Output rating	24VDC, max. 300 mA/ point
Common	Common to entire 1 circuit	Insulation	Photo-coupler
External connection	Connector (shared with output)	Common	Common to entire 1 circuit

* Power supply for external devices is not incorporated.

[Input pin number and signal name]

* See Page 234 of Technical Notes for I/O connections.

Connector pin arrangement on panel side	No.	I/O	Signal name	No.	I/O	Signal name
(Bottom view)	1		+COM5	14		COM6
	2	Output	General-purpose output port 2-1	15	Input	General-purpose input port 2-1
	3	Output	General-purpose output port 2-2	16	Input	General-purpose input port 2-2
	4	Output	General-purpose output port 2-3	17	Input	General-purpose input port 2-3
	5	Output	General-purpose output port 2-4	18	Input	General-purpose input port 2-4
	6	Output	General-purpose output port 2-5	19	Input	General-purpose input port 2-5
	7	Output	General-purpose output port 2-6	20	Input	General-purpose input port 2-6
	8	Output	General-purpose output port 2-7	21	Input	General-purpose input port 2-7
	9	Output	General-purpose output port 2-8	22	Input	General-purpose input port 2-8
	10		NC	23	Input	General-purpose input port 3-1
	11		NC	24	Input	General-purpose input port 3-2
	12		NC	25	Input	General-purpose input port 3-3
	13		−COM5	26	Input	General-purpose input port 3-4

* For I/O connection, use an attached plug or separately available I/O cable unit (for extension I/O).

NC: No Connection

[Dimensions]

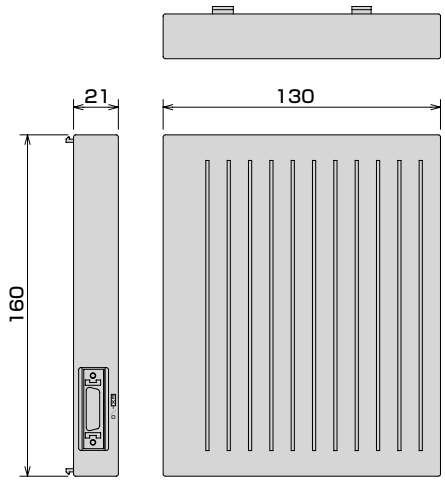

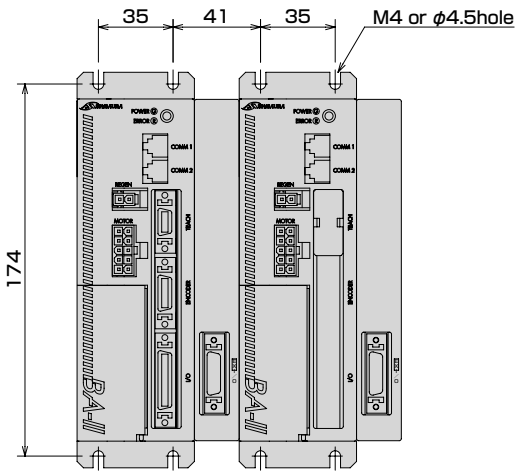

Parallel mounting of “master unit” + “extension I/O unit” + “slave unit” + “extension I/O unit”

Options

MEMO

Discontinue

I/O Cable

[Application]

Used to connect a controller (master unit, slave unit) or an I/O port of an extension I/O unit to transmit signals with an external operation panel or control device.
A plug is attached to one side of the cable, which can be connected directly to the controller.
The I/O cable should be connected to an external device according to the color marking put on the cable core leads and the sign table.
Before connecting the external device, the cable core leads should be treated with a crimp-terminal.

[How to order]

KCA-10 - IC - A 30 [ ]

- KCA-10: I/O cable
- IC: Type of cable
- A: Type of cable — A: For controller, B: For extension I/O
- 30: Cable length — 30: 3000mm, 50: 5000mm
- [ ]: Version — Blank

[Connecting unit]

Controller: KCA-20-M10, KCA-20-M40,
KCA-20-S10, KCA-20-S40
Extension I/O unit: KCA-20-EX-A20

* The I/O cables for controller and extension I/O differ in the number of cable core leads and plug. (For controller: 36-pin, for extension I/O: 26-pin)

[Dimensions]

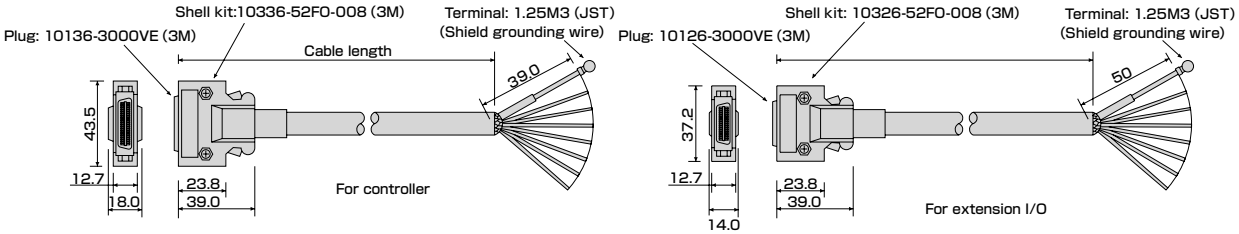

Type	No. of core leads	Core lead size	Outer dia.
KCA-10-IC-A□□	36	0.13sq	10.5mm

Type	No. of core leads	Core lead size	Outer dia.
KCA-10-IC-B□□	24	0.13sq	9.1mm

[How to order]

KCA - ICBL - 300

- 300: Cable length — 300: 3000mm, 500: 5000mm

[Unit connected]

Controller: KCA-10-M00B, KCA-10-M01B
Extension I/O unit: KCA-10-EX-B40

[Dimensions]

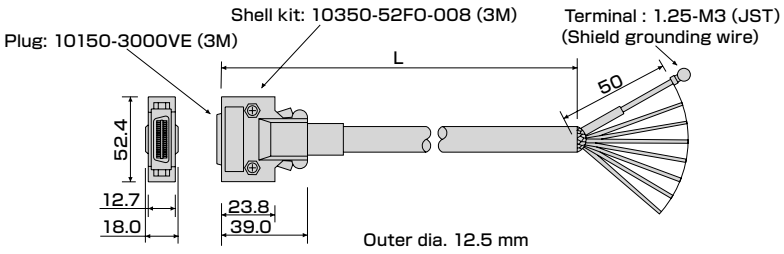

Type	No. of core leads	Core lead size	Outer dia.
KCA-ICBL-□□	50	0.13sq	12.5mm

* The I/O cable is shielded to improve noise resistance. Ground the shield wire as necessary.
* The I/O cable is not resistant to repeated bending.

Discontinue

Software for Personal Computer

[Application]

Software for personal computer KCA-SF-98D has been developed to support programming of the KBB series by using a personal computer as the host computer.
It is possible to transfer program data, etc. of the robot controller to the personal computer and vice versa, edit and save it, to monitor the I/O status and coordinate values and to execute a program, jog motion, home return, etc.
This software is optimized for debugging and maintenance.

[How to order]

KCA−SF − 98 D

Version

[Applicable controller]

All types: KCA-20-M10, KCA-20-M40, KCA-20-M00

[Specifications]

Contents of package		CD-ROM: 1 pc. Installation manual: 1 copy (Communication cable KCA-PCBL-31 is available for an extra price.)
System configuration required	Personal computer	Serial communication port (Din-sub 9-pin) IBM PC/AT compatible computer equipped with CD-ROM drive Available memory size: 12 MB or over Available hard disk size: 10 MB or over
	Operating system (OS)	Japanese version of Microsoft Windows95, Windows98, Windows Me, WindowsNT4.0, Windows2000 and Windows XP
	Display	SVGA or over (resolution 800 × 600 pixel, or over)
	Printer	Printer which can be connected with your personal computer and allows printing from Windows.
	Communication cable	Used to connect the personal computer and controller. Use PCBL-31.
Applicable controller		KBB series master unit (KCA-20-M10, KCA-20-M40, KCA-20-M00)

* Microsoft Windows, Microsoft Windows NT and Windows logotype are the registered trademarks or trademarks of Microsoft Corporation in the United States.

[Features]

- Programs can be edited easily by using the multi-window screen editor
- Programs and table data can be sent to and received from the robot controller. Additionally, such data can be saved as a file.
- Axis motions can be controlled by teaching or program execution.
- At printing of a program (i.e., output to the printer), a title and comment can be included. Thus, this software is very convenient for debugging and confirmation of data.

● Editing screen of sequence program

● Editing screen of coordinate table
Data in CSV format as created by using the Excel, etc. can also be input.

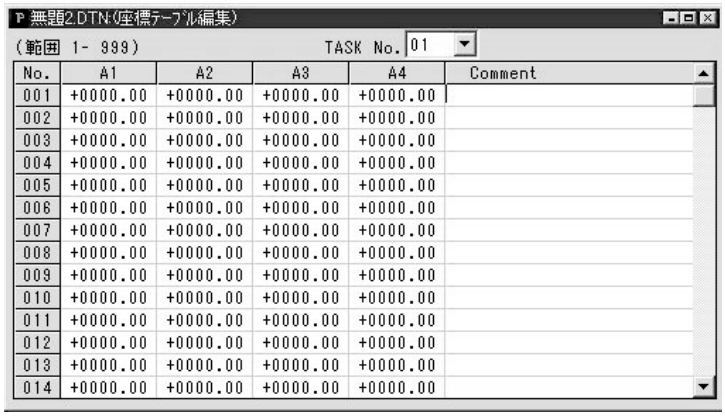

Discontinue

● Robot operation screen

Operations such as program execution and jog motion, which are the same as in the teach pendant, are possible.

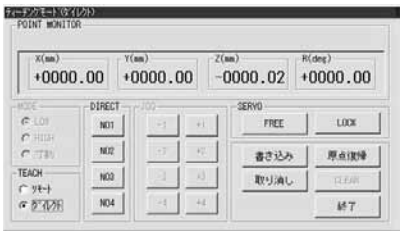

● Monitor screen

Current position coordinates, I/O port status can be monitored.

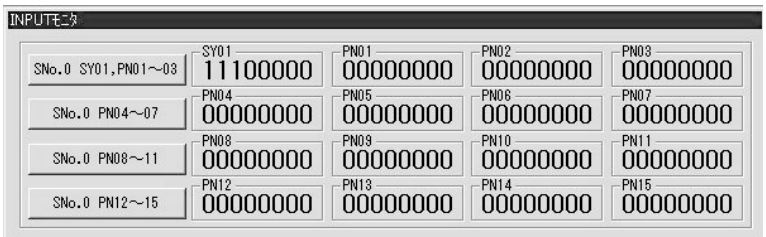

[Connections]

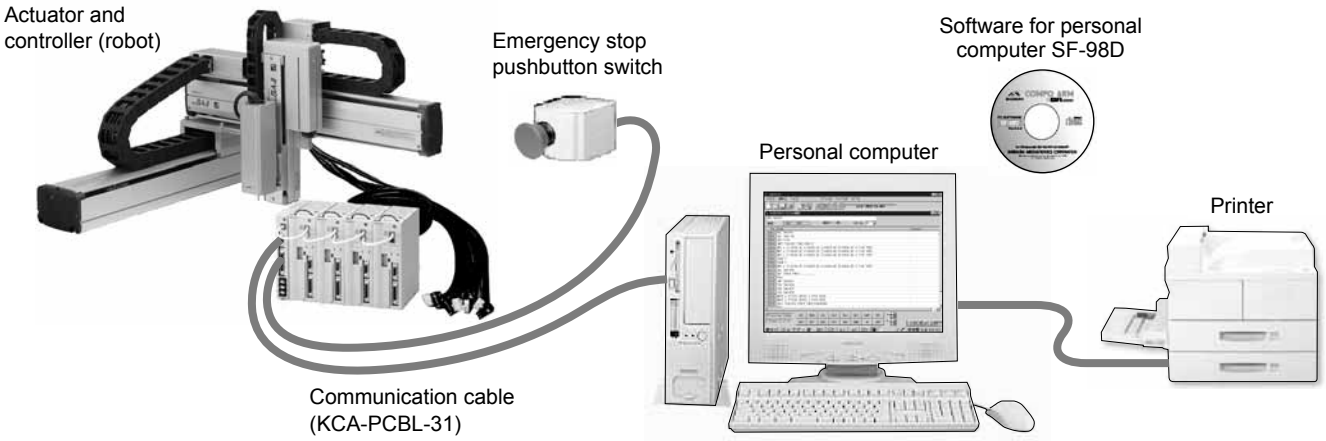

Communication cable (RS232C)

Options

[Application]

This cable connects the controller and personal computer (IBM/PC compatible).
It is used when using the software for personal computer.

[How to order]

KCA - PCBL - 31

[Dimensions]

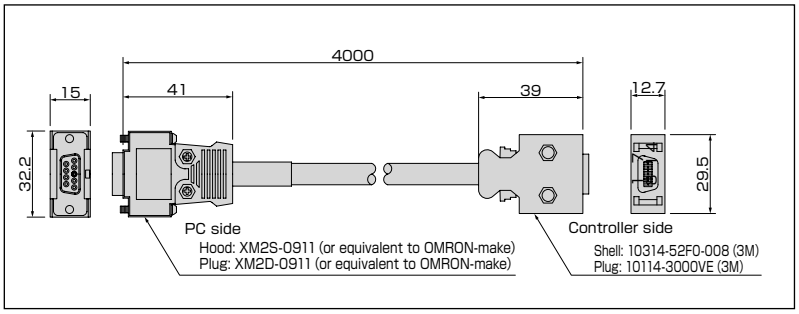

Discontinue

Lithium Battery for Encoder Backup

[Application]

Mounted on the controller as a backup battery for an absolute encoder.
One each of this battery is attached to master unit KCA-20-M10/KCA-20-M40 and slave unit KCA-20-S10/KCA-20-S40 as standard.
Use this battery for the replacement or spare purpose.

[How to order]

KCA - 20 - EB - 05

[Dimensions]

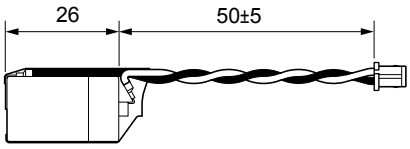

[Applicable controller]

KCA-20-M10, KCA-20-M40, KCA-20-S10, KCA-20-S40

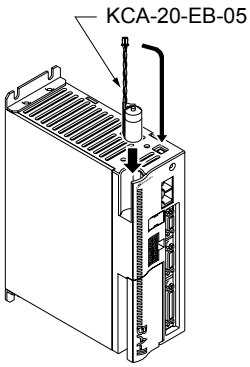

[Specifications]

Item			Description
Specification	Nominal voltage, Ampere-hour		3.6 V, 1000 mAh
	Outer dimensions	Battery body	ø14.5 × 26 mm (excluding projection)
		Harness length	50±5 mm (excluding connectors)
	Weight		Approx. 10 g
Backup duration (Note 1)			Approx. 50,000 hours (Note 2)

Note 1: Total time when the controller power is turned off.
Note 2: Duration of battery varies with the ambient temperature, etc. The figure only provides a yardstick.

Discontinue

Discontinue

Technical Notes

Service Life of Guide

Max. load capacity and allowable load moment given in this manual are the values calculated based on the following service life of guide.
They are commonly used for both ball-screw driven and timing-belt driven axes of each axis type.
(Note: This valve is calculated one and has no guarantee.)

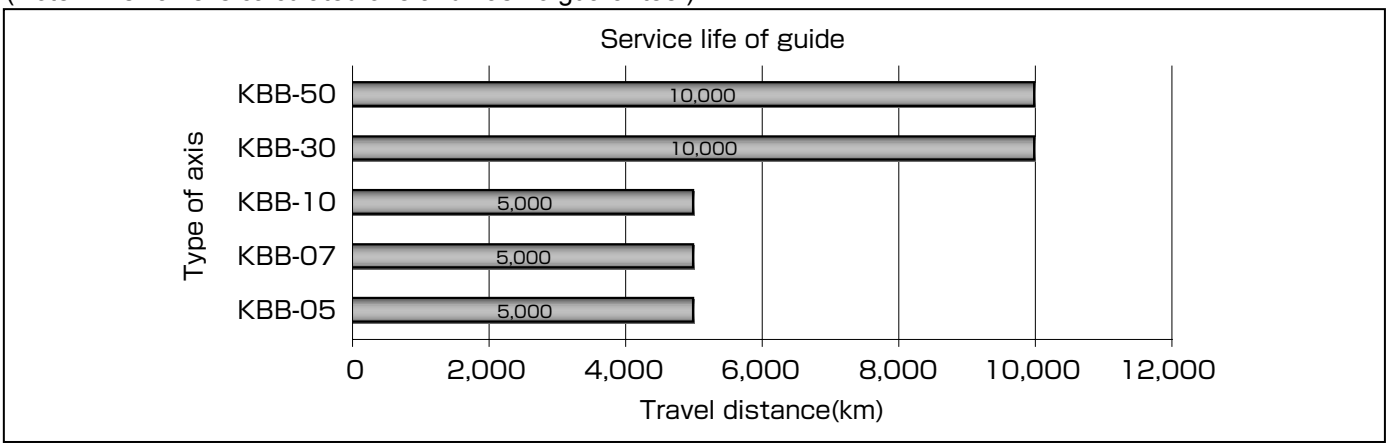

Allowable Load Moment

As the moment caused by a load imposed on the actuator largely affects the slider bearing unit, the following matters should be considered at use.

◆A load exceeding the max. load capacity should not be exerted.
This value can be determined based on the servo motor capacity and differs with the acceleration/deceleration time.

◆The moment should not exceed the allowable static load moment.
This is the moment caused during stop. For the inserting work by using a cylinder attached to the slider, reaction force should be considered.
Impact load MUST NOT be exerted.

◆The moment should not exceed the allowable dynamic load moment.
This is the moment caused by acceleration or deceleration.
The value varies with the load, arm length, direction, etc. Refer to the value given in the table below as a yardstick.

Both allowable static load moment and allowable dynamic load moment are described below. For the max. load capacity, see the specifications of each actuator.

1. Allowable Static Load Moment

MR: Rolling moment
MP: Pitching moment
MY: Yawing moment

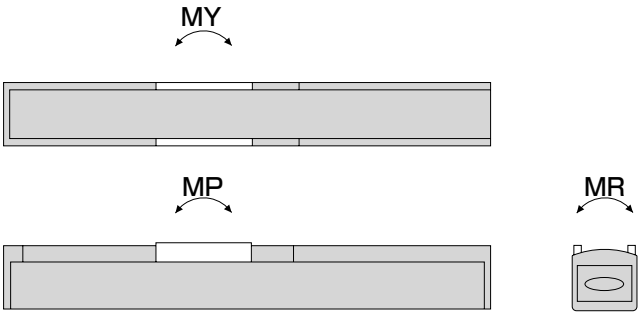

Allowable static load moment N·m	M R					M P					M Y				
Type of axis	KBB-05	KBB-07	KBB-10	KBB-30	KBB-50	KBB-05	KBB-07	KBB-10	KBB-30	KBB-50	KBB-05	KBB-07	KBB-10	KBB-30	KBB-50
Short slider (S)	-	-	49	-	-	-	-	14	-	-	-	-	13	-	-
Medium slider (M)	16	32.2	59	510	2080	6.5	8.2	59	430	2160	6	9.9	54	370	1820
Long slider (L)	-	-	-	510	2080	-	-		750	3150	-	-	-	650	2640

2. Allowable Dynamic Load Moment

Dynamic load moment of an actuator largely influences its life and performance. Allowable dynamic load moment should be calculated, considering the acceleration/deceleration time, (acceleration), load, arm length, direction, speed, stroke, etc., based on the allowable moment of bearing.
Given in the following pages are the tables of allowable dynamic load moment tabulating the load and allowable arm length so that the allowable dynamic load moment can be obtained easily.
Load weight (W kg) and arm length up to the center of gravity of the load (L mm) are shown in each table. (They are not the values of allowable load moment.)

[Table of allowable dynamic load moment] KBB-05, KBB-07

Load weight (Wkg) and arm length up to the center of gravity of the load (Lmm) are shown in each table. (They are not the values of allow able load moment.)

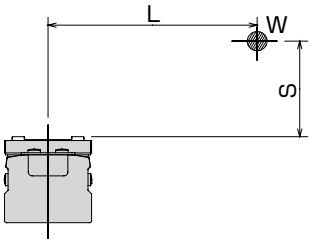

[Mounted horizontally]

KBB-05	Lead 12												Lead 6								
W [kg]	0.5	1	1.5	2	2.5	3	3.5	4	4.5	5	5.5	6	7	8	9	10	11	12	13	14	15
L [mm]	996	495	328	244	194	160	136	119	103	92	82	74	62	53	45	39	34	30	26	22	19

KBB-07	Lead 12												Lead 6								
W [kg]	1	2	3	4	5	6	7	8	9	10	11	12	14	16	18	20	22	24	26	28	30
L [mm]	1638	819	546	410	327	273	233	204	181	162	147	135	115	100	88	78	68	60	53	47	42

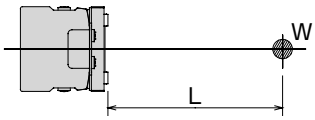

[Mounted horizontally] Wall-mounted

KBB-05	Lead 12												Lead 6								
W [kg]	0.5	1	1.5	2	2.5	3	3.5	4	4.5	5	5.5	6	7	8	9	10	11	12	13	14	15
L [mm]	1062	529	324	233	178	141	114	95	79	67	57	48	35	25	17	11	6	2	-	-	-

KBB-07	Lead 12												Lead 6								
W [kg]	1	2	3	4	5	6	7	8	9	10	11	12	14	16	18	20	22	24	26	28	30
L [mm]	1755	852	551	400	310	250	206	174	149	129	112	99	77	61	48	38	29	22	16	11	7

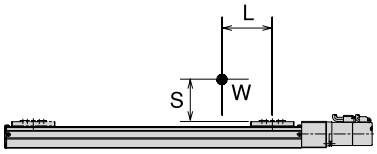

[Mounted horizontally]

KBB-05	Lead 12												Lead 6								
W [kg]	0.5	1	1.5	2	2.5	3	3.5	4	4.5	5	5.5	6	7	8	9	10	11	12	13	14	15
L [mm]	508	255	171	129	103	86	74	65	57	52	47	43	36	31	27	24	21	18	16	13	12

KBB-07	Lead 12												Lead 6								
W [kg]	1	2	3	4	5	6	7	8	9	10	11	12	14	16	18	20	22	24	26	28	30
L [mm]	839	423	283	214	173	145	125	110	98	89	81	74	64	57	49	43	38	34	30	27	24

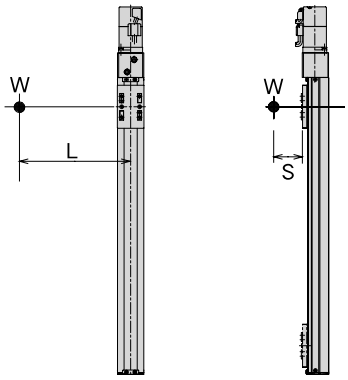

[Mounted vertically]

KBB-05	Lead 12						Lead 6	
W [kg]	0.5	1	1.5	2	2.5	3	3.5	4
L [mm]	365	160	92	58	37	23	14	6

KBB-07	Lead 12				Lead 6			
W [kg]	1	2	3	4	5	6	7	8
L [mm]	632	293	181	124	90	68	52	40

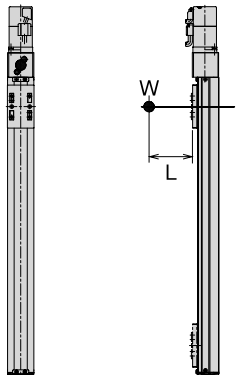

[Mounted vertically]

KBB-05	Lead 12						Lead 6	
W [kg]	0.5	1	1.5	2	2.5	3	3.5	4
L [mm]	460	219	138	98	74	58	47	38

KBB-07	Lead 12				Lead 6			
W [kg]	1	2	3	4	5	6	7	8
L [mm]	775	376	243	177	181	110	91	77

Discontinue

[Table of allowable dynamic load moment] KBB-10, KBB-30, KBB-50

Load type I [Mounted horizontally]

When S = 50 mm:
Arm length up to the center of gravity of load: L (mm)

Drive system	Actuator	Speed (mm/s)	Lead (mm)	Slider	Load: W															
					5Kg	10Kg	15Kg	20Kg	25Kg	30Kg	35Kg	40Kg	45Kg	50Kg	55Kg	60Kg	65Kg	70Kg	75Kg	80Kg
Ball screw	KBB-10E	1200	20	S	375	175	105	–	–	–	–	–	–	–	–	–	–	–	–	–
				M	700	355	240	–	–	–	–	–	–	–	–	–	–	–	–	–
		600	10	S	560	270	180	135	110	90	–	–	–	–	–	–	–	–	–	–
				M	810	395	270	205	167	140	–	–	–	–	–	–	–	–	–	–
		300	5	S	615	320	210	160	140	110	97	85	77	70	–	–	–	–	–	–
				M	820	405	275	210	172	145	120	100	87	75	–	–	–	–	–	–
	KBB-30E	1200	20	M	1182	590	410	315	–	–	–	–	–	–	–	–	–	–	–	–
				L	1342	670	467	360	–	–	–	–	–	–	–	–	–	–	–	–
		600 (300)	10 (5)	M	1480	740	515	400	330	285	252	215	185	160	–	–	–	–	–	–
				L	1542	775	537	415	347	300	262	225	192	165	–	–	–	–	–	–
	KBB-30F	1200	20	M	1135	590	410	315	260	225	200	165	–	–	–	–	–	–	–	–
				L	1290	670	465	360	300	260	230	195	–	–	–	–	–	–	–	–
		600 (300)	10 (5)	M	1425	740	515	400	330	285	525	215	185	160	140	120	110	95	85	75
				L	1485	775	535	415	345	300	265	225	190	165	145	125	110	100	90	80
	KBB-50F	1200	20	M	5320	2620	1720	1270	1000	820	690	595	520	460	410	370	–	–	–	–
				L	5545	2730	1795	1325	1040	855	720	620	540	480	430	385	–	–	–	–
		600 (300)	10 (5)	M	5875	2895	1900	1405	1105	905	765	655	575	510	455	410	370	335	310	285
				L	5945	2925	1920	1420	1115	815	770	665	580	515	460	415	375	340	315	290
	KBB-50G	1200	20	M	5320	2620	1720	1270	1000	820	690	595	520	460	410	370	335	305	280	255
				L	5545	2730	1795	1325	1040	855	720	620	540	480	430	385	350	320	290	265
		600 (300)	10 (5)	M	5875	2895	1900	1405	1105	905	765	655	575	510	455	410	370	335	310	285
				L	5945	2925	1920	1420	1115	815	770	665	580	515	460	415	375	340	315	290

* The speed is applicable when axis stroke is 600 mm or less (acceleration/deceleration time: 0.36 sec).

(mm)

Drive system	Actuator	Speed (mm/s)	Lead (mm)	Slider	Load: W								
					85Kg	90Kg	95Kg	100Kg	110Kg	120Kg	130Kg	140Kg	150Kg
Ball screw	KBB-50F	600 (300)	10 (5)	M	260	245	225	210	–	–	–	–	–
				L	270	245	230	210	–	–	–	–	–
	KBB-50G	1200	20	M	235	215	200	185	–	–	–	–	–
				L	245	230	210	195	–	–	–	–	–
		600 (300)	10 (5)	M	260	245	225	210	180	160	140	125	110
				L	270	245	230	210	185	160	140	125	110

* The speed is applicable when axis stroke is 600 mm or less (acceleration/deceleration time: 0.36 sec).

Arm length up to the center of gravity of load: L (mm)

Drive system	Actuator	Speed (mm/s)	Lead (mm)	Slider	Load: W							
					5Kg	10Kg	15Kg	20Kg	25Kg	30Kg	35Kg	40Kg
Timing belt	KBB-10E	1000	21	S	375	175	105	–	–	–	–	–
				M	700	355	240	–	–	–	–	–
	KBB-10F	1000	21	S	375	175	105	70	–	–	–	–
				M	700	355	240	180	–	–	–	–
		2000	42	S	112	52	–	–	–	–	–	–
				M	210	106	–	–	–	–	–	–
	KBB-30E	1000	21	M	1182	590	410	–	–	–	–	–
				L	1342	670	467	–	–	–	–	–
	KBB-30F	1000	21	M	1135	590	410	315	260	225	200	165
				L	1290	670	465	360	300	260	230	195
		2000	42	M	454	236	164	126	–	–	–	–
				L	516	268	186	144	–	–	–	–
	KBB-50F	1000	21	M	5320	2620	1720	1270	1000	850	690	595
				L	5545	2730	1795	1325	1040	855	720	620
	KBB-50G	2000	42	M	2128	1048	688	508	–	–	–	–
				L	2218	1092	718	530	–	–	–	–

* The speed is applicable when the lead is 21 mm and acceleration/deceleration time is 0.3 sec, and when the lead is 42 mm and acceleration/deceleration time is 0.5 sec.

Discontinue

[Table of allowable dynamic load moment] KBB-10, KBB-30, KBB-50

When S = 200 mm:
Arm length up to the center of gravity of load: L (mm)

Drive system	Actuator	Speed (mm/s)	Lead (mm)	Slider	Load: W															
					5Kg	10Kg	15Kg	20Kg	25Kg	30Kg	35Kg	40Kg	45Kg	50Kg	55Kg	60Kg	65Kg	70Kg	75Kg	80Kg
Ball screw	KBB-10E	1200	20	S	310	105	–	–	–	–	–	–	–	–	–	–	–	–	–	–
				M	690	340	220		–	–	–	–	–	–	–	–	–	–	–	–
		600	10	S	537	245	150	105	75	50	–	–	–	–	–	–	–	–	–	–
				M	790	390	265	200	165	135	–	–	–	–	–	–	–	–	–	–
		300	5	S	622	300	200	150	120	100	87	75	67	60	–	–	–	–	–	–
				M	820	405	275	210	172	145	120	100	87	75	–	–	–	–	–	–
	KBB-30E	1200	20	M	1180	585	400	305	–	–	–	–	–	–	–	–	–	–	–	–
				L	1342	670	462	355	–	–	–	–	–	–	–	–	–	–	–	–
		600 (300)	10 (5)	M	1480	740	515	395	330	280	250	215	180	155	–	–	–	–	–	–
				L	1542	770	537	415	345	295	262	225	190	165	–	–	–	–	–	–
	KBB-30F	1200	20	M	1135	585	400	305	225	185	155	130	–	–	–	–	–	–	–	–
				L	1290	670	460	355	295	250	220	190	–	–	–	–	–	–	–	–
		600 (300)	10 (5)	M	1425	740	510	395	330	280	250	215	180	155	135	120	105	90	80	70
				L	1485	770	535	415	345	295	365	225	190	165	145	125	110	100	85	45
	KBB-50F	1200	20	M	5320	2620	1720	1265	995	815	685	590	515	450	400	360	–	–	–	–
				L	5545	2730	1790	1325	1040	855	720	615	540	475	425	380	–	–	–	–
		600 (300)	10 (5)	M	5875	2895	1900	1400	1105	905	765	655	575	505	455	405	370	335	310	285
				L	5945	2925	1920	1420	1115	915	770	665	580	515	460	415	375	340	310	285
	KBB-50G	1200	20	M	5320	2620	1720	1265	995	815	685	590	515	450	400	360	325	295	270	245
				L	5545	2730	1790	1325	1040	855	720	615	540	475	425	380	345	315	285	260
		600 (300)	10 (5)	M	5785	2895	1900	1400	1105	905	765	655	575	505	455	405	370	335	310	285
				L	5945	2925	1920	1420	1115	915	770	665	580	515	460	415	375	340	310	285

* The speed is applicable when axis stroke is 600 mm or less (acceleration/deceleration time: 0.36 sec).

(mm)

Drive system	Actuator	Speed (mm/s)	Lead (mm)	Slider	Load: W								
					85Kg	90Kg	95Kg	100Kg	110Kg	120Kg	130Kg	140Kg	150Kg
Ball screw	KBB-50F	600 (300)	10 (5)	M	260	240	225	210	–	–	–	–	–
				L	265	245	225	210	–	–	–	–	–
	KBB-50G	1200	20	M	225	205	190	175	–	–	–	–	–
				L	240	220	205	190	–	–	–	–	–
		600 (300)	10 (5)	M	260	240	225	210	180	160	140	120	105
				L	265	245	225	210	185	160	140	125	110

* The speed is applicable when axis stroke is 600 mm or less (acceleration/deceleration time: 0.36 sec).

Arm length up to the center of gravity of load: L (mm)

Drive system	Actuator	Speed (mm/s)	Lead (mm)	Slider	Load: W							
					5Kg	10Kg	15Kg	20Kg	25Kg	30Kg	35Kg	40Kg
Timing belt	KBB-10E	1000	21	S	310	105	–	–	–	–	–	–
				M	690	340	220	–	–	–	–	–
	KBB-10F	1000	21	S	310	105	–	–	–	–	–	–
				M	690	340	220	160	–	–	–	–
		2000	42	S	93	31	–	–	–	–	–	–
				M	207	102	66	48	–	–	–	–
	KBB-30E	1000	21	M	1180	585	400	–	–	–	–	–
				L	1342	670	462	–	–	–	–	–
	KBB-30F	1000	21	M	1135	585	400	305	225	185	155	130
				L	1290	670	460	355	295	250	220	190
		2000	42	M	454	454	454	454	–	–	–	–
				L	516	268	184	142	–	–	–	–
	KBB-50F	1000	21	M	5320	2620	1720	1265	995	815	685	590
				L	5545	2730	1790	1325	1040	855	720	615
	KBB-50G	2000	42	M	2128	1048	688	506	–	–	–	–
				L	2218	1092	716	530	–	–	–	–

* The speed is applicable when the lead is 21 mm and acceleration/deceleration time is 0.3 sec, and when the lead is 42 mm and acceleration/deceleration time is 0.5 sec.

Discontinue

[Table of allowable dynamic load moment] KBB-10, KBB-30, KBB-50

Load type II [Mounted horizontally]
Wall-mounted

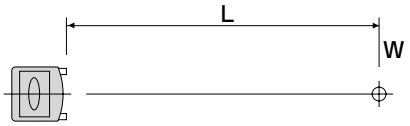

Arm length up to the center of gravity of load: L (mm)

Drive system	Actuator	Speed (mm/s)	Lead (mm)	Slider	Load: W															
					5Kg	10Kg	15Kg	20Kg	25Kg	30Kg	35Kg	40Kg	45Kg	50Kg	55Kg	60Kg	65Kg	70Kg	75Kg	80Kg
Ball screw	KBB-10E	1200	20	S	335	130	60	–	–	–	–	–	–	–	–	–	–	–	–	–
				M	660	290	165	–	–	–	–	–	–	–	–	–	–	–	–	–
		600	10	S	440	165	85	40	12	–	–	–	–	–	–	–	–	–	–	–
				M	715	310	175	110	72	45	–	–	–	–	–	–	–	–	–	–
		300	5	S	467	180	90	45	17	0	–	–	–	–	–	–	–	–	–	–
				M	720	305	175	110	72	45	27	15	3	–	–	–	–	–	–	–
	KBB-30E	1200	20	M	1342	610	388	275	–	–	–	–	–	–	–	–	–	–	–	–
				L	1435	855	413	2990	–	–	–	–	–	–	–	–	–	–	–	–
		600 (300)	10 (5)	M	1467	670	423	300	228	175	140	115	95	80	–	–	–	–	–	–
				L	1482	675	428	300	228	180	143	115	95	80	–	–	–	–	–	–
	KBB-30F	1200	20	M	1285	610	385	275	205	160	130	105	–	–	–	–	–	–	–	–
				L	1375	655	410	290	220	170	135	110	–	–	–	–	–	–	–	–
		600 (300)	10 (5)	M	1405	670	420	300	225	175	140	115	95	80	65	55	45	35	30	20
				L	1420	675	425	300	230	180	140	115	95	80	65	55	45	35	30	25
	KBB-50F	1200	20	M	5690	2815	1855	1375	1085	895	760	655	575	510	460	145	–	–	–	–
				L	5900	2915	1920	1425	1125	930	785	680	595	530	475	430	–	–	–	–
		600 (300)	10 (5)	M	6055	2995	1975	1460	1155	850	805	695	610	545	490	440	405	370	340	315
				L	6085	3010	1985	1470	1165	955	810	700	615	545	490	445	405	370	340	315
	KBB-50G	1200	20	M	5690	2815	1855	1375	1085	895	760	655	575	510	460	415	375	345	320	295
				L	5900	2915	1920	1425	1125	930	785	680	595	530	475	430	390	360	330	305
		600 (300)	10 (5)	M	6055	2995	1975	1460	1155	950	805	695	610	545	490	440	405	370	340	315
				L	6085	3010	1985	1470	1165	955	810	700	615	545	490	445	405	370	340	315

* The speed is applicable when axis stroke is 600 mm or less (acceleration/deceleration time: 0.36 sec).

(mm)

Drive system	Actuator	Speed (mm/s)	Lead (mm)	Slider	Load: W								
					85Kg	90Kg	95Kg	100Kg	110Kg	120Kg	130Kg	140Kg	150Kg
Ball screw	KBB-50F	600 (300)	10 (5)	M	290	272	255	240	–	–	–	–	–
				L	295	275	255	240	–	–	–	–	–
	KBB-50G	1200	20	M	275	255	240	220	–	–	–	–	–
				L	285	265	245	230	–	–	–	–	–
		600 (300)	10 (5)	M	290	270	255	240	210	185	170	150	135
				L	295	275	255	240	210	190	170	150	135

* The speed is applicable when axis stroke is 600 mm or less (acceleration/deceleration time: 0.36 sec).

Arm length up to the center of gravity of load: L (mm)

Drive system	Actuator	Speed (mm/s)	Lead (mm)	Slider	Load: W							
					5Kg	10Kg	15Kg	20Kg	25Kg	30Kg	35Kg	40Kg
Timing belt	KBB-10E	1000	21	S	335	130	60	–	–	–	–	–
				M	660	290	165	–	–	–	–	–
	KBB-10F	1000	21	S	335	130	60	35	–	–	–	–
				M	660	290	165	105	–	–	–	–
		2000	42	S	100	39	–	–	–	–	–	–
				M	198	87	–	–	–	–	–	–
	KBB-30E	1000	21	M	1342	610	388	–	–	–	–	–
				L	1435	655	413	–	–	–	–	–
	KBB-30F	1000	21	M	1285	610	385	275	205	160	130	105
				L	1375	655	410	290	220	170	135	110
		2000	42	M	514	244	154	110	–	–	–	–
				L	550	262	164	116	–	–	–	–
	KBB-50F	1000	21	M	5690	2815	1855	1375	1085	895	760	655
				L	5900	2915	1920	1425	1125	930	785	680
	KBB-50G	2000	42	M	2276	1126	742	550	–	–	–	–
				L	2360	1166	768	570	–	–	–	–

* The speed is applicable when the lead is 21 mm and acceleration/deceleration time is 0.3 sec, and when the lead is 42 mm and acceleration/deceleration time is 0.5 sec.

Discontinue

[Table of allowable dynamic load moment] KBB-10, KBB-30, KBB-50

Load type III [Mounted horizontally]

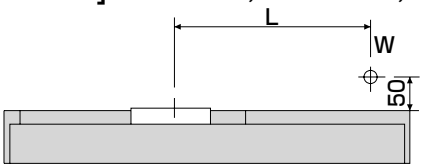

Arm length up to the center of gravity of load: L (mm)

Drive system	Actuator	Speed (mm/s)	Lead (mm)	Slider	Load: W															
					5Kg	10Kg	15Kg	20Kg	25Kg	30Kg	35Kg	40Kg	45Kg	50Kg	55Kg	60Kg	65Kg	70Kg	75Kg	80Kg
Ball screw	KBB-10E	1200	20	S	215	105	70	50	–	–	–	–	–	–	–	–	–	–	–	–
				M	900	415	265	210	–	–	–	–	–	–	–	–	–	–	–	–
		600	10	S	215	105	80	55	47	40	–	–	–	–	–	–	–	–	–	–
				M	837	425	265	195	153	120	–	–	–	–	–	–	–	–	–	–
		300	5	S	240	120	80	65	52	40	35	30	30	25	–	–	–	–	–	–
				M	915	465	295	205	153	120	100	85	72	65	–	–	–	–	–	–
	KBB-30E	1200	20	M	1380	690	480	370	–	–	–	–	–	–	–	–	–	–	–	–
				L	2400	1200	835	650	–	–	–	–	–	–	–	–	–	–	–	–
		600 (300)	10 (5)	M	1290	690	483	375	310	265	235	200	170	150	–	–	–	–	–	–
				L	2400	1205	838	650	540	465	410	350	300	260	–	–	–	–	–	–
	KBB-30F	1200	20	M	1330	690	480	370	305	265	235	200	–	–	–	–	–	–	–	–
				L	2305	1200	835	650	540	465	410	350	–	–	–	–	–	–	–	–
		600 (300)	10 (5)	M	1300	690	480	375	310	265	235	200	170	150	130	115	100	90	80	70
				L	2310	1205	835	650	540	465	415	350	300	260	225	200	175	155	140	125
	KBB-50F	1200	20	M	6380	3140	2060	1520	1200	980	930	710	620	550	490	440	–	–	–	–
				L	9280	4570	3000	2215	1745	1430	1205	1040	905	800	715	645	–	–	–	–
		600 (300)	10 (5)	M	6380	3140	2060	1125	1200	985	830	715	625	550	495	445	400	365	335	310
				L	9280	4570	3000	2215	1745	1430	1205	1040	910	805	720	645	585	535	490	450
	KBB-50G	1200	20	M	6380	3140	2060	1520	1200	980	830	710	620	550	490	440	400	365	335	305
				L	9280	4570	3000	2215	1745	1430	1205	1040	905	800	715	645	585	535	490	450
		600 (300)	10 (5)	M	6380	3140	2060	1125	1200	985	830	715	625	550	495	445	400	365	335	310
				L	9280	4570	3000	2215	1745	1430	1205	1040	910	805	720	645	585	535	490	450

* The speed is applicable when axis stroke is 600 mm or less (acceleration/deceleration time: 0.36 sec).

(mm)

Drive system	Actuator	Speed (mm/s)	Lead (mm)	Slider	Load: W								
					85Kg	90Kg	95Kg	100Kg	110Kg	120Kg	130Kg	140Kg	150Kg
Ball screw	KBB-50F	600 (300)	10 (5)	M	285	265	245	230	–	–	–	–	–
				L	415	385	355	330	–	–	–	–	–
	KBB-50G	1200	20	M	280	260	240	225	–	–	–	–	–
				L	415	385	355	330	–	–	–	–	–
		600 (300)	10 (5)	M	285	265	245	230	200	175	155	135	120
				L	415	385	355	330	290	255	225	200	175

* The speed is applicable when axis stroke is 600 mm or less (acceleration/deceleration time: 0.36 sec).

Arm length up to the center of gravity of load: L (mm)

Drive system	Actuator	Speed (mm/s)	Lead (mm)	Slider	Load: W							
					5Kg	10Kg	15Kg	20Kg	25Kg	30Kg	35Kg	40Kg
Timing belt	KBB-10E	1000	21	S	215	105	70	–	–	–	–	–
				M	900	415	265	–	–	–	–	–
	KBB-10F	1000	21	S	215	105	70	50	–	–	–	–
				M	900	415	265	210	–	–	–	–
		2000	42	S	64	31	–	–	–	–	–	–
				M	270	124	–	–	–	–	–	–
	KBB-30E	1000	21	M	1380	690	480	–	–	–	–	–
				L	2400	1200	835	–	–	–	–	–
	KBB-30F	1000	21	M	1330	690	480	370	305	265	235	200
				L	2305	1200	835	650	540	465	410	350
		2000	42	M	532	276	192	148	–	–	–	–
				L	922	480	334	260	–	–	–	–
	KBB-50F	1000	21	M	6380	3140	2060	1520	1200	980	830	710
				L	9280	4570	3000	2215	1745	1430	1205	1040
	KBB-50G	2000	42	M	2552	1256	824	608	–	–	–	–
				L	3712	1828	1200	886	–	–	–	–

* The speed is applicable when the lead is 21 mm and acceleration/deceleration time is 0.3 sec, and when the lead is 42 mm and acceleration/deceleration time is 0.5 sec.

Discontinue

[Table of allowable dynamic load moment]

KBB-10, KBB-30, KBB-50

Load type IV [Mounted vertically]

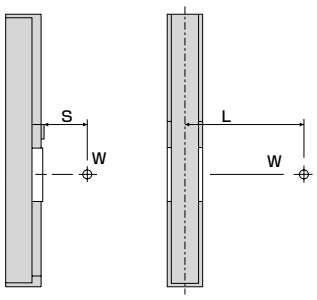

When S = 50 mm:
Arm length up to the center of gravity of load: L (mm)

Drive system	Actuator	Speed (mm/s)	Lead (mm)	Slider	Load: W																	
					3Kg	5Kg	8Kg	10Kg	12Kg	14Kg	16Kg	18Kg	20Kg	22Kg	25Kg	30Kg	35Kg	40Kg	45Kg	50Kg	55Kg	60Kg
Ball screw	KBB-10E	1200	20	S	245	110	–	–	–	–	–	–	–	–	–	–	–	–	–	–	–	–
				M	1270	730	–	–	–	–	–	–	–	–	–	–	–	–	–	–	–	–
		600	10	S	255	115	45	20	5	–	–	–	–	–	–	–	–	–	–	–	–	–
				M	1375	785	460	350	275	–	–	–	–	–	–	–	–	–	–	–	–	–
		300	5	S	290	150	75	45	20	5	–	–	–	–	–	–	–	–	–	–	–	–
				M	1390	795	460	350	275	230	190	160	135	115	–	–	–	–	–	–	–	–
	KBB-30E	1200	20	M	1695	985	–	–	–	–	–	–	–	–	–	–	–	–	–	–	–	–
				L	3000	1770	–	–	–	–	–	–	–	–	–	–	–	–	–	–	–	–
		600	10	M	1815	1060	635	490	395	–	–	–	–	–	–	–	–	–	–	–	–	–
				L	3210	1895	1155	910	745	–	–	–	–	–	–	–	–	–	–	–	–	–
		300	5	M	1835	1070	640	495	400	330	280	240	210	185	–	–	–	–	–	–	–	–
				L	3240	1920	1165	920	755	635	545	475	420	375	–	–	–	–	–	–	–	–
	KBB-30F	1200	20	M	1915	1030	585	455	–	–	–	–	–	–	–	–	–	–	–	–	–	–
				L	3383	1845	1075	845	–	–	–	–	–	–	–	–	–	–	–	–	–	–
		600	10	M	2078	1118	640	495	400	330	280	240	205	–	–	–	–	–	–	–	–	–
				L	3655	1995	1165	920	755	625	540	470	415	–	–	–	–	–	–	–	–	–
		300	5	M	2073	1118	640	495	400	330	280	240	210	185	145	100	72	60	–	–	–	–
				L	3655	1995	1165	920	755	635	545	475	420	375	305	235	193	170	–	–	–	–
	KBB-50F	1200	20	M	9848	5450	3255	2595	2155	–	–	–	–	–	–	–	–	–	–	–	–	–
				L	14343	8037	4750	3795	3155	–	–	–	–	–	–	–	–	–	–	–	–	–
		600	10	M	10528	5830	3480	2775	2305	1970	1720	1520	1365	1240	1085	–	–	–	–	–	–	–
				L	15330	8497	5080	4055	3375	2885	2520	2235	2005	1820	1595	–	–	–	–	–	–	–
		300	5	M	10625	5885	3515	2800	2325	1990	1735	1535	1380	1250	1095	905	770	670	590	525	–	–
				L	10838	3942	5130	4095	3405	2910	2545	2255	2025	1840	1610	1335	1140	990	875	785	–	–
	KBB-50G	1200	20	M	9848	5450	3255	2595	2155	1840	1605	1420	1275	1155	1010	–	–	–	–	–	–	–
				L	14343	8037	4750	3795	3155	2695	2355	2090	1875	1700	1490	–	–	–	–	–	–	–
		600	10	M	10528	5830	3480	2775	2305	1970	1720	1520	1365	1240	1085	895	762	660	582	520	–	–
				L	15330	8497	5080	4055	3375	2885	2520	2235	2005	1820	1595	1325	1127	980	870	775	–	–
		300	5	M	10625	5885	3515	2800	2325	1990	1735	1535	1380	1250	1095	905	770	670	590	525	475	430
				L	10838	3942	5130	4095	3405	2910	2545	2255	2025	1840	1610	1335	1140	990	875	785	710	645

* The speed is applicable when axis stroke is 600 mm or less (acceleration/deceleration time: 0.36 sec).

When S = 200 mm:
Arm length up to the center of gravity of load: L (mm)

Drive system	Actuator	Speed (mm/s)	Lead (mm)	Slider	Load: W																	
					3Kg	5Kg	8Kg	10Kg	12Kg	14Kg	16Kg	18Kg	20Kg	22Kg	25Kg	30Kg	35Kg	40Kg	45Kg	50Kg	55Kg	60Kg
Ball screw	KBB-10E	1200	20	S	95	–	–	–	–	–	–	–	–	–	–	–	–	–	–	–	–	–
				M	1120	575	–	–	–	–	–	–	–	–	–	–	–	–	–	–	–	–
		600	10	S	170	0	–	–	–	–	–	–	–	–	–	–	–	–	–	–	–	–
				M	1255	640	300	205	130	–	–	–	–	–	–	–	–	–	–	–	–	–
		300	5	S	240	75	–	–	–	–	–	–	–	–	–	–	–	–	–	–	–	–
				M	1270	650	300	210	135	80	40	10	–	–	–	–	–	–	–	–	–	–
	KBB-30E	1200	20	M	1565	855	–	–	–	–	–	–	–	–	–	–	–	–	–	–	–	–
				L	2870	1640	–	–	–	–	–	–	–	–	–	–	–	–	–	–	–	–
		600	10	M	1685	930	505	360	265	–	–	–	–	–	–	–	–	–	–	–	–	–
				L	3080	1765	1025	780	615	–	–	–	–	–	–	–	–	–	–	–	–	–
		300	5	M	1705	940	510	365	270	185	140	100	70	45	–	–	–	–	–	–	–	–
				L	3110	1789	1035	790	620	505	415	345	290	230	–	–	–	–	–	–	–	–
	KBB-30F	1200	20	M	1785	900	455	325	–	–	–	–	–	–	–	–	–	–	–	–	–	–
				L	3253	1715	945	715	–	–	–	–	–	–	–	–	–	–	–	–	–	–
		600	10	M	1925	977	505	360	265	185	135	95	65	–	–	–	–	–	–	–	–	–
				L	3488	1845	1025	780	615	495	410	340	285	–	–	–	–	–	–	–	–	–
		300	5	M	1913	987	510	365	265	185	140	100	70	45	7	–	–	–	–	–	–	–
				L	3525	1865	1035	790	620	505	415	35	290	230	175	110	67	30	–	–	–	–
	KBB-50F	1200	20	M	9783	5387	3190	2535	2090	–	–	–	–	–	–	–	–	–	–	–	–	–
				L	14280	7885	4690	3730	3090	–	–	–	–	–	–	–	–	–	–	–	–	–
		600	10	M	10463	5765	3415	2710	2240	1905	1655	1460	1300	1175	1020	–	–	–	–	–	–	–
				L	15220	8432	5015	3990	3310	2820	2455	2170	1940	1755	1535	–	–	–	–	–	–	–
		300	5	M	10560	5820	3450	2735	2265	1925	1670	1475	1315	1185	1030	840	707	605	527	465	–	–
				L	15408	8512	5065	4030	3340	2850	2480	2190	1960	1775	1550	1270	1078	930	815	720	–	–
	KBB-50G	1200	20	M	9783	5387	3190	2535	2090	1775	1540	1360	1210	1090	950	–	–	–	–	–	–	–
				L	14280	7885	4690	3730	3090	2635	2290	2025	1810	1635	1425	–	–	–	–	–	–	–
		600	10	M	10463	5765	3415	2710	2240	1905	1655	1460	1300	1175	1020	835	700	600	522	460	–	–
				L	6085	8432	5015	3990	3310	2820	2455	2170	1940	1755	1535	1260	1065	920	805	715	–	–
		300	5	M	10560	5820	3450	2735	2265	1925	1670	1475	1315	1185	1030	840	707	605	527	465	415	370
				L	15408	8512	5065	4030	3340	2850	2480	2190	1960	1775	1550	1270	1078	930	815	720	645	585

* The speed is applicable when axis stroke is 600 mm or less (acceleration/deceleration time: 0.36 sec).

Discontinue

[Table of allowable dynamic load moment] KBB-10, KBB-30, KBB-50

Load type V [Mounted vertically]

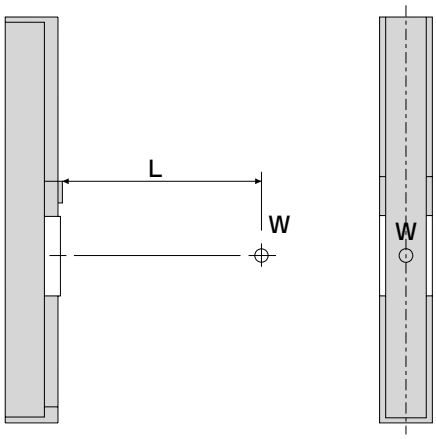

Arm length up to the center of gravity of load: L

(mm)

Drive system	Actuator	Speed (mm/s)	Lead (mm)	Slider	Load: W																
					3Kg	5Kg	8Kg	10Kg	12Kg	14Kg	16Kg	18Kg	20Kg	22Kg	25Kg	30Kg	35Kg	40Kg	45Kg	50Kg	55Kg	60Kg
Ball screw	KBB-10E	1200	20	S	295	160	–	–	–	–	–	–	–	–	–	–	–	–	–	–	–	–
				M	1325	780	–	–	–	–	–	–	–	–	–	–	–	–	–	–	–	–
		600	10	S	355	190	95	70	50	–	–	–	–	–	–	–	–	–	–	–	–	–
				M	1405	830	510	510	400	330	–	–	–	–	–	–	–	–	–	–	–	–
		300	5	S	390	210	110	75	50	40	30	25	20	15	–	–	–	–	–	–	–	–
				M	1420	835	510	400	330	280	240	210	185	165	–	–	–	–	–	–	–	–
	KBB-30E	1200	20	M	1925	1140	–	–	–	–	–	–	–	–	–	–	–	–	–	–	–	–
				L	3370	2005	–	–	–	–	–	–	–	–	–	–	–	–	–	–	–	–
		600	10	M	2060	1220	750	590	485	–	–	–	–	–	–	–	–	–	–	–	–	–
				L	3605	2150	1330	1055	870	–	–	–	–	–	–	–	–	–	–	–	–	–
		300	5	M	2080	1235	755	595	490	415	360	315	280	250	–	–	–	–	–	–	–	–
				L	3640	2170	1340	1070	880	750	650	575	515	465	–	–	–	–	–	–	–	–
	KBB-30F	1200	20	M	2173	1190	700	550	–	–	–	–	–	–	–	–	–	–	–	–	–	–
				L	3798	2092	1240	985	–	–	–	–	–	–	–	–	–	–	–	–	–	–
		600	10	M	2323	1272	750	590	485	410	355	310	275	–	–	–	–	–	–	–	–	–
				L	4198	2375	1330	1055	870	740	645	570	510	–	–	–	–	–	–	–	–	–
		300	5	M	2345	1285	755	595	490	415	360	315	280	250	215	175	145	120	–	–	–	–
				L	4100	2260	1340	1070	880	750	650	575	515	465	402	330	277	235	–	–	–	–
	KBB-50F	1200	20	M	11173	6197	3700	2950	2450	–	–	–	–	–	–	–	–	–	–	–	–	–
				L	16300	9035	5400	4310	3585	–	–	–	–	–	–	–	–	–	–	–	–	–
		600	10	M	11963	6625	3955	3155	2620	2240	1955	1730	1555	1410	1235	–	–	–	–	–	–	–
				L	17423	9657	5775	4610	3835	3280	2865	2540	2280	2070	1815	–	–	–	–	–	–	–
		300	5	M	12075	6732	9559	3185	2645	2260	1975	1750	1570	1420	1245	1030	877	760	670	600	–	–
				L	17588	9750	5830	4655	3870	3310	2890	2565	2305	2090	1835	1520	1297	1130	997	895	–	–
	KBB-50G	1200	20	M	11193	6197	3700	2950	2450	2095	1825	1620	1450	1315	1150	–	–	–	–	–	–	–
				L	16300	9035	5400	4310	3585	3065	2675	2375	2130	1935	1695	–	–	–	–	–	–	–
		600	10	M	11963	6625	3955	3155	2620	2240	1955	1730	1555	1410	1235	1020	867	755	665	595	–	–
				L	17423	9657	5775	4610	3835	3280	2865	2540	2280	2070	1815	1505	1285	1115	987	885	–	–
		300	5	M	12075	6735	3995	3185	2645	2260	1975	1750	1570	1420	1245	1030	877	760	670	600	540	490
				L	17588	9750	5830	4655	3870	3310	2890	2565	2305	2090	1835	1520	1297	1130	997	895	805	735

* The speed is applicable when axis stroke is 600 mm or less (acceleration/deceleration time: 0.36 sec).

Discontinue

Operation Mode

[Sequential mode]

Mode in which a program created, using instruction words, is executed in the order of steps.

Master unit type		KCA-20-M10, KCA-20-M40	KCA-20-M00
No. of program steps		2,000 steps (Note 1)	2,500 steps (Note 1)
Coordinate table		999 points × 4 tasks	999 points × 1 task
Speed setting		10 steps (variable)	10 steps (variable)
Acceleration/deceleration setting		20 steps (variable)	20 steps (variable)
No. of counters		99	99
No. of timers		9	9
Multitask	Max. quantity of tasks	4 tasks	4 tasks (For axis motion, only one task can be used.)
	Max. quantity of controlled axes	4 axes	4 axes
	Max. quantity of controlled axes/task	2 axes	4 axes

Note 1: Total number of steps of 4 tasks. In the easy mode, the maximum number of steps is 1,000.

Example programming in sequential mode

[Motion]
When general-purpose input port 1-3 is ON after the axes reach point B via point A from the origin, they move to point C (good product). When it is OFF, they move to point D (rejected product).

	X	Y
Coordinates of point A	(100,	0)
Coordinates of point B	(200,	200)
Coordinates of point C	(200,	300)
Coordinates of point D	(300,	200)

[Example of using general-purpose input signals]
Signal for good product: Port 1-3 ON
Signal for rejected product: Port 1-3 OFF
For input signal timing: Use of port 1-8

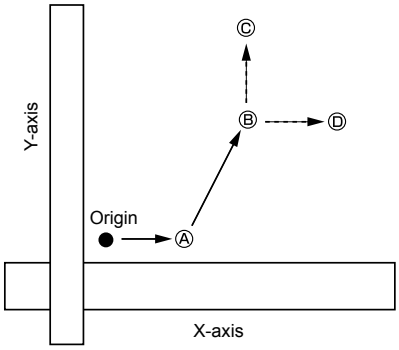

Flow chart

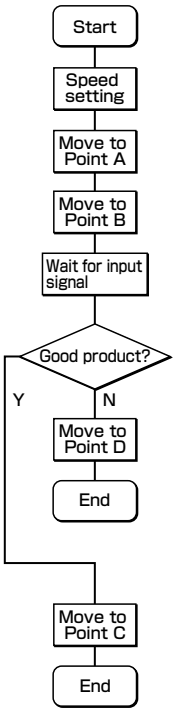

Example program

Step	Command	Data	Comment
0001	SPD	V = 05	
0002	MOV	a S V = 00 X = 100 POST Y = 0	Point Ⓐ
0003	MOV	a S V = 00 X = 200 POST Y = 200	Point Ⓑ
0004	IN	PORT [1] 1 · · · · · · ·	Waiting for input of good or rejected product judgment signal.
0005	JMPI	10 PORT [1] · · · · · 1 · ·	When general-purpose input port 1-3 is ON, jump to tag No. 10.
0006	MOV	a S V = 00 X = 300 POST Y = 200	Point Ⓓ (when rejected product judgment signal has reached)
0007	END		
0008	TAG	10	
0009	MOV	a S V = 00 X = 200 POST Y = 300	Point Ⓒ (when good product judgment signal has reached)
0010	END		

Note: The KCA20-M10 (40) controller uses MOVP command in lieu of MOV command.

[Input timing of general-purpose input signals]
After the good product or rejected product judgment signal (general-purpose input port 1-3) is ON, the timing signal (general-purpose input port 1-8) is input.

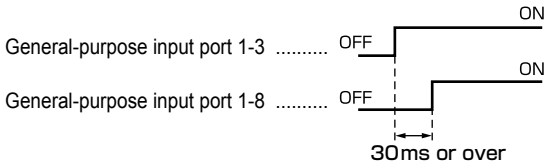

Discontinue

List of commands (instruction words) for sequential mode

Controller: KCA−20−M10, KCA−20−M40
Teach pendant: KCA−TPH−A

Command	Description
Command for axis movement	
MOVP	Execution of move data value in specified coordinate table.
MVB	Return from current position to just preceding teaching position.
MVE	Escape movement
HOME	Home return command
Command for parameter setting	
SPD	Speed setting
ACC	Acceleration/deceleration setting
OFS	Offset setting
Command for I/O port control	
OUT	Output to general-purpose port.
OUTP	Pulse output to general-purpose port.
OUTC	Counter value output to general-purpose port.
IN	Waiting for input.
INPC	Setting of input status of general-purpose port to counter.
Command for timer/counter control	
TIM	Waiting for time.
TIMP	Preset of timer number and time.
CNT	Preset of counter number and count value.
CNT+	Addition of counter value.
CNT–	Subtraction of counter value.
CNTC	Clear of all counters.
Command for program control	
NOP	Non-operation
RET	Return (declaration of ending a subroutine).
STOP	Stop
END	Program end
TAG	Jump to a tag (destination label)
PSEL	Program selection
Command for servo control	
SVON	Servo ON
SVOF	Servo OFF
Command for matrix operation	
MVM	Matrix movement
LOOP	MVM loop
MINI	Initialization of MVM counter.
Command for jump	
JMP	Unconditional jump.
JMPI	Jump with input condition.
JMPC	Jump with counter condition.
JMPT	Jump with timer condition.
BRAC	Jump to a tag of counter value.
Command for subroutine call	
CAL	Unconditional call (unconditional jump to specified subroutine).
CALI	Call with input condition (call of specified subroutine with input condition).
CALC	Call with counter condition.
CALT	Call with timer condition.
Command for task control	
TSTR	Task start
TSTO	Temporary stop of task.
TRSA	Task restart
TCAN	Compulsive finish of task.

Controller: KCA−20−M00
Teach pendant: KCA−TPH−4B

Command	Description
Command for axis movement	
MOV	Axis travel
MOVP	Axis travel (coordinate table indirect)
MVC	Circular interpolation
MVCP	Circular interpolation (coordinate table indirect)
MVB	Move to just preceding position (return to just preceding position).
MVE	Escape movement
RSMV	Axis travel via RS232C.
HOME	Home return command
Command for parameter setting	
SPD	Speed setting
ACC	Acceleration/deceleration setting
OFS	Offset setting
Command for I/O port control	
OUT	Output to general-purpose port.
OUTP	Pulse output to general-purpose port.
OUTC	Counter value output to general-purpose port.
OUTS	Specified coordinate output to general-purpose port.
IOUT	Output to internal port.
CANS	Cancel of specified coordinate output to general-purpose port.
IN	Waiting for input.
INPC	Setting of input status of general-purpose port to counter.
INSP	Waiting for internal port input.
Command for timer/counter control	
CWIT	Waiting for counter.
TIM	Waiting for time.
TIMP	Preset of timer.
CNT	Preset of counter.
CNT+	Addition of counter value.
CNT–	Subtraction of counter value.
CNTC	Clear of all counters.
Command for program control	
NOP	Non-operation
RET	Return (declaration of ending a subroutine).
STOP	Stop
END	Program end
TAG	Jump to a tag (destination label)
PSEL	Program selection
Command for servo control	
SVON	Servo ON
SVOF	Servo OFF
Command for matrix operation	
MVM	Matrix movement
LOOP	MVM loop
MINI	Initialization of MVM counter.
Command for jump	
JMP	Unconditional jump.
JMPI	Jump with input condition.
JMPC	Jump with counter condition.
JMPT	Jump with timer condition.
BRAC	Jump to a tag of counter value.
Command for subroutine call	
CAL	Unconditional call (unconditional jump to specified subroutine).
CALI	Call with input condition (call of specified subroutine with input condition).
CALC	Call with counter condition.
CALT	Call with timer condition.
Command for task control	
TSTR	Task start
TSTO	Temporary stop of task.
TRSA	Task restart
TCAN	Compulsive finish of task.

Discontinue

[External point designation mode]

Mode in which an axis is positioned by a signal output from the sequencer (PLC) or digital switch, without using a command of the controller
Coordinates of a specified point, speed and acceleration/deceleration should be registered beforehand in the table of the controller.

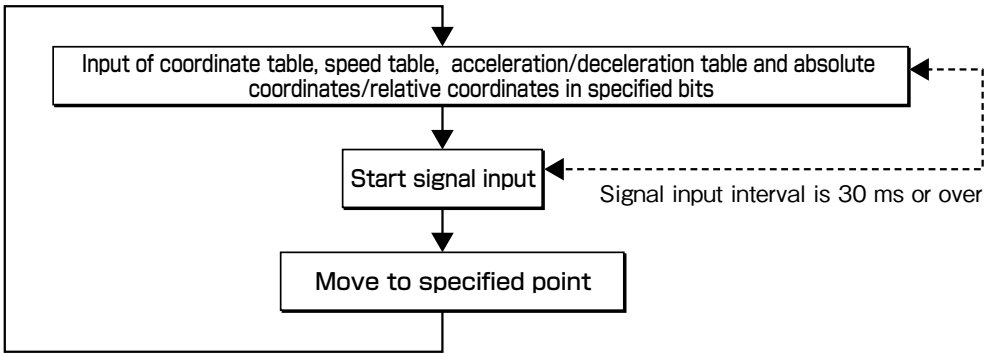

No. of tables that can be used:

Type of master unit: KCA-20-M10, KCA-20-M40

	Without extension I/O unit	With extension I/O unit
Coordinate table	16 points (4 bits) (Note 1)	999 points (10 bits)
Speed table	1 table (1 bit)	3 tables (2 bits)
Acceleration/deceleration table	1 table (1 bit)	2 tables (1 bit)
Coordinate system	Predetermined to absolute coordinate system (Bit designation is not permitted.)	Absolute coordinate system/relative coordinate system (1 bit)

Note 1: Eight (8) points (3 bits) when the pause input is made valid in a single axis control system.

Type of maser unit: KCA-20-M00

Coordinate table	999 points (10 bits)
Speed table	10 tables (4 bits) (Note 2)
Acceleration/deceleration table	20 tables (5 bits)
Coordinate system	Absolute coordinate system/relative coordinate system (1 bit)

Note 2: The number of points and the number of bits that can be used varies with the assigned bit position.

[Palletizing mode]

Mode in which operations of traveling and loading to pallets can be programmed easily only by specifying the number of workpieces, coordinates of locations, etc., without creating a program by combining instruction words.
A total of three patterns are provided.

M to 1
Move from pallet to a specified point.

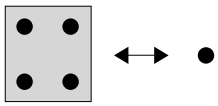

1 to M
Move from a specified point to pallet.

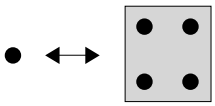

M to M
Move from pallet to pallet.

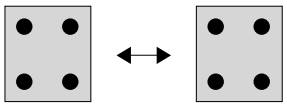

[Pulse train input mode]

Mode in which an axis is moved by means of a pulse generator. This mode is available only for the KCA-20-M10 and KCA-20-M40.

Input pulse		[CW pulse + CCW pulse] (2-clock pulse system) or [Pulse + "+/–" sign] (1-clock system)
Max. input pulse frequency		500 kHz (line driver), 200 kHz (open collector)
Input	Signal	Servo ON, reset, counter clear
	Specification	24VDC, 10 mA
Output	Signal	Positioning finish, error, home position LS, Z-phase signals
	Specification	24VDC, 20 mA (max.)
Applicable encoder		Line driver output (wire-saving type)
Display		Error LED indication (on front of unit) and display on teach pendant.
Protective function		Encoder error, overload, overvoltage, overflow, overcurrent
Power supply voltage, ambient conditions		Pursuant to the master unit specifications.

* See Page 228 for I/O connections.

Discontinue

Details of Input and Output, and Example Connection

Master unit: KCA-20-M10, KCA-20-M40

[Details of system input and output] * For the table of I/O pin numbers, see Page 193.

[System input]

Pin No.	Signal name	◇Sequential mode ◇Palletizing mode	◇External point designation mode	Remarks
28	Home return	ON: Start of home position return motion	Same as left.	ON
29	Start	ON: Restart from currently stopped step or from temporary halt status.	ON: Start of axis feed as per currently specified table information.	Detection of rising edge. ON ON
30	Stop	ON: Stop after current step has been executed.	Invalid	When this input is ON, home return and start input are inoperative.
31	Reset	ON: Reset of error condition. (Effective while program execution is stopped.)	ON: Reset of error condition.	

Home return input is also possible from the general-purpose input port by mode setting of the controller.

[System output]

Pin No.	Signal name	◇Sequential mode ◇Palletizing mode	◇External point designation mode	Remarks
11	Running	ON during controller running and home return motion.	ON during robot operation.	
12	Error	ON at error generation.	Same as left.	
13	Positioning finish	ON when the robot has been positioned at a predetermined position. OFF while the robot is moving. (OFF while the robot is paused.)	Same as left.	
14	Home return finish	ON when home return is unnecessary at execution of move command. OFF when home return is necessary.	ON when home return is unnecessary at execution of move command. OFF when home return is necessary.	
15	Home position LS	Output of home position limit switch status of axis.	Same as left.	
16	Z-phase	Output of Z-phase signal which is output from axis motor encoder.	Same as left.	

[Input and output that can be assigned to general-purpose I/O port]

(Applicable to master unit, slave unit and extension I/O unit.)
* The setting function varies with the system setting operation of controller.

Signal name	* Setting function Input/output	◇Sequential mode ◇Palletizing mode	◇External point designation mode
Robot single operation	Input	The single operation mode is operative when this input is ON with the start input or start key set ON. In this mode, axis feed command and output command are inhibited.	Inoperative.
Restart	Input	Even if the power is turned off or reset while this input is ON, contents of counter, etc., are not cleared.	Inoperative.
Escape	Input	When this input is ON during execution of MVE command, an axis slows down and stops, and the system interprets that the relevant step has finished.	Inoperative.
Pause (feed hold)	Input	ON: Feed hold (slowdown and stop). To restart, set ON the start input. To cancel, set ON the reset input.	
Program selection 2^0 Program selection 2^1 Program selection 2^2	Input	Input signal for specifying a program number (No.1 - No.8) at program selection.	Inoperative.
Home return	Input	ON: Start of home return motion. (Initial setting is assigned to Pin 28.)	
Palletizing	Input	ON: Palletizing mode OFF: Sequential mode (While the easy, external point designation or pulse train input mode is selected, this input is invalid.)	Inoperative.
Wait for input	Output	ON when the system is waiting for an input during program execution.	Inoperative.
Pausing	Output	ON when an axis has slowed down and stopped after recognizing pause input. (OFF when the pause mode is canceled.)	
Ready	Output	ON when the teach pendant and RS232C are inoperative and no error is generated.	

Discontinue

Master unit: KCA-20-M10, KCA-20-M40
[Example connection of input and output]

* For the table of I/O pin numbers, see Page 193.

[System input]

System input internal circuit

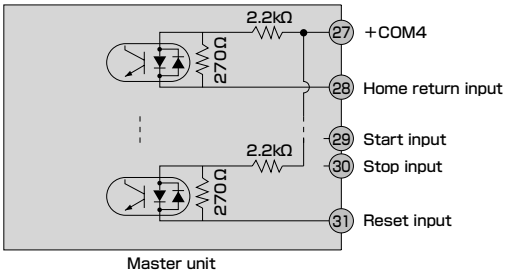

Example connection of external device

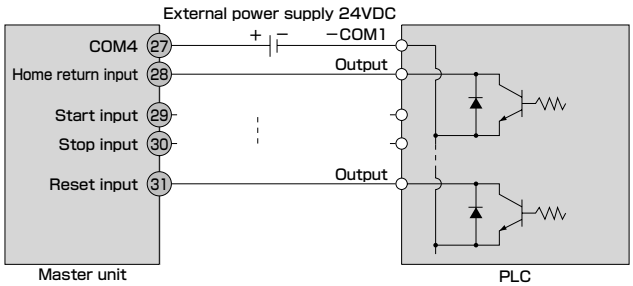

[System output]

System output internal circuit

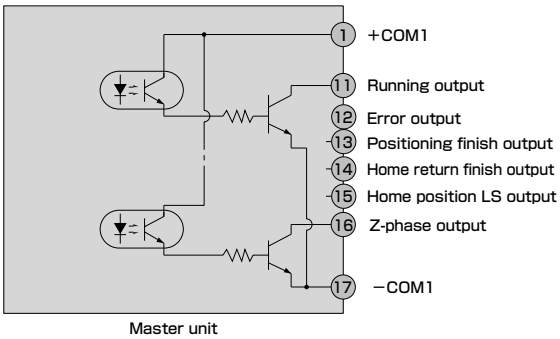

Example connection of external device

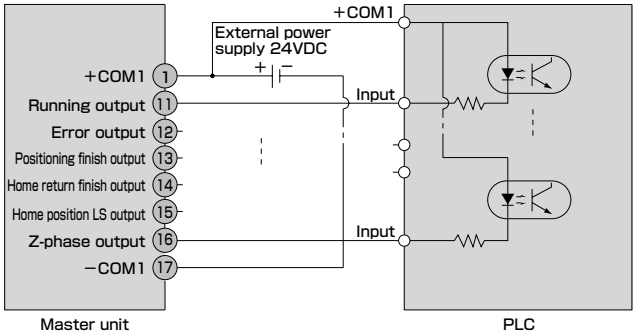

[Emergency stop input]

Emergency stop input internal circuit

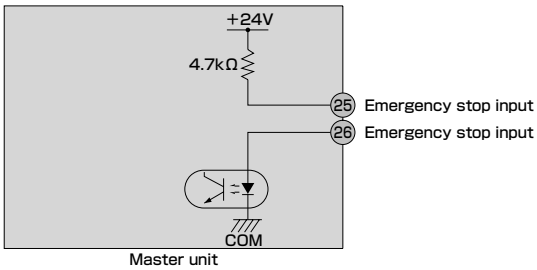

Example connection of external device

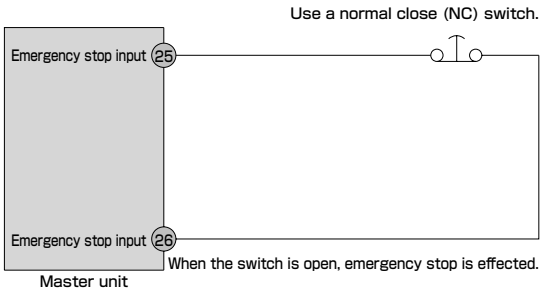

[Emergency stop output]

Emergency stop output internal circuit

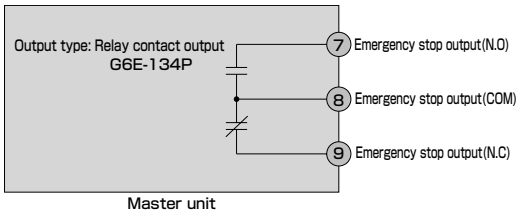

Output type: Relay contact output

	N.O	N.C
At emergency stop	Closed	Open
At normal operation	Open	Closed
At power OFF	Open	Closed

Emergency stop output is activated only when emergency stop is input. It is not activated at generation of other errors.

Master unit: KCA-20-M10, KCA-20-M40
[Example connection of input and output]

For the table of I/O pin numbers, see Page 193.

[General-purpose input]

General-purpose input internal circuit

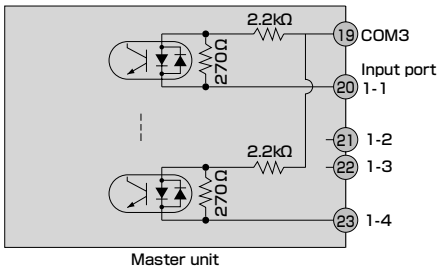

Example connection of external sensor

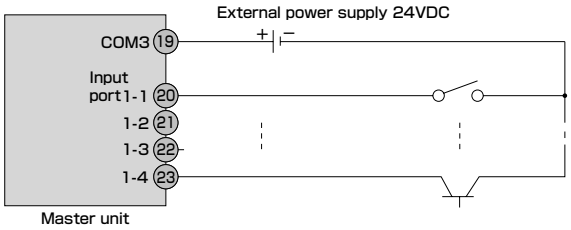

Example connection of sequencer (i.e., PLC)

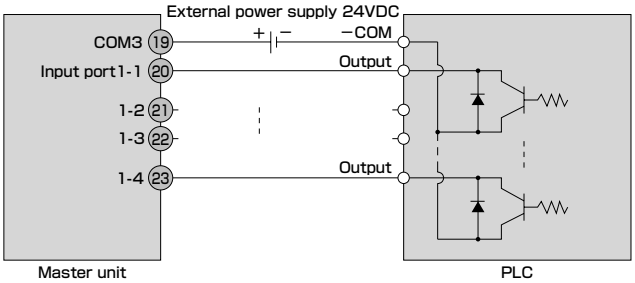

[General-purpose output]

General-purpose output internal circuit

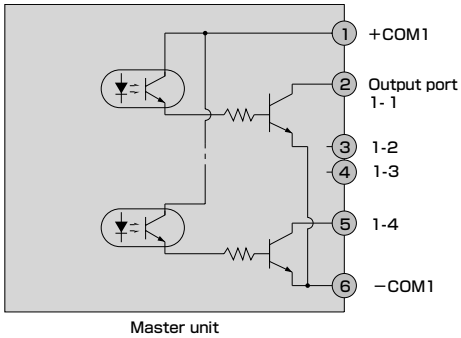

Example connection of external device

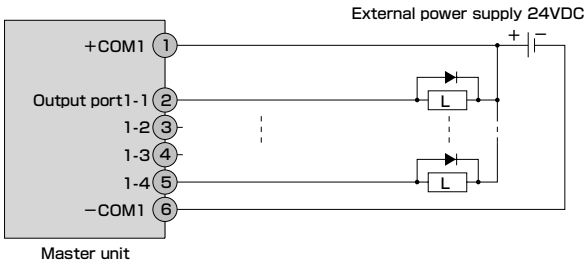

Example connection of sequencer (i.e., PLC)

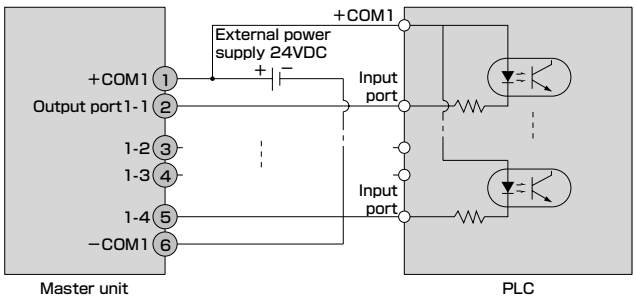

Discontinue

Master unit: KCA-20-M10, KCA-20-M40
[Input and output of pulse train input mode]

* For the table of I/O pin numbers, see Page 193.

[System input] (when master unit (KCA-20-M10, M40) is set to pulse train input mode)

Pin No.	Input/output	Signal name	Description
12	Output	Error	ON when an error has occurred in the controller.
13	Output	Positioning finish	ON when the difference between the total value of command pulses (i.e., pulses from external controller) and the total value of feedback pulses (i.e., axis motor encoder pulses) becomes smaller than the in-position length set in the parameter. (OFF when the servo is OFF.)
15	Output	Home position LS	Output of home position limit switch status of axis.
16	Output	Z-phase	Output of one Z-phase signal from axis motor encoder per motor revolution.
29	Input	Servo ON	Control of energized or de-energized state of axis servo motor. ON: Servo ON (servo lock) OFF: Servo OFF (servo free) This is the servo-free state controlled by software, different from the servo-free state controlled by hardware as in emergency stop.
30	Input	Counter clear	ON: Clears the software counter in the controller, which accumulates command pulses.
31	Input	Reset	ON: Resets errors generated in the controller.
33 34 35 36	Input	+ CLK/±CLK – CLK/SIGN	Command pulses can be input from the teach pendant in either of the two methods; 2-clock method and 1-clock method.

[Input]

Input (counter clear, servo on, reset) internal circuit

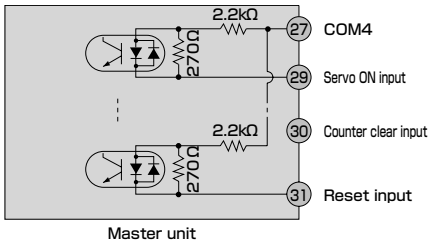

Example connection of external device

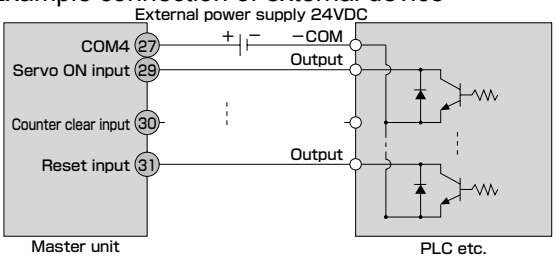

[Output]

Output (error, positioning finish, home position LS and Z-phase) internal circuit

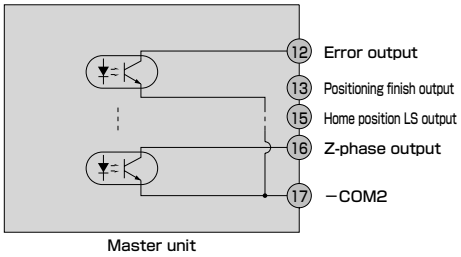

Example connection of external device

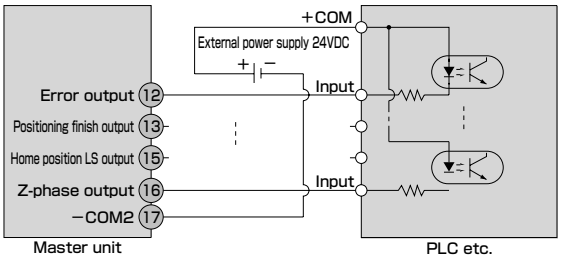

[Pulse train input]

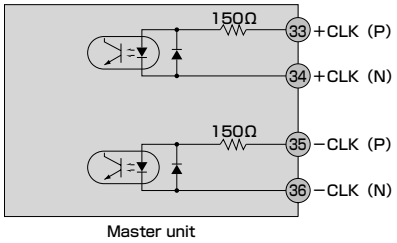

Example connection of line driver system

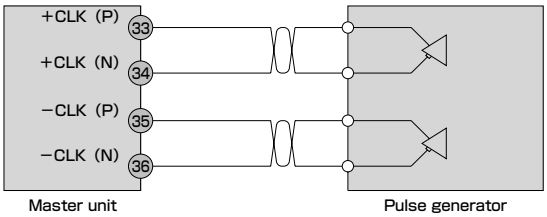

Example connection of open collector system

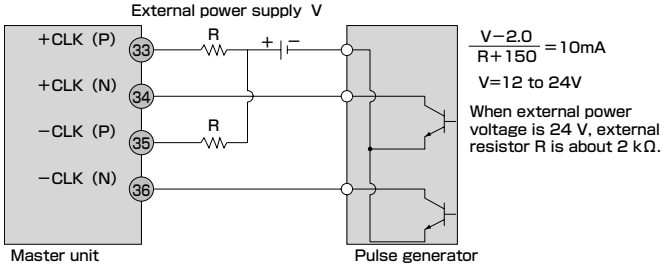

The pulse train input comes in the two systems; line driver system and open collector system. To improve reliability such as noise resistance, however, use of the line driver system is recommended.

Discontinue

High-performance master unit: KCA-20-M00
[Details of system input and output] * For the table of I/O pin numbers, see Page 199.

[System input]

Pin No.	* Setting function / Signal name	◇Sequential mode ◇Palletizing mode	◇External point designation mode	Remarks
21	Home return	ON: Start of home position return motion	Same as left.	ON
22	Start	ON: Restart from currently stopped step or from hold feed status.	ON: Start of axis feed as per currently specified table information.	Detection of rising edge. ON ON
23	Stop	ON: Stop after current step has been executed.	Invalid	When this input is ON, home return and start input are inoperative.
24	Reset	ON: Reset of error condition. (Effective while program execution is stopped.)	ON: Reset of error condition.	

[System output]

Pin No.	* Setting function / Signal name	◇Sequential mode ◇Palletizing mode	◇External point designation mode	Remarks
17	Running	ON during controller running and home return motion.	ON during robot operation.	
18	Error	ON at error generation.	Same as left.	
19	Positioning finish	ON when the robot has been positioned at a predetermined position. OFF while the robot is moving. (OFF while the robot is paused.)	Same as left.	
20	Home return finish	ON when home return is unnecessary at execution of move command. OFF when home return is necessary.	ON when home return is unnecessary at execution of move command.OFF when home return is necessary.	

[Input and output that can be assigned to general-purpose I/O port]

(Applicable to high-performance master unit, slave unit and extension I/O unit.)

* The setting function varies with the system setting operation of controller.

Signal name	* Setting function / Input/output	◇Sequential mode ◇Palletizing mode	◇External point designation mode
Robot single operation	Input	The single operation mode is operative when this input is ON with the start input or start key set ON. In this mode, axis feed command and output command are inhibited.	Inoperative.
Restart	Input	Even if the power is turned off or reset while this input is ON, contents of counter, etc., are not cleared.	Inoperative.
Escape	Input	When this input is ON during execution of MVE command, an axis slows down and stops, and the system interprets that the relevant step has finished.	Inoperative.
Pause (feed hold)	Input	ON: Feed hold (slowdown and stop). To restart, set ON the start input. To cancel, set ON the reset input.	
Program selection 2^0 Program selection 2^1 Program selection 2^2 Program selection 2^3	Input	Input signal for specifying a program number (No.1 - No.16) at program selection.	Inoperative.
Palletizing	Input	ON: Palletizing mode OFF: Sequential mode (While the easy, external point designation or pulse train input mode is selected, this input is invalid.)	Inoperative.
Wait for input	Output	ON when the system is waiting for an input during program execution.	Inoperative.
Pausing	Output	ON when an axis has slowed down and stopped after recognizing pause input. (OFF when the pause mode is canceled.)	
Ready	Output	ON when the teach pendant and RS232C are inoperative and no error is generated.	

Discontinue

High-performance master unit: KCA-20-M00
[Example connection of input and output]

* For the table of I/O pin numbers, see Page 196.

[System and general-purpose input/output]

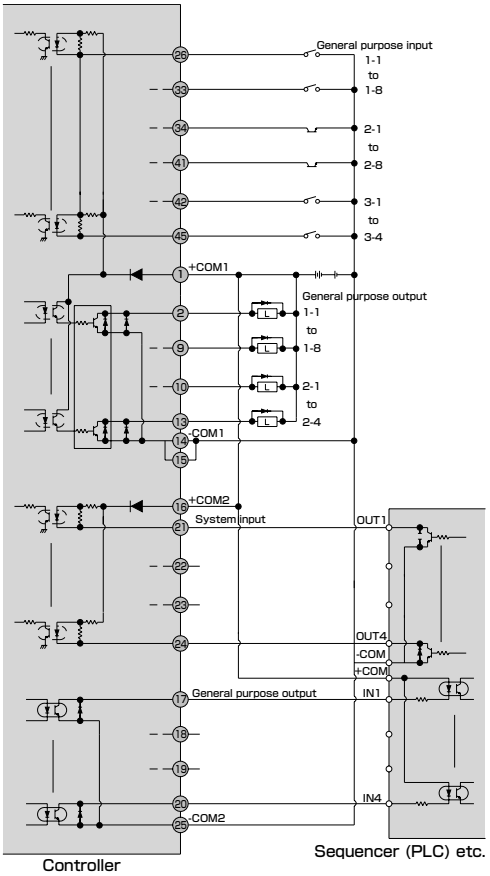

[Emergency stop input]

Emergency stop input internal circuit

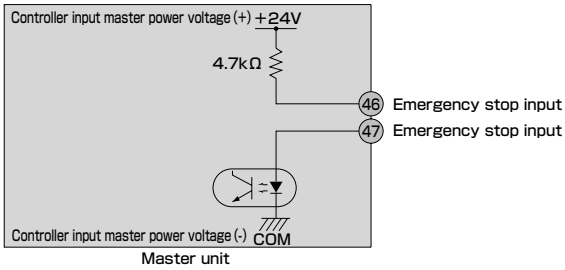

(Note) Input power supply of controller is used.

Example connection of external device

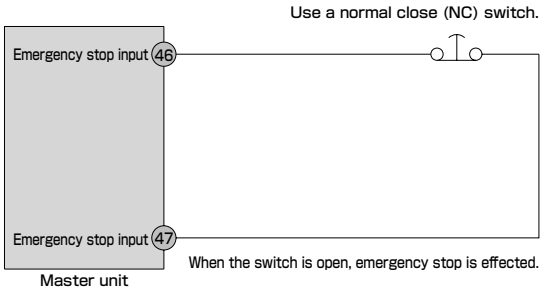

[Emergency stop output]

Emergency stop output internal circuit

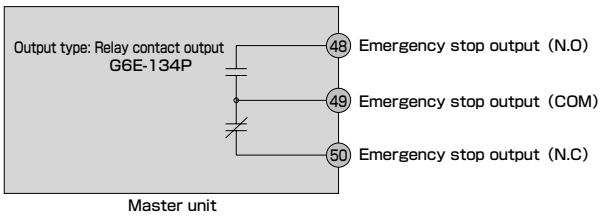

Output type: Relay contact output

	N.O	N.C
At emergency stop	Closed	Open
At normal operation	Open	Closed
At power OFF	Open	Closed

Emergency stop output is activated only when emergency stop is input. It is not activated at generation of other errors.

Discontinue

High-performance master unit: (designed for CC-Link) KCA-20-M00

[System Input/Output] * For the I/O signal list, see page 201.

(1) [System Input] (CC-Link master station → KCA-20-M00 / M01)

Signal name	Remote output	Normal mode	External point specifying mode	Remarks
Home return (*1)	RYn0	ON: Home return operation start	Home return	Rising edge detection
Start (*1)	RYn1	ON: Restart from currently-stopped step and paused state	ON: Movement is started based on the information of the currently-specified table	ON ON
Stop (*1)	RYn2	ON: Current step is stopped after is completed	Disabled	Home return and start input are disabled when this input is ON.
Reset (*1)	RYn3	ON: Clearing of error state (enabled while program execution is stopped)	ON: Clearing of error state	
Jog input	RY(n+4)8 to RY(n+4)F	Three types of operation modes (inching, low-speed movement, high-speed movement) and the movement direction are specified, and jog movement is performed for the selected axis.		

Note 1: Home return, start, stop, and reset are used based on the parameter settings.

(2) [System Output] (KCA-20-M00 / M01 → CC-Link master station)

Signal name	Remote input	Sequential mode Palletizing mode	External point specifying mode
During operation	RXn0	ON during controller execution and during home return operation	ON during robot operation
Error	RXn1	ON when error occurs	Same as left
Positioning complete	RXn2	ON when robot completes positioning OFF when movement of the robot is in progress (remains at OFF when stopped by pause)	Same as left
Home return complete	RXn3	ON when the home return and HOME command execution are completed, and the axis is at the home position	ON when the home return operation is completed, and the axis in at the home position
Jog output	RX(n+4)8 to RX(n+4)F	This indicates a status where jog command cannot be received, operation is in progress, or similar condition.	

[Connection of Dedicated CC-Link Cable]

The order of cable connection is unrelated to the station number.
Be sure to always connect the terminating resistor to the units on both ends of the CC-Link system.
Connect the terminating resistor between DA and DB.
In the CC-Link system, the terminating resistor that is connected varies depending on the cable.

Cable type	Terminating resistor
Dedicated CC-Link Cable	110Ω 1/2W (brown-brown-brown)
Ver. 1.10 compliant dedicated CC-Link cable	
Dedicated CC-Link high-performance cable	130Ω 1/2W (brown-orange-brown)

This controller does not include a terminating resistor.
The master unit can also be connected to a location other than both ends.
A star connection is not possible.
The connection method is shown below.

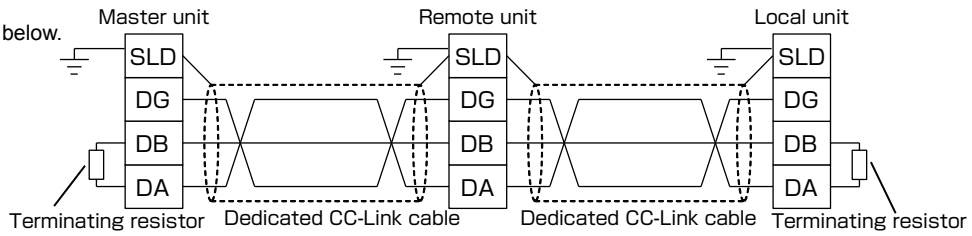

For details on the cable connections, see the master station instruction manual and CC-Link Cable Wiring Manual (available from the CC-Link Partner Association).

CC-Link connecteor terminal box

Pin No.	Signal name	Wire color
4	Shield (SLD)	Shield
3	Degital GND (DG)	Yellow
2	Communication cable (DB)	White
1	Communication cable (DA)	Blue

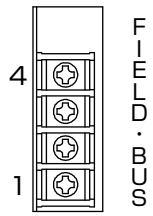

Discontinue

High-performance master unit: (designed for DeviceNet) KCA-20-M00

[System Input/Output] * For the I/O signal list, see page 202.

(1) [System Input] (DeviceNet master station → KCA-20-M00 / M01)

Signal name	Output device	Normal mode	External point specifying mode	Remarks
Home return (*2)	+0	ON: Home return operation start	Home return	Rising edge detection
Start (*2)	+1	ON: Restart from currently-stopped step and paused state	ON: Movement is started based on the information of the currently-specified table	ON ON
Stop (*2)	+2	ON: Stop after current step is completed	Disabled	Home return and start input are disabled when this input is ON.
Reset (*2)	+3	ON: Clearing of error state (enabled while program execution is stopped)	ON: Clearing of error state	
Jog input	+72 to +79	Three types of operation modes (inching, low-speed movement, high-speed movement) and the movement direction are specified, and jog movement is performed for the selected axis.		

*1: Offset amount from the starting device (unit: bits)
*2: Home return, start, stop, and reset are used based on the parameter settings.

(2) [System Output] (KCA-20-M00 / M01 → DeviceNet master station)

Signal name	Output device	Normal mode	External point specifying mode
During operation	+0	ON during controller execution and during home return operation	ON during robot operation
Error	+1	ON when error occurs	Same as left
Positioning complete	+2	ON when robot completes positioning OFF when movement of the robot is in progress (remains at OFF when stopped by pause)	Same as left
Home return complete	+3	ON when the home return operation is completed	Same as left
Jog output	+72 to +79	This indicates a status where jog command cannot be received, operation is in progress, or similar condition.	

*1: Offset amount from the starting device (unit: bits)

[Connection of Dedicated DeviceNet Cable]

The order of cable connection is unrelated to the station number (MAC ID).
Be sure to always connect the terminating resistor to the both ends of the trunk line (121Ω, 1% metal coating, 1/4W).
Connect the terminating resistor between CANH and CANL.
This controller does not include a terminating resistor.

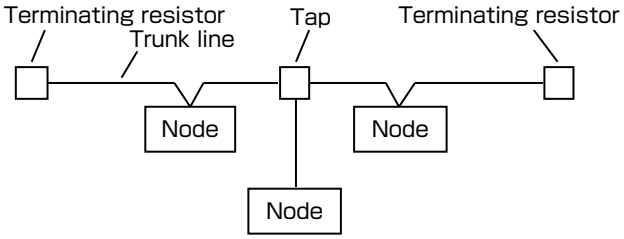

For details on the cable connections, see the master station instruction manual, or refer to the document issued by the ODVA.

[DeviceNet Connector]

This is a connector for connecting a dedicated DeviceNet cable for establishing a data link.
It is included with this controller.

Pin No.	Signal name	Wire color
1	V–	Black
2	CANL	Blue
3	Shield	Shield
4	CANH	White
5	V+	Red

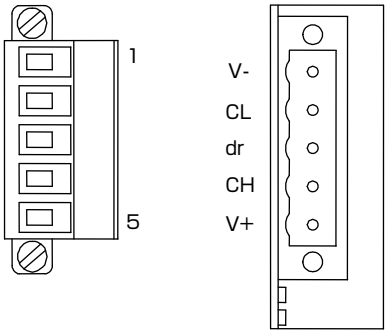

Discontinue

Slave unit: KCA-20-S10, KCA-20-S40
[Example connection of input and output]

* For the table of I/O pin numbers, see Page 202.

[General-purpose input]

General-purpose input internal circuit

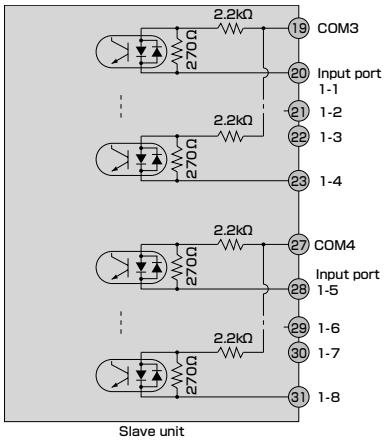

Example connection of external sensor

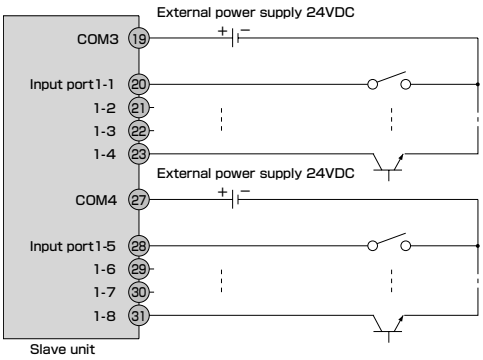

Example connection of sequencer (i.e., PLC)

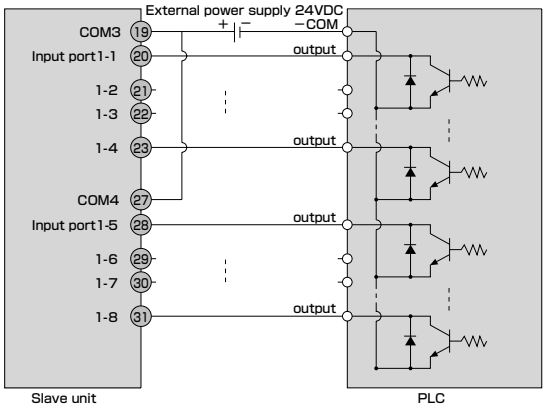

[General-purpose output]

General-purpose output internal circuit

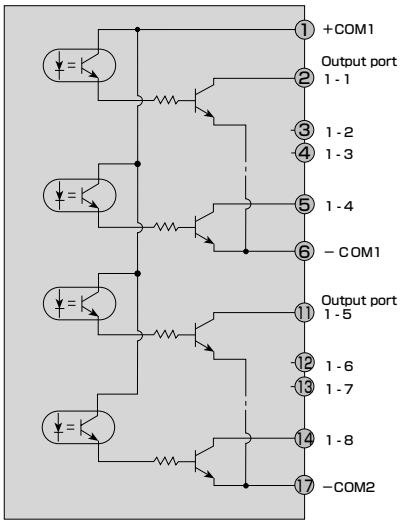

Slave unit Output port 1-1 to 1-8 MAX300mA/1 point

Example connection of external device

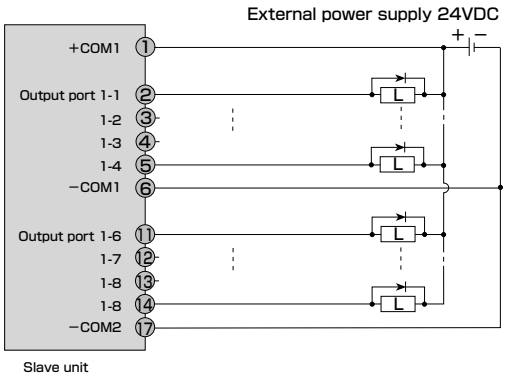

Example connection of sequencer (i.e., PLC)

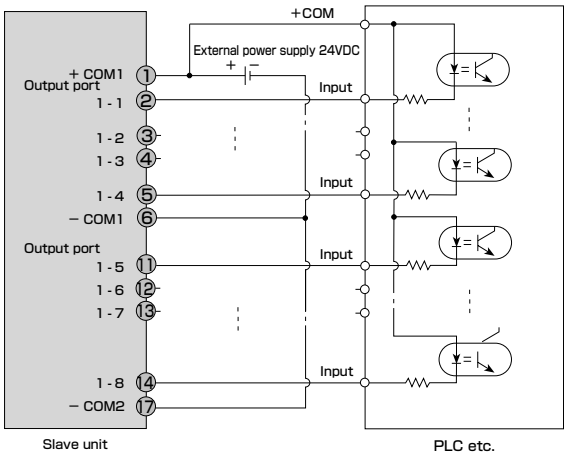

Discontinue

Extension I/O unit: KCA-20-EX-A20
[Example connection of input and output]

* For the table of I/O pin numbers, see Page 206.

[General-purpose input]

General-purpose input internal circuit

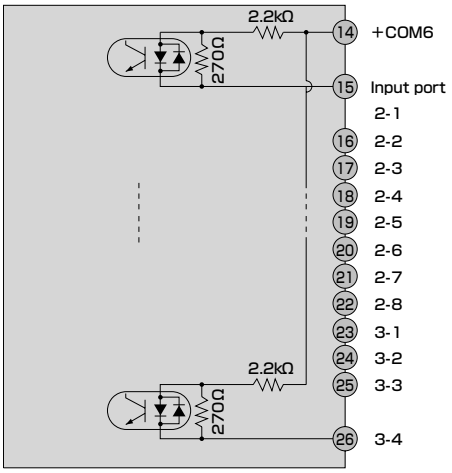

Example connection of external sensor

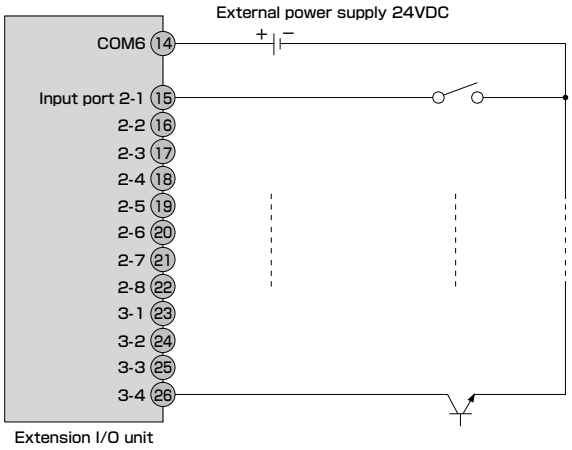

Example connection of sequencer (i.e., PLC)

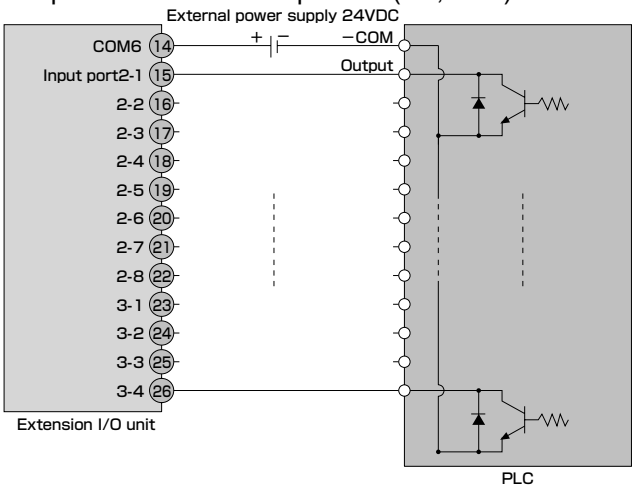

[General-purpose output]

General-purpose output internal circuit

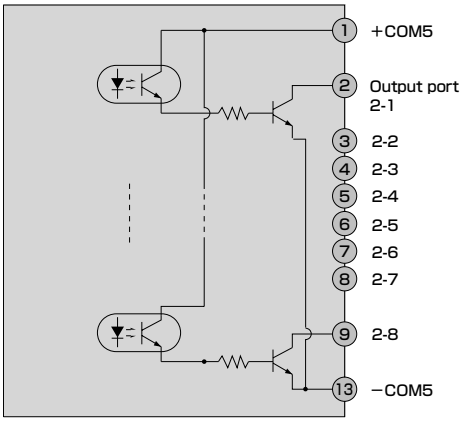

Example connection of external device

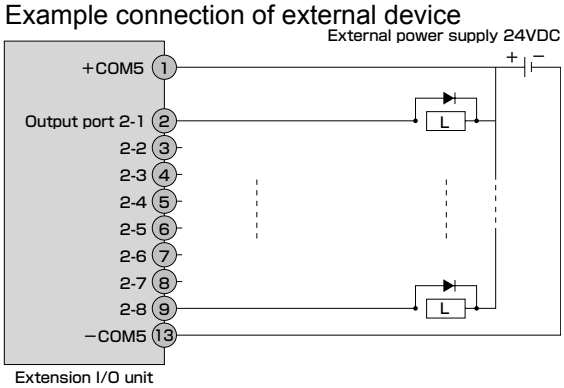

Example connection of sequencer (i.e., PLC)

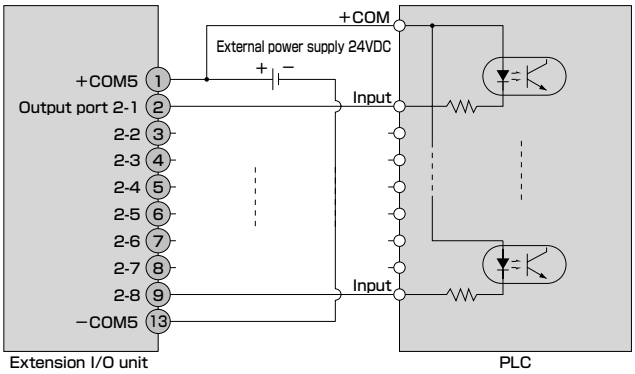

MEMO

Discontinue

How to Calculate Tact (Cycle) Time

The tact time (cycle time) of a single robot can be figured out from the following calculations. It provides only a yardstick, however, because the time thus calculated differs more or less from actual time.

The calculation comes in the two methods; Example calculation 1 (when equi-speed interval is included) and Example calculation 2 (when an axis starts decelerating during acceleration). Either calculation method is selectable according to the relationship between travel distance, specified speed and specified acceleration/deceleration time.

[1] When "travel distance > specified speed (V) × specified acceleration/deceleration time (ACC)" ⇒ Example calculation 1
[2] When "travel distance ≤ specified speed (V) × specified acceleration/deceleration time (ACC)" ⇒ Example calculation 2

- For the acceleration/deceleration time, refer to the relationship between acceleration/deceleration and load as shown in the next page.
- For the acceleration/deceleration time and maximum speed under max. load capacity, refer to the specifications of each axis type.

Example calculation 1

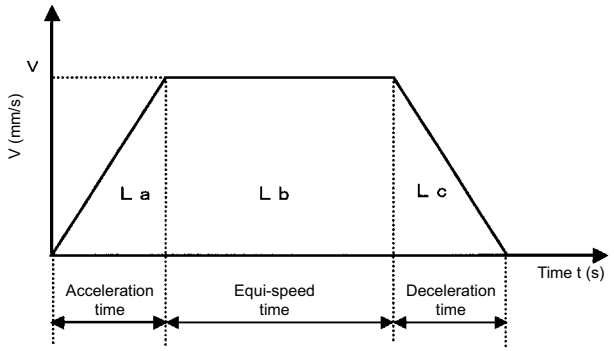

La = Travel distance at acceleration (mm)
Lb = Travel distance at equi-speed (mm)
Lc = Travel distance at deceleration (mm)
Lt = Equi-speed time (s)
L = Travel distance (mm) = La + Lb + Lc
V = Specified speed (mm/s)
t = Time (s)
Acc = Specified acceleration/deceleration time (s)

<Operating conditions>
Specified speed : V = 1,000 mm/s
Specified acceleration/deceleration time : ACC = 0.3 s
Travel distance: L = 400 mm

$$La = \frac{1}{2} \times V \times Acc = \frac{1}{2} \times 1000 \times 0.3 = 150\text{mm}$$

$$Lc = \frac{1}{2} \times V \times Acc = \frac{1}{2} \times 1000 \times 0.3 = 150\text{mm}$$

$$Lt = \frac{L - (La + Lc)}{V} = \frac{400 - (150 + 150)}{1000} = 0.1\text{s}$$

Tact time = Acceleration time + Equi-speed time + Deceleration time
= 0.3 + 0.1 + 0.3
= <u>0.7 sec</u>

Example calculation 2

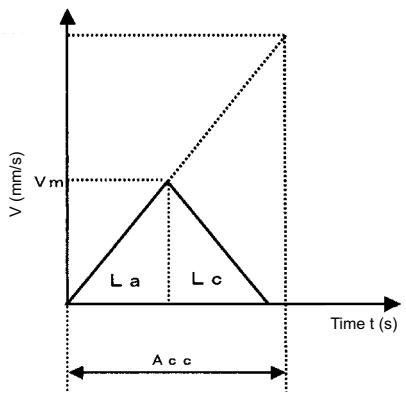

V = Specified speed (mm/s)
Vm = Real maximum speed (mm/s)
L = Travel distance (mm)
La = Travel distance at acceleration (mm)
Lc = Travel distance at deceleration (mm)
Acc = Specified acceleration/deceleration time (s)
t = Time (s)

<Operating conditions>
Specified speed : V = 1,000 mm/s
Specified acceleration/deceleration time : ACC = 0.3 s
Travel distance: L = 200 mm

$$La = \frac{L}{2} = \frac{200}{2} = 100\text{mm}$$

$$Lc = \frac{L}{2} = \frac{200}{2} = 100\text{mm}$$

$$\text{Tact time} = 2\sqrt{\frac{L \times ACC}{V}} = 2\sqrt{\frac{200 \times 0.3}{1000}}$$

= <u>0.49 sec</u>

Discontinue

Relationship between acceleration / deceleration and load

Horizontal

Load capacity (kg)

Drive system	Type	Set speed (mm/s)	Lead (mm)	Acceleration / deceleration time(s) (Note 1)					
				0.1	0.2	0.3	0.4	0.5	0.6
Ball screw type	KBB-05D	800	12	4	5	6	6	6	6
		400	6	8	10	15	15	15	15
	KBB-07D	800	12	4	5	12	12	12	12
		400	6	10	15	30	30	30	30
	KBB-10E	1000	20	7	11	15	15	15	15
		500	10	20	25	30	30	30	30
		250	5	25	35	50	50	50	50
	KBB-30E	1000	20	12	18	20	20	20	20
		"500,250"	"10,5"	25	35	50	50	50	50
	KBB-30F	1000	20	25	35	40	40	40	40
		"500,250"	"10,5"	50	65	80	80	80	80
	KBB-50F	1000	20	25	40	60	60	60	60
		"500,250"	"10,5"	50	75	100	100	100	100
	KBB-50G	1000	20	40	70	100	100	100	100
		"500,250"	"10,5"	60	100	150	150	150	150
Timing belt type	KBB-10E	1000	21	5	10	15	15	15	15
	KBB-10F	1000	21	10	15	20	20	20	20
		2000	42	2	4	6	8	10	10
	KBB-30E	1000	21	5	10	15	15	15	15
	KBB-30F	1000	21	10	20	40	40	40	40
		2000	42	6	10	12	14	20	20
	KBB-50F	1000	21	10	20	40	40	40	40
	KBB-50G	2000	42	7	10	12	14	20	20

Vertical

Load capacity (kg)

Drive system	Type	Set speed (mm/s)	Lead (mm)	Acceleration / deceleration time(s) (Note 1)					
				0.1	0.2	0.3	0.4	0.5	0.6
Ball screw type	KBB-05D	800	12	1	2	3	3	3	3
		400	6	2	3	4	4	4	4
	KBB-07D	800	12	1	2	4	4	4	4
		400	6	3	5	8	8	8	8
	KBB-10E	1000	20	3	4	5	5	5	5
		500	10	6	9	12	12	12	12
		250	5	17	20	22	22	22	22
	KBB-30E	1000	20	3	4	5	5	5	5
		500	10	6	9	12	12	12	12
		250	5	17	20	22	22	22	22
	KBB-30F	1000	20	6	7	10	10	10	10
		500	10	14	16	20	20	20	20
		250	5	30	35	40	40	40	40
	KBB-50F	1000	20	8	10	12	12	12	12
		500	10	15	20	25	25	25	25
		250	5	30	40	50	50	50	50
	KBB-50G	1000	20	20	22	25	25	25	25
		500	10	30	40	50	50	50	50
		250	5	40	50	60	60	60	60

Note 1: The acceleration/deceleration time is the time until an axis reaches the set speed as given in the table.
* For the pause time after travel, 1.0 s or over is necessary.
* Vibration may be caused under some installation conditions.
* The load capacity given above is exerted just above the slider.

[KBB Series] Component List per Unit

Single axis control system (For details, see the pages for each unit and fill in this sheet)

Guide No.	Unit name	Code designation	Q'ty	Guide No.	Unit name	Code designation	Q'ty
1	Actuator (axis)	KBB- □□ □ – □□ – □ □□ □ – □□					
2	Controller cable	KBB-10 – CC – M □□					
3	Controller (master unit)	KCA-20 – M □□					
4	Extension I/O unit	KCA-20 – EX – A 2 0					
5	I/O cable (for master unit)	KCA-10 – IC – A □□					
	I/O cable (for extension unit)	KCA-10 – IC – B □□					
6	Regenerative discharge unit	KCA – ABSU – □ 000					
7	Teach pendant	KCA – TPH – 4C					

Notes on filling this sheet:

* Fill in necessary numbers and alphabets in the boxes ☐ together with required quantities.
* Packing charge, transportation fee and excise tax shall be quoted separately.
* This component list may not be adequate, depending on user's requirements.

Discontinue

[KBB Series] Component List per Unit

2-axis, 3-axis or 4-axis control system (For details, see the pages for each unit and fill in this sheet)

Guide No.	Unit name	Code designation	Q'ty	Guide No.	Unit name	Code designation	Q'ty
1	Actuator(axis 1)	KBB - □□□ □ - □□□ - □ - □□□ □ - □□□		6	Tube tray, flexible tray	KBA-10-TT - □ □□□	
	Actuator(axis 2)	KBB - □□□ □ - □□□ - □ - □□□ □ - □□□		7	Cable grip	KBA-10-CG-M2 □	
	Actuator(axis 3)	KBB - □□□ □ - □□□ - □ - □□□ □ - □□□		8	Strain relief	KBA-10-SC-A02	
	Actuator (axis 4 :R-axis)	KBB-00D □□ - □		9	Controller (master)	KCA- □ -M □□□	
2	Axis combination bracket	KBA - □□ - BK - □□□			Controller (slave)	KCA-20-S □□	
		KBA - □□ - BK - □□□		10	Link cable	KCA-10-LC-A □□	
3	Controller cable	KBB-10-CC-M □□		11	Extension I/O unit	KCA-20-EX-A20	
		KBB-10-CC-M □□		12	I/O cable (for CA20-M10,M40) (CA20-S10,S40)	KCA-10-IC-A □□	
		KBB-10-CC-M □□			I/O cable (for CA20-EX-A20)	KCA-10-IC-B □□	
		KBB-10-CC-M □□			I/O cable (for CA10-M00) (for CA10-EX-B40)	KCA-ICBL- □ 00	
4	CN box	KBA-10-BX- □□□		13	Regenerative discharge unit	KCA-ABSU- □ 000	
		KBA-10-BX- □□□		14	Teach pendant	KCA-TPH- □□	
		KBA-10-BX- □□□					
5	Flexible tube Flexible duct	KBA-10- □□ - □ □□					
		KBA-10- □□ - □ □□					
		KBA-10- □□ - □ □□					

Notes on filling this sheet:
* Fill in necessary numbers and alphabets in the boxes □ together with required quantities.

* Packing charge, transportation fee and excise tax shall be quoted separately.
* This component list may not be adequate, depending on user's requirements.

Discontinue

MEMO

MEMO

Discontinue

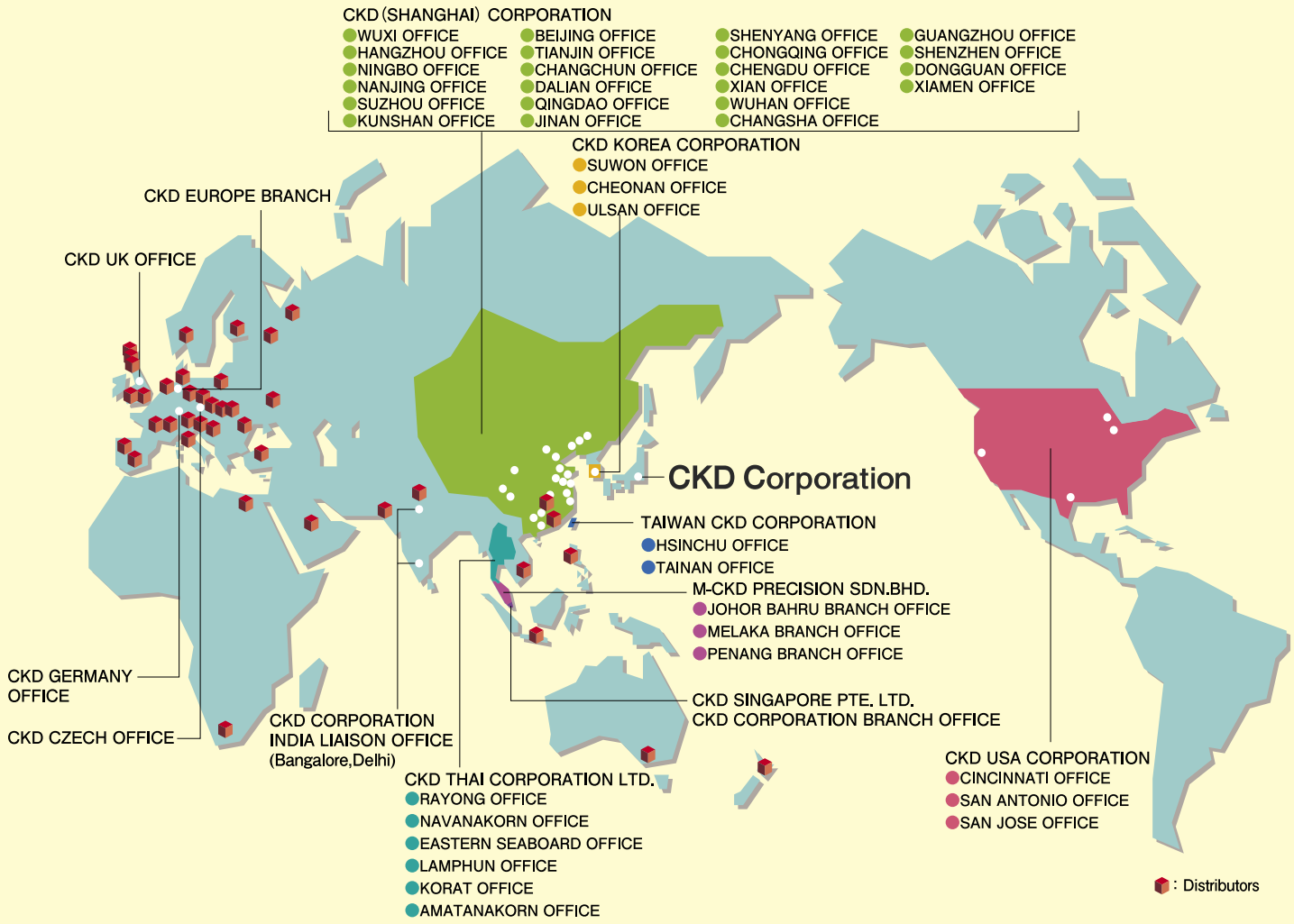

CKD Corporation

Website http://www.ckd.co.jp/

□ OVERSEAS SALES ADMINISTRATION DPT.
SALES AND MARKETING DIV. 2-250 Ouji Komaki, Aichi 485-8551, Japan
□ PHONE +81-(0)568-74-1338 FAX +81-(0)568-77-3461

U.S.A.
CKD USA Corporation
● Chicago Headquarters
4080 Winnetka Avenue, Rolling Meadows, IL 60008, USA
PHONE +1-847-368-0539 FAX +1-847-788-0575

Europe
CKD Corporation Europe Branch
De Fruittuinen 28, Hoofddorp, the Netherlands
PHONE +31-(0)23-5541490 FAX +420-321-622-055

Malaysia
M-CKD Precision Sdn. Bhd.
● Head Office
Lot No. 6, Jalan Modal 23/2, Seksyen 23, Kawasan MIEL,
Fasa 8, 40300 Shah Alam, Selangor Darul Ehsan, Malaysia
PHONE +60-(0)3-55411468 FAX +60-(0)3-55411533

Thailand
CKD Thai Corporation Ltd.
● Sales Headquarters
Suwan Tower, 14/1 Soi Saladaeng 1, North Sathorn Road,
Kwaeng Silom, Khet Bangrak, Bangkok 10500, Thailand
PHONE +66-(0)2-267-6300 FAX +66-(0)2-267-6304-5

Singapore
CKD Singapore Pte. Ltd.
33 Tannery Lane, #04-01 Hoesteel Industrial Building, Singapore 347789, Singapore
PHONE +65-6744-2623 FAX +65-6744-2486
CKD Corporation Branch Office
33 Tannery Lane, #04-01 Hoesteel Industrial Building, Singapore 347789, Singapore
PHONE +65-6744-7260 FAX +65-6744-1022

Taiwan
Taiwan CKD Corporation
16F-3, No. 109, Sec. 1, Zhongshan Rd., Xinzhuang Dist., New Taipei
City 242, Taiwan
PHONE +886-(0)2-8522-8198 FAX +886-(0)2-8522-8128

China
CKD (Shanghai) Corporation
● Sales Headquarters / Shanghai Office
Room 601, Yuanzhongkeyan Building, No. 1905 Hongmei Road, Xuhui District,
Shanghai 200233, China
PHONE +86-(0)21-61911888 FAX +86-(0)21-60905356

Korea
CKD Korea Corporation
● Headquarters
3rd Floor, Samyoung Building, 371-20,
Sinsu-Dong, Mapo-Gu, Seoul 121-856, Korea
PHONE +82-(0)2-783-5201～5203 FAX +82-(0)2-783-5204

The goods and their replicas, or the technology and software in this catalog are subject to complementary export regulations by Foreign Exchange and Foreign Trade Law of Japan.
If the goods and their replicas, or the technology and software in this catalog are to be exported, laws require the exporter to make sure they will never be used for the development or the manufacture of weapons for mass destruction.

●Specifications are subject to change without notice.

2013.8.GZZ