CKD

Electric Actuator
Motorless General Catalog

Our style for new world standards.



ROBODEX Std.

CKD Corporation

CB-055A 1

Compatible with all device applications and compact and efficient.

That is CKD's new approach.

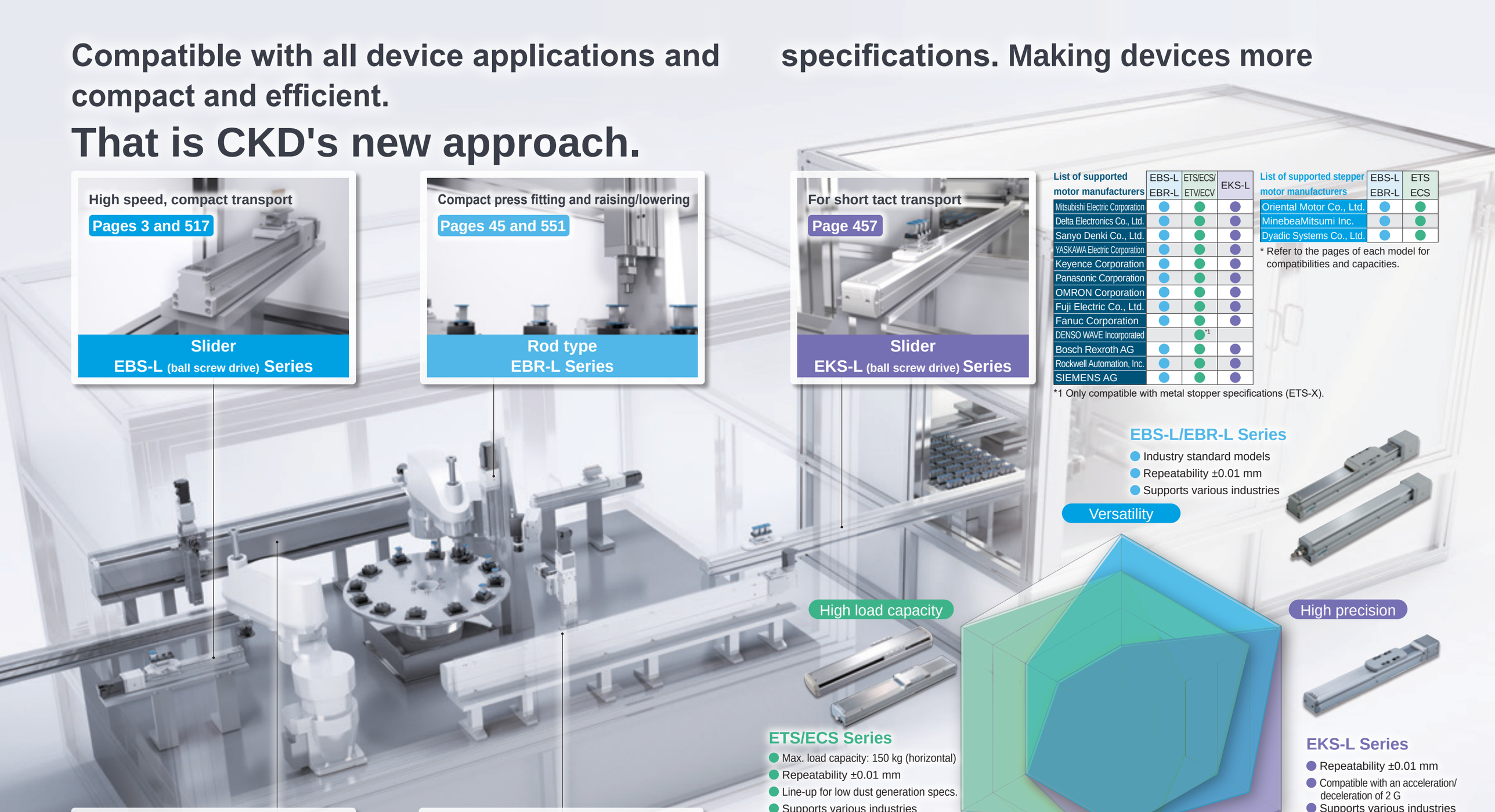

High speed, compact transport

Pages 3 and 517

Slider
EBS-L (ball screw drive) Series

Compact press fitting and raising/lowering

Pages 45 and 551

Rod type
EBR-L Series

For short tact transport

Page 457

Slider
EKS-L (ball screw drive) Series

For high load capacity Pages 85 and 583

Slider ETS (ball screw drive) Series
ECS (ball screw drive, low dust generation) Series

For long stroke transport Pages 343 and 399

Slider ETV (belt drive) Series
ECV (belt drive, low dust generation) Series

specifications. Making devices more

List of supported motor manufacturers	EBS-L EBR-L	ETS/ECS/ ETV/ECV	EKS-L
Mitsubishi Electric Corporation	●	●	●
Delta Electronics Co., Ltd.	●	●	●
Sanyo Denki Co., Ltd.	●	●	●
YASKAWA Electric Corporation	●	●	●
Keyence Corporation	●	●	●
Panasonic Corporation	●	●	●
OMRON Corporation	●	●	●
Fuji Electric Co., Ltd.	●	●	●
Fanuc Corporation	●	●	●
DENSO WAVE Incorporated		●*1	
Bosch Rexroth AG	●	●	●
Rockwell Automation, Inc.	●	●	●
SIEMENS AG	●	●	●

*1 Only compatible with metal stopper specifications (ETS-X).

List of supported stepper motor manufacturers	EBS-L EBR-L	ETS ECS
Oriental Motor Co., Ltd.	●	●
MinebeaMitsumi Inc.	●	●
Dyadic Systems Co., Ltd.	●	●

* Refer to the pages of each model for compatibilities and capacities.

EBS-L/EBR-L Series

- Industry standard models
- Repeatability ±0.01 mm
- Supports various industries

Versatility

High load capacity

ETS/ECS Series

- Max. load capacity: 150 kg (horizontal)
- Repeatability ±0.01 mm
- Line-up for low dust generation specs.
- Supports various industries

Wide variety

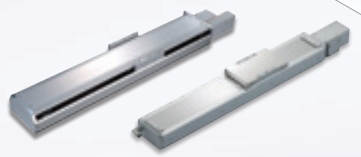

ETV/ECV Series

- Max. stroke length: 3500 mm
- Line-up for low dust generation specifications
- Supports various industries

Long stroke length

High precision

EKS-L Series

- Repeatability ±0.01 mm
- Compatible with an acceleration/ deceleration of 2 G
- Supports various industries

Short tact



High speed, compact transport

Slider EBS-L (ball screw drive) Series

For saving more equipment space

Compact highly rigid body

The load supporting guide used is an **outer rail**. The **broad guide is integrated with the body** to enable a compact and highly rigid design.

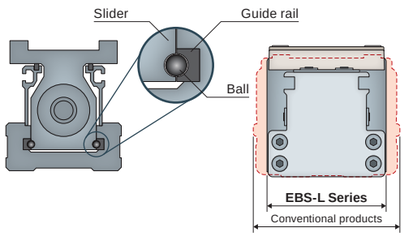

	Body width	Static allowable moment		
		MP	MY	MR
Conventional products	65 mm	80 N·m	70 N·m	75 N·m
EBS-05L	54 mm	103 N·m	103 N·m	144 N·m
	⬇ 11 mm Less	⬇ 28% More	⬇ 47% More	⬇ 92% More

Easy maintenance

Equipped with a greasing port

Equipped with a port that enables **direct greasing from the outside**. Maintenance can be performed on the guide and ball screw by greasing them **from one point** without disassembling the body.

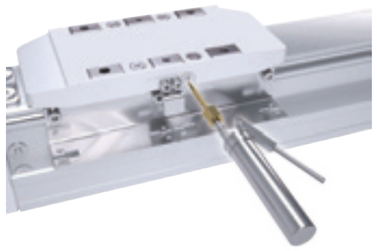





Compact press fitting and raising/lowering

Rod EBR-L Series

Reduces body mounting work hours

Mounting holes provided on the top and bottom of the body

Direct mounting from the top and bottom **is possible without removing the cover**. Work is significantly reduced especially when mounting from the top.

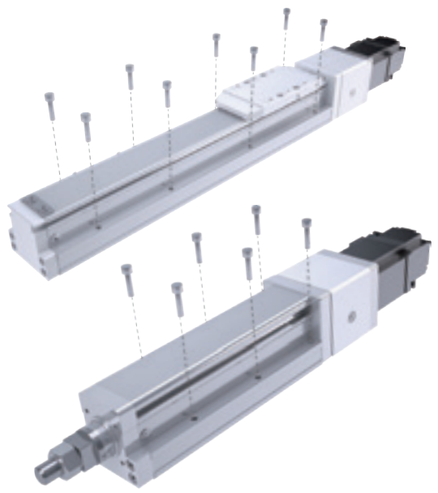

Reduces the necessity for attached guides

Guide integrated rod

The same **guide** used in EBS-L Slider is integrated. A strong structure for offset workpieces as well. Realizes a **stroke longer than conventional strokes**.

Compatible with offset workpieces

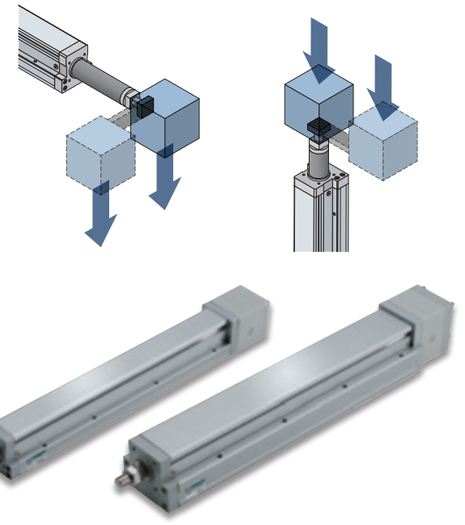



A wide variety that corresponds to a multitude of applications and specifications

Slider ETS/ECS/ETV/ECV Series

A wide variety that covers all models

Max. load capacity 150 kg
Max. stroke length 3500 mm
Max. speed 2000 mm/s
Lead 2 to 40 mm

* ETS and ETV are described with their max. ranges.

There are many varieties made to correspond to all applications and specifications used in the industry based on ball screw drive ETS and belt drive ETV.

Prevent further dust generation with ECS and ECV

Full cover + suction port

The ECV with low dust generation specifications uses the same ball screw drive as ETS and the same belt drive as ECS and ETV with low dust generation specifications. Low dust generation realized with a gapless structure and the suction port. Ideal for liquid crystal panel manufacturing lines and foodstuff lines.



Easy maintenance

Grease nipple equipped

* Select by model No.



Equipped with a grease nipple that enables **direct greasing from the outside**. Maintenance can be performed on the guide and ball screw by greasing them **from one point** without disassembling the body.

Simple position detection with high precision

Origin sensor and limit sensor provided

Simple and highly accurate position detection enabled by the photomicro sensor. The sensor mounting direction can also be selected.



Outside sensor



Outside sensor dog



For high load capacity

Slider ETS (ball screw drive) Series
ECS (ball screw drive, low dust generation) Series



For long stroke transport

Slider ETV (belt drive) Series
ECV (belt drive, low dust generation) Series

Customize to fit the equipment space

Lineup with a wide variety of motor mounting directions

ETS ECS



Straight installation | Built-in installation | Right mounting | Bottom mounting | Left mounting

Motor mounting directions for 5 types of ball screw drive and 6 types of belt drive are provided. Effectively uses the available equipment space.

ETV ECV

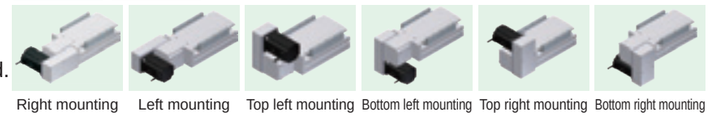

Right mounting | Left mounting | Top left mounting | Bottom left mounting | Top right mounting | Bottom right mounting

* The images above use sizes ETS-10 and above

Accurate origin positioning is possible

Equipped with metal stoppers ETS

The metal stoppers make **push origin positioning** easier and more secure.

* Compatible with sizes ETS-06 and above.

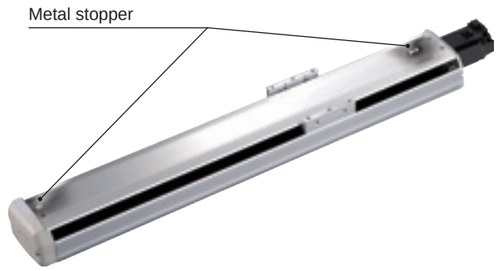

Slider

ETS Multi Axis Series

Ideal for multi-axis operation suited to the application ETS

Multiple models suited to a wide variety of specifications.

A type (X-Y axes)
Max. load capacity: 50 kg
6 Sizes



G type (with X-Y axes support guide)
Max. load capacity: 50 kg
2 Sizes



P type (X-Z axes)
Max. load capacity: 35 kg
3 Sizes



F type (X-Y axes)
Max. load capacity: 22 kg
3 Sizes



For rechargeable batteries

P4 Series

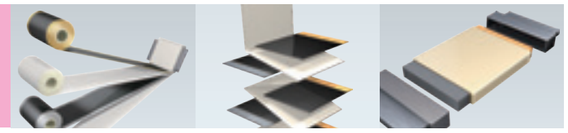

Suited to the rechargeable battery manufacturing processes

EBS EBR EKS ..... Catalog No. ▶ CC-1431A

ETS ECS ..... Catalog No. ▶ CC-1283A

- Limits the usage of copper-based materials
- Usable even in ultra-dry environments with a low dew point
- Optional anti-rust treatment also available



For Food Manufacturing Processes

FP1 Series



Ideal for the foodstuffs industry

EBS EBR EKS ..... Catalog No. ▶ CC-1430A

ETS ECS ETV ECV ..... Catalog No. ▶ CC-1320A

- Food-grade NSF H1 lubricants are used on flow paths and sliding portions.

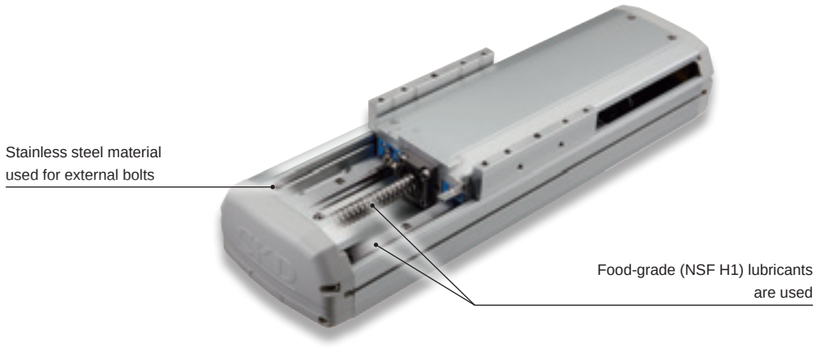

ROBODEX Std.



Slider EKS-L (ball screw drive) Series

Shortened tact time

Compatible with an acceleration/deceleration of 2 G

A wider ball screw size than conventional models to **further shorten tact and increase speed**. Compatible with **acceleration/deceleration up to 4 G** depending on conditions.

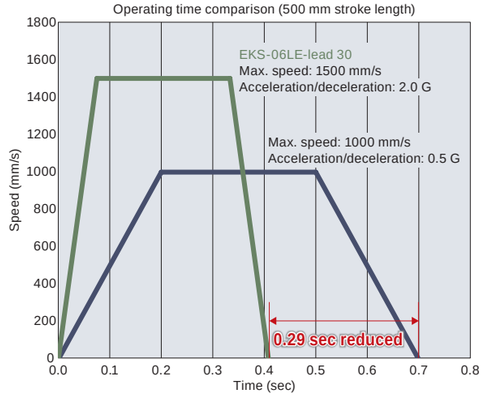

For saving more equipment space

Iron body with a strong structure for load and moment

Adopts a U-shaped **outer rail guide** with an iron body. Realized an actuator with a **strong structure suited to moments generated by short tact**.



Servo motor compatible electric actuator



CONTENTS

Product introduction		Intro
■ Slider (standard model)	EBS-L	3
■ Rod with built-in guide	EBR-L	45
■ Slider (ball screw drive)	ETS	85
■ ETS Multi-Axis (ball screw drive)		163
■ Slider (ball screw drive low dust specifications)	ECS	271
■ Slider (belt drive)	ETV	343
■ Slider (belt drive low dust specifications)	ECV	399
■ Slider (fast tact/high rigidity model)	EKS-L*	457
⚠ Safety precautions		686
Model selection check sheet		708

Safety precautions

Stepper motor compatible				Servo motor compatible							
ECS	ETS	EBR	EBS	EKS	ECV	ETV	ECS	ETS Multi-Axis	ETS	EBR	EBS

EBS-L

Slider (standard model)

Servo motor compatible electric actuator
Motorless specification

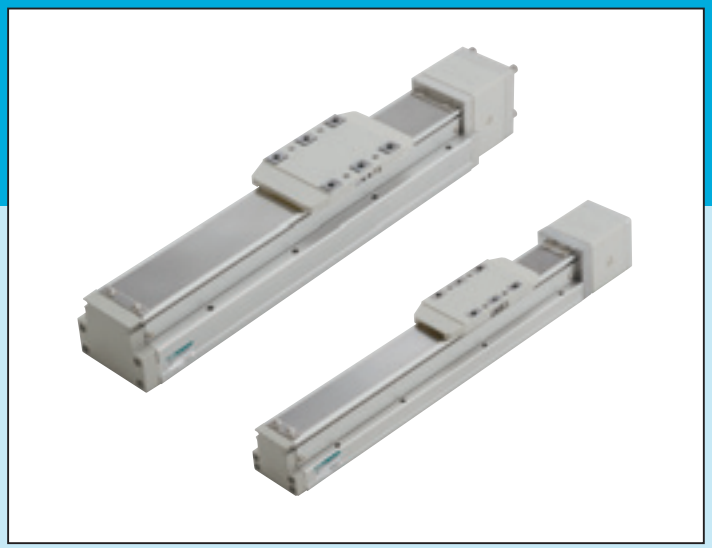

CONTENTS

Product introduction	Intro
Series variation	4
● Specifications/How to order/Dimensions	
· EBS-04L	8
· EBS-05L	14
· EBS-08L	20
· EBS-12L	26
● Model selection	32
● Technical data	34
⚠ Safety precautions	686
Model Selection Check Sheet	708

Series variation

Type	Model No.		Applicable motor size (W)	Body width (mm)	Screw lead (mm)	Max. load capacity (kg) Horizontal *1	Max. load capacity (kg) Vertical	Stroke length (mm) and max. speed (mm/s) *2	Page
Slider		EBS-04L*-06	50	44	6	20	5	50 mm: 300 mm/s; 100–500: 300 mm/s; 550: *3 1.7 sec	8
		EBS-04L*-12			12	12	2	50 mm: 600; 100–500: 600; 550: 0.89 sec	
		EBS-05L*-02	100	54	2	30	10	50 mm: 100; 100–500: 100; 600: 90; 650: 80; 700: 70; 750: 60; 800: 13.34 sec	14
		EBS-05L*-05			5	30	10	50 mm: 250; 100–500: 250; 600: 225; 650: 200; 700: 175; 750: 150; 800: 5.35 sec	
		EBS-05L*-10			10	15	5	50 mm: 500; 100–500: 500; 600: 450; 650: 400; 700: 350; 750: 300; 800: 2.7 sec	
		EBS-05L*-20			20	10	2.5	50 mm: 1000; 100–500: 1000; 600: 900; 650: 800; 700: 700; 750: 600; 800: 1.39 sec	
		EBS-08L*-05	200	82	5	50	15	50 mm: 250; 100–500: 250; 600: 225; 650: 200; 700: 175; 750: 150; 800: 125; 850: 100; 900: 75; 950: 50; 1000: 22.01 sec	20
		EBS-08L*-10			10	30	8	50 mm: 500; 100–500: 500; 600: 450; 650: 400; 700: 350; 750: 300; 800: 250; 850: 200; 900: 150; 950: 100; 1000: 11.01 sec	
		EBS-08L*-20			20	12	2.5	50 mm: 1000; 100–500: 1000; 600: 900; 650: 800; 700: 700; 750: 600; 800: 500; 850: 400; 900: 300; 950: 200; 1000: 5.52 sec	
		EBS-12L*-05	400	120	5	110	33	50 mm: 250; 100–500: 250; 600: 225; 650: 200; 700: 175; 750: 150; 800: 140; 850: 130; 900: 120; 950: 110; 1000: 100; 1050: 90; 1100: 80; 1150: 15.63 sec	26
		EBS-12L*-10			10	88	22	50 mm: 500; 100–500: 500; 600: 450; 650: 400; 700: 350; 750: 325; 800: 300; 850: 275; 900: 250; 950: 225; 1000: 200; 1050: 175; 1100: 150; 1150: 8.35 sec	
		EBS-12L*-20			20	40	10	50 mm: 1000; 100–500: 1000; 600: 900; 650: 800; 700: 700; 750: 650; 800: 600; 850: 550; 900: 500; 950: 450; 1000: 400; 1050: 350; 1100: 300; 1150: 4.2 sec	
		EBS-12L*-32			32	30	8	50 mm: 1600; 100–500: 1600; 600: 1450; 650: 1300; 700: 1150; 750: 1050; 800: 950; 850: 850; 900: 750; 950: 650; 1000: 550; 1050: 450; 1100: 350; 1150: 3.61 sec	

*1: The load capacity when wall mounted is the same as for horizontal installation.
*2: The max. speed is the speed when the motor mounted by the customer can output a rotation speed of 3000 rpm. The max. speed is restricted by the stroke. Do not move at speeds beyond the limit.
*3: ⏱ shows the positioning time. Maximum stroke when installed horizontally and operated at max. speed and max. acceleration/deceleration. Note that this is not the value at maximum load capacity.

How to order

Slider

EBS - 05 L E - 02 0300 N NN - M 1 N N

(A) (B) (C) (D) (E) (F) (G) (H) (I) (J)

(A) Body size	
04	Body width 44mm
05	Body width 54mm
08	Body width 82mm
12	Body width 120mm

(B) Motor	
L	None

(C) Motor mounting direction	
E	Straight mounting
R	Right mounting
D	Bottom mounting
L	Left mounting

(D) Screw lead	
02	2 mm
05	5 mm
06	6 mm
10	10 mm
12	12 mm
20	20 mm
32	32 mm

(E) Stroke length	
0050 to 1250	50 mm (In 50 mm increments) 1250 mm

(F) Brake	
N	None

(G) Mounted motor specification	
M, Y, P, F	Refer to the list on the page at right

(H) Motor size	
H	50 W
1	100 W
2	200 W
4	400 W

(I) Origin sensor	
N	None
C	Yes

(J) Limit sensor	
N	None
B	Yes

*This product is composed of an actuator (and motor mounting parts) only; there is no motor attached.
The user must prepare, mount, and adjust the motor and driver.

List of servo motors recommended for mounting

Code	Manufacturer	Series	50 W	100 W
M	Mitsubishi Electric Corporation	MELSERVO J4	HG-KR053	HG-KR13
		MELSERVO J5	HK-KT053W	HK-KT13W
	Delta Electronics Co., Ltd.	ECMA-C	ECMA-C1040F	ECMA-C10401
	Sanyo Corporation, Ltd.	SANMOTION R	R2□A04005	R2□A04010
Y	YASKAWA Electric Corporation	Σ-V	SGMJV-A5	SGMJV-01
		Σ-7	SGM7J-A5	SGM7J-01
	Keyence Corporation	SV	SV-□005	SV-□010
		SV2	SV2-□005	SV2-□010
P	Panasonic Corporation	MINAS A5	MSMD5A	MSMD01
		MINAS A6	MSMF5A	MSMF01
M	OMRON Corporation	G5	R88M-K05030	R88M-K10030
		1S	R88M-1M05030	R88M-1M10030
	Fuji Electric Co., Ltd.	ALPHA7 GYS	GYS500D7-□B2□	GYS101D7-□B2□
		ALPHA7 GYB	-	-
F	FANUC CORPORATION	βiS-B	A06B-0111-B1	A06B-0112-B1
P	Bosch Rexroth AG	MSM	MSM019A	MSM019B
M	Rockwell Automation, Inc.	TLP	TLP-A046-005-DKA□2	TLP-A046-010-DKA□2
	SIEMENS AG	1FK2 *1	1FK2102-0AG0	1FK2102-1AG0

Code	Manufacturer	Series	200 W	400 W
M	Mitsubishi Electric Corporation	MELSERVO J4	HG-KR23	HG-KR43
		MELSERVO J5	HK-KT23W	HK-KT43W
	Delta Electronics Co., Ltd.	ECMA-C	ECMA-C10602	ECMA-C10604
	Sanyo Corporation, Ltd.	SANMOTION R	R2□A06020	R2□A06040
Y	YASKAWA Electric Corporation	Σ-V	SGMJV-02	SGMJV-04
		Σ-7	SGM7J-02	SGM7J-04
	Keyence Corporation	SV	SV-□020	SV-□040
		SV2	SV2-□020	SV2-□040
P	Panasonic Corporation	MINAS A5	MSMD02	MSMD04
		MINAS A6	MSMF02	MSMF04
	OMRON Corporation	G5	R88M-K20030	R88M-K40030
		1S	R88M-1M20030	R88M-1M40030
M	Fuji Electric Co., Ltd.	ALPHA7 GYS	GYS201D7-□B2□	GYS401D7-□B2□
		ALPHA7 GYB	GYB201D7-□B2□	GYB401D7-□B2□
F	FANUC CORPORATION	βiS-B	A06B-2115-B1	-
P	Bosch Rexroth AG	MSM	MSM031B	MSM031C
M	Rockwell Automation, Inc.	TLP	TLP-A070-020-DKA□2	TLP-A070-040-DKA□2
	SIEMENS AG	1FK2 *1	1FK2203-2AG0	1FK2203-4AG0

*Contact CKD for mounting other than the above motors and products of other motor manufacturers.
*1 The servo motor is subject to the regulations of Export Trade Control Order Appendix Table 1 Item 7 (8), and is applicable with regard to its specifications. (as of January 2021)

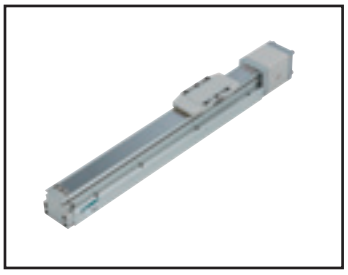

Electric actuator (motorless) Slider

EBS-04LE

Straight motor mounting

● Servo motor size: 50 W

RoHS

How to order

EBS - 04 L E - 06 0300 N NN - M H N N

Ⓐ 04 Body width 44 mm

Ⓑ L None

Ⓒ E Straight mounting

Ⓓ 06 6 mm; 12 12 mm

Ⓔ 0050 to 0500 50 mm (In 50 mm increments) 500 mm

Ⓕ N None

Ⓖ M, Y, P, F Select the mounted motor specification from the table at right.

Ⓗ H 50 W

Ⓘ Origin sensor *1: N None; C Yes

Ⓙ Limit sensor *1: N None; B Yes

*1 Origin sensor and limit sensor are available as a set. As it is both-or-nothing, select "None" for both.

Manufacturer	50 W
Mitsubishi Electric Corporation	M
Delta Electronics Co., Ltd.	M
Sanyo Denki Co., Ltd.	M
YASKAWA Electric Corporation	Y
Keyence Corporation	Y
Panasonic Corporation	P
OMRON Corporation	M
Fuji Electric Co., Ltd.	M
FANUC CORPORATION	F
Bosch Rexroth AG	P
Rockwell Automation, Inc.	M
SIEMENS AG	M

*Refer to page 7 for the motor model No.

Specifications

Applicable motor sizes		50 W servo motor	
Drive method		Ball screw ø10	
Stroke length	mm	50 to 500	
Screw lead	mm	6	12
Max. load capacity *1	kg Horizontal	20	12
	kg Vertical	5	2
Max. speed	mm/s	300	600
Rated thrust *1	N	141	71
Repeatability	mm	±0.01	
Lost motion	mm	0.1 or less	
Static allowable load	N	1030	
Static allowable moment	N·m	MP: 62, MY: 62, MR: 92	
Operating ambient temperature, humidity		0 to 40°C (no freezing) 35 to 80% RH (no condensation)	
Storage ambient temperature, humidity		-10 to 50°C (no freezing) 35 to 80% RH (no condensation)	
Atmosphere		No corrosive gas, explosive gas, or dust	

*1 Rated thrust and max. load capacity are guideline values assuming that the motor mounted will output the rated torque.

Stroke and max. speed

(mm/s)

Screw lead \ Stroke length	50 to 500
6	300
12	600

*Max. speed is when the motor mounted by the customer can output rotation speed of 3000 rpm.
The max. speed is restricted by the stroke. Do not move at speeds beyond the limit.

Allowable overhang length

*Refer to page 34 for details.

Moment direction

MP MY MR

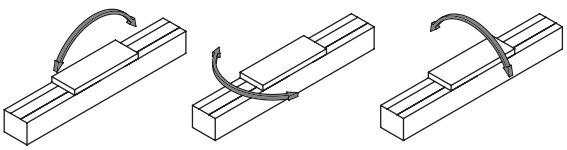

Dimensions Straight motor mounting

● EBS-04LE

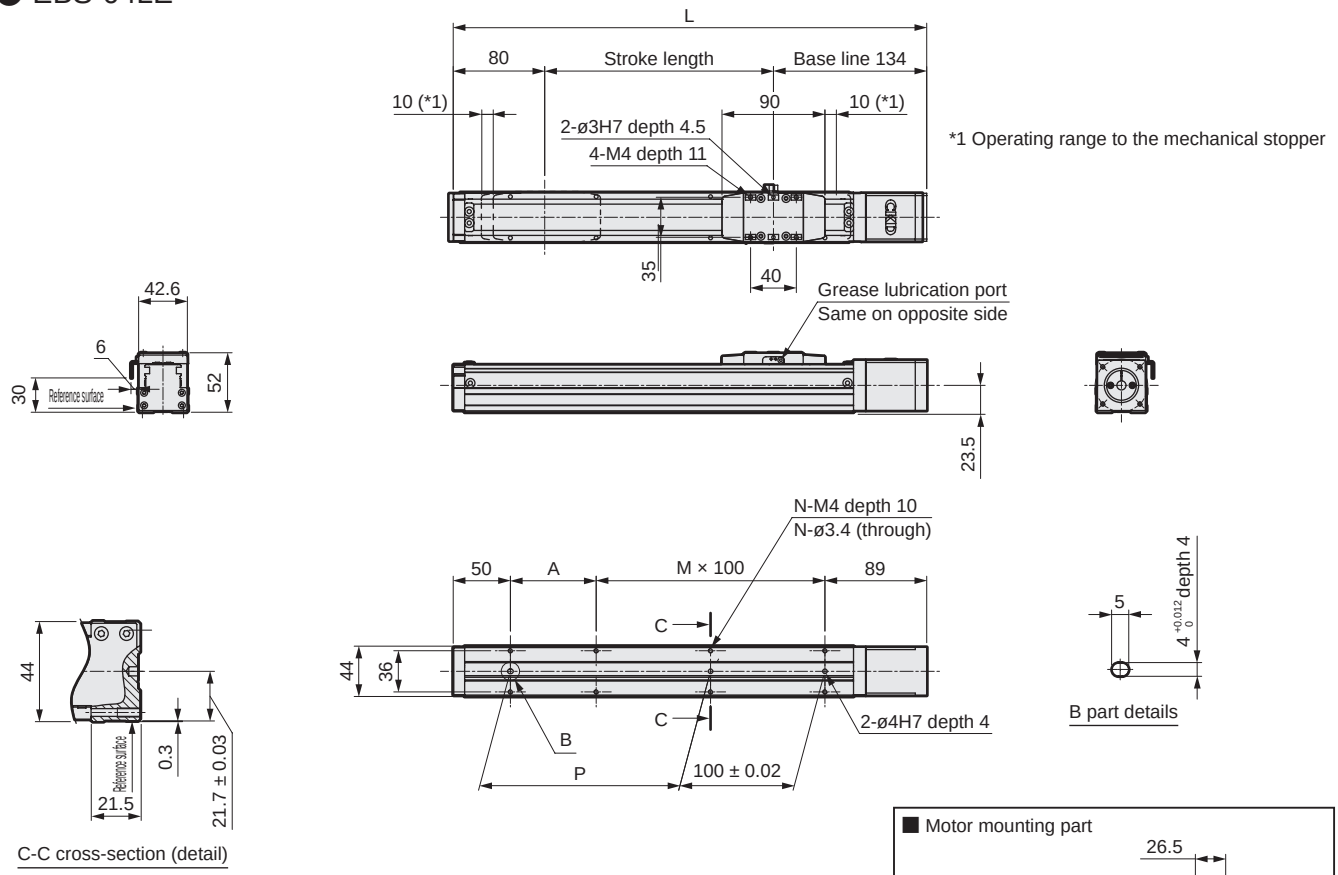

*1 Operating range to the mechanical stopper

■ When origin/limit sensors are mounted

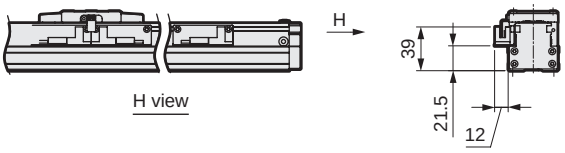

*For stroke of 50 mm,
sensors must be mounted on both sides.
Sensor dogs are also mounted on both sides.

■ Motor mounting part

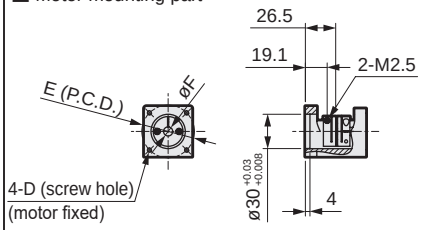

Mounted motor specification	D	E	F	Motor mounting bolt
M 50 W	M4	ø46	ø8	4-M4 × L12
Y 50 W	M4	ø46	ø8	4-M4 × L12
P 50 W	M3	ø45	ø8	4-M3 × L12
F 50 W	M4	ø46	ø8	4-M4 × L12

Stroke code	0050	0100	0150	0200	0250	0300	0350	0400	0450	0500
Stroke length (mm)	50	100	150	200	250	300	350	400	450	500
L	264	314	364	414	464	514	564	614	664	714
A	25	75	25	75	25	75	25	75	25	75
M	1	1	2	2	3	3	4	4	5	5
N	6	6	8	8	10	10	12	12	14	14
P	25	75	125	175	225	275	325	375	425	475
Weight (kg)	1.0	1.1	1.3	1.5	1.7	1.8	2.0	2.2	2.4	2.6

List of attachments

[Motor mounting parts]

Mounted motor specification	Coupling	Motor mounting bolt	
		Size	Quantity
M	Assembled at shipment	M4	4
Y		M4	4
P		M3	4
F		M4	4

[Origin sensor, limit sensor]

Sensor		
Manufacturer	Model	Included quantity
OMRON Corporation	EE-SX674	3

*Refer to page 42 for sensor specifications.

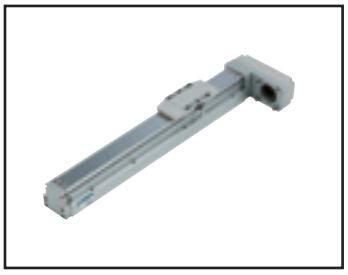

Electric actuator (motorless) Slider

EBS-04L*

Motor side mounting (left, right, bottom)

● Servo motor size: 50 W

RoHS

How to order

EBS - 04 L R - 06 0300 N NN - M H N N

Ⓐ Ⓑ Ⓒ Ⓓ Ⓔ Ⓕ Ⓖ Ⓗ Ⓘ Ⓙ

Ⓐ Body size

04	Body width 44 mm

Ⓑ Motor

L	None

Ⓒ Motor mounting direction

R	Right mounting
D	Bottom mounting
L	Left mounting

Ⓓ Screw lead

06	6 mm
12	12 mm

Ⓔ Stroke length

0050 to 0500	50 mm (In 50 mm increments) 500 mm

Ⓕ Brake

N	None

Ⓖ Mounted motor specification

M Y P F	Select the mounted motor specification from the table at right.

Ⓗ Motor size

H	50 W

Ⓘ Origin sensor *1

N	None
C	Yes

Ⓙ Limit sensor *1

N	None
B	Yes

Manufacturer	50 W
Mitsubishi Electric Corporation	M
Delta Electronics Co., Ltd.	M
Sanyo Denki Co., Ltd.	M
YASKAWA Electric Corporation	Y
Keyence Corporation	Y
Panasonic Corporation	P
OMRON Corporation	M
Fuji Electric Co., Ltd.	M
FANUC CORPORATION	F
Bosch Rexroth AG	P
Rockwell Automation, Inc.	M
SIEMENS AG	M

*Refer to page 7 for the motor model No.

*1 Origin sensor and limit sensor are available as a set. As it is both-or-nothing, select "None" for both.

Specifications

Applicable motor sizes		50 W servo motor	
Drive method		Ball screw ø10	
Stroke length	mm	50 to 500	
Screw lead	mm	6	12
Max. load capacity *1	kg Horizontal	20	12
	kg Vertical	5	2
Max. speed	mm/s	300	600
Rated thrust *1	N	141	71
Repeatability	mm	±0.01	
Lost motion	mm	0.1 or less	
Static allowable load	N	1030	
Static allowable moment	N·m	MP: 62, MY: 62, MR: 92	
Operating ambient temperature, humidity		0 to 40°C (no freezing) 35 to 80% RH (no condensation)	
Storage ambient temperature, humidity		-10 to 50°C (no freezing) 35 to 80% RH (no condensation)	
Atmosphere		No corrosive gas, explosive gas, or dust	

*1 Rated thrust and max. load capacity are guideline values assuming that the motor mounted will output the rated torque.

Stroke and max. speed

(mm/s)

Screw lead \ Stroke length	50 to 600
6	300
12	600

*Max. speed is when the motor mounted by the customer can output rotation speed of 3000 rpm.
The max. speed is restricted by the stroke. Do not move at speeds beyond the limit.

Allowable overhang length

*Refer to page 34 for details.

Moment direction

MP MY MR

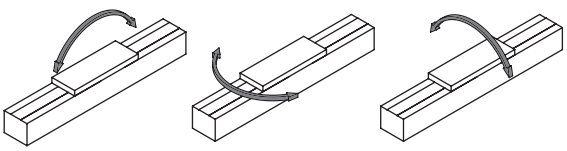

Dimensions Motor right-side mounting

● EBS-04LR

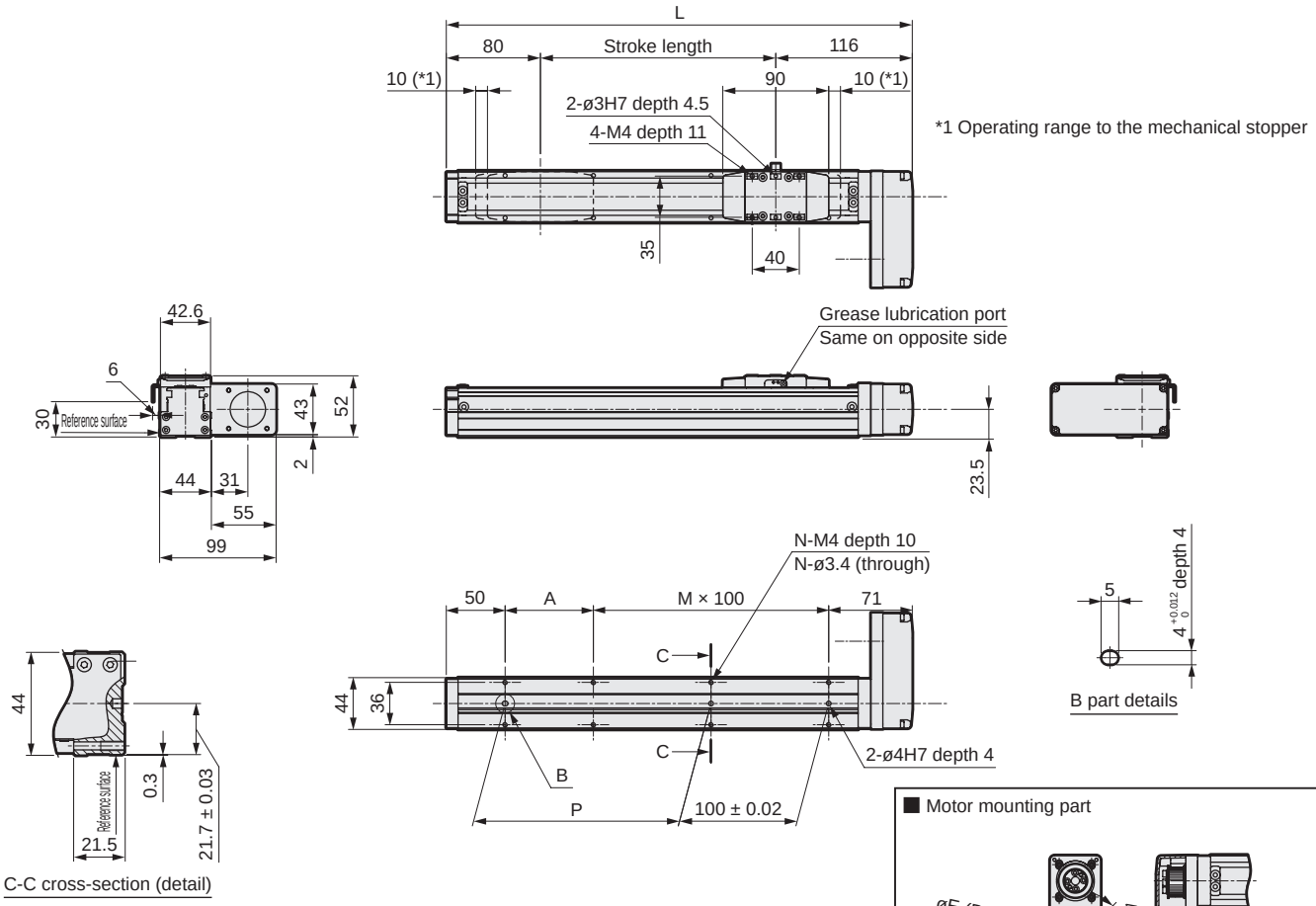

■ When origin/limit sensors are mounted

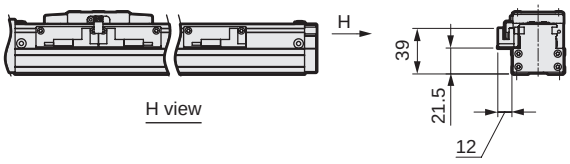

H view

*For stroke of 50 mm,
sensors must be mounted on both sides.
Sensor dogs are also mounted on both sides.

■ Motor mounting part

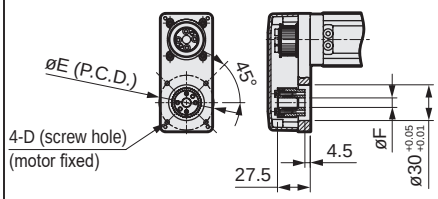

Mounted motor specification	D	E	F	Motor mounting bolt
M 50 W	M4	ø46	ø8	4-M4 × L12
Y 50 W	M4	ø46	ø8	4-M4 × L12
P 50 W	M3	ø45	ø8	4-M3 × L12
F 50 W	M4	ø46	ø8	4-M4 × L12

Stroke code	0050	0100	0150	0200	0250	0300	0350	0400	0450	0500
Stroke length (mm)	50	100	150	200	250	300	350	400	450	500
L	246	296	346	396	446	496	546	596	646	696
A	25	75	25	75	25	75	25	75	25	75
M	1	1	2	2	3	3	4	4	5	5
N	6	6	8	8	10	10	12	12	14	14
P	25	75	125	175	225	275	325	375	425	475
Weight (kg)	1.0	1.2	1.4	1.7	1.8	1.9	2.1	2.3	2.5	2.7

List of attachments

[Motor mounting parts]

Mounted motor specification	Timing belt, pulley	Motor mounting bolt	
		Size	Quantity
M	Included at shipment	M4	4
Y		M4	4
P		M3	4
F		M4	4

[Origin sensor, limit sensor]

Sensor		
Manufacturer	Model	Included quantity
OMRON Corporation	EE-SX674	3

*Refer to page 42 for sensor specifications.

Dimensions Motor bottom mounting

● EBS-04LD

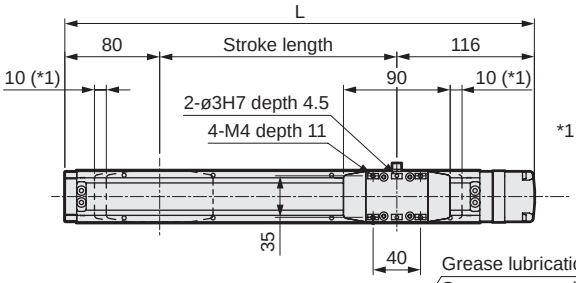

*1 Operating range to the mechanical stopper

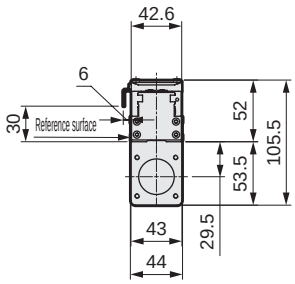

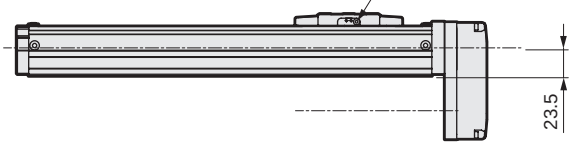

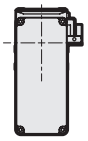

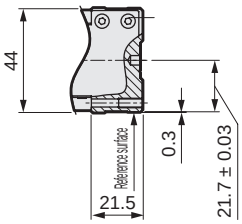

C-C cross-section (detail)

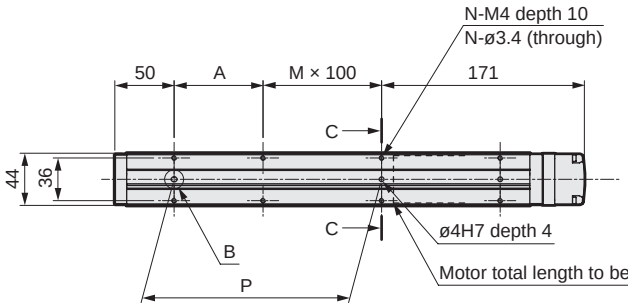

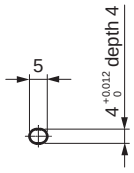

B part details

■ When origin/limit sensors are mounted

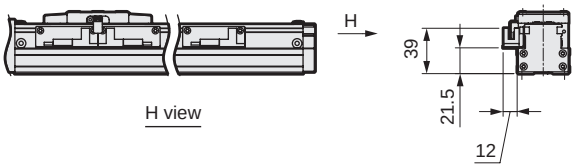

H view

*For stroke of 50 mm,
sensors must be mounted on both sides.
Sensor dogs are also mounted on both sides.

■ Motor mounting part

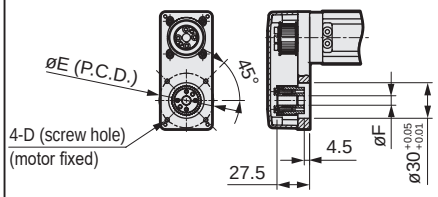

Mounted motor specification	D	E	F	Motor mounting bolt
M 50 W	M4	ø46	ø8	4-M4 × L12
Y 50 W	M4	ø46	ø8	4-M4 × L12
P 50 W	M3	ø45	ø8	4-M3 × L12
F 50 W	M4	ø46	ø8	4-M4 × L12

Stroke code	0050	0100	0150	0200	0250	0300	0350	0400	0450	0500
Stroke length (mm)	50	100	150	200	250	300	350	400	450	500
L	246	296	346	396	446	496	546	596	646	696
A	25	75	25	75	25	75	25	75	25	75
M	0	0	1	1	2	2	3	3	4	4
N	4	4	6	6	8	8	10	10	12	12
P	25	75	125	175	225	275	325	375	425	475
Weight (kg)	1.0	1.2	1.4	1.7	1.8	1.9	2.1	2.3	2.5	2.7

List of attachments

[Motor mounting parts]

Mounted motor specification	Timing belt, pulley	Motor mounting bolt	
		Size	Quantity
M	Included at shipment	M4	4
Y		M4	4
P		M3	4
F		M4	4

[Origin sensor, limit sensor]

Sensor		
Manufacturer	Model	Included quantity
OMRON Corporation	EE-SX674	3

*Refer to page 42 for sensor specifications.

Dimensions Motor left-side mounting

● EBS-04LL

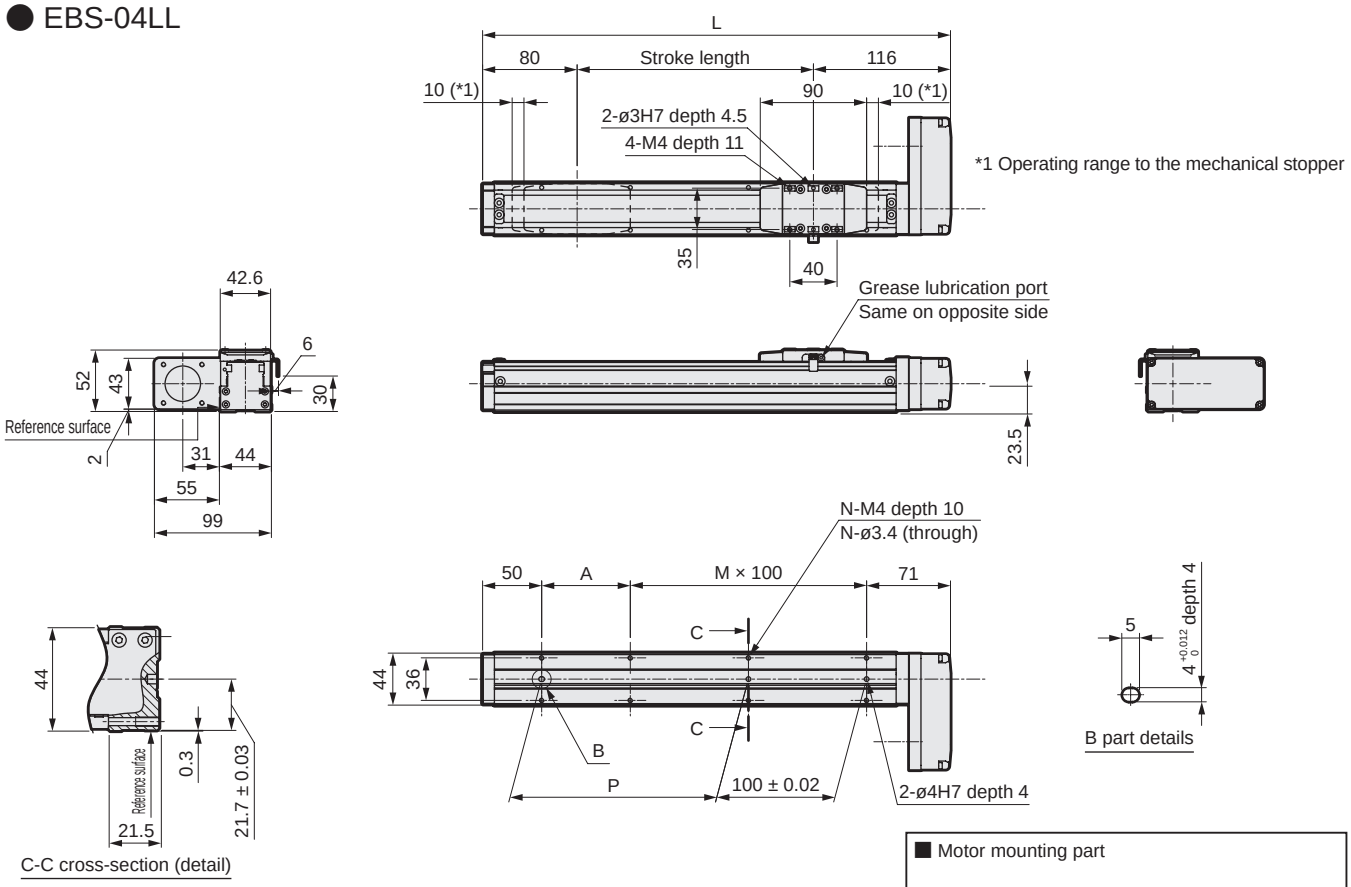

■ When origin/limit sensors are mounted

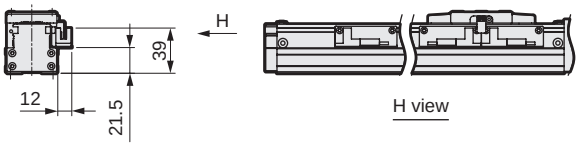

*For stroke of 50 mm,
sensors must be mounted on both sides.
Sensor dogs are also mounted on both sides.

■ Motor mounting part

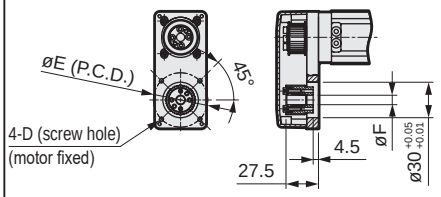

Mounted motor specification	D	E	F	Motor mounting bolt
M 50 W	M4	ø46	ø8	4-M4 × L12
Y 50 W	M4	ø46	ø8	4-M4 × L12
P 50 W	M3	ø45	ø8	4-M3 × L12
F 50 W	M4	ø46	ø8	4-M4 × L12

Stroke code	0050	0100	0150	0200	0250	0300	0350	0400	0450	0500
Stroke length (mm)	50	100	150	200	250	300	350	400	450	500
L	246	296	346	396	446	496	546	596	646	696
A	25	75	25	75	25	75	25	75	25	75
M	1	1	2	2	3	3	4	4	5	5
N	6	6	8	8	10	10	12	12	14	14
P	25	75	125	175	225	275	325	375	425	475
Weight (kg)	1.0	1.2	1.4	1.7	1.8	1.9	2.1	2.3	2.5	2.7

List of attachments

[Motor mounting parts]

Mounted motor specification	Timing belt, pulley	Motor mounting bolt	
		Size	Quantity
M	Included at shipment	M4	4
Y		M4	4
P		M3	4
F		M4	4

[Origin sensor, limit sensor]

Sensor		
Manufacturer	Model	Included quantity
OMRON Corporation	EE-SX674	3

*Refer to page 42 for sensor specifications.

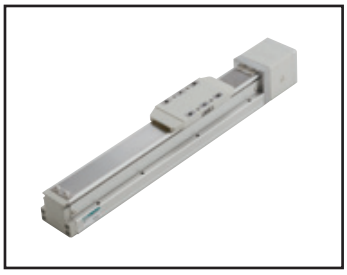

Electric actuator (motorless) Slider

EBS-05LE

Straight motor mounting

● Servo motor size: 100 W

RoHS

How to order

EBS - 05 L E - 02 0300 N NN - M 1 N N

Ⓐ Ⓑ Ⓒ Ⓓ Ⓔ Ⓕ Ⓖ Ⓗ Ⓘ Ⓙ

Ⓐ Body size

05	Body width 54 mm

Ⓑ Motor

L	None

Ⓒ Motor mounting direction

E	Straight mounting

Ⓓ Screw lead

02	2 mm
05	5 mm
10	10 mm
20	20 mm

Ⓔ Stroke length

0050 to 0800	50 mm (In 50 mm increments) 800 mm

Ⓕ Brake

N	None

Ⓖ Mounted motor specification

M	Select the mounted motor specification from the table at right.
Y	
P	
F	

Ⓗ Motor size

1	100 W

Ⓘ Origin sensor *1

N	None
C	Yes

Ⓙ Limit sensor *1

N	None
B	Yes

Manufacturer	100 W
Mitsubishi Electric Corporation	M
Delta Electronics Co., Ltd.	M
Sanyo Denki Co., Ltd.	M
YASKAWA Electric Corporation	Y
Keyence Corporation	Y
Panasonic Corporation	P
OMRON Corporation	M
Fuji Electric Co., Ltd.	M
FANUC CORPORATION	F
Bosch Rexroth AG	P
Rockwell Automation, Inc.	M
SIEMENS AG	M

*1 Origin sensor and limit sensor are available as a set. As it is both-or-nothing, select "None" for both.

*Refer to page 7 for the motor model No.

Specifications

Applicable motor sizes		100 W servo motor			
Drive method		Ball screw ø12			
Stroke length	mm	50 to 800			
Screw lead	mm	2	5	10	20
Max. load capacity kg *1	Horizontal	30	30	15	10
	Vertical	10	10	5	2.5
Max. speed	mm/s	100	250	500	1000
Rated thrust *1	N	854	341	170	85
Repeatability	mm	±0.01			
Lost motion	mm	0.1 or less			
Static allowable load	N	1168			
Static allowable moment	N·m	MP: 103, MY: 103, MR: 144			
Operating ambient temperature, humidity		0 to 40°C (no freezing) 35 to 80% RH (no condensation)			
Storage ambient temperature, humidity		-10 to 50°C (no freezing) 35 to 80% RH (no condensation)			
Atmosphere		No corrosive gas, explosive gas, or dust			

*1 Rated thrust and max. load capacity are guideline values assuming that the motor mounted will output the rated torque.

Stroke and max. speed

(mm/s)

Stroke length / Screw lead	50 to 600	650	700	750	800
2	100	90	80	70	60
5	250	225	200	175	150
10	500	450	400	350	300
20	1000	900	800	700	600

*Max. speed is when the motor mounted by the customer can output rotation speed of 3000 rpm.
The max. speed is restricted by the stroke. Do not move at speeds beyond the limit.

Allowable overhang length

*Refer to page 34 for details.

Moment direction

MP MY MR

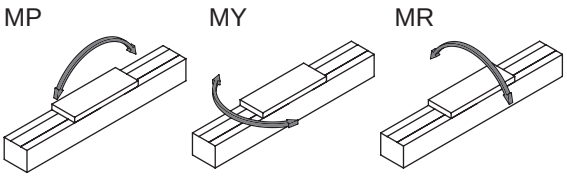

Dimensions Straight motor mounting

● EBS-05LE

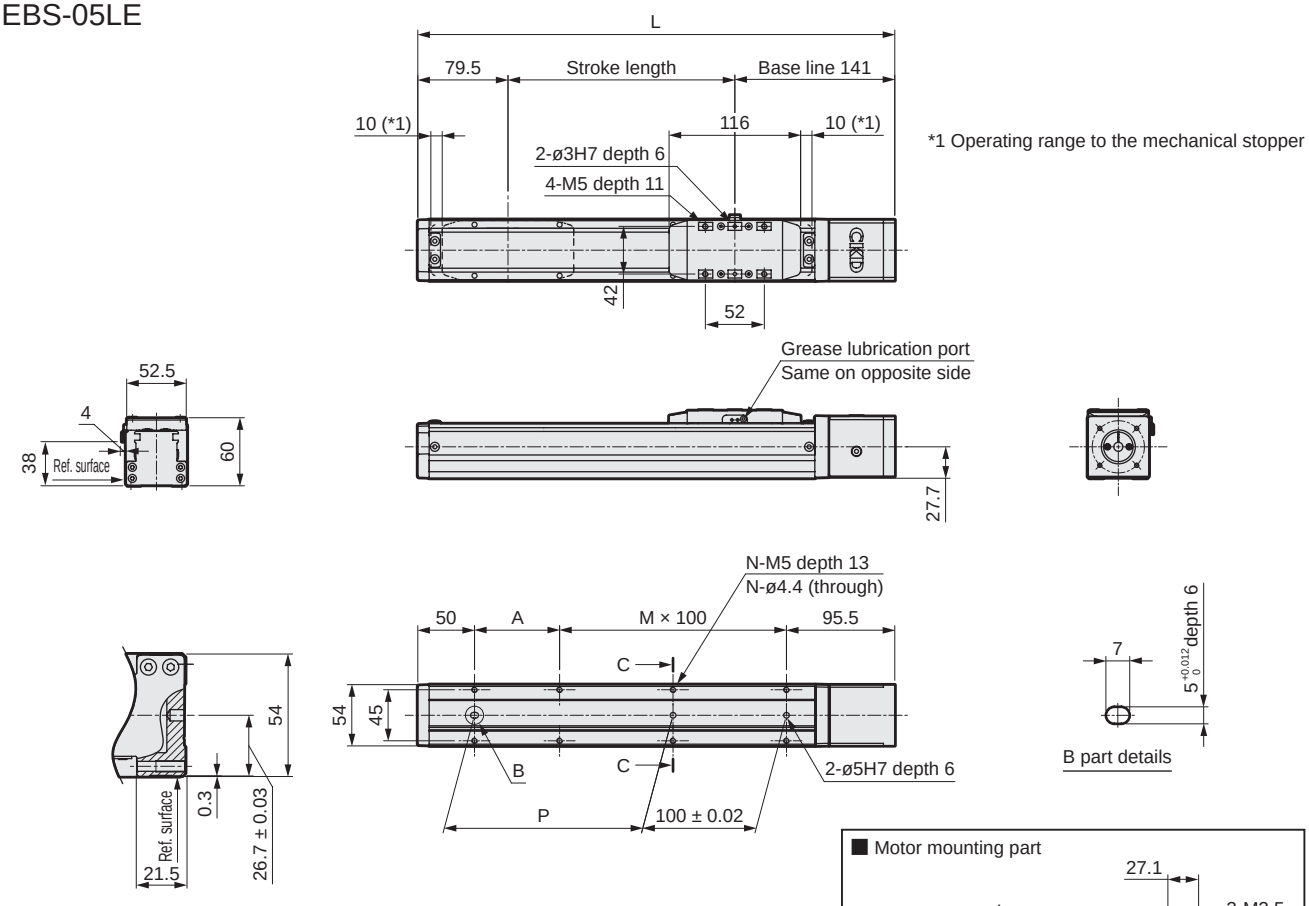

Mounted motor specification	D	E	F	Motor mounting bolt
M 100 W	M4	ø46	ø8	4-M4 × L12
Y 100 W	M4	ø46	ø8	4-M4 × L12
P 100 W	M3	ø45	ø8	4-M3 × L12
F 100 W	M4	ø46	ø8	4-M4 × L12

Stroke code	0050	0100	0150	0200	0250	0300	0350	0400	0450	0500	0550	0600	0650	0700	0750	0800
Stroke length (mm)	50	100	150	200	250	300	350	400	450	500	550	600	650	700	750	800
L	270.5	320.5	370.5	420.5	470.5	520.5	570.5	620.5	670.5	720.5	770.5	820.5	870.5	920.5	970.5	1020.5
A	25	75	25	75	25	75	25	75	25	75	25	75	25	75	25	75
M	1	1	2	2	3	3	4	4	5	5	6	6	7	7	8	8
N	6	6	8	8	10	10	12	12	14	14	16	16	18	18	20	20
P	25	75	125	175	225	275	325	375	425	475	525	575	625	675	725	775
Weight (kg)	1.8	1.9	2.1	2.2	2.4	2.5	2.7	2.8	3.0	3.1	3.2	3.4	3.5	3.7	3.8	4.0

List of attachments

[Motor mounting parts]

Mounted motor specification	Coupling	Motor mounting bolt	
		Size	Quantity
M	Assembled at shipment	M4	4
Y		M4	4
P		M3	4
F		M4	4

[Origin sensor, limit sensor]

Manufacturer	Model	Included quantity
OMRON Corporation	EE-SX674	3

*Refer to page 42 for sensor specifications.

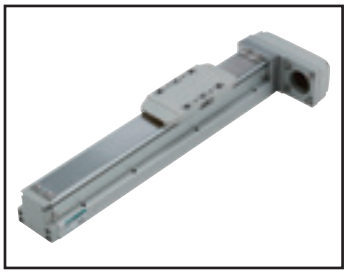

Electric actuator (motorless) Slider

EBS-05L*

Motor side mounting (left, right, bottom)

● Servo motor size: 100 W

RoHS

How to order

EBS - 05 L R - 02 0300 N NN - M 1 N N

Ⓐ 05 Body width 54 mm

Ⓑ L None

Ⓒ R Right mounting; D Bottom mounting; L Left mounting

Ⓓ 02 2 mm; 05 5 mm; 10 10 mm; 20 20 mm

Ⓔ 0050 to 0800 50 mm (In 50 mm increments) 800 mm

Ⓕ N None

Ⓖ M, Y, P, F — Select the mounted motor specification from the table at right.

Ⓗ 1 100 W

Ⓘ N None; C Yes

Ⓙ N None; B Yes

*1 Origin sensor and limit sensor are available as a set. As it is both-or-nothing, select "None" for both.

Manufacturer	100 W
Mitsubishi Electric Corporation	M
Delta Electronics Co., Ltd.	M
Sanyo Denki Co., Ltd.	M
YASKAWA Electric Corporation	Y
Keyence Corporation	Y
Panasonic Corporation	P
OMRON Corporation	M
Fuji Electric Co., Ltd.	M
FANUC CORPORATION	F
Bosch Rexroth AG	P
Rockwell Automation, Inc.	M
SIEMENS AG	M

*Refer to page 7 for the motor model No.

Specifications

Applicable motor sizes		100 W servo motor			
Drive method		Ball screw ø12			
Stroke length	mm	50 to 800			
Screw lead		2	5	10	20
Max. load capacity	kg Horizontal	30	30	15	10
	kg Vertical	10	10	5	2.5
Max. speed	mm/s	100	250	500	1000
Rated thrust *1	N	854	341	170	85
Repeatability	mm	±0.01			
Lost motion	mm	0.1 or less			
Static allowable load	N	1168			
Static allowable moment	N·m	MP: 103, MY: 103, MR: 144			
Operating ambient temperature, humidity		0 to 40°C (no freezing) 35 to 80% RH (no condensation)			
Storage ambient temperature, humidity		-10 to 50°C (no freezing) 35 to 80% RH (no condensation)			
Atmosphere		No corrosive gas, explosive gas, or dust			

*1 Rated thrust and max. load capacity are guideline values assuming that the motor mounted will output the rated torque.

Stroke and max. speed

(mm/s)

Lead \ Stroke length	50 to 600	650	700	750	800
2	100	90	80	70	60
5	250	225	200	175	150
10	500	450	400	350	300
20	1000	900	800	700	600

*Max. speed is when the motor mounted by the customer can output rotation speed of 3000 rpm.
The max. speed is restricted by the stroke. Do not move at speeds beyond the limit.

Allowable overhang length

*Refer to page 34 for details.

Moment direction

MP MY MR

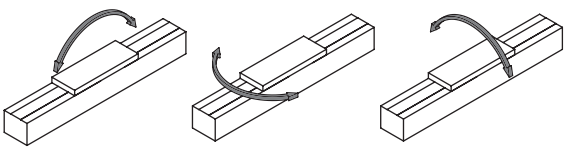

Dimensions Motor right-side mounting

● EBS-05LR

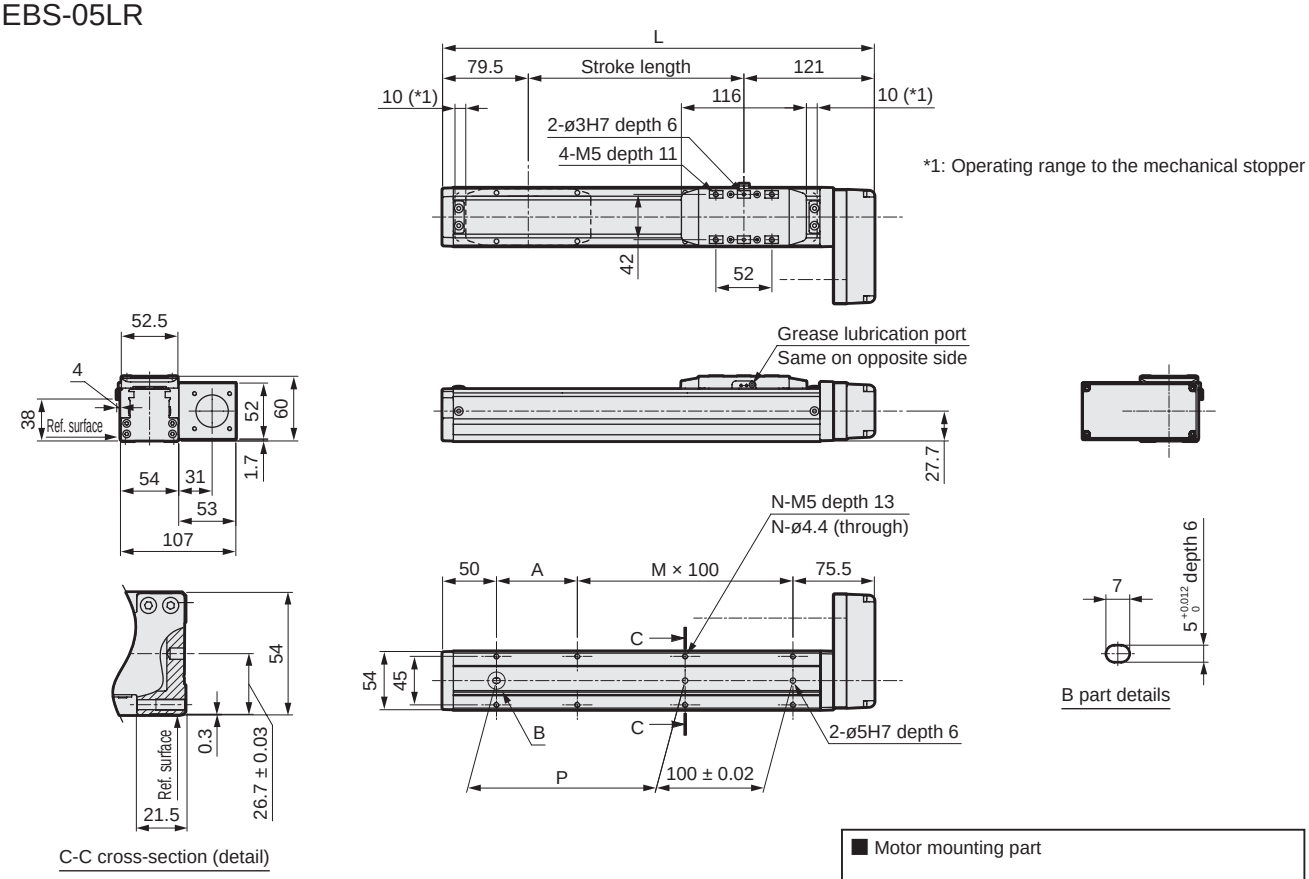

■ When origin/limit sensors are mounted

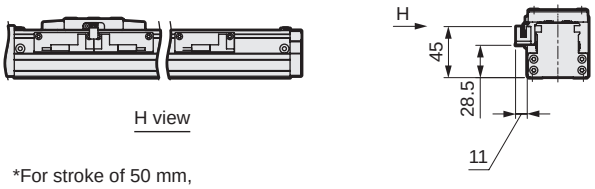

H view

*For stroke of 50 mm,
sensors must be mounted on both sides.
Sensor dogs are also mounted on both sides.

■ Motor mounting part

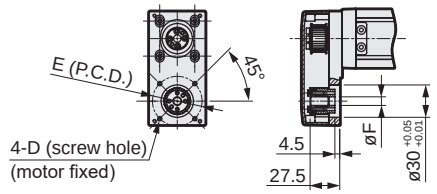

Mounted motor specification	D	E	F	Motor screw
M 100 W	M4	ø46	ø8	4-M4 × L12
Y 100 W	M4	ø46	ø8	4-M4 × L12
P 100 W	M3	ø45	ø8	4-M3 × L12
F 100 W	M4	ø46	ø8	4-M4 × L12

Stroke code	0050	0100	0150	0200	0250	0300	0350	0400	0450	0500	0550	0600	0650	0700	0750	0800
Stroke length (mm)	50	100	150	200	250	300	350	400	450	500	550	600	650	700	750	800
L	250.5	300.5	350.5	400.5	450.5	500.5	550.5	600.5	650.5	700.5	750.5	800.5	850.5	900.5	950.5	1000.5
A	25	75	25	75	25	75	25	75	25	75	25	75	25	75	25	75
M	1	1	2	2	3	3	4	4	5	5	6	6	7	7	8	8
N	6	6	8	8	10	10	12	12	14	14	16	16	18	18	20	20
P	25	75	125	175	225	275	325	375	425	475	525	575	625	675	725	775
Weight (kg)	1.8	2.0	2.1	2.2	2.4	2.5	2.7	2.8	3.0	3.1	3.3	3.4	3.5	3.7	3.8	4.0

List of attachments

[Motor mounting]

Mounted motor specification	Timing belt, pulley	Motor mounting bolt	
		Size	Included quantity
M	Included at shipment	M4	4
Y		M4	4
P		M3	4
F		M4	4

[When origin/limit sensors are selected]

Sensor		
Manufacturer	Model	Included quantity
OMRON Corporation	EE-SX674	3

*Refer to page 42 for sensor specifications.

Dimensions Motor bottom mounting

● EBS-05LD

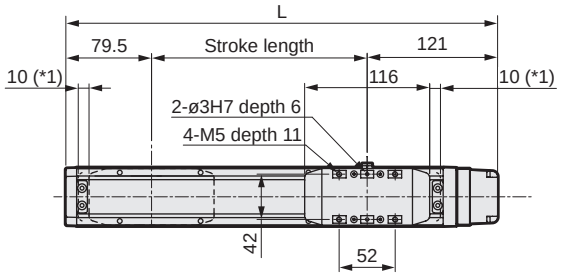

*1: Operating range to the mechanical stopper

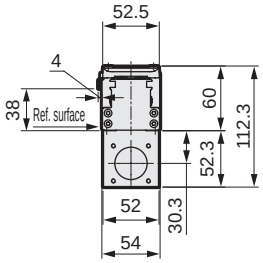

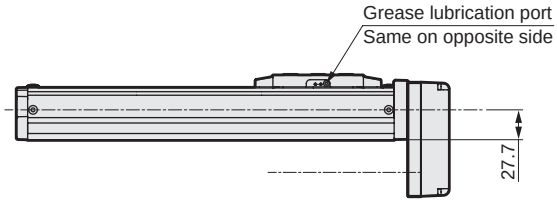

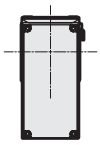

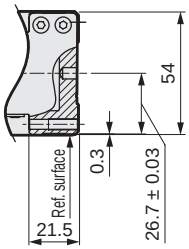

C-C cross-section (detail)

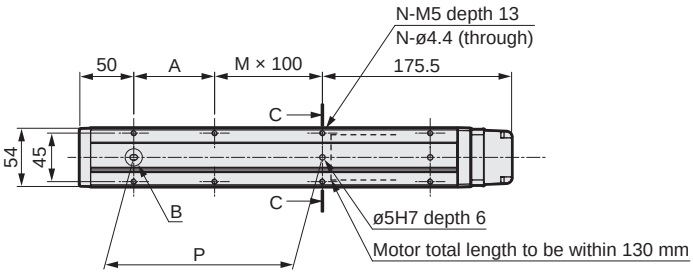

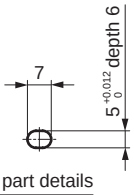

B part details

■ Motor mounting part

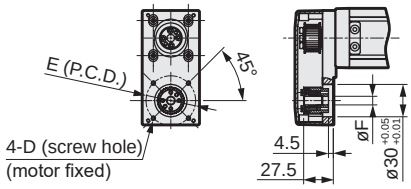

Mounted motor specification	D	E	F	Motor screw
M 100 W	M4	ø46	ø8	4-M4 × L12
Y 100 W	M4	ø46	ø8	4-M4 × L12
P 100 W	M3	ø45	ø8	4-M3 × L12
F 100 W	M4	ø46	ø8	4-M4 × L12

■ When origin/limit sensors are mounted



H view

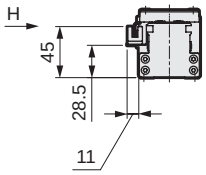

*For stroke of 50 mm,
sensors must be mounted on both sides.
Sensor dogs are also mounted on both sides.

Stroke code	0050	0100	0150	0200	0250	0300	0350	0400	0450	0500	0550	0600	0650	0700	0750	0800
Stroke length (mm)	50	100	150	200	250	300	350	400	450	500	550	600	650	700	750	800
L	250.5	300.5	350.5	400.5	450.5	500.5	550.5	600.5	650.5	700.5	750.5	800.5	850.5	900.5	950.5	1000.5
A	25	75	25	75	25	75	25	75	25	75	25	75	25	75	25	75
M	0	0	1	1	2	2	3	3	4	4	5	5	6	6	7	7
N	4	4	6	6	8	8	10	10	12	12	14	14	16	16	18	18
P	25	75	125	175	225	275	325	375	425	475	525	575	625	675	725	775
Weight (kg)	1.8	2.0	2.1	2.2	2.4	2.5	2.7	2.8	3.0	3.1	3.3	3.4	3.5	3.7	3.8	4.0

List of attachments

[Motor mounting]

Mounted motor specification	Timing belt, pulley	Motor mounting bolt	
		Size	Included quantity
M	Included at shipment	M4	4
Y		M4	4
P		M3	4
F		M4	4

[When origin/limit sensors are selected]

Sensor		
Manufacturer	Model	Included quantity
OMRON Corporation	EE-SX674	3

*Refer to page 42 for sensor specifications.

Dimensions Motor left-side mounting

● EBS-05LL

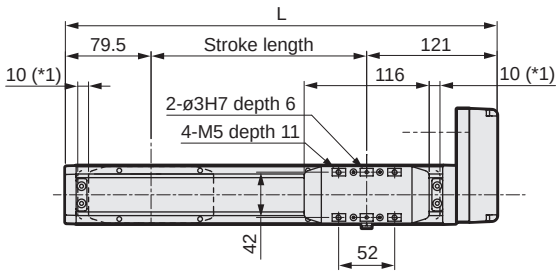

*1: Operating range to the mechanical stopper

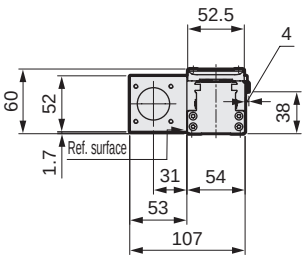

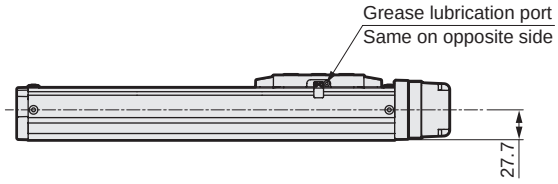

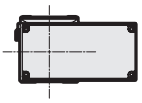

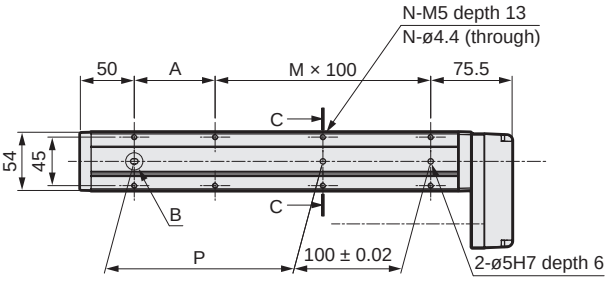

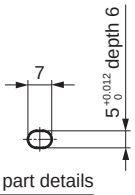

B part details

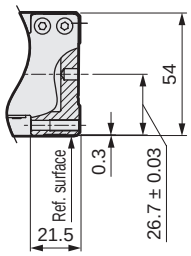

C-C cross-section (detail)

■ When origin/limit sensors are mounted

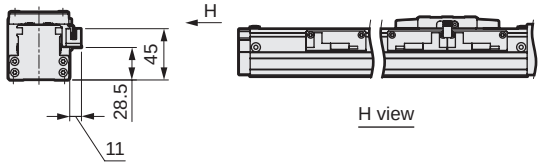

H view

*For stroke of 50 mm,
sensors must be mounted on both sides.
Sensor dogs are also mounted on both sides.

■ Motor mounting part

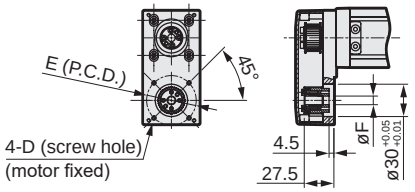

Mounted motor specification	D	E	F	Motor screw
M 100 W	M4	ø46	ø8	4-M4 × L12
Y 100 W	M4	ø46	ø8	4-M4 × L12
P 100 W	M3	ø45	ø8	4-M3 × L12
F 100 W	M4	ø46	ø8	4-M4 × L12

Stroke code	0050	0100	0150	0200	0250	0300	0350	0400	0450	0500	0550	0600	0650	0700	0750	0800
Stroke length (mm)	50	100	150	200	250	300	350	400	450	500	550	600	650	700	750	800
L	250.5	300.5	350.5	400.5	450.5	500.5	550.5	600.5	650.5	700.5	750.5	800.5	850.5	900.5	950.5	1000.5
A	25	75	25	75	25	75	25	75	25	75	25	75	25	75	25	75
M	1	1	2	2	3	3	4	4	5	5	6	6	7	7	8	8
N	6	6	8	8	10	10	12	12	14	14	16	16	18	18	20	20
P	25	75	125	175	225	275	325	375	425	475	525	575	625	675	725	775
Weight (kg)	1.8	2.0	2.1	2.2	2.4	2.5	2.7	2.8	3.0	3.1	3.3	3.4	3.5	3.7	3.8	4.0

List of attachments

[Motor mounting]

Mounted motor specification	Timing belt, pulley	Motor mounting bolt	
		Size	Included quantity
M	Included at shipment	M4	4
Y		M4	4
P		M3	4
F		M4	4

[When origin/limit sensors are selected]

Sensor		
Manufacturer	Model	Included quantity
OMRON Corporation	EE-SX674	3

*Refer to page 42 for sensor specifications.

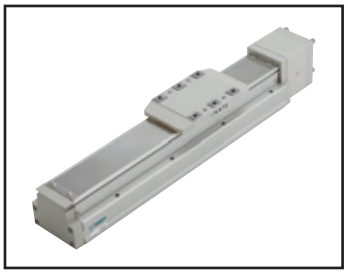

Electric actuator (motorless) Slider

EBS-08LE

Straight motor mounting

● Servo motor size: 200 W

RoHS

How to order

EBS - 08 L E - 05 0300 N NN - M 2 N N

Ⓐ 08 Ⓑ L Ⓒ E Ⓓ 05 Ⓔ 0300 Ⓕ N NN Ⓖ M Ⓗ 2 Ⓘ N Ⓙ N

Ⓐ Body size

08	Body width 82 mm

Ⓑ Motor

L	None

Ⓒ Motor mounting direction

E	Straight mounting

Ⓓ Screw lead

05	5 mm
10	10 mm
20	20 mm

Ⓔ Stroke length

0050 to 1100	50 mm (In 50 mm increments) 1100 mm

Ⓕ Brake

N	None

Ⓖ Mounted motor specification

M Y P F	Select the mounted motor specification from the table at right.

Ⓗ Motor size

2	200 W

Ⓘ Origin sensor *1

N	None
C	Yes

Ⓙ Limit sensor *1

N	None
B	Yes

Manufacturer	200 W
Mitsubishi Electric Corporation	M
Delta Electronics Co., Ltd.	M
Sanyo Denki Co., Ltd.	M
YASKAWA Electric Corporation	Y
Keyence Corporation	Y
Panasonic Corporation	P
OMRON Corporation	P
Fuji Electric Co., Ltd.	M
FANUC CORPORATION	F
Bosch Rexroth AG	P
Rockwell Automation, Inc.	M
SIEMENS AG	M

*Refer to page 7 for the motor model No.

*1 Origin sensor and limit sensor are available as a set. As it is both-or-nothing, select "None" for both.

Specifications

Applicable motor sizes		200 W servo motor		
Drive method		Ball screw ø16		
Stroke length	mm	50 to 1100		
Screw lead	mm	5	10	20
Max. load capacity *1	Horizontal	50	30	12
	Vertical	15	8	2.5
Max. speed	mm/s	250	500	1000
Rated thrust *1	N	683	341	174
Repeatability	mm	±0.01		
Lost motion	mm	0.1 or less		
Static allowable load	N	2781		
Static allowable moment	N·m	MP: 203, MY: 203, MR: 336		
Operating ambient temperature, humidity		0 to 40°C (no freezing) 35 to 80% RH (no condensation)		
Storage ambient temperature, humidity		-10 to 50°C (no freezing) 35 to 80% RH (no condensation)		
Atmosphere		No corrosive gas, explosive gas, or dust		

*1 Rated thrust and max. load capacity are guideline values assuming that the motor mounted will output the rated torque.

Stroke and max. speed

(mm/s)

Screw lead \ Stroke length	50 to 700	750	800	850	900	950	1000	1050	1100
5	250	225	200	175	150	125	100	75	50
10	500	450	400	350	300	250	200	150	100
20	1000	900	800	700	600	500	400	300	200

*Max. speed is when the motor mounted by the customer can output rotation speed of 3000 rpm.
The max. speed is restricted by the stroke. Do not move at speeds beyond the limit.

Allowable overhang length

*Refer to page 34 for details.

Moment direction

MP MY MR

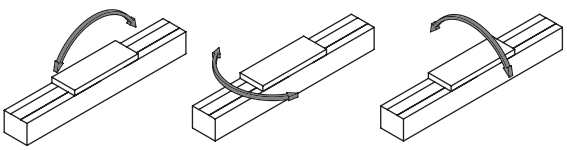

Dimensions Straight motor mounting

● EBS-08LE

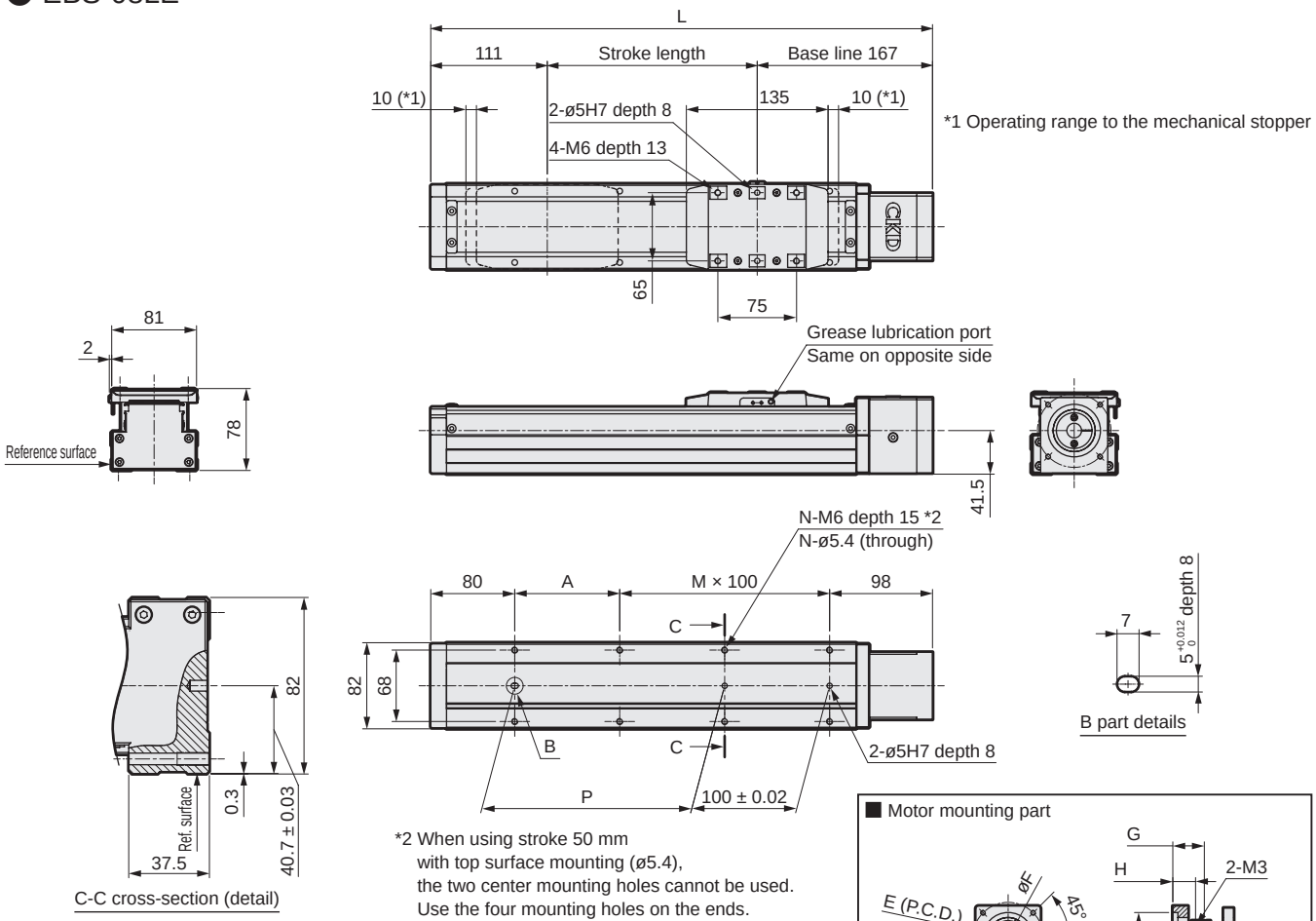

*2 When using stroke 50 mm
with top surface mounting (ø5.4),
the two center mounting holes cannot be used.
Use the four mounting holes on the ends.

■ Motor mounting part

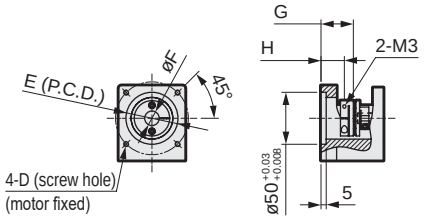

Mounted motor specification	D	E	F	G	H	Motor mounting bolt
M 200 W	M5	ø70	ø14	31.1	22.5	4-M5 × L18
Y 200 W	M5	ø70	ø14	31.1	22.5	4-M5 × L18
P 200 W	M4	ø70	ø11	31.1	22.5	4-M4 × L18
F 200 W	M5	ø70	ø9	29.1	20.5	4-M5 × L16

■ When origin/limit sensors are mounted

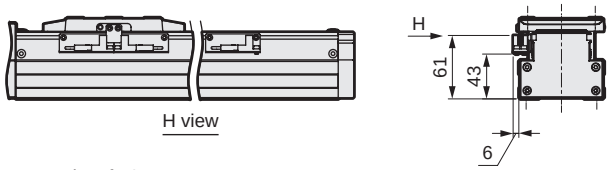

*For stroke of 50 mm,
sensors must be mounted on both sides.
Sensor dogs are also mounted on both sides.

Stroke code	0050	0100	0150	0200	0250	0300	0350	0400	0450	0500	0550	0600	0650	0700	0750	0800	0850	0900	0950	1000	1050	1100
Stroke length (mm)	50	100	150	200	250	300	350	400	450	500	550	600	650	700	750	800	850	900	950	1000	1050	1100
L	328	378	428	478	528	578	628	678	728	778	828	878	928	978	1028	1078	1128	1178	1228	1278	1328	1378
A	50	100	50	100	50	100	50	100	50	100	50	100	50	100	50	100	50	100	50	100	50	100
M	1	1	2	2	3	3	4	4	5	5	6	6	7	7	8	8	9	9	10	10	11	11
N	6	6	8	8	10	10	12	12	14	14	16	16	18	18	20	20	22	22	24	24	26	26
P	50	100	150	200	250	300	350	400	450	500	550	600	650	700	750	800	850	900	950	1000	1050	1100
Weight (kg)	4.3	4.6	4.9	5.2	5.6	5.9	6.2	6.6	6.9	7.2	7.5	7.9	8.2	8.5	8.8	9.2	9.5	9.8	10.2	10.5	10.8	11.1

List of attachments

[Motor mounting parts]

Mounted motor specification	Coupling	Motor mounting bolt	
		Size	Quantity
M	Assembled at shipment	M5	4
Y		M5	4
P		M4	4
F		M5	4

[Origin sensor, limit sensor]

Manufacturer	Model	Included quantity
OMRON Corporation	EE-SX674	3

*Refer to page 42 for sensor specifications.

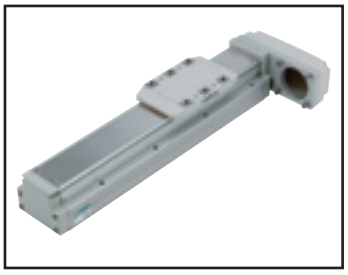

Electric actuator (motorless) Slider

EBS-08L*

Motor side mounting (left, right, bottom)

● Servo motor size: 200 W

RoHS

How to order

EBS - 08 L E - 05 0300 N NN - M 2 N N

(A) (B) (C) (D) (E) (F) (G) (H) (I) (J)

(A) Body size

08	Body width 82 mm

(B) Motor

L	None

(C) Motor mounting direction

R	Right mounting
D	Bottom mounting
L	Left mounting

(D) Screw lead

05	5 mm
10	10 mm
20	20 mm

(E) Stroke length

0050 to 1100	50 mm (In 50 mm increments) 1100 mm

(F) Brake

N	None

(G) Mounted motor specification

M	Select the mounted motor specification from the table at right.
Y	
P	
F	

(H) Motor size

2	200 W

(I) Origin sensor *1

N	None
C	Yes

(J) Limit sensor *1

N	None
B	Yes

Manufacturer	200 W
Mitsubishi Electric Corporation	M
Delta Electronics Co., Ltd.	M
Sanyo Denki Co., Ltd.	M
YASKAWA Electric Corporation	Y
Keyence Corporation	Y
Panasonic Corporation	P
OMRON Corporation	P
Fuji Electric Co., Ltd.	M
FANUC CORPORATION	F
Bosch Rexroth AG	P
Rockwell Automation, Inc.	M
SIEMENS AG	M

*Refer to page 7 for the motor model No.

*1 Origin sensor and limit sensor are available as a set. As it is both-or-nothing, select "None" for both.

Specifications

Applicable motor sizes		200 W servo motor		
Drive method		Ball screw ø16		
Stroke length	mm	50 to 1100		
Screw lead		5	10	20
Max. load capacity	kg Horizontal	50	30	12
	kg Vertical	15	8	2.5
Max. speed	mm/s	250	500	1000
Rated thrust	N	683	341	174
Repeatability	mm	±0.01		
Lost motion	mm	0.1 or less		
Static allowable load	N	2781		
Static allowable moment	N·m	MP: 203, MY: 203, MR: 336		
Operating ambient temperature, humidity		0 to 40°C (no freezing) 35 to 80% RH (no condensation)		
Storage ambient temperature, humidity		-10 to 50°C (no freezing) 35 to 80% RH (no condensation)		
Atmosphere		No corrosive gas, explosive gas, or dust		

*1 Rated thrust and max. load capacity are guideline values assuming that the motor mounted will output the rated torque.

Stroke and max. speed

(mm/s)

Lead \ Stroke length	50 to 700	750	800	850	900	950	1000	1050	1100
5	250	225	200	175	150	125	100	75	50
10	500	450	400	350	300	250	200	150	100
20	1000	900	800	700	600	500	400	300	200

*Max. speed is when the motor mounted by the customer can output rotation speed of 3000 rpm.
The max. speed is restricted by the stroke. Do not move at speeds beyond the limit.

Allowable overhang length

*Refer to page 34 for details.

Moment direction

MP MY MR

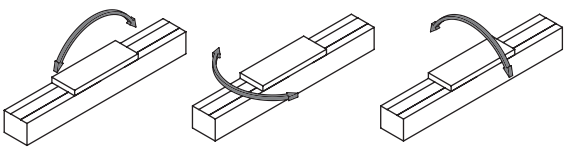

Dimensions Motor right-side mounting

● EBS-08LR

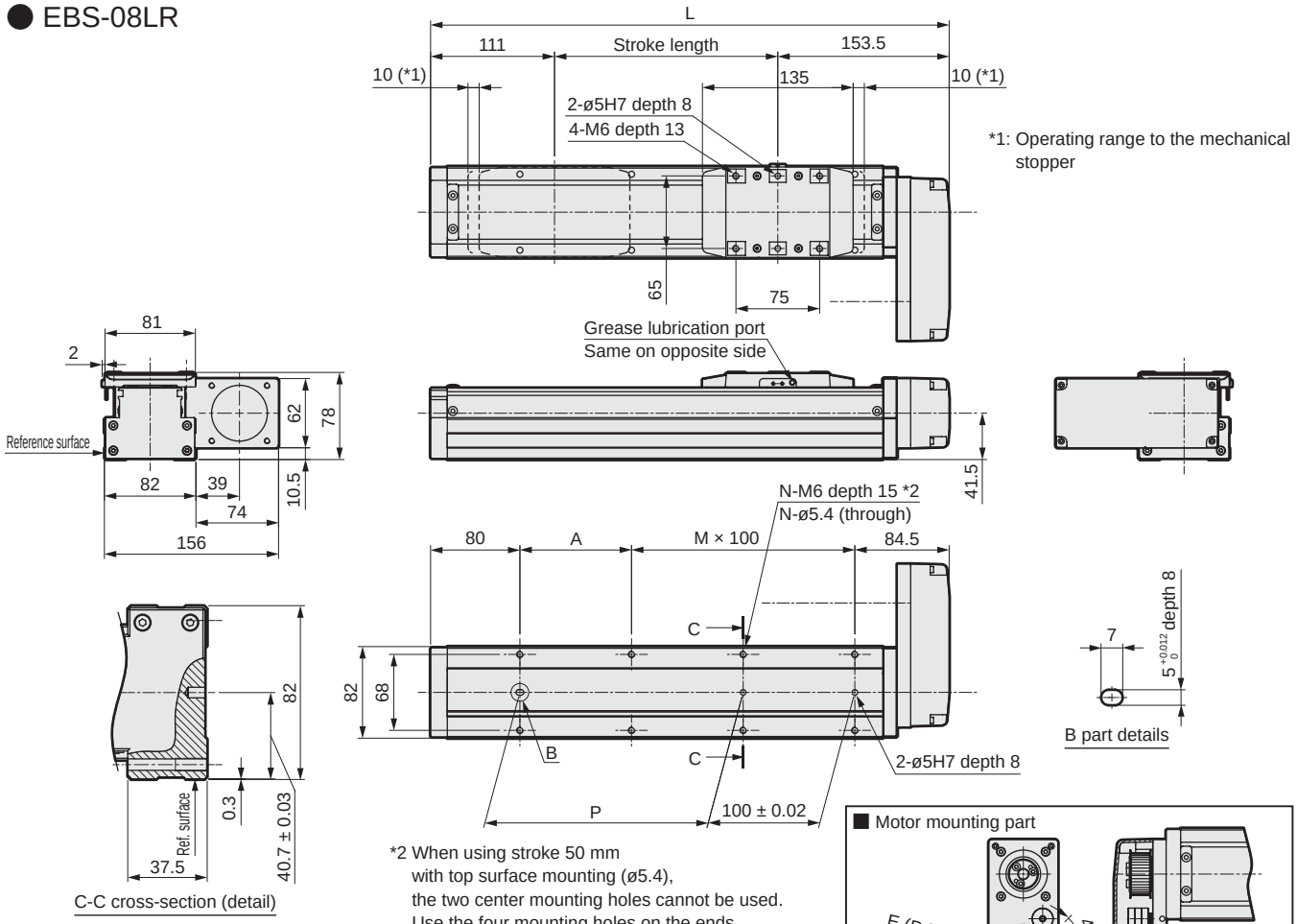

*2 When using stroke 50 mm with top surface mounting (ø5.4), the two center mounting holes cannot be used. Use the four mounting holes on the ends.

■ Motor mounting part

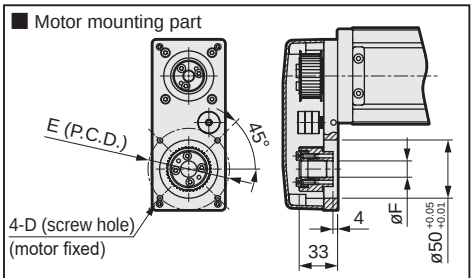

Mounted motor specification	D	E	F	Motor screw
M 200 W	M5	ø70	ø14	4-M5 × L18
Y 200 W	M5	ø70	ø14	4-M5 × L18
P 200 W	M4	ø70	ø11	4-M4 × L18
F 200 W	M5	ø70	ø9	4-M5 × L16

■ When origin/limit sensors are mounted

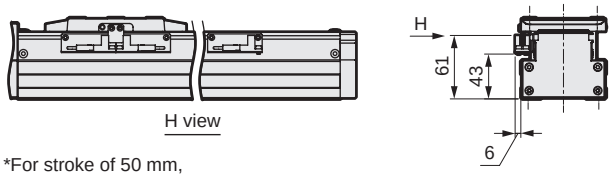

*For stroke of 50 mm, sensors must be mounted on both sides. Sensor dogs are also mounted on both sides.

Stroke code	0050	0100	0150	0200	0250	0300	0350	0400	0450	0500	0550	0600	0650	0700	0750	0800	0850	0900	0950	1000	1050	1100
Stroke length (mm)	50	100	150	200	250	300	350	400	450	500	550	600	650	700	750	800	850	900	950	1000	1050	1100
L	314.5	364.5	414.5	464.5	514.5	564.5	614.5	664.5	714.5	764.5	814.5	864.5	914.5	964.5	1014.5	1064.5	1114.5	1164.5	1214.5	1264.5	1314.5	1364.5
A	50	100	50	100	50	100	50	100	50	100	50	100	50	100	50	100	50	100	50	100	50	100
M	1	1	2	2	3	3	4	4	5	5	6	6	7	7	8	8	9	9	10	10	11	11
N	6	6	8	8	10	10	12	12	14	14	16	16	18	18	20	20	22	22	24	24	26	26
P	50	100	150	200	250	300	350	400	450	500	550	600	650	700	750	800	850	900	950	1000	1050	1100
Weight (kg)	4.5	4.8	5.1	5.4	5.8	6.1	6.4	6.8	7.1	7.4	7.7	8.1	8.4	8.7	9.0	9.4	9.7	10.0	10.4	10.7	11.0	11.3

List of attachments

[Motor mounting]

Mounted motor specification	Timing belt, pulley	Motor mounting bolt	
		Size	Included quantity
M	Included at shipment	M5	4
Y		M5	4
P		M4	4
F		M5	4

[When origin/limit sensors are selected]

Sensor		
Manufacturer	Model	Included quantity
OMRON Corporation	EE-SX674	3

*Refer to page 42 for sensor specifications.

Dimensions Motor bottom mounting

● EBS-08LD

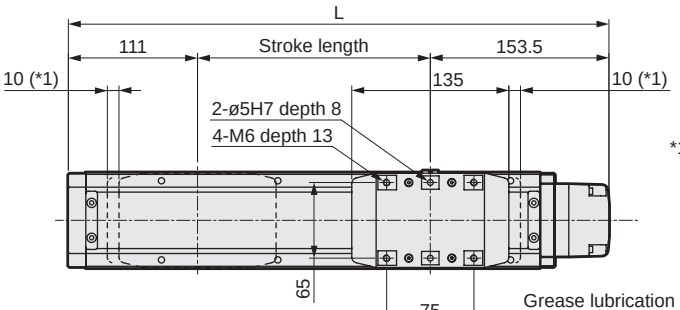

*1: Operating range to the mechanical stopper

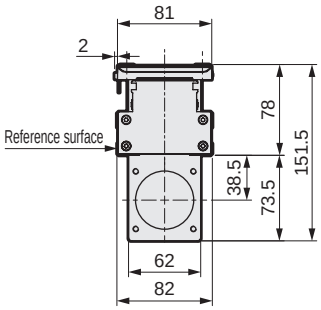

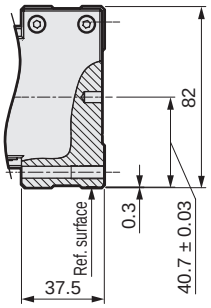

C-C cross-section (detail)

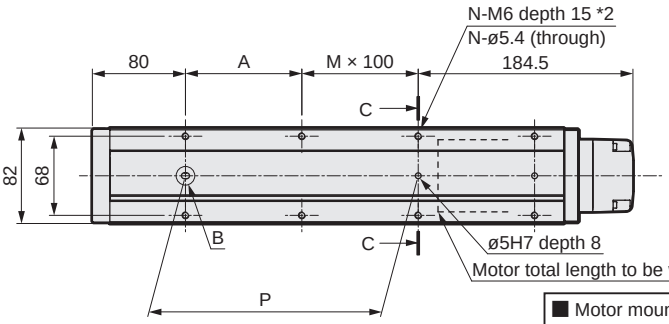

*2 When using stroke 50 mm with top surface mounting (ø5.4), the two center mounting holes cannot be used. Use the four mounting holes on the ends.

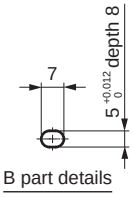

B part details

■ Motor mounting part

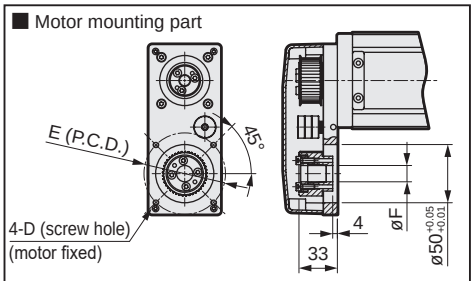

Mounted motor specification	D	E	F	Motor screw
M 200 W	M5	ø70	ø14	4-M5 × L18
Y 200 W	M5	ø70	ø14	4-M5 × L18
P 200 W	M4	ø70	ø11	4-M4 × L18
F 200 W	M5	ø70	ø9	4-M5 × L16

■ When origin/limit sensors are mounted

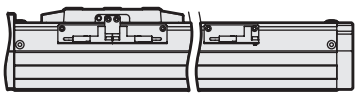

H view

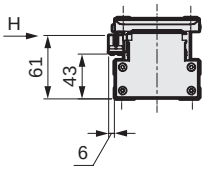

*For stroke of 50 mm, sensors must be mounted on both sides. Sensor dogs are also mounted on both sides.

Stroke code	0050	0100	0150	0200	0250	0300	0350	0400	0450	0500	0550	0600	0650	0700	0750	0800	0850	0900	0950	1000	1050	1100
Stroke length (mm)	50	100	150	200	250	300	350	400	450	500	550	600	650	700	750	800	850	900	950	1000	1050	1100
L	314.5	364.5	414.5	464.5	514.5	564.5	614.5	664.5	714.5	764.5	814.5	864.5	914.5	964.5	1014.5	1064.5	1114.5	1164.5	1214.5	1264.5	1314.5	1364.5
A	50	100	50	100	50	100	50	100	50	100	50	100	50	100	50	100	50	100	50	100	50	100
M	0	0	1	1	2	2	3	3	4	4	5	5	6	6	7	7	8	8	9	9	10	10
N	4	4	6	6	8	8	10	10	12	12	14	14	16	16	18	18	20	20	22	22	24	24
P	50	100	150	200	250	300	350	400	450	500	550	600	650	700	750	800	850	900	950	1000	1050	1100
Weight (kg)	4.5	4.8	5.1	5.4	5.8	6.1	6.4	6.8	7.1	7.4	7.7	8.1	8.4	8.7	9.0	9.4	9.7	10.0	10.4	10.7	11.0	11.3

List of attachments

[Motor mounting]

Mounted motor specification	Timing belt, pulley	Motor mounting bolt	
		Size	Included quantity
M	Included at shipment	M5	4
Y		M5	4
P		M4	4
F		M5	4

[When origin/limit sensors are selected]

Sensor		
Manufacturer	Model	Included quantity
OMRON Corporation	EE-SX674	3

*Refer to page 42 for sensor specifications.

Dimensions Motor left-side mounting

● EBS-08LL

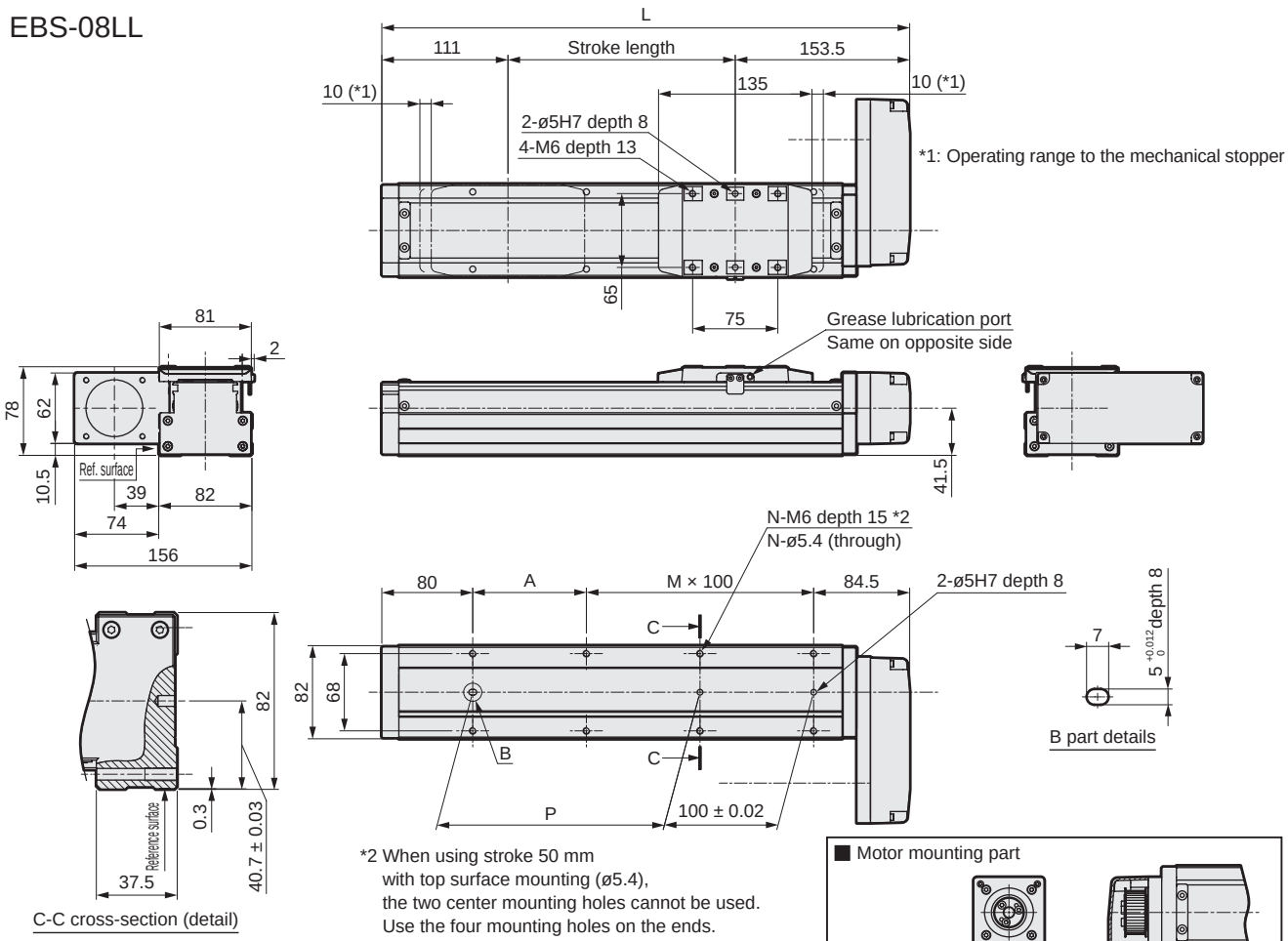

*2 When using stroke 50 mm
with top surface mounting (ø5.4),
the two center mounting holes cannot be used.
Use the four mounting holes on the ends.

■ Motor mounting part

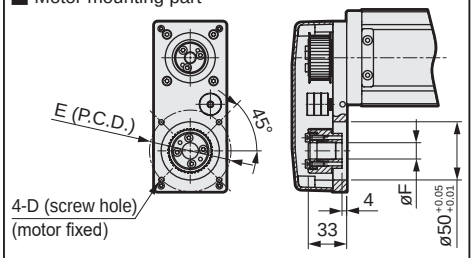

Mounted motor specification	D	E	F	Motor screw
M 200 W	M5	ø70	ø14	4-M5 × L18
Y 200 W	M5	ø70	ø14	4-M5 × L18
P 200 W	M4	ø70	ø11	4-M4 × L18
F 200 W	M5	ø70	ø9	4-M5 × L16

■ When origin/limit sensors are mounted

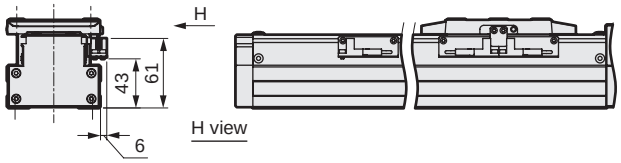

*For stroke of 50 mm,
sensors must be mounted on both sides.
Sensor dogs are also mounted on both sides.

Stroke code	0050	0100	0150	0200	0250	0300	0350	0400	0450	0500	0550	0600	0650	0700	0750	0800	0850	0900	0950	1000	1050	1100
Stroke length (mm)	50	100	150	200	250	300	350	400	450	500	550	600	650	700	750	800	850	900	950	1000	1050	1100
L	314.5	364.5	414.5	464.5	514.5	564.5	614.5	664.5	714.5	764.5	814.5	864.5	914.5	964.5	1014.5	1064.5	1114.5	1164.5	1214.5	1264.5	1314.5	1364.5
A	50	100	50	100	50	100	50	100	50	100	50	100	50	100	50	100	50	100	50	100	50	100
M	1	1	2	2	3	3	4	4	5	5	6	6	7	7	8	8	9	9	10	10	11	11
N	6	6	8	8	10	10	12	12	14	14	16	16	18	18	20	20	22	22	24	24	26	26
P	50	100	150	200	250	300	350	400	450	500	550	600	650	700	750	800	850	900	950	1000	1050	1100
Weight (kg)	4.5	4.8	5.1	5.4	5.8	6.1	6.4	6.8	7.1	7.4	7.7	8.1	8.4	8.7	9.0	9.4	9.7	10.0	10.4	10.7	11.0	11.3

List of attachments

[Motor mounting]

Mounted motor specification	Timing belt, pulley	Motor mounting bolt	
		Size	Included quantity
M	Included at shipment	M5	4
Y		M5	4
P		M4	4
F		M5	4

[When origin/limit sensors are selected]

Sensor		
Manufacturer	Model	Included quantity
OMRON Corporation	EE-SX674	3

*Refer to page 42 for sensor specifications.

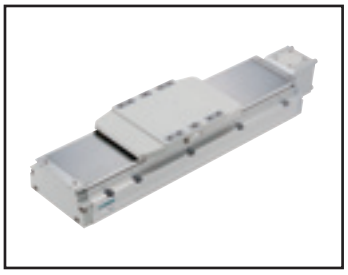

Electric actuator (motorless) Slider

EBS-12LE

Straight motor mounting

● Servo motor size: 400 W

RoHS

How to order

EBS - 12 L E - 05 0300 N NN - M 4 N N

(A: 12, B: L, C: E, D: 05, E: 0300, F: N, G: M, H: 4, I: N, J: N)

A Body size

12	Body width 120 mm

B Motor

L	None

C Motor mounting direction

E	Straight mounting

D Screw lead

05	5 mm
10	10 mm
20	20 mm
32	32 mm

E Stroke length

0050 to 1250	50 mm (In 50 mm increments) 1250 mm

F Brake

N	None

G Mounted motor specification

M	Select the mounted motor specification from the table at right.
Y	
P	

H Motor size

4	400 W

I Origin sensor *1

N	None
C	Yes

J Limit sensor *1

N	None
B	Yes

Manufacturer	400 W
Mitsubishi Electric Corporation	M
Delta Electronics Co., Ltd.	M
Sanyo Denki Co., Ltd.	M
YASKAWA Electric Corporation	Y
Keyence Corporation	Y
Panasonic Corporation	P
OMRON Corporation	P
Fuji Electric Co., Ltd.	M
Bosch Rexroth AG	P
Rockwell Automation, Inc.	M
SIEMENS AG	M

*1 Origin sensor and limit sensor are available as a set. As it is both-or-nothing, select "None" for both.

*Refer to page 7 for the motor model No.

Specifications

Applicable motor sizes		400 W servo motor			
Drive method		Ball screw ø16			
Stroke length	mm	50 to 1250			
Screw lead	mm	5	10	20	32
Max. load capacity kg *1	Horizontal	110	88	40	30
	Vertical	33	22	10	8
Max. speed	mm/s	250	500	1000	1600
Rated thrust *1	N	1388	694	347	218
Repeatability	mm	±0.01			
Lost motion	mm	0.1 or less			
Static allowable load	N	8310			
Static allowable moment	N·m	MP: 606, MY: 606, MR: 1168			
Operating ambient temperature, humidity		0 to 40°C (no freezing) 35 to 80% RH (no condensation)			
Storage ambient temperature, humidity		-10 to 50°C (no freezing) 35 to 80% RH (no condensation)			
Atmosphere		No corrosive gas, explosive gas, or dust			

*1 Rated thrust and max. load capacity are guideline values assuming that the motor mounted will output the rated torque.

Stroke and max. speed

(mm/s)

Stroke length / Screw lead	50 to 700	750	800	850	900	950	1000	1050	1100	1150	1200	1250
5	250	225	200	175	150	140	130	120	110	100	90	80
10	500	450	400	350	325	300	275	250	225	200	175	150
20	1000	1000	900	800	700	650	600	550	500	450	400	350
32	1600	1450	1300	1150	1050	950	850	750	650	550	450	350

*Max. speed is when the motor mounted by the customer can output rotation speed of 3000 rpm.
The max. speed is restricted by the stroke. Do not move at speeds beyond the limit.

Allowable overhang length

*Refer to page 34 for details.

Moment direction

MP

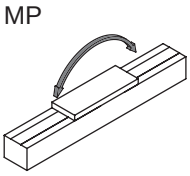

MY

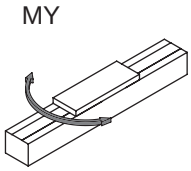

MR

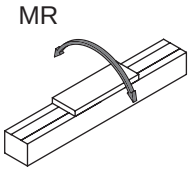

Dimensions Straight motor mounting

● EBS-12LE

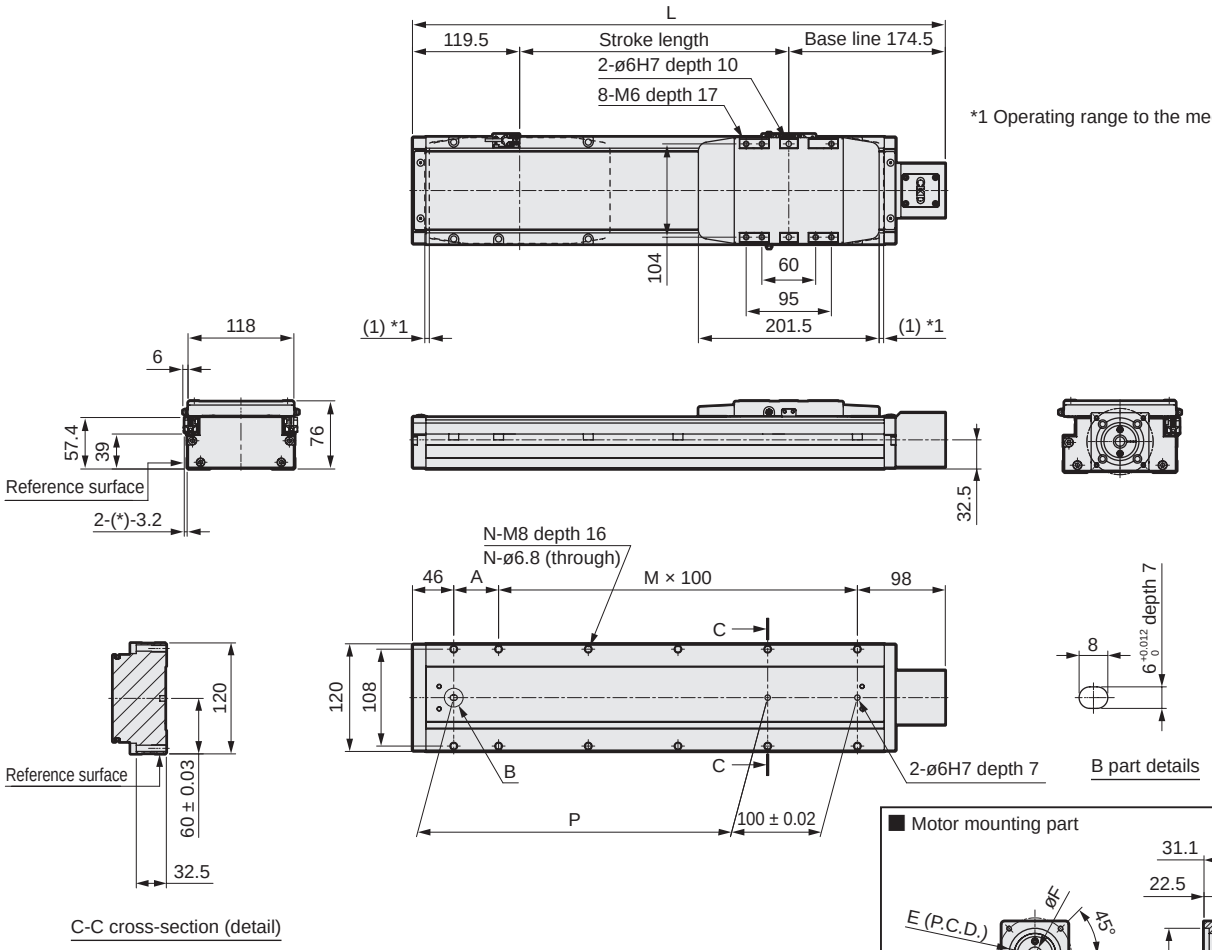

■ Motor mounting part

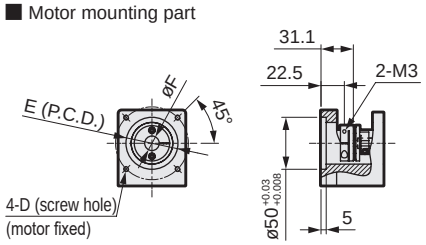

Mounted motor specification	D	E	F	Motor mounting bolt
M 400 W	M5	ø70	ø14	4-M5 × L18
Y 400 W	M5	ø70	ø14	4-M5 × L18
P 400 W	M4	ø70	ø14	4-M4 × L18

*For stroke of 50 mm,
sensors must be mounted on both sides.
Sensor dogs are also mounted on both sides.

Stroke code	0050	0100	0150	0200	0250	0300	0350	0400	0450	0500	0550	0600	0650	0700	0750	0800	0850	0900	0950	1000	1050	1100	1150	1200	1250
Stroke length (mm)	50	100	150	200	250	300	350	400	450	500	550	600	650	700	750	800	850	900	950	1000	1050	1100	1150	1200	1250
L	344	394	444	494	544	594	644	694	744	794	844	894	944	994	1044	1094	1144	1194	1244	1294	1344	1394	1444	1494	1544
A	100	50	100	50	100	50	100	50	100	50	100	50	100	50	100	50	100	50	100	50	100	50	100	50	100
M	1	2	2	3	3	4	4	5	5	6	6	7	7	8	8	9	9	10	10	11	11	12	12	13	13
N	6	8	8	10	10	12	12	14	14	16	16	18	18	20	20	22	22	24	24	26	26	28	28	30	30
P	100	150	200	250	300	350	400	450	500	550	600	650	700	750	800	850	900	950	1000	1050	1100	1150	1200	1250	1300
Weight (kg)	5.1	5.4	5.8	6.1	6.5	6.8	7.2	7.5	7.9	8.2	8.6	8.9	9.3	9.6	10.0	10.3	10.7	11.0	11.4	11.7	12.1	12.4	12.8	13.1	13.5

List of attachments

[Motor mounting parts]

Mounted motor specification	Coupling	Motor mounting bolt	
		Size	Quantity
M	Assembled at shipment	M5	4
Y		M5	4
P		M4	4

[Origin sensor, limit sensor]

Manufacturer	Model	Included quantity
OMRON Corporation	EE-SX674	3

*Refer to page 42 for sensor specifications.

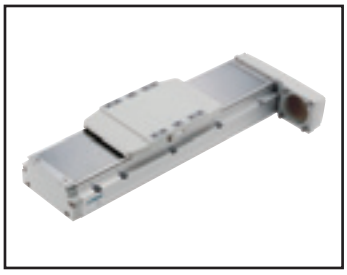

Electric actuator (motorless) Slider

EBS-12L*

Motor side mounting (left, right, bottom)

● Servo motor size: 400 W

RoHS

How to order

EBS - 12 L R - 05 0300 N NN - M 4 N N

Ⓐ 12 Body width 120 mm

Ⓑ L None

Ⓒ R Right mounting; D Bottom mounting; L Left mounting

Ⓓ 05 5 mm; 10 10 mm; 20 20 mm; 32 32 mm

Ⓔ 0050 to 1250 50 mm (In 50 mm increments) 1250 mm

Ⓕ N None

Ⓖ M Select the mounted motor specification from the table at right.; Y; P

Ⓗ 4 400 W

Ⓘ N None; C Yes *1

Ⓙ N None; B Yes *1

*1 Origin sensor and limit sensor are available as a set. As it is both-or-nothing, select "None" for both.

Manufacturer	400 W
Mitsubishi Electric Corporation	M
Delta Electronics Co., Ltd.	M
Sanyo Denki Co., Ltd.	M
YASKAWA Electric Corporation	Y
Keyence Corporation	Y
Panasonic Corporation	P
OMRON Corporation	P
Fuji Electric Co., Ltd.	M
Bosch Rexroth AG	P
Rockwell Automation, Inc.	M
SIEMENS AG	M

*Refer to page 7 for the motor model No.

Specifications

Applicable motor sizes		400 W servo motor			
Drive method		Ball screw ø16			
Stroke length	mm	50 to 1250			
Screw lead	mm	5	10	20	32
Max. load capacity *1	Horizontal kg	110	88	40	30
	Vertical kg	33	22	10	8
Max. speed	mm/s	250	500	1000	1600
Rated thrust *1	N	1388	694	347	218
Repeatability	mm	±0.01			
Lost motion	mm	0.1 or less			
Static allowable load	N	8310			
Static allowable moment	N·m	MP: 606, MY: 606, MR: 1168			
Operating ambient temperature, humidity		0 to 40°C (no freezing) 35 to 80% RH (no condensation)			
Storage ambient temperature, humidity		-10 to 50°C (no freezing) 35 to 80% RH (no condensation)			
Atmosphere		No corrosive gas, explosive gas, or dust			

*1 Rated thrust and max. load capacity are guideline values assuming that the motor mounted will output the rated torque.

Stroke and max. speed

(mm/s)

Screw lead \ Stroke length	50 to 700	750	800	850	900	950	1000	1050	1100	1150	1200	1250
5	250	225	200	175	150	140	130	120	110	100	90	80
10	500	450	400	350	325	300	275	250	225	200	175	150
20	1000	1000	900	800	700	650	600	550	500	450	400	350
32	1600	1450	1300	1150	1050	950	850	750	650	550	450	350

*Max. speed is when the motor mounted by the customer can output rotation speed of 3000 rpm.
The max. speed is restricted by the stroke. Do not move at speeds beyond the limit.

Allowable overhang length

*Refer to page 34 for details.

Moment direction

MP MY MR

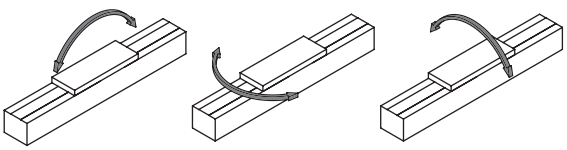

Dimensions Motor right-side mounting

● EBS-12LR

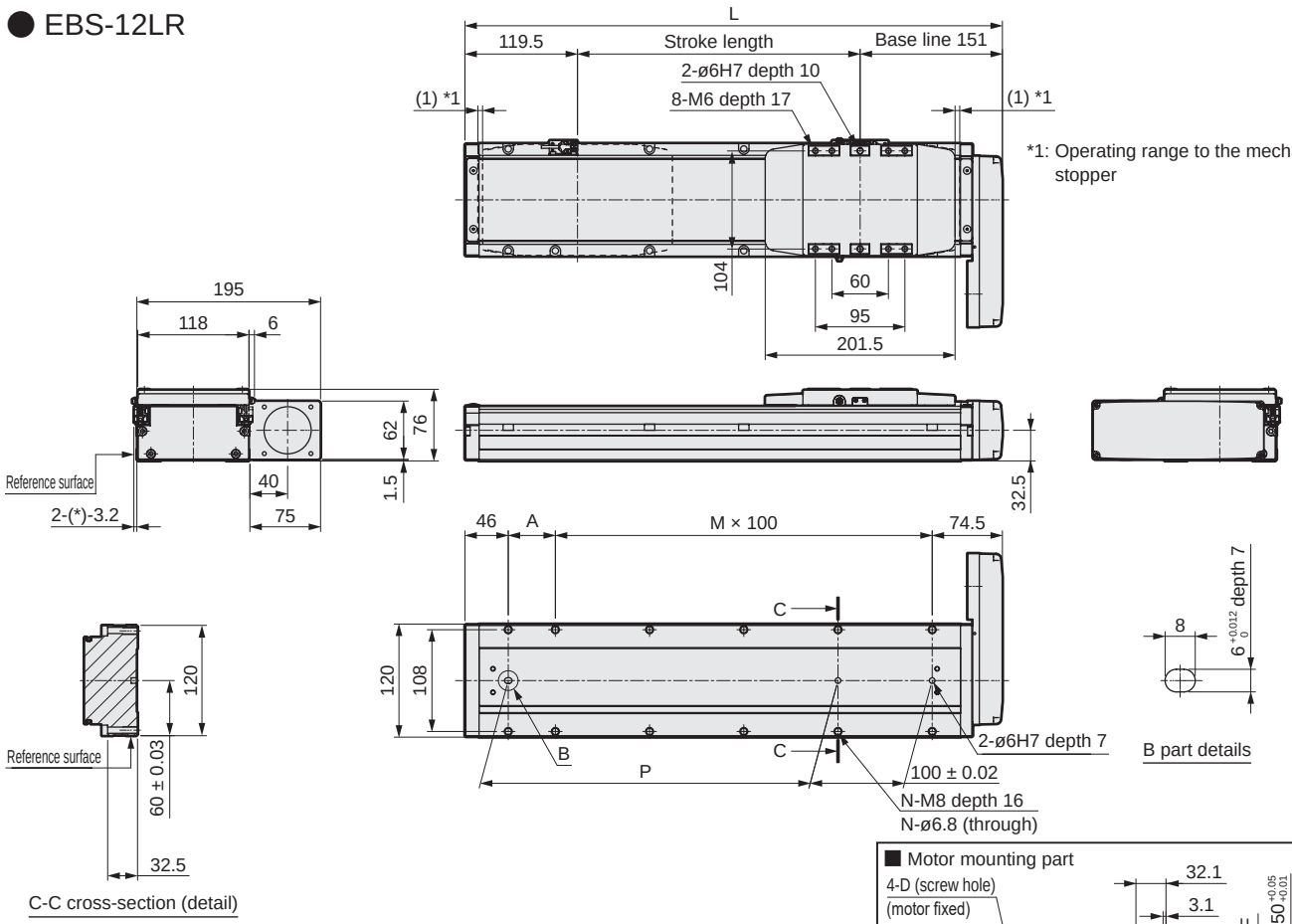

■ Motor mounting part

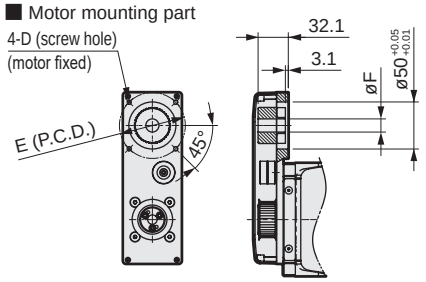

Mounted motor specification	D	E	F	Motor screw
M 400 W	M5	ø70	ø14	4-M5 × L18
Y 400 W	M5	ø70	ø14	4-M5 × L18
P 400 W	M4	ø70	ø14	4-M4 × L18

*For stroke of 50 mm,
sensors must be mounted on both sides.
Sensor dogs are also mounted on both sides.

Stroke code	0050	0100	0150	0200	0250	0300	0350	0400	0450	0500	0550	0600	0650	0700	0750	0800	0850	0900	0950	1000	1050	1100	1150	1200	1250
Stroke length (mm)	50	100	150	200	250	300	350	400	450	500	550	600	650	700	750	800	850	900	950	1000	1050	1100	1150	1200	1250
L	320.5	370.5	420.5	470.5	520.5	570.5	620.5	670.5	720.5	770.5	820.5	870.5	920.5	970.5	1020.5	1070.5	1120.5	1170.5	1220.5	1270.5	1320.5	1370.5	1420.5	1470.5	1520.5
A	100	50	100	50	100	50	100	50	100	50	100	50	100	50	100	50	100	50	100	50	100	50	100	50	100
M	1	2	2	3	3	4	4	5	5	6	6	7	7	8	8	9	9	10	10	11	11	12	12	13	13
N	6	8	8	10	10	12	12	14	14	16	16	18	18	20	20	22	22	24	24	26	26	28	28	30	30
P	100	150	200	250	300	350	400	450	500	550	600	650	700	750	800	850	900	950	1000	1050	1100	1150	1200	1250	1300
Weight (kg)	5.3	5.6	6.0	6.3	6.7	7.0	7.4	7.7	8.1	8.4	8.8	9.1	9.5	9.8	10.2	10.9	11.2	11.6	11.9	12.3	12.6	12.6	13.0	13.3	13.7

List of attachments

[Motor mounting]

Mounted motor specification	Timing belt, pulley	Motor mounting bolt	
		Size	Included quantity
M	Included at shipment	M5	4
Y		M5	4
P		M4	4

[When origin/limit sensors are selected]

Sensor		
Manufacturer	Model	Included quantity
OMRON Corporation	EE-SX674	3

*Refer to page 42 for sensor specifications.

Dimensions Motor bottom mounting

● EBS-12LD

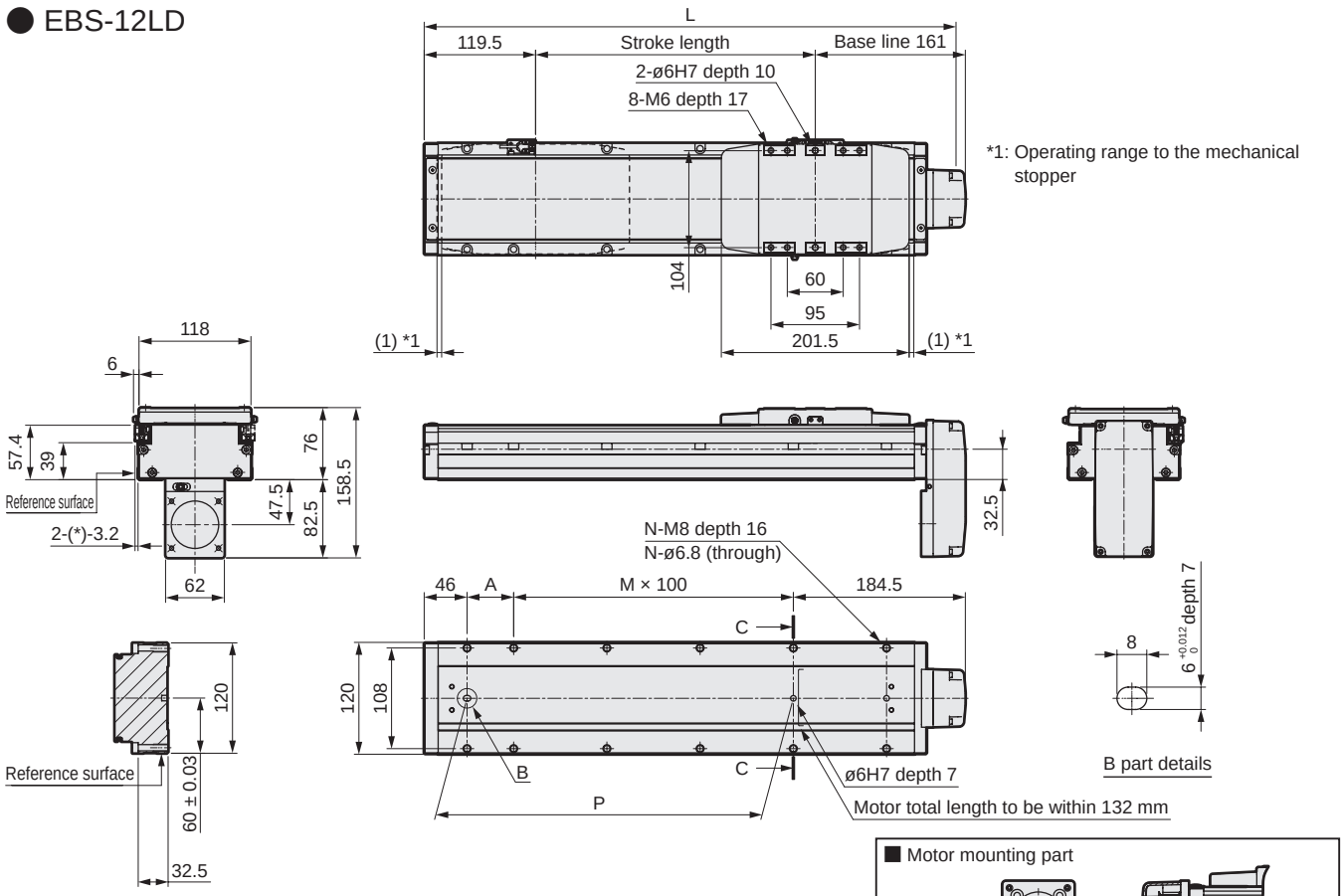

*1: Operating range to the mechanical stopper

■ Motor mounting part

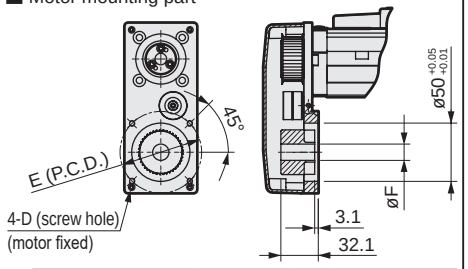

Mounted motor specification	D	E	F	Motor screw
M 400 W	M5	ø70	ø14	4-M5 × L18
Y 400 W	M5	ø70	ø14	4-M5 × L18
P 400 W	M4	ø70	ø14	4-M4 × L18

*For stroke of 50 mm,
sensors must be mounted on both sides.
Sensor dogs are also mounted on both sides.

Stroke code	0050	0100	0150	0200	0250	0300	0350	0400	0450	0500	0550	0600	0650	0700	0750	0800	0850	0900	0950	1000	1050	1100	1150	1200	1250
Stroke length (mm)	50	100	150	200	250	300	350	400	450	500	550	600	650	700	750	800	850	900	950	1000	1050	1100	1150	1200	1250
L	330.5	380.5	430.5	480.5	530.5	580.5	630.5	680.5	730.5	780.5	830.5	880.5	930.5	980.5	1030.5	1080.5	1130.5	1180.5	1230.5	1280.5	1330.5	1380.5	1430.5	1480.5	1530.5
A	100	50	100	50	100	50	100	50	100	50	100	50	100	50	100	50	100	50	100	50	100	50	100	50	100
M	0	1	1	2	2	3	3	4	4	5	5	6	6	7	7	8	8	9	9	10	10	11	11	12	12
N	4	6	6	8	8	10	10	12	12	14	14	16	16	18	18	20	20	22	22	24	24	26	26	28	28
P	100	150	200	250	300	350	400	450	500	550	600	650	700	750	800	850	900	950	1000	1050	1100	1150	1200	1250	1300
Weight (kg)	5.3	5.6	6.0	6.3	6.7	7.0	7.4	7.7	8.1	8.4	8.8	9.1	9.5	9.8	10.2	10.5	10.9	11.2	11.6	11.9	12.3	12.6	13.0	13.3	13.7

List of attachments

[Motor mounting]

Mounted motor specification	Timing belt, pulley	Motor mounting bolt	
		Size	Included quantity
M	Included at shipment	M5	4
Y		M5	4
P		M4	4

[When origin/limit sensors are selected]

Sensor		
Manufacturer	Model	Included quantity
OMRON Corporation	EE-SX674	3

*Refer to page 42 for sensor specifications.

Dimensions Motor left-side mounting

● EBS-12LL

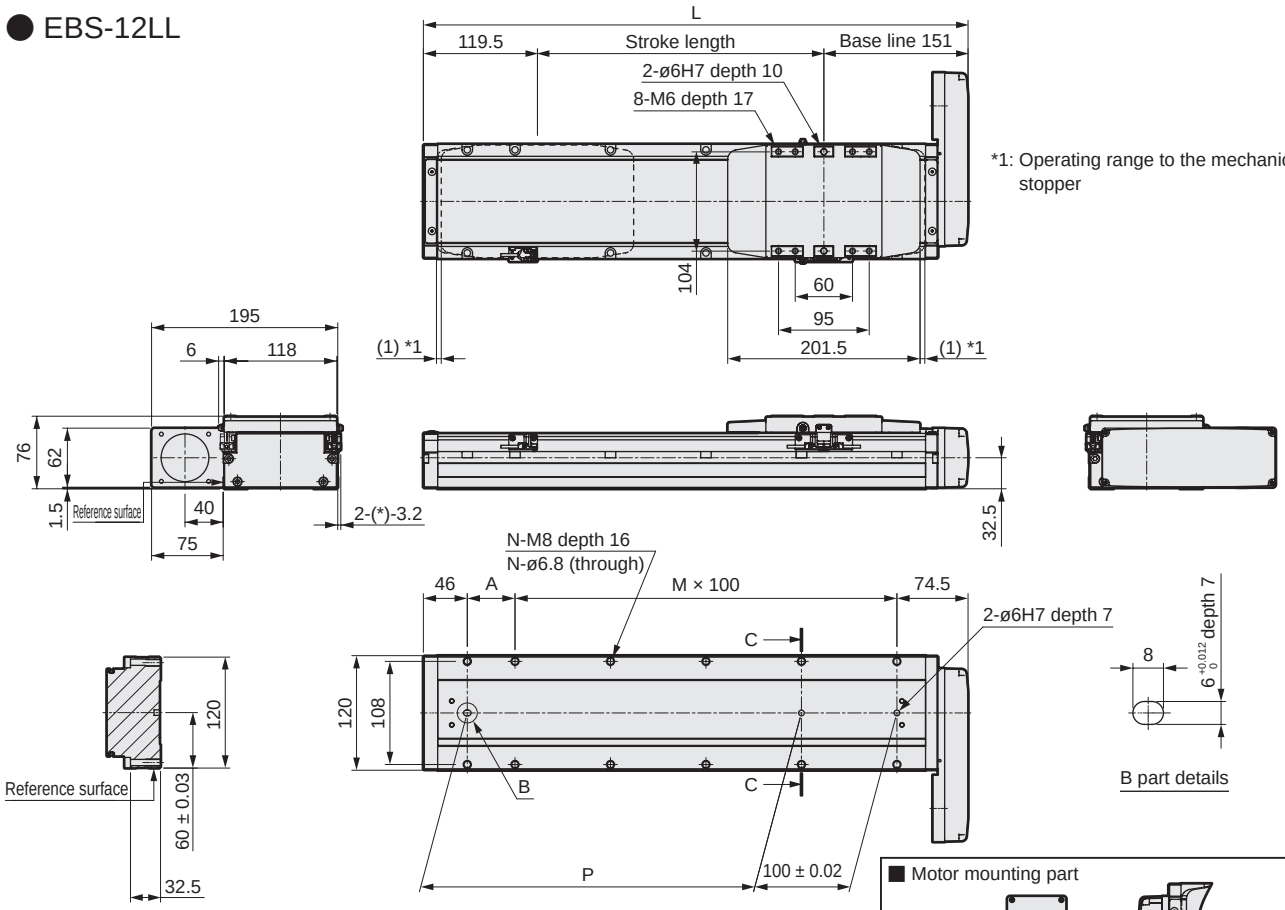

*1: Operating range to the mechanical stopper

■ Motor mounting part

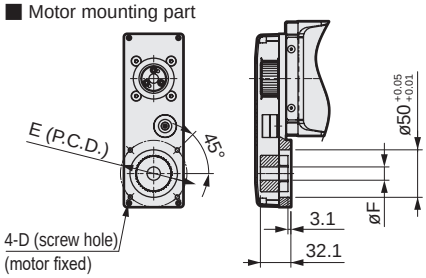

Mounted motor specification	D	E	F	Motor screw
M 400 W	M5	ø70	ø14	4-M5 × L18
Y 400 W	M5	ø70	ø14	4-M5 × L18
P 400 W	M4	ø70	ø14	4-M4 × L18

*For stroke of 50 mm,
sensors must be mounted on both sides.
Sensor dogs are also mounted on both sides.

Stroke code	0050	0100	0150	0200	0250	0300	0350	0400	0450	0500	0550	0600	0650	0700	0750	0800	0850	0900	0950	1000	1050	1100	1150	1200	1250
Stroke length (mm)	50	100	150	200	250	300	350	400	450	500	550	600	650	700	750	800	850	900	950	1000	1050	1100	1150	1200	1250
L	320.5	370.5	420.5	470.5	520.5	570.5	620.5	670.5	720.5	770.5	820.5	870.5	920.5	970.5	1020.5	1070.5	1120.5	1170.5	1220.5	1270.5	1320.5	1370.5	1420.5	1470.5	1520.5
A	100	50	100	50	100	50	100	50	100	50	100	50	100	50	100	50	100	50	100	50	100	50	100	50	100
M	1	2	2	3	3	4	4	5	5	6	6	7	7	8	8	9	9	10	10	11	11	12	12	13	13
N	6	8	8	10	10	12	12	14	14	16	16	18	18	20	20	22	22	24	24	26	26	28	28	30	30
P	100	150	200	250	300	350	400	450	500	550	600	650	700	750	800	850	900	950	1000	1050	1100	1150	1200	1250	1300
Weight (kg)	5.3	5.6	6.0	6.3	6.7	7.0	7.4	7.7	8.1	8.4	8.8	9.1	9.5	9.8	10.2	10.9	11.2	11.6	11.9	12.3	12.6	12.6	13.0	13.3	13.7

List of attachments

[Motor mounting]

Mounted motor specification	Timing belt, pulley	Motor mounting bolt	
		Size	Included quantity
M	Included at shipment	M5	4
Y		M5	4
P		M4	4

[When origin/limit sensors are selected]

Sensor		
Manufacturer	Model	Included quantity
OMRON Corporation	EE-SX674	3

*Refer to page 42 for sensor specifications.

Model selection

STEP 1 Confirming load capacity

Load capacity varies with mounting orientation and screw lead.
Refer to the Series Variation (page 4) and the specification table for each model to select the size and screw lead.

STEP 2 Confirming positioning time

Calculate the positioning time of the selected product according to the following example and confirm that the required tact is achievable.
Select the speed and acceleration/deceleration from the specification table for each model and the motor selected by the customer.

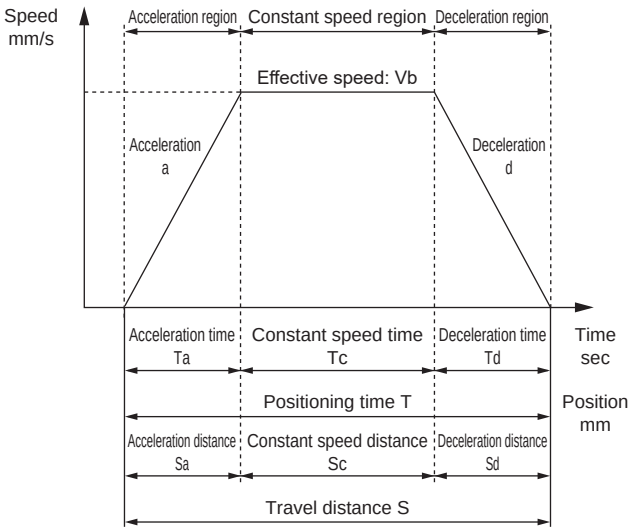

	Description	Code	Unit	Remarks
Set value	Set speed	V	mm/s	
	Set acceleration	a	mm/s^2	
	Set deceleration	d	mm/s^2	
	Travel distance	S	mm	
Calculated value	Achieved speed	Vmax	mm/s	$= \{2 \times a \times d \times S/(a + d)\}^{1/2}$
	Effective speed	Vb	mm/s	Smaller of V and Vmax
	Acceleration time	Ta	s	= Vb/a
	Deceleration time	Td	s	= Vb/d
	Constant speed time	Tc	s	= Sc/Vb
	Acceleration distance	Sa	mm	$= (a \times Ta^2)/2$
	Deceleration distance	Sd	mm	$= (d \times Td^2)/2$
	Constant speed distance	Sc	mm	= S - (Sa + Sd)
	Positioning time	T	s	= Ta + Tc + Td

*Do not use at speeds that exceed the specifications.
*Depending on acceleration/deceleration and stroke length, the trapezoid speed waveform may not be formed (the set speed may not be achieved). In this case, select the effective speed (Vb) from the set speed (V) and the achieved speed (Vmax), whichever is smaller.
*Use at acceleration and deceleration of 1 G or less for horizontal use and 0.5 G or less for vertical use.
*While settling time depends on working conditions, it may take 0.2 seconds or so.
*1 G ≈ 9.8 m/s^2.

STEP 3 Confirming allowable overhang length

Make sure that the load overhang length during operation is within the allowable range (pages 34 to 39).

Contact CKD for selection details.

MEMO

Allowable overhang length (EBS Series)

[When installed horizontally]

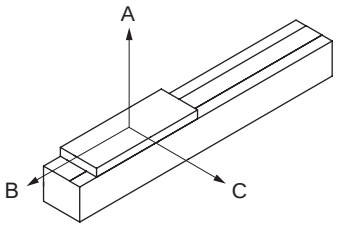

[Allowable overhang length]

● EBS-04

Motor mounted	Acceleration/deceleration G	Screw lead	Weight kg	Overhang mm A	B	C
Straight/ side/bottom	0.3	6	5	800	160	225
			10	570	70	100
			20	250	30	40
		12	4	800	180	210
			8	380	80	100
			12	230	50	60
	0.5	6	5	800	160	220
			10	400	70	100
			15	240	40	60
		12	4	580	180	200
			8	260	80	90
			12	150	50	50
	1	6	5	520	160	210
			10	240	70	90
			15	140	40	50
		12	4	350	180	180
			8	150	80	80
			12	80	50	40

*Values are when the actuator operating life is 5,000 km. (Screw lead: 2 mm is the value when the operating life is 1,000 km.)
*The overhang direction is for a single-direction load.
*Dimensions A, B, and C are measured from the center of the table top.
*Values are at stroke: 350 mm and motor rotation speed: 3,000 rpm. However, for E B S-12, acceleration/deceleration 0.3G is the values at 1,800 rpm and 0.5G is the values at 2,400 rpm.

● EBS-05

Motor mounted	Acceleration/deceleration G	Screw lead	Weight kg	Overhang mm A	B	C
Straight/ side/bottom	0.3	2	10	1000	160	225
			20	1000	75	105
			30	815	45	65
		5	10	1000	125	170
			20	500	55	75
			30	305	35	45
		10	5	1000	235	285
			10	580	110	135
			15	360	70	80
		20	2.5	1000	400	385
			5	615	195	180
			10	265	90	75
	0.5	2	10	1000	160	225
			20	890	75	105
			30	570	45	65
		5	10	765	125	165
			20	345	55	75
			30	205	35	45
		10	5	875	235	280
			10	405	110	125
			15	245	70	75
		20	2.5	925	400	365
			5	425	195	165
			10	180	90	70
	1	2	10	1000	160	220
			20	545	75	100
			30	340	45	60
		5	10	465	125	160
			20	200	55	70
			30	115	35	40
		10	5	535	235	255
			10	240	110	115
			15	140	70	65
		20	2.5	565	400	315
			5	250	190	140
			10	95	85	55

Allowable overhang length (EBS Series)

● EBS-08

Motor mounted	Acceleration/deceleration G	Screw lead	Weight kg	Overhang mm A	B	C
Straight/ side/bottom	0.3	5	10	1000	400	620
			25	1000	150	235
			50	560	65	105
		10	10	1000	360	480
			20	840	170	230
			30	530	110	140
		20	2.5	1000	1000	1000
			5	1000	610	670
			10	950	295	315
	0.5	5	10	1000	400	620
			25	920	150	235
			50	420	65	105
		10	10	1000	360	480
			20	625	170	225
			30	390	110	140
		20	2.5	1000	1000	1000
			5	1000	610	620
			10	670	295	290
	1	5	10	1000	400	600
			25	565	150	220
			50	250	65	95
		10	10	820	360	435
			20	380	170	200
			30	230	110	120
		20	2.5	1000	1000	1000
			5	870	610	520
			10	400	295	240

● EBS-12

Motor mounted	Acceleration/deceleration G	Screw lead	Weight kg	Overhang mm A	B	C
Straight/ side/bottom	0.3	5	30	1800	445	730
			60	1800	215	350
			100	1050	120	200
		10	30	1800	400	580
			50	1200	230	335
			80	730	140	195
		20	10	1800	1000	1150
			20	1600	505	560
			40	775	240	260
		32	10	1800	950	1100
			20	1600	480	540
			30	1000	315	355
	0.5	5	30	1800	445	720
			60	1300	215	345
			100	755	120	195
		10	30	1450	400	555
			50	865	230	320
			80	510	140	185
		20	10	1800	1000	1050
			20	1150	505	520
			40	540	240	240
		32	10	1550	800	750
			20	760	400	355
			30	480	260	220
	1	5	30	1650	445	690
			60	800	215	330
			100	460	120	185
		10	30	930	400	500
			50	530	230	285
			80	305	140	160
		20	10	1500	1000	915
			20	715	500	435
			40	325	240	195
		32	10	725	700	455
			20	325	335	205
			30	195	215	120

Allowable overhang length (EBS Series)

[When wall-mounted]

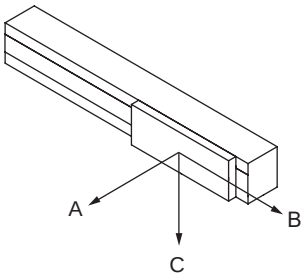

[Allowable overhang length]

● EBS-04

Motor mounted	Acceleration/deceleration G	Screw lead	Weight kg	Overhang mm A	B	C
Straight/ side/bottom	0.3	6	5	180	130	800
			10	65	40	470
			15	25	20	240
		12	4	180	150	730
			8	60	50	280
			12	25	20	130
	0.5	6	5	180	130	800
			10	60	40	330
			15	25	20	170
		12	4	170	140	520
			8	60	50	200
			12	25	20	90
	1	6	5	170	130	490
			10	60	40	200
			15	25	20	100
		12	4	150	140	320
			8	50	50	120
			12	20	20	50

*Values are when the actuator operating life is 5,000 km. (Screw lead: 2 mm is the value when the operating life is 1,000 km.)
*The overhang direction is for a single-direction load.
*Dimensions A, B, and C are measured from the center of the table top.
*Values are at stroke: 350 mm and motor rotation speed: 3,000 rpm. However, for E B S-12, acceleration/deceleration 0.3G is the values at 1,800 rpm and 0.5G is the values at 2,400 rpm.

● EBS-05

Motor mounted	Acceleration/deceleration G	Screw lead	Weight kg	Overhang mm A	B	C
Straight/ side/bottom	0.3	2	10	175	125	1000
			20	55	40	1000
			30	15	10	540
		5	5	310	230	1000
			10	125	90	965
			20	30	20	335
		10	5	245	200	1000
			10	90	75	460
			15	40	30	230
		20	2.5	350	355	1000
			5	145	145	500
			10	45	45	150
	0.5	2	10	175	125	1000
			20	55	40	775
			30	15	10	385
		5	5	310	230	1000
			10	120	90	685
			20	30	20	240
		10	5	240	200	805
			10	90	75	330
			15	40	30	160
		20	2.5	330	355	855
			5	135	145	355
			10	40	40	105
	1	2	10	175	125	1000
			20	55	40	480
			30	15	10	235
		5	5	300	230	955
			10	120	90	425
			20	30	20	145
		10	5	220	200	500
			10	80	75	200
			15	35	30	95
		20	2.5	290	355	530
			5	115	145	220
			10	30	40	60

Allowable overhang length (EBS Series)

● EBS-08

Motor mounted	Acceleration/deceleration G	Screw lead	Weight kg	Overhang mm A	B	C
Straight/ side/bottom	0.3	5	10	580	370	1000
			25	185	120	1000
			50	55	35	465
		10	10	450	325	1000
			20	190	135	795
			30	100	75	455
		20	2.5	1000	1000	1000
			5	630	565	1000
			10	280	250	850
	0.5	5	10	580	370	1000
			25	185	120	855
			50	55	35	330
		10	10	445	325	1000
			20	185	135	565
			30	100	75	325
		20	2.5	1000	1000	1000
			5	585	565	1000
			10	260	250	605
	1	5	10	555	370	1000
			25	180	120	530
			50	50	35	200
		10	10	405	325	800
			20	165	135	350
			30	90	70	195
		20	2.5	1000	1000	1000
			5	500	560	845
			10	220	250	370

● EBS-12

Motor mounted	Acceleration/deceleration G	Screw lead	Weight kg	Overhang mm A	B	C
Straight/ side/bottom	0.3	5	30	685	415	1800
			60	300	185	1750
			100	150	90	960
		10	30	540	365	1800
			50	290	200	1100
			80	155	105	625
		20	10	1100	980	1800
			20	525	460	1500
			40	225	200	670
		32	10	1085	925	1800
			20	530	425	1455
			30	325	275	950
	0.5	5	30	675	415	1800
			60	300	185	1250
			100	145	90	685
		10	30	515	365	1400
			50	280	200	805
			80	145	105	445
		20	10	1000	980	1800
			20	490	460	1100
			40	210	195	480
		32	10	700	740	1520
			20	325	350	690
			30	190	210	415
	1	5	30	645	415	1600
			60	285	185	780
			100	140	90	425
		10	30	465	365	900
			50	250	200	500
			80	130	105	270
		20	10	895	980	1450
			20	415	460	685
			40	175	195	295
		32	10	435	630	695
			20	185	270	295
			30	100	150	165

Allowable overhang length (EBS Series)

[When installed vertically]

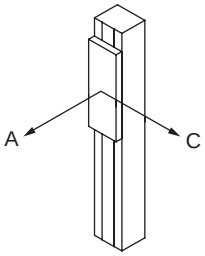

[Allowable overhang length]

● EBS-04

Motor mounted	Acceleration/deceleration G	Screw lead	Weight kg	Overhang mm A	Overhang mm C
Straight/ side/bottom	0.3	6	1	800	780
			3	240	230
			5	120	120
		12	1	690	630
			1.5	440	410
			2	320	300
	0.5	6	1	800	780
			3	240	230
			5	120	120
		12	1	680	620
			1.5	400	440
			2	320	290

*Values are when the actuator operating life is 5,000 km. (Screw lead: 2 mm is the value when the operating life is 1,000 km.)
*The overhang direction is for a single-direction load.
*Dimensions A, B, and C are measured from the center of the table top.
*Values are at stroke: 350 mm and motor rotation speed: 3,000 rpm. However, for E B S-12, acceleration/deceleration 0.3G is the values at 1,800 rpm and 0.5G is the values at 2,400 rpm.

● EBS-05

Motor mounted	Acceleration/deceleration G	Screw lead	Weight kg	Overhang mm A	Overhang mm C
Straight/ side/bottom	0.3	2	2.5	640	640
			5	295	295
			10	120	120
		5	2.5	500	490
			5	225	225
			10	85	85
		10	1	1000	1000
			2.5	435	410
			5	195	180
		20	0.5	1000	1000
			1	910	760
			2.5	335	280
	0.5	2	2.5	640	640
			5	295	295
			10	120	120
		5	2.5	500	500
			5	225	225
			10	85	85
		10	1	1000	1000
			2.5	430	410
			5	190	180
		20	0.5	1000	1000
			1	870	740
			2.5	315	275

Allowable overhang length (EBS Series)

● EBS-08

Motor mounted	Acceleration/deceleration G	Screw lead	Weight kg	Overhang mm A	Overhang mm C
Straight/ side/bottom	0.3	5	5	775	760
			10	360	350
			15	220	220
		10	3	1000	1000
			5	680	630
			8	405	375
		20	0.5	1000	1000
			1	1000	1000
			2.5	1000	930
	0.5	5	5	775	760
			10	360	350
			15	220	220
		10	3	1000	1000
			5	670	630
			8	400	375
		20	0.5	1000	1000
			1	1000	1000
			2.5	1000	890

● EBS-12

Motor mounted	Acceleration/deceleration G	Screw lead	Weight kg	Overhang mm A	Overhang mm C
Straight/ side/bottom	0.3	5	10	1300	1300
			20	635	625
			30	405	400
		10	10	1150	1100
			15	765	715
			20	560	525
		20	5	1800	1500
			7	1300	1100
			10	910	765
		32	3	1800	1750
			5	1750	1515
			8	1115	950
	0.5	5	10	1300	1250
			20	635	625
			30	405	400
		10	10	1150	1050
			15	750	710
			20	550	520
		20	5	1750	1500
			7	1200	1050
			10	870	740
		32	3	1800	1775
			5	1350	1075
			8	805	680
	1	5	10	1300	1250
			20	630	615
			30	400	395
		10	10	1100	1000
			15	725	685
			20	530	500
		20	5	1600	1352
			7	1100	995
			10	790	685
		32	3	1550	1250
			5	920	750
			8	555	460

Slider parallelism (EBS Series) *Reference value

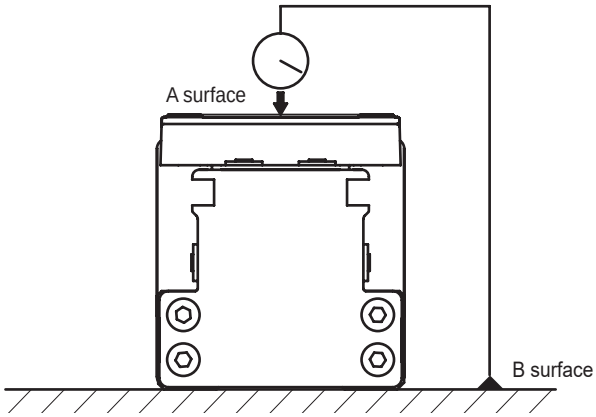

(mm)

	Parallelism
	A surface against B surface
EBS-04 Series	0.03
EBS-05 Series	
EBS-08 Series	
EBS-12 Series	

*Parallelism with the product fixed to a surface plate.

Table deflection (EBS Series) *Reference value

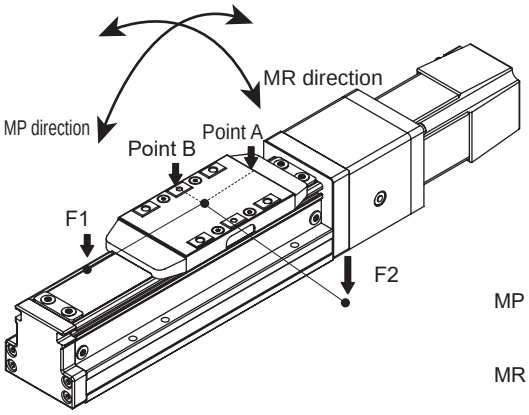

MP direction: Displacement at the table end (Point A) when load (F1) is applied to a position 100 mm from the center of the table

MR direction: Displacement at the table end (Point B) when load (F2) is applied to a position 100 mm from the center of the table

Displacement in MR direction

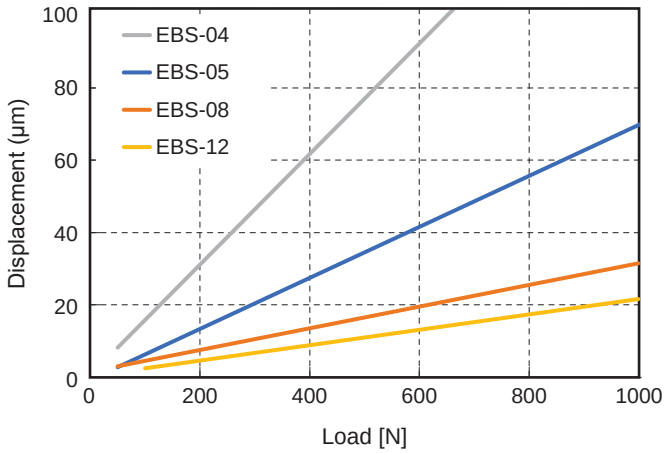

Displacement in MP direction

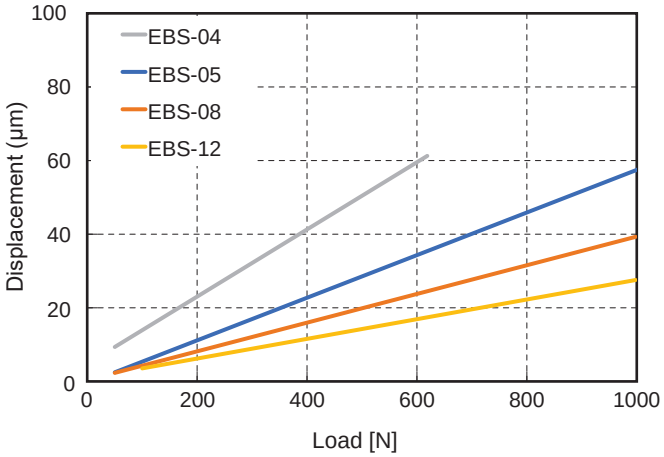

List of attachments

Motor mounting bolt (common motor mounting direction)

Model No.	Mounted motor specification	Motor size	Size	Quantity
EBS-04	M	50 W	M4	4
	Y		M4	4
	P		M3	4
	F		M4	4
EBS-05	M	100 W	M4	4
	Y		M4	4
	P		M3	4
	F		M4	4
EBS-08	M	200 W	M5	4
	Y		M5	4
	P		M4	4
	F		M5	4
EBS-12	M	400 W	M5	4
	Y		M5	4
	P		M4	4

Coupling

Model No.	Part name	Quantity
LE (Motor mounting direction: Straight)	Coupling (Assembled at shipment)	1

Timing belt, pulley (motor side)

Model No.	Shipping format	Quantity
L* (Motor mounting on side/bottom)	Included at shipment *1	1 each

*1 The body side pulley is assembled.

Sensor mounting plate

Model No.	Shipping format	Quantity
For both with and without sensor	Included at shipment *1	3

*1 Screws for mounting plate are also included.
Sensor dogs are assembled onto all products.

Origin sensor, limit sensor

Model No.	Shipping format	Quantity
When "with" sensor is selected	Included at shipment *2	3 *3

*2 Sensor mounting screws are also included.
*3 When "None" is selected for origin sensor or limit sensor, the other sensor is also "None".

Origin sensor, limit sensor

[Specifications]

Item		Specifications
Manufacturer	Manufacturer	OMRON Corporation
	Model	EE-SX674
Hysteresis		0.025 mm or less
Light source (peak emission wavelength)		GaAs infrared LED (940 nm)
Indicator lamp		ON when receiving light (red)
Power supply voltage		5 to 24 VDC ±10% ripple (P-P) 10% or less
Current consumption		12 mA or less (with L terminal open)
Control output	Type	NPN (NPN open collector)
	Output	5 to 24 VDC 100 mA or less
	Current when OFF	0.5 mA or less
	Residual voltage	0.8 V or less (with 100 mA load current)
		0.4 V or less (with 40 mA load current)
Operating ambient illumination		Light-receiving surface luminance Fluorescent light: 1,000 lx or less
Ambient temperature range	Operating	-25 to + 55°C, no condensation or freezing
	In storage	-30 to + 80°C, no condensation or freezing
Ambient humidity range	Operating	5 to 85% RH, no condensation or freezing
	In storage	5 to 95% RH, no condensation or freezing
Degree of protection		IP50 IEC 60529 Standards
Cord length		2 m (Connector with cord [EE-1006 2M])

Output circuit

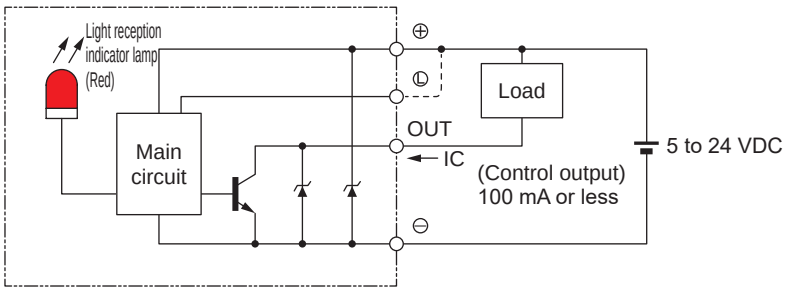

Wiring diagram

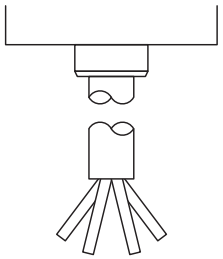

Terminal layout

Brown	5 to 24 VDC
Pink	L
Blue	0 V
Black	OUTPUT

Maintenance parts

■ Maintenance parts (coupling)

Model No. 	Compatibility	Hole diameter
EBS-05-COUPLING	EBS-04, EBS-05	ø8
EBS-08-COUPLING-M	EBS-08 (Mounted motor specification: M/Y/F)	ø14
EBS-08-COUPLING-P	EBS-08 (Mounted motor specification: P)	ø11
EBS-12-COUPLING-M	EBS-12 (Mounted motor specification: M/Y)	ø14
EBS-12-COUPLING-P	EBS-12 (Mounted motor specification: P)	ø14

■Maintenance parts (timing belt, pulley)

Model No. 	Compatibility	Part
EBS-04-BELT-KIT	EBS-04LR/LD/LL	Timing belt, pulley (motor side) (1 each)
EBS-05-BELT-KIT	EBS-05LR/LD/LL	
EBS-08-BELT-KIT-M	EBS-08LR/LD/LL (Mounted motor specification: M/Y/F)	
EBS-08-BELT-KIT-P	EBS-08LR/LD/LL (Mounted motor specification: P)	
EBS-12-BELT-KIT-M	EBS-12LR/LD/LL (Mounted motor specification: M/Y)	
EBS-12-BELT-KIT-P	EBS-12LR/LD/LL (Mounted motor specification: P)	

■ Maintenance parts (origin sensor, limit sensor)

Model No. 	Compatibility	Part
EBS-04-SENSOR-N-KIT	EBS-04	Body, cable, mounting plate (1 each) *1
EBS-08-SENSOR-N-KIT	EBS-05, EBS-08	Body, cable, mounting plate (1 each) *1
EBS-12-SENSOR-N-KIT	EBS-12	Body, cable, mounting plate (1 each) *1

*1 Mounting plate screws and sensor mounting screws are also included.

■ Maintenance parts (grease nozzle)

Model No. 	Compatibility
EBS-NOZZLE	EBS-04, EBS-05, EBS-08

■ Maintenance parts (steel belt)

Model No. 	Compatibility
EBS-04-STEELBELT (stroke code 4-digit)	EBS-04 (applicable stroke product)
EBS-05-STEELBELT (stroke code 4-digit)	EBS-05 (applicable stroke product)
EBS-08-STEELBELT (stroke code 4-digit)	EBS-08 (applicable stroke product)
EBS-12-STEELBELT (stroke code 4-digit)	EBS-12 (applicable stroke product)

Safety precautions

Stepper motor compatible				Servo motor compatible							
ECS	ETS	EBR	EBS	EKS	ECV	ETV	ECS	ETS Multi-Axis	ETS	EBR	EBS

EBR-L

Rod with built-in guide

Servo motor compatible electric actuator
Motorless specification



CONTENTS

Product introduction	Intro
Series variation	46
● Specifications/How to order/Dimensions	
· EBR-04L	50
· EBR-05L	56
· EBR-08L	62
· EBR-12L	68
● Model selection	74
● Technical data	76
⚠ Safety precautions	686
Model Selection Check Sheet	708

Series variation

Type	Model No.		Applicable motor size (W)	Body width (mm)	Screw lead (mm)	Max. load capacity (kg) Horizontal *1	Max. load capacity (kg) Vertical	Stroke length (mm) and max. speed (mm/s) *2	Page
Rod with built-in guide		EBR-04L*-06	50	44	6	20	5	50 mm / 100 / 150: 300 mm/s; 200 / 250 / 300 / 350 / 400: 250; *3 1.63 sec	50
		EBR-04L*-12			12	12	2	50 mm / 100 / 150: 600; 200 / 250 / 300 / 350 / 400: 510; 0.84 sec	
		EBR-05L*-02	100	54	2	30	10	50 mm / 100 / 150: 100; 200 / 250 / 300 / 350 / 400: 85; 4.71 sec	56
		EBR-05L*-05			5	30	10	50 mm / 100 / 150: 250; 200 / 250 / 300 / 350 / 400: 200; 2.02 sec	
		EBR-05L*-10			10	15	5	50 mm / 100 / 150: 500; 200 / 250 / 300 / 350 / 400: 400; 1.04 sec	
		EBR-05L*-20			20	10	2.5	50 mm / 100 / 150: 1000; 200 / 250 / 300 / 350 / 400: 850; 0.56 sec	
		EBR-08L*-05	200	82	5	50	15	50 mm / 100 / 150: 250; 200 / 250 / 300 / 350 / 400: 200; 3.52 sec	62
		EBR-08L*-10			10	30	8	50 mm / 100 / 150: 500; 200 / 250 / 300 / 350 / 400: 400; 1.79 sec	
		EBR-08L*-20			20	12	2.5	50 mm / 100 / 150: 1000; 200 / 250 / 300 / 350 / 400: 850; 0.91 sec	
		EBR-12L*-05	400	120	5	110	33	50 mm / 100 / 150: 250; 200 / 250 / 300 / 350 / 400: 200; 4.02 sec	68
		EBR-12L*-10			10	88	22	50 mm / 100 / 150: 500; 200 / 250 / 300 / 350 / 400: 400; 2.04 sec	
		EBR-12L*-20			20	40	10	50 mm / 100 / 150: 1000; 200 / 250 / 300 / 350 / 400: 850; 1.03 sec	
		EBR-12L*-32			32	30	8	50 mm / 100 / 150: 1600; 200 / 250 / 300 / 350 / 400: 1350; 0.73 sec	

*1: The load capacity when wall mounted is the same as for horizontal installation.
*2: The max. speed is the speed when the motor mounted by the customer can output a rotation speed of 3000 rpm. The max. speed is restricted by the stroke. Do not move at speeds beyond the limit.
*3: ⏱ shows the positioning time. Maximum stroke when installed horizontally and operated at max. speed and max. acceleration/deceleration. Note that this is not the value at maximum load capacity.

How to order

Rod with built-in guide

EBR - 05 L E - 00 - 02 0050 N NN - M 1 N N

Ⓐ Body size

04	Body width 44 mm
05	Body width 54 mm
08	Body width 82 mm
12	Body width 120 mm

Ⓑ Motor

L	None

Ⓒ Motor mounting direction

E	Straight mounting
R	Right mounting
D	Bottom mounting
L	Left mounting

Ⓓ Screw lead

02	2 mm
05	5 mm
06	6 mm
10	10 mm
12	12 mm
20	20 mm
32	32 mm

Ⓔ Stroke length

0050	50 mm
to	(In 50 mm increments)
0800	800 mm

Ⓕ Brake

N	None

Ⓖ Mounted motor specification

M	Refer to the list on the page at right
Y	
P	
F	

Ⓗ Motor size

H	50 W
1	100 W
2	200 W
4	400 W

Ⓘ Origin sensor

N	None
C	Yes

Ⓙ Limit sensor

N	None
B	Yes

*This product is composed of an actuator (and motor mounting parts) only; there is no motor attached.
The user must prepare, mount, and adjust the motor and driver.

List of servo motors recommended for mounting

Code	Manufacturer	Series	50 W	100 W
M	Mitsubishi Electric Corporation	MELSERVO J4	HG-KR053	HG-KR13
		MELSERVO J5	HG-KT_053W	HK-KT_13W
	Delta Electronics Co., Ltd.	ECMA-C	ECMA-C1040F	ECMA-C10401
	Sanyo Corporation, Ltd.	SANMOTION R	R2□A04005	R2□A04010
Y	YASKAWA Electric Corporation	Σ-V	SGMJV-A5	SGMJV-01
		Σ-7	SGM7J-A5	SGM7J-01
	Keyence Corporation	SV	SV-□005	SV-□010
		SV2	SV2-□005	SV2-□010
P	Panasonic Corporation	MINAS A5	MSMD5A	MSMD01
		MINAS A6	MSMF5A	MSMF01
M	OMRON Corporation	G5	R88M-K05030	R88M-K10030
		1S	R88M-1M05030	R88M-1M10030
	Fuji Electric Co., Ltd.	ALPHA7 GYS	GYS500D7-□B2□	GYS101D7-□B2□
		ALPHA7 GYB	-	-
F	FANUC CORPORATION	βiS-B	A06B-0111-B1	A06B-0112-B1
P	Bosch Rexroth AG	MSM	MSM019A	MSM019B
M	Rockwell Automation, Inc.	TLP	TLP-A046-005-DKA□2	TLP-A046-010-DKA□2
	SIEMENS AG	1FK2 *1	1FK2102-0AG0	1FK2102-1AG0

Code	Manufacturer	Series	200 W	400 W
M	Mitsubishi Electric Corporation	MELSERVO J4	HG-KR23	HG-KR43
		MELSERVO J5	HK-KT_23W	HK-KT_43W
	Delta Electronics Co., Ltd.	ECMA-C	ECMA-C10602	ECMA-C10604
	Sanyo Corporation, Ltd.	SANMOTION R	R2□A06020	R2□A06040
Y	YASKAWA Electric Corporation	Σ-V	SGMJV-02	SGMJV-04
		Σ-7	SGM7J-02	SGM7J-04
	Keyence Corporation	SV	SV-□020	SV-□040
		SV2	SV2-□020	SV2-□040
P	Panasonic Corporation	MINAS A5	MSMD02	MSMD04
		MINAS A6	MSMF02	MSMF04
	OMRON Corporation	G5	R88M-K20030	R88M-K40030
		1S	R88M-1M20030	R88M-1M40030
M	Fuji Electric Co., Ltd.	ALPHA7 GYS	GYS201D7-□B2□	GYS401D7-□B2□
		ALPHA7 GYB	GYB201D7-□B2□	GYB401D7-□B2□
F	FANUC CORPORATION	βiS-B	A06B-2115-B1	-
P	Bosch Rexroth AG	MSM	MSM031B	MSM031C
M	Rockwell Automation, Inc.	TLP	TLP-A070-020-DKA□2	TLP-A070-040-DKA□2
	SIEMENS AG	1FK2 *1	1FK2203-2AG0	1FK2203-4AG0

*Contact CKD for mounting other than the above motors and products of other motor manufacturers.
*1 The servo motor is subject to the regulations of Export Trade Control Order Appendix Table 1 Item 7 (8), and is applicable with regard to its specifications. (as of January 2021)

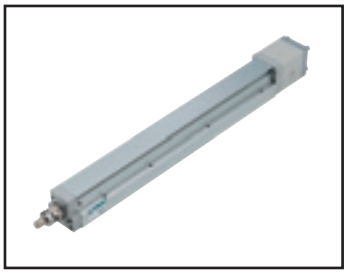

Electric actuator (motorless) Rod with built-in guide

EBR-04LE

Straight motor mounting

● Servo motor size: 50 W

RoHS

How to order

EBR - 04 L E - 00 - 06 0050 N NN - M H N N

(A) (B) (C) (D) (E) (F) (G) (H) (I) (J)

(A) Body size

04	Body width 44 mm

(B) Motor

L	None

(C) Motor mounting direction

E	Straight mounting

(D) Screw lead

06	6 mm
12	12 mm

(E) Stroke length

0050 to 0400	50 mm (In 50 mm increments) 400 mm

(F) Brake

N	None

(G) Mounted motor specification

M Y P F	Select the mounted motor specification from the table at right.

(H) Motor size

H	50 W

(I) Origin sensor *1

N	None
C	Yes

(J) Limit sensor *1

N	None
B	Yes

Manufacturer	50 W
Mitsubishi Electric Corporation	M
Delta Electronics Co., Ltd.	M
Sanyo Denki Co., Ltd.	M
YASKAWA Electric Corporation	Y
Keyence Corporation	Y
Panasonic Corporation	P
OMRON Corporation	M
Fuji Electric Co., Ltd.	M
FANUC CORPORATION	F
Bosch Rexroth AG	P
Rockwell Automation, Inc.	M
SIEMENS AG	M

*Refer to page 49 for the motor model No.

*1 Origin sensor and limit sensor are a set. As it is both-or-nothing, select "None" for both.

Specifications

Applicable motor sizes		50 W servo motor	
Drive method		Ball screw ø10	
Stroke length	mm	50 to 400	
Screw lead	mm	6	12
Max. load capacity *1	kg Horizontal	20	12
	kg Vertical	5	2
Max. speed	mm/s	300	600
Rated thrust *1	N	141	71
Repeatability	mm	±0.01	
Lost motion	mm	0.1 or less	
Operating ambient temperature, humidity		0 to 40°C (no freezing) 35 to 80% RH (no condensation)	
Storage ambient temperature, humidity		-10 to 50°C (no freezing) 35 to 80% RH (no condensation)	
Atmosphere		No corrosive gas, explosive gas, or dust	

*Refer to pages 76 to 77 for the allowable applied load for the overhang amount.
*1 Rated thrust and max. load capacity are guideline values assuming that the motor mounted will output the rated torque.

Stroke and max. speed

(mm/s)

Stroke length / Screw lead	50 to 250	300	350	400
6	300	250		
12	600	510		

*Max. speed is when the motor mounted by the customer can output rotation speed of 3000 rpm.
The max. speed is restricted by the stroke. Do not move at speeds beyond the limit.

Dimensions Straight motor mounting

● EBR-04LE

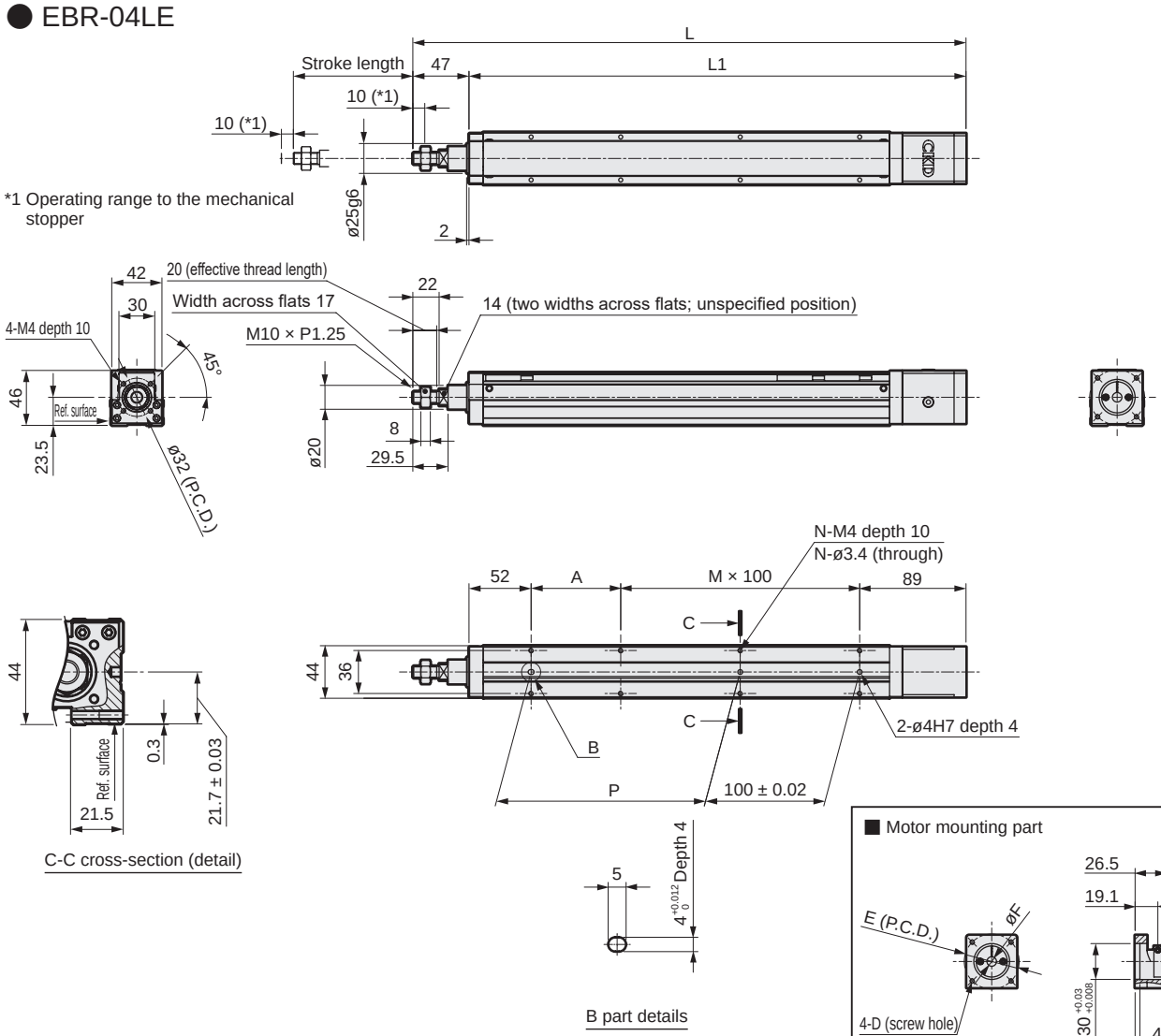

Mounted motor specification	D	E	F	Motor mounting bolt
M 50 W	M4	ø46	ø8	4-M4 × L12
Y 50 W	M4	ø46	ø8	4-M4 × L12
P 50 W	M3	ø45	ø8	4-M3 × L12
F 50 W	M4	ø46	ø8	4-M4 × L12

*When the stroke is 50 mm, in some cases sensors must be attached on both sides.

Stroke code	0050	0100	0150	0200	0250	0300	0350	0400
Stroke length (mm)	50	100	150	200	250	300	350	400
L	313	363	413	463	513	563	613	663
L1	266	316	366	416	466	516	566	616
A	25	75	25	75	25	75	25	75
M	1	1	2	2	3	3	4	4
N	6	6	8	8	10	10	12	12
P	25	75	125	175	225	275	325	375
Weight (kg)	1.1	1.2	1.4	1.6	1.7	1.9	2.0	2.2

List of attachments

[Motor mounting parts]

Mounted motor specification	Coupling	Motor mounting bolt	
		Size	Quantity
M	Assembled at shipment	M4	4
Y		M4	4
P		M3	4
F		M4	4

[Origin sensor, limit sensor]

Sensor		
Manufacturer	Model	Included quantity
KITA	KT-32N-2M	3

*Refer to page 80 for sensor specifications.

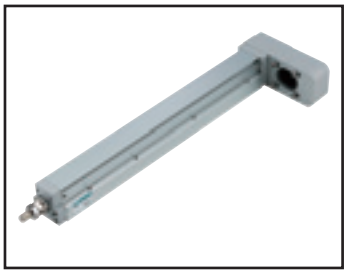

Electric actuator (motorless) Rod with built-in guide

EBR-04L*

Motor side mounting (left, right, bottom)

● Servo motor size: 50 W

RoHS

How to order

EBR - 04 L R - 00 - 06 0050 N NN - M H N N

(A) (B) (C) (D) (E) (F) (G) (H) (I) (J)

(A) Body size

04	Body width 44 mm

(B) Motor

L	None

(C) Motor mounting direction

R	Right mounting
D	Bottom mounting
L	Left mounting

(D) Screw lead

06	6 mm
12	12 mm

(E) Stroke length

0050 to 0400	50 mm (In 50 mm increments) 400 mm

(F) Brake

N	None

(G) Mounted motor specification

M Y P F	Select the mounted motor specification from the table at right.

(H) Motor size

H	50 W

(I) Origin sensor *1

N	None
C	Yes

(J) Limit sensor *1

N	None
B	Yes

Manufacturer	50 W
Mitsubishi Electric Corporation	M
Delta Electronics Co., Ltd.	M
Sanyo Denki Co., Ltd.	M
YASKAWA Electric Corporation	Y
Keyence Corporation	Y
Panasonic Corporation	P
OMRON Corporation	M
Fuji Electric Co., Ltd.	M
FANUC CORPORATION	F
Bosch Rexroth AG	P
Rockwell Automation, Inc.	M
SIEMENS AG	M

*Refer to page 49 for the motor model No.

*1 Origin sensor and limit sensor are a set. As it is both-or-nothing, select "None" for both.

Specifications

Applicable motor sizes		50 W servo motor	
Drive method		Ball screw ø10	
Stroke length	mm	50 to 400	
Screw lead	mm	6	12
Max. load capacity *1	kg Horizontal	20	12
	kg Vertical	5	2
Max. speed	mm/s	300	600
Rated thrust *1	N	141	71
Repeatability	mm	±0.01	
Lost motion	mm	0.1 or less	
Operating ambient temperature, humidity		0 to 40°C (no freezing) 35 to 80% RH (no condensation)	
Storage ambient temperature, humidity		-10 to 50°C (no freezing) 35 to 80% RH (no condensation)	
Atmosphere		No corrosive gas, explosive gas, or dust	

*Refer to pages 76 to 77 for the allowable applied load for the overhang amount.

*1 Rated thrust and max. load capacity are guideline values assuming that the motor mounted will output the rated torque.

Stroke and max. speed

(mm/s)

Screw lead \ Stroke length	50 to 250	300	350	400
6	300	250		
12	600	510		

*Max. speed is when the motor mounted by the customer can output rotation speed of 3000 rpm.
The max. speed is restricted by the stroke. Do not move at speeds beyond the limit.

Dimensions Motor right-side mounting

● EBR-04LR

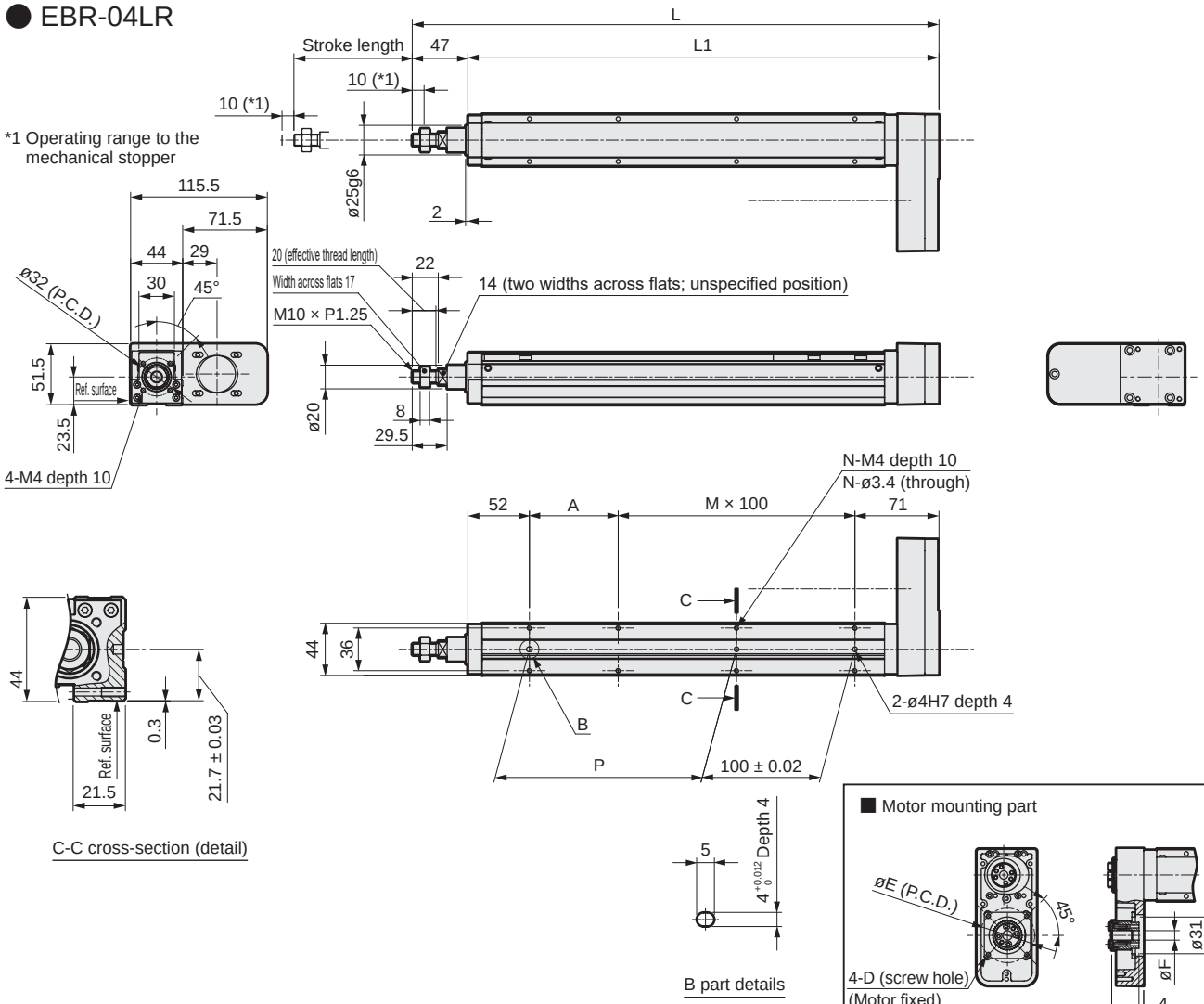

Mounted motor specification	D	E	F	Motor mounting bolt
M 50 W	M4	ø46	ø8	4-M4 × L12
Y 50 W	M4	ø46	ø8	4-M4 × L12
P 50 W	M3	ø45	ø8	4-M3 × L12
F 50 W	M4	ø46	ø8	4-M4 × L12

*When the stroke is 50 mm, in some cases sensors must be attached on both sides.

Stroke code	0050	0100	0150	0200	0250	0300	0350	0400
Stroke length (mm)	50	100	150	200	250	300	350	400
L	295	345	395	445	495	545	595	645
L1	248	298	348	398	448	498	548	598
A	25	75	25	75	25	75	25	75
M	1	1	2	2	3	3	4	4
N	6	6	8	8	10	10	12	12
P	25	75	125	175	225	275	325	375
Weight (kg)	1.3	1.5	1.6	1.8	1.9	2.1	2.2	2.4

List of attachments

[Motor mounting parts]

Mounted motor specification	Timing belt, pulley	Motor mounting bolt	
		Size	Quantity
M	Included at shipment	M4	4
Y		M4	4
P		M3	4
F		M4	4

[Origin sensor, limit sensor]

Sensor		
Manufacturer	Model	Included quantity
KITA	KT-32N-2M	3

*Refer to page 80 for sensor specifications.

Dimensions Motor bottom mounting

● EBR-04LD

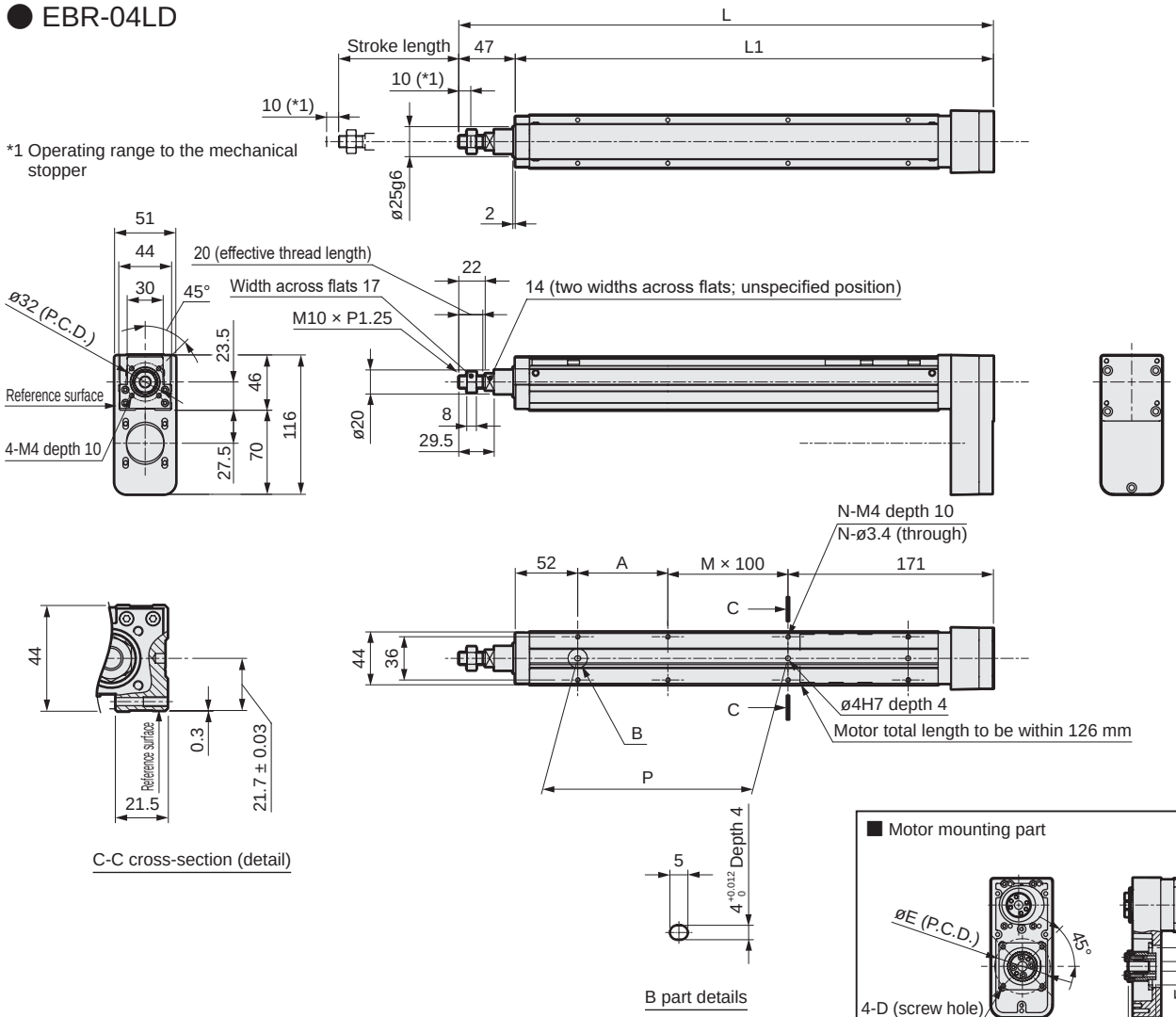

C-C cross-section (detail)

B part details

■ Motor mounting part

Mounted motor specification	D	E	F	Motor mounting bolt
M 50 W	M4	ø46	ø8	4-M4 × L12
Y 50 W	M4	ø46	ø8	4-M4 × L12
P 50 W	M3	ø45	ø8	4-M3 × L12
F 50 W	M4	ø46	ø8	4-M4 × L12

*When the stroke is 50 mm, in some cases sensors must be attached on both sides.

Stroke code	0050	0100	0150	0200	0250	0300	0350	0400
Stroke length (mm)	50	100	150	200	250	300	350	400
L	295	345	395	445	495	545	595	645
L1	248	298	348	398	448	498	548	598
A	25	75	25	75	25	75	25	75
M	0	0	1	1	2	2	3	3
N	4	4	6	6	8	8	10	10
P	25	75	125	175	225	275	325	375
Weight (kg)	1.3	1.5	1.6	1.8	1.9	2.1	2.2	2.4

List of attachments

[Motor mounting parts]

Mounted motor specification	Timing belt, pulley	Motor mounting bolt	
		Size	Quantity
M	Included at shipment	M4	4
Y		M4	4
P		M3	4
F		M4	4

[Origin sensor, limit sensor]

Sensor		
Manufacturer	Model	Included quantity
KITA	KT-32N-2M	3

*Refer to page 80 for sensor specifications.

Dimensions Motor left-side mounting

● EBR-04LL

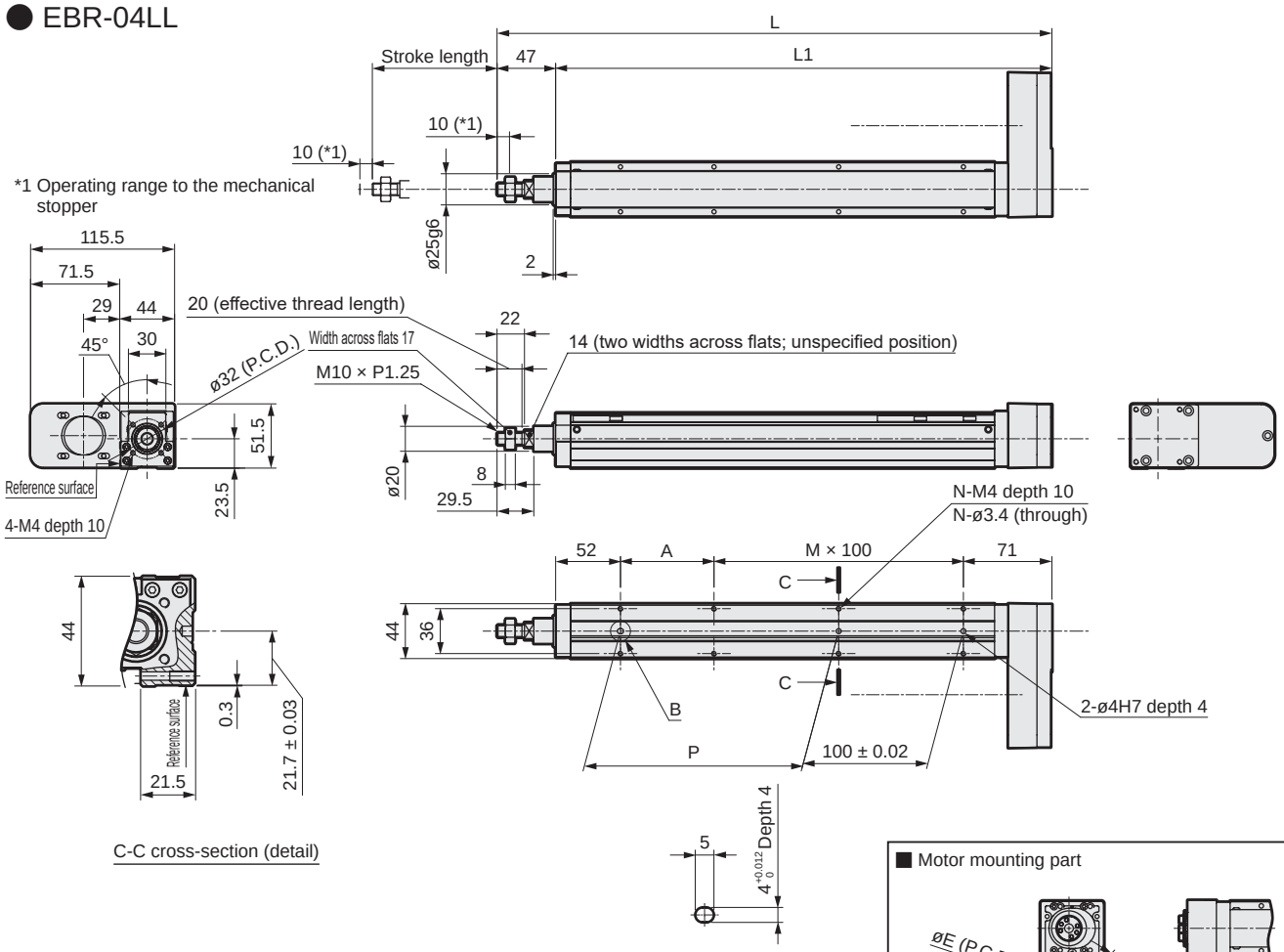

C-C cross-section (detail)

■ Motor mounting part

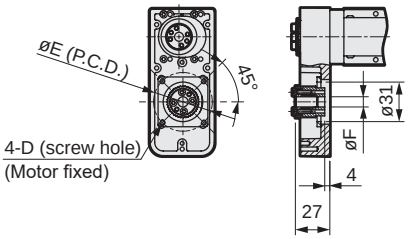

Mounted motor specification	D	E	F	Motor mounting bolt
M 50 W	M4	ø46	ø8	4-M4 × L12
Y 50 W	M4	ø46	ø8	4-M4 × L12
P 50 W	M3	ø45	ø8	4-M3 × L12
F 50 W	M4	ø46	ø8	4-M4 × L12

*When the stroke is 50 mm, in some cases sensors must be attached on both sides.

Stroke code	0050	0100	0150	0200	0250	0300	0350	0400
Stroke length (mm)	50	100	150	200	250	300	350	400
L	295	345	395	445	495	545	595	645
L1	248	298	348	398	448	498	548	598
A	25	75	25	75	25	75	25	75
M	1	1	2	2	3	3	4	4
N	6	6	8	8	10	10	12	12
P	25	75	125	175	225	275	325	375
Weight (kg)	1.3	1.5	1.6	1.8	1.9	2.1	2.2	2.4

List of attachments

[Motor mounting parts]

Mounted motor specification	Timing belt, pulley	Motor mounting bolt	
		Size	Quantity
M	Included at shipment	M4	4
Y		M4	4
P		M3	4
F		M4	4

[Origin sensor, limit sensor]

Sensor		
Manufacturer	Model	Included quantity
KITA	KT-32N-2M	3

*Refer to page 80 for sensor specifications.

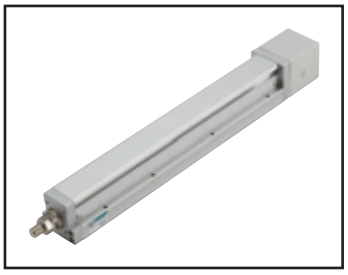

Electric actuator (motorless) Rod with built-in guide

EBR-05LE

Straight motor mounting

● Servo motor size: 100 W

RoHS

How to order

EBR - 05 L E - 00 - 02 0050 N NN - M 1 N N

(A) (B) (C) (D) (E) (F) (G) (H) (I) (J)

(A) Body size	
05	Body width 54 mm

(B) Motor	
L	None

(C) Motor mounting method	
E	Straight mounting

(D) Screw lead	
02	2 mm
05	5 mm
10	10 mm
20	20 mm

(E) Stroke length	
0050 to 0400	50 mm (In 50 mm increments) 400 mm

(F) Brake	
N	None

(G) Mounted motor specification	
M Y P F	Select the mounted motor specification from the table at right.

(H) Motor size	
1	100 W

(I) Origin sensor *1	
N	None
C	Yes

(J) Limit sensor *1	
N	None
B	Yes

Manufacturer	100 W
Mitsubishi Electric Corporation	M
Delta Electronics Co., Ltd.	M
Sanyo Denki Co., Ltd.	M
YASKAWA Electric Corporation	Y
Keyence Corporation	Y
Panasonic Corporation	P
OMRON Corporation	M
Fuji Electric Co., Ltd.	M
FANUC CORPORATION	F
Bosch Rexroth AG	P
Rockwell Automation, Inc.	M
SIEMENS AG	M

*Refer to page 49 for the motor model No.

*1 Origin sensor and limit sensor are available as a set. As it is both-or-nothing, select "None" for both.

Specifications

Applicable motor sizes		100 W servo motor			
Drive method		Ball screw ø12			
Stroke length	mm	50 to 400			
Screw lead	mm	2	5	10	20
Max. load capacity *1	Horizontal	30	30	15	10
	Vertical	10	10	5	2.5
Max. speed	mm/s	100	250	500	1000
Rated thrust *1	N	854	341	170	85
Repeatability	mm	±0.01			
Lost motion	mm	0.1 or less			
Operating ambient temperature, humidity		0 to 40°C (no freezing) 35 to 80% RH (no condensation)			
Storage ambient temperature, humidity		-10 to 50°C (no freezing) 35 to 80% RH (no condensation)			
Atmosphere		No corrosive gas, explosive gas, or dust			

*Refer to pages 76 to 77 for the allowable applied load for the overhang amount.

*1 Rated thrust and max. load capacity are guideline values assuming that the motor mounted will output the rated torque.

Stroke and max. speed

(mm/s)

Screw lead \ Stroke length	50 to 250	300 to 400
2	100	85
5	250	200
10	500	400
20	1000	850

*Max. speed is when the motor mounted by the customer can output rotation speed of 3000 rpm.
The max. speed is restricted by the stroke. Do not move at speeds beyond the limit.

Dimensions Straight motor mounting

● EBR-05LE

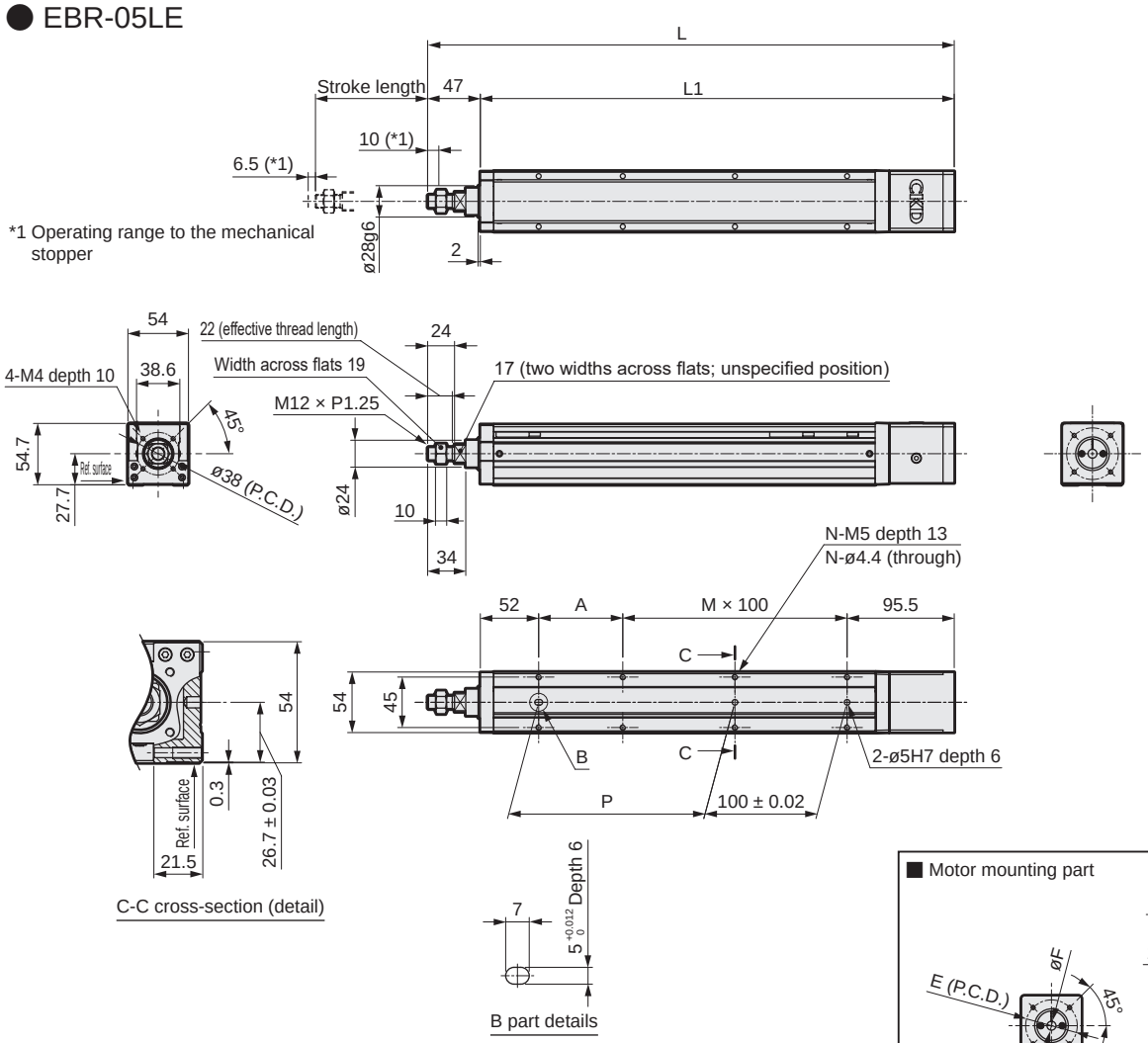

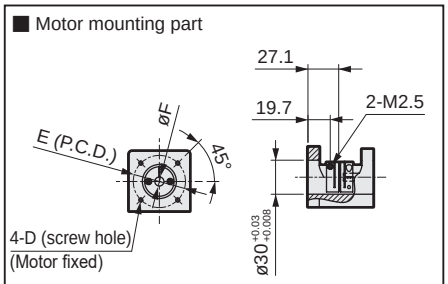

Mounted motor specification	D	E	F	Motor mounting bolt
M 100 W	M4	ø46	ø8	4-M4 × L12
Y 100 W	M4	ø46	ø8	4-M4 × L12
P 100 W	M3	ø45	ø8	4-M3 × L12
F 100 W	M4	ø46	ø8	4-M4 × L12

*When the stroke is 50 mm, in some cases sensors must be attached on both sides.

Stroke code	0050	0100	0150	0200	0250	0300	0350	0400
Stroke length (mm)	50	100	150	200	250	300	350	400
L	319.5	369.5	419.5	469.5	519.5	569.5	619.5	669.5
L1	272.5	322.5	372.5	422.5	472.5	522.5	572.5	622.5
A	25	75	25	75	25	75	25	75
M	1	1	2	2	3	3	4	4
N	6	6	8	8	10	10	12	12
P	25	75	125	175	225	275	325	375
Weight (kg)	1.7	1.9	2.1	2.3	2.5	2.7	2.9	3.0

List of attachments

[Motor mounting parts]

Mounted motor specification	Coupling	Motor mounting bolt	
		Size	Quantity
M	Assembled at shipment	M4	4
Y		M4	4
P		M3	4
F		M4	4

[Origin sensor, limit sensor]

Manufacturer	Model	Included quantity
KITA	KT-32N-2M	3

*Refer to page 80 for sensor specifications.



Electric actuator (motorless) Rod with built-in guide

EBR-05L*

Motor side mounting (left, right, bottom)

● Servo motor size: 100 W

RoHS

How to order

EBR - 05 L R - 00 - 02 0050 N NN - M 1 N N

(A) (B) (C) (D) (E) (F) (G) (H) (I) (J)

(A) Body size

05	Body width 54 mm

(B) Motor

L	None

(C) Motor mounting direction

R	Right mounting
D	Bottom mounting
L	Left mounting

(D) Screw lead

02	2 mm
05	5 mm
10	10 mm
20	20 mm

(E) Stroke length

0050 to 0400	50 mm (In 50 mm increments) 400 mm

(F) Brake

N	None

(G) Mounted motor specification

M Y P F	Select the mounted motor specification from the table at right.

(H) Motor size

1	100 W

(I) Origin sensor *1

N	None
C	Yes

(J) Limit sensor *1

N	None
B	Yes

Manufacturer	100 W
Mitsubishi Electric Corporation	M
Delta Electronics Co., Ltd.	M
Sanyo Denki Co., Ltd.	M
YASKAWA Electric Corporation	Y
Keyence Corporation	Y
Panasonic Corporation	P
OMRON Corporation	M
Fuji Electric Co., Ltd.	M
FANUC CORPORATION	F
Bosch Rexroth AG	P
Rockwell Automation, Inc.	M
SIEMENS AG	M

*Refer to page 49 for the motor model No.

*1 Origin sensor and limit sensor are available as a set. As it is both-or-nothing, select "None" for both.

Specifications

Applicable motor sizes		100 W servo motor			
Drive method		Ball screw ø12			
Stroke length	mm	50 to 400			
Screw lead		2	5	10	20
Max. load capacity *1	kg Horizontal	30	30	15	10
	Vertical	10	10	5	2.5
Max. speed	mm/s	100	250	500	1000
Rated thrust *1	N	854	341	170	85
Repeatability	mm	±0.01			
Lost motion	mm	0.1 or less			
Operating ambient temperature, humidity		0 to 40°C (no freezing) 35 to 80% RH (no condensation)			
Storage ambient temperature, humidity		-10 to 50°C (no freezing) 35 to 80% RH (no condensation)			
Atmosphere		No corrosive gas, explosive gas, or dust			

*Refer to pages 76 to 77 for the allowable applied load for the overhang amount.

*1 Rated thrust and max. load capacity are guideline values assuming that the motor mounted will output the rated torque.

Stroke and max. speed

(mm/s)

Lead \ Stroke length	50 to 250	300	350	400
2	100	85		
5	250	200		
10	500	400		
20	1000	850		

*Max. speed is when the motor mounted by the customer can output rotation speed of 3000 rpm.
The max. speed is restricted by the stroke. Do not move at speeds beyond the limit.
Use Lead 2 at 0.5 G or less.

Dimensions Motor right-side mounting

● EBR-05LR

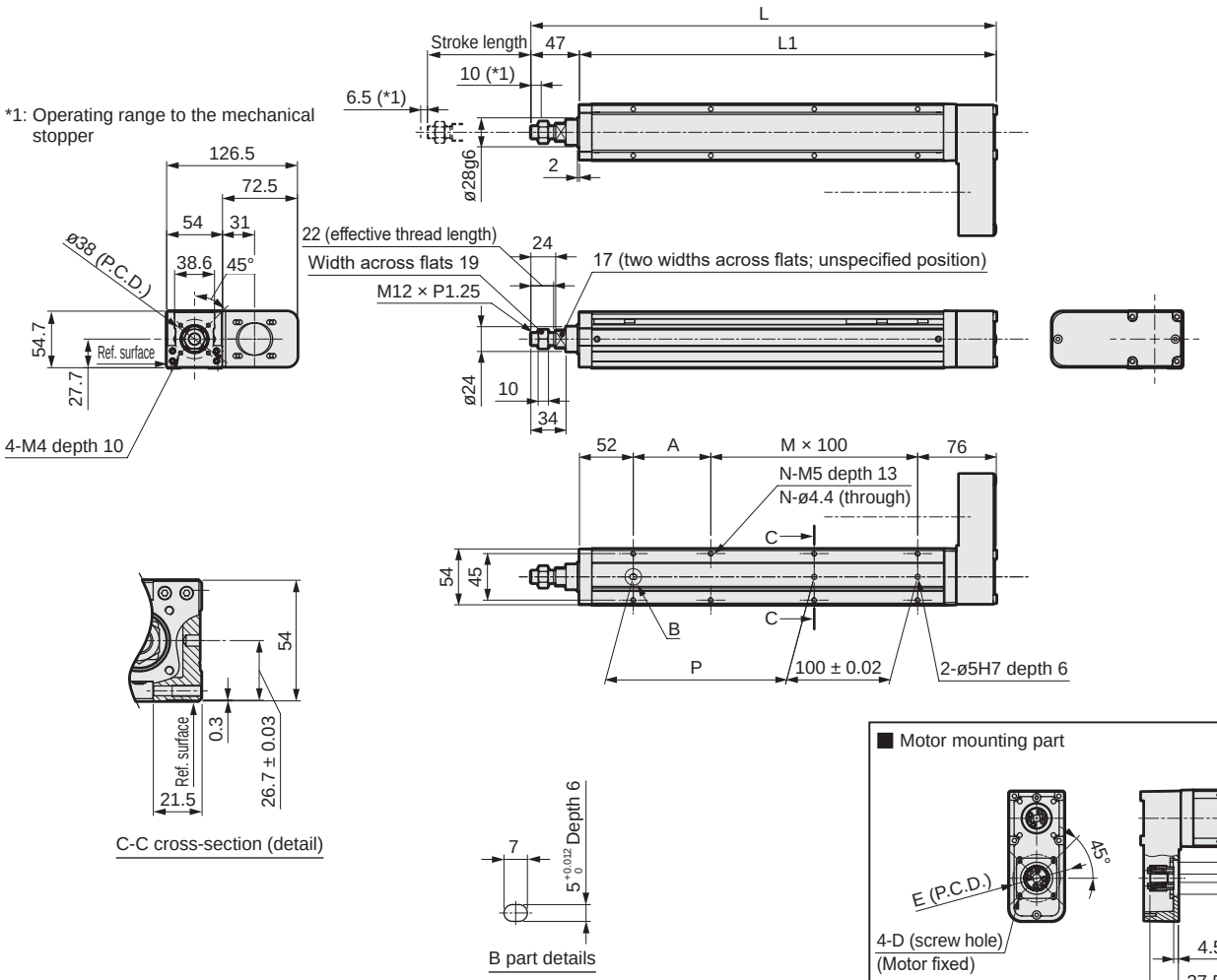

Mounted motor specification	D	E	F	Motor screw
M 100 W	M4	ø46	ø8	4-M4 × L12
Y 100 W	M4	ø46	ø8	4-M4 × L12
P 100 W	M3	ø45	ø8	4-M3 × L12
F 100 W	M4	ø46	ø8	4-M4 × L12

*When the stroke is 50 mm, in some cases sensors must be attached on both sides.

Stroke code	0050	0100	0150	0200	0250	0300	0350	0400
Stroke length (mm)	50	100	150	200	250	300	350	400
L	300	350	400	450	500	550	600	650
L1	253	303	353	403	453	503	553	603
A	25	75	25	75	25	75	25	75
M	1	1	2	2	3	3	4	4
N	6	6	8	8	10	10	12	12
P	25	75	125	175	225	275	325	375
Weight (kg)	1.9	2.1	2.3	2.5	2.7	2.9	3.1	3.2

List of attachments

[Motor mounting]

Mounted motor specification	Timing belt, pulley	Motor mounting bolt	
		Size	Included quantity
M	Included at shipment	M4	4
Y		M4	4
P		M3	4
F		M4	4

[When origin/limit sensors are selected]

Sensor		
Manufacturer	Model	Included quantity
KITA	KT-32N-2M	3

*Refer to page 80 for sensor specifications.

Dimensions Motor bottom mounting

● EBR-05LD

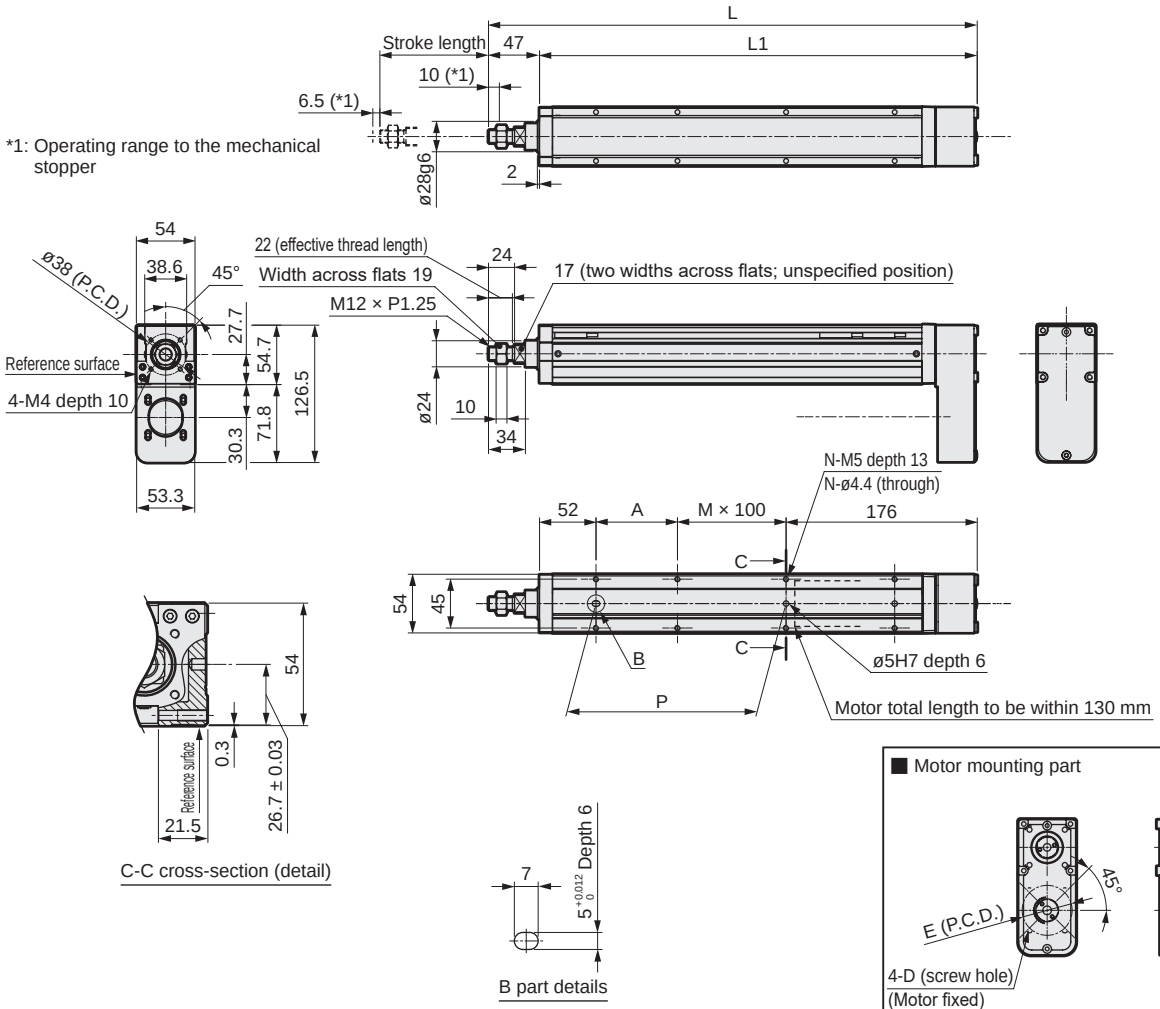

■ Motor mounting part

Mounted motor specification	D	E	F	Motor screw
M 100 W	M4	ø46	ø8	4-M4 × L12
Y 100 W	M4	ø46	ø8	4-M4 × L12
P 100 W	M3	ø45	ø8	4-M3 × L12
F 100 W	M4	ø46	ø8	4-M4 × L12

*When the stroke is 50 mm, in some cases sensors must be attached on both sides.

Stroke code	0050	0100	0150	0200	0250	0300	0350	0400
Stroke length (mm)	50	100	150	200	250	300	350	400
L	300	350	400	450	500	550	600	650
L1	253	303	353	403	453	503	553	603
A	25	75	25	75	25	75	25	75
M	0	0	1	1	2	2	3	3
N	4	4	6	6	8	8	10	10
P	25	75	125	175	225	275	325	375
Weight (kg)	1.9	2.1	2.3	2.5	2.7	2.9	3.1	3.2

List of attachments

[Motor mounting]

Mounted motor specification	Timing belt, pulley	Motor mounting bolt	
		Size	Included quantity
M	Included at shipment	M4	4
Y		M4	4
P		M3	4
F		M4	4

[When origin/limit sensors are selected]

Sensor		
Manufacturer	Model	Included quantity
KITA	KT-32N-2M	3

*Refer to page 80 for sensor specifications.

Dimensions Motor left-side mounting

● EBR-05LL

*1: Operating range to the mechanical stopper

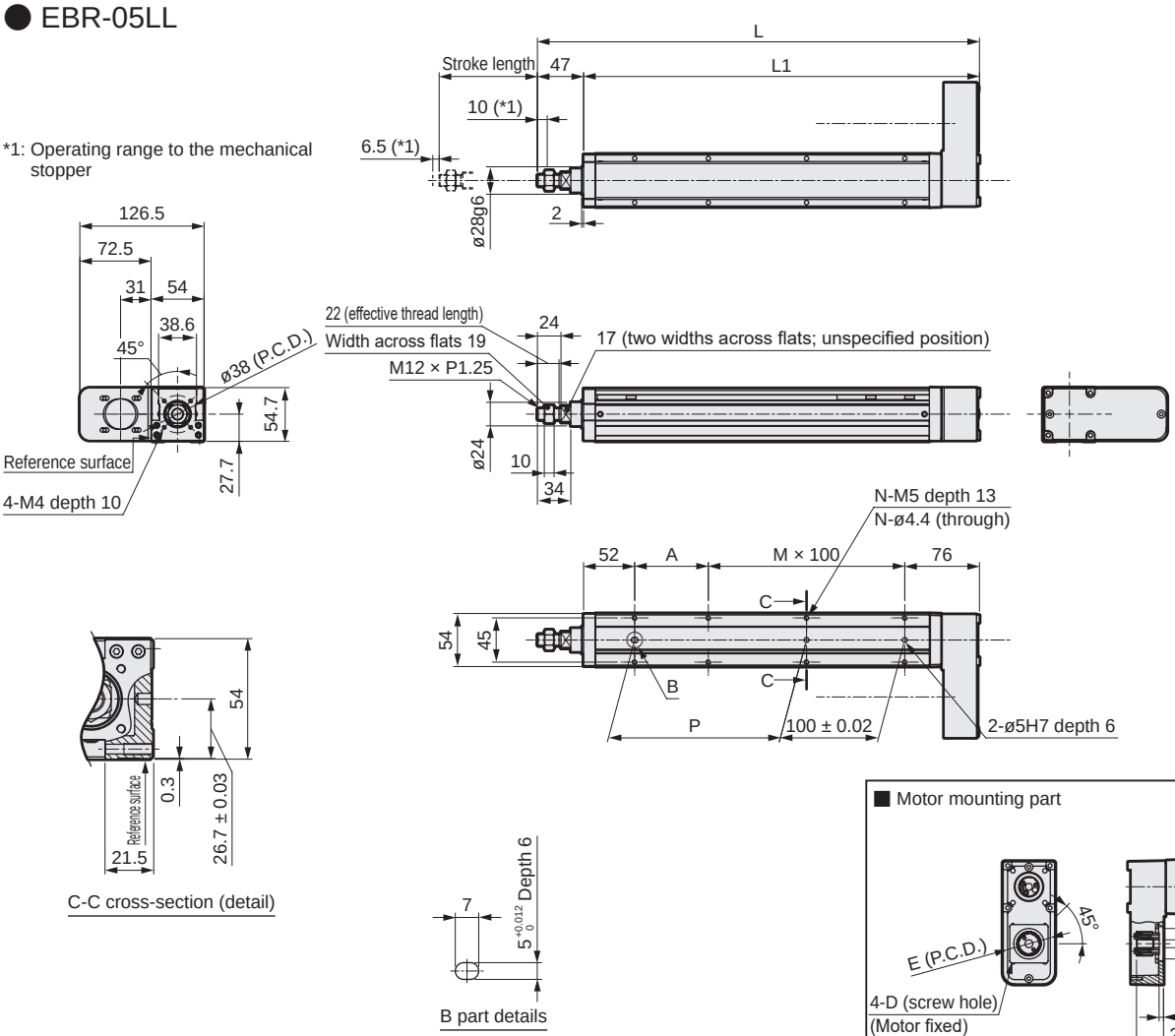

■ Motor mounting part

Mounted motor specification	D	E	F	Motor screw
M 100 W	M4	ø46	ø8	4-M4 × L12
Y 100 W	M4	ø46	ø8	4-M4 × L12
P 100 W	M3	ø45	ø8	4-M3 × L12
F 100 W	M4	ø46	ø8	4-M4 × L12

*When the stroke is 50 mm, in some cases sensors must be attached on both sides.

Stroke code	0050	0100	0150	0200	0250	0300	0350	0400
Stroke length (mm)	50	100	150	200	250	300	350	400
L	300	350	400	450	500	550	600	650
L1	253	303	353	403	453	503	553	603
A	25	75	25	75	25	75	25	75
M	1	1	2	2	3	3	4	4
N	6	6	8	8	10	10	12	12
P	25	75	125	175	225	275	325	375
Weight (kg)	1.9	2.1	2.3	2.5	2.7	2.9	3.1	3.2

List of attachments

[Motor mounting]

Mounted motor specification	Timing belt, pulley	Motor mounting bolt	
		Size	Included quantity
M	Included at shipment	M4	4
Y		M4	4
P		M3	4
F		M4	4

[When origin/limit sensors are selected]

Sensor		
Manufacturer	Model	Included quantity
KITA	KT-32N-2M	3

*Refer to page 80 for sensor specifications.

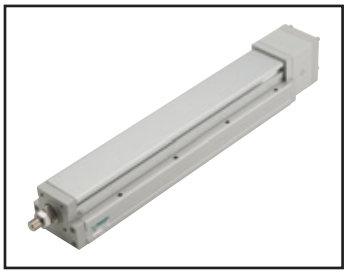

Electric actuator (motorless) Rod with built-in guide

EBR-08LE

Straight motor mounting

● Servo motor size: 200 W

RoHS

How to order

EBR - 08 L E - 00 - 05 0050 N NN - M 2 N N

(A) (B) (C) (D) (E) (F) (G) (H) (I) (J)

(A) Body size

08	Body width 82 mm

(B) Motor

L	None

(C) Motor mounting direction

E	Straight mounting

(D) Screw lead

05	5 mm
10	10 mm
20	20 mm

(E) Stroke length

0050 to 0700	50 mm (In 50 mm increments) 700 mm

(F) Brake

N	None

(G) Mounted motor specification

M	Select the mounted motor specification from the table at right.
Y	
P	
F	

(H) Motor size

2	200 W

(I) Origin sensor *1

N	None
C	Yes

(J) Limit sensor *1

N	None
B	Yes

Manufacturer	200 W
Mitsubishi Electric Corporation	M
Delta Electronics Co., Ltd.	M
Sanyo Denki Co., Ltd.	M
YASKAWA Electric Corporation	Y
Keyence Corporation	Y
Panasonic Corporation	P
OMRON Corporation	P
Fuji Electric Co., Ltd.	M
FANUC CORPORATION	F
Bosch Rexroth AG	P
Rockwell Automation, Inc.	M
SIEMENS AG	M

*Refer to page 49 for the motor model No.

*1 Origin sensor and limit sensor are available as a set. As it is both-or-nothing, select "None" for both.

Specifications

Applicable motor sizes		200 W servo motor		
Drive method		Ball screw ø16		
Stroke length	mm	50 to 700		
Screw lead	mm	5	10	20
Max. load capacity *1	kg Horizontal	50	30	12
	kg Vertical	15	8	2.5
Max. speed	mm/s	250	500	1000
Rated thrust *1	N	683	341	174
Repeatability	mm	±0.01		
Lost motion	mm	0.1 or less		
Operating ambient temperature, humidity		0 to 40°C (no freezing) 35 to 80% RH (no condensation)		
Storage ambient temperature, humidity		-10 to 50°C (no freezing) 35 to 80% RH (no condensation)		
Atmosphere		No corrosive gas, explosive gas, or dust		

*Refer to pages 76 to 77 for the allowable applied load for the overhang amount.
*1 Rated thrust and max. load capacity are guideline values assuming that the motor mounted will output the rated torque.

Stroke and max. speed

(mm/s)

Screw lead \ Stroke length	50 to 300	350 to 700
5	250	200
10	500	400
20	1000	850

*Max. speed is when the motor mounted by the customer can output rotation speed of 3000 rpm.
The max. speed is restricted by the stroke. Do not move at speeds beyond the limit.

Dimensions Straight motor mounting

● EBR-08LE

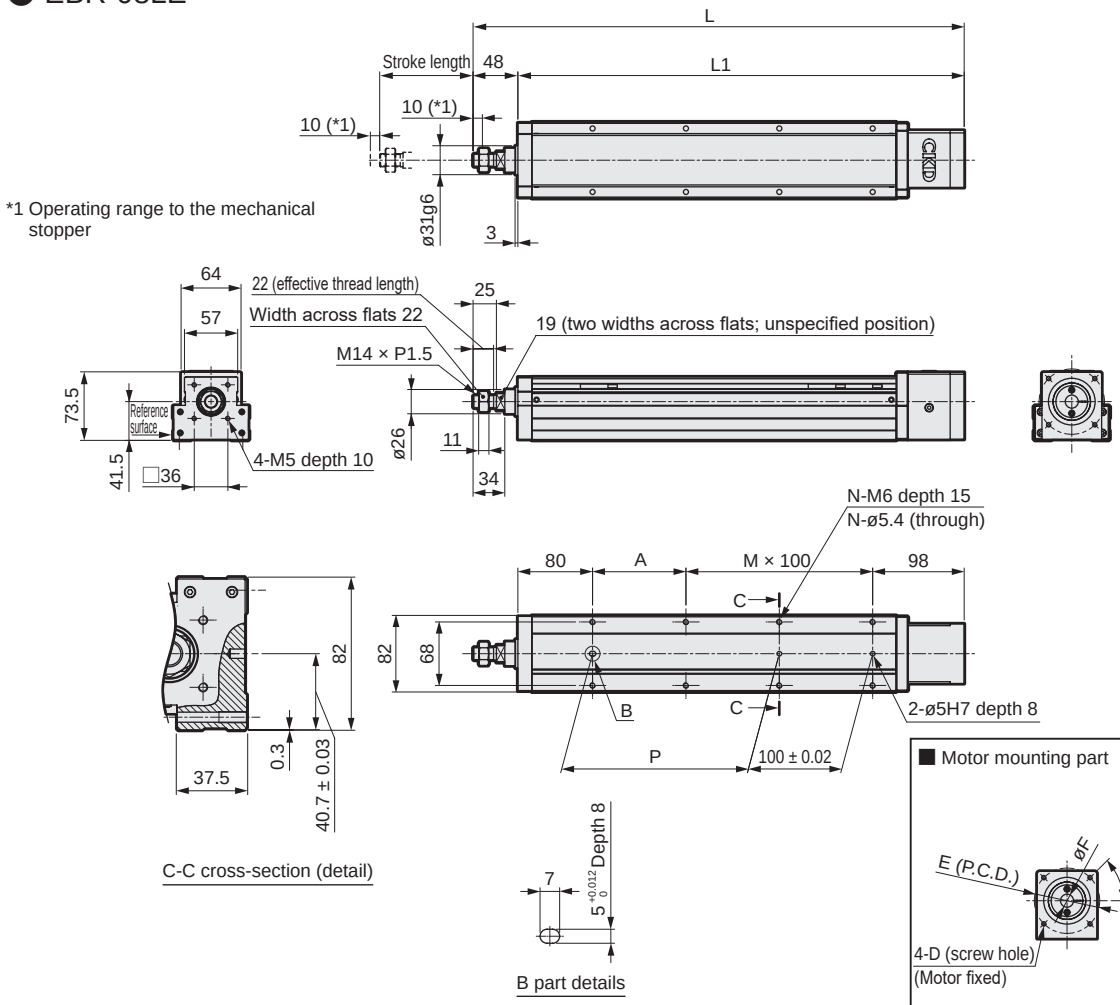

■ Motor mounting part

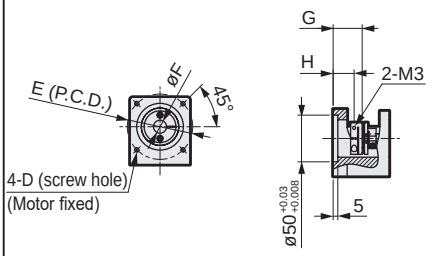

Mounted motor specification	D	E	F	G	H	Motor mounting bolt
M 200 W	M5	ø70	ø14	31.1	22.5	4-M5 × L18
Y 200 W	M5	ø70	ø14	31.1	22.5	4-M5 × L18
P 200 W	M4	ø70	ø11	31.1	22.5	4-M4 × L18
F 200 W	M5	ø70	ø9	29.1	20.5	4-M5 × L16

*When the stroke is 50 mm, in some cases sensors must be attached on both sides.

Stroke code	0050	0100	0150	0200	0250	0300	0350	0400	0450	0500	0550	0600	0650	0700
Stroke length (mm)	50	100	150	200	250	300	350	400	450	500	550	600	650	700
L	376	426	476	526	576	626	676	726	776	826	876	926	976	1026
L1	328	378	428	478	528	578	628	678	728	778	828	878	928	978
A	50	100	50	100	50	100	50	100	50	100	50	100	50	100
M	1	1	2	2	3	3	4	4	5	5	6	6	7	7
N	6	6	8	8	10	10	12	12	14	14	16	16	18	18
P	50	100	150	200	250	300	350	400	450	500	550	600	650	700
Weight (kg)	4.0	4.4	4.8	5.1	5.5	5.9	6.3	6.6	7.0	7.4	7.7	8.1	8.5	8.8

List of attachments

[Motor mounting parts]

Mounted motor specification	Coupling	Motor mounting bolt	
		Size	Quantity
M	Assembled at shipment	M4	4
Y		M4	4
P		M3	4
F		M4	4

[Origin sensor, limit sensor]

Manufacturer	Model	Included quantity
KITA	KT-32N-2M	3

*Refer to page 80 for sensor specifications.

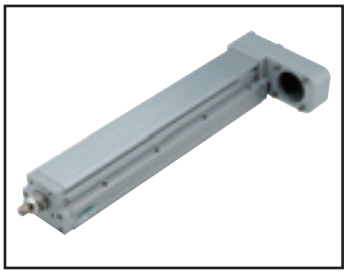

Electric actuator (motorless) Rod with built-in guide

EBR-08L*

Motor side mounting (left, right, bottom)

● Servo motor size: 200 W

RoHS

How to order

EBR - 08 L R - 00 - 05 0050 N NN - M 2 N N

(A) (B) (C) (D) (E) (F) (G) (H) (I) (J)

(A) Body size

08	Body width 82 mm

(B) Motor

L	None

(C) Motor mounting direction

R	Right mounting
D	Bottom mounting
L	Left mounting

(D) Screw lead

05	5 mm
10	10 mm
20	20 mm

(E) Stroke length

0050 to 0700	50 mm (In 50 mm increments) 700 mm

(F) Brake

N	None

(G) Mounted motor specification

M	Select the mounted motor specification from the table at right.
Y	
P	
F	

(H) Motor size

2	200 W

(I) Origin sensor *1

N	None
C	Yes

(J) Limit sensor *1

N	None
B	Yes

Manufacturer	200 W
Mitsubishi Electric Corporation	M
Delta Electronics Co., Ltd.	M
Sanyo Denki Co., Ltd.	M
YASKAWA Electric Corporation	Y
Keyence Corporation	Y
Panasonic Corporation	P
OMRON Corporation	P
Fuji Electric Co., Ltd.	M
FANUC CORPORATION	F
Bosch Rexroth AG	P
Rockwell Automation, Inc.	M
SIEMENS AG	M

*Refer to page 49 for the motor model No.

*1 Origin sensor and limit sensor are available as a set. As it is both-or-nothing, select "None" for both.

Specifications

Applicable motor sizes		200 W servo motor		
Drive method		Ball screw ø16		
Stroke length	mm	50 to 700		
Screw lead		5	10	20
Max. load capacity	kg Horizontal	50	30	12
	kg Vertical	15	8	2.5
Max. speed	mm/s	250	500	1000
Rated thrust	N	683	341	174
Repeatability	mm	±0.01		
Lost motion	mm	0.1 or less		
Operating ambient temperature, humidity		0 to 40°C (no freezing) 35 to 80% RH (no condensation)		
Storage ambient temperature, humidity		-10 to 50°C (no freezing) 35 to 80% RH (no condensation)		
Atmosphere		No corrosive gas, explosive gas, or dust		

*Refer to pages 76 to 77 for the allowable applied load for the overhang amount.

*1 Rated thrust and max. load capacity are guideline values assuming that the motor mounted will output the rated torque.

Stroke and max. speed

(mm/s)

Lead \ Stroke length	50 to 300	350	400	450	500	550	600	650	700
5	250	200							
10	500	400							
20	1000	850							

*Max. speed is when the motor mounted by the customer can output rotation speed of 3000 rpm.
The max. speed is restricted by the stroke. Do not move at speeds beyond the limit.

Dimensions Motor right-side mounting

● EBR-08LR

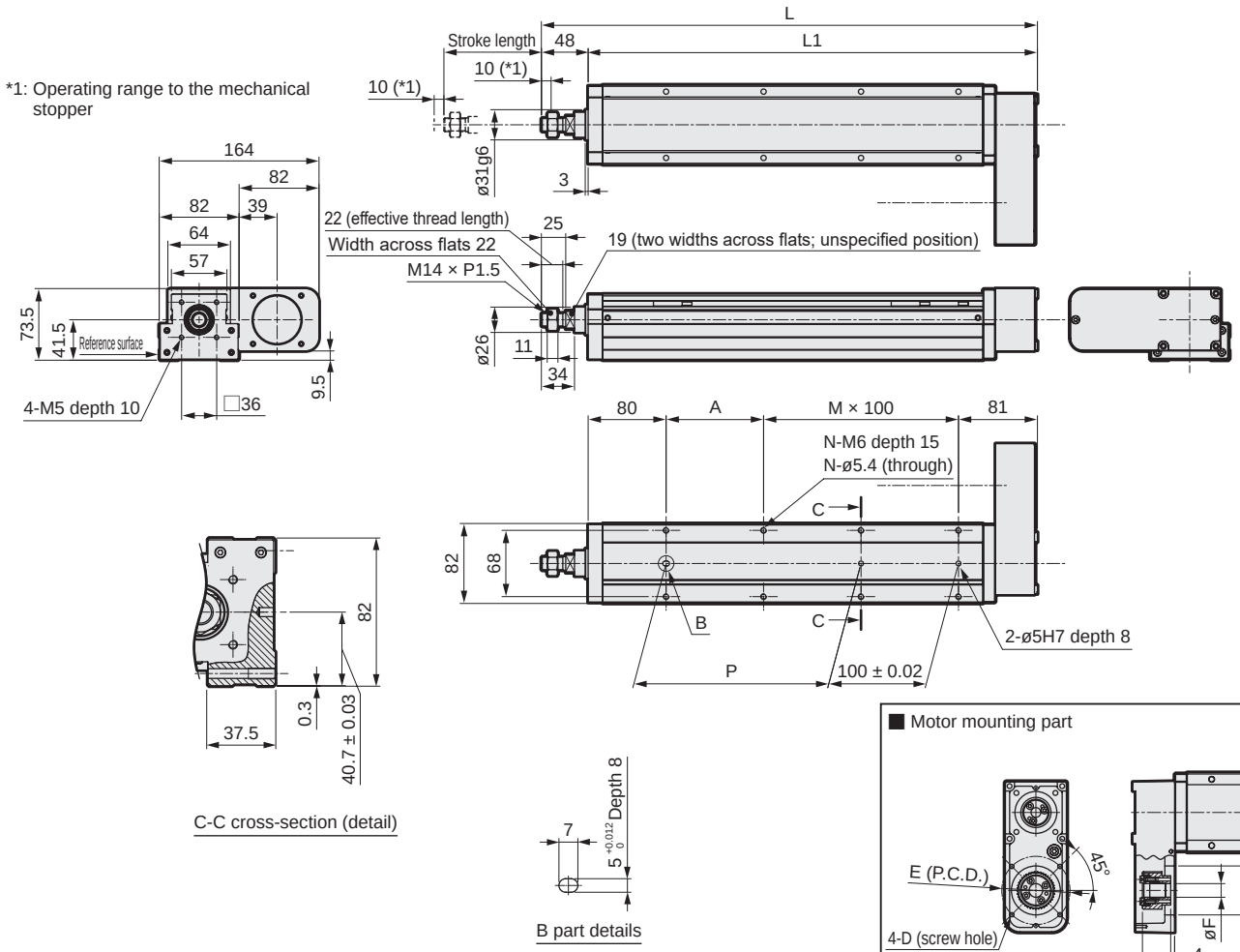

■ Motor mounting part

Mounted motor specification	D	E	F	Motor screw
M 200 W	M5	ø70	ø14	4-M5 × L18
Y 200 W	M5	ø70	ø14	4-M5 × L18
P 200 W	M4	ø70	ø11	4-M4 × L18
F 200 W	M5	ø70	ø9	4-M5 × L16

*When the stroke is 50 mm, in some cases sensors must be attached on both sides.

Stroke code	0050	0100	0150	0200	0250	0300	0350	0400	0450	0500	0550	0600	0650	0700
Stroke length (mm)	50	100	150	200	250	300	350	400	450	500	550	600	650	700
L	359	409	459	509	559	609	659	709	759	809	859	909	959	1009
L1	311	361	411	461	511	561	611	661	711	761	811	861	911	961
A	50	100	50	100	50	100	50	100	50	100	50	100	50	100
M	1	1	2	2	3	3	4	4	5	5	6	6	7	7
N	6	6	8	8	10	10	12	12	14	14	16	16	18	18
P	50	100	150	200	250	300	350	400	450	500	550	600	650	700
Weight (kg)	4.4	4.8	5.1	5.5	5.9	6.2	6.6	7.0	7.3	7.7	8.1	8.4	8.8	9.1

List of attachments

[Motor mounting]

Mounted motor specification	Timing belt, pulley	Motor mounting bolt	
		Size	Included quantity
M	Included at shipment	M4	4
Y		M4	4
P		M3	4
F		M4	4

[When origin/limit sensors are selected]

Sensor		
Manufacturer	Model	Included quantity
KITA	KT-32N-2M	3

*Refer to page 80 for sensor specifications.

Dimensions Motor bottom mounting

● EBR-08LD

*1: Operating range to the mechanical stopper

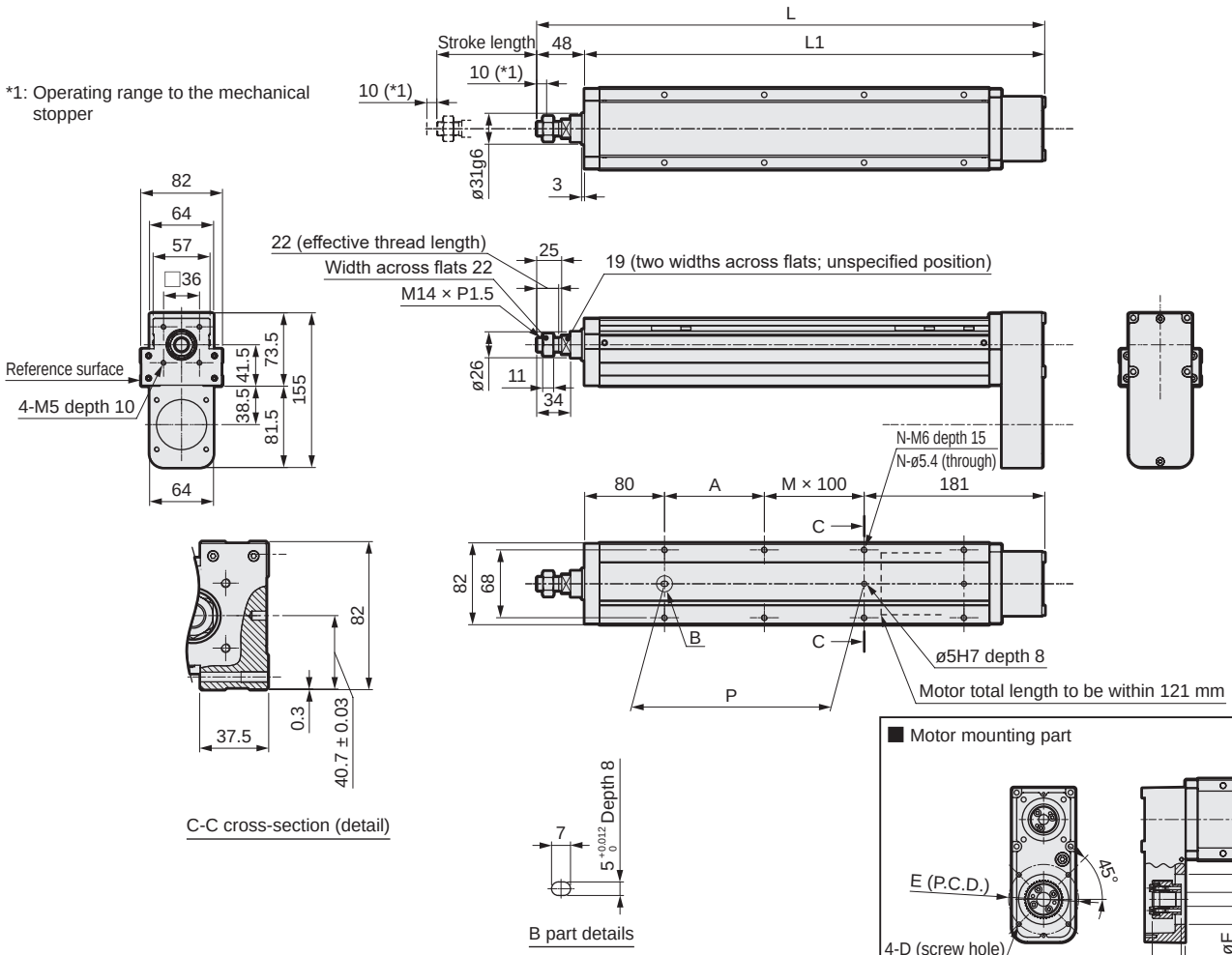

■ Motor mounting part

Mounted motor specification	D	E	F	Motor screw
M 200 W	M5	ø70	ø14	4-M5 × L18
Y 200 W	M5	ø70	ø14	4-M5 × L18
P 200 W	M4	ø70	ø11	4-M4 × L18
F 200 W	M5	ø70	ø9	4-M5 × L16

*When the stroke is 50 mm, in some cases sensors must be attached on both sides.

Stroke code	0050	0100	0150	0200	0250	0300	0350	0400	0450	0500	0550	0600	0650	0700
Stroke length (mm)	50	100	150	200	250	300	350	400	450	500	550	600	650	700
L	359	409	459	509	559	609	659	709	759	809	859	909	959	1009
L1	311	361	411	461	511	561	611	661	711	761	811	861	911	961
A	50	100	50	100	50	100	50	100	50	100	50	100	50	100
M	0	0	1	1	2	2	3	3	4	4	5	5	6	6
N	4	4	6	6	8	8	10	10	12	12	14	14	16	16
P	50	100	150	200	250	300	350	400	450	500	550	600	650	700
Weight (kg)	4.4	4.8	5.1	5.5	5.9	6.2	6.6	7.0	7.3	7.7	8.1	8.4	8.8	9.1

List of attachments

[Motor mounting]

Mounted motor specification	Timing belt, pulley	Motor mounting bolt	
		Size	Included quantity
M	Included at shipment	M4	4
Y		M4	4
P		M3	4
F		M4	4

[When origin/limit sensors are selected]

Sensor		
Manufacturer	Model	Included quantity
KITA	KT-32N-2M	3

*Refer to page 80 for sensor specifications.

Dimensions Motor left-side mounting

● EBR-08LL

*1: Operating range to the mechanical stopper

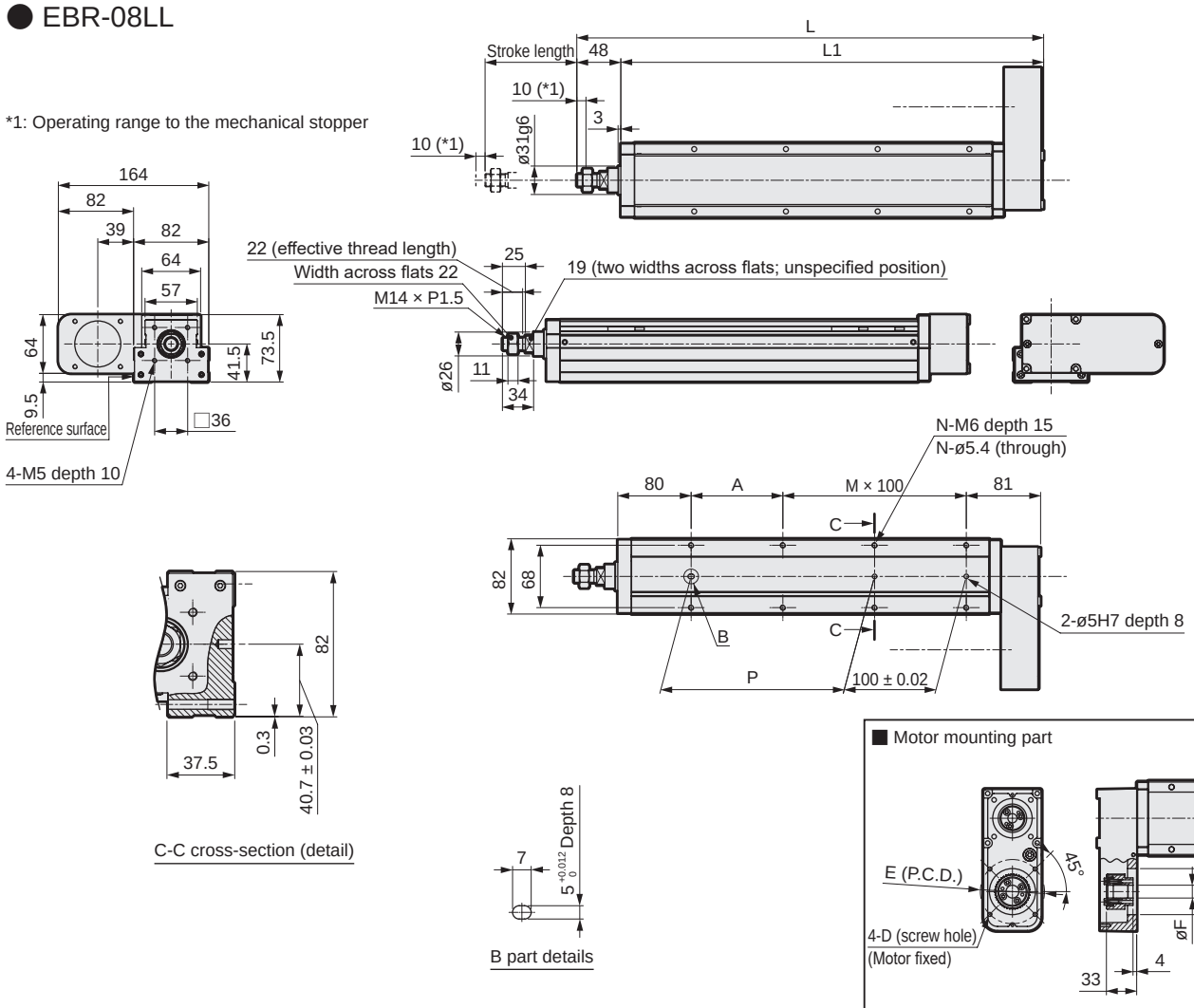

■ Motor mounting part

Mounted motor specification	D	E	F	Motor screw
M 200 W	M5	ø70	ø14	4-M5 × L18
Y 200 W	M5	ø70	ø14	4-M5 × L18
P 200 W	M4	ø70	ø11	4-M4 × L18
F 200 W	M5	ø70	ø9	4-M5 × L16

*When the stroke is 50 mm, in some cases sensors must be attached on both sides.

Stroke code	0050	0100	0150	0200	0250	0300	0350	0400	0450	0500	0550	0600	0650	0700
Stroke length (mm)	50	100	150	200	250	300	350	400	450	500	550	600	650	700
L	359	409	459	509	559	609	659	709	759	809	859	909	959	1009
L1	311	361	411	461	511	561	611	661	711	761	811	861	911	961
A	50	100	50	100	50	100	50	100	50	100	50	100	50	100
M	1	1	2	2	3	3	4	4	5	5	6	6	7	7
N	6	6	8	8	10	10	12	12	14	14	16	16	18	18
P	50	100	150	200	250	300	350	400	450	500	550	600	650	700
Weight (kg)	4.4	4.8	5.1	5.5	5.9	6.2	6.6	7.0	7.3	7.7	8.1	8.4	8.8	9.1

List of attachments

[Motor mounting]

Mounted motor specification	Timing belt, pulley	Motor mounting bolt	
		Size	Included quantity
M	Included at shipment	M4	4
Y		M4	4
P		M3	4
F		M4	4

[When origin/limit sensors are selected]

Sensor		
Manufacturer	Model	Included quantity
KITA	KT-32N-2M	3

*Refer to page 80 for sensor specifications.

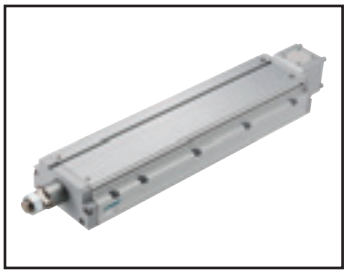

Electric actuator (motorless) Rod with built-in guide

EBR-12LE

Straight motor mounting

● Servo motor size: 400 W

RoHS

How to order

EBR - 12 L E - 00 - 05 0050 N NN - M 4 N N

(A) (B) (C) (D) (E) (F) (G) (H) (I) (J)

(A) Body size

12	Body width 120 mm

(B) Motor

L	None

(C) Motor mounting direction

E	Straight mounting

(D) Screw lead

05	5 mm
10	10 mm
20	20 mm
32	32 mm

(E) Stroke length

0050 to 0800	50 mm (In 50 mm increments) 800 mm

(F) Brake

N	None

(G) Mounted motor specification

M	Select the mounted motor specification from the table at right.
Y	
P	

(H) Motor size

4	400 W

(I) Origin sensor *1

N	None
C	Yes

(J) Limit sensor *1

N	None
B	Yes

Manufacturer	400 W
Mitsubishi Electric Corporation	M
Delta Electronics Co., Ltd.	M
Sanyo Denki Co., Ltd.	M
YASKAWA Electric Corporation	Y
Keyence Corporation	Y
Panasonic Corporation	P
OMRON Corporation	P
Fuji Electric Co., Ltd.	M
Bosch Rexroth AG	P
Rockwell Automation, Inc.	M
SIEMENS AG	M

*Refer to page 49 for the motor model No.

*1 Origin sensor and limit sensor are available as a set. As it is both-or-nothing, select "None" for both.

Specifications

Applicable motor sizes		400 W servo motor			
Drive method		Ball screw ø16			
Stroke length	mm	50 to 800			
Screw lead	mm	5	10	20	32
Max. load capacity *1	kg Horizontal	110	88	40	30
	kg Vertical	33	22	10	8
Max. speed	mm/s	250	500	1000	1600
Rated thrust *1	N	1388	694	347	218
Repeatability	mm	±0.01			
Lost motion	mm	0.1 or less			
Operating ambient temperature, humidity		0 to 40°C (no freezing) 35 to 80% RH (no condensation)			
Storage ambient temperature, humidity		-10 to 50°C (no freezing) 35 to 80% RH (no condensation)			
Atmosphere		No corrosive gas, explosive gas, or dust			

*Refer to pages 76 to 77 for the allowable applied load for the overhang amount.
*1 Rated thrust and max. load capacity are guideline values assuming that the motor mounted will output the rated torque.

Stroke and max. speed

(mm/s)

Stroke length / Screw lead	50 to 300	350 to 800
5	250	200
10	500	400
20	1000	850
32	1600	1350

*Max. speed is when the motor mounted by the customer can output rotation speed of 3000 rpm.
The max. speed is restricted by the stroke. Do not move at speeds beyond the limit.

Dimensions Straight motor mounting

● EBR-12LE

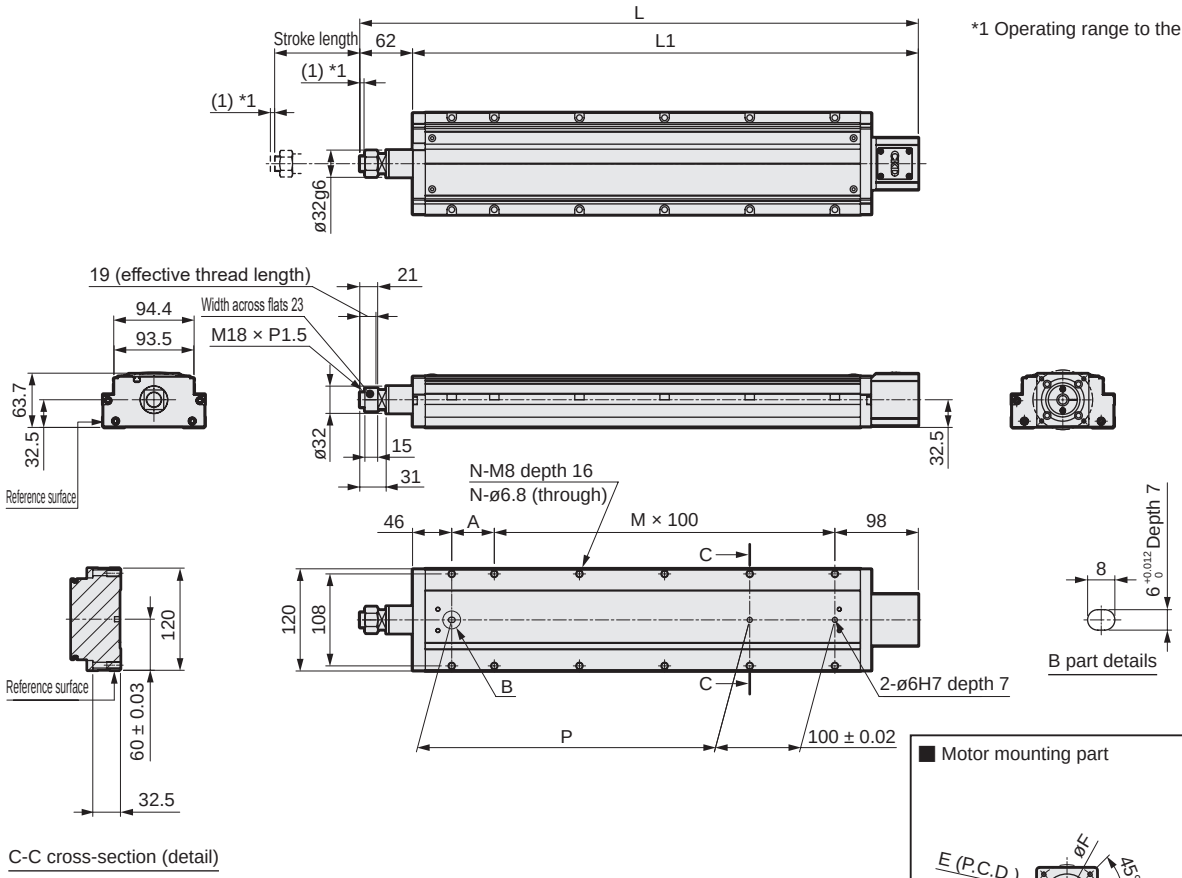

*1 Operating range to the mechanical stopper

■ Motor mounting part

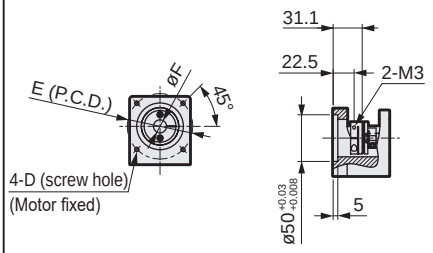

Mounted motor specification	D	E	F	Motor mounting bolt
M 400 W	M5	ø70	ø14	4-M5 × L18
Y 400 W	M5	ø70	ø14	4-M5 × L18
P 400 W	M4	ø70	ø14	4-M4 × L18

*When the stroke is 50 mm, in some cases sensors must be attached on both sides.

Stroke code	0050	0100	0150	0200	0250	0300	0350	0400	0450	0500	0550	0600	0650	0700	0750	0800
Stroke length (mm)	50	100	150	200	250	300	350	400	450	500	550	600	650	700	750	800
L	406	456	506	556	606	656	706	756	806	856	906	956	1006	1056	1106	1156
L1	344	394	444	494	544	594	644	694	744	794	844	894	944	994	1044	1094
A	100	50	100	50	100	50	100	50	100	50	100	50	100	50	100	50
M	1	2	2	3	3	4	4	5	5	6	6	7	7	8	8	9
N	6	8	8	10	10	12	12	14	14	16	16	18	18	20	20	22
P	100	150	200	250	300	350	400	450	500	550	600	650	700	750	800	850
Weight (kg)	4.9	5.4	5.9	6.4	6.9	7.4	7.9	8.4	8.9	9.4	9.9	10.4	10.9	11.4	11.9	12.4

List of attachments

[Motor mounting parts]

Mounted motor specification	Coupling	Motor mounting bolt	
		Size	Quantity
M	Assembled at shipment	M5	4
Y		M5	4
P		M4	4

[Origin sensor, limit sensor]

Manufacturer	Model	Included quantity
KITA	KT-32N-2M	3

*Refer to page 80 for sensor specifications.

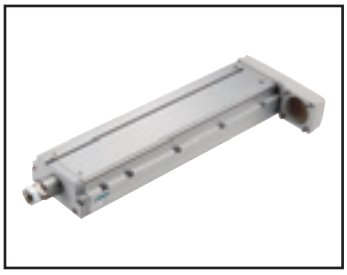

Electric actuator (motorless) Rod with built-in guide

EBR-12L*

Motor side mounting (left, right, bottom)

● Servo motor size: 400 W

RoHS

How to order

EBR - 12 L R - 00 - 05 0050 N NN - M 4 N N

Ⓐ Ⓑ Ⓒ Ⓓ Ⓔ Ⓕ Ⓖ Ⓗ Ⓘ Ⓙ

Ⓐ Body size	
12	Body width 120 mm

Ⓑ Motor	
L	None

Ⓒ Motor mounting direction	
R	Right mounting
D	Bottom mounting
L	Left mounting

Ⓓ Screw lead	
05	5 mm
10	10 mm
20	20 mm
32	32 mm

Ⓔ Stroke length	
0050 to 0800	50 mm (In 50 mm increments) 800 mm

Ⓕ Brake	
N	None

Ⓖ Mounted motor specification	
M	Select the mounted motor specification from the table at right.
Y	
P	

Ⓗ Motor size	
4	400 W

Ⓘ Origin sensor *1	
N	None
C	Yes

Ⓙ Limit sensor *1	
N	None
B	Yes

Manufacturer	400 W
Mitsubishi Electric Corporation	M
Delta Electronics Co., Ltd.	M
Sanyo Denki Co., Ltd.	M
YASKAWA Electric Corporation	Y
Keyence Corporation	Y
Panasonic Corporation	P
OMRON Corporation	P
Fuji Electric Co., Ltd.	M
Bosch Rexroth AG	P
Rockwell Automation, Inc.	M
SIEMENS AG	M

*Refer to page 49 for the motor model No.

*1 Origin sensor and limit sensor are available as a set. As it is both-or-nothing, select "None" for both.

Specifications

Applicable motor sizes		400 W servo motor			
Drive method		Ball screw ø16			
Stroke length	mm	50 to 800			
Screw lead	mm	5	10	20	32
Max. load capacity kg *1	Horizontal	110	88	40	30
	Vertical	33	22	10	8
Max. speed	mm/s	250	500	1000	1600
Rated thrust *1	N	1388	694	347	218
Repeatability	mm	±0.01			
Lost motion	mm	0.1 or less			
Operating ambient temperature, humidity		0 to 40°C (no freezing) 35 to 80% RH (no condensation)			
Storage ambient temperature, humidity		-10 to 50°C (no freezing) 35 to 80% RH (no condensation)			
Atmosphere		No corrosive gas, explosive gas, or dust			

*Refer to pages 76 to 77 for the allowable applied load for the overhang amount.

*1 Rated thrust and max. load capacity are guideline values assuming that the motor mounted will output the rated torque.

Stroke and max. speed

(mm/s)

Stroke length / Screw lead	50 to 300	350 to 700
5	250	200
10	500	400
20	1000	850
32	1600	1350

*Max. speed is when the motor mounted by the customer can output rotation speed of 3000 rpm.
The max. speed is restricted by the stroke. Do not move at speeds beyond the limit.

Dimensions Motor right-side mounting

● EBR-12LR

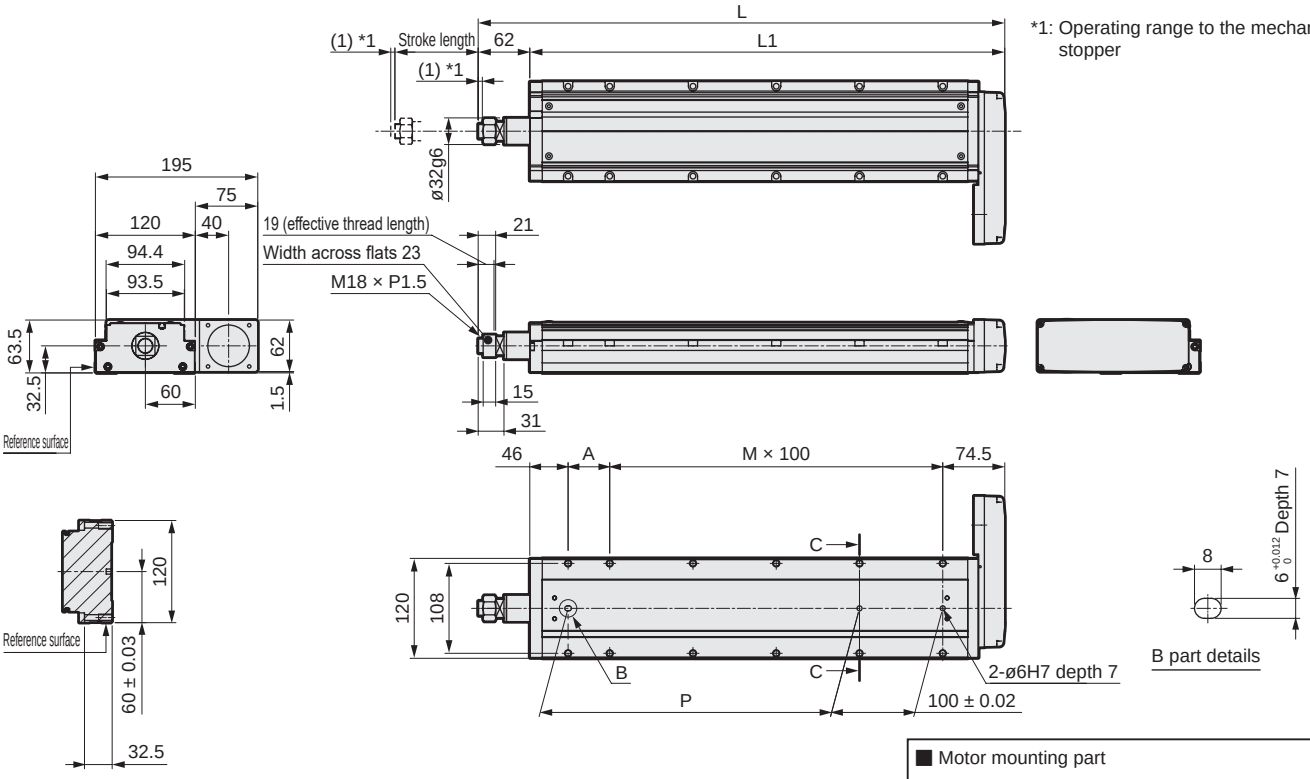

■ Motor mounting part

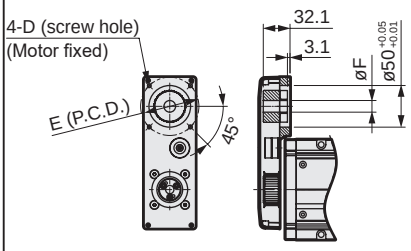

Mounted motor specification	D	E	F	Motor screw
M 400 W	M5	ø70	ø14	4-M5 × L18
Y 400 W	M5	ø70	ø14	4-M5 × L18
P 400 W	M4	ø70	ø14	4-M4 × L18

*When the stroke is 50 mm, in some cases sensors must be attached on both sides.

Stroke code	0050	0100	0150	0200	0250	0300	0350	0400	0450	0500	0550	0600	0650	0700	0750	0800
Stroke length (mm)	50	100	150	200	250	300	350	400	450	500	550	600	650	700	750	800
L	382.5	432.5	482.5	532.5	582.5	632.5	682.5	732.5	782.5	832.5	882.5	932.5	982.5	1032.5	1082.5	1132.5
L1	320.5	370.5	420.5	470.5	520.5	570.5	620.5	670.5	720.5	770.5	820.5	870.5	920.5	970.5	1020.5	1070.5
A	100	50	100	50	100	50	100	50	100	50	100	50	100	50	100	50
M	1	2	2	3	3	4	4	5	5	6	6	7	7	8	8	9
N	6	8	8	10	10	12	12	14	14	16	16	18	18	20	20	22
P	100	150	200	250	300	350	400	450	500	550	600	650	700	750	800	850
Weight (kg)	5.4	5.8	6.3	6.8	7.3	7.8	8.3	8.8	9.2	9.7	10.2	10.7	11.2	11.7	12.2	12.6

List of attachments

[Motor mounting]

Mounted motor specification	Timing belt, pulley	Motor mounting bolt	
		Size	Included quantity
M	Included at shipment	M5	4
Y		M5	4
P		M4	4

[When origin/limit sensors are selected]

Sensor		
Manufacturer	Model	Included quantity
KITA	KT-32N-2M	3

*Refer to page 80 for sensor specifications.

Dimensions Motor bottom mounting

● EBR-12LD

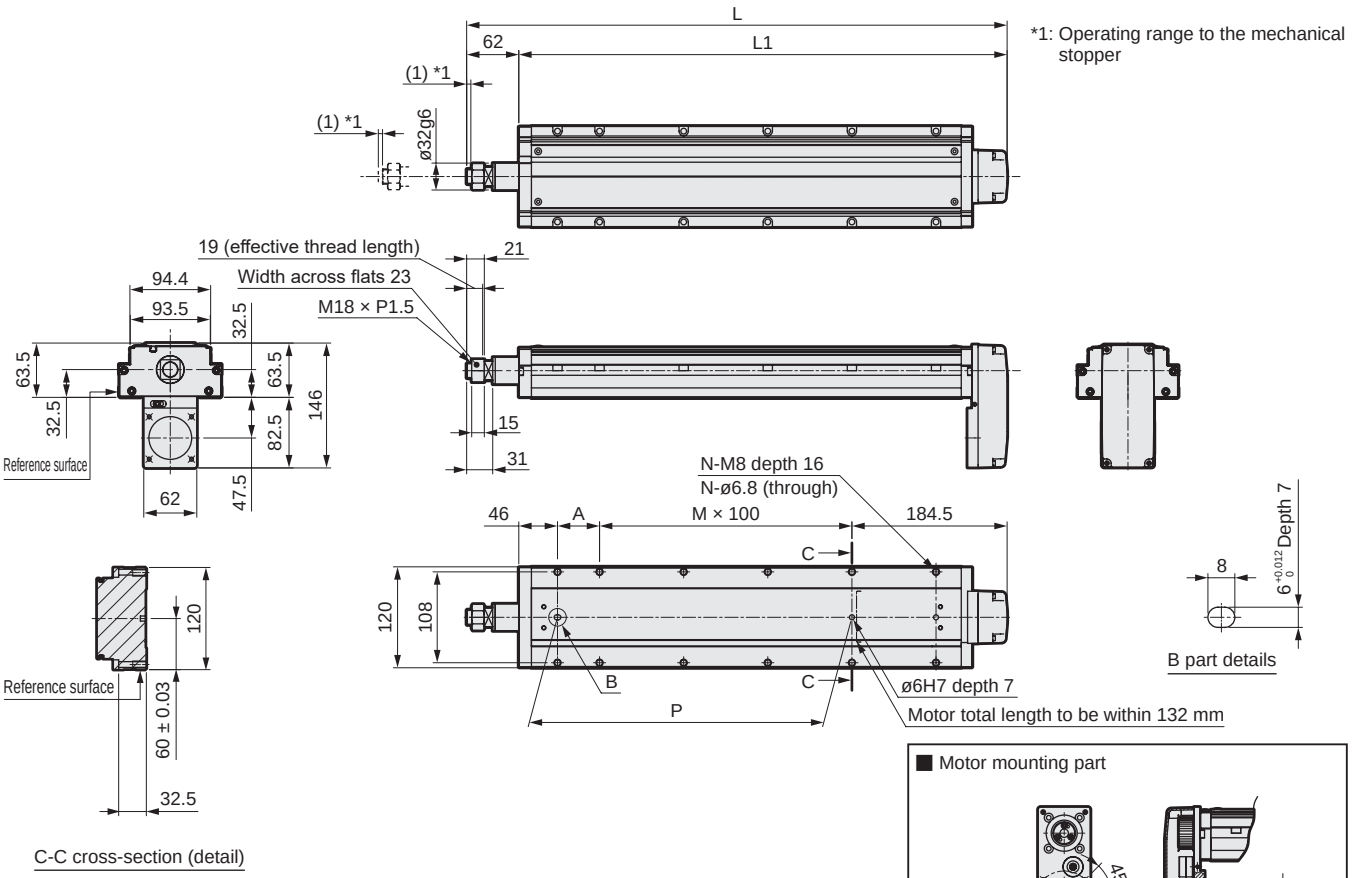

■ Motor mounting part

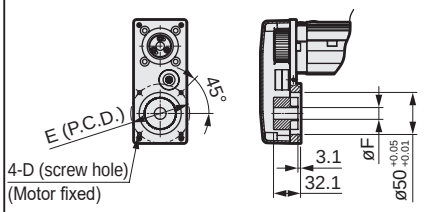

Mounted motor specification	D	E	F	Motor screw
M 400 W	M5	ø70	ø14	4-M5 × L18
Y 400 W	M5	ø70	ø14	4-M5 × L18
P 400 W	M4	ø70	ø14	4-M4 × L18

*When the stroke is 50 mm, in some cases sensors must be attached on both sides.

Stroke code	0050	0100	0150	0200	0250	0300	0350	0400	0450	0500	0550	0600	0650	0700	0750	0800
Stroke length (mm)	50	100	150	200	250	300	350	400	450	500	550	600	650	700	750	800
L	392.5	442.5	492.5	542.5	592.5	642.5	692.5	742.5	792.5	842.5	892.5	942.5	992.5	1042.5	1092.5	1142.5
L1	330.5	380.5	430.5	480.5	530.5	580.5	630.5	680.5	730.5	780.5	830.5	880.5	930.5	980.5	1030.5	1080.5
A	100	50	100	50	100	50	100	50	100	50	100	50	100	50	100	50
M	0	1	1	2	2	3	3	4	4	5	5	6	6	7	7	8
N	4	6	6	8	8	10	10	12	12	14	14	16	16	18	18	20
P	100	150	200	250	300	350	400	450	500	550	600	650	700	750	800	850
Weight (kg)	5.3	5.8	6.3	6.8	7.3	7.7	8.2	8.7	9.2	9.7	10.2	10.7	11.1	11.6	12.1	12.6

List of attachments

[Motor mounting]

Mounted motor specification	Timing belt, pulley	Motor mounting bolt	
		Size	Included quantity
M	Included at shipment	M5	4
Y		M5	4
P		M4	4

[When origin/limit sensors are selected]

Sensor		
Manufacturer	Model	Included quantity
KITA	KT-32N-2M	3

*Refer to page 80 for sensor specifications.

Dimensions Motor left-side mounting

● EBR-12LL

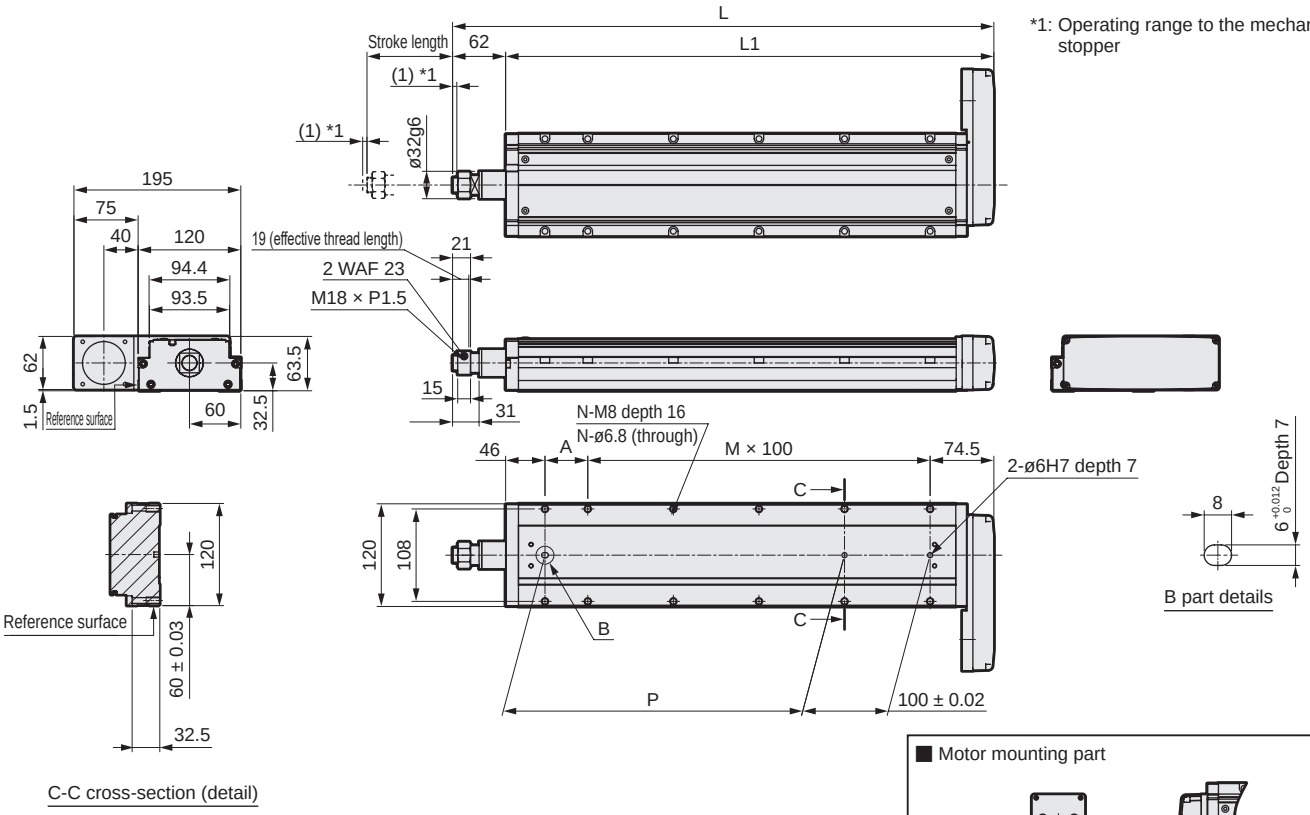

*1: Operating range to the mechanical stopper

■ Motor mounting part

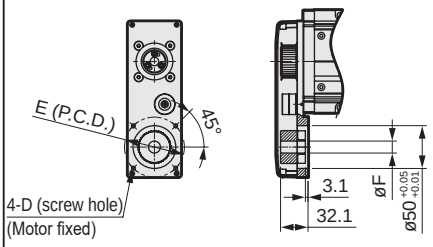

Mounted motor specification	D	E	F	Motor screw
M 400 W	M5	ø70	ø14	4-M5 × L18
Y 400 W	M5	ø70	ø14	4-M5 × L18
P 400 W	M4	ø70	ø14	4-M4 × L18

*When the stroke is 50 mm, in some cases sensors must be attached on both sides.

Stroke code	0050	0100	0150	0200	0250	0300	0350	0400	0450	0500	0550	0600	0650	0700	0750	0800
Stroke length (mm)	50	100	150	200	250	300	350	400	450	500	550	600	650	700	750	800
L	382.5	432.5	482.5	532.5	582.5	632.5	682.5	732.5	782.5	832.5	882.5	932.5	982.5	1032.5	1082.5	1132.5
L1	320.5	370.5	420.5	470.5	520.5	570.5	620.5	670.5	720.5	770.5	820.5	870.5	920.5	970.5	1020.5	1070.5
A	100	50	100	50	100	50	100	50	100	50	100	50	100	50	100	50
M	1	2	2	3	3	4	4	5	5	6	6	7	7	8	8	9
N	6	8	8	10	10	12	12	14	14	16	16	18	18	20	20	22
P	100	150	200	250	300	350	400	450	500	550	600	650	700	750	800	850
Weight (kg)	5.4	5.8	6.3	6.8	7.3	7.8	8.3	8.8	9.2	9.7	10.2	10.7	11.2	11.7	12.2	12.6

List of attachments

[Motor mounting]

Mounted motor specification	Timing belt, pulley	Motor mounting bolt	
		Size	Included quantity
M	Included at shipment	M5	4
Y		M5	4
P		M4	4

[When origin/limit sensors are selected]

Sensor		
Manufacturer	Model	Included quantity
KITA	KT-32N-2M	3

*Refer to page 80 for sensor specifications.

Model selection

STEP 1 Confirming load capacity

Load capacity varies with mounting orientation and screw lead.
Refer to the Series Variation (page 46) and the specification table for each model to select the size and screw lead.

STEP 2 Confirming positioning time

Calculate the positioning time of the selected product according to the following example and confirm that the required tact is achievable.
Select the speed and acceleration/deceleration from the specification table for each model and the motor selected by the customer.

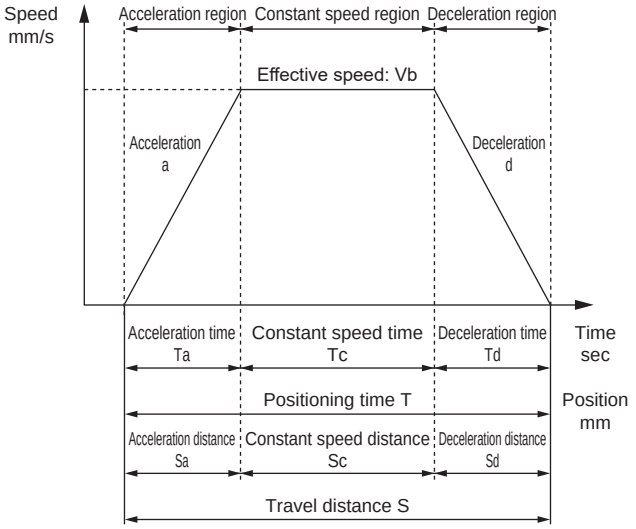

	Description	Code	Unit	Remarks
Set value	Set speed	V	mm/s	
	Set acceleration	a	mm/s^2	
	Set deceleration	d	mm/s^2	
	Travel distance	S	mm	
Calculated value	Achieved speed	Vmax	mm/s	= {2 × a × d × S/(a + d)}$^{1/2}$
	Effective speed	Vb	mm/s	Smaller of V and Vmax
	Acceleration time	Ta	s	= Vb/a
	Deceleration time	Td	s	= Vb/d
	Constant speed time	Tc	s	= Sc/Vb
	Acceleration distance	Sa	mm	= (a × Ta^2)/2
	Deceleration distance	Sd	mm	= (d × Td^2)/2
	Constant speed distance	Sc	mm	= S - (Sa + Sd)
	Positioning time	T	s	= Ta + Tc + Td

*Do not use at speeds that exceed the specifications.
*Depending on acceleration/deceleration and stroke length, the trapezoid speed waveform may not be formed (the set speed may not be achieved). In this case, select the effective speed (Vb) from the set speed (V) and the achieved speed (Vmax), whichever is smaller.
*Use at acceleration and deceleration of 1 G or less for horizontal use and 0.5 G or less for vertical use.
*While settling time depends on working conditions, it may take 0.2 seconds or so.
*1 G ≈ 9.8 m/s^2.

STEP 3 Confirming allowable load weight

Confirm that the load weight during operation is within the allowable range (pages 76 to 77).
If the allowable load weight is exceeded, increase the size or use an external guide in conjunction.

MEMO

Allowable load weight

[When installed horizontally or wall-mounted]

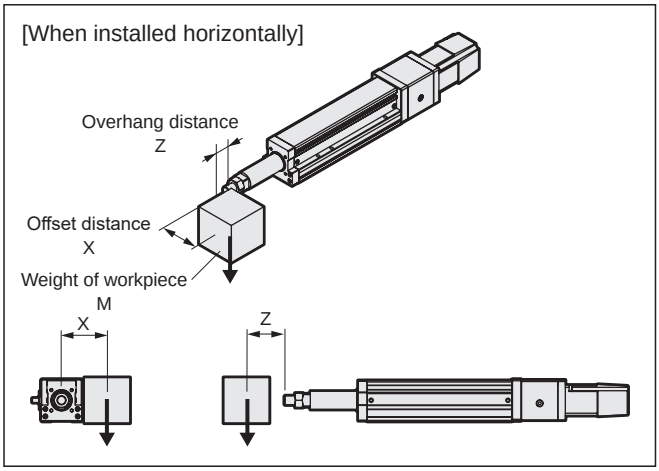

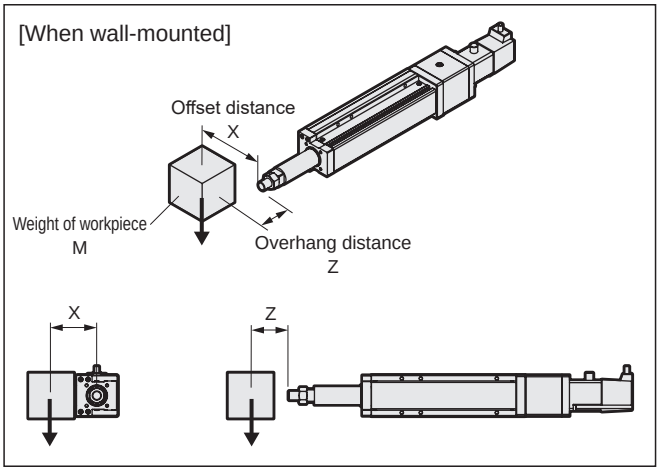

[Offset (X) 0 / Overhang distance (Z) 0 mm]

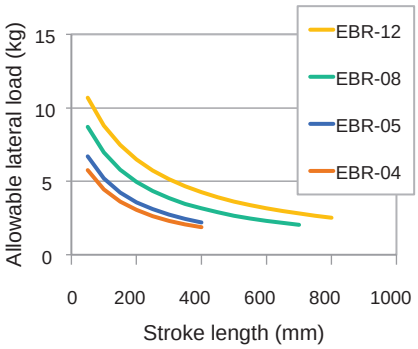

[Offset (X) 0 / Overhang distance (Z) 50 mm]

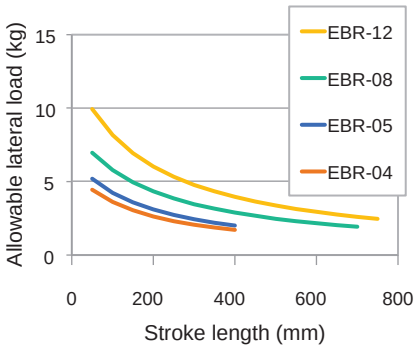

[Offset (X) 0 / Overhang distance (Z) 100 mm]

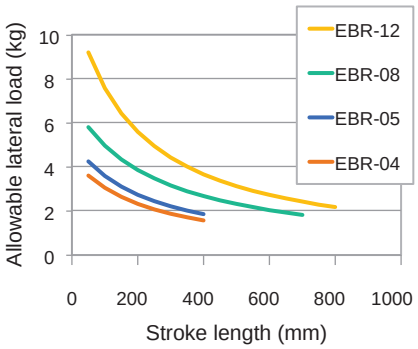

[Offset (X) 100 mm / Overhang distance (Z) 0 mm]

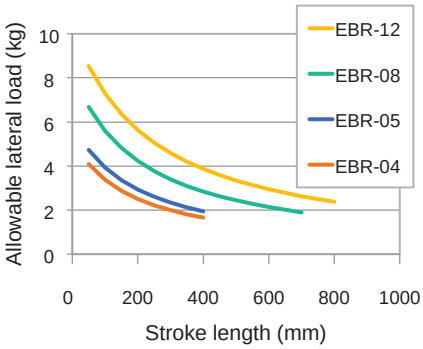

[Offset (X) 100 mm / Overhang distance (Z) 50 mm]

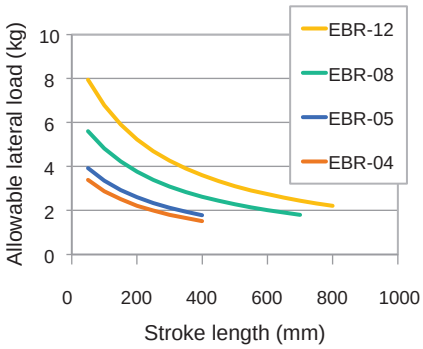

[Offset (X) 100 mm / Overhang distance (Z) 100 mm]

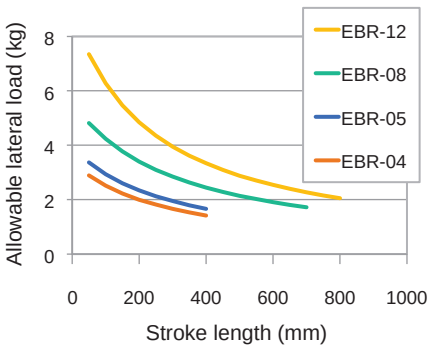

* Values are when the actuator operating life is 5,000km. (Acceleration/deceleration 0.5G, speed 300mm/s)
Screw lead: 2 mm is the value when the travel life is 1,000km.

Allowable load weight

[When installed vertically]

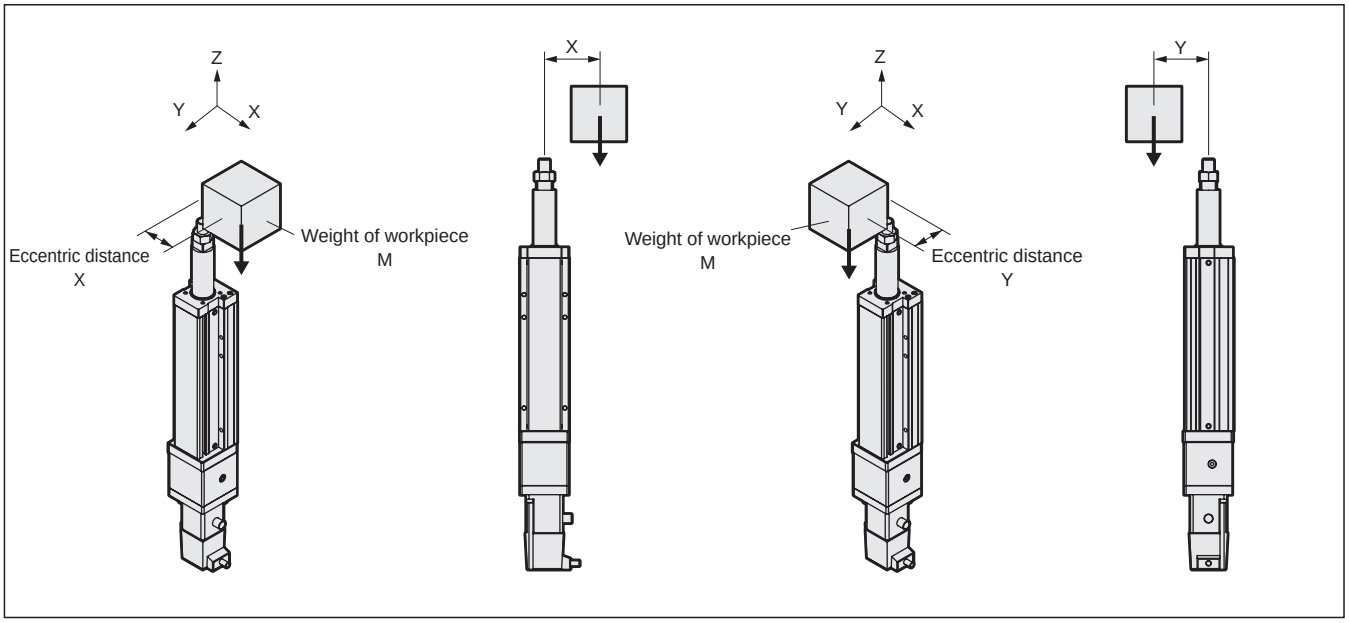

[EBR-04]

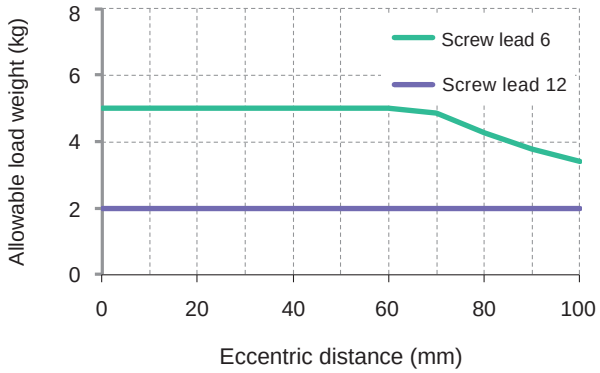

[EBR-05]

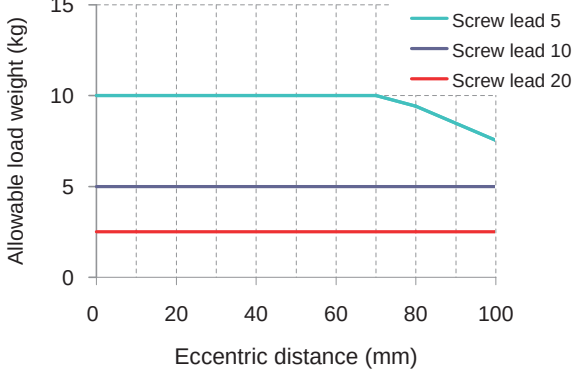

[EBR-08]

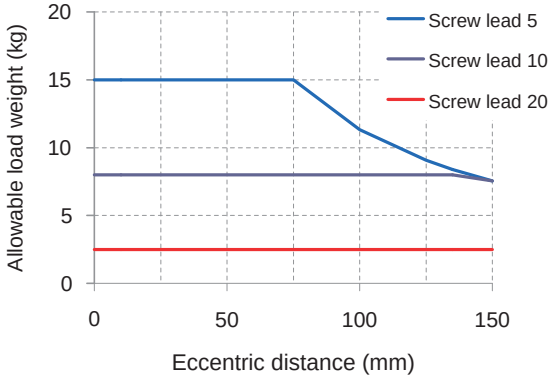

[EBR12]

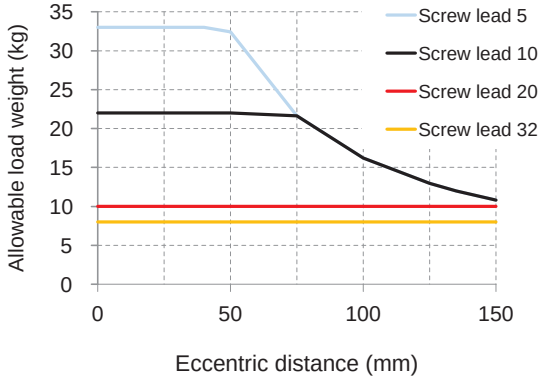

* Values are when the actuator operating life is 5,000km. (Acceleration/deceleration 0.5G, speed 300mm/s)
Screw lead: 2 mm is the value when the travel life is 1,000km.

Rod end runout (EBR Series) *Reference value

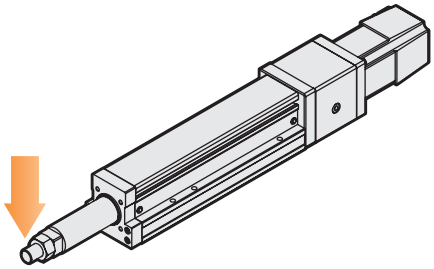

[EBR-04]

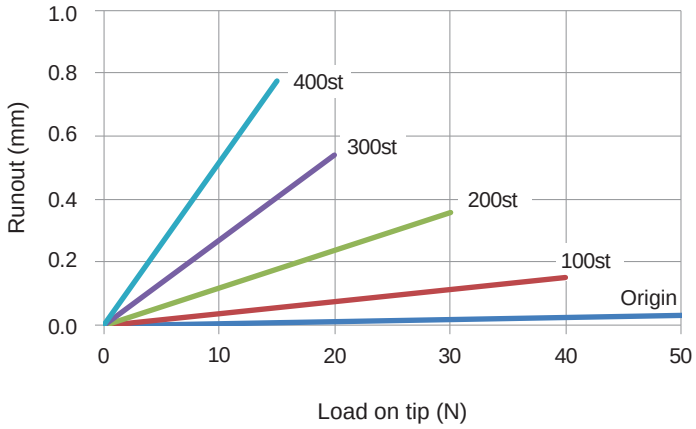

[EBR-05]

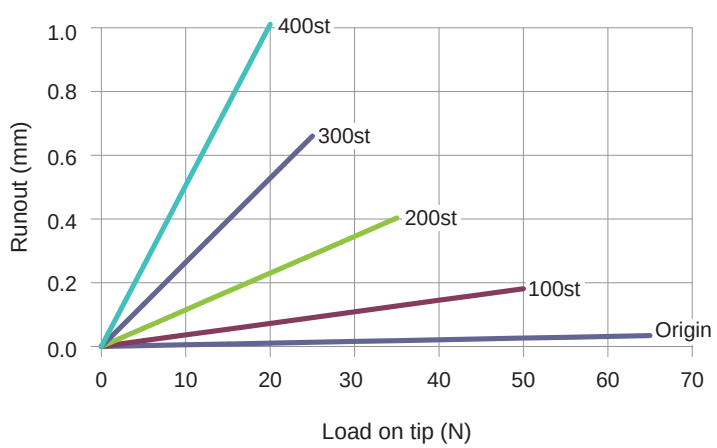

Rod end runout (EBR Series) *Reference value

[EBR-08]

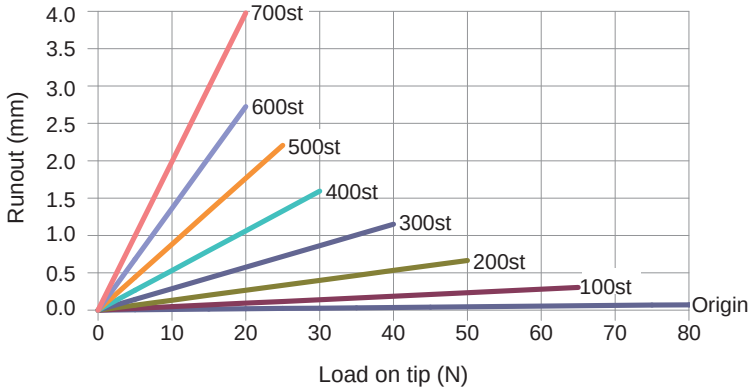

[EBR-12]

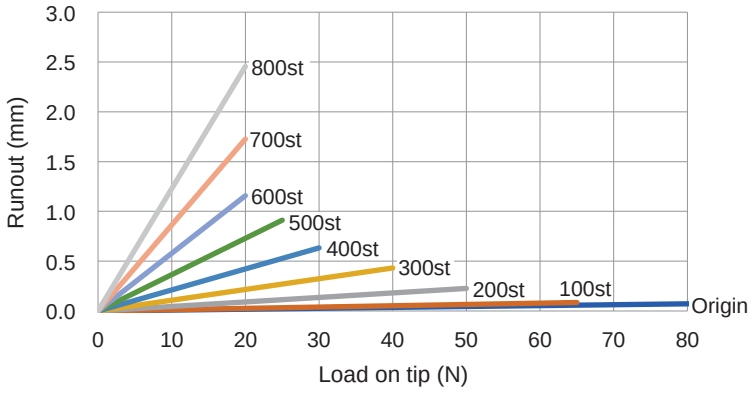

Origin sensor, limit sensor

[Specifications]

Item		Specifications
Manufacturer	Manufacturer	KITA
	Model	KT-32N-2M
Output method		NPN output
Load voltage		10 to 30 VDC
Load current		100 mA or less
Current consumption		17 mA at 24 DC
Internal voltage drop		Max. 1.5 V
Leakage current		Max. 0.01 mA
Indicator lamp		Red
Impact resistance		50 G
Ambient temperature		-10 to 70°C
Degree of protection		IP67 IEC 60529 Standards
Cord length		2 m

Output circuit

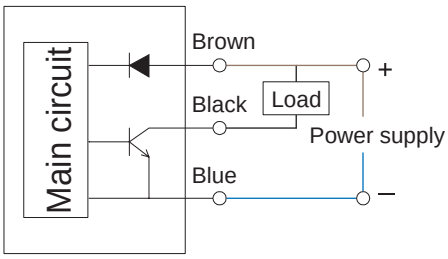

List of attachments

Motor mounting bolt (common motor mounting direction)

Model No.	Mounted motor specification	Motor size	Size	Quantity
EBR-04	M	50 W	M4	4
	Y		M4	4
	P		M3	4
	F		M4	4
EBR-05	M	100 W	M4	4
	Y		M4	4
	P		M3	4
	F		M4	4
EBR-08	M	200 W	M5	4
	Y		M5	4
	P		M4	4
	F		M5	4
EBR-12	M	400 W	M5	4
	Y		M5	4
	P		M4	4

Coupling

Model No.	Attachment name	Quantity
LE (Motor mounting direction: Straight)	Coupling (Assembled at shipment)	1

Timing belt, pulley (motor side)

Model No.	Shipping format	Quantity
L* (Motor mounting on side/bottom)	Included at shipment *1	1 each

*1 The body side pulley is assembled.

Origin sensor, limit sensor

Model No.	Shipping format	Quantity
When "with" sensor is selected	Included at shipment	3 *1

*1 When "None" is selected for origin sensor or limit sensor, the other sensor is also "None".

Maintenance parts

Maintenance parts (coupling)

Model No. 	Compatibility	Hole diameter
EBS-05-COUPLING	EBR-04LE, EBR-05LE	ø8
EBS-08-COUPLING-M	EBR-08LE (Motor mounting specification: M/Y/F)	ø14
EBS-08-COUPLING-P	EBR-08LE (Motor mounting specification: P)	ø11
EBS-12-COUPLING-M	EBR-12LE (Motor mounting specification: M, Y)	ø14
EBS-12-COUPLING-P	EBR-12LE (Motor mounting specification: P)	ø14

Maintenance parts (timing belt, pulley)

Model No. 	Compatibility	Part
EBR-04-BELT-KIT	EBR-04LR/LD/LL	Timing belt, pulley (motor side) (1 each)
EBS-05-BELT-KIT	EBR-05LR/LD/LL	
EBS-08-BELT-KIT-M	EBR-08LR/LD/LL (Mounted motor specification: M/Y/F)	
EBS-08-BELT-KIT-P	EBR-08LR/LD/LL (Mounted motor specification: P)	
EBS-12-BELT-KIT-M	EBR-12LR/LD/LL (Mounted motor specification: M/Y)	
EBS-12-BELT-KIT-P	EBR-12LR/LD/LL (Mounted motor specification: P)	

Maintenance parts (origin sensor, limit sensor)

Model No. 	Compatibility	Part
EBR-SENSOR-N	All EBR models	Body

Maintenance parts (grease nozzle)

Model No. 	Compatibility
EBS-NOZZLE	EBR-04, EBR-05, EBR-08

MEMO

Safety precautions

Stepper motor compatible				Servo motor compatible							
ECS	ETS	EBR	EBS	EKS	ECV	ETV	ECS	ETS Multi-Axis	ETS	EBR	EBS

ETS

Slider type (ball screw drive)

Servo motor compatible electric actuator Motorless specification



CONTENTS

Product introduction	Intro
Series variation	86
● Specifications/How to order/Dimensions	
· ETS-05	90
· ETS-06	96
· ETS-10	102
· ETS-12	110
· ETS-13	118
· ETS-14	126
· ETS-17	134
· ETS-22	142
● Model selection	150
● Technical data	152
⚠ Safety precautions	686
Model Selection Check Sheet	708

Series variation

Type	Model No.		Applicable motor capacity (W)	Body width (mm)	Screw lead (mm)	Max. load capacity (kg) Horizontal *2	Max. load capacity (kg) Vertical	Stroke length (mm) and max. speed (mm/s) *3	Page
Slider		ETS-05	100	51	2	10	7	50 100 150 200 250 300 350 400 450 500 550 600 650 700 750 800 850 900 950 1000 1050 1100 1150 1200 1250 1300 1350 1400 1450 1500 1550 1600 1650 mm 100mm/s: 90 80 70 60 — 13.53 sec.*4	90
					5	10	3	250: 225 200 175 150 — 5.53 sec.	
					10	5	1.5	500: 450 400 350 300 — 2.87 sec.	
		ETS-06	50 *1	65	2	12	6	100: 90 80 70 60 — 13.53 sec.	96
					5	12	4	250: 225 200 175 150 — 5.53 sec.	
					10	6	2	500: 450 400 350 300 — 2.87 sec.	
			100		2	30	15	100: 90 80 70 60 — 13.53 sec.	
					5	30	10	250: 225 200 175 150 — 5.53 sec.	
					10	15	5	500: 450 400 350 300 — 2.87 sec.	
		ETS-10	100	102	5	50	12	250: 225 200 175 150 125 — 8.6 sec.	102
					10	30	8	500: 450 400 350 300 250 — 4.4 sec.	
			200		16	22	5	800: 720 640 560 480 400 — 2.83 sec.	
					20	18	3	1000: 900 800 700 600 500 — 2.3 sec.	
		ETS-12	100	102	5	50	12	250: 225 200 175 150 125 — 8.6 sec.	110
					10	30	8	500: 450 400 350 300 250 — 4.4 sec.	
			200		16	22	5	800: 720 640 560 480 400 — 2.83 sec.	
					20	18	3	1000: 900 800 700 600 500 — 2.3 sec.	
		ETS-13	100 *1	135	5	50	12	250: 225 200 175 150 125 — 8.6 sec.	118
					10	30	8	500: 450 400 350 300 250 — 4.4 sec.	
					16	22	5	800: 720 640 560 480 400 — 2.83 sec.	
					20	18	3	1000: 900 800 700 600 500 — 2.3 sec.	
			200	135	5	70	17	250: 225 200 175 150 125 — 8.6 sec.	
					10	47	12	500: 450 400 350 300 250 — 4.4 sec.	
			400		16	30	6	800: 720 640 560 480 400 — 2.83 sec.	
					20	24	4	1000: 900 800 700 600 500 — 2.3 sec.	
		ETS-14	200	135	5	95	27	250: 225 200 175 150 125 — 8.6 sec.	126
					10	75	18	500: 450 400 350 300 250 — 4.4 sec.	
					16	44	7	800: 720 640 560 480 400 — 2.83 sec.	
					20	35	6	1000: 900 800 700 600 500 — 2.3 sec.	
			400	135	5	110	33	250: 225 200 175 150 125 — 8.6 sec.	
					10	88	22	500: 450 400 350 300 250 — 4.4 sec.	
					16	48	10	800: 720 640 560 480 400 — 2.83 sec.	
					20	40	8	1000: 900 800 700 600 500 — 2.3 sec.	
		ETS-17	400	170	5	120	40	250: 225 200 175 150 — 8.53 sec.	134
					10	110	30	500: 450 400 350 300 — 4.37 sec.	
					20	75	14	1000: 900 800 700 600 — 2.28 sec.	
					40	35	7	2000: 1800 1600 1400 1200 — 1.24 sec.	
			750	170	5	120	50	250: 225 200 175 150 — 8.53 sec.	
					10	120	40	500: 450 400 350 300 — 4.37 sec.	
					20	83	25	1000: 900 800 700 600 — 2.28 sec.	
					40	50	10	2000: 1800 1600 1400 1200 — 1.24 sec.	
		ETS-22	750	220	5	150	55	250: 225 200 175 150 125 100 — 15.2 sec.	142
					10	150	45	500: 450 400 350 300 250 200 — 7.7 sec.	
					25	120	20	1250: 1125 1000 875 750 625 500 — 3.2 sec.	
					40	60	10	2000: 1800 1600 1400 1200 1000 800 600 — 2.7 sec.	

*1: ETS-06 50 W/ETS-13 100 W support only metal stopper (ETS-X) specifications.
*2: The load capacity when wall mounted is the same as for horizontal installation.
*3: The max. speed is the speed when the motor mounted by the customer can output a rotation speed of 3000 rpm. The max. speed is restricted by the stroke. Do not move at speeds beyond the limit.
*4: ⏱ shows the positioning time. Maximum stroke when installed horizontally and operated at max. speed and max. acceleration/deceleration. Note that this is not the value at maximum load capacity.

How to order

How to order

ETS - 06 - 05 040 - E M 1 N C B D P - M - X

Ⓐ 06

Ⓐ Body size	*1
05	Body width 51 mm
06	Body width 65 mm
10	Body width 102 mm
12	Body width 102 mm
13	Body width 135 mm
14	Body width 135 mm
17	Body width 170 mm
22	Body width 220 mm

Ⓑ 05

Ⓑ Screw lead	
02	2 mm
05	5 mm
10	10 mm
16	16 mm
20	20 mm
25	25 mm
40	40 mm

Ⓒ 040

Ⓒ Stroke length	
005 to 150	50 mm (In 50 mm increments) 1500 mm

Ⓓ E

Ⓓ Motor mounting direction	*2 *3
E	Straight mounting
B	Built-in mounting
R	Right mounting
D	Bottom mounting
L	Left mounting

Ⓔ M

Ⓔ Mounted motor specification	
M Y P F	Refer to the list on the page at right

Ⓕ 1

Ⓕ Motor capacity	*1
0	50 W
1	100 W
2	200 W
4	400 W
8	750 W

Ⓖ N

Ⓖ Brake	*2
N	None
B	Yes

Ⓗ C

Ⓗ Origin sensor (1 pc)	*4
N	None
A	Inside motor side
B	Inside motor opposite side
C	Outside motor side (included at shipment)
D	Outside motor opposite side (included at shipment)

Ⓘ B

Ⓘ Limit sensor (2 pcs)	*4
N	None
A	Inside
B	Outside

Ⓙ D

Ⓙ Grease nipple	
N	None (Body mounting direction: Standard)
D	None (Body mounting direction: Bottom side)
R	Right
L	Left

Ⓚ P

Ⓚ Positioning pin hole	
N	None
P	Yes

Ⓛ M

Ⓛ Magnet slider method	*5
	Standard
M	Yes

Ⓜ X

Ⓜ Metal stopper specifications (ETS-X)	*1 *3
	Standard
X	Yes

*1: ETS-06 50 W/ETS-13 100 W support only metal stopper specifications.
*2: Select "Yes" to the Brake only when the motor mounting direction is built-in mounting.
For other mounting directions, select "None."
*3: Built-in mounting cannot be selected with metal stopper specifications.
*4: The sensor dog is assembled at shipment regardless of sensor presence.
*5: ETS-05/06 uses the magnet slider method.
Other sizes use the standard.

Manufacturer	50 W	100 W	200 W	400 W	750 W
Mitsubishi Electric Corporation	M	M	M	M	M
Delta Electronics Co., Ltd.	M	M	M	M	M
Sanyo Denki Co., Ltd.	M	M	M	M	-
YASKAWA Electric Corporation	Y	Y	Y	Y	Y
Keyence Corporation	Y	Y	Y	Y	Y
Panasonic Corporation	P	P	P	P	P
OMRON Corporation	M	M	P	P	P
Fuji Electric Co., Ltd.	M	M	M	M	M
FANUC CORPORATION	F	F	F	F	F
DENSO WAVE Incorporated (ETS-X only)	-	M	M	M	-
Bosch Rexroth AG	P	P	P	P	P
Rockwell Automation, Inc.	M	M	M	M	M
SIEMENS AG	M	M	M	M	M

*50 W supports only ETS-06 metal stopper specifications.

Example of model No.

ETS-06-05040-EM1NCBDP-M-X

Ⓐ Body size : 06 Series
Ⓑ Screw lead : 5 mm
Ⓒ Stroke length : 400 mm
Ⓓ Motor mounting direction : Straight
Ⓔ Mounted motor specification : M (refer to the table on the page at right)
Ⓕ Motor capacity : 100 W
Ⓖ Brake : None
Ⓗ Origin sensor : External motor side
Ⓘ Limit sensor : Outside
Ⓙ Grease nipple : None (Body mounting method: Bottom side)
Ⓚ Positioning pin hole : Yes
Ⓛ Magnet slider method : Yes
Ⓜ Metal stopper specifications (ETS-X) : Yes

*This product is composed of an actuator (and motor mounting parts) only; there is no motor attached.
The user must prepare, mount, and adjust the motor and driver.

List of servo motors recommended for mounting

Code	Manufacturer	Series	50 W *3 (ETS-06 Series)	100 W *3 *4 (ETS-05/06/10/12/13 Series)
M	Mitsubishi Electric Corporation	MELSERVO J4	HG-KR053	HG-KR13
		MELSERVO J5	HG-KT053W	HK-KT13W
M	Delta Electronics Co., Ltd.	ECMA-C *2	ECMA-C1040F	ECMA-C10401
M	Sanyo Corporation, Ltd.	SANMOTION R	R2□A04005	R2□A04010
Y	YASKAWA Electric Corporation	Σ-V	SGMJV-A5	SGMJV-01
		Σ-7 *1	SGM7J-A5	SGM7J-01
Y	Keyence Corporation	SV	SV-□005	SV-□010
		SV2 *1	SV2-□005	SV2-□010
P	Panasonic Corporation	MINAS A5	MSMD5A	MSMD01
		MINAS A6 *1	MSMF5A	MSMF01
M	OMRON Corporation	G5	R88M-K0503	R88M-K10030
		1S *1	-	R88M-1M10030
M	Fuji Electric Co., Ltd.	ALPHA7 GYS	GYS500D7-□B2□	GYS101D7-□B2□
		ALPHA7 GYB	-	-
F	FANUC CORPORATION *1	βiS-B	A06B-0111-B1	A06B-0112-B1
M	DENSO WAVE Incorporated	410627	-	410627-121□
			-	410627-122□
P	Bosch Rexroth AG	MSM	MSM019A	MSM019B
M	Rockwell Automation, Inc. *1	TLP	TLP-A046-005-DKA□2	TLP-A046-010-DKA□2
M	SIEMENS AG *1	1FK2 *7	1FK2102-0AG0	1FK2102-1AG0

Code	Manufacturer	Series	200 W *4 *5 (ETS-10/12/13/14 Series)	400 W (ETS-13/14/17 Series)	750 W *6 (ETS-17/22 Series)
M	Mitsubishi Electric Corporation	MELSERVO J4	HG-KR23	HG-KR43	HG-KR73
		MELSERVO J5	HK-KT23W	HK-KT43W	HK-KT7M3W
M	Delta Electronics Co., Ltd.	ECMA-C *2	ECMA-C10602	ECMA-C10604	ECMA-C10807
M	Sanyo Corporation, Ltd.	SANMOTION R	R2□A06020	R2□A06040	-
Y	YASKAWA Electric Corporation	Σ-V	SGMJV-02	SGMJV-04	SGMJV-08
		Σ-7 *1	SGM7J-02	SGM7J-04	SGM7J-08
Y	Keyence Corporation	SV	SV-□020	SV-□040	SV-□075
		SV2 *1	SV2-□020	SV2-□040	SV2-□075
P	Panasonic Corporation	MINAS A5	MSMD02	MSMD04	MSMD08
		MINAS A6 *1	MSMF02	MSMF04	MSMF08
P	OMRON Corporation	G5	R88M-K20030	R88M-K40030	R88M-K75030
		1S *1	R88M-1M20030	R88M-1M40030	R88M-1M75030
M	Fuji Electric Co., Ltd.	ALPHA7 GYS	GYS201D7-□B2□	GYS401D7-□B2□	GYS751D7-□B2□
		ALPHA7 GYB	GYB201D7-□B2□	GYB401D7-□B2□	GYB751D7-□B2□
F	FANUC CORPORATION *1	βiS-B	A06B-2115-B1	A06B-2116-B1	A06B-2063-B1
M	DENSO WAVE Incorporated	410627	410627-125□	410627-127□	-
			410627-126□	410627-128□	-
P	Bosch Rexroth AG	MSM	MSM031B	MSM031C	MSM041B
M	Rockwell Automation, Inc. *1	TLP	TLP-A070-020-DKA□2	TLP-A070-040-DKA□2	TLP-A090-075-DKA□2
M	SIEMENS AG *1	1FK2 *7	1FK2203-2AG0	1FK2203-4AG0	1FK2204-5AK0

* Contact CKD for mounting other than the above motors and products of other motor manufacturers.
*1: Cannot be used with built-in mounting.
*2: ECMA series (with brake) cannot be used with built-in mounting.
*3: ETS-06 50 W and ETS-13 100 W are available with metal stopper specifications only; built-in mounting cannot be selected.
*4: Contact CKD when using an OMRON motor with ETS-12 built-in mounting.
*5: ETS-10 and 12 200 W cannot be used with built-in mounting.
*6: ETS-17 750 W cannot be used with built-in mounting.
*7: The servo motor is subject to the regulations of Export Trade Control Order Appendix Table 1 Item 7 (8), and is applicable with regard to its specifications. (as of January 2021)

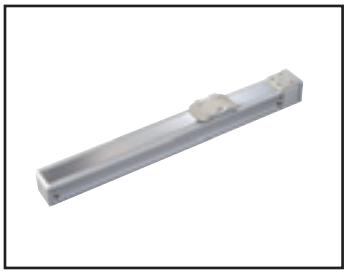

Electric actuator Ball screw drive Slider

ETS-05 Series

Straight motor mounting

● Servo motor capacity: 100 W

How to order

ETS - 05 (A) - 05 (B) 040 (C) - E (D) M (E) 1 (F) N (G) C (H) B (I) N (J) P (K) - M (L)

(A) Body size

05	Body width 51 mm

(B) Screw lead

02	2 mm
05	5 mm
10	10 mm

(C) Stroke length

005 to 080	50 mm (In 50 mm increments) 800 mm

(D) Motor mounting direction

E	Straight mounting

(E) Mounted motor specification

M, Y, P, F	Select the mounted motor specification from the table below.

(F) Motor capacity

1	100 W

(G) Brake

N	None

(H) Origin sensor (1 pc) *1 *2

N	None
C	Outside motor side
D	Outside motor opposite side

(I) Limit sensor (2 pcs) *1*2

N	None
B	Outside

(J) Grease nipple *3

N	None (Body mounting direction: Standard)

(K) Positioning pin hole

N	None
P	Yes

(L) Magnet slider method

M	Yes

Manufacturer	100 W
Mitsubishi Electric Corporation	M
Delta Electronics Co., Ltd.	M
Sanyo Denki Co., Ltd.	M
YASKAWA Electric Corporation	Y
Keyence Corporation	Y
Panasonic Corporation	P
OMRON Corporation	M
Fuji Electric Co., Ltd.	M
FANUC CORPORATION	F
Bosch Rexroth AG	P
Rockwell Automation, Inc.	M
SIEMENS AG	M

*Refer to page 89 for the motor model No.

*1: Origin sensor and limit sensor are available as a set. As it is both-or-nothing, select "None" for both.
*2: The user can adjust the sensor position. (Included at shipment)
*3: "Body mounting direction: Standard" here refers to mounting from the bottom side.

Specifications

Applicable motor capacity		100 W servo motor		
Drive method		Ball screw ø12		
Ball screw accuracy grade		C7		
Stroke length	mm	50 to 800		
Screw lead	mm	2	5	10
Max. load capacity *1	Horizontal kg	10	10	5
	Vertical kg	7	3	1.5
Max. speed	mm/s	100	250	500
Rated thrust *1	N	854	341	170
Repeatability	mm	±0.01		
Lost motion	mm	0.1 or less		
Dynamic allowable load	N	551		
Static allowable moment	N·m	MP: 20, MY: 16, MR: 19		
Dynamic allowable moment	N·m	MP: 2.8, MY: 2.8, MR: 6.8		
Operating ambient temperature, humidity		0 to 40°C (no freezing) 35 to 80% RH (no condensation)		
Storage ambient temperature, humidity		-10 to 50°C (no freezing) 35 to 80% RH (no condensation)		
Atmosphere		No corrosive gas, explosive gas, or dust		

*1 Rated thrust and max. load capacity are guideline values assuming that the motor mounted will output the rated torque.

Stroke and max. speed

(mm/s)

Stroke length / Screw lead	100 to 600	650	700	750	800
2	100	90	80	70	60
5	250	225	200	175	150
10	500	450	400	350	300

*The max. speed is the speed when the motor mounted by the customer can output a rotation speed of 3000 rpm.

Allowable overhang length

*Refer to page 152 for details.

Moment direction

MP MY MR

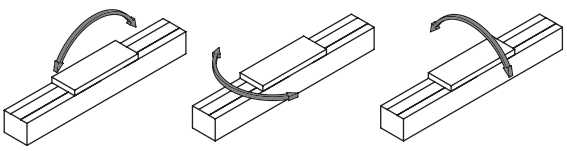

Dimensions Straight motor mounting

● ETS-05-*****-E

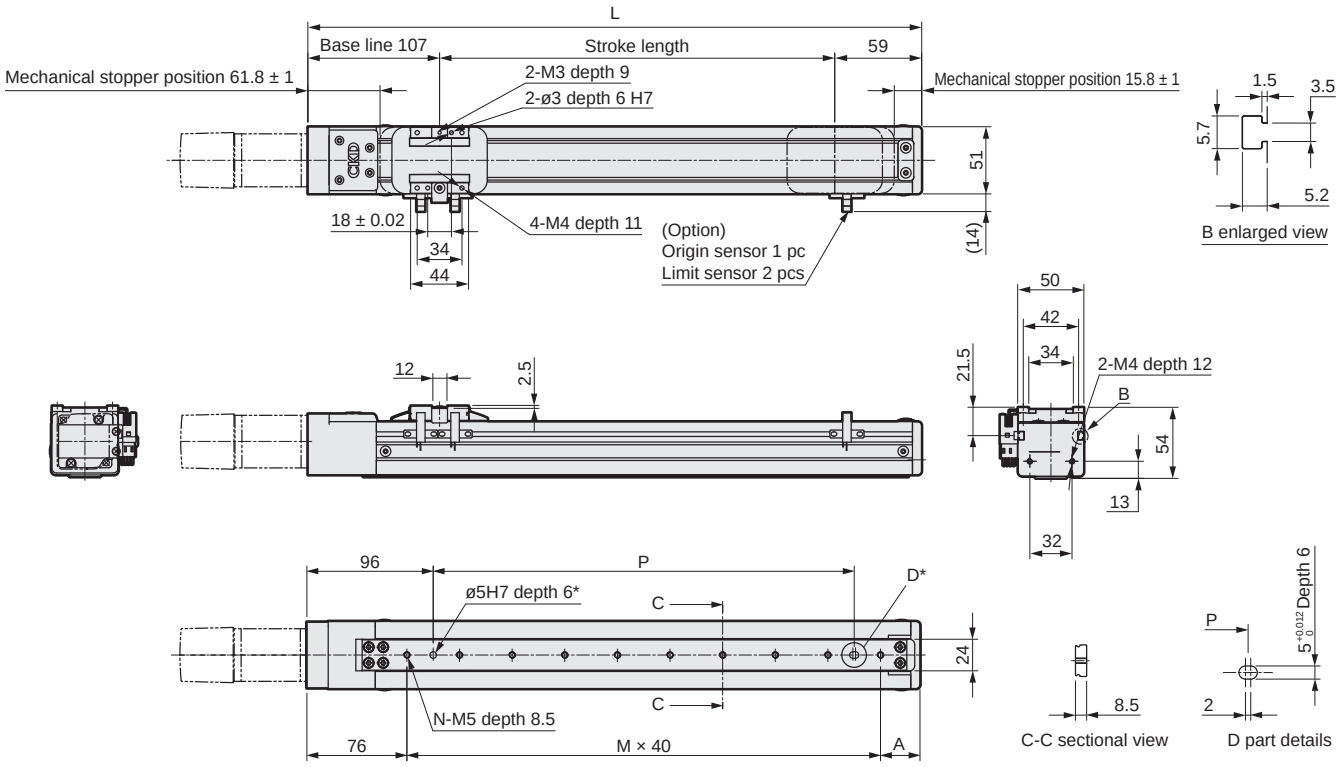

*Positioning pin hole (option)

Stroke length (mm)	50	100	150	200	250	300	350	400	450	500	550	600	650	700	750	800
L	216	266	316	366	416	466	516	566	616	666	716	766	816	866	916	966
A	60	30	40	50	60	30	40	50	60	30	40	50	60	30	40	50
M	2	4	5	6	7	9	10	11	12	14	15	16	17	19	20	21
N	3	5	6	7	8	10	11	12	13	15	16	17	18	20	21	22
P	40	120	160	200	240	320	360	400	440	520	560	600	640	720	760	800
Weight (kg)	1.5	1.6	1.7	1.8	1.9	2.1	2.2	2.2	2.4	2.5	2.6	2.7	2.8	2.9	3.0	3.1

Motor mounting part

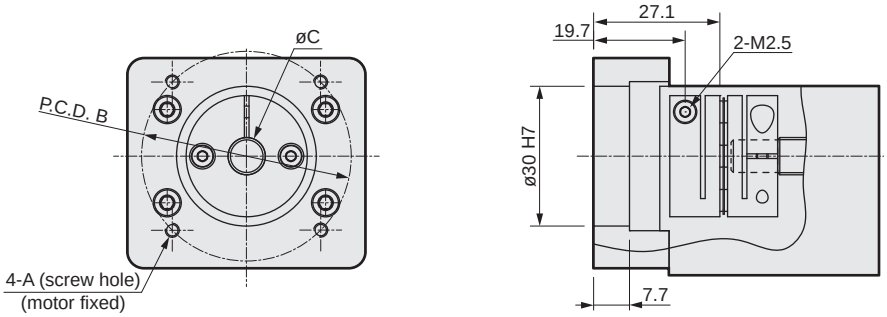

Mounted motor specification		A	B	C	Motor mounting bolt
M	100 W	M4	ø46	ø8	4-M4 × L12
Y	100 W	M4	ø46	ø8	4-M4 × L12
P	100 W	M3	ø45	ø8	4-M3 × L12
F	100 W	M4	ø46	ø8	4-M4 × L12

List of attachments

[Motor mounting parts]

Mounted motor specification	Coupling	Motor capacity	Motor mounting bolt	
			Size	Quantity
M	Assembled at shipment	100 W	M4	2
Y			M4	2
P			M3	4
F			M4	2

[Origin sensor/Limit sensor]

Manufacturer	Model	Quantity
OMRON Corporation	EE-SX672	3

*Refer to page 156 for sensor specifications.



Electric actuator Ball screw drive Slider

ETS-05 Series

Motor side mounting (left, right, bottom)

● Servo motor capacity: 100 W

How to order

ETS - 05 - 05 040 - R M 1 N C B N P - M

(A) (B) (C) (D) (E) (F) (G) (H) (I) (J) (K) (L)

(A) Body size

05	Body width 51 mm

(B) Screw lead

02	2 mm
05	5 mm
10	10 mm

(C) Stroke length

005 to 080	50 mm (In 50 mm increments) 800 mm

(D) Motor mounting direction

R	Right mounting
D	Bottom mounting
L	Left mounting

(E) Mounted motor specification

M, Y, P, F	Select the mounted motor specification from the table below.

(F) Motor capacity

1	100 W

(G) Brake

N	None

(H) Origin sensor (1 pc) *1 *2

N	None
C	Outside motor side
D	Outside motor opposite side

(I) Limit sensor (2 pcs) *1*2

N	None
B	Outside

(J) Grease nipple *3

N	None (Body mounting direction: Standard)

(K) Positioning pin hole

N	None
P	Yes

(L) Magnet slider method

M	Yes

Manufacturer	100 W
Mitsubishi Electric Corporation	M
Delta Electronics Co., Ltd.	M
Sanyo Denki Co., Ltd.	M
YASKAWA Electric Corporation	Y
Keyence Corporation	Y
Panasonic Corporation	P
OMRON Corporation	M
Fuji Electric Co., Ltd.	M
FANUC CORPORATION	F
Bosch Rexroth AG	P
Rockwell Automation, Inc.	M
SIEMENS AG	M

*Refer to page 89 for the motor model No.

*1: Origin sensor and limit sensor are available as a set. As it is both-or-nothing, select "None" for both.
*2: The user can adjust the sensor position. (Included at shipment)
*3: "Body mounting direction: Standard" here refers to mounting from the bottom side.

Specifications

Applicable motor capacity		100 W servo motor		
Drive method		Ball screw ø12		
Ball screw accuracy grade		C7		
Stroke length	mm	50 to 800		
Screw lead	mm	2	5	10
Max. load capacity *1	Horizontal kg	10	10	5
	Vertical kg	7	3	1.5
Max. speed	mm/s	100	250	500
Rated thrust *1	N	854	341	170
Repeatability	mm	±0.01		
Lost motion	mm	0.1 or less		
Dynamic allowable load	N	551		
Static allowable moment	N·m	MP: 20, MY: 16, MR: 19		
Dynamic allowable moment	N·m	MP: 2.8, MY: 2.8, MR: 6.8		
Operating ambient temperature, humidity		0 to 40°C (no freezing) 35 to 80% RH (no condensation)		
Storage ambient temperature, humidity		-10 to 50°C (no freezing) 35 to 80% RH (no condensation)		
Atmosphere		No corrosive gas, explosive gas, or dust		

*1 Rated thrust and max. load capacity are guideline values assuming that the motor mounted will output the rated torque.

Stroke and max. speed

(mm/s)

Screw lead \ Stroke length	100 to 600	650	700	750	800
2	100	90	80	70	60
5	250	225	200	175	150
10	500	450	400	350	300

*The max. speed is the speed when the motor mounted by the customer can output a rotation speed of 3000 rpm.

Allowable overhang length

*Refer to page 152 for details.

Moment direction

MP MY MR

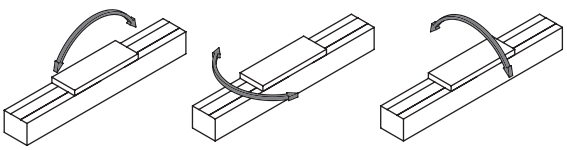

Dimensions Motor right-side mounting

● ETS-05-*****-R

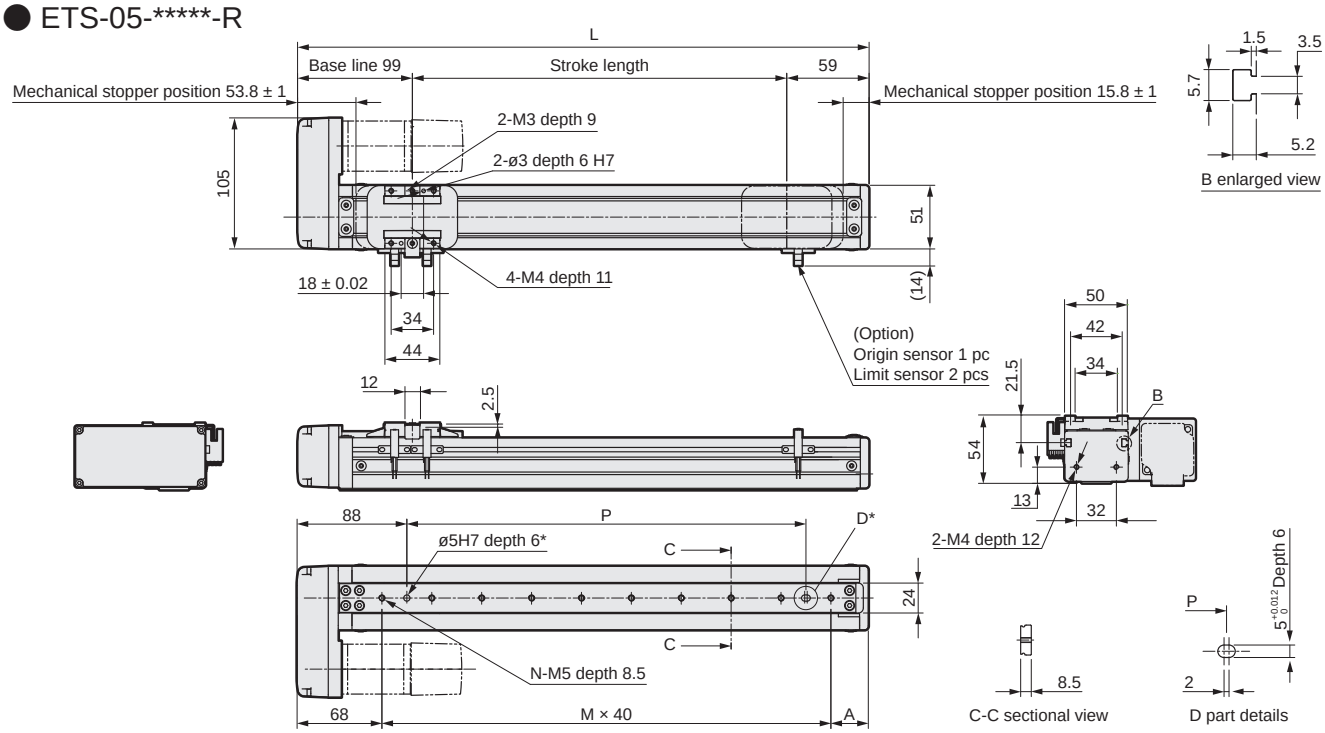

*Positioning pin hole (option)

Stroke length (mm)	50	100	150	200	250	300	350	400	450	500	550	600	650	700	750	800
L	208	258	308	358	408	458	508	558	608	658	708	758	808	858	908	958
A	60	30	40	50	60	30	40	50	60	30	40	50	60	30	40	50
M	2	4	5	6	7	9	10	11	12	14	15	16	17	19	20	21
N	3	5	6	7	8	10	11	12	13	15	16	17	18	20	21	22
P	40	120	160	200	240	320	360	400	440	520	560	600	640	720	760	800
Weight (kg)	1.7	1.8	1.9	2.0	2.1	2.3	2.4	2.4	2.6	2.7	2.8	2.9	3.0	3.1	3.2	3.3

Motor mounting part

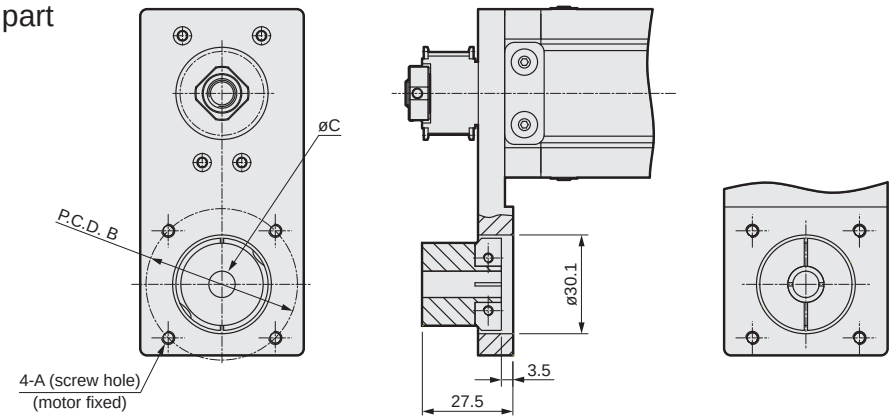

Mounted motor specification		A	B	C	Motor mounting bolt
M	100 W	M4	ø46	ø8	4-M4 × L12
Y	100 W	M4	ø46	ø8	4-M4 × L12
P	100 W	M3	ø45	ø8	4-M3 × L12
F	100 W	M4	ø46	ø8	4-M4 × L12

List of attachments

[Motor mounting parts]

Mounted motor specification	Timing belt, pulley	Motor capacity	Motor mounting bolt	
			Size	Quantity
M	Included at shipment	100 W	M4	2
Y			M4	2
P			M3	4
F			M4	2

[Origin sensor/Limit sensor]

Manufacturer	Model	Quantity
OMRON Corporation	EE-SX672	3

*Refer to page 156 for sensor specifications.

Dimensions Motor bottom mounting

● ETS-05-*****-D

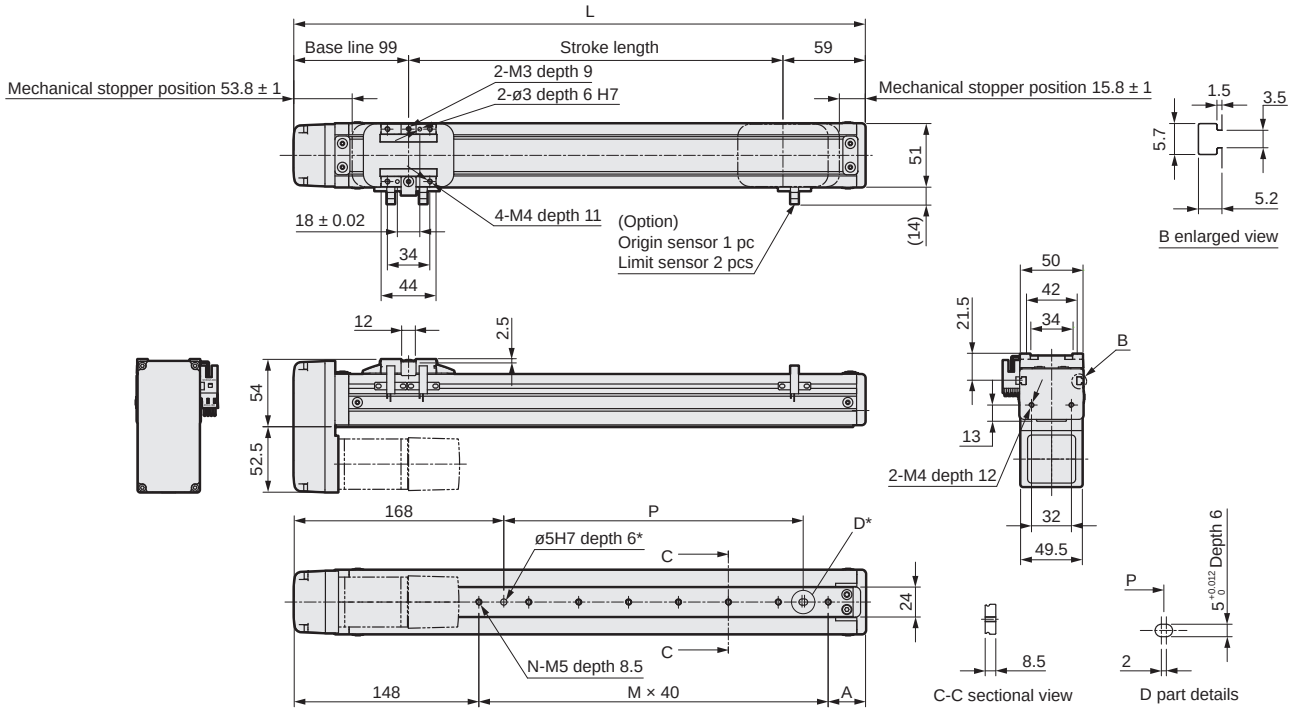

*Positioning pin hole (option)

Stroke length (mm)	50	100	150	200	250	300	350	400	450	500	550	600	650	700	750	800
L	208	258	308	358	408	458	508	558	608	658	708	758	808	858	908	958
A	60	30	40	50	60	30	40	50	60	30	40	50	60	30	40	50
M	0	2	3	4	5	7	8	9	10	12	13	14	15	17	18	19
N	1	3	4	5	6	8	9	10	11	13	14	15	16	18	19	20
P	0	40	80	120	160	240	280	320	360	440	480	520	560	640	680	720
Weight (kg)	1.7	1.8	1.9	2.0	2.1	2.3	2.4	2.4	2.6	2.7	2.8	2.9	3.0	3.1	3.2	3.3

Motor mounting part

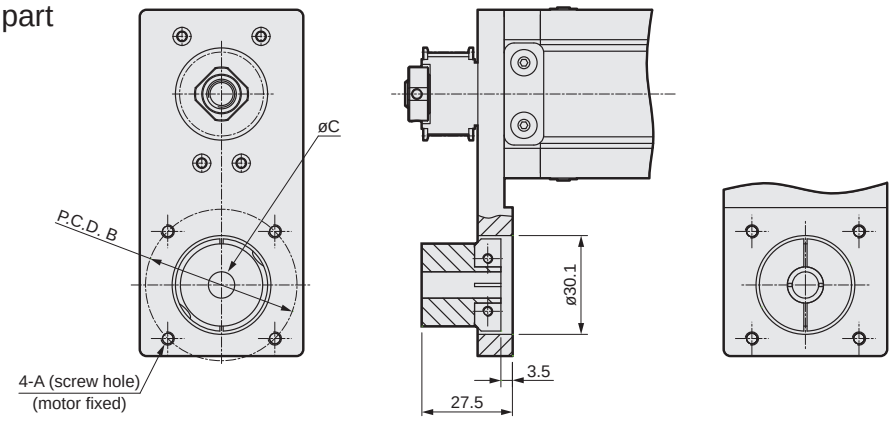

Mounted motor specification		A	B	C	Motor mounting bolt
M	100 W	M4	ø46	ø8	4-M4 × L12
Y	100 W	M4	ø46	ø8	4-M4 × L12
P	100 W	M3	ø45	ø8	4-M3 × L12
F	100 W	M4	ø46	ø8	4-M4 × L12

List of attachments

[Motor mounting parts]

Mounted motor specification	Timing belt, pulley	Motor capacity	Motor mounting bolt	
			Size	Quantity
M	Included at shipment	100 W	M4	2
Y			M4	2
P			M3	4
F			M4	2

[Origin sensor/Limit sensor]

Manufacturer	Model	Quantity
OMRON Corporation	EE-SX672	3

*Refer to page 156 for sensor specifications.

Dimensions Motor left-side mounting

● ETS-05-*****-L

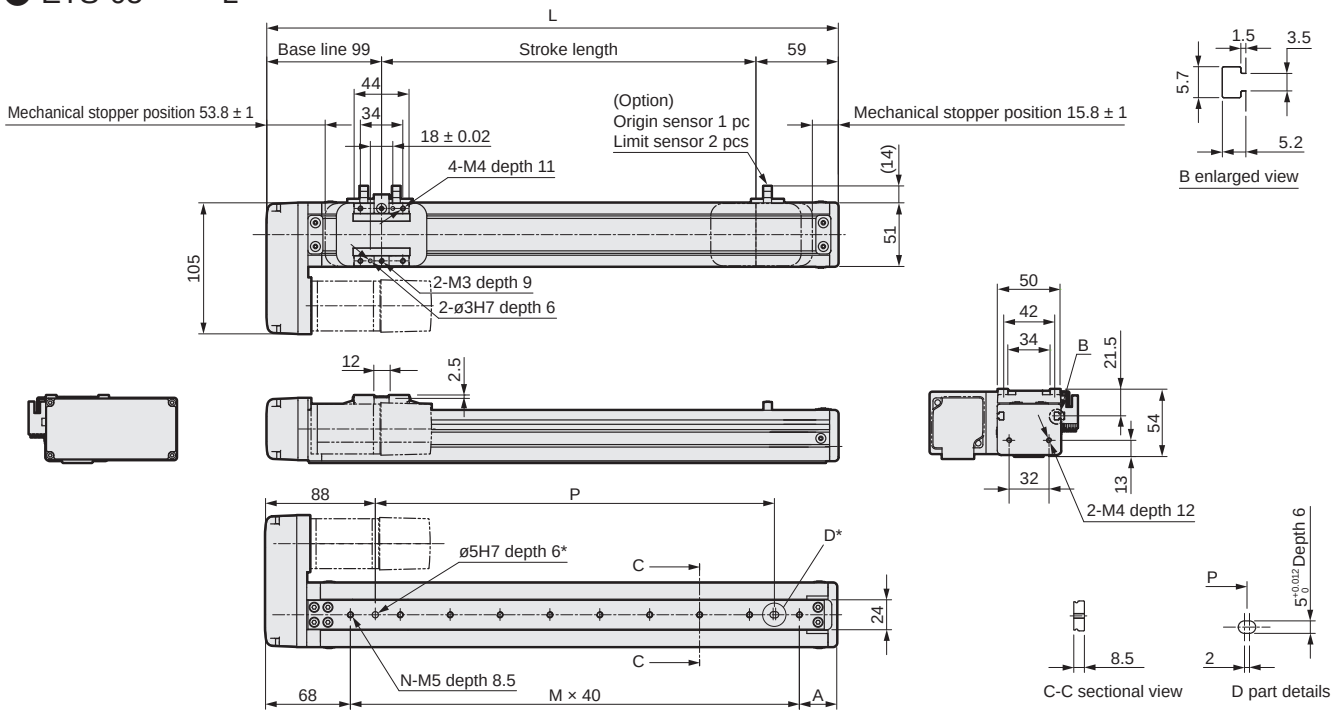

*Positioning pin hole (option)

Stroke length (mm)	50	100	150	200	250	300	350	400	450	500	550	600	650	700	750	800
L	208	258	308	358	408	458	508	558	608	658	708	758	808	858	908	958
A	60	30	40	50	60	30	40	50	60	30	40	50	60	30	40	50
M	2	4	5	6	7	9	10	11	12	14	15	16	17	19	20	21
N	3	5	6	7	8	10	11	12	13	15	16	17	18	20	21	22
P	40	120	160	200	240	320	360	400	440	520	560	600	640	720	760	800
Weight (kg)	1.7	1.8	1.9	2.0	2.1	2.3	2.4	2.4	2.6	2.7	2.8	2.9	3.0	3.1	3.2	3.3

Motor mounting part

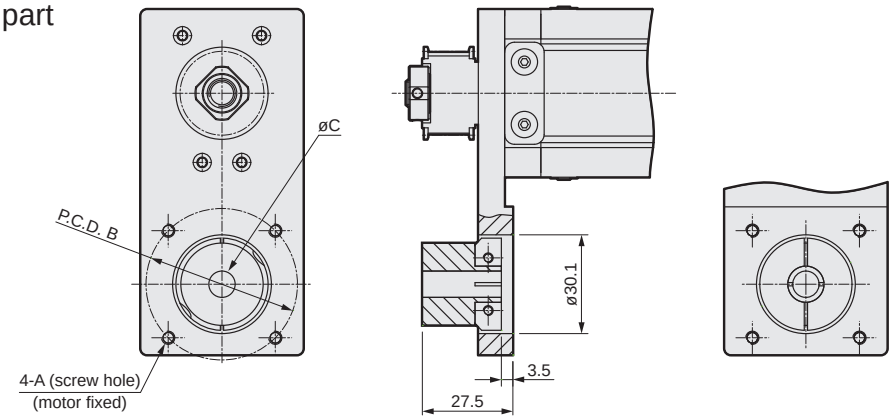

Mounted motor specification		A	B	C	Motor mounting bolt
M	100 W	M4	ø46	ø8	4-M4 × L12
Y	100 W	M4	ø46	ø8	4-M4 × L12
P	100 W	M3	ø45	ø8	4-M3 × L12
F	100 W	M4	ø46	ø8	4-M4 × L12

List of attachments

[Motor mounting parts]

Mounted motor specification	Timing belt, pulley	Motor capacity	Motor mounting bolt	
			Size	Quantity
M	Included at shipment	100 W	M4	2
Y			M4	2
P			M3	4
F			M4	2

[Origin sensor/Limit sensor]

Manufacturer	Model	Quantity
OMRON Corporation	EE-SX672	3

*Refer to page 156 for sensor specifications.

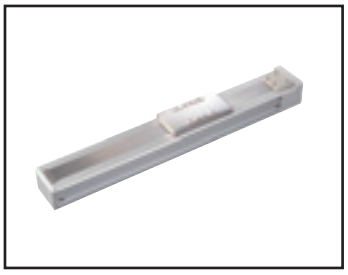

Electric actuator Ball screw drive Slider

ETS-06 Series

Straight motor mounting

● Servo motor capacity: 50 W (metal stopper specifications)/100 W

How to order

ETS - 06 - 05 040 - E M 1 N C B D P - M - X

(A) (B) (C) (D) (E) (F) (G) (H) (I) (J) (K) (L) (M)

(A) Body size

06	Body width 65 mm

(B) Screw lead

02	2 mm
05	5 mm
10	10 mm

(C) Stroke length

005 to 080	50 mm (In 50 mm increments) 800 mm

(D) Motor mounting direction

E	Straight mounting

(E) Mounted motor specification

M	Select the mounted motor specification from the table below.
Y	
P	
F	

(F) Motor capacity *1

0	50 W
1	100 W

(G) Brake

N	None

(H) Origin sensor (1 pc) *2 *3

N	None
C	Outside motor side
D	Outside motor opposite side

(I) Limit sensor (2 pcs) *2 *3

N	None
B	Outside

(J) Grease nipple *4 *5

N	None (Body mounting direction: Standard)
D	None (Body mounting direction: Bottom side)

(K) Positioning pin hole

N	None
P	Yes

(L) Magnet slider method

M	Yes

(M) Metal stopper specifications (ETS-X) *1

	Standard
X	Yes

*1: 50 W can be selected only when selecting metal stopper specifications.
*2: Origin sensor and limit sensor are available as a set. As it is both-or-nothing, select "None" for both.
*3: The user can adjust the sensor position. (Included at shipment)
*4: Select the body mounting direction. N (top side ø4.5 spot face) or D (M5 from bottom side bottom surface)
*5: "Body mounting direction: Standard" here refers to mounting from the top.

Manufacturer	50 W	100 W
Mitsubishi Electric Corporation	M	M
Delta Electronics Co., Ltd.	M	M
Sanyo Denki Co., Ltd.	M	M
YASKAWA Electric Corporation	Y	Y
Keyence Corporation	Y	Y
Panasonic Corporation	P	P
OMRON Corporation	M	M
Fuji Electric Co., Ltd.	M	M
FANUC CORPORATION	F	F
DENSO WAVE Incorporated (ETS-X only)	-	M
Bosch Rexroth AG	P	P
Rockwell Automation, Inc.	M	M
SIEMENS AG	M	M

*50 W supports only metal stopper specifications.
*Refer to page 89 for the motor model No.

Specifications

Applicable motor capacity *1			50 W/100 W servo motor		
Drive method			Ball screw ø12		
Ball screw accuracy grade			C7		
Stroke length		mm	50 to 800		
Screw lead		mm	2	5	10
Max. load capacity *1 *2	Horizontal	50 W	12	12	6
	kg	100 W	30	30	15
	Vertical	50 W	6	4	2
	kg	100 W	15	10	5
Max. speed		mm/s	100	250	500
Rated thrust *1 *2	50 W	N	427	171	85
	100 W	N	854	341	170
Repeatability		mm	±0.01		
Lost motion		mm	0.1 or less		
Dynamic allowable load		N	1209		
Static allowable moment		N·m	MP: 80, MY: 70, MR: 75		
Dynamic allowable moment		N·m	MP: 8.9, MY: 8.9, MR: 24.8		
Operating ambient temperature, humidity			0 to 40°C (no freezing) 35 to 80% RH (no condensation)		
Storage ambient temperature, humidity			-10 to 50°C (no freezing) 35 to 80% RH (no condensation)		
Atmosphere			No corrosive gas, explosive gas, or dust		

*1 50 W can be selected only with metal stopper (ETS-X) specifications.
*2 Rated thrust and max. load capacity are guideline values assuming that the motor mounted will output the rated torque.

Stroke and max. speed

(mm/s)

Screw lead \ Stroke length	100 to 600	650	700	750	800
2	100	90	80	70	60
5	250	225	200	175	150
10	500	450	400	350	300

*The max. speed is the speed when the motor mounted by the customer can output a rotation speed of 3000 rpm.

Allowable overhang length

*Refer to page 152 for details.

Moment direction

MP MY MR

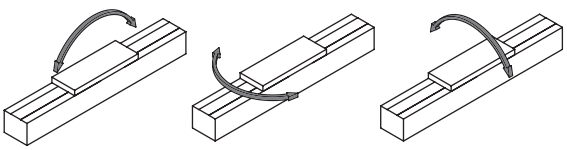

Dimensions Straight motor mounting

● ETS-06-*****-E

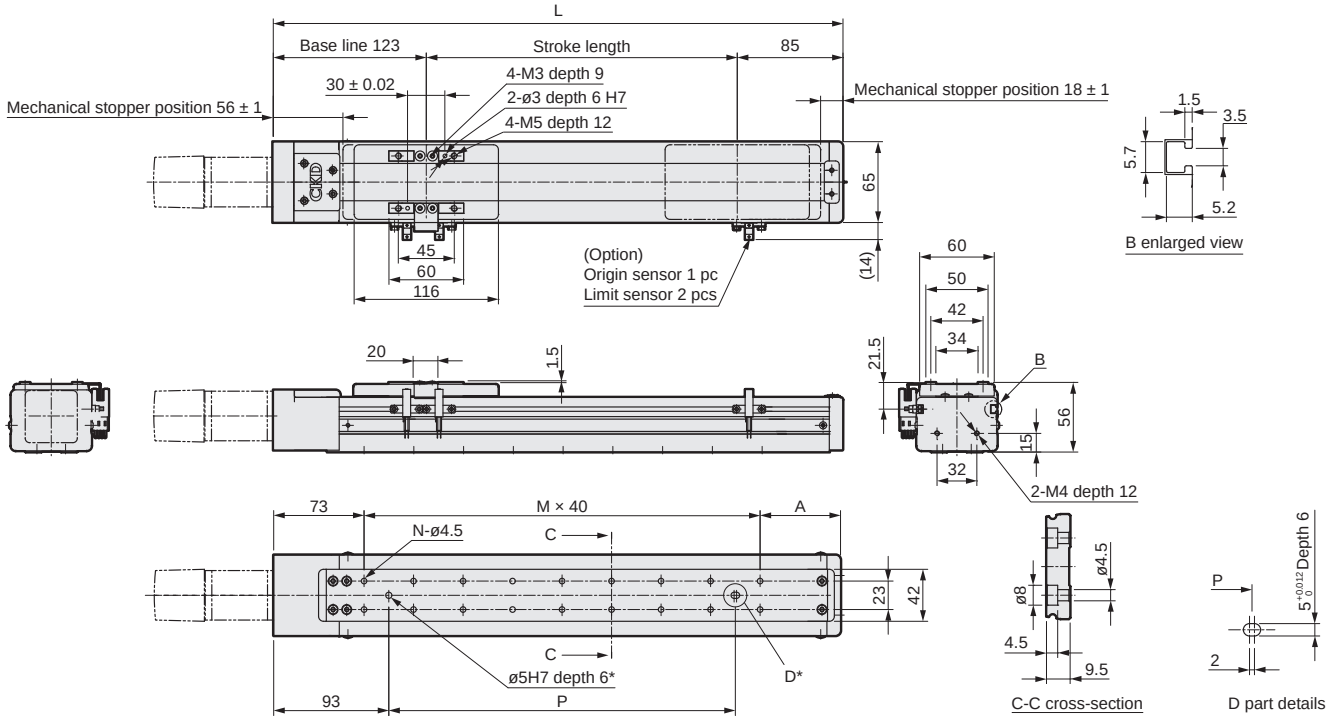

*Positioning pin hole (option)

Stroke length (mm)	50	100	150	200	250	300	350	400	450	500	550	600	650	700	750	800
L	258	308	358	408	458	508	558	608	658	708	758	808	858	908	958	1008
A	65	35	45	55	65	35	45	55	65	35	45	55	65	35	45	55
M	3	5	6	7	8	10	11	12	13	15	16	17	18	20	21	22
N	8	12	14	16	18	22	24	26	28	32	34	36	38	42	44	46
P	80	160	200	240	280	360	400	440	480	560	600	640	680	760	800	840
Weight (kg)	2.0	2.1	2.2	2.4	2.6	2.8	3.0	3.1	3.3	3.5	3.7	3.8	4.0	4.2	4.4	4.5

*N-M5 when J Grease nipple is D.

Motor mounting part

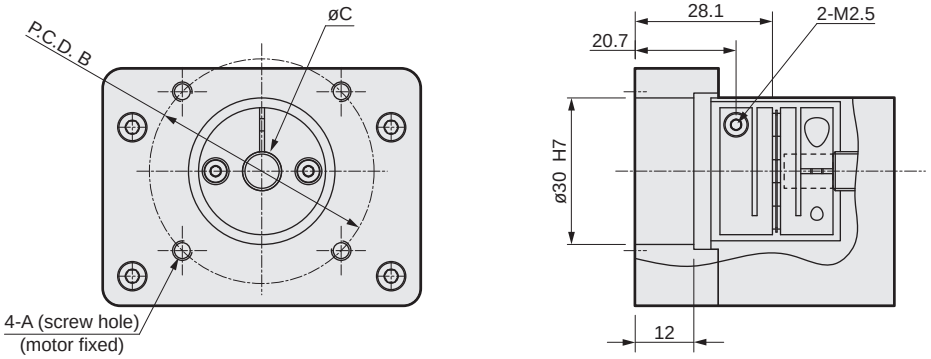

Mounted motor specification		A	B	C	Motor mounting bolt
M	50 W/100 W	M4	ø46	ø8	4-M4 × L12
Y	50 W/100 W	M4	ø46	ø8	4-M4 × L12
P	50 W/100 W	M3	ø45	ø8	4-M3 × L12
F	50 W/100 W	M4	ø46	ø8	4-M4 × L12

*50 W supports only metal stopper specifications.

List of attachments

[Motor mounting parts]

Mounted motor specification	Coupling	Motor capacity	Motor mounting bolt	
			Size	Quantity
M	Assembled at shipment	50 W/100 W	M4	2
Y			M4	2
P			M3	4
F			M4	2

*50 W supports only metal stopper specifications.

[Origin sensor/Limit sensor]

Manufacturer	Model	Quantity
OMRON Corporation	EE-SX672	3

*Refer to page 156 for sensor specifications.



Electric actuator Ball screw drive Slider

ETS-06 Series

Motor side mounting (left, right, bottom)

● Servo motor capacity: 50 W (metal stopper specifications)/100 W

How to order

ETS - 06 - 05 040 - R M 1 N C B D P - M - X

(A) (B) (C) (D) (E) (F) (G) (H) (I) (J) (K) (L) (M)

(A) Body size

06	Body width 65 mm

(B) Screw lead

02	2 mm
05	5 mm
10	10 mm

(C) Stroke length

005 to 080	50 mm (In 50 mm increments) 800 mm

(D) Motor mounting direction

R	Right mounting
D	Bottom mounting
L	Left mounting

(E) Mounted motor specification

M Y P F	Select the mounted motor specification from the table below.

(F) Motor capacity *1

0	50 W
1	100 W

(G) Brake

N	None

(H) Origin sensor (1 pc) *2 *3

N	None
C	Outside motor side
D	Outside motor opposite side

(I) Limit sensor (2 pcs) *2 *3

N	None
B	Outside

(J) Grease nipple *4 *5

N	None (Body mounting direction: Standard)
D	None (Body mounting direction: Bottom side)

(K) Positioning pin hole

N	None
P	Yes

(L) Magnet slider method

M	Yes

(M) Metal stopper specifications (ETS-X) *1

	Standard
X	Yes

Manufacturer	50 W	100 W
Mitsubishi Electric Corporation	M	M
Delta Electronics Co., Ltd.	M	M
Sanyo Denki Co., Ltd.	M	M
YASKAWA Electric Corporation	Y	Y
Keyence Corporation	Y	Y
Panasonic Corporation	P	P
OMRON Corporation	M	M
Fuji Electric Co., Ltd.	M	M
FANUC CORPORATION	F	F
DENSO WAVE Incorporated (ETS-X only)	-	M
Bosch Rexroth AG	P	P
Rockwell Automation, Inc.	M	M
SIEMENS AG	M	M

*50 W supports only metal stopper specifications.
*Refer to page 89 for the motor model No.

*1: 50 W can be selected only when selecting metal stopper specifications.
*2: Origin sensor and limit sensor are available as a set.
As it is both-or-nothing, select "None" for both.
*3: The user can adjust the sensor position. (Included at shipment)
*4: Select the body mounting direction. N (top side ø4.5 spot face) or D (M5 from bottom side bottom surface)
*5: "Body mounting direction: Standard" here refers to mounting from the top.

Specifications

Applicable motor capacity *1		50 W/100 W servo motor		
Drive method		Ball screw ø12		
Ball screw accuracy grade		C7		
Stroke length	mm	50 to 800		
Screw lead	mm	2	5	10
Max. load capacity *1 *2	Horizontal kg 50 W	12	12	6
	Horizontal kg 100 W	30	30	15
	Vertical kg 50 W	6	4	2
	Vertical kg 100 W	15	10	5
Max. speed	mm/s	100	250	500
Rated thrust *1 *2	50 W N	427	171	85
	100 W N	854	341	170
Repeatability	mm	±0.01		
Lost motion	mm	0.1 or less		
Dynamic allowable load	N	1209		
Static allowable moment	N·m	MP: 80, MY: 70, MR: 75		
Dynamic allowable moment	N·m	MP: 8.9, MY: 8.9, MR: 24.8		
Operating ambient temperature, humidity		0 to 40°C (no freezing) 35 to 80% RH (no condensation)		
Storage ambient temperature, humidity		-10 to 50°C (no freezing) 35 to 80% RH (no condensation)		
Atmosphere		No corrosive gas, explosive gas, or dust		

*1 50 W can be selected only with metal stopper (ETS-X) specifications.
*2 Rated thrust and max. load capacity are guideline values assuming that the motor mounted will output the rated torque.

Stroke and max. speed

(mm/s)

Screw lead \ Stroke length	100 to 600	650	700	750	800
2	100	90	80	70	60
5	250	225	200	175	150
10	500	450	400	350	300

*The max. speed is the speed when the motor mounted by the customer can output a rotation speed of 3000 rpm.

Allowable overhang length

*Refer to page 152 for details.

Moment direction

MP MY MR

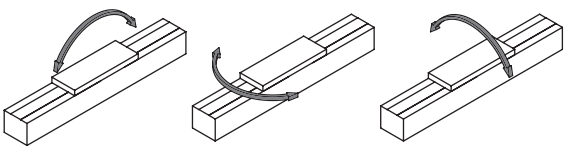

Dimensions Motor right-side mounting

● ETS-06-*****-R

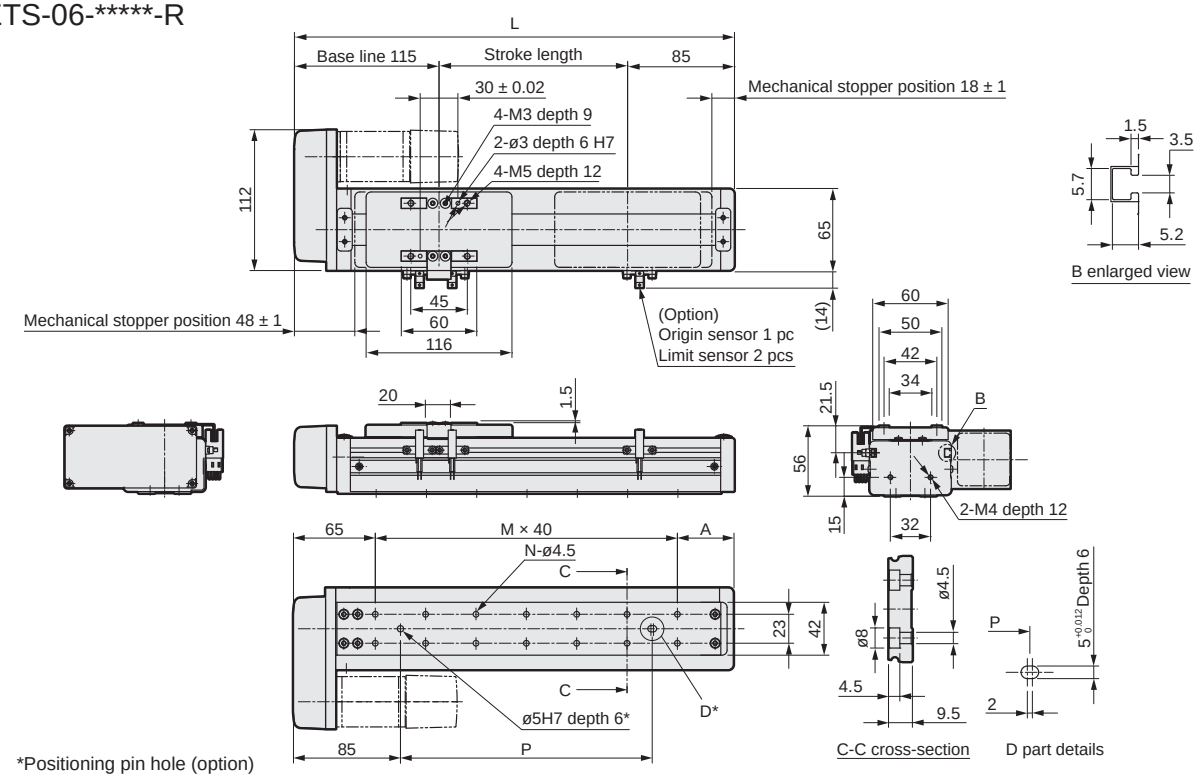

*Positioning pin hole (option)

Stroke length (mm)	50	100	150	200	250	300	350	400	450	500	550	600	650	700	750	800
L	250	300	350	400	450	500	550	600	650	700	750	800	850	900	950	1000
A	65	35	45	55	65	35	45	55	65	35	45	55	65	35	45	55
M	3	5	6	7	8	10	11	12	13	15	16	17	18	20	21	22
N	8	12	14	16	18	22	24	26	28	32	34	36	38	42	44	46
P	80	160	200	240	280	360	400	440	480	560	600	640	680	760	800	840
Weight (kg)	2.1	2.3	2.4	2.6	2.8	3.0	3.2	3.3	3.5	3.7	3.9	4.0	4.2	4.4	4.6	4.7

*N-M5 when J Grease nipple is D.

Motor mounting part

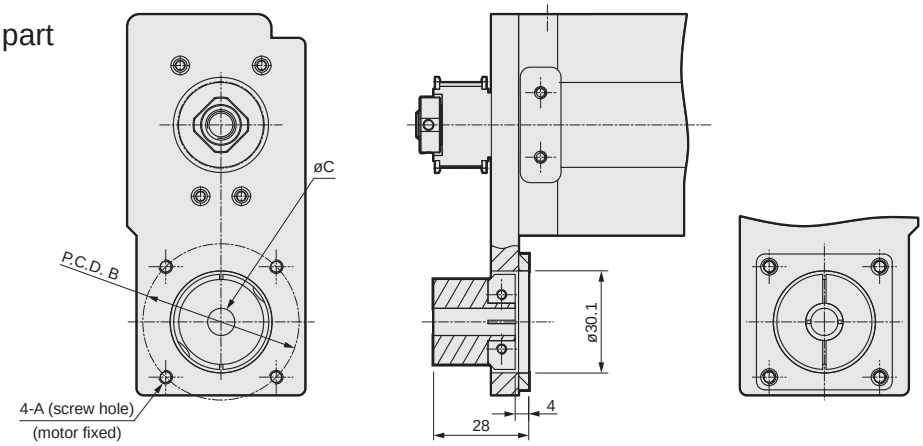

Mounted motor specification		A	B	C	Motor mounting bolt
M	50 W/100 W	M4	ø46	ø8	4-M4 × L12
Y	50 W/100 W	M4	ø46	ø8	4-M4 × L12
P	50 W/100 W	M3	ø45	ø8	4-M3 × L12
F	50 W/100 W	M4	ø46	ø8	4-M4 × L12

*50 W supports only metal stopper specifications.

List of attachments

[Motor mounting parts]

Mounted motor specification	Timing belt, pulley	Motor capacity	Motor mounting bolt	
			Size	Quantity
M	Included at shipment	50 W/100 W	M4	2
Y			M4	2
P			M3	4
F			M4	2

*50 W supports only metal stopper specifications.

[Origin sensor/Limit sensor]

Manufacturer	Model	Quantity
OMRON Corporation	EE-SX672	3

*Refer to page 156 for sensor specifications.

Dimensions Motor bottom mounting

● ETS-06-*****-D

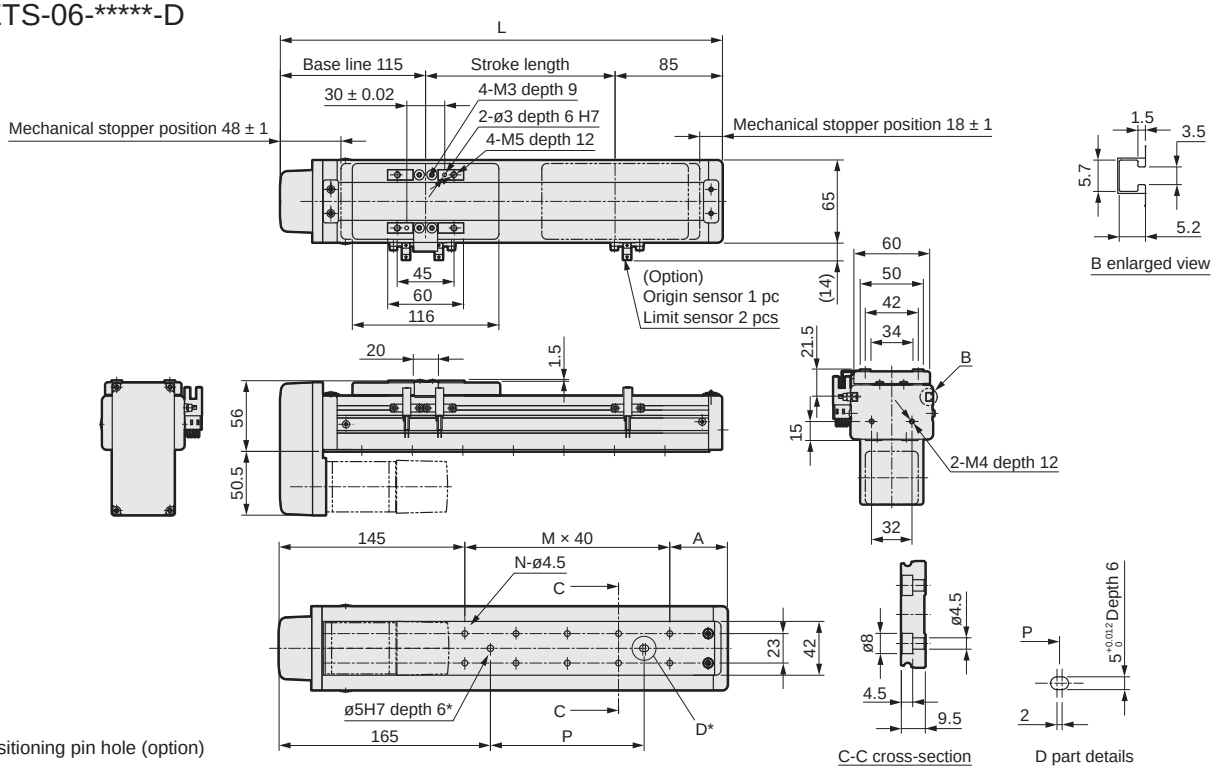

Stroke length (mm)	50	100	150	200	250	300	350	400	450	500	550	600	650	700	750	800
L	250	300	350	400	450	500	550	600	650	700	750	800	850	900	950	1000
A	65	35	45	55	65	35	45	55	65	35	45	55	65	35	45	55
M	1	3	4	5	6	8	9	10	11	13	14	15	16	18	19	20
N	4	8	10	12	14	18	20	22	24	28	30	32	34	38	40	42
P	0	80	120	160	200	280	320	360	400	480	520	560	600	680	720	760
Weight (kg)	2.1	2.3	2.4	2.6	2.8	3.0	3.2	3.3	3.5	3.7	3.9	4.0	4.2	4.4	4.6	4.7

*N-M5 when J Grease nipple is D.

Motor mounting part

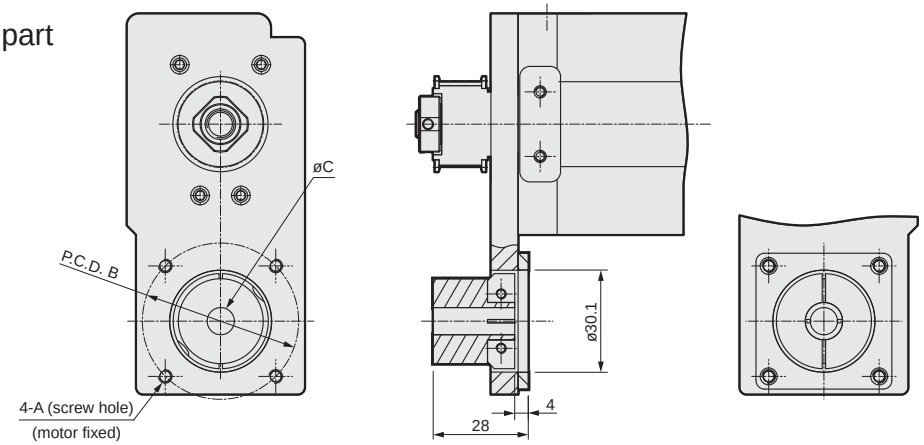

Mounted motor specification		A	B	C	Motor mounting bolt
M	50 W/100 W	M4	ø46	ø8	4-M4 × L12
Y	50 W/100 W	M4	ø46	ø8	4-M4 × L12
P	50 W/100 W	M3	ø45	ø8	4-M3 × L12
F	50 W/100 W	M4	ø46	ø8	4-M4 × L12

*50 W supports only metal stopper specifications.

List of attachments

[Motor mounting parts]

Mounted motor specification	Timing belt, pulley	Motor capacity	Motor mounting bolt	
			Size	Quantity
M	Included at shipment	50 W/100 W	M4	2
Y			M4	2
P			M3	4
F			M4	2

*50 W supports only metal stopper specifications.

[Origin sensor/Limit sensor]

Manufacturer	Model	Quantity
OMRON Corporation	EE-SX672	3

*Refer to page 156 for sensor specifications.

Dimensions Motor left-side mounting

● ETS-06-*****-L

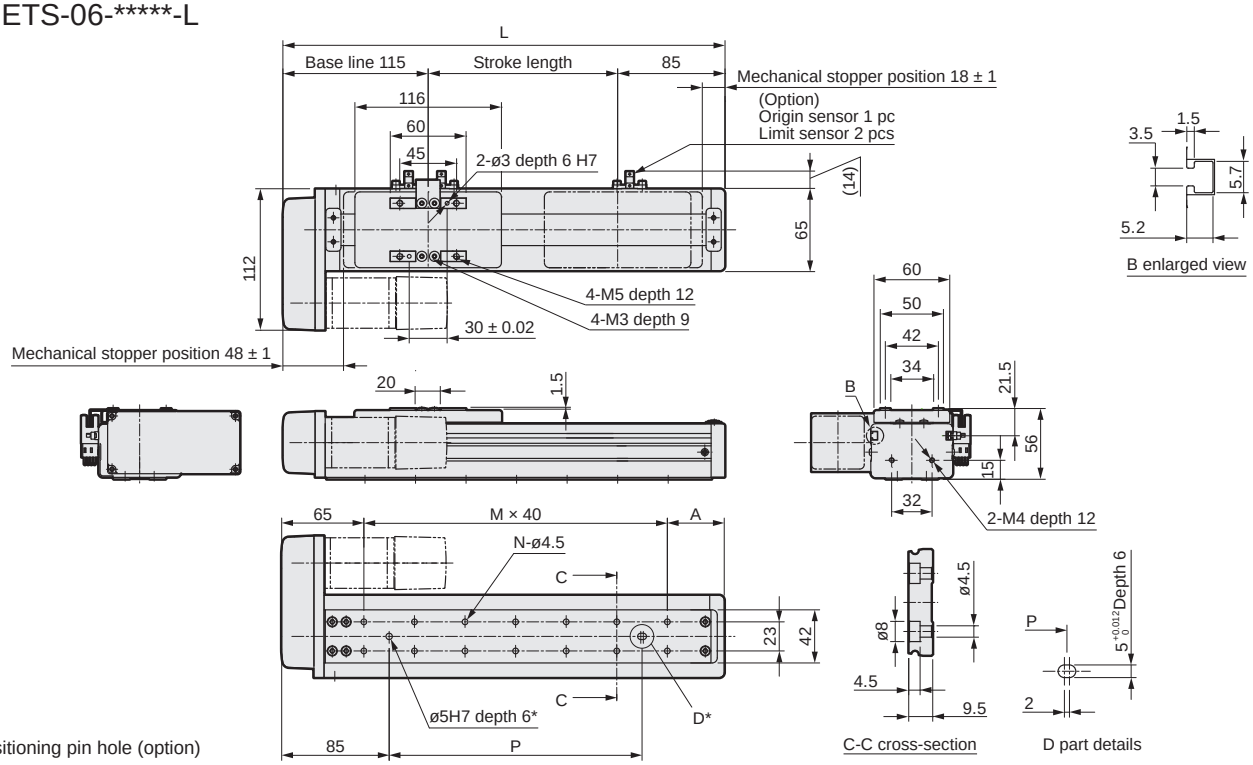

*Positioning pin hole (option)

Stroke length (mm)	50	100	150	200	250	300	350	400	450	500	550	600	650	700	750	800
L	250	300	350	400	450	500	550	600	650	700	750	800	850	900	950	1000
A	65	35	45	55	65	35	45	55	65	35	45	55	65	35	45	55
M	3	5	6	7	8	10	11	12	13	15	16	17	18	20	21	22
N	8	12	14	16	18	22	24	26	28	32	34	36	38	42	44	46
P	80	160	200	240	280	360	400	440	480	560	600	640	680	760	800	840
Weight (kg)	2.1	2.3	2.4	2.6	2.8	3.0	3.2	3.3	3.5	3.7	3.9	4.0	4.2	4.4	4.6	4.7

*N-M5 when J Grease nipple is D.

Motor mounting part

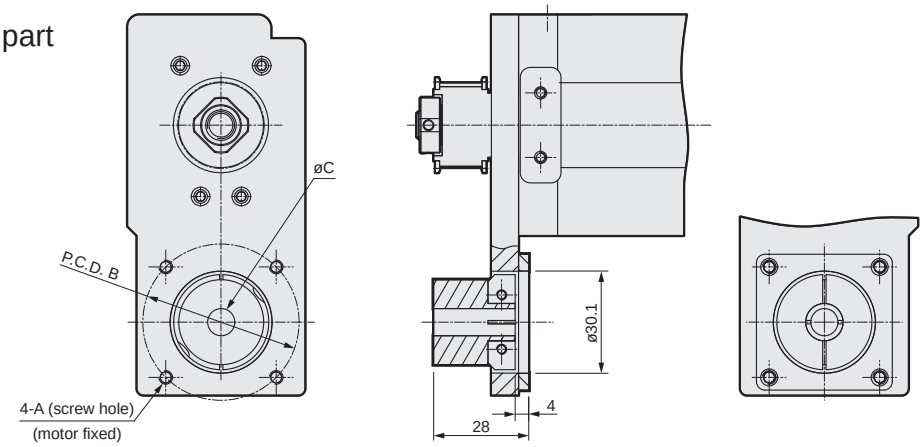

Mounted motor specification		A	B	C	Motor mounting bolt
M	50 W/100 W	M4	ø46	ø8	4-M4 × L12
Y	50 W/100 W	M4	ø46	ø8	4-M4 × L12
P	50 W/100 W	M3	ø45	ø8	4-M3 × L12
F	50 W/100 W	M4	ø46	ø8	4-M4 × L12

*50 W supports only metal stopper specifications.

List of attachments

[Motor mounting parts]

Mounted motor specification	Timing belt, pulley	Motor capacity	Motor mounting bolt	
			Size	Quantity
M	Included at shipment	50 W/100 W	M4	2
Y			M4	2
P			M3	4
F			M4	2

*50 W supports only metal stopper specifications.

[Origin sensor/Limit sensor]

Manufacturer	Model	Quantity
OMRON Corporation	EE-SX672	3

*Refer to page 156 for sensor specifications.



Electric actuator Ball screw drive Slider

ETS-10 Series

Straight motor mounting, built-in mounting

● Servo motor capacity: 100 W/200 W

How to order

ETS - 10 - 05 - 005 - E M 1 N N N N N - X

(A) (B) (C) (D) (E) (F) (G) (H) (I) (J) (K) (L)

(A) Body size

10	Body width 102 mm

(B) Screw lead

05	5 mm
10	10 mm
16	16 mm
20	20 mm

(C) Stroke length

005 to 105	50 mm (In 50 mm increments) 1050 mm

(D) Motor mounting direction *1 *2

E	Straight mounting
B	Built-in mounting

(E) Mounted motor specification

M	Select the mounted motor specification from the table below.
Y	
P	
F	

(F) Motor capacity *1

1	100 W
2	200 W

(G) Brake *2

N	None
B	Yes

(H) Origin sensor (1 pc) *3 *4 *5 *6 *8

N	None
A	Inside motor side
B	Inside motor opposite side
C	Outside motor side
D	Outside motor opposite side

(I) Limit sensor (2 pcs) *3 *4 *5 *6 *8

N	None
A	Inside
B	Outside

(J) Grease nipple *6 *7 *8

N	None (Body mounting direction: Standard)
R	Right
L	Left

(K) Positioning pin hole

N	None
P	Yes

(L) Metal stopper specifications (ETS-X) *1

	Standard
X	Yes

Manufacturer	100 W	200 W
Mitsubishi Electric Corporation	M	M
Delta Electronics Co., Ltd.	M	M
Sanyo Denki Co., Ltd.	M	M
YASKAWA Electric Corporation	Y	Y
Keyence Corporation	Y	Y
Panasonic Corporation	P	P
OMRON Corporation	M	P
Fuji Electric Co., Ltd.	M	M
FANUC CORPORATION	F	F
DENSO WAVE Incorporated (ETS-X only)	M	M
Bosch Rexroth AG	P	P
Rockwell Automation, Inc.	M	M
SIEMENS AG	M	M

*Refer to page 89 for the motor model No.

*1: The built-in mounting motor mounting direction cannot be selected for the 200 W motor capacity.
Built-in mounting cannot be selected with metal stopper specifications either.
*2: "Yes" to the Brake can be selected only when the motor mounting direction is built-in mounting.
*3: Origin sensor and limit sensor are available as a set. As it is both-or-nothing, select "None" for both.
*4: Origin sensor B and limit sensor A cannot be combined.
*5: For sensor inside mounting, the user cannot adjust the position. (Assembled at shipment)
For sensor outside mounting, the user can adjust the position. (Included at shipment)
*6: Contact CKD to use the origin sensor, limit sensor and grease nipple in the same direction.
*7: "Body mounting direction: Standard" here indicates that either top or bottom mounting is possible.
*8: For sensor interior mounting, select "None" for the grease nipple.

Specifications

Applicable motor capacity		100 W/200 W servo motor			
Drive method		Ball screw ø16			
Ball screw accuracy grade		C7			
Stroke length	mm	50 to 1050			
Screw lead	mm	5	10	16	20
Max. load capacity *1	Horizontal kg	50	30	22	18
	Vertical kg	12	8	5	3
Max. speed	mm/s	250	500	800	1000
Rated thrust *1	100 W N	341	170	106	85
	200 W N	683	341	213	174
Repeatability	mm	±0.01			
Lost motion	mm	0.1 or less			
Dynamic allowable load	N	2651			
Static allowable moment	N·m	MP: 110, MY: 110, MR: 120			
Dynamic allowable moment	N·m	MP: 24.1, MY: 24.1, MR: 24.8			
Operating ambient temperature, humidity		0 to 40°C (no freezing) 35 to 80% RH (no condensation)			
Storage ambient temperature, humidity		-10 to 50°C (no freezing) 35 to 80% RH (no condensation)			
Atmosphere		No corrosive gas, explosive gas, or dust			

*1 Rated thrust and max. load capacity are guideline values assuming that the motor mounted will output the rated torque.

Stroke and max. speed

(mm/s)

Screw lead \ Stroke length	100 to 750	800	850	900	950	1050
5	250	225	200	175	150	125
10	500	450	400	350	300	250
16	800	720	640	560	480	400
20	1000	900	800	700	600	500

*The max. speed is the speed when the motor mounted by the customer can output a rotation speed of 3000 rpm.

Allowable overhang length

*Refer to page 152 for details.

Moment direction

MP MY MR

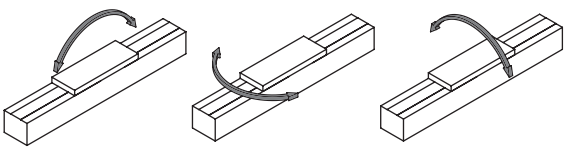

Dimensions Straight motor mounting

● ETS-10-*****-E

· Refer to page 158 for grease nipple dimensions.

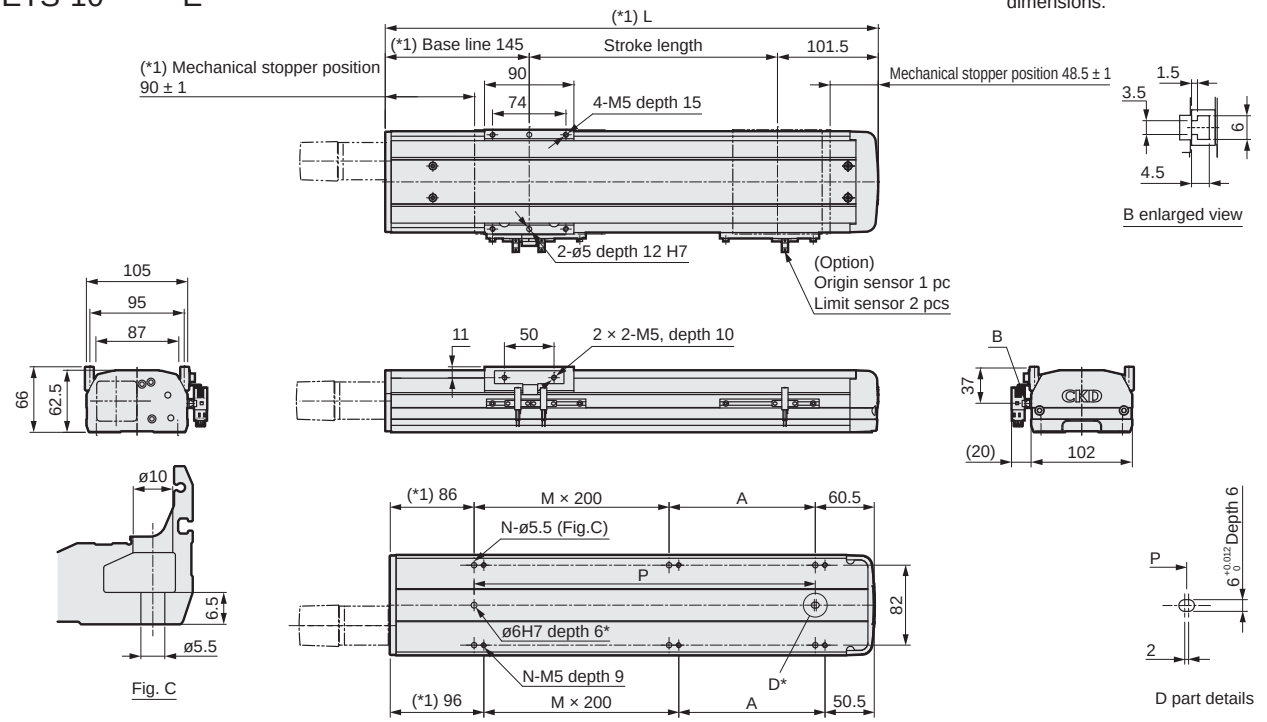

B enlarged view

Fig. C

D part details

*Positioning pin hole (option)

Stroke length (mm)	50	100	150	200	250	300	350	400	450	500	550	600	650	700	750	800	850	900	950	1000	1050
L	296.5	346.5	396.5	446.5	496.5	546.5	596.5	646.5	696.5	746.5	796.5	846.5	896.5	946.5	996.5	1046.5	1096.5	1146.5	1196.5	1246.5	1296.5
A	150	200	50	100	150	200	50	100	150	200	50	100	150	200	50	100	150	200	50	100	150
M	0	0	1	1	1	1	2	2	2	2	3	3	3	3	4	4	4	4	5	5	5
N	4	4	6	6	6	6	8	8	8	8	10	10	10	10	12	12	12	12	14	14	14
P	150	200	250	300	350	400	450	500	550	600	650	700	750	800	850	900	950	1000	1050	1100	1150
Weight (kg)	4.5	4.9	5.2	5.6	6.0	6.4	6.8	7.2	7.6	7.9	8.3	8.7	9.1	9.5	9.9	10.3	10.6	11.0	11.4	11.8	12.2

(*1) The 200 W type motor capacity is +4 mm.

Motor mounting part

● ETS-10-100W

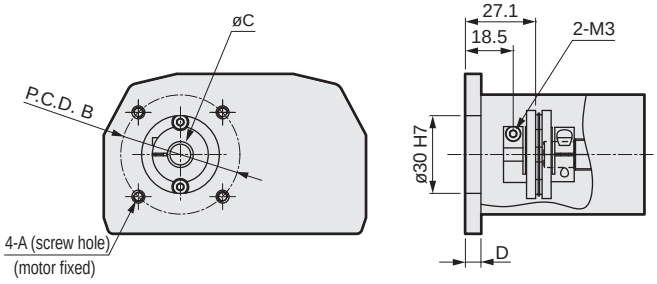

● ETS-10-200W

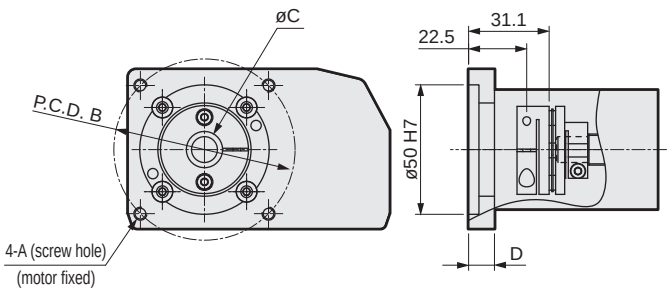

Mounted motor specification		A	B	C	D	Motor mounting bolt
M	100 W/200 W	M4/M5	ø46/ø70	ø8/ø14	6/10	4-M4 × L10/4-M5 × L18
Y	100 W/200 W	M4/M5	ø46/ø70	ø8/ø14	6/10	4-M4 × L10/4-M5 × L18
P	100 W/200 W	M3/M4	ø45/ø70	ø8/ø11	6/10	4-M3 × L10/4-M4 × L18
F	100 W/200 W	M4/M5	ø46/ø70	ø8/ø19	6/4	4-M4 × L10/4-M5 × L16

List of attachments

[Motor mounting parts]

Mounted motor specification	Coupling	Motor capacity	Motor mounting bolt	
			Size	Quantity
M	Assembled at shipment	100 W/200 W	M4/M5	2/4
Y			M4/M5	2/4
P			M3/M4	4
F			M4/M5	2/4

[Origin sensor/Limit sensor]

Manufacturer	Model	Quantity
OMRON Corporation	EE-SX672	3

*Refer to page 156 for sensor specifications.

Dimensions Motor built-in mounting

● ETS-10-*****-B

· Refer to page 158 for grease nipple dimensions.

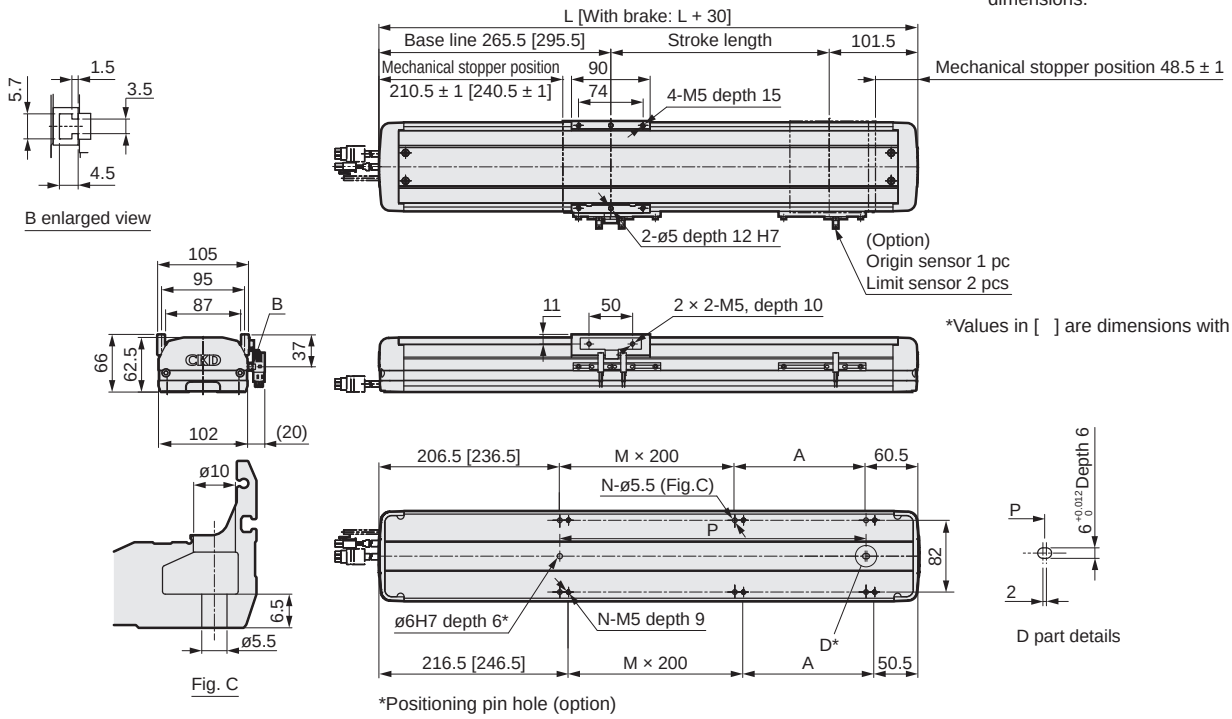

*Values in [ ] are dimensions with brake.

Stroke length (mm)		50	100	150	200	250	300	350	400	450	500	550	600	650	700	750	800	850	900	950	1000	1050
L		417	467	517	567	617	667	717	767	817	867	917	967	1017	1067	1117	1167	1217	1267	1317	1367	1417
A		150	200	50	100	150	200	50	100	150	200	50	100	150	200	50	100	150	200	50	100	150
M		0	0	1	1	1	1	2	2	2	2	3	3	3	3	4	4	4	4	5	5	5
N		4	4	6	6	6	6	8	8	8	8	10	10	10	10	12	12	12	12	14	14	14
P		150	200	250	300	350	400	450	500	550	600	650	700	750	800	850	900	950	1000	1050	1100	1150
Weight (kg)	Without brake	6.0	6.7	7.4	8.1	8.8	9.5	10.2	10.9	11.6	12.4	13.1	13.8	14.5	15.2	15.9	16.6	17.4	18.1	18.8	19.5	20.2
	With brake	6.4	7.1	7.8	8.5	9.2	9.9	10.6	11.4	12.1	12.8	13.5	14.2	14.9	15.6	16.4	17.1	17.8	18.5	19.2	19.9	20.6

Motor mounting part

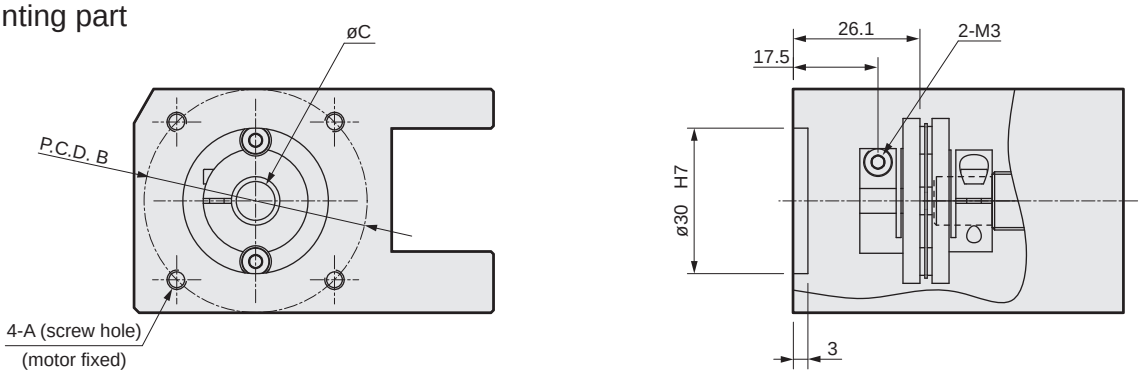

Mounted motor specification		A	B	C	Motor mounting bolt
M	100 W	M4	ø46	ø8	4-M4 × L10
Y	100 W	M4	ø46	ø8	4-M4 × L10
P	100 W	M3	ø45	ø8	4-M3 × L10

List of attachments

[Motor mounting parts]

Mounted motor specification	Coupling	Motor capacity	Motor mounting bolt	
			Size	Quantity
M	Assembled at shipment	100 W	M4	2
Y			M4	2
P			M3	4

[Origin sensor/Limit sensor]

Manufacturer	Model	Quantity
OMRON Corporation	EE-SX672	3

*Refer to page 156 for sensor specifications.

MEMO



Electric actuator Ball screw drive Slider

ETS-10 Series

Motor side mounting (left, right, bottom)

● Servo motor capacity: 100 W/200 W

How to order

ETS - 10 - 05 - 005 - R M 1 N N N L N - X

(A) (B) (C) (D) (E) (F) (G) (H) (I) (J) (K) (L)

(A) Body size

10	Body width 102 mm

(B) Screw lead

05	5 mm
10	10 mm
16	16 mm
20	20 mm

(C) Stroke length

005 to 105	50 mm (In 50 mm increments) 1050 mm

(D) Motor mounting direction *6

R	Right mounting
D	Bottom mounting
L	Left mounting

(E) Mounted motor specification

M Y P F	Select the mounted motor specification from the table below.

(F) Motor capacity

1	100 W
2	200 W

(G) Brake

N	None

(H) Origin sensor (1 pc) *1 *2 *3 *4 *7

N	None
A	Inside motor side
B	Inside motor opposite side
C	Outside motor side
D	Outside motor opposite side

(I) Limit sensor (2 pcs) *1 *2 *3 *4 *7

N	None
A	Inside
B	Outside

(J) Grease nipple *4 *5 *6 *7

N	None (Body mounting direction: Standard)
R	Right
L	Left

(K) Positioning pin hole

N	None
P	Yes

(L) Metal stopper specifications (ETS-X)

	Standard
X	Yes

Manufacturer	100 W	200 W
Mitsubishi Electric Corporation	M	M
Delta Electronics Co., Ltd.	M	M
Sanyo Denki Co., Ltd.	M	M
YASKAWA Electric Corporation	Y	Y
Keyence Corporation	Y	Y
Panasonic Corporation	P	P
OMRON Corporation	M	P
Fuji Electric Co., Ltd.	M	M
FANUC CORPORATION	F	F
DENSO WAVE Incorporated (ETS-X only)	M	M
Bosch Rexroth AG	P	P
Rockwell Automation, Inc.	M	M
SIEMENS AG	M	M

*Refer to page 89 for the motor model No.

*1: Origin sensor and limit sensor are available as a set.
As it is both-or-nothing, select "None" for both.
*2: Origin sensor B and limit sensor A cannot be combined.
*3: For sensor inside mounting, the user cannot adjust the position. (Assembled at shipment)
For sensor outside mounting, the user can adjust the position. (Included at shipment)
*4: Contact CKD to use the origin sensor, limit sensor and grease nipple in the same direction.
*5: "Body mounting direction: Standard" here indicates that either top or bottom mounting is possible.
*6: When selecting motor mounting direction R, grease nipple R cannot be selected.
When selecting L, grease nipple L cannot be selected.
*7: For sensor interior mounting, select "None" for the grease nipple.

Specifications

Applicable motor capacity		100 W/200 W servo motor			
Drive method		Ball screw ø16			
Ball screw accuracy grade		C7			
Stroke length	mm	50 to 1050			
Screw lead	mm	5	10	16	20
Max. load capacity *1	Horizontal kg	50	30	22	18
	Vertical kg	12	8	5	3
Max. speed	mm/s	250	500	800	1000
Rated thrust *1	100 W N	341	170	106	85
	200 W N	683	341	213	174
Repeatability	mm	±0.01			
Lost motion	mm	0.1 or less			
Dynamic allowable load	N	2651			
Static allowable moment	N·m	MP: 110, MY: 110, MR: 120			
Dynamic allowable moment	N·m	MP: 24.1, MY: 24.1, MR: 24.8			
Operating ambient temperature, humidity		0 to 40°C (no freezing) 35 to 80% RH (no condensation)			
Storage ambient temperature, humidity		-10 to 50°C (no freezing) 35 to 80% RH (no condensation)			
Atmosphere		No corrosive gas, explosive gas, or dust			

*1 Rated thrust and max. load capacity are guideline values assuming that the motor mounted will output the rated torque.

Stroke and max. speed

(mm/s)

Screw lead \ Stroke length	100 to 750	800	850	900	950	1050
5	250	225	200	175	150	125
10	500	450	400	350	300	250
16	800	720	640	560	480	400
20	1000	900	800	700	600	500

*The max. speed is the speed when the motor mounted by the customer can output a rotation speed of 3000 rpm.

Allowable overhang length

*Refer to page 152 for details.

Moment direction

MP MY MR

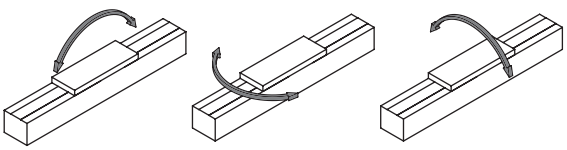

Dimensions Motor right-side mounting

● ETS-10-*****-R

· Refer to page 158 for grease nipple dimensions.

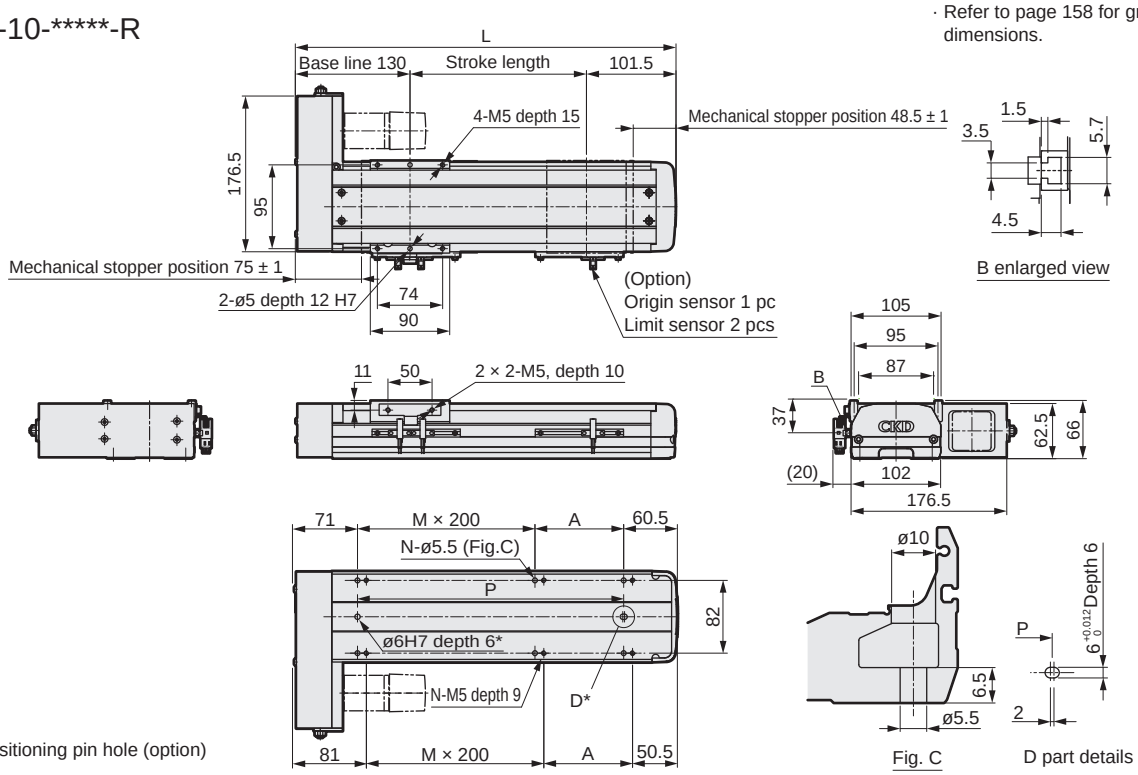

*Positioning pin hole (option)

Stroke length (mm)	50	100	150	200	250	300	350	400	450	500	550	600	650	700	750	800	850	900	950	1000	1050
L	281.5	331.5	381.5	431.5	481.5	531.5	581.5	631.5	681.5	731.5	781.5	831.5	881.5	931.5	981.5	1031.5	1081.5	1131.5	1181.5	1231.5	1281.5
A	150	200	50	100	150	200	50	100	150	200	50	100	150	200	50	100	150	200	50	100	150
M	0	0	1	1	1	1	2	2	2	2	3	3	3	3	4	4	4	4	5	5	5
N	4	4	6	6	6	6	8	8	8	8	10	10	10	10	12	12	12	12	14	14	14
P	150	200	250	300	350	400	450	500	550	600	650	700	750	800	850	900	950	1000	1050	1100	1150
Weight (kg)	5.2	5.5	5.8	6.2	6.6	7.0	7.4	7.8	8.2	8.5	8.9	9.3	9.7	10.1	10.5	10.9	11.2	11.6	12.0	12.4	12.8

Motor mounting part

● ETS-10-100W

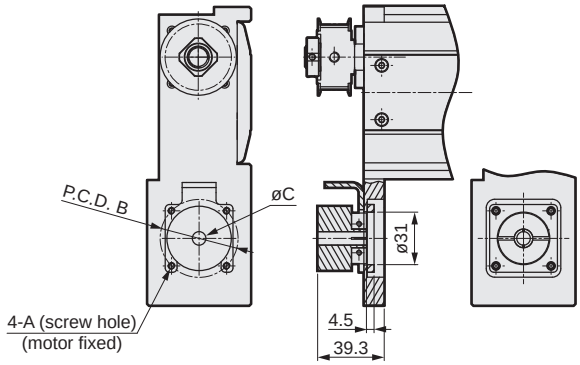

● ETS-10-200W

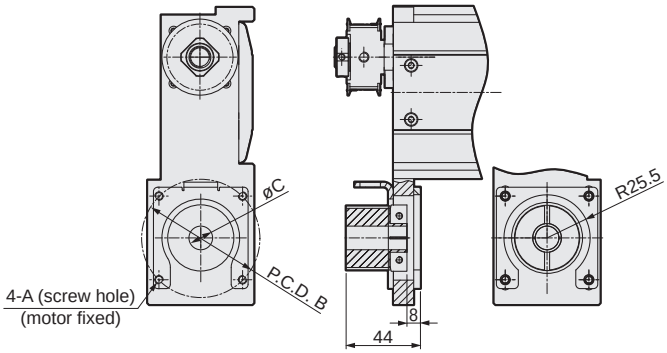

Mounted motor specification		A	B	C	Motor mounting bolt
M	100 W/200 W	M4/M5	ø46/ø70	ø8/ø14	4-M4 × L10/4-M5 × L25
Y	100 W/200 W	M4/M5	ø46/ø70	ø8/ø14	4-M4 × L10/4-M5 × L25
P	100 W/200 W	M3/M4	ø45/ø70	ø8/ø11	4-M3 × L10/4-M4 × L25
F	100 W/200 W	M4/M5	ø46/ø70	ø8/ø9	4-M3 × L10/4-M5 × L25

List of attachments

[Motor mounting parts]

Mounted motor specification	Timing belt, pulley	Motor capacity	Motor mounting bolt	
			Size	Quantity
M	Included at shipment	100 W/200 W	M4/M5	2/4
Y			M4/M5	2/4
P			M3/M4	4
F			M4/M5	2/4

[Origin sensor/Limit sensor]

Manufacturer	Model	Quantity
OMRON Corporation	EE-SX672	3

*Refer to page 156 for sensor specifications.

Dimensions Motor bottom mounting

● ETS-10-*****-D

· Refer to page 158 for grease nipple dimensions.

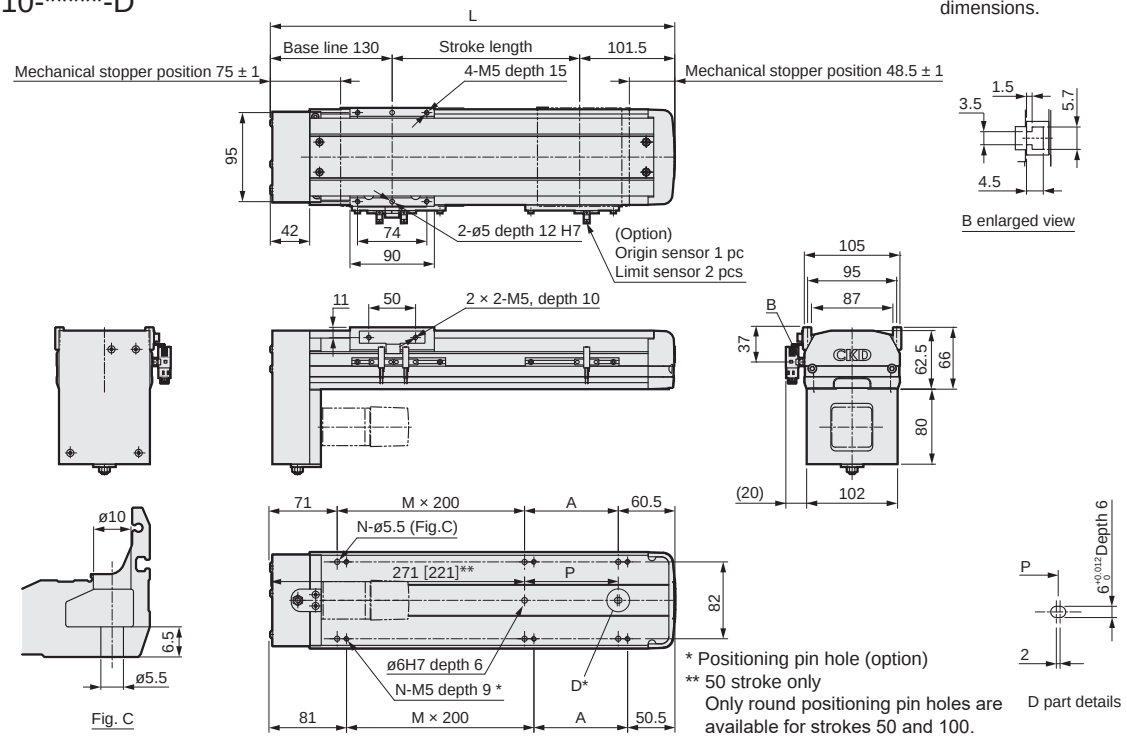

Stroke length (mm)	50	100	150	200	250	300	350	400	450	500	550	600	650	700	750	800	850	900	950	1000	1050
L	281.5	331.5	381.5	431.5	481.5	531.5	581.5	631.5	681.5	731.5	781.5	831.5	881.5	931.5	981.5	1031.5	1081.5	1131.5	1181.5	1231.5	1281.5
A	150	200	50	100	150	200	50	100	150	200	50	100	150	200	50	100	150	200	50	100	150
M	0	0	1	1	1	1	2	2	2	2	3	3	3	3	4	4	4	4	5	5	5
N	4	4	6	6	6	6	8	8	8	8	10	10	10	10	12	12	12	12	14	14	14
P	0	0	50	100	150	200	250	300	350	400	450	500	550	600	650	700	750	800	850	900	950
Weight (kg)	5.2	5.7	6.0	6.4	6.6	7.0	7.6	8.0	8.4	8.7	9.1	9.5	9.9	10.3	10.7	11.1	11.4	11.8	12.2	12.6	13.0

Motor mounting part

● ETS-10-100W

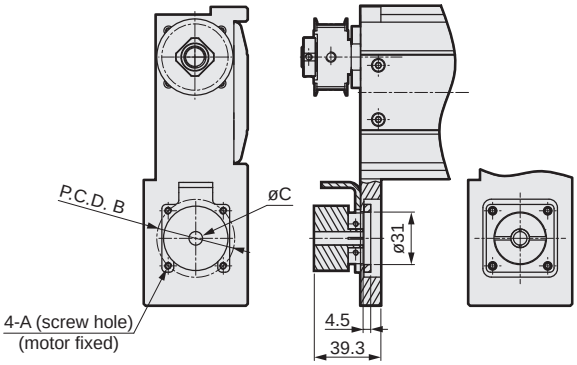

● ETS-10-200W

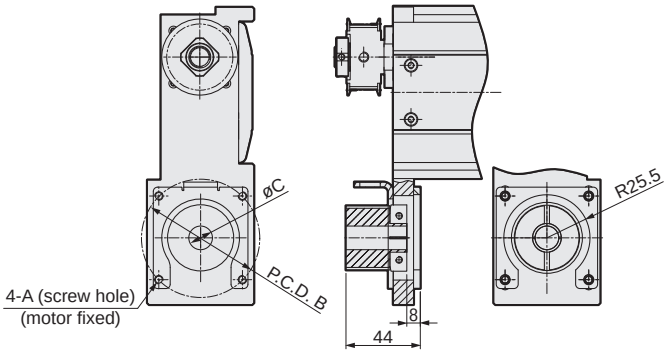

Mounted motor specification		A	B	C	Motor mounting bolt
M	100 W/200 W	M4/M5	ø46/ø70	ø8/ø14	4-M4 × L10/4-M5 × L25
Y	100 W/200 W	M4/M5	ø46/ø70	ø8/ø14	4-M4 × L10/4-M5 × L25
P	100 W/200 W	M3/M4	ø45/ø70	ø8/ø11	4-M3 × L10/4-M4 × L25
F	100 W/200 W	M4/M5	ø46/ø70	ø8/ø9	4-M4 × L10/4-M5 × L25

List of attachments

[Motor mounting parts]

Mounted motor specification	Timing belt, pulley	Motor capacity	Motor mounting bolt	
			Size	Quantity
M	Included at shipment	100 W/200 W	M4/M5	2/4
Y			M4/M5	2/4
P			M3/M4	4
F			M4/M5	2/4

[Origin sensor/Limit sensor]

Manufacturer	Model	Quantity
OMRON Corporation	EE-SX672	3

*Refer to page 156 for sensor specifications.

Dimensions Motor left-side mounting

● ETS-10-*****-L

· Refer to page 158 for grease nipple dimensions.

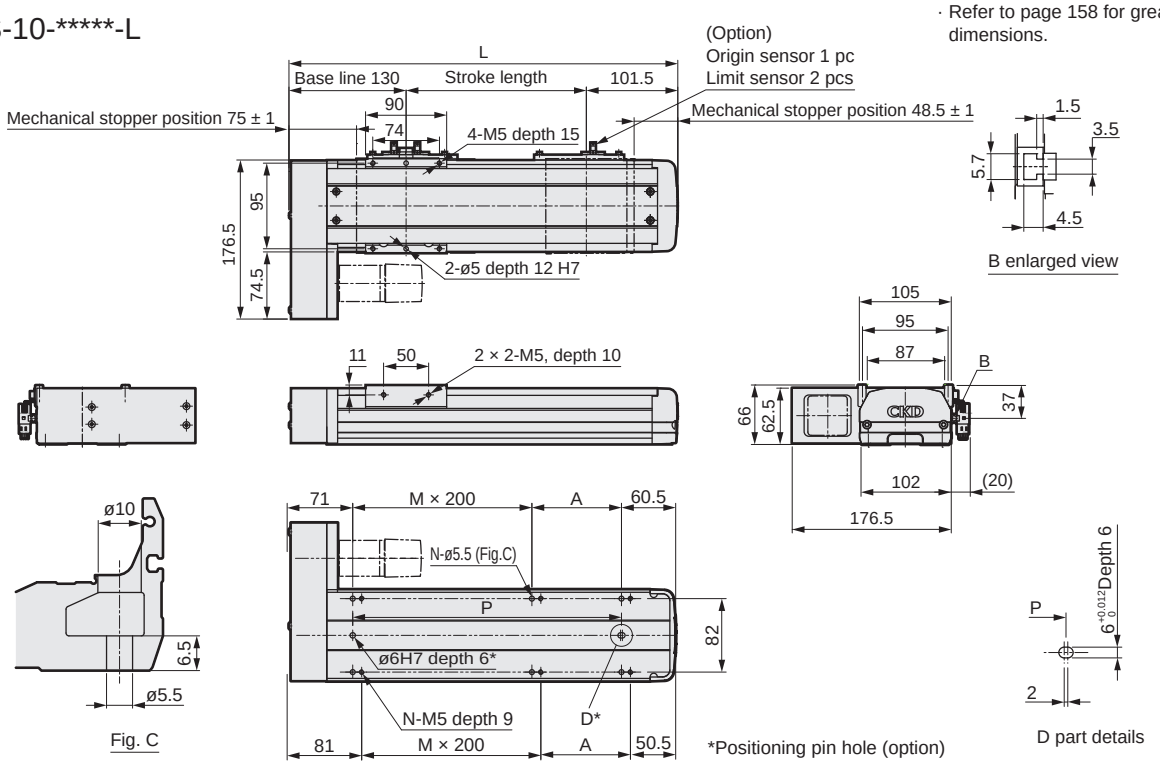

Stroke length (mm)	50	100	150	200	250	300	350	400	450	500	550	600	650	700	750	800	850	900	950	1000	1050
L	281.5	331.5	381.5	431.5	481.5	531.5	581.5	631.5	681.5	731.5	781.5	831.5	881.5	931.5	981.5	1031.5	1081.5	1131.5	1181.5	1231.5	1281.5
A	150	200	50	100	150	200	50	100	150	200	50	100	150	200	50	100	150	200	50	100	150
M	0	0	1	1	1	1	2	2	2	2	3	3	3	3	4	4	4	4	5	5	5
N	4	4	6	6	6	6	8	8	8	8	10	10	10	10	12	12	12	12	14	14	14
P	150	200	250	300	350	400	450	500	550	600	650	700	750	800	850	900	950	1000	1050	1100	1150
Weight (kg)	5.2	5.5	5.8	6.2	6.6	7.0	7.4	7.8	8.2	8.5	8.9	9.3	9.7	10.1	10.5	10.9	11.2	11.6	12.0	12.4	12.8

Motor mounting part

● ETS-10-100W

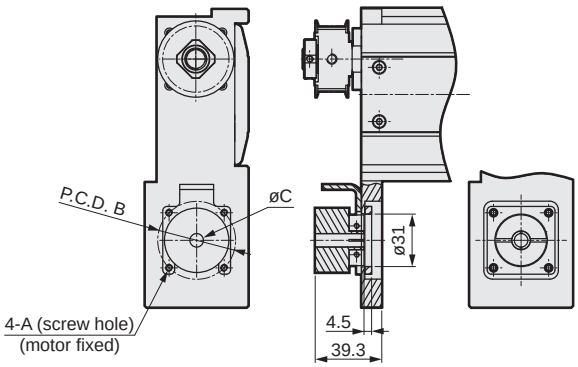

● ETS-10-200W

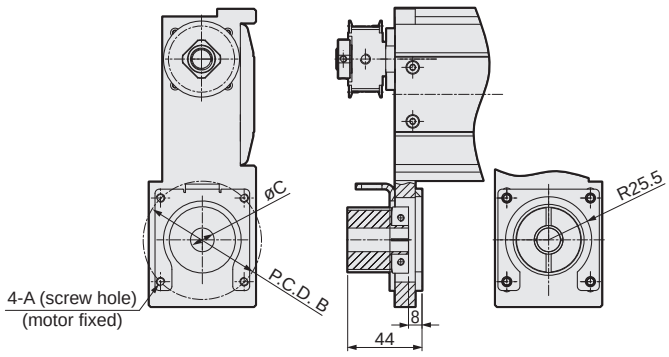

Mounted motor specification		A	B	C	Motor mounting bolt
M	100 W/200 W	M4/M5	ø46/ø70	ø8/ø14	4-M4 × L10/4-M5 × L25
Y	100 W/200 W	M4/M5	ø46/ø70	ø8/ø14	4-M4 × L10/4-M5 × L25
P	100 W/200 W	M3/M4	ø45/ø70	ø8/ø11	4-M3 × L10/4-M4 × L25
F	100 W/200 W	M4/M5	ø46/ø70	ø8/ø9	4-M4 × L10/4-M5 × L25

List of attachments

[Motor mounting parts]

Mounted motor specification	Timing belt, pulley	Motor capacity	Motor mounting bolt	
			Size	Quantity
M	Included at shipment	100 W/200 W	M4/M5	2/4
Y			M4/M5	2/4
P			M3/M4	4
F			M4/M5	2/4

[Origin sensor/Limit sensor]

Manufacturer	Model	Quantity
OMRON Corporation	EE-SX672	3

*Refer to page 156 for sensor specifications.



Electric actuator Ball screw drive Slider

ETS-12 Series

Straight motor mounting, built-in mounting

● Servo motor capacity: 100 W/200 W

How to order

ETS - 12 - 05 - 005 - E M 1 N N N N N - X

(A) (B) (C) (D) (E) (F) (G) (H) (I) (J) (K) (L)

(A) Body size

12	Body width 102 mm

(B) Screw lead

05	5 mm
10	10 mm
16	16 mm
20	20 mm

(C) Stroke length

005 to 105	50 mm (In 50 mm increments) 1050 mm

(D) Motor mounting direction *1 *2 *3

E	Straight mounting
B	Built-in mounting

(E) Mounted motor specification

M	Select the mounted motor specification from the table below.
Y	
P	
F	

(F) Motor capacity *1

1	100 W
2	200 W

(G) Brake *3

N	None
B	Yes

(H) Origin sensor (1 pc) *4 *5 *6

N	None
A	Inside motor side
B	Inside motor opposite side
C	Outside motor side
D	Outside motor opposite side

(I) Limit sensor (2 pcs) *4 *5 *6

N	None
A	Inside
B	Outside

(J) Grease nipple *6 *7

N	None (Body mounting direction: Standard)
R	Right
L	Left

(K) Positioning pin hole

N	None
P	Yes

(L) Metal stopper specifications (ETS-X) *1

	Standard
X	Yes

Manufacturer	100 W	200 W
Mitsubishi Electric Corporation	M	M
Delta Electronics Co., Ltd.	M	M
Sanyo Denki Co., Ltd.	M	M
YASKAWA Electric Corporation	Y	Y
Keyence Corporation	Y	Y
Panasonic Corporation	P	P
OMRON Corporation	M	P
Fuji Electric Co., Ltd.	M	M
FANUC CORPORATION	F	F
DENSO WAVE Incorporated (ETS-X only)	M	M
Bosch Rexroth AG	P	P
Rockwell Automation, Inc.	M	M
SIEMENS AG	M	M

*Refer to page 89 for the motor model No.

*1: The built-in mounting motor mounting direction cannot be selected for the 200 W motor capacity. Built-in mounting cannot be selected with metal stopper specifications either.
*2: Contact CKD when using an OMRON motor.
*3: "Yes" to the Brake can be selected only when the motor mounting direction is built-in mounting.
*4: Origin sensor and limit sensor are available as a set. As it is both-or-nothing, select "None" for both.
*5: For sensor inside mounting, the user cannot adjust the position. (Assembled at shipment) For sensor outside mounting, the user can adjust the position. (Included at shipment)
*6: Contact CKD to use the origin sensor, limit sensor and grease nipple in the same direction.
*7: "Body mounting direction: Standard" here indicates that either top or bottom mounting is possible.

Specifications

Applicable motor capacity		100 W/200 W servo motor			
Drive method		Ball screw ø16			
Ball screw accuracy grade		C7			
Stroke length	mm	50 to 1050			
Screw lead	mm	5	10	16	20
Max. load capacity *1	Horizontal kg	50	30	22	18
	Vertical kg	12	8	5	3
Max. speed	mm/s	250	500	800	1000
Rated thrust *1	100 W N	341	170	106	85
	200 W N	683	341	213	174
Repeatability	mm	±0.01			
Lost motion	mm	0.1 or less			
Dynamic allowable load	N	1660			
Static allowable moment	N·m	MP: 150, MY: 150, MR: 130			
Dynamic allowable moment	N·m	MP: 42.3, MY: 42.3, MR: 53.1			
Operating ambient temperature, humidity		0 to 40°C (no freezing) 35 to 80% RH (no condensation)			
Storage ambient temperature, humidity		-10 to 50°C (no freezing) 35 to 80% RH (no condensation)			
Atmosphere		No corrosive gas, explosive gas, or dust			

*1 Rated thrust and max. load capacity are guideline values assuming that the motor mounted will output the rated torque.

Stroke and max. speed

(mm/s)

Stroke length / Screw lead	100 to 750	800	850	900	950	1050
5	250	225	200	175	150	125
10	500	450	400	350	300	250
16	800	720	640	560	480	400
20	1000	900	800	700	600	500

*The max. speed is the speed when the motor mounted by the customer can output a rotation speed of 3000 rpm.

Allowable overhang length

*Refer to page 152 for details.

Moment direction

MP MY MR

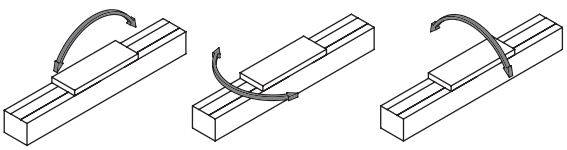

Dimensions Straight motor mounting

● ETS-12-*****-E

· Refer to page 158 for grease nipple dimensions.

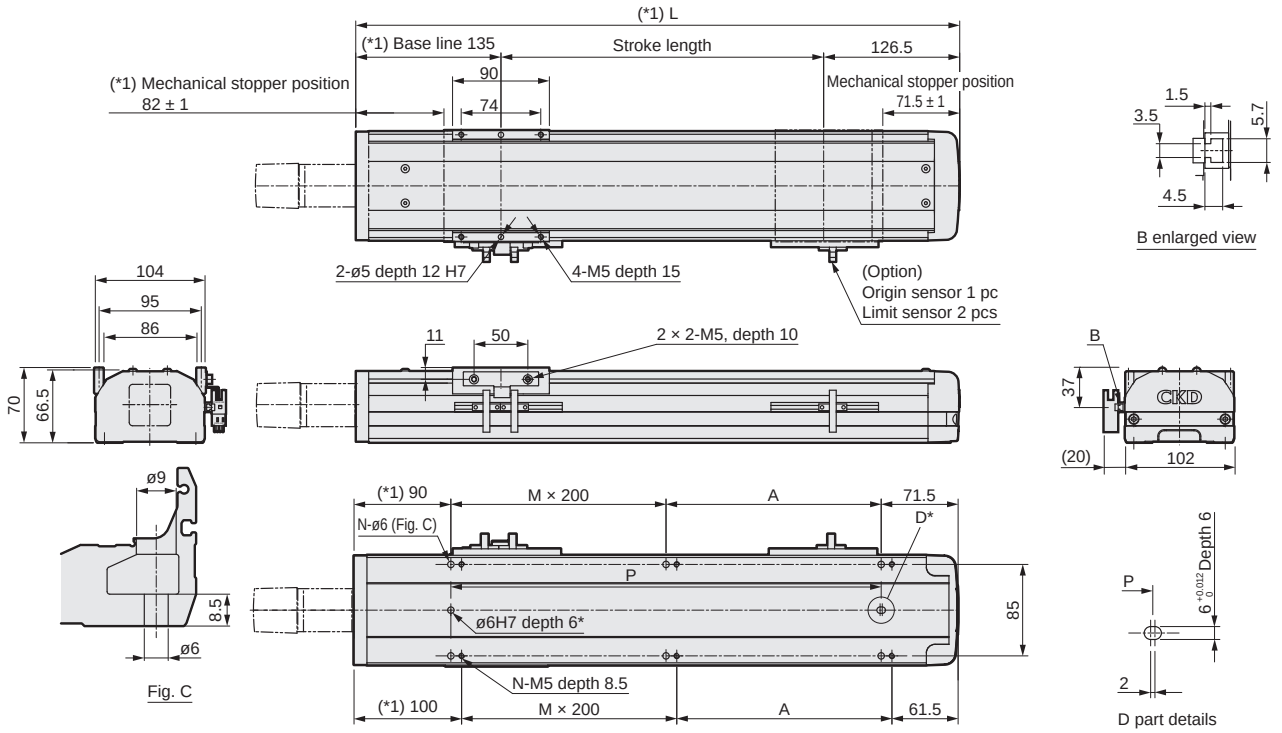

*Positioning pin hole (option)

Stroke length (mm)	50	100	150	200	250	300	350	400	450	500	550	600	650	700	750	800	850	900	950	1000	1050
L	311.5	361.5	411.5	461.5	511.5	561.5	611.5	661.5	711.5	761.5	811.5	861.5	911.5	961.5	1011.5	1061.5	1111.5	1161.5	1211.5	1261.5	1311.5
A	150	200	50	100	150	200	50	100	150	200	50	100	150	200	50	100	150	200	50	100	150
M	0	0	1	1	1	1	2	2	2	2	3	3	3	3	4	4	4	4	5	5	5
N	4	4	6	6	6	6	8	8	8	8	10	10	10	10	12	12	12	12	14	14	14
P	150	200	250	300	350	400	450	500	550	600	650	700	750	800	850	900	950	1000	1050	1100	1150
Weight (kg)	5.6	6.0	6.4	6.8	7.2	7.6	8.0	8.4	8.8	9.1	9.5	9.9	10.3	10.7	11.1	11.5	11.8	12.2	12.6	13.0	13.4

*1 The 200 W motor capacity is +5 mm.

Motor mounting part

● ETS-12-100W

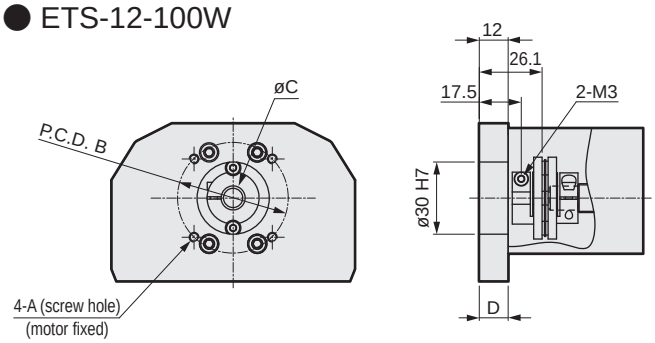

● ETS-12-200W

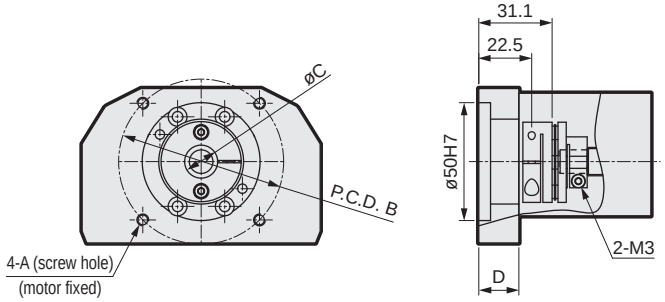

Mounted motor specification		A	B	C	D	Motor mounting bolt
M	100 W/200 W	M4/M5	ø46/ø70	ø8/ø14	12/17	4-M4 × L16/4-M5 × L18
Y	100 W/200 W	M4/M5	ø46/ø70	ø8/ø14	12/17	4-M4 × L16/4-M5 × L18
P	100 W/200 W	M3/M4	ø45/ø70	ø8/ø11	12/17	4-M3 × L16/4-M4 × L18
F	100 W/200 W	M4/M5	ø46/ø70	ø8/ø9	12/5	4-M4 × L16/4-M5 × L16

List of attachments

[Motor mounting parts]

Mounted motor specification	Coupling	Motor capacity	Motor mounting bolt	
			Size	Quantity
M	Assembled at shipment	100 W/200 W	M4/M5	2/4
Y			M4/M5	2/4
P			M3/M4	4
F			M4/M5	2/4

[Origin sensor/Limit sensor]

Manufacturer	Model	Quantity
OMRON Corporation	EE-SX672	3

*Refer to page 156 for sensor specifications.

Dimensions Motor built-in mounting

● ETS-12-*****-B

· Refer to page 158 for grease nipple dimensions.

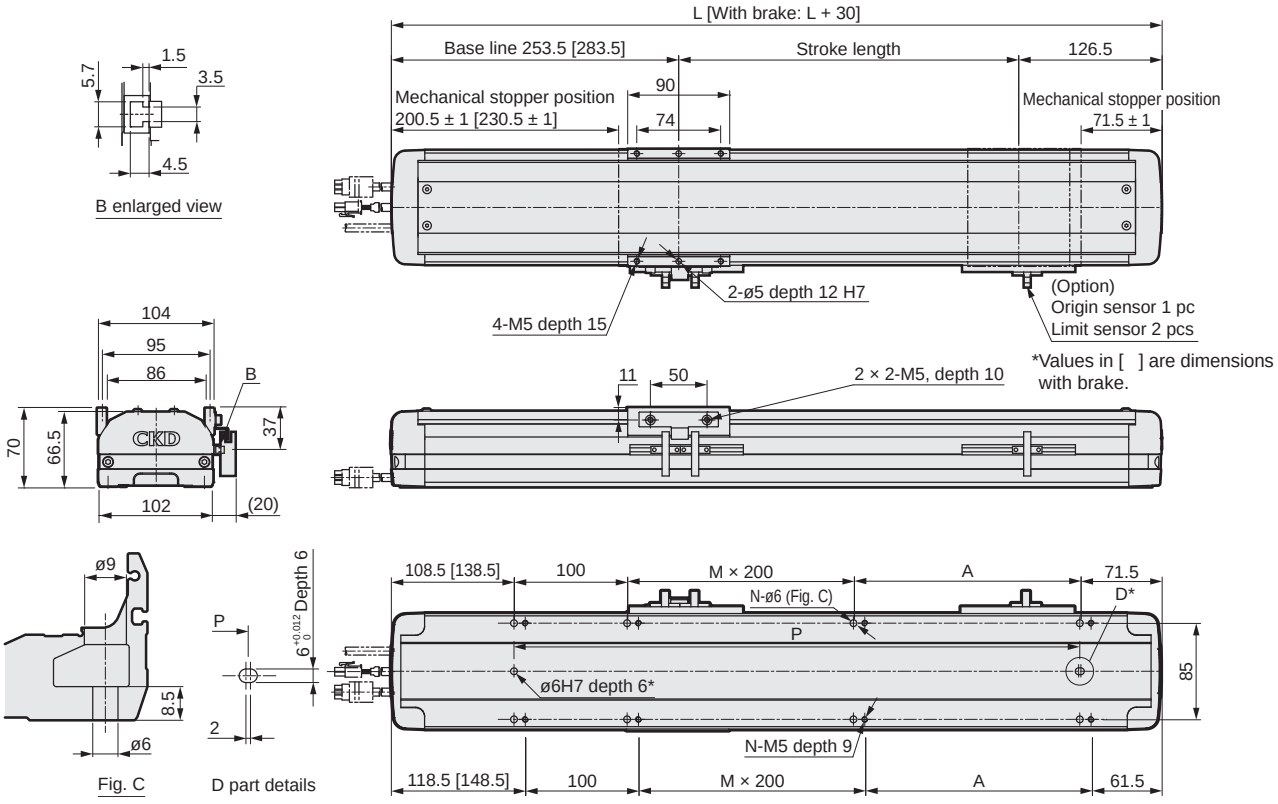

*Positioning pin hole (option)

Stroke length (mm)		50	100	150	200	250	300	350	400	450	500	550	600	650	700	750	800	850	900	950	1000	1050
L		430	480	530	580	630	680	730	780	830	880	930	980	1030	1080	1130	1180	1230	1280	1330	1380	1430
A		150	200	50	100	150	200	50	100	150	200	50	100	150	200	50	100	150	200	50	100	150
M		0	0	1	1	1	1	2	2	2	2	3	3	3	3	4	4	4	4	5	5	5
N		6	6	8	8	8	8	10	10	10	10	12	12	12	12	14	14	14	14	16	16	16
P		250	300	350	400	450	500	550	600	650	700	750	800	850	900	950	1000	1050	1100	1150	1200	1250
Weight (kg)	Without brake	7.1	8.0	8.9	9.7	10.5	11.4	12.2	13.0	13.9	14.7	15.5	16.4	17.2	18.0	18.9	19.7	20.6	21.4	22.2	23.1	23.9
	With brake	7.6	8.5	9.4	10.2	11.0	11.9	12.7	13.5	14.4	15.2	16.0	16.9	17.7	18.5	19.4	20.2	21.1	21.9	22.7	23.6	24.4

Motor mounting part

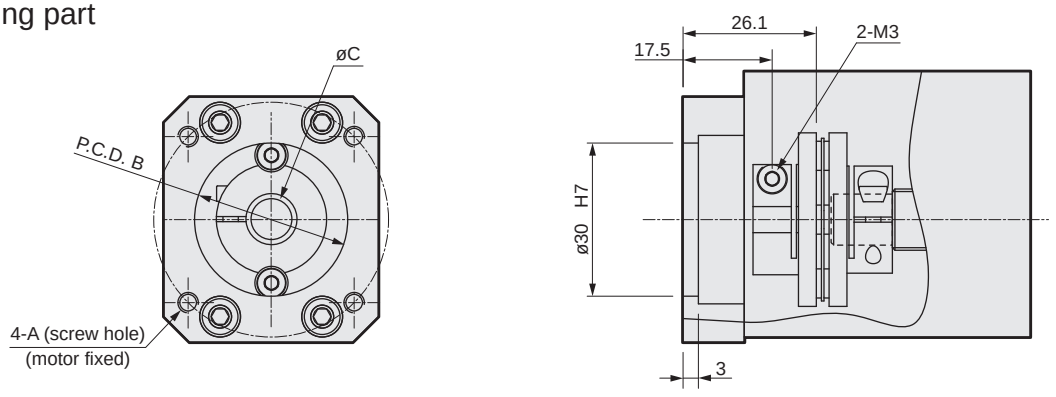

Mounted motor specification		A	B	C	Motor mounting bolt
M	100 W	M4	ø46	ø8	4-M4 × L16
Y	100 W	M4	ø46	ø8	4-M4 × L16
P	100 W	M3	ø45	ø8	4-M3 × L16

[Motor mounting parts]

Mounted motor specification	Coupling	Motor capacity	Motor mounting bolt	
			Size	Quantity
M	Assembled at shipment	100 W	M4	2
Y			M4	2
P			M3	4

[Origin sensor/Limit sensor]

Manufacturer	Model	Quantity
OMRON Corporation	EE-SX672	3

*Refer to page 156 for sensor specifications.

MEMO



Electric actuator Ball screw drive Slider

ETS-12 Series

Motor side mounting (left, right, bottom)

● Servo motor capacity: 100 W/200 W

How to order

ETS - 12 - 05 - 005 - R M 1 N N N L N - X

(A) (B) (C) (D) (E) (F) (G) (H) (I) (J) (K) (L)

(A) Body size

12	Body width 102 mm

(B) Screw lead

05	5 mm
10	10 mm
16	16 mm
20	20 mm

(C) Stroke length

005 to 105	50 mm (In 50 mm increments) 1050 mm

(D) Motor mounting direction *3*6

R	Right mounting
D	Bottom mounting
L	Left mounting

(E) Mounted motor specification

M	Select the mounted motor specification from the table below.
Y	
P	
F	

(F) Motor capacity

1	100 W
2	200 W

(G) Brake

N	None

(H) Origin sensor (1 pc) *1 *2 *3 *4

N	None
A	Inside motor side
B	Inside motor opposite side
C	Outside motor side
D	Outside motor opposite side

(I) Limit sensor (2 pcs) *1 *2 *3 *4

N	None
A	Inside
B	Outside

(J) Grease nipple *4 *5 *6

N	None (Body mounting direction: Standard)
R	Right
L	Left

(K) Positioning pin hole

N	None
P	Yes

(L) Metal stopper specifications (ETS-X)

	Standard
X	Yes

Manufacturer	100 W	200 W
Mitsubishi Electric Corporation	M	M
Delta Electronics Co., Ltd.	M	M
Sanyo Denki Co., Ltd.	M	M
YASKAWA Electric Corporation	Y	Y
Keyence Corporation	Y	Y
Panasonic Corporation	P	P
OMRON Corporation	M	P
Fuji Electric Co., Ltd.	M	M
FANUC CORPORATION	F	F
DENSO WAVE Incorporated (ETS-X only)	M	M
Bosch Rexroth AG	P	P
Rockwell Automation, Inc.	M	M
SIEMENS AG	M	M

*Refer to page 89 for the motor model No.

*1: Origin sensor and limit sensor are available as a set. As it is both-or-nothing, select "None" for both.
*2: For sensor inside mounting, the user cannot adjust the position. (Assembled at shipment)
For sensor outside mounting, the user can adjust the position. (Included at shipment)
*3: When the motor mounting direction is R or L, origin sensor A and limit sensor A cannot be combined.
*4: Contact CKD to use the origin sensor, limit sensor and grease nipple in the same direction.
*5: "Body mounting direction: Standard" here indicates that either top or bottom mounting is possible.
*6: When selecting motor mounting direction R, grease nipple R cannot be selected.
When selecting L, grease nipple L cannot be selected.

Specifications

Applicable motor capacity		100 W/200 W servo motor			
Drive method		Ball screw ø16			
Ball screw accuracy grade		C7			
Stroke length	mm	50 to 1050			
Screw lead	mm	5	10	16	20
Max. load capacity *1	Horizontal kg	50	30	22	18
	Vertical kg	12	8	5	3
Max. speed *2	mm/s	250	500	800	1000
Rated thrust *1	100 W N	341	170	106	85
	200 W N	683	341	213	174
Repeatability	mm	±0.01			
Lost motion	mm	0.1 or less			
Dynamic allowable load	N	1660			
Static allowable moment	N·m	MP: 150, MY: 150, MR: 130			
Dynamic allowable moment	N·m	MP: 42.3, MY: 42.3, MR: 53.1			
Operating ambient temperature, humidity		0 to 40°C (no freezing) 35 to 80% RH (no condensation)			
Storage ambient temperature, humidity		-10 to 50°C (no freezing) 35 to 80% RH (no condensation)			
Atmosphere		No corrosive gas, explosive gas, or dust			

*1 Rated thrust and max. load capacity are guideline values assuming that the motor mounted will output the rated torque.

Stroke and max. speed

(mm/s)

Stroke length / Screw lead	100 to 750	800	850	900	950	1050
5	250	225	200	175	150	125
10	500	450	400	350	300	250
16	800	720	640	560	480	400
20	1000	900	800	700	600	500

*The max. speed is the speed when the motor mounted by the customer can output a rotation speed of 3000 rpm.

Allowable overhang length

*Refer to page 152 for details.

Moment direction

MP MY MR

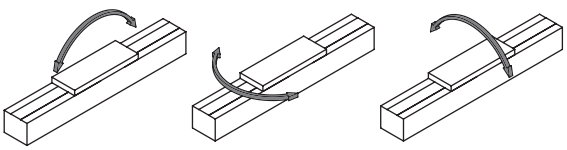

Dimensions Motor right-side mounting

● ETS-12-*****-R

· Refer to page 158 for grease nipple dimensions.

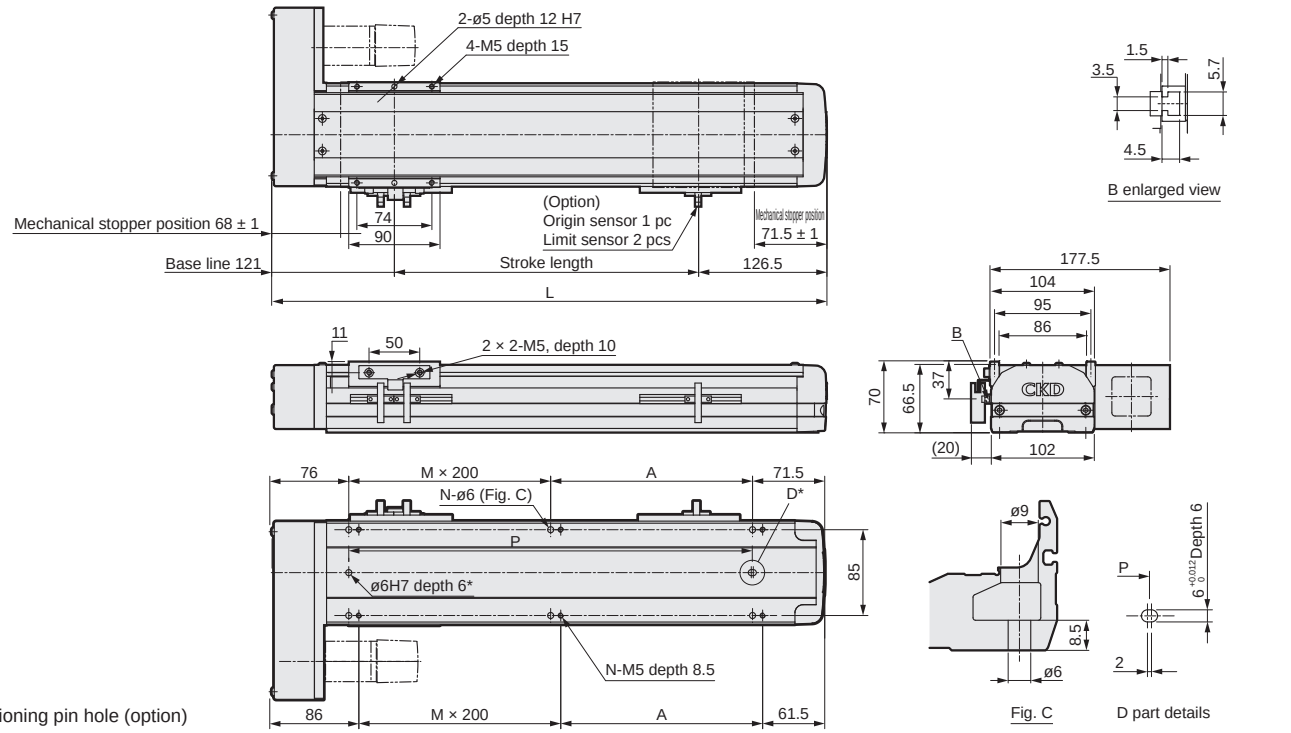

*Positioning pin hole (option)

Stroke length (mm)	50	100	150	200	250	300	350	400	450	500	550	600	650	700	750	800	850	900	950	1000	1050
L	297.5	347.5	397.5	447.5	497.5	547.5	597.5	647.5	697.5	747.5	797.5	847.5	897.5	947.5	997.5	1047.5	1097.5	1147.5	1197.5	1247.5	1297.5
A	150	200	50	100	150	200	50	100	150	200	50	100	150	200	50	100	150	200	50	100	150
M	0	0	1	1	1	1	2	2	2	2	3	3	3	3	4	4	4	4	5	5	5
N	4	4	6	6	6	6	8	8	8	8	10	10	10	10	12	12	12	12	14	14	14
P	150	200	250	300	350	400	450	500	550	600	650	700	750	800	850	900	950	1000	1050	1100	1150
Weight (kg)	6.2	6.6	7.0	7.4	7.8	8.2	8.6	9.0	9.4	9.7	10.1	10.5	10.9	11.3	11.7	12.1	12.4	12.8	13.2	13.6	14.0

Motor mounting part

● ETS-12-100W

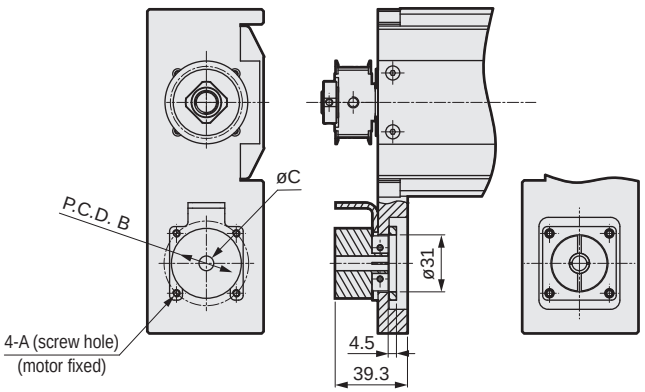

● ETS-12-200W

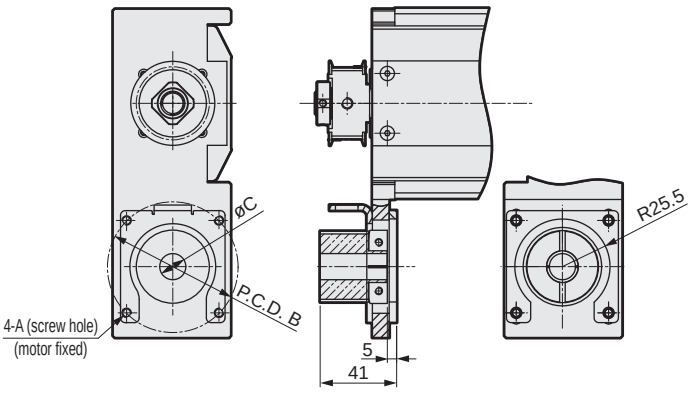

Mounted motor specification		A	B	C	Motor mounting bolt
M	100 W/200 W	M4/M5	ø46/ø70	ø8/ø14	4-M4 × L16/4-M5 × L25
Y	100 W/200 W	M4/M5	ø46/ø70	ø8/ø14	4-M4 × L16/4-M5 × L25
P	100 W/200 W	M3/M4	ø45/ø70	ø8/ø11	4-M3 × L16/4-M4 × L25
F	100 W/200 W	M4/M5	ø46/ø70	ø8/ø9	4-M4 × L16/4-M5 × L20

List of attachments

[Motor mounting parts]

Mounted motor specification	Timing belt, pulley	Motor capacity	Motor mounting bolt	
			Size	Quantity
M	Included at shipment	100 W/200 W	M4/M5	2/4
Y			M4/M5	2/4
P			M3/M4	4
F			M4/M5	2/4

[Origin sensor/Limit sensor]

Manufacturer	Model	Quantity
OMRON Corporation	EE-SX672	3

*Refer to page 156 for sensor specifications.

Dimensions Motor bottom mounting

● ETS-12-*****-D

· Refer to page 158 for grease nipple dimensions.

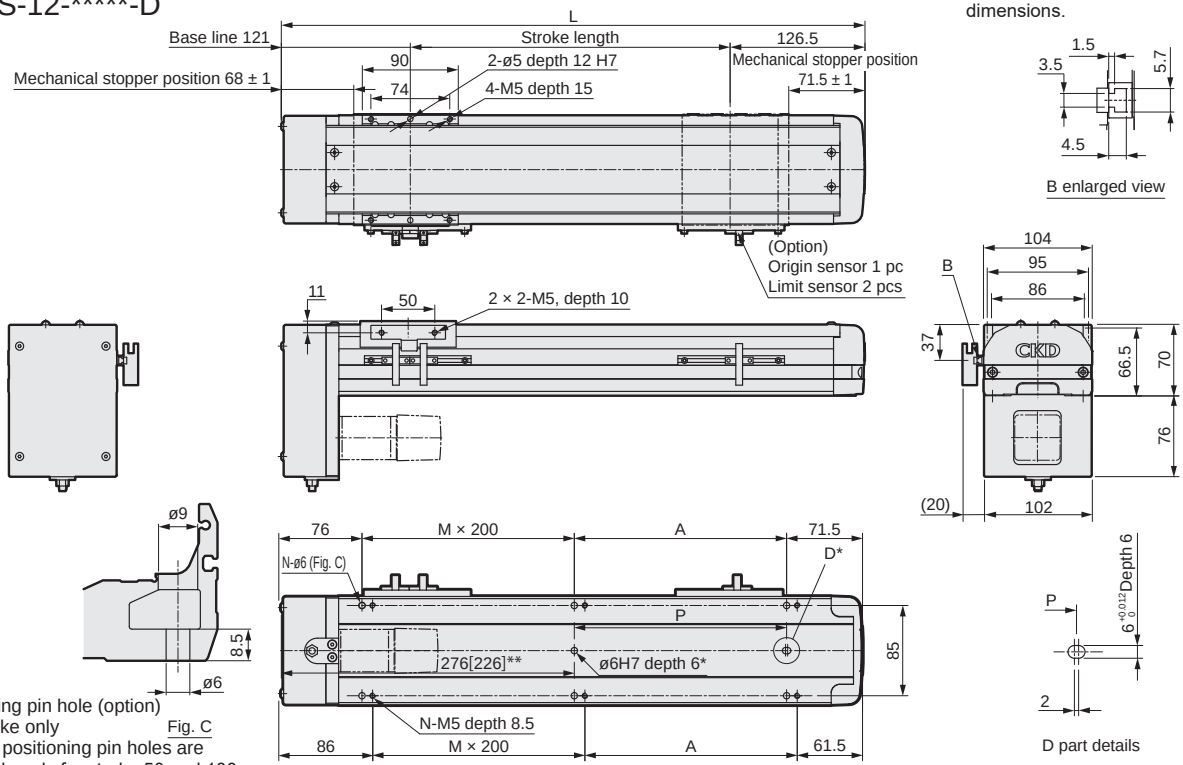

*Positioning pin hole (option)
** 50 stroke only
Round positioning pin holes are available only for stroke 50 and 100.
Fig. C

Stroke length (mm)	50	100	150	200	250	300	350	400	450	500	550	600	650	700	750	800	850	900	950	1000	1050
L	297.5	347.5	397.5	447.5	497.5	547.5	597.5	647.5	697.5	747.5	797.5	847.5	897.5	947.5	997.5	1047.5	1097.5	1147.5	1197.5	1247.5	1297.5
A	150	200	50	100	150	200	50	100	150	200	50	100	150	200	50	100	150	200	50	100	150
M	0	0	1	1	1	1	2	2	2	2	3	3	3	3	4	4	4	4	5	5	5
N	4	4	6	6	6	6	8	8	8	8	10	10	10	10	12	12	12	12	14	14	14
P	0	0	50	100	150	200	250	300	350	400	450	500	550	600	650	700	750	800	850	900	950
Weight (kg)	6.4	6.8	7.2	7.6	7.8	8.2	8.8	9.2	9.6	9.9	10.3	10.7	11.1	11.5	11.9	12.3	12.6	13.0	13.4	13.8	14.2

Motor mounting part

● ETS-12-100W

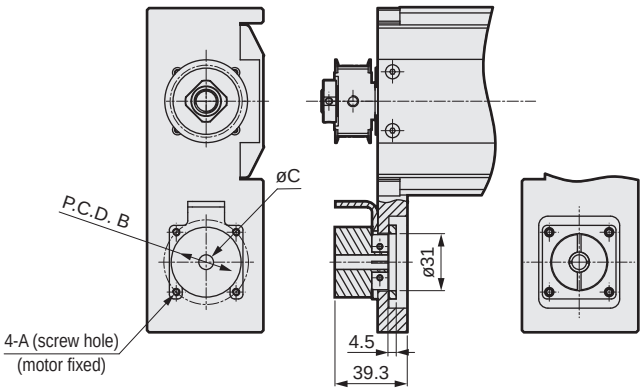

● ETS-12-200W

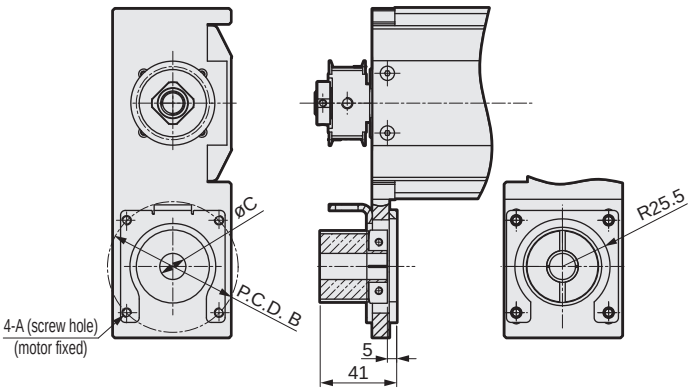

Mounted motor specification		A	B	C	Motor mounting bolt
M	100 W/200 W	M4/M5	ø46/ø70	ø8/ø14	4-M4 × L16/4-M5 × L25
Y	100 W/200 W	M4/M5	ø46/ø70	ø8/ø14	4-M4 × L16/4-M5 × L25
P	100 W/200 W	M3/M4	ø45/ø70	ø8/ø11	4-M3 × L16/4-M4 × L25
F	100 W/200 W	M4/M5	ø46/ø70	ø8/ø9	4-M4 × L16/4-M5 × L20

List of attachments

[Motor mounting parts]

Mounted motor specification	Timing belt, pulley	Motor capacity	Motor mounting bolt	
			Size	Quantity
M	Included at shipment	100 W/200 W	M4/M5	2/4
Y			M4/M5	2/4
P			M3/M4	4
F			M4/M5	2/4

[Origin sensor/Limit sensor]

Manufacturer	Model	Quantity
OMRON Corporation	EE-SX672	3

*Refer to page 156 for sensor specifications.

Dimensions Motor left-side mounting

● ETS-12-*****-L

· Refer to page 158 for grease nipple dimensions.

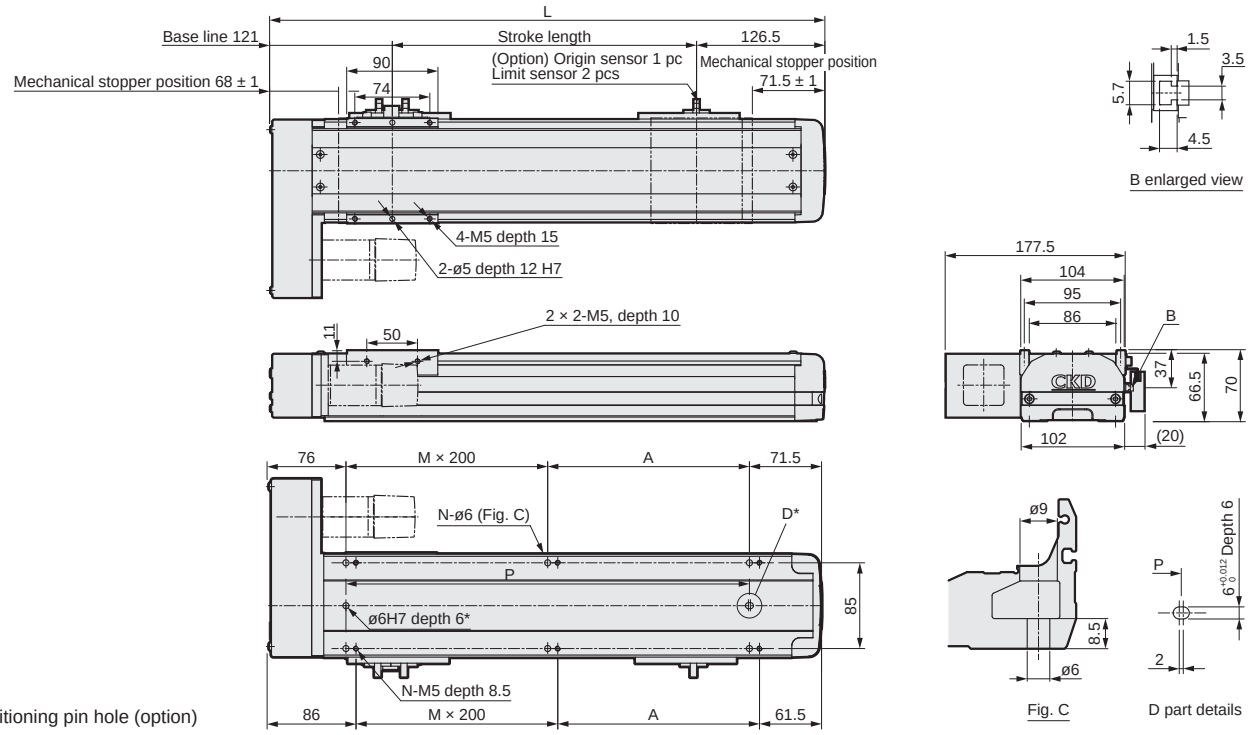

*Positioning pin hole (option)

Stroke length (mm)	50	100	150	200	250	300	350	400	450	500	550	600	650	700	750	800	850	900	950	1000	1050
L	297.5	347.5	397.5	447.5	497.5	547.5	597.5	647.5	697.5	747.5	797.5	847.5	897.5	947.5	997.5	1047.5	1097.5	1147.5	1197.5	1247.5	1297.5
A	150	200	50	100	150	200	50	100	150	200	50	100	150	200	50	100	150	200	50	100	150
M	0	0	1	1	1	1	2	2	2	2	3	3	3	3	4	4	4	4	5	5	5
N	4	4	6	6	6	6	8	8	8	8	10	10	10	10	12	12	12	12	14	14	14
P	150	200	250	300	350	400	450	500	550	600	650	700	750	800	850	900	950	1000	1050	1100	1150
Weight (kg)	6.2	6.6	7.0	7.4	7.8	8.2	8.6	9.0	9.4	9.7	10.1	10.5	10.9	11.3	11.7	12.1	12.4	12.8	13.2	13.6	14.0

Motor mounting part

● ETS-12-100W

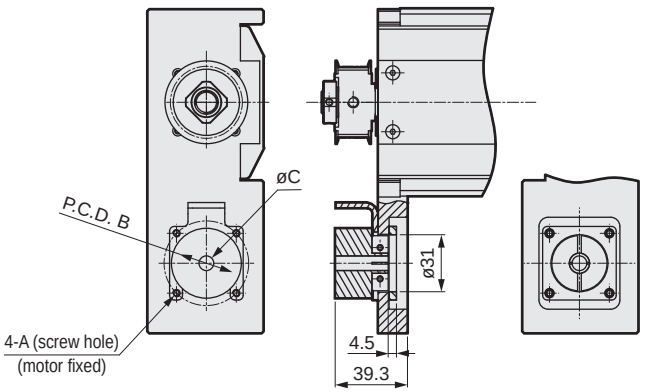

● ETS-12-200W

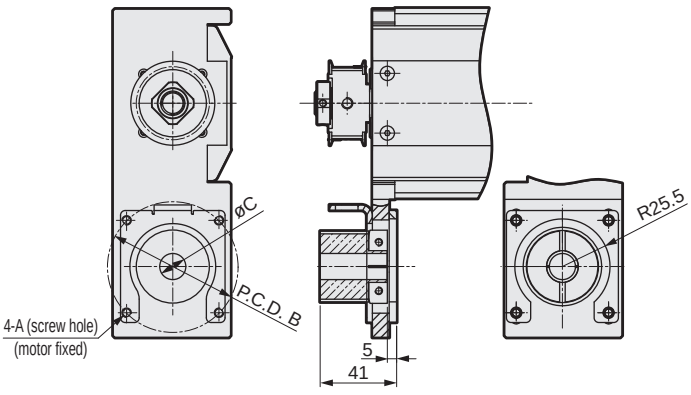

Mounted motor specification		A	B	C	Motor mounting bolt
M	100 W/200 W	M4/M5	ø46/ø70	ø8/ø14	4-M4 × L16/4-M5 × L25
Y	100 W/200 W	M4/M5	ø46/ø70	ø8/ø14	4-M4 × L16/4-M5 × L25
P	100 W/200 W	M3/M4	ø45/ø70	ø8/ø11	4-M3 × L16/4-M4 × L25
F	100 W/200 W	M4/M5	ø46/ø70	ø8/ø9	4-M4 × L16/4-M5 × L20

List of attachments

[Motor mounting parts]

Mounted motor specification	Timing belt, pulley	Motor capacity	Motor mounting bolt	
			Size	Quantity
M	Included at shipment	100 W/200 W	M4/M5	2/4
Y			M4/M5	2/4
P			M3/M4	4
F			M4/M5	2/4

[Origin sensor/Limit sensor]

Manufacturer	Model	Quantity
OMRON Corporation	EE-SX672	3

*Refer to page 156 for sensor specifications.



Electric actuator Ball screw drive Slider

ETS-13 Series

Straight motor mounting, built-in mounting

- Servo motor capacity: 100 W (metal stopper specifications)/200 W/ 400 W

How to order

ETS - 13 - 05 005 - E M 1 N N N N N X

(A) (B) (C) (D) (E) (F) (G) (H) (I) (J) (K) (L)

(A) Body size

13	Body width 135 mm

(B) Screw lead

05	5 mm
10	10 mm
16	16 mm
20	20 mm

(C) Stroke length

005 to 105	50 mm (In 50 mm increments) 1050 mm

(D) Motor mounting direction *1 *3

E	Straight mounting
B	Built-in mounting

(E) Mounted motor specification

M	Select the mounted motor specification from the table below.
Y	
P	
F	

Manufacturer	100 W	200 W	400 W
Mitsubishi Electric Corporation	M	M	M
Delta Electronics Co., Ltd.	M	M	M
Sanyo Denki Co., Ltd.	M	M	M
YASKAWA Electric Corporation	Y	Y	Y
Keyence Corporation	Y	Y	Y
Panasonic Corporation	P	P	P
OMRON Corporation	M	P	P
Fuji Electric Co., Ltd.	M	M	M
FANUC CORPORATION	F	F	F
DENSO WAVE Incorporated (ETS-X only)	M	M	M
Bosch Rexroth AG	P	P	P
Rockwell Automation, Inc.	M	M	M
SIEMENS AG	M	M	M

*100 W supports only metal stopper specifications.
*Refer to page 89 for the motor model No.

(F) Motor capacity *2

1	100 W
2	200 W
4	400 W

(G) Brake *3

N	None
B	Yes

(H) Origin sensor (1 pc) *4 *5 *6

N	None
A	Inside motor side
B	Inside motor opposite side
C	Outside motor side
D	Outside motor opposite side

(I) Limit sensor (2 pcs) *4 *5 *6

N	None
A	Inside
B	Outside

(J) Grease nipple *6 *7

N	None (Body mounting direction: Standard)
R	Right
L	Left

(K) Positioning pin hole

N	None
P	Yes

(L) Metal stopper specifications (ETS-X) *1 *2

	Standard
X	Yes

*1: Built-in mounting cannot be selected with metal stopper specifications.
*2: 100 W can be selected only when selecting metal stopper specifications.
*3: "Yes" to the Brake can be selected only when the motor mounting direction is built-in mounting.
*4: Origin sensor and limit sensor are available as a set. As it is both-or-nothing, select "None" for both.
*5: For sensor inside mounting, the user cannot adjust the position. (Assembled at shipment)
For sensor outside mounting, the user can adjust the position. (Included at shipment)
*6: Contact CKD to use the origin sensor, limit sensor and grease nipple in the same direction.
*7: "Body mounting direction: Standard" here indicates that either top or bottom mounting is possible.

Specifications

Applicable motor capacity *1			100 W/200 W/400 W servo motor			
Drive method			Ball screw ø16			
Ball screw accuracy grade			C7			
Stroke length		mm	50 to 1050			
Screw lead		mm	5	10	16	20
Max. load capacity *1 *2	Horizontal kg	100 W	50	30	22	18
		200 W	70	47	30	24
		400 W	70	47	30	24
	Vertical kg	100 W	12	8	5	3
		200 W	17	12	6	4
		400 W	17	12	6	4
Max. speed		mm/s	250	500	800	1000
Rated thrust *1 *2	100 W	N	341	170	106	85
	200 W	N	683	341	213	174
	400 W	N	1388	694	433	347
Repeatability		mm	±0.01			
Lost motion		mm	0.1 or less			
Dynamic allowable load		N	4822			
Static allowable moment		N·m	MP: 175, MY: 174, MR: 153			
Dynamic allowable moment		N·m	MP: 45.1, MY: 45.1, MR: 191.7			
Operating ambient temperature, humidity			0 to 40°C (no freezing) 35 to 80% RH (no condensation)			
Storage ambient temperature, humidity			-10 to 50°C (no freezing) 35 to 80% RH (no condensation)			
Atmosphere			No corrosive gas, explosive gas, or dust			

*1 100 W can be selected only with metal stopper (ETS-X) specifications.
*2 Rated thrust and max. load capacity are guideline values assuming that the motor mounted will output the rated torque.

Stroke and max. speed

(mm/s)

Stroke length / Screw lead	100 to 750	800	850	900	950	1050
5	250	225	200	175	150	125
10	500	450	400	350	300	250
16	800	720	640	560	480	400
20	1000	900	800	700	600	500

*The max. speed is the speed when the motor mounted by the customer can output a rotation speed of 3000 rpm.

Allowable overhang length

*Refer to page 152 for details.

Moment direction

MP MY MR

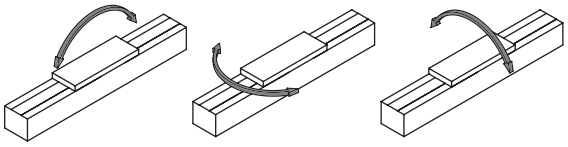

Dimensions Straight motor mounting

● ETS-13-*****-E

· Refer to page 158 for grease nipple dimensions.

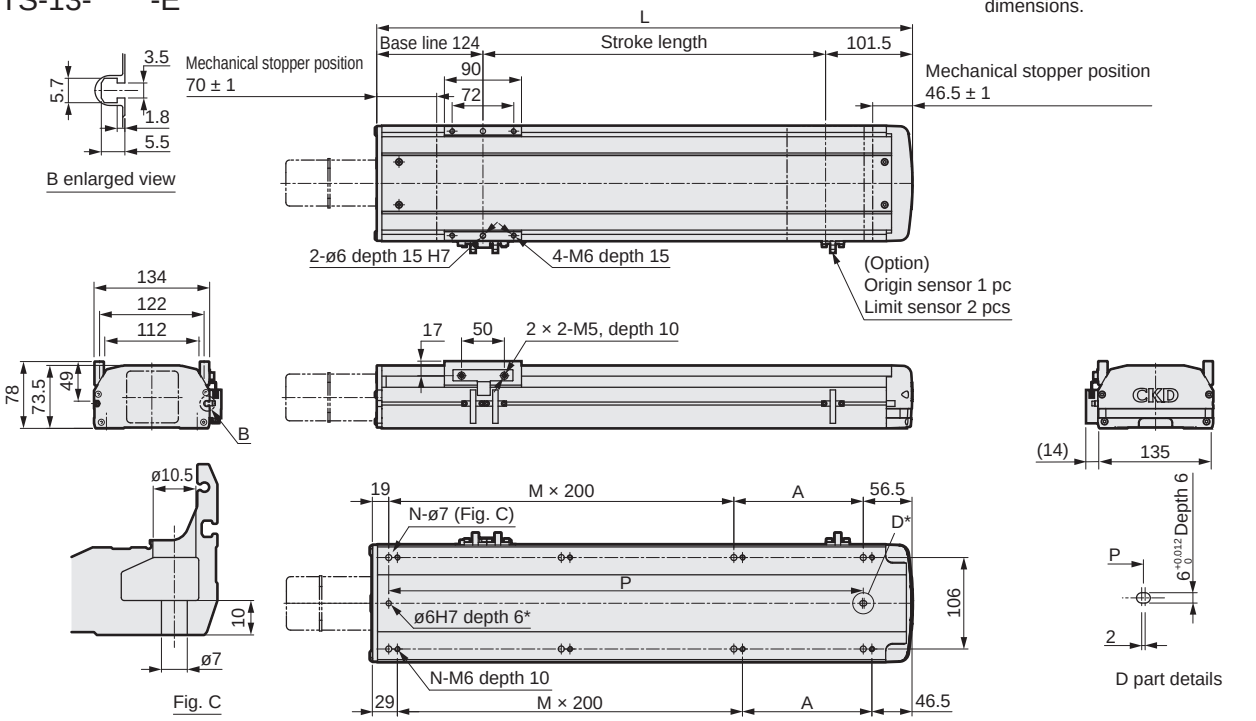

*Positioning pin hole (option)

Stroke length (mm)	50	100	150	200	250	300	350	400	450	500	550	600	650	700	750	800	850	900	950	1000	1050
L	275.5	325.5	375.5	425.5	475.5	525.5	575.5	625.5	675.5	725.5	775.5	825.5	875.5	925.5	975.5	1025.5	1075.5	1125.5	1175.5	1225.5	1275.5
A	200	50	100	150	200	50	100	150	200	50	100	150	200	50	100	150	200	50	100	150	200
M	0	1	1	1	1	2	2	2	2	3	3	3	3	4	4	4	4	5	5	5	5
N	4	6	6	6	6	8	8	8	8	10	10	10	10	12	12	12	12	14	14	14	14
P	200	250	300	350	400	450	500	550	600	650	700	750	800	850	900	950	1000	1050	1100	1150	1200
Weight (kg)	5.9	6.5	6.9	7.4	7.9	8.4	8.9	9.3	9.9	10.3	10.9	11.3	11.8	12.3	12.8	13.3	13.8	14.3	14.8	15.2	15.8

Motor mounting part

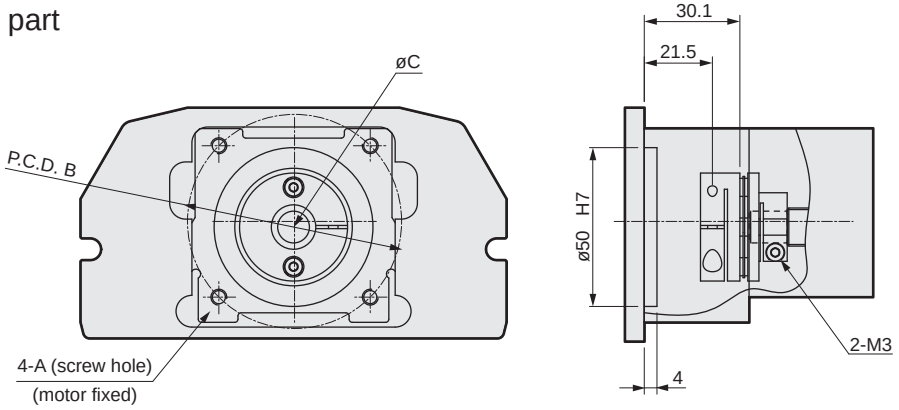

Mounted motor specification		A	B	C	Motor mounting bolt
M	100 W/200 W/400 W	M4/M5/M5	ø46/ø70/ø70	ø8/ø14/ø14	4-M5 × L18/4-M5 × L20
Y	100 W/200 W/400 W	M4/M5/M5	ø46/ø70/ø70	ø8/ø14/ø14	4-M5 × L18/4-M5 × L20
P	100 W/200 W/400 W	M3/M4/M4	ø45/ø70/ø70	ø8/ø11/ø14	4-M4 × L18/4-M4 × L20
F	100 W/200 W/400 W	M4/M5/M5	ø46/ø70/ø70	ø8/ø9/ø14	4-M5 × L18/4-M5 × L20 4-M5 × L20

*100 W supports only metal stopper specifications.

List of attachments

[Motor mounting parts]

Mounted motor specification	Coupling	Motor capacity	Motor mounting bolt	
			Size	Quantity
M	Assembled at shipment	100 W/ 200 W/ 400 W	M4/M5/M5	2/4/4
Y			M4/M5/M5	2/4/4
P			M3/M4/M4	4/4/4
F			M4/M5/M5	2/4/4

*100 W supports only metal stopper specifications.

[Origin sensor/Limit sensor]

Manufacturer	Model	Quantity
OMRON Corporation	EE-SX672	3

*Refer to page 156 for sensor specifications.

Dimensions Motor built-in mounting

● ETS-13-*****-B

· Refer to page 158 for grease nipple dimensions.

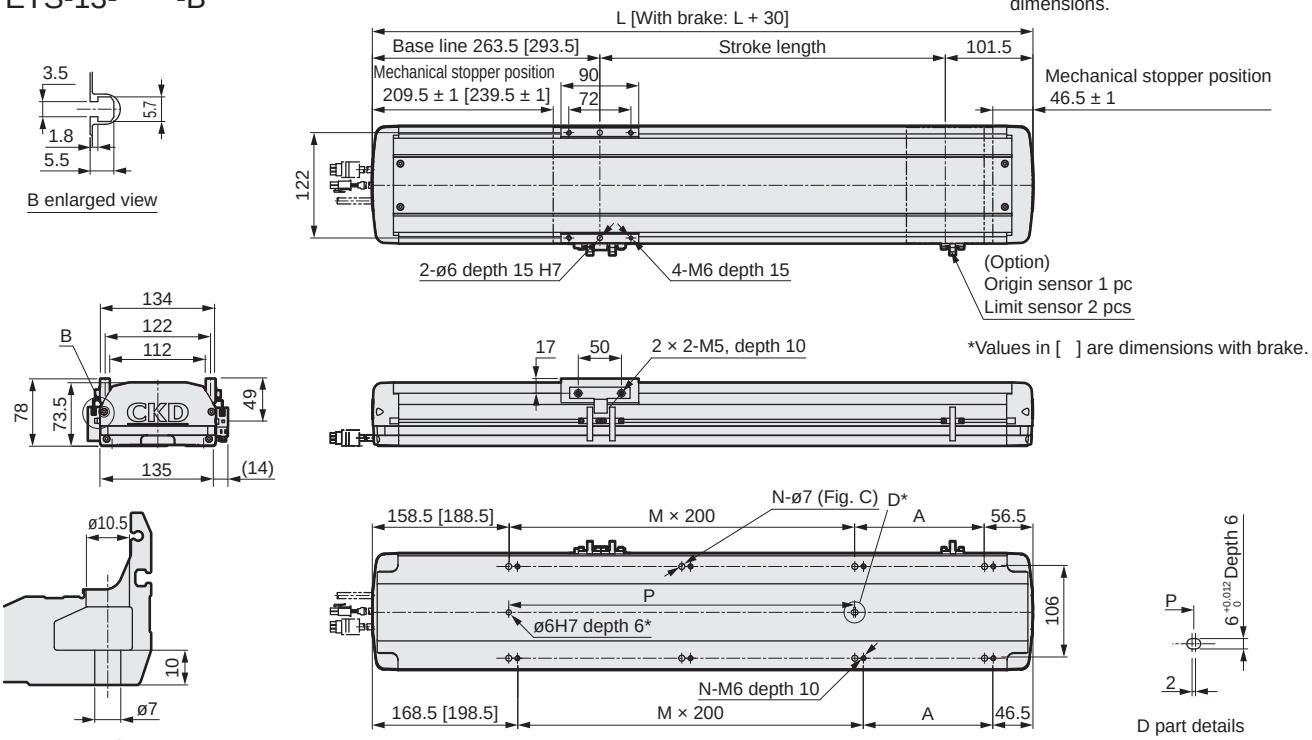

Stroke length (mm)		50	100	150	200	250	300	350	400	450	500	550	600	650	700	750	800	850	900	950	1000	1050
L		415	465	515	565	615	665	715	765	815	865	915	965	1015	1065	1115	1165	1215	1265	1315	1365	1415
A		200	50	100	150	200	50	100	150	200	50	100	150	200	50	100	150	200	50	100	150	200
M		0	1	1	1	1	2	2	2	2	3	3	3	3	4	4	4	4	5	5	5	5
N		4	6	6	6	6	8	8	8	8	10	10	10	10	12	12	12	12	14	14	14	14
P		200	250	300	350	400	450	500	550	600	650	700	750	800	850	900	950	1000	1050	1100	1150	1200
Weight (kg)	Without brake	8.2	9.2	10.2	11.2	12.2	13.2	14.2	15.2	16.2	17.2	18.2	19.2	20.1	21.1	22.1	23.1	24.1	25.1	26.1	27.1	28.1
	With brake	8.8	9.8	10.8	11.8	12.8	13.8	14.8	15.8	16.8	17.8	18.8	19.7	20.7	21.7	22.7	23.7	24.7	25.7	26.7	27.7	28.7

Motor mounting part

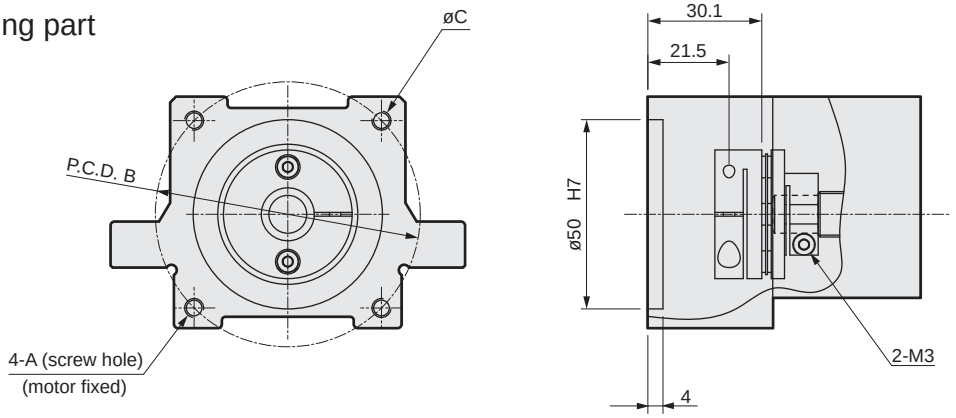

Mounted motor specification		A	B	C	Motor mounting bolt
M	100 W/200 W/400 W	M4/M5/M5	ø46/ø70/ø70	ø8/ø14/ø14	4-M5 × L18/4-M5 × L20
Y	100 W/200 W/400 W	M4/M5/M5	ø46/ø70/ø70	ø8/ø14/ø14	4-M5 × L18/4-M5 × L20
P	100 W/200 W/400 W	M3/M4/M4	ø45/ø70/ø70	ø8/ø11/ø14	4-M4 × L18/4-M4 × L20

*100 W supports only metal stopper specifications.

List of attachments

[Motor mounting parts]

Mounted motor specification	Coupling	Motor capacity	Motor mounting bolt	
			Size	Quantity
M	Assembled at shipment	100 W/ 200 W/ 400 W	M4/M5/M5	2/4/4
Y			M4/M5/M5	2/4/4
P			M3/M4/M4	4/4/4

[Origin sensor/Limit sensor]

Manufacturer	Model	Quantity
OMRON Corporation	EE-SX672	3

*Refer to page 156 for sensor specifications.

MEMO



Electric actuator Ball screw drive Slider

ETS-13 Series

Motor side mounting (left, right, bottom)

● Servo motor capacity: 100 W (metal stopper specifications)/200 W/ 400 W

How to order

ETS - 13 - 05 005 - R M 1 N N N N N X

(A) (B) (C) (D) (E) (F) (G) (H) (I) (J) (K) (L)

(A) Body size

13	Body width 135 mm

(B) Screw lead

05	5 mm
10	10 mm
16	16 mm
20	20 mm

(C) Stroke length

005 to 105	50 mm (In 50 mm increments) 1050 mm

(D) Motor mounting direction *6

R	Right mounting
D	Bottom mounting
L	Left mounting

(E) Mounted motor specification

M	Select the mounted motor specification from the table below.
Y	
P	
F	

(F) Motor capacity *1

1	100 W
2	200 W
4	400 W

(G) Brake

N	None

(H) Origin sensor (1 pc) *2 *3 *4

N	None
A	Inside motor side
B	Inside motor opposite side
C	Outside motor side
D	Outside motor opposite side

(I) Limit sensor (2 pcs) *2 *3 *4

N	None
A	Inside
B	Outside

(J) Grease nipple *4 *5 *6

N	None (Body mounting direction: Standard)
R	Right
L	Left

(K) Positioning pin hole

N	None
P	Yes

(L) Metal stopper specifications (ETS-X) *1

	Standard
X	Yes

Manufacturer	100 W	200 W	400 W
Mitsubishi Electric Corporation	M	M	M
Delta Electronics Co., Ltd.	M	M	M
Sanyo Denki Co., Ltd.	M	M	M
YASKAWA Electric Corporation	Y	Y	Y
Keyence Corporation	Y	Y	Y
Panasonic Corporation	P	P	P
OMRON Corporation	M	P	P
Fuji Electric Co., Ltd.	M	M	M
FANUC CORPORATION	F	F	F
DENSO WAVE Incorporated (ETS-X only)	M	M	M
Bosch Rexroth AG	P	P	P
Rockwell Automation, Inc.	M	M	M
SIEMENS AG	M	M	M

*Refer to page 89 for the motor model No.

*1: 100 W can be selected only when selecting metal stopper specifications.
*2: Origin sensor and limit sensor are available as a set. As it is both-or-nothing, select "None" for both.
*3: For sensor inside mounting, the user cannot adjust the position. (Assembled at shipment)
For sensor outside mounting, the user can adjust the position. (Included at shipment)
*4: Contact CKD to use the origin sensor, limit sensor and grease nipple in the same direction.
*5: "Body mounting direction: Standard" here indicates that either top or bottom mounting is possible.
*6: When selecting motor mounting direction R, grease nipple R cannot be selected.
When selecting L, grease nipple L cannot be selected.

Specifications

Applicable motor capacity *1			100 W/200 W/400 W servo motor			
Drive method			Ball screw ø16			
Ball screw accuracy grade			C7			
Stroke length		mm	50 to 1050			
Screw lead		mm	5	10	16	20
Max. load capacity *1 *2	Horizontal kg	100 W	50	30	22	18
		200 W	70	47	30	24
		400 W	70	47	30	24
	Vertical kg	100 W	12	8	5	3
		200 W	17	12	6	4
		400 W	17	12	6	4
Max. speed		mm/s	250	500	800	1000
Rated thrust *1*2	100 W	N	341	170	106	85
	200 W	N	683	341	213	174
	400 W	N	1388	694	433	347
Repeatability		mm	±0.01			
Lost motion		mm	0.1 or less			
Dynamic allowable load		N	4822			
Static allowable moment		N·m	MP: 175, MY: 174, MR: 153			
Dynamic allowable moment		N·m	MP: 45.1, MY: 45.1, MR: 191.7			
Operating ambient temperature, humidity			0 to 40°C (no freezing) 35 to 80% RH (no condensation)			
Storage ambient temperature, humidity			-10 to 50°C (no freezing) 35 to 80% RH (no condensation)			
Atmosphere			No corrosive gas, explosive gas, or dust			

*1 100 W can be selected only with metal stopper (ETS-X) specifications.
*2 Rated thrust and max. load capacity are guideline values assuming that the motor mounted will output the rated torque.

Stroke and max. speed

(mm/s)

Screw lead \ Stroke length	100 to 750	800	850	900	950	1050
5	250	225	200	175	150	125
10	500	450	400	350	300	250
16	800	720	640	560	480	400
20	1000	900	800	700	600	500

*The max. speed is the speed when the motor mounted by the customer can output a rotation speed of 3000 rpm.

Allowable overhang length

*Refer to page 152 for details.

Moment direction

MP

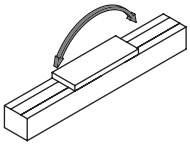

MY

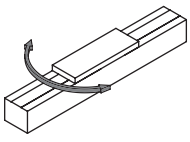

MR

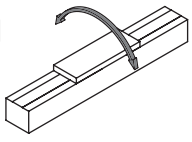

Dimensions Motor right-side mounting

● ETS-13-*****-R

· Refer to page 158 for grease nipple dimensions.

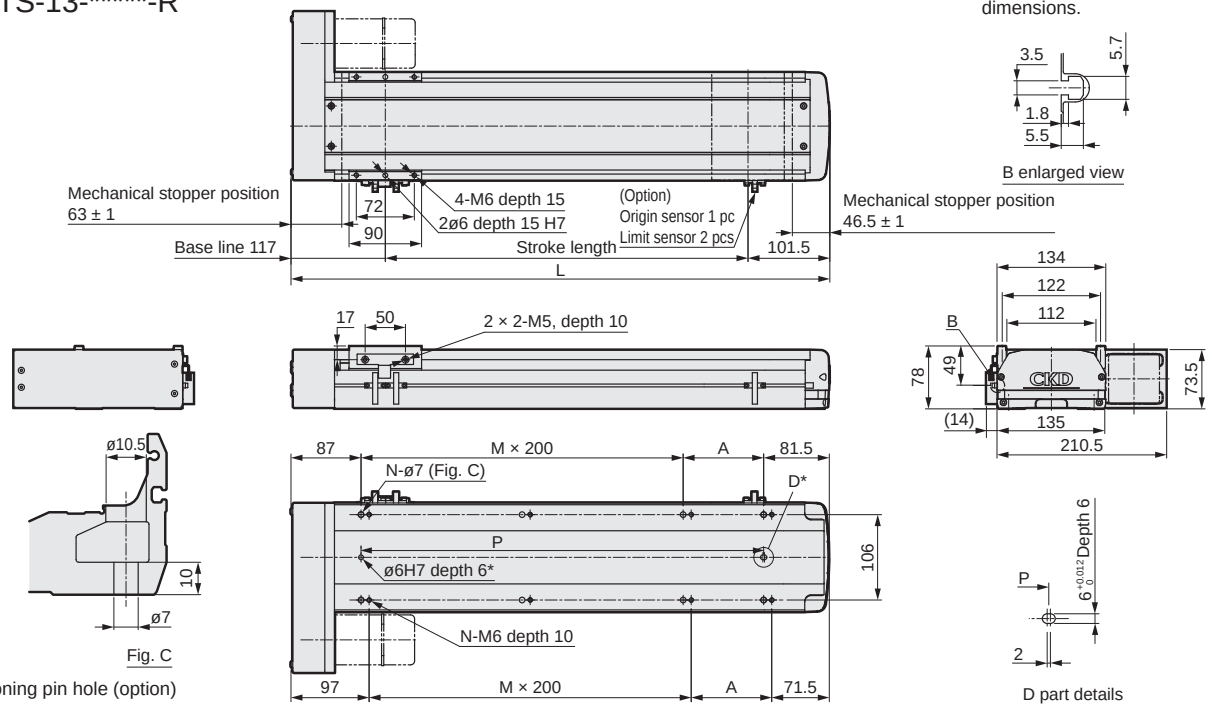

*Positioning pin hole (option)

Stroke length (mm)	50	100	150	200	250	300	350	400	450	500	550	600	650	700	750	800	850	900	950	1000	1050
L	268.5	318.5	368.5	418.5	468.5	518.5	568.5	618.5	668.5	718.5	768.5	818.5	868.5	918.5	968.5	1018.5	1068.5	1118.5	1168.5	1218.5	1268.5
A	100	150	200	50	100	150	200	50	100	150	200	50	100	150	200	50	100	150	200	50	100
M	0	0	0	1	1	1	1	2	2	2	2	3	3	3	3	4	4	4	4	5	5
N	4	4	4	6	6	6	6	8	8	8	8	10	10	10	10	12	12	12	12	14	14
P	100	150	200	250	300	350	400	450	500	550	600	650	700	750	800	850	900	950	1000	1050	1100
Weight (kg)	6.7	7.3	7.7	8.2	8.7	9.2	9.7	10.1	10.7	11.1	11.7	12.1	12.6	13.1	13.6	14.1	14.6	15.1	15.6	16.0	16.6

Motor mounting part

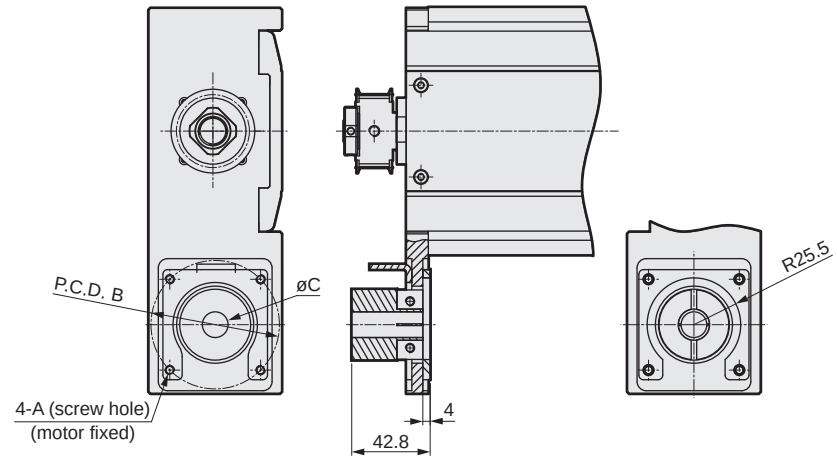

Mounted motor specification		A	B	C	Motor mounting bolt
M	100 W/200 W/400 W	M4/M5/M5	ø46/ø70/ø70	ø8/ø14/ø14	4-M5 × L18/4-M5 × L25
Y	100 W/200 W/400 W	M4/M5/M5	ø46/ø70/ø70	ø8/ø14/ø14	4-M5 × L18/4-M5 × L25
P	100 W/200 W/400 W	M3/M4/M4	ø45/ø70/ø70	ø8/ø11/ø14	4-M4 × L18/4-M4 × L25
F	100 W/200 W/400 W	M4/M5/M5	ø46/ø70/ø70	ø8/ø9/ø14	4-M5 × L18/4-M5 × L25 4-M5 × L18

*100 W supports only metal stopper specifications.

List of attachments

[Motor mounting parts]

Mounted motor specification	Timing belt/pulley	Motor capacity	Motor mounting bolt	
			Size	Quantity
M	Included at shipment	100 W/ 200 W/ 400 W	M4/M5/M5	2/4/4
Y			M4/M5/M5	2/4/4
P			M3/M4/M4	4/4/4
F			M4/M5/M5	2/4/4

*100 W supports only metal stopper specifications.

[Origin sensor/Limit sensor]

Manufacturer	Model	Quantity
OMRON Corporation	EE-SX672	3

*Refer to page 156 for sensor specifications.

Dimensions Motor bottom mounting

● ETS-13-*****-D

· Refer to page 158 for grease nipple dimensions.

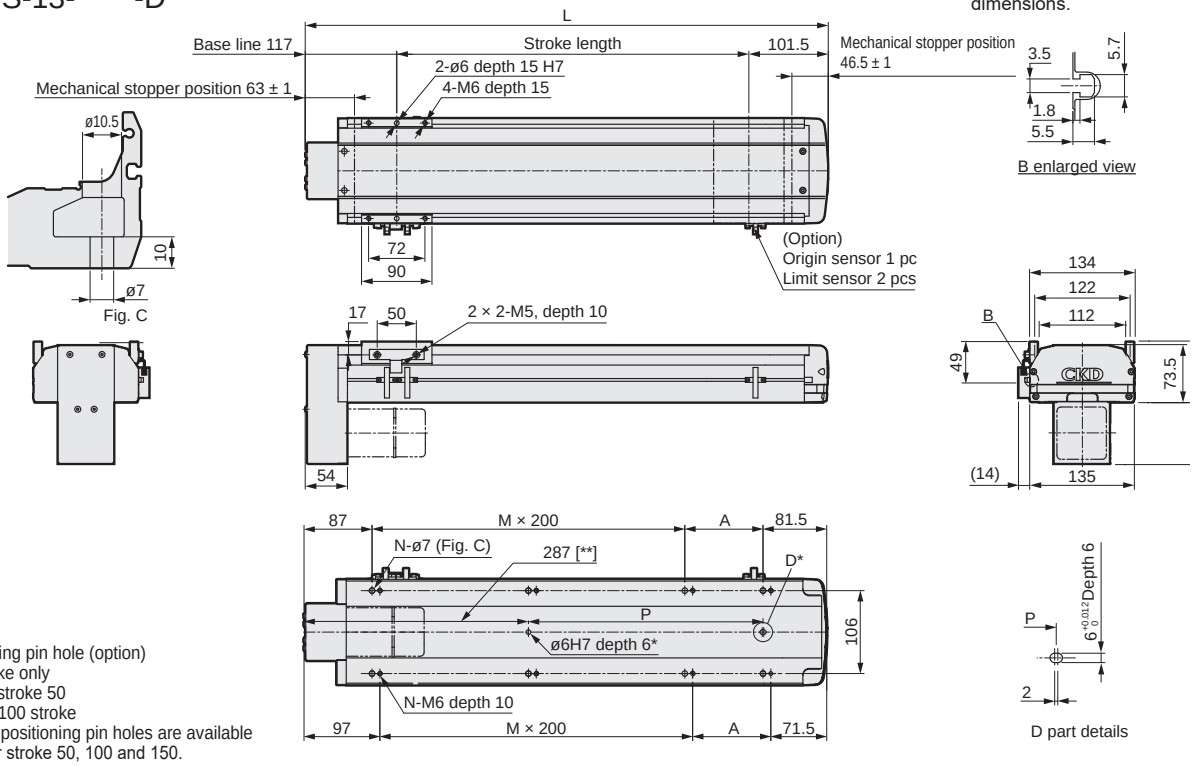

* Positioning pin hole (option)
** 50 stroke only
** 187 at stroke 50
237 at 100 stroke
Round positioning pin holes are available only for stroke 50, 100 and 150.

Stroke length (mm)	50	100	150	200	250	300	350	400	450	500	550	600	650	700	750	800	850	900	950	1000	1050
L	268.5	318.5	368.5	418.5	468.5	518.5	568.5	618.5	668.5	718.5	768.5	818.5	868.5	918.5	968.5	1018.5	1068.5	1118.5	1168.5	1218.5	1268.5
A	0	150	200	50	100	150	200	50	100	150	200	50	100	150	200	50	100	150	200	50	100
M	0	0	0	1	1	1	1	2	2	2	2	3	3	3	3	4	4	4	4	5	5
N	4	4	4	6	6	6	6	8	8	8	8	10	10	10	10	12	12	12	12	14	14
P	0	0	0	50	100	150	200	250	300	350	400	450	500	550	600	650	700	750	800	850	900
Weight (kg)	6.7	7.3	7.7	8.2	8.7	9.2	9.7	10.1	10.7	11.1	11.7	12.1	12.6	13.1	13.6	14.1	14.6	15.1	15.6	16.0	16.6

Motor mounting part

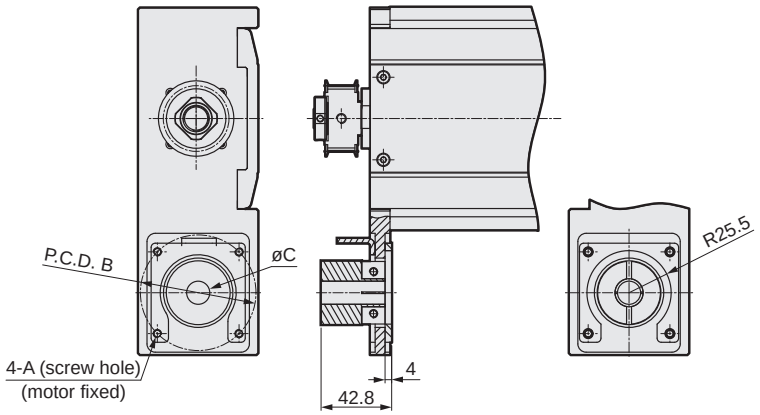

Mounted motor specification		A	B	C	Motor mounting bolt
M	100 W/200 W/400 W	M4/M5/M5	ø46/ø70/ø70	ø8/ø14/ø14	4-M5 × L18/4-M5 × L25
Y	100 W/200 W/400 W	M4/M5/M5	ø46/ø70/ø70	ø8/ø14/ø14	4-M5 × L18/4-M5 × L25
P	100 W/200 W/400 W	M3/M4/M4	ø45/ø70/ø70	ø8/ø11/ø14	4-M4 × L18/4-M4 × L25
F	100 W/200 W/400 W	M4/M5/M5	ø46/ø70/ø70	ø8/ø9/ø14	4-M5 × L18/4-M5 × L25 4-M5 × L18

*100 W supports only metal stopper specifications.

List of attachments

[Motor mounting parts]

Mounted motor specification	Timing belt/pulley	Motor capacity	Motor mounting bolt	
			Size	Quantity
M	Included at shipment	100 W/ 200 W/ 400 W	M4/M5/M5	2/4/4
Y			M4/M5/M5	2/4/4
P			M3/M4/M4	4/4/4
F			M4/M5/M5	2/4/4

*100 W supports only metal stopper specifications.

[Origin sensor/Limit sensor]

Manufacturer	Model	Quantity
OMRON Corporation	EE-SX672	3

*Refer to page 156 for sensor specifications.

Dimensions Motor left-side mounting

● ETS-13-*****-L

· Refer to page 158 for grease nipple dimensions.

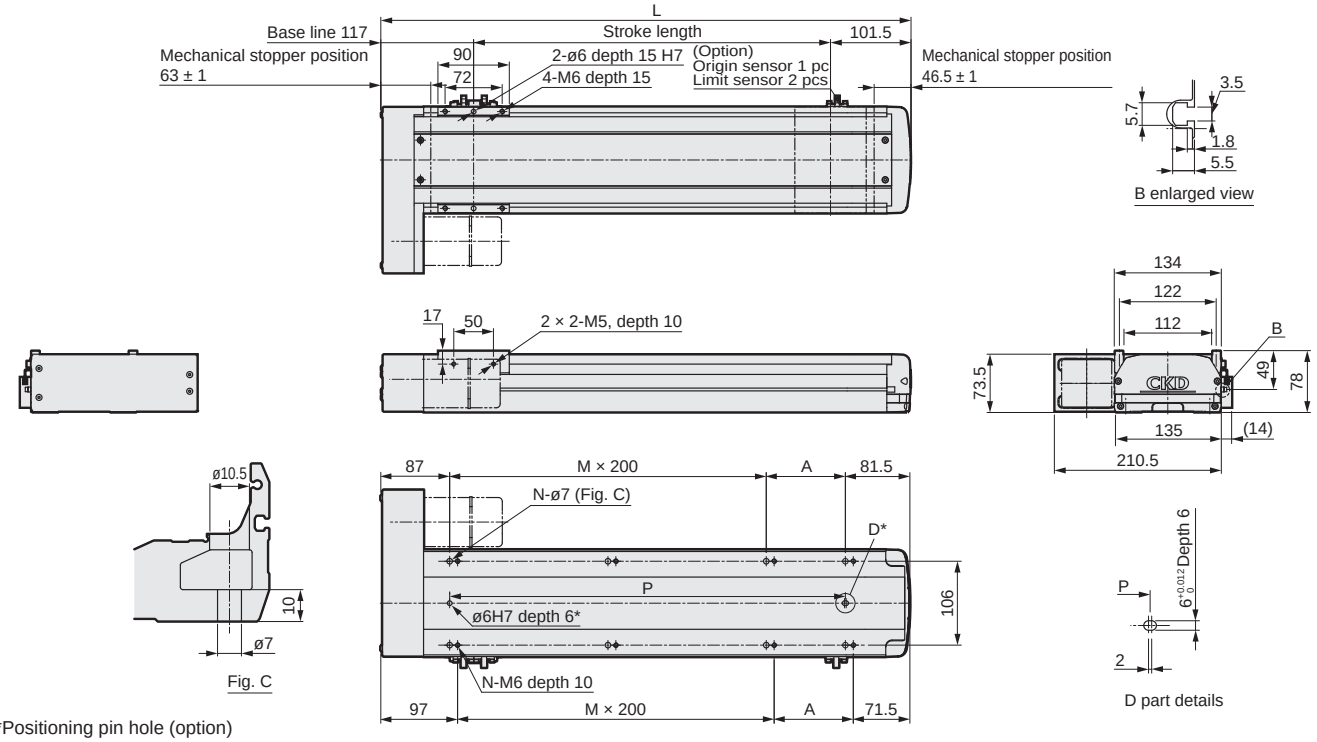

*Positioning pin hole (option)

Stroke length (mm)	50	100	150	200	250	300	350	400	450	500	550	600	650	700	750	800	850	900	950	1000	1050
L	268.5	318.5	368.5	418.5	468.5	518.5	568.5	618.5	668.5	718.5	768.5	818.5	868.5	918.5	968.5	1018.5	1068.5	1118.5	1168.5	1218.5	1268.5
A	100	150	200	50	100	150	200	50	100	150	200	50	100	150	200	50	100	150	200	50	100
M	0	0	0	1	1	1	1	2	2	2	2	3	3	3	3	4	4	4	4	5	5
N	4	4	4	6	6	6	6	8	8	8	8	10	10	10	10	12	12	12	12	14	14
P	100	150	200	250	300	350	400	450	500	550	600	650	700	750	800	850	900	950	1000	1050	1100
Weight (kg)	6.7	7.3	7.7	8.2	8.7	9.2	9.7	10.1	10.7	11.1	11.7	12.1	12.6	13.1	13.6	14.1	14.6	15.1	15.6	16.0	16.6

Motor mounting part

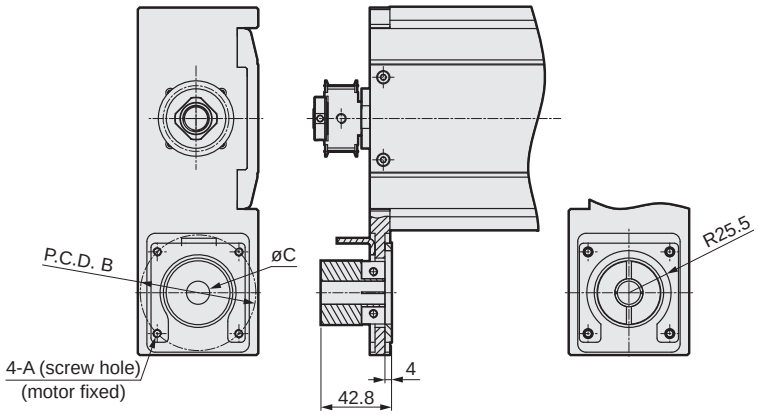

Mounted motor specification		A	B	C	Motor mounting bolt
M	100 W/200 W/400 W	M4/M5/M5	ø46/ø70/ø70	ø8/ø14/ø14	4-M5 × L18/4-M5 × L25
Y	100 W/200 W/400 W	M4/M5/M5	ø46/ø70/ø70	ø8/ø14/ø14	4-M5 × L18/4-M5 × L25
P	100 W/200 W/400 W	M3/M4/M4	ø45/ø70/ø70	ø8/ø11/ø14	4-M4 × L18/4-M4 × L25
F	100 W/200 W/400 W	M4/M5/M5	ø46/ø70/ø70	ø8/ø9/ø14	4-M5 × L18/4-M5 × L25 4-M5 × L18

*100 W supports only metal stopper specifications.

List of attachments

[Motor mounting parts]

Mounted motor specification	Timing belt/pulley	Motor capacity	Motor mounting bolt	
			Size	Quantity
M	Included at shipment	100 W/ 200 W/ 400 W	M4/M5/M5	2/4/4
Y			M4/M5/M5	2/4/4
P			M3/M4/M4	4/4/4
F			M4/M5/M5	2/4/4

*100 W supports only metal stopper specifications.

[Origin sensor/Limit sensor]

Manufacturer	Model	Quantity
OMRON Corporation	EE-SX672	3

*Refer to page 156 for sensor specifications.



Electric actuator Ball screw drive Slider

ETS-14 Series

Straight motor mounting, built-in mounting

● Servo motor capacity: 200 W/400 W

How to order

ETS - 14 - 05 - 005 - E M 2 N N N N N - X

(A) (B) (C) (D) (E) (F) (G) (H) (I) (J) (K) (L)

(A) Body size

14	Body width 135 mm

(B) Screw lead

05	5 mm
10	10 mm
16	16 mm
20	20 mm

(C) Stroke length

005 to 105	50 mm (In 50 mm increments) 1050 mm

(D) Motor mounting direction *1*2

E	Straight mounting
B	Built-in mounting

(E) Mounted motor specification

M	Select the mounted motor specification from the table below.
Y	
P	
F	

(F) Motor capacity

2	200 W
4	400 W

(G) Brake *2

N	None
B	Yes

(H) Origin sensor (1 pc) *3 *4 *5

N	None
A	Inside motor side
B	Inside motor opposite side
C	Outside motor side
D	Outside motor opposite side

(I) Limit sensor (2 pcs) *3 *4 *5

N	None
A	Inside
B	Outside

(J) Grease nipple *5 *6

N	None (Body mounting direction: Standard)
R	Right
L	Left

(K) Positioning pin hole

N	None
P	Yes

(L) Metal stopper specifications (ETS-X) *1

	Standard
X	Yes

Manufacturer	200 W	400 W
Mitsubishi Electric Corporation	M	M
Delta Electronics Co., Ltd.	M	M
Sanyo Denki Co., Ltd.	M	M
YASKAWA Electric Corporation	Y	Y
Keyence Corporation	Y	Y
Panasonic Corporation	P	P
OMRON Corporation	P	P
Fuji Electric Co., Ltd.	M	M
FANUC CORPORATION	F	F
DENSO WAVE Incorporated (ETS-X only)	M	M
Bosch Rexroth AG	P	P
Rockwell Automation, Inc.	M	M
SIEMENS AG	M	M

*Refer to page 89 for the motor model No.

*1: Built-in mounting cannot be selected with metal stopper specifications.
*2: "Yes" to the Brake can be selected only when the motor mounting direction is built-in mounting.
*3: Origin sensor and limit sensor are available as a set. As it is both-or-nothing, select "None" for both.
*4: For sensor inside mounting, the user cannot adjust the position. (Assembled at shipment)
For sensor outside mounting, the user can adjust the position. (Included at shipment)
*5: Contact CKD to use the origin sensor, limit sensor and grease nipple in the same direction.
*6: "Body mounting direction: Standard" here indicates that either top or bottom mounting is possible.

Specifications

Applicable motor capacity		200 W/400 W servo motor			
Drive method		Ball screw ø16			
Ball screw accuracy grade		C7			
Stroke length	mm	50 to 1050			
Screw lead	mm	5	10	16	20
Max. load capacity *1	Horizontal 200 W kg	95	75	44	35
	Horizontal 400 W kg	110	88	48	40
	Vertical 200 W kg	27	18	7	6
	Vertical 400 W kg	33	22	10	8
Max. speed	mm/s	250	500	800	1000
Rated thrust *1	200 W N	683	341	213	174
	400 W N	1388	694	433	347
Repeatability	mm	±0.01			
Lost motion	mm	0.1 or less			
Dynamic allowable load	N	6567			
Static allowable moment	N·m	MP: 552.0, MY: 551.0, MR: 485.0			
Dynamic allowable moment	N·m	MP: 262.7, MY: 262.7, MR: 261.0			
Operating ambient temperature, humidity		0 to 40°C (no freezing) 35 to 80% RH (no condensation)			
Storage ambient temperature, humidity		-10 to 50°C (no freezing) 35 to 80% RH (no condensation)			
Atmosphere		No corrosive gas, explosive gas, or dust			

*1 Rated thrust and max. load capacity are guideline values assuming that the motor mounted will output the rated torque.

Stroke and max. speed

(mm/s)

Screw lead \ Stroke length	100 to 750	800	850	900	950	1050
5	250	225	200	175	150	125
10	500	450	400	350	300	250
16	800	720	640	560	480	400
20	1000	900	800	700	600	500

*The max. speed is the speed when the motor mounted by the customer can output a rotation speed of 3000 rpm.

Allowable overhang length

*Refer to page 152 for details.

Moment direction

MP MY MR

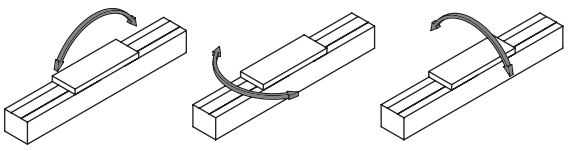

Dimensions Straight motor mounting

● ETS-14-*****-E

· Refer to page 158 for grease nipple dimensions.

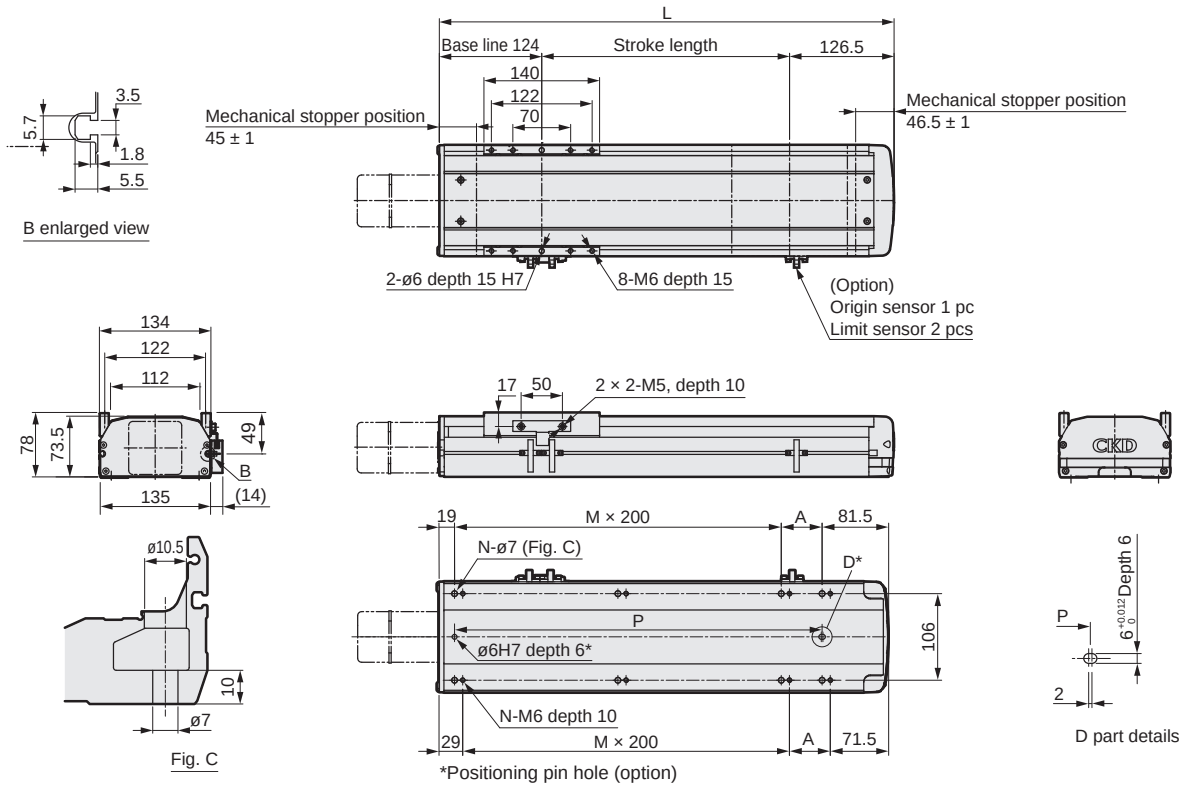

Stroke length (mm)	50	100	150	200	250	300	350	400	450	500	550	600	650	700	750	800	850	900	950	1000	1050
L	300.5	350.5	400.5	450.5	500.5	550.5	600.5	650.5	700.5	750.5	800.5	850.5	900.5	950.5	1000.5	1050.5	1100.5	1150.5	1200.5	1250.5	1300.5
A	200	50	100	150	200	50	100	150	200	50	100	150	200	50	100	150	200	50	100	150	200
M	0	1	1	1	1	2	2	2	2	3	3	3	3	4	4	4	4	5	5	5	5
N	4	6	6	6	6	8	8	8	8	10	10	10	10	12	12	12	12	14	14	14	14
P	200	250	300	350	400	450	500	550	600	650	700	750	800	850	900	950	1000	1050	1100	1150	1200
Weight (kg)	6.1	6.7	7.1	7.6	8.1	8.6	9.1	9.5	10.1	10.5	11.1	11.5	12.0	12.5	13.0	13.5	14.0	14.5	15.0	15.4	16.0

Motor mounting part

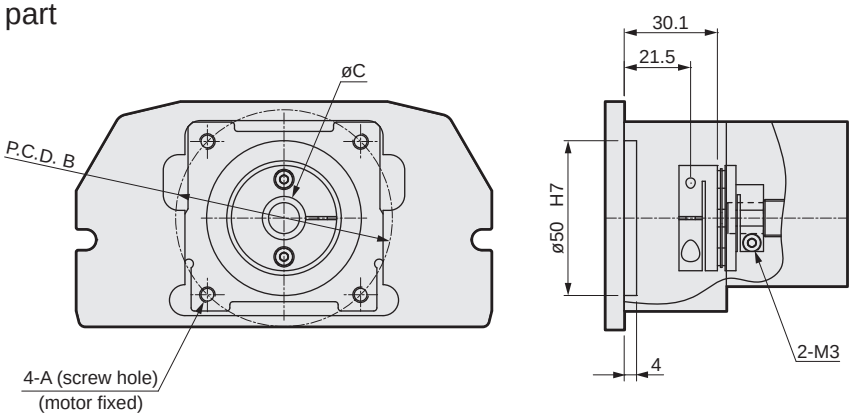

Mounted motor specification		A	B	C	Motor mounting bolt
M	200 W/400 W	M5	ø70	ø14	4-M5 × L18
Y	200 W/400 W	M5	ø70	ø14	4-M5 × L18
P	200 W/400 W	M4	ø70	ø11/ø14	4-M4 × L18
F	200 W/400 W	M5	ø70	ø9/ø14	4-M5 × L16/4-M5 × L18

List of attachments

[Motor mounting parts]

Mounted motor specification	Coupling	Motor capacity	Motor mounting bolt	
			Size	Quantity
M	Assembled at shipment	200 W/400 W	M5	4
Y			M5	4
P			M4	4
F			M5	4

[Origin sensor/Limit sensor]

Manufacturer	Model	Quantity
OMRON Corporation	EE-SX672	3

*Refer to page 156 for sensor specifications.

Dimensions Motor built-in mounting

● ETS-14-*****-B

· Refer to page 158 for grease nipple dimensions.

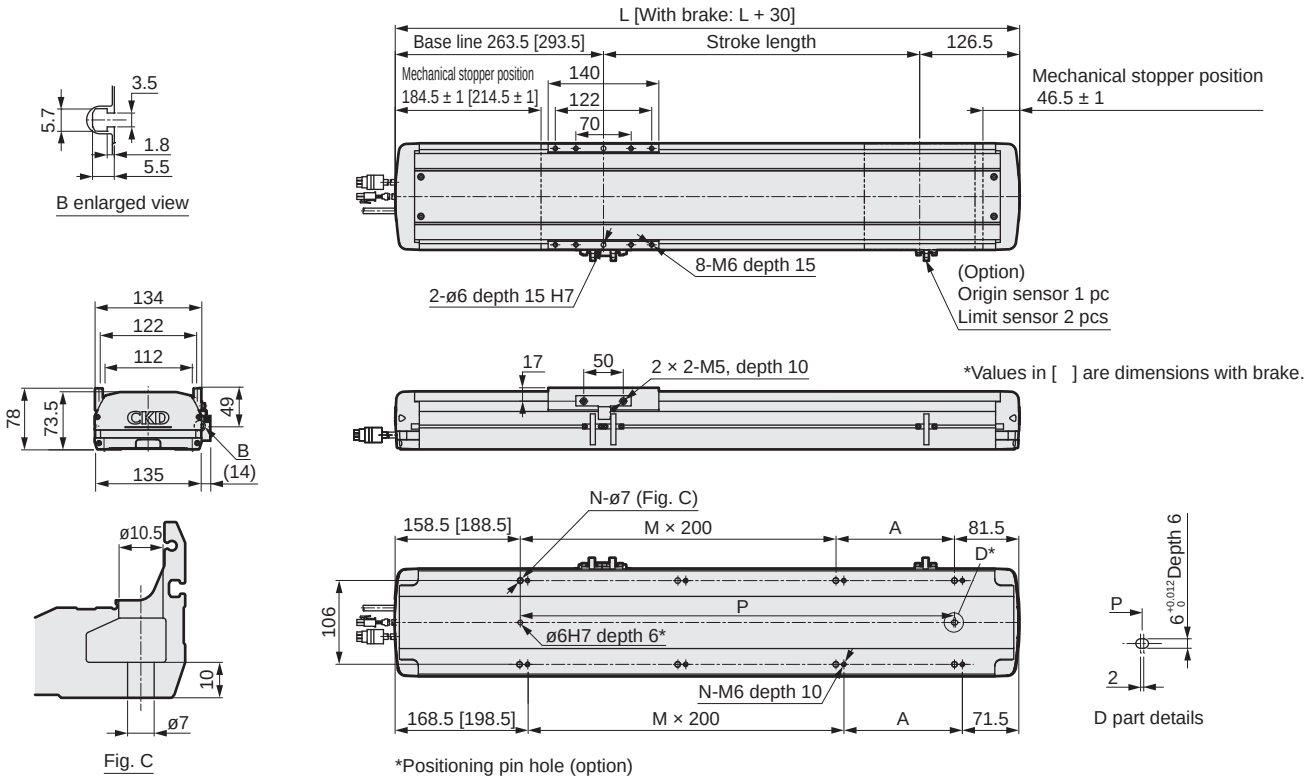

Stroke length (mm)		50	100	150	200	250	300	350	400	450	500	550	600	650	700	750	800	850	900	950	1000	1050
L		440	490	540	590	640	690	740	790	840	890	940	990	1040	1090	1140	1190	1240	1290	1340	1390	1440
A		200	50	100	150	200	50	100	150	200	50	100	150	200	50	100	150	200	50	100	150	200
M		0	1	1	1	1	2	2	2	2	3	3	3	3	4	4	4	4	5	5	5	5
N		4	6	6	6	6	8	8	8	8	10	10	10	10	12	12	12	12	14	14	14	14
P		200	250	300	350	400	450	500	550	600	650	700	750	800	850	900	950	1000	1050	1100	1150	1200
Weight (kg)	Without brake	8.3	9.3	10.3	11.2	12.2	13.1	14.1	15.0	16.0	16.9	17.9	18.8	19.8	20.7	21.7	22.6	23.6	24.5	25.5	26.4	27.4
	With brake	8.9	9.9	10.8	11.8	12.7	13.7	14.6	15.6	16.5	17.5	18.4	19.4	20.3	21.3	22.2	23.2	24.1	25.1	26.0	27.0	27.9

Motor mounting part

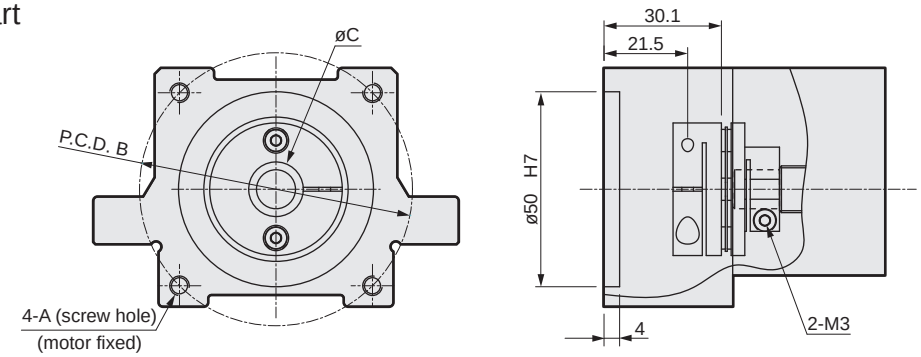

Mounted motor specification		A	B	C	Motor mounting bolt
M	200 W/400 W	M5	ø70	ø14	4-M5 × L18
Y	200 W/400 W	M5	ø70	ø14	4-M5 × L18
P	200 W/400 W	M4	ø70	ø11/ø14	4-M4 × L18

List of attachments

[Motor mounting parts]

Mounted motor specification	Coupling	Motor capacity	Motor mounting bolt	
			Size	Quantity
M	Assembled at shipment	200 W/400 W	M5	4
Y			M5	4
P			M4	4

[Origin sensor/Limit sensor]

Manufacturer	Model	Quantity
OMRON Corporation	EE-SX672	3

*Refer to page 156 for sensor specifications.

MEMO



Electric actuator Ball screw drive Slider

ETS-14 Series

Motor side mounting (left, right, bottom)

● Servo motor capacity: 200 W/400 W

How to order

ETS - 14 - 05 - 005 - R M 2 N N N N N - X

(A) (B) (C) (D) (E) (F) (G) (H) (I) (J) (K) (L)

(A) Body size

14	Body width 135 mm

(B) Screw lead

05	5 mm
10	10 mm
16	16 mm
20	20 mm

(C) Stroke length

005 to 105	50 mm (In 50 mm increments) 1050 mm

(D) Motor mounting direction *5

R	Right mounting
D	Bottom mounting
L	Left mounting

(E) Mounted motor specification

M	Select the mounted motor specification from the table below.
Y	
P	
F	

(F) Motor capacity

2	200 W
4	400 W

(G) Brake

N	None

(H) Origin sensor (1 pc) *1 *2 *3

N	None
A	Inside motor side
B	Inside motor opposite side
C	Outside motor side
D	Outside motor opposite side

(I) Limit sensor (2 pcs) *1 *2 *3

N	None
A	Inside
B	Outside

(J) Grease nipple *3 *4 *5

N	None (Body mounting direction: Standard)
R	Right
L	Left

(K) Positioning pin hole

N	None
P	Yes

(L) Metal stopper specifications (ETS-X)

	Standard
X	Yes

Manufacturer	200 W	400 W
Mitsubishi Electric Corporation	M	M
Delta Electronics Co., Ltd.	M	M
Sanyo Denki Co., Ltd.	M	M
YASKAWA Electric Corporation	Y	Y
Keyence Corporation	Y	Y
Panasonic Corporation	P	P
OMRON Corporation	P	P
Fuji Electric Co., Ltd.	M	M
FANUC CORPORATION	F	F
DENSO WAVE Incorporated (ETS-X only)	M	M
Bosch Rexroth AG	P	P
Rockwell Automation, Inc.	M	M
SIEMENS AG	M	M

*Refer to page 89 for the motor model No.

*1: Origin sensor and limit sensor are available as a set. As it is both-or-nothing, select "None" for both.
*2: For sensor inside mounting, the user cannot adjust the position. (Assembled at shipment)
For sensor outside mounting, the user can adjust the position. (Included at shipment)
*3: Contact CKD to use the origin sensor, limit sensor and grease nipple in the same direction.
*4: "Body mounting direction: Standard" here indicates that either top or bottom mounting is possible.
*5: When selecting motor mounting direction R, grease nipple R cannot be selected.
When selecting L, grease nipple L cannot be selected.

Specifications

Applicable motor capacity		200 W/400 W servo motor			
Drive method		Ball screw ø16			
Ball screw accuracy grade		C7			
Stroke length *1 mm		50 to 1050			
Screw lead mm		5	10	16	20
Max. load capacity *1	Horizontal 200 W kg	95	75	44	35
	Horizontal 400 W kg	110	88	48	40
	Vertical 200 W kg	27	18	7	6
	Vertical 400 W kg	33	22	10	8
Max. speed mm/s		250	500	800	1000
Rated thrust *1	200 W N	683	341	213	174
	400 W N	1388	694	433	347
Repeatability mm		±0.01			
Lost motion mm		0.1 or less			
Dynamic allowable load N		6567			
Static allowable moment N·m		MP: 552.0, MY: 551.0, MR: 485.0			
Dynamic allowable moment N·m		MP: 262.7, MY: 262.7, MR: 261.0			
Operating ambient temperature, humidity		0 to 40°C (no freezing) 35 to 80% RH (no condensation)			
Storage ambient temperature, humidity		-10 to 50°C (no freezing) 35 to 80% RH (no condensation)			
Atmosphere		No corrosive gas, explosive gas, or dust			

*1 Rated thrust and max. load capacity are guideline values assuming that the motor mounted will output the rated torque.

Stroke and max. speed

(mm/s)

Screw lead \ Stroke length	100 to 750	800	850	900	950	1050
5	250	225	200	175	150	125
10	500	450	400	350	300	250
16	800	720	640	560	480	400
20	1000	900	800	700	600	500

*The max. speed is the speed when the motor mounted by the customer can output a rotation speed of 3000 rpm.

Allowable overhang length

*Refer to page 152 for details.

Moment direction

MP MY MR

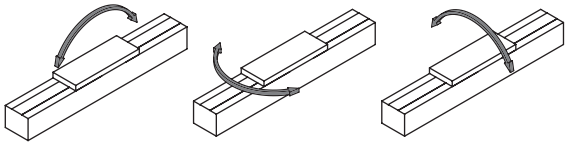

Dimensions Motor right-side mounting

● ETS-14-*****-R

· Refer to page 158 for grease nipple dimensions.

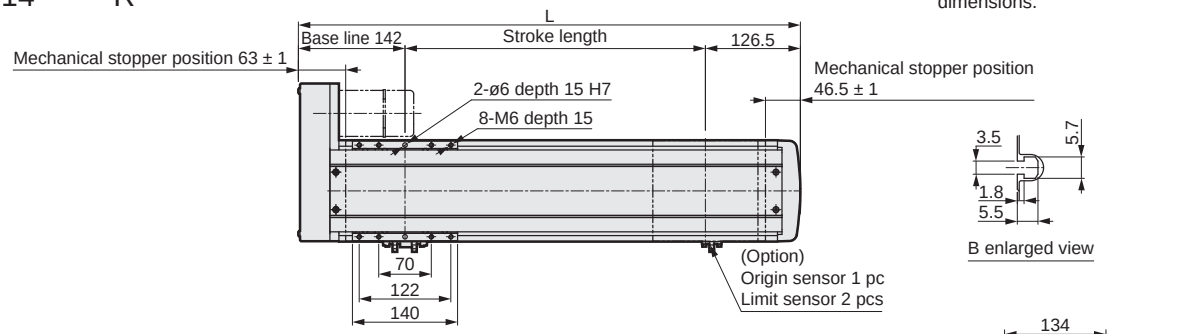

Stroke length (mm)	50	100	150	200	250	300	350	400	450	500	550	600	650	700	750	800	850	900	950	1000	1050
L	318.5	368.5	418.5	468.5	518.5	568.5	618.5	668.5	718.5	768.5	818.5	868.5	918.5	968.5	1018.5	1068.5	1118.5	1168.5	1218.5	1268.5	1318.5
A	150	200	50	100	150	200	50	100	150	200	50	100	150	200	50	100	150	200	50	100	150
M	0	0	1	1	1	1	2	2	2	2	3	3	3	3	4	4	4	4	5	5	5
N	4	4	6	6	6	6	8	8	8	8	10	10	10	10	12	12	12	12	14	14	14
P	150	200	250	300	350	400	450	500	550	600	650	700	750	800	850	900	950	1000	1050	1100	1150
Weight (kg)	6.9	7.5	7.9	8.4	8.9	9.4	9.9	10.3	10.9	11.3	11.9	12.3	12.8	13.3	13.8	14.3	14.8	15.3	15.8	16.2	16.8

Motor mounting part

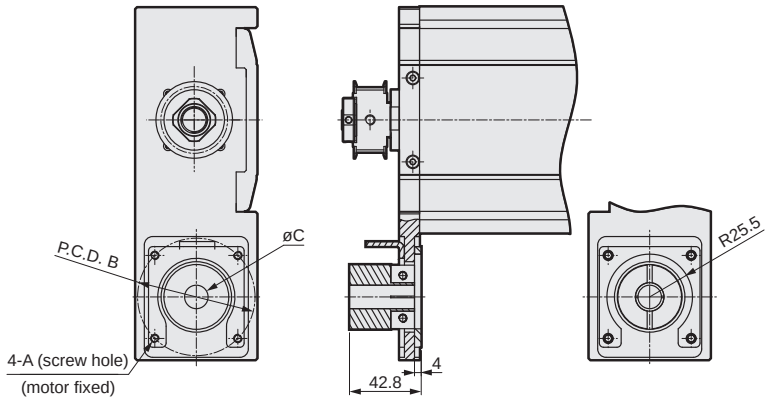

Mounted motor specification		A	B	C	Motor mounting bolt
M	200 W/400 W	M5	ø70	ø14	4-M5 × L18
Y	200 W/400 W	M5	ø70	ø14	4-M5 × L18
P	200 W/400 W	M4	ø70	ø11/ø14	4-M4 × L18
F	200 W/400 W	M5	ø70	ø9/ø14	4-M5 × L18

List of attachments

[Motor mounting parts]

Mounted motor specification	Timing belt, pulley	Motor capacity	Motor mounting bolt	
			Size	Quantity
M	Included at shipment	200 W/400 W	M5	4
Y			M5	4
P			M4	4
F			M5	4

[Origin sensor/Limit sensor]

Manufacturer	Model	Quantity
OMRON Corporation	EE-SX672	3

*Refer to page 156 for sensor specifications.

Dimensions Motor bottom mounting

● ETS-14-*****-D

· Refer to page 158 for grease nipple dimensions.

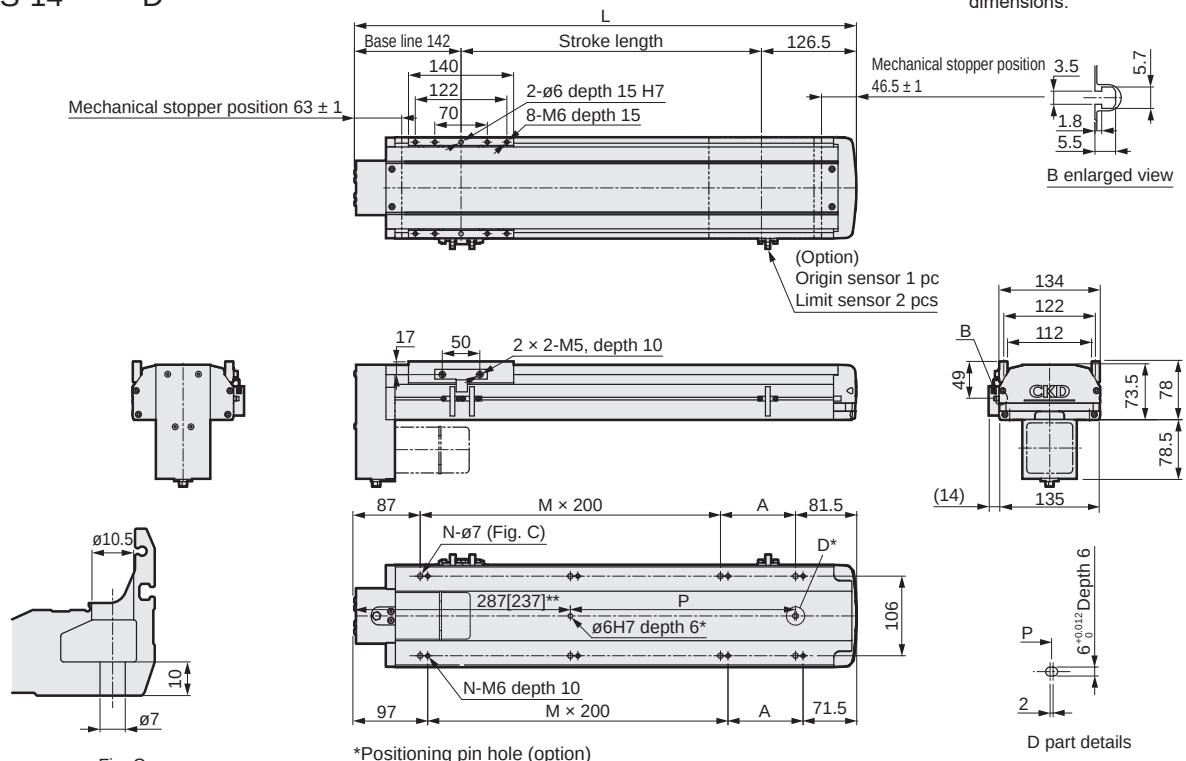

*Positioning pin hole (option)
** 50 stroke only
Round positioning pin holes are available only for stroke 50 and 100.

Stroke length (mm)	50	100	150	200	250	300	350	400	450	500	550	600	650	700	750	800	850	900	950	1000	1050
L	318.5	368.5	418.5	468.5	518.5	568.5	618.5	668.5	718.5	768.5	818.5	868.5	918.5	968.5	1018.5	1068.5	1118.5	1168.5	1218.5	1268.5	1318.5
A	150	200	50	100	150	200	50	100	150	200	50	100	150	200	50	100	150	200	50	100	150
M	0	0	1	1	1	1	2	2	2	2	3	3	3	3	4	4	4	4	5	5	5
N	4	4	6	6	6	6	8	8	8	8	10	10	10	10	12	12	12	12	14	14	14
P	0	0	50	100	150	200	250	300	350	400	450	500	550	600	650	700	750	800	850	900	950
Weight (kg)	6.9	7.5	7.9	8.4	8.9	9.4	9.9	10.3	10.9	11.3	11.9	12.3	12.8	13.3	13.8	14.3	14.8	15.3	15.8	16.2	16.8

Motor mounting part

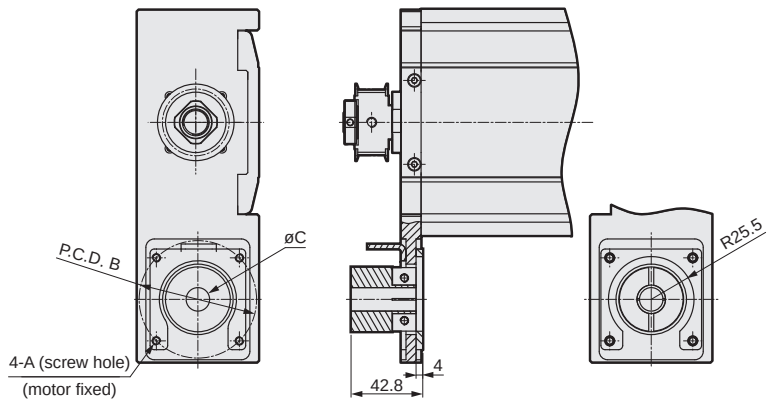

Mounted motor specification		A	B	C	Motor mounting bolt
M	200 W/400 W	M5	ø70	ø14	4-M5 × L18
Y	200 W/400 W	M5	ø70	ø14	4-M5 × L18
P	200 W/400 W	M4	ø70	ø11/ø14	4-M4 × L18
F	200 W/400 W	M5	ø70	ø9/ø14	4-M5 × L18

List of attachments

[Motor mounting parts]

Mounted motor specification	Timing belt, pulley	Motor capacity	Motor mounting bolt	
			Size	Quantity
M	Included at shipment	200 W/400 W	M5	4
Y			M5	4
P			M4	4
F			M5	4

[Origin sensor/Limit sensor]

Manufacturer	Model	Quantity
OMRON Corporation	EE-SX672	3

*Refer to page 156 for sensor specifications.

Dimensions Motor left-side mounting

● ETS-14-*****-L

· Refer to page 158 for grease nipple dimensions.

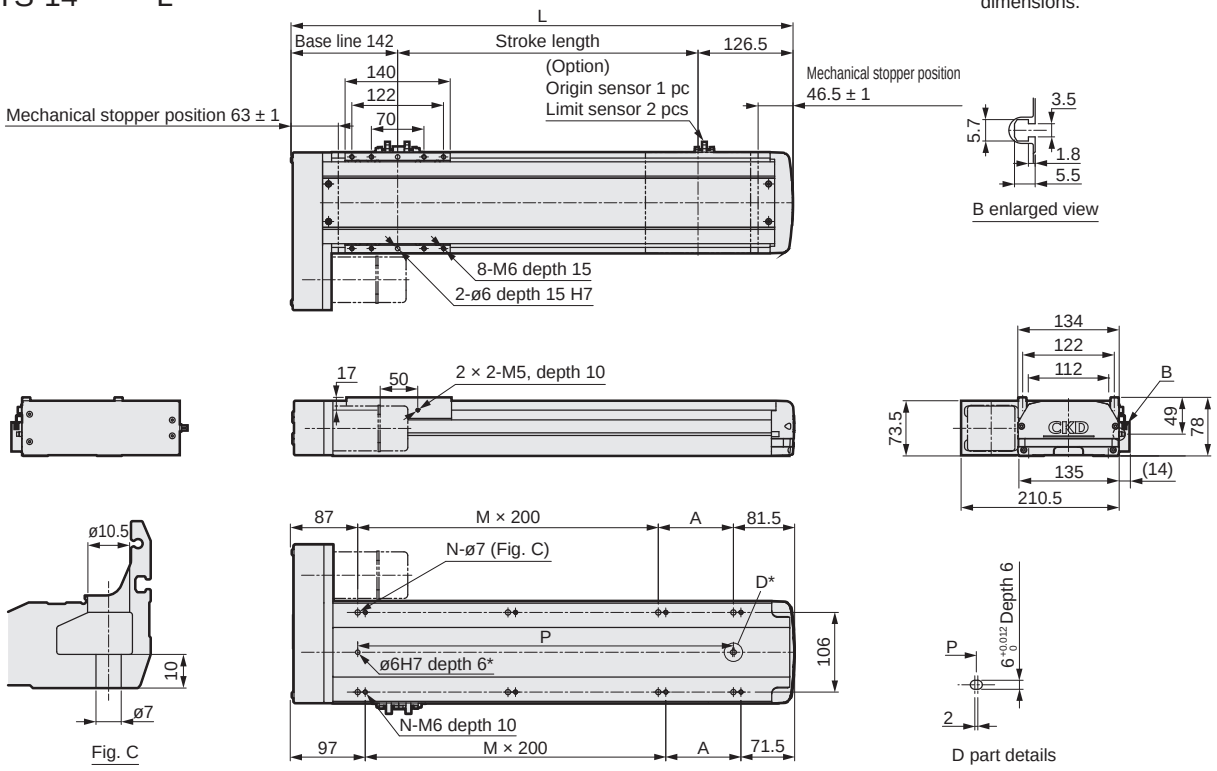

*Positioning pin hole (option)

Stroke length (mm)	50	100	150	200	250	300	350	400	450	500	550	600	650	700	750	800	850	900	950	1000	1050
L	318.5	368.5	418.5	468.5	518.5	568.5	618.5	668.5	718.5	768.5	818.5	868.5	918.5	968.5	1018.5	1068.5	1118.5	1168.5	1218.5	1268.5	1318.5
A	150	200	50	100	150	200	50	100	150	200	50	100	150	200	50	100	150	200	50	100	150
M	0	0	1	1	1	1	2	2	2	2	3	3	3	3	4	4	4	4	5	5	5
N	4	4	6	6	6	6	8	8	8	8	10	10	10	10	12	12	12	12	14	14	14
P	150	200	250	300	350	400	450	500	550	600	650	700	750	800	850	900	950	1000	1050	1100	1150
Weight (kg)	6.9	7.5	7.9	8.4	8.9	9.4	9.9	10.3	10.9	11.3	11.9	12.3	12.8	13.3	13.8	14.3	14.8	15.3	15.8	16.2	16.8

Motor mounting part

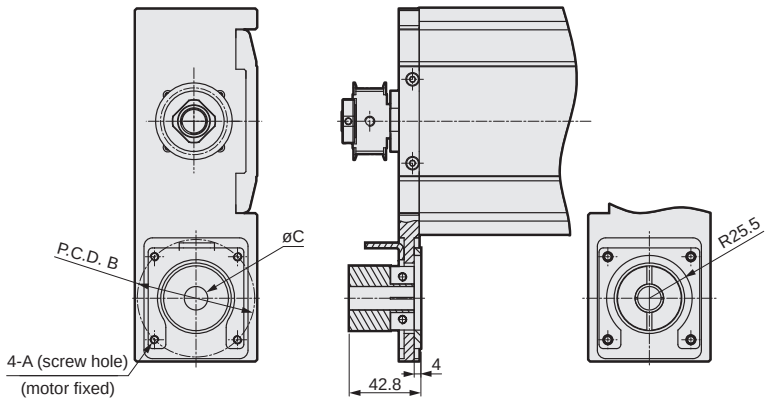

Mounted motor specification		A	B	C	Motor mounting bolt
M	200 W/400 W	M5	ø70	ø14	4-M5 × L18
Y	200 W/400 W	M5	ø70	ø14	4-M5 × L18
P	200 W/400 W	M4	ø70	ø11/ø14	4-M4 × L18
F	200 W/400 W	M5	ø70	ø9/ø14	4-M5 × L18

List of attachments

[Motor mounting parts]

Mounted motor specification	Timing belt, pulley	Motor capacity	Motor mounting bolt	
			Size	Quantity
M	Included at shipment	200 W/400 W	M5	4
Y			M5	4
P			M4	4
F			M5	4

[Origin sensor/Limit sensor]

Manufacturer	Model	Quantity
OMRON Corporation	EE-SX672	3

*Refer to page 156 for sensor specifications.



Electric actuator Ball screw drive Slider

ETS-17 Series

Straight motor mounting, built-in mounting

● Servo motor capacity: 400 W/750 W

How to order

ETS - 17 - 05 - 005 - E M 4 N N N N N - X

(A) (B) (C) (D) (E) (F) (G) (H) (I) (J) (K) (L)

(A) Body size

17	Body width 170 mm

(B) Screw lead

05	5 mm
10	10 mm
20	20 mm
40	40 mm

(C) Stroke length *1 *2

005 to 125	100 mm (In 50 mm increments) 1250 mm

(D) Motor mounting direction *1 *2

E	Straight mounting
B	Built-in mounting

(E) Mounted motor specification

M	Select the mounted motor specification from the table below.
Y	
P	
F	

(F) Motor capacity *1

4	400 W
8	750 W

(G) Brake *2

N	None
B	Yes

(H) Origin sensor (1 pc) *3 *4 *5

N	None
A	Inside motor side
B	Inside motor opposite side
C	Outside motor side
D	Outside motor opposite side

(I) Limit sensor (2 pcs) *3 *4 *5

N	None
A	Inside
B	Outside

(J) Grease nipple *5 *6

N	None (Body mounting direction: Standard)
R	Right
L	Left

(K) Positioning pin hole

N	None
P	Yes

(L) Metal stopper specifications (ETS-X) *1

	Standard
X	Yes

Manufacturer	400 W	750 W
Mitsubishi Electric Corporation	M	M
Delta Electronics Co., Ltd.	M	M
Sanyo Denki Co., Ltd.	M	-
YASKAWA Electric Corporation	Y	Y
Keyence Corporation	Y	Y
Panasonic Corporation	P	P
OMRON Corporation	P	P
Fuji Electric Co., Ltd.	M	M
FANUC CORPORATION	F	F
DENSO WAVE Incorporated (ETS-X only)	M	-
Bosch Rexroth AG	P	P
Rockwell Automation, Inc.	M	M
SIEMENS AG	M	M

*Refer to page 89 for the motor model No.

*1: The built-in mounting motor mounting direction cannot be selected for the 750 W motor capacity. Built-in mounting cannot be selected with metal stopper specifications either.
*2: "Yes" to the Brake can be selected only when the motor mounting direction is built-in mounting.
*3: Origin sensor and limit sensor are available as a set. As it is both-or-nothing, select "None" for both.
*4: For sensor inside mounting, the user cannot adjust the position. (Assembled at shipment) For sensor outside mounting, the user can adjust the position. (Included at shipment)
*5: Contact CKD to use the origin sensor, limit sensor and grease nipple in the same direction.
*6: "Body mounting direction: Standard" here indicates that either top or bottom mounting is possible.

Specifications

Applicable motor capacity			400 W/750 W servo motor			
Drive method			Ball screw ø20			
Ball screw accuracy grade			C7			
Stroke length		mm	50 to 1250			
Screw lead		mm	5	10	20	40
Max. load capacity *1	Horizontal	400 W kg	120	110	75	35
		750 W kg	120	120	83	50
	Vertical	400 W kg	40	30	14	7
		750 W kg	50	40	25	10
Max. speed		mm/s	250	500	1000	2000
Rated thrust *1	400 W	N	1388	694	347	174
	750 W	N	2100	1050	525	260
Repeatability		mm	±0.01			
Lost motion			0.1 or less			
Dynamic allowable load		N	10102			
Static allowable moment		N·m	MP: 1034.0, MY: 1032.0, MR: 908.0			
Dynamic allowable moment		N·m	MP: 424.3, MY: 424.3, MR: 520.3			
Operating ambient temperature, humidity			0 to 40°C (no freezing) 35 to 80% RH (no condensation)			
Storage ambient temperature, humidity			-10 to 50°C (no freezing) 35 to 80% RH (no condensation)			
Atmosphere			No corrosive gas, explosive gas, or dust			

*1 Rated thrust and max. load capacity are guideline values assuming that the motor mounted will output the rated torque.

Stroke and max. speed

(mm/s)

Screw lead \ Stroke length	100 to 850	950	1050	1150	1250
5	250	225	200	175	150
10	500	450	400	350	300
20	1000	900	800	700	600
40	2000	1800	1600	1400	1200

*The max. speed is the speed when the motor mounted by the customer can output a rotation speed of 3000 rpm.

Allowable overhang length

*Refer to page 152 for details.

Moment direction

MP

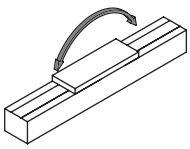

MY

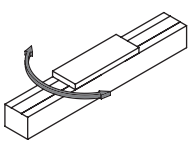

MR

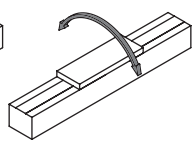

Dimensions Straight motor mounting

● ETS-17-*****-E

· Refer to page 158 for grease nipple dimensions.

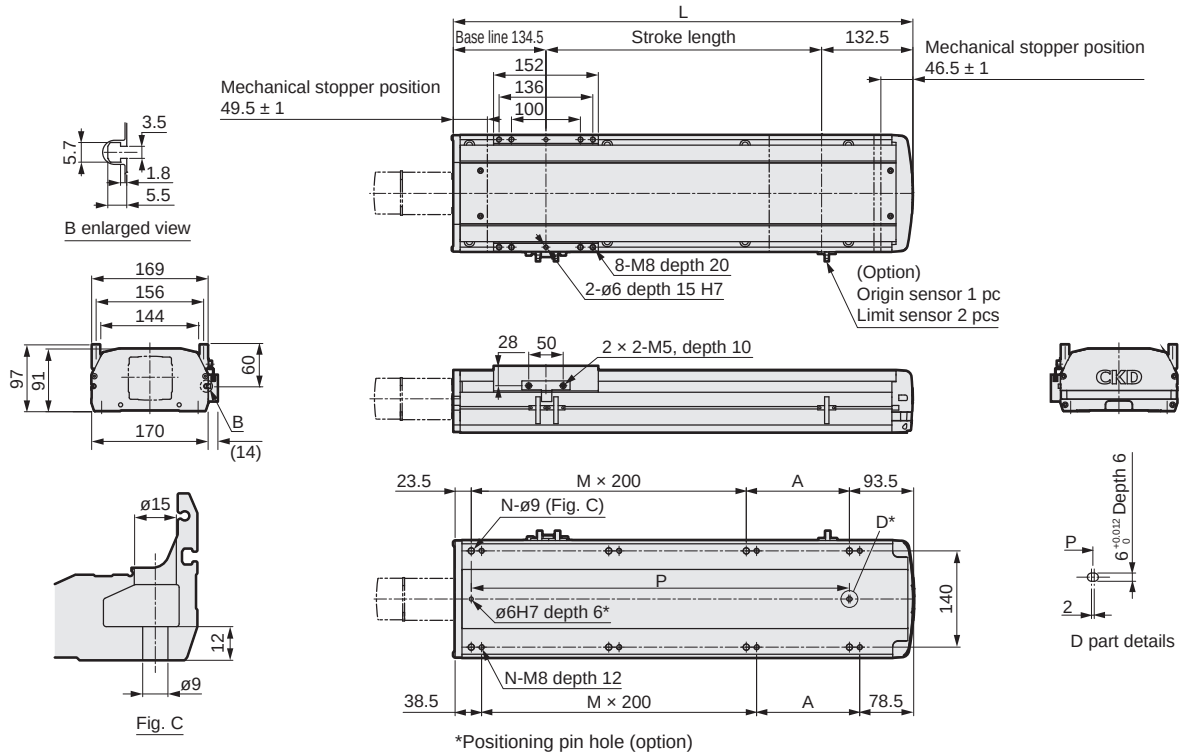

Stroke length (mm)	50	100	150	200	250	300	350	400	450	500	550	600	650	700	750	800	850	900	950	1000	1050	1100	1150	1200	1250
L	317	367	417	467	517	567	617	667	717	767	817	867	917	967	1017	1067	1117	1167	1217	1267	1317	1367	1417	1467	1517
A	200	50	100	150	200	50	100	150	200	50	100	150	200	50	100	150	200	50	100	150	200	50	100	150	200
M	0	1	1	1	1	2	2	2	2	3	3	3	3	4	4	4	4	5	5	5	5	6	6	6	6
N	4	6	6	6	6	8	8	8	8	10	10	10	10	12	12	12	12	14	14	14	14	16	16	16	16
P	200	250	300	350	400	450	500	550	600	650	700	750	800	850	900	950	1000	1050	1100	1150	1200	1250	1300	1350	1400
Weight (kg)	9.5	10.3	11.1	11.9	12.7	13.4	14.2	15.0	15.8	16.5	17.3	18.1	18.9	19.6	20.4	21.2	22.0	22.7	23.5	24.3	25.1	25.9	26.7	27.5	28.3

Motor mounting part

● ETS-17-400W

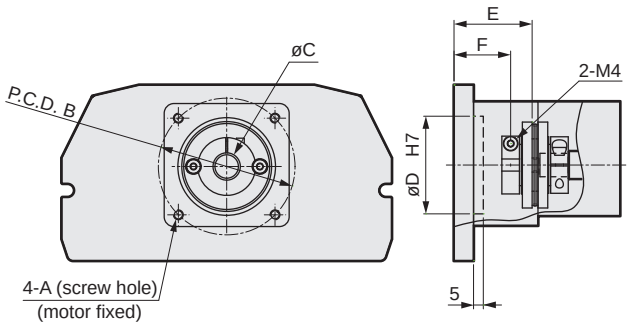

● ETS-17-750W

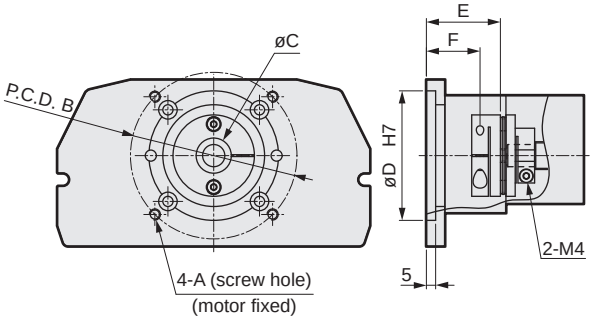

Mounted motor specification		A	B	C	D	E	F	Motor mounting bolt
M	400 W/750 W	M5/M6	ø70/ø90	ø14/ø19	50/70	40	29	4-M5 × L18/4-M6 × L16
Y	400 W/750 W	M5/M6	ø70/ø90	ø14/ø19	50/70	40	29	4-M5 × L18/4-M6 × L16
P	400 W/750 W	M4/M5	ø70/ø90	ø14/ø19	50/70	40	29	4-M4 × L18/4-M5 × L16
F	400 W/750 W	M5/M6	ø70/ø100	ø14/ø14	50/80	40/26	29/15	4-M5 × L18/4-M6 × L16

List of attachments

[Motor mounting parts]

Mounted motor specification	Coupling	Motor capacity	Motor mounting bolt	
			Size	Quantity
M	Assembled at shipment	400 W/750 W	M5/M6	4
Y			M5/M6	4
P			M4/M5	4
F			M5/M6	4

[Origin sensor/Limit sensor]

Manufacturer	Model	Quantity
OMRON Corporation	EE-SX672	3

*Refer to page 156 for sensor specifications.

Dimensions Motor built-in mounting

● ETS-17-*****-B

* 750 W type is not compatible with built-in type.

· Refer to page 158 for grease nipple dimensions.

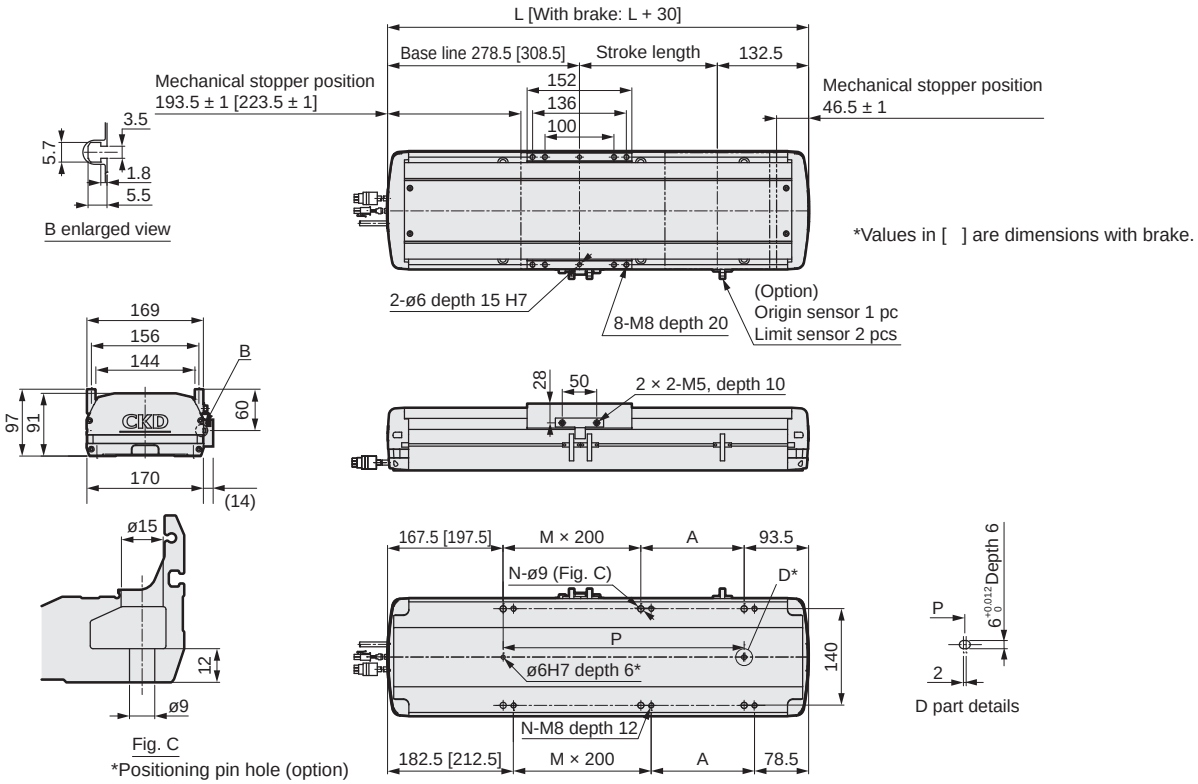

Stroke length (mm)		50	100	150	200	250	300	350	400	450	500	550	600	650	700	750	800	850	900	950	1000	1050	1100	1150	1200	1250
L		461	511	561	611	661	711	761	811	861	911	961	1011	1061	1111	1161	1211	1261	1311	1361	1411	1461	1511	1561	1611	1661
A		200	50	100	150	200	50	100	150	200	50	100	150	200	50	100	150	200	50	100	150	200	50	100	150	200
M		0	1	1	1	1	2	2	2	2	3	3	3	3	4	4	4	4	5	5	5	5	6	6	6	6
N		4	6	6	6	6	8	8	8	8	10	10	10	10	12	12	12	12	14	14	14	14	16	16	16	16
P		200	250	300	350	400	450	500	550	600	650	700	750	800	850	900	950	1000	1050	1100	1150	1200	1250	1300	1350	1400
Weight (kg)	Without brake	12.9	14.3	15.7	17.1	18.6	20.0	21.4	22.8	24.2	25.6	27.0	28.4	29.8	31.2	32.6	34.0	35.4	36.8	38.2	39.6	41.0	42.4	43.8	45.2	46.6
	With brake	13.8	15.2	16.6	18.0	19.4	20.8	22.2	23.6	25.0	26.4	27.8	29.2	30.6	32.0	33.4	34.8	36.2	37.6	39.0	40.4	41.8	43.2	44.7	46.1	47.5

Motor mounting part

* 750 W type is not compatible with built-in type.

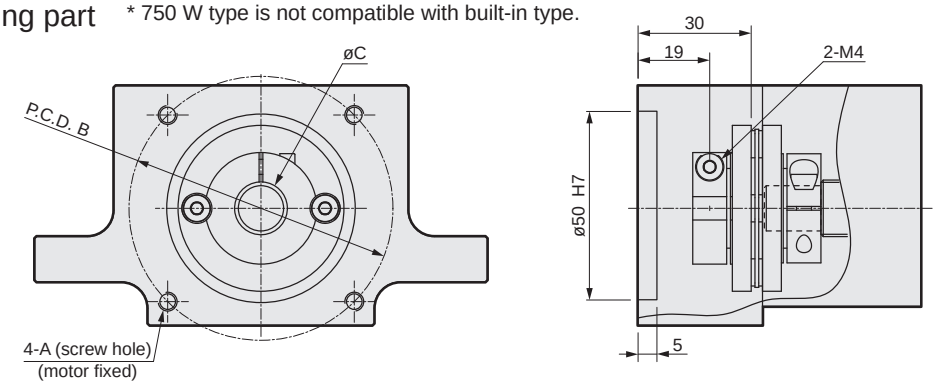

Mounted motor specification		A	B	C	Motor mounting bolt
M	400 W	M5	ø70	ø14	4-M5 × L18
Y	400 W	M5	ø70	ø14	4-M5 × L18
P	400 W	M4	ø70	ø14	4-M4 × L18

List of attachments

[Motor mounting parts]

Mounted motor specification	Coupling	Motor capacity	Motor mounting bolt	
			Size	Quantity
M	Assembled at shipment	400 W	M5	4
Y			M5	4
P			M4	4

[Origin sensor/Limit sensor]

Manufacturer	Model	Quantity
OMRON Corporation	EE-SX672	3

*Refer to page 156 for sensor specifications.

MEMO



Electric actuator Ball screw drive Slider

ETS-17 Series

Motor side mounting (left, right, bottom)

● Servo motor capacity: 400 W/750 W

How to order

ETS - 17 - 05 005 - R M 4 N N N N N - X

(A) (B) (C) (D) (E) (F) (G) (H) (I) (J) (K) (L)

(A) Body size

17	Body width 170 mm

(B) Screw lead

05	5 mm
10	10 mm
20	20 mm
40	40 mm

(C) Stroke length

005 to 125	100 mm (In 50 mm increments) 1250 mm

(D) Motor mounting direction *5

R	Right mounting
D	Bottom mounting
L	Left mounting

(E) Mounted motor specification

M	Select the mounted motor specification from the table below.
Y	
P	
F	

(F) Motor capacity

4	400 W
8	750 W

(G) Brake

N	None

(H) Origin sensor (1 pc) *1 *2 *3

N	None
A	Inside motor side
B	Inside motor opposite side
C	Outside motor side
D	Outside motor opposite side

(I) Limit sensor (2 pcs) *1 *2 *3

N	None
A	Inside
B	Outside

(J) Grease nipple *3 *4 *5

N	None (Body mounting direction: Standard)
R	Right
L	Left

(K) Positioning pin hole

N	None
P	Yes

(L) Metal stopper specifications (ETS-X)

	Standard
X	Yes

Manufacturer	400 W	750 W
Mitsubishi Electric Corporation	M	M
Delta Electronics Co., Ltd.	M	M
Sanyo Denki Co., Ltd.	M	-
YASKAWA Electric Corporation	Y	Y
Keyence Corporation	Y	Y
Panasonic Corporation	P	P
OMRON Corporation	P	P
Fuji Electric Co., Ltd.	M	M
FANUC CORPORATION	F	F
DENSO WAVE Incorporated (ETS-X only)	M	-
Bosch Rexroth AG	P	P
Rockwell Automation, Inc.	M	M
SIEMENS AG	M	M

*Refer to page 89 for the motor model No.

*1: Origin sensor and limit sensor are available as a set. As it is both-or-nothing, select "None" for both.
*2: For sensor inside mounting, the user cannot adjust the position. (Assembled at shipment)
For sensor outside mounting, the user can adjust the position. (Included at shipment)
*3: Contact CKD to use the origin sensor, limit sensor and grease nipple in the same direction.
*4: "Body mounting direction: Standard" here indicates that either top or bottom mounting is possible.
*5: When selecting motor mounting direction R, grease nipple R cannot be selected.
When selecting L, grease nipple L cannot be selected.

Specifications

Applicable motor capacity			400 W/750 W servo motor			
Drive method			Ball screw ø20			
Ball screw accuracy grade			C7			
Stroke length		mm	50 to 1250			
Screw lead		mm	5	10	20	40
Max. load capacity *1	Horizontal	400 W kg	120	110	75	35
		750 W kg	120	120	83	50
	Vertical	400 W kg	40	30	14	7
		750 W kg	50	40	25	10
Max. speed		mm/s	250	500	1000	2000
Rated thrust *1	400 W	N	1388	694	347	174
	750 W	N	2100	1050	525	260
Repeatability		mm	±0.01			
Lost motion			0.1 or less			
Dynamic allowable load		N	10102			
Static allowable moment		N·m	MP: 1034.0, MY: 1032.0, MR: 908.0			
Dynamic allowable moment		N·m	MP: 424.3, MY: 424.3, MR: 520.3			
Operating ambient temperature, humidity			0 to 40°C (no freezing) 35 to 80% RH (no condensation)			
Storage ambient temperature, humidity			-10 to 50°C (no freezing) 35 to 80% RH (no condensation)			
Atmosphere			No corrosive gas, explosive gas, or dust			

*1 Rated thrust and max. load capacity are guideline values assuming that the motor mounted will output the rated torque.

Stroke and max. speed

(mm/s)

Screw lead \ Stroke length	100 to 850	950	1050	1150	1250
5	250	225	200	175	150
10	500	450	400	350	300
20	1000	900	800	700	600
40	2000	1800	1600	1400	1200

*The max. speed is the speed when the motor mounted by the customer can output a rotation speed of 3000 rpm.

Allowable overhang length

*Refer to page 152 for details.

Moment direction

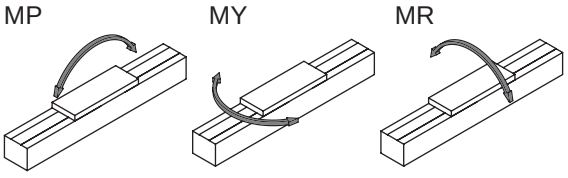

Dimensions Motor right-side mounting

● ETS-17-*****-R

· Refer to page 158 for grease nipple dimensions.

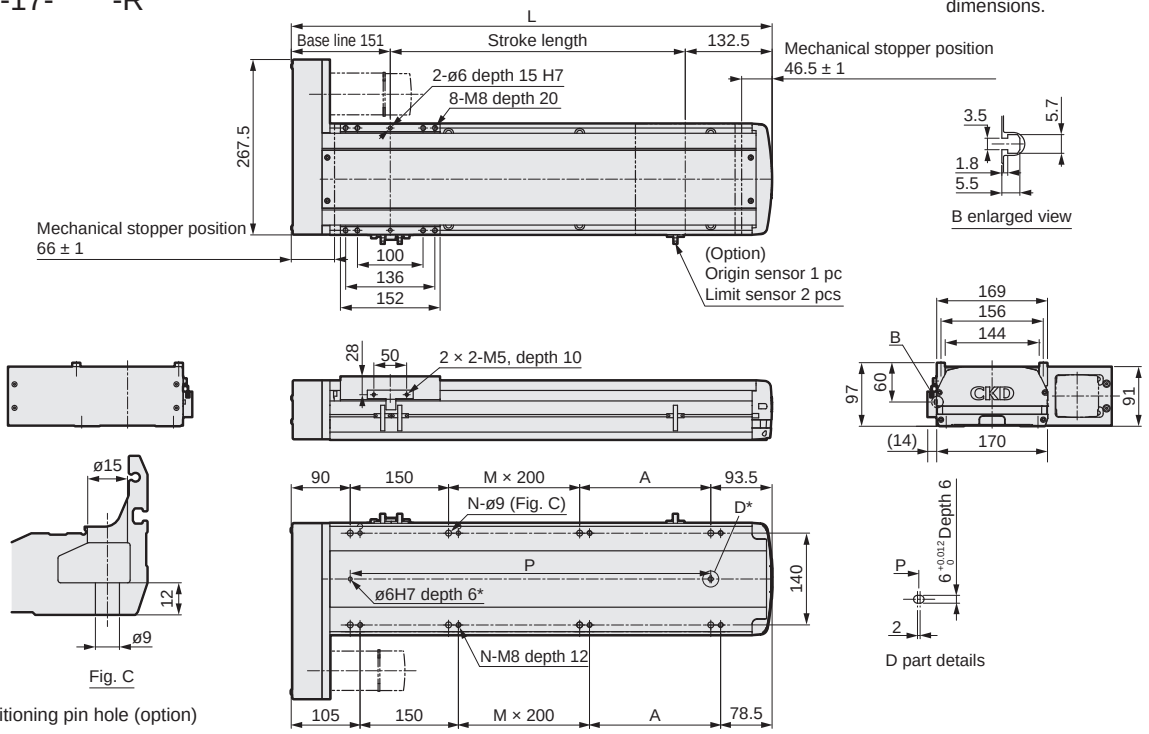

Stroke length (mm)	50	100	150	200	250	300	350	400	450	500	550	600	650	700	750	800	850	900	950	1000	1050	1100	1150	1200	1250
L	333.5	383.5	433.5	483.5	533.5	583.5	633.5	683.5	733.5	783.5	833.5	883.5	933.5	983.5	1033.5	1083.5	1133.5	1183.5	1233.5	1283.5	1333.5	1383.5	1433.5	1483.5	1533.5
A	0	50	100	150	200	50	100	150	200	50	100	150	200	50	100	150	200	50	100	150	200	50	100	150	200
M	0	0	0	0	0	1	1	1	1	2	2	2	2	3	3	3	3	4	4	4	4	5	5	5	5
N	4	6	6	6	6	8	8	8	8	10	10	10	10	12	12	12	12	14	14	14	14	16	16	16	16
P	150	200	250	300	350	400	450	500	550	600	650	700	750	800	850	900	950	1000	1050	1100	1150	1200	1250	1300	1350
Weight (kg)	10.8	11.6	12.4	13.2	14.0	14.7	15.5	16.3	17.1	17.8	18.6	19.4	20.2	20.9	21.7	22.5	23.3	24.0	24.8	25.6	26.4	27.2	28.0	28.8	29.6

Motor mounting part

● ETS-17-400W

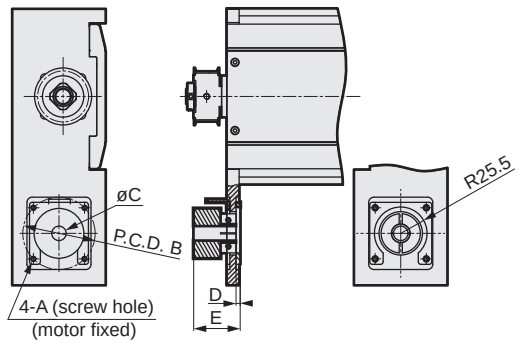

● ETS-17-750W

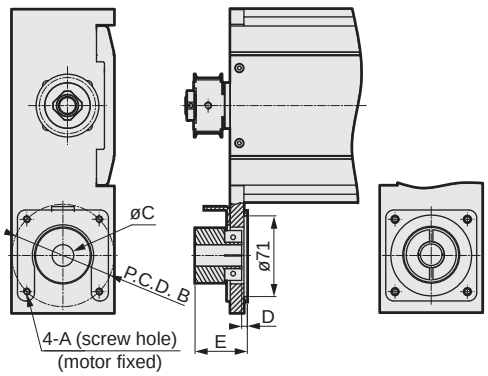

Mounted motor specification		A	B	C	D	E	Motor mounting bolt
M	400 W/750 W	M5/M6	ø70/ø90	ø14/ø19	4/5	45/46	4-M5 × L18/4-M6 × L24
Y	400 W/750 W	M5/M6	ø70/ø90	ø14/ø19	4/5	45/46	4-M5 × L18/4-M6 × L24
P	400 W/750 W	M4/M5	ø70/ø90	ø14/ø19	4/5	45/46	4-M4 × L18/4-M5 × L24
F	400 W/750 W	M5/M6	ø70/ø100	ø14/ø14	4/7	45/48	4-M5 × L18/4-M6 × L25

List of attachments

[Motor mounting parts]

Mounted motor specification	Timing belt/pulley	Motor capacity	Motor mounting bolt	
			Size	Quantity
M	Included at shipment	400 W/750 W	M5/M6	4
Y			M5/M6	4
P			M4/M5	4
F			M5/M6	4

[Origin sensor/Limit sensor]

Manufacturer	Model	Quantity
OMRON Corporation	EE-SX672	3

*Refer to page 156 for sensor specifications.

Dimensions Motor bottom mounting

● ETS-17-*****-D

· Refer to page 158 for grease nipple dimensions.

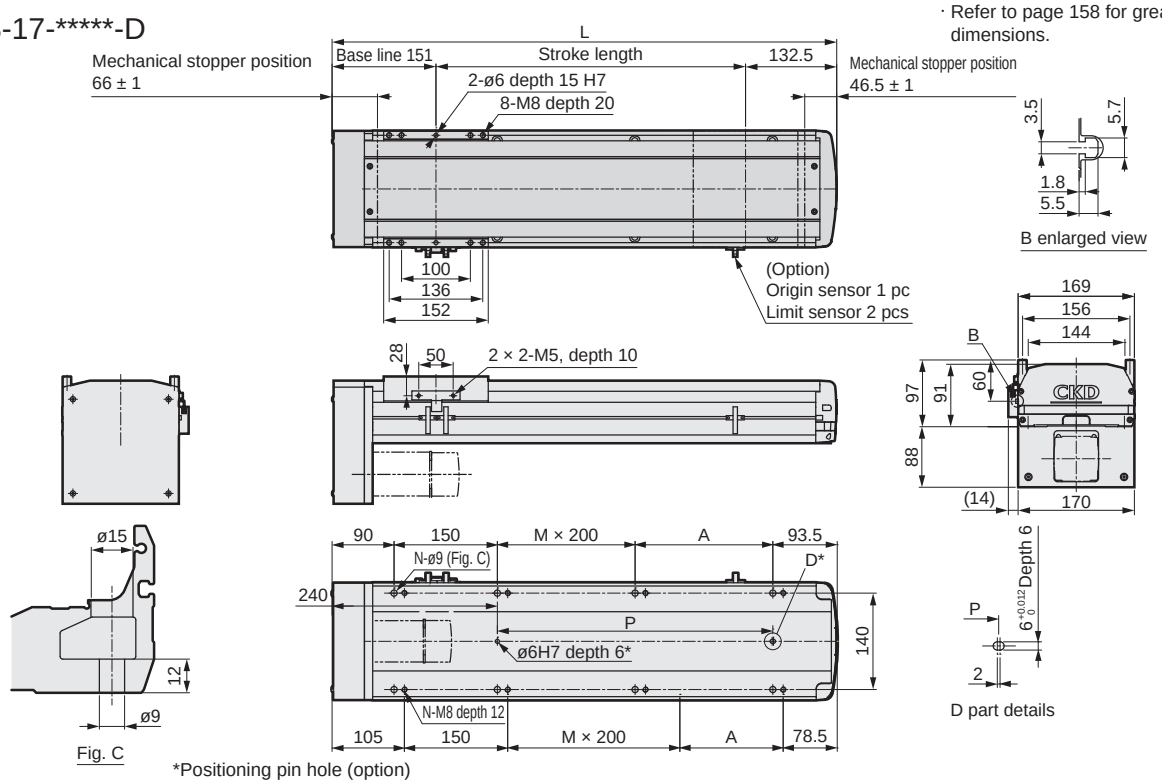

*Positioning pin hole (option)
Round positioning pin holes are available only for stroke 50

Stroke length (mm)	50	100	150	200	250	300	350	400	450	500	550	600	650	700	750	800	850	900	950	1000	1050	1100	1150	1200	1250
L	333.5	383.5	433.5	483.5	533.5	583.5	633.5	683.5	733.5	783.5	833.5	883.5	933.5	983.5	1033.5	1083.5	1133.5	1183.5	1233.5	1283.5	1333.5	1383.5	1433.5	1483.5	1533.5
A	0	50	100	150	200	50	100	150	200	50	100	150	200	50	100	150	200	50	100	150	200	50	100	150	200
M	0	0	0	0	0	1	1	1	1	2	2	2	2	3	3	3	3	4	4	4	4	5	5	5	5
N	4	6	6	6	6	8	8	8	8	10	10	10	10	12	12	12	12	14	14	14	14	16	16	16	16
P	0	50	100	150	200	250	300	350	400	450	500	550	600	650	700	750	800	850	900	950	1000	1050	1100	1150	1200
Weight (kg)	11.1	11.9	12.7	13.5	14.3	15.0	15.8	16.6	17.4	18.1	18.9	19.7	20.5	21.2	22.0	22.8	23.6	24.3	25.1	25.9	26.7	27.5	28.3	29.1	29.9

Motor mounting part

● ETS-17-400W

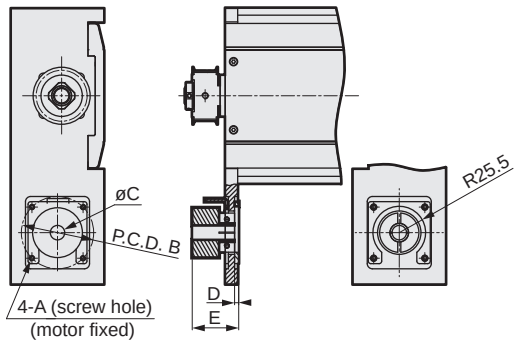

● ETS-17-750W

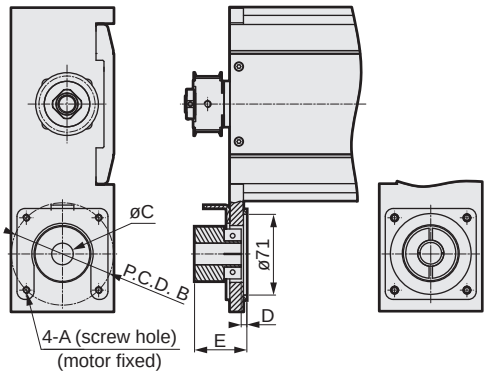

Mounted motor specification		A	B	C	D	E	Motor mounting bolt
M	400 W/750 W	M5/M6	ø70/ø90	ø14/ø19	4/5	45/46	4-M5 × L18/4-M6 × L24
Y	400 W/750 W	M5/M6	ø70/ø90	ø14/ø19	4/5	45/46	4-M5 × L18/4-M6 × L24
P	400 W/750 W	M4/M5	ø70/ø90	ø14/ø19	4/5	45/46	4-M4 × L18/4-M5 × L24
F	400 W/750 W	M5/M6	ø70/ø100	ø14/ø14	4/7	45/48	4-M5 × L18/4-M6 × L25

List of attachments

[Motor mounting parts]

Mounted motor specification	Timing belt/pulley	Motor capacity	Motor mounting bolt	
			Size	Quantity
M	Included at shipment	400 W/750 W	M5/M6	4
Y			M5/M6	4
P			M4/M5	4
F			M5/M6	4

[Origin sensor/Limit sensor]

Manufacturer	Model	Quantity
OMRON Corporation	EE-SX672	3

*Refer to page 156 for sensor specifications.

Dimensions Motor left-side mounting

● ETS-17-*****-L

· Refer to page 158 for grease nipple dimensions.

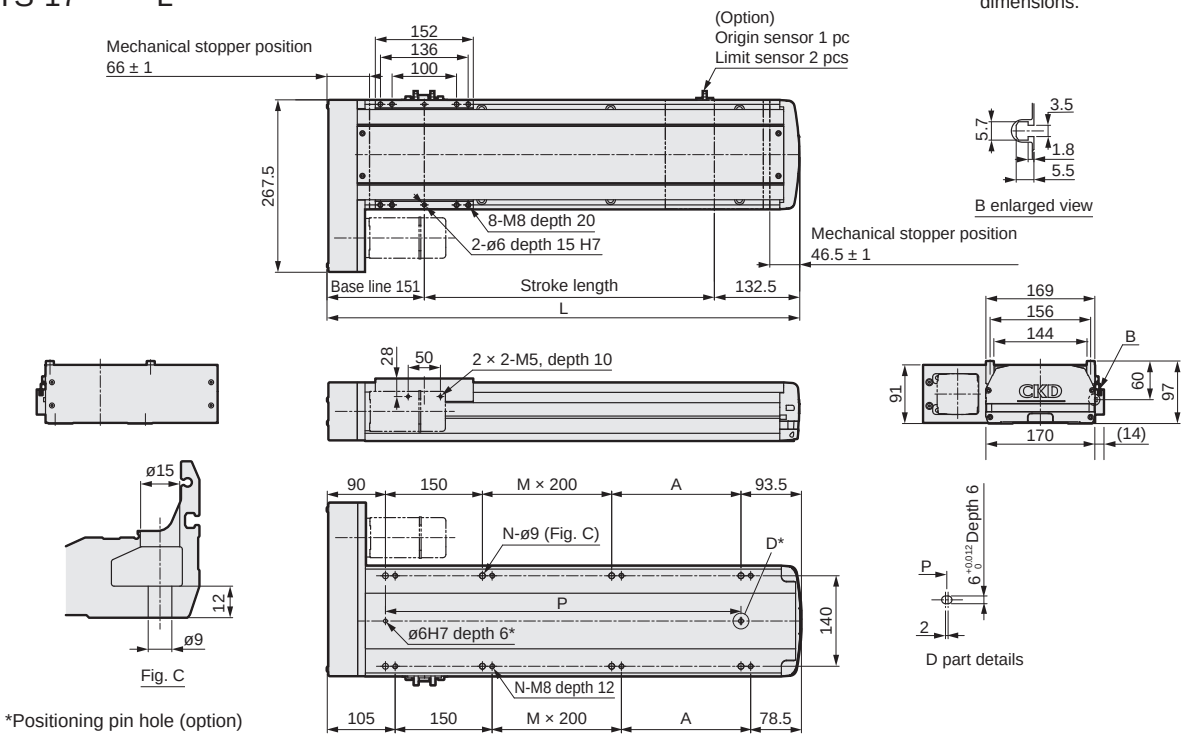

Stroke length (mm)	50	100	150	200	250	300	350	400	450	500	550	600	650	700	750	800	850	900	950	1000	1050	1100	1150	1200	1250
L	333.5	383.5	433.5	483.5	533.5	583.5	633.5	683.5	733.5	783.5	833.5	883.5	933.5	983.5	1033.5	1083.5	1133.5	1183.5	1233.5	1283.5	1333.5	1383.5	1433.5	1483.5	1533.5
A	0	50	100	150	200	50	100	150	200	50	100	150	200	50	100	150	200	50	100	150	200	50	100	150	200
M	0	0	0	0	0	1	1	1	1	2	2	2	2	3	3	3	3	4	4	4	4	5	5	5	5
N	4	6	6	6	6	8	8	8	8	10	10	10	10	12	12	12	12	14	14	14	14	16	16	16	16
P	150	200	250	300	350	400	450	500	550	600	650	700	750	800	850	900	950	1000	1050	1100	1150	1200	1250	1300	1350
Weight (kg)	10.8	11.6	12.4	13.2	14.0	14.7	15.5	16.3	17.1	17.8	18.6	19.4	20.2	20.9	21.7	22.5	23.3	24.0	24.8	25.6	26.4	27.2	28.0	28.8	29.6

Motor mounting part

● ETS-17-400W

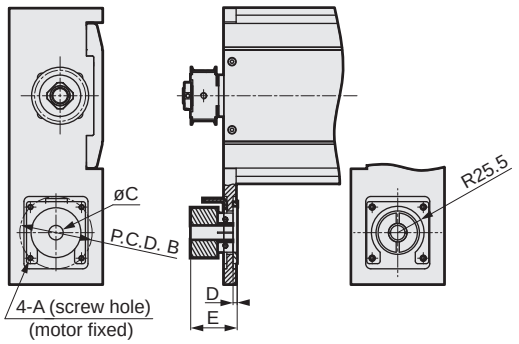

● ETS-17-750W

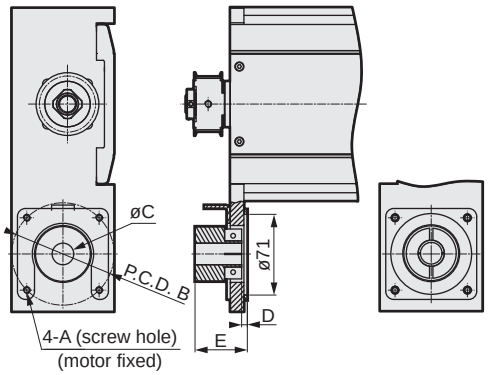

Mounted motor specification		A	B	C	D	E	Motor mounting bolt
M	400 W/750 W	M5/M6	ø70/ø90	ø14/ø19	4/5	45/46	4-M5 × L18/4-M6 × L24
Y	400 W/750 W	M5/M6	ø70/ø90	ø14/ø19	4/5	45/46	4-M5 × L18/4-M6 × L24
P	400 W/750 W	M4/M5	ø70/ø90	ø14/ø19	4/5	45/46	4-M4 × L18/4-M5 × L24
F	400 W/750 W	M5/M6	ø70/ø100	ø14/ø14	4/7	45/48	4-M5 × L18/4-M6 × L25

List of attachments

[Motor mounting parts]

Mounted motor specification	Timing belt/pulley	Motor capacity	Motor mounting bolt	
			Size	Quantity
M	Included at shipment	400 W/750 W	M5/M6	4
Y			M5/M6	4
P			M4/M5	4
F			M5/M6	4

[Origin sensor/Limit sensor]

Manufacturer	Model	Quantity
OMRON Corporation	EE-SX672	3

*Refer to page 156 for sensor specifications.



Electric actuator Ball screw drive Slider

ETS-22 Series

Straight motor mounting, built-in mounting

● Servo motor capacity: 750 W

How to order

ETS - 22 - 05 - 005 - E M 8 N N N N N - X

(A) (B) (C) (D) (E) (F) (G) (H) (I) (J) (K) (L)

(A) Body size

22	Body width 220 mm

(B) Screw lead

05	5 mm
10	10 mm
25	25 mm
40	40 mm

(C) Stroke length

005 to 150	100 mm (In 50 mm increments) 1500 mm

(D) Motor mounting direction *1 *2

E	Straight mounting
B	Built-in mounting

(E) Mounted motor specification

M	Select the mounted motor specification from the table below.
Y	
P	
F	

(F) Motor capacity

8	750 W

(G) Brake *2

N	None
B	Yes

(H) Origin sensor (1 pc) *3 *4 *5

N	None
A	Inside motor side
B	Inside motor opposite side
C	Outside motor side
D	Outside motor opposite side

(I) Limit sensor (2 pcs) *3 *4 *5

N	None
A	Inside
B	Outside

(J) Grease nipple *5 *6

N	None (Body mounting direction: Standard)
R	Right
L	Left

(K) Positioning pin hole

N	None
P	Yes

(L) Metal stopper specifications (ETS-X) *1

	Standard
X	Yes

Manufacturer	750 W
Mitsubishi Electric Corporation	M
Delta Electronics Co., Ltd.	M
Sanyo Denki Co., Ltd.	-
YASKAWA Electric Corporation	Y
Keyence Corporation	Y
Panasonic Corporation	P
OMRON Corporation	P
Fuji Electric Co., Ltd.	M
FANUC CORPORATION	F
DENSO WAVE Incorporated (ETS-X only)	-
Bosch Rexroth AG	P
Rockwell Automation, Inc.	M
SIEMENS AG	M

*Refer to page 89 for the motor model No.

*1: Built-in mounting cannot be selected with metal stopper specifications.
*2: "Yes" to the Brake can be selected only when the motor mounting direction is built-in mounting.
*3: Origin sensor and limit sensor are available as a set. As it is both-or-nothing, select "None" for both.
*4: For sensor inside mounting, the user cannot adjust the position. (Assembled at shipment)
For sensor outside mounting, the user can adjust the position. (Included at shipment)
*5: Contact CKD to use the origin sensor, limit sensor and grease nipple in the same direction.
*6: "Body mounting direction: Standard" here indicates that either top or bottom mounting is possible.

Specifications

Applicable motor capacity		750 W servo motor			
Drive method		Ball screw ø25			ø20
Ball screw accuracy grade		C7			
Stroke length	mm	50 to 1500			
Screw lead	mm	5	10	25	40
Max. load capacity *1	Horizontal kg	150	150	120	60
	Vertical kg	55	45	20	10
Max. speed	mm/s	250	500	1250	2000
Rated thrust *1	N	2100	1050	420	260
Repeatability	mm	±0.01			
Lost motion	mm	0.1 or less			
Dynamic allowable load	N	14174			
Static allowable moment	N·m	MP: 2052.0, MY: 2052.0, MR: 1810.0			
Dynamic allowable moment	N·m	MP: 1098.5, MY: 1098.5, MR: 999.3			
Operating ambient temperature, humidity		0 to 40°C (no freezing) 35 to 80% RH (no condensation)			
Storage ambient temperature, humidity		-10 to 50°C (no freezing) 35 to 80% RH (no condensation)			
Atmosphere		No corrosive gas, explosive gas, or dust			

*1 Rated thrust and max. load capacity are guideline values assuming that the motor mounted will output the rated torque.

Stroke and max. speed

(mm/s)

Screw lead \ Stroke length	100 to 900	1000	1100	1200	1300	1400	1500
5	250	225	200	175	150	125	100
10	500	450	400	350	300	250	200
25	1250	1125	1000	875	750	625	500

Screw lead \ Stroke length	100 to 850	950	1050	1150	1250	1350	1450	1500
40	2000	1800	1600	1400	1200	1000	800	600

*The max. speed is the speed when the motor mounted by the customer can output a rotation speed of 3000 rpm.

Allowable overhang length

*Refer to page 152 for details.

Moment direction

MP MY MR

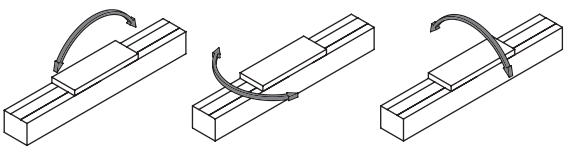

Dimensions Straight motor mounting

● ETS-22-*****-E

· Refer to page 158 for grease nipple dimensions.

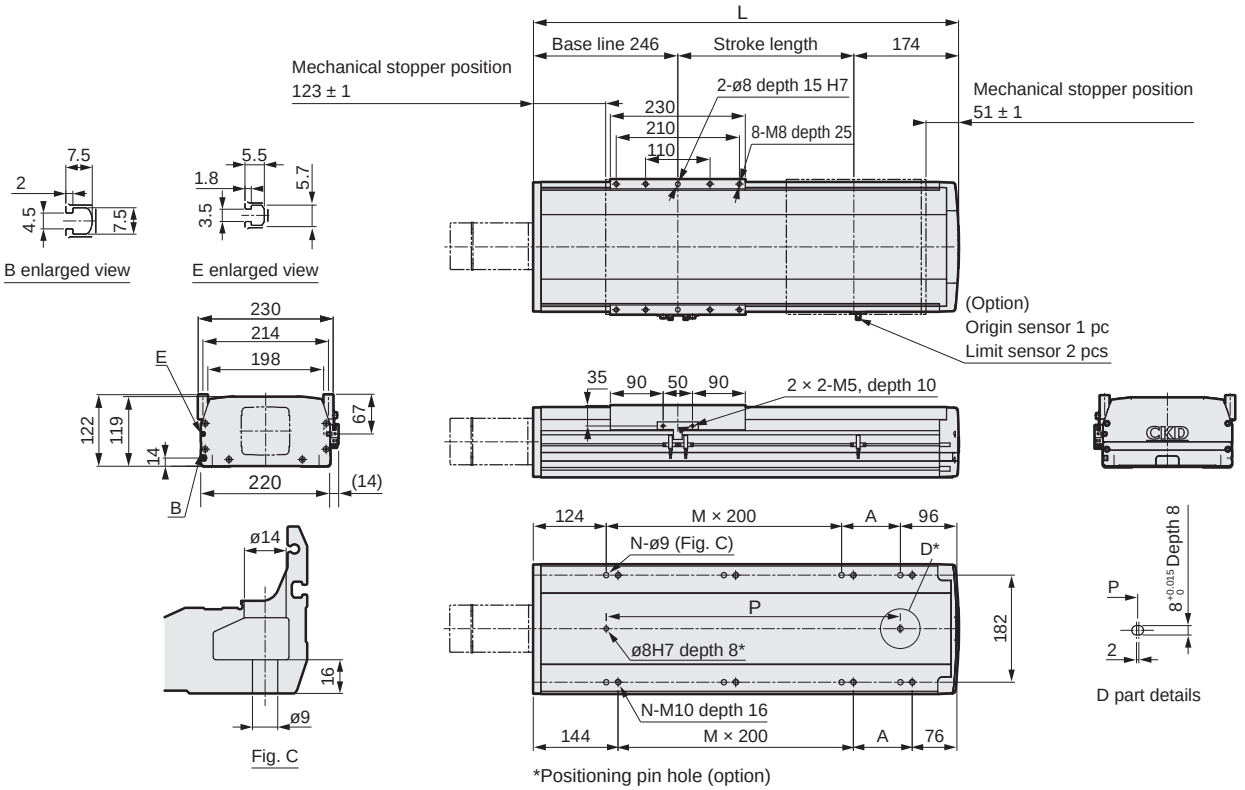

Stroke length (mm)	50	100	150	200	250	300	350	400	450	500	550	600	650	700	750	800	850	900	950	1000	1050	1100	1150	1200	1250	1300	1350	1400	1450	1500
L	470	520	570	620	670	720	770	820	870	920	970	1020	1070	1120	1170	1220	1270	1320	1370	1420	1470	1520	1570	1620	1670	1720	1770	1820	1870	1920
A	50	100	150	200	50	100	150	200	50	100	150	200	50	100	150	200	50	100	150	200	50	100	150	200	50	100	150	200	50	100
M	1	1	1	1	2	2	2	2	3	3	3	3	4	4	4	4	5	5	5	5	6	6	6	6	7	7	7	7	8	8
N	6	6	6	6	8	8	8	8	10	10	10	10	12	12	12	12	14	14	14	14	16	16	16	16	18	18	18	18	20	20
P	250	300	350	400	450	500	550	600	650	700	750	800	850	900	950	1000	1050	1100	1150	1200	1250	1300	1350	1400	1450	1500	1550	1600	1650	1700
Weight (kg)	20.0	21.2	22.4	23.7	24.9	26.1	27.3	28.5	29.8	31.0	32.2	33.4	34.6	35.9	37.1	38.3	39.5	40.7	42	43.2	44.4	45.6	46.8	48.1	49.3	50.5	51.7	52.9	54.1	55.3

Motor mounting part

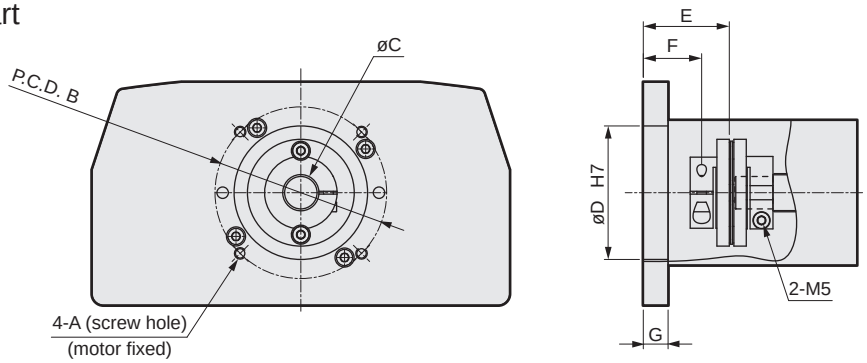

Mounted motor specification		A	B	C	D	E	F	G	Motor mounting bolt
M	750 W	M6	ø90	ø19	70	45.1	30.6	13	4-M6 × L16
Y	750 W	M6	ø90	ø19	70	45.1	30.6	13	4-M6 × L16
P	750 W	M5	ø90	ø19	70	45.1	30.6	13	4-M5 × L16
F	750 W	M6	ø100	ø14	80	28.7	14.2	5	4-M6 × L16

List of attachments

[Motor mounting parts]

Mounted motor specification	Coupling	Motor capacity	Motor mounting bolt	
			Size	Quantity
M	Assembled at shipment	750 W	M6	4
Y			M6	4
P			M5	4
F			M6	4

[Origin sensor/Limit sensor]

Manufacturer	Model	Quantity
OMRON Corporation	EE-SX672	3

*Refer to page 156 for sensor specifications.

Dimensions Motor built-in mounting

● ETS-22-*****-B

· Refer to page 158 for grease nipple dimensions.

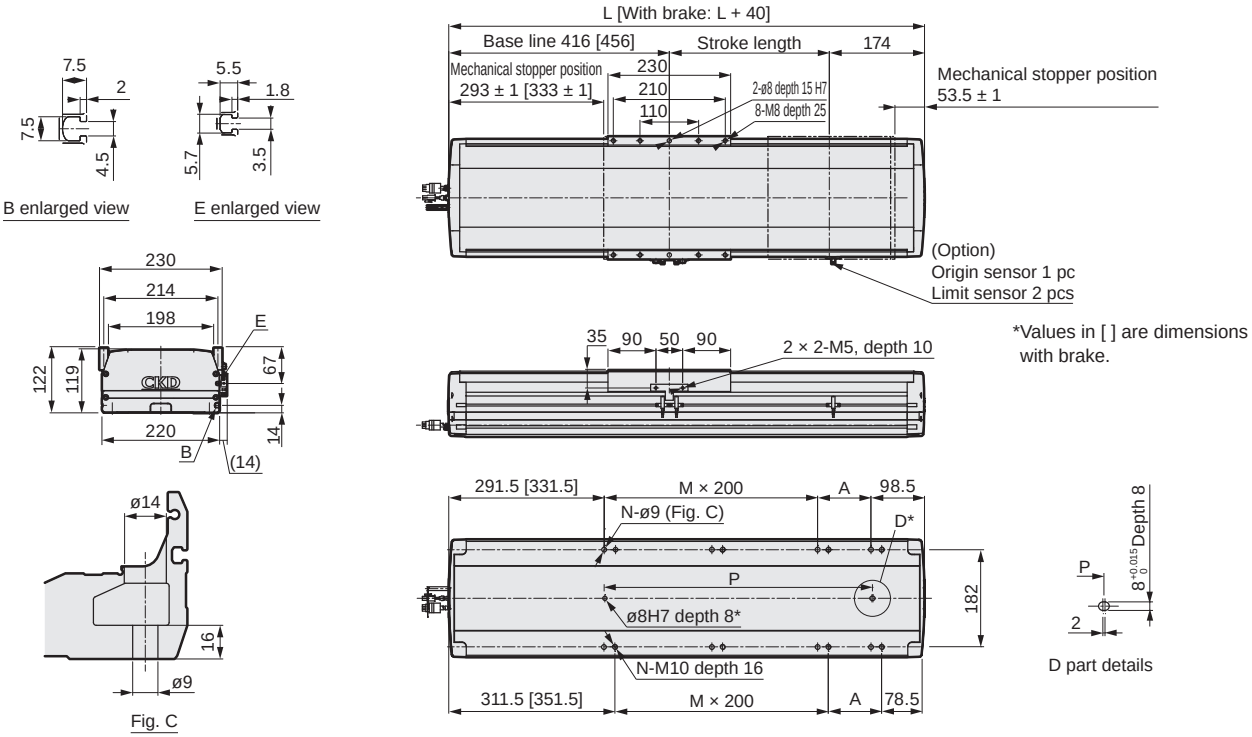

*Values in [ ] are dimensions with brake.

Stroke length (mm)	50	100	150	200	250	300	350	400	450	500	550	600	650	700	750	800	850	900	950	1000	1050	1100	1150	1200	1250	1300	1350	1400	1450	1500
L	640	690	740	790	840	890	940	990	1040	1090	1140	1190	1240	1290	1340	1390	1440	1490	1540	1590	1640	1690	1740	1790	1840	1890	1940	1990	2040	2090
A	50	100	150	200	50	100	150	200	50	100	150	200	50	100	150	200	50	100	150	200	50	100	150	200	50	100	150	200	50	100
M	1	1	1	1	2	2	2	2	3	3	3	3	4	4	4	4	5	5	5	5	6	6	6	6	7	7	7	7	8	8
N	6	6	6	6	8	8	8	8	10	10	10	10	12	12	12	12	14	14	14	14	16	16	16	16	18	18	18	18	20	20
P	250	300	350	400	450	500	550	600	650	700	750	800	850	900	950	1000	1050	1100	1150	1200	1250	1300	1350	1400	1450	1500	1550	1600	1650	1700
Weight (kg) Without brake	26.1	28.1	30.2	32.2	34.2	36.3	38.3	40.4	42.4	44.4	46.5	48.5	50.6	52.6	54.6	56.7	58.7	60.7	62.8	64.8	66.9	68.9	70.9	73.0	75.0	77.1	79.1	81.1	83.2	85.2
Weight (kg) With brake	27.4	29.4	31.4	33.4	35.5	37.5	39.5	41.6	43.6	45.7	47.7	49.7	51.8	53.8	55.9	57.9	59.9	62.0	64.0	66.0	68.1	70.1	72.2	74.2	76.2	78.3	80.3	82.4	84.4	86.4

Motor mounting part

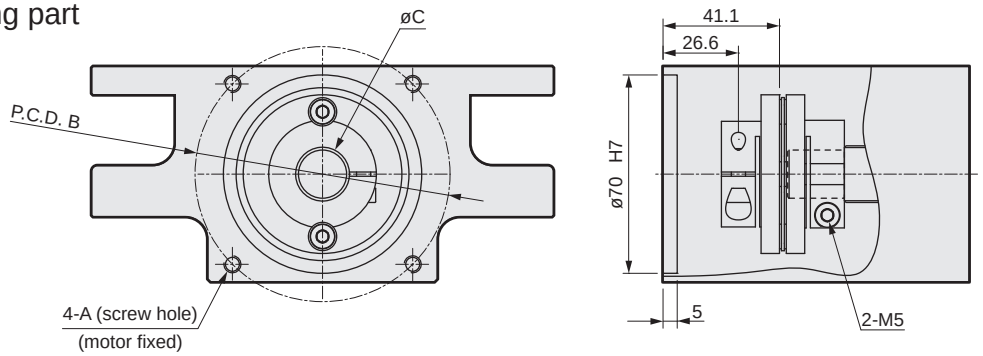

Mounted motor specification		A	B	C	Motor mounting bolt
M	750 W	M6	ø90	ø19	4-M6 × L16
Y	750 W	M6	ø90	ø19	4-M6 × L16
P	750 W	M5	ø90	ø19	4-M5 × L16

List of attachments

[Motor mounting parts]

Mounted motor specification	Coupling	Motor capacity	Motor mounting bolt	
			Size	Quantity
M	Assembled at shipment	750 W	M6	4
Y			M6	4
P			M5	4

[Origin sensor/Limit sensor]

Manufacturer	Model	Quantity
OMRON Corporation	EE-SX672	3

*Refer to page 156 for sensor specifications.

MEMO



Electric actuator Ball screw drive Slider

ETS-22 Series

Motor side mounting (left, right, bottom)

● Servo motor capacity: 750 W

How to order

ETS - 22 - 05 - 005 - R M 8 N N N N N - X

(A) (B) (C) (D) (E) (F) (G) (H) (I) (J) (K) (L)

(A) Body size

22	Body width 220 mm

(B) Screw lead

05	5 mm
10	10 mm
25	25 mm
40	40 mm

(C) Stroke length

005 to 150	100 mm (In 50 mm increments) 1500 mm

(D) Motor mounting direction *5

R	Right mounting
D	Bottom mounting
L	Left mounting

(E) Mounted motor specification

M Y P F	Select the mounted motor specification from the table below.

(F) Motor capacity

8	750 W

(G) Brake

N	None

(H) Origin sensor (1 pc) *1 *2 *3

N	None
A	Inside motor side
B	Inside motor opposite side
C	Outside motor side
D	Outside motor opposite side

(I) Limit sensor (2 pcs) *1 *2 *3

N	None
A	Inside
B	Outside

(J) Grease nipple *3 *4 *5

N	None (Body mounting direction: Standard)
R	Right
L	Left

(K) Positioning pin hole

N	None
P	Yes

(L) Metal stopper specifications (ETS-X)

	Standard
X	Yes

*1: Origin sensor and limit sensor are available as a set. As it is both-or-nothing, select "None" for both.
*2: For sensor inside mounting, the user cannot adjust the position. (Assembled at shipment)
For sensor outside mounting, the user can adjust the position. (Included at shipment)
*3: Contact CKD to use the origin sensor, limit sensor and grease nipple in the same direction.
*4: "Body mounting direction: Standard" here indicates that either top or bottom mounting is possible.
*5: When selecting motor mounting direction R, grease nipple R cannot be selected.
When selecting L, grease nipple L cannot be selected.

Manufacturer	750 W
Mitsubishi Electric Corporation	M
Delta Electronics Co., Ltd.	M
Sanyo Denki Co., Ltd.	-
YASKAWA Electric Corporation	Y
Keyence Corporation	Y
Panasonic Corporation	P
OMRON Corporation	P
Fuji Electric Co., Ltd.	M
FANUC CORPORATION	F
DENSO WAVE Incorporated (ETS-X only)	-
Bosch Rexroth AG	P
Rockwell Automation, Inc.	M
SIEMENS AG	M

*Refer to page 89 for the motor model No.

Specifications

Applicable motor capacity		750 W servo motor			
Drive method		Ball screw ø25			ø20
Ball screw accuracy grade		C7			
Stroke length	mm	50 to 1500			
Screw lead	mm	5	10	25	40
Max. load capacity *1	Horizontal kg	150	150	120	60
	Vertical kg	55	45	20	10
Max. speed	mm/s	250	500	1250	2000
Rated thrust *1	N	2100	1050	420	260
Repeatability	mm	±0.01			
Lost motion	mm	0.1 or less			
Dynamic allowable load	N	14174			
Static allowable moment	N·m	MP: 2052.0, MY: 2052.0, MR: 1810.0			
Dynamic allowable moment	N·m	MP: 1098.5, MY: 1098.5, MR: 999.3			
Operating ambient temperature, humidity		0 to 40°C (no freezing) 35 to 80% RH (no condensation)			
Storage ambient temperature, humidity		-10 to 50°C (no freezing) 35 to 80% RH (no condensation)			
Atmosphere		No corrosive gas, explosive gas, or dust			

*1 Rated thrust and max. load capacity are guideline values assuming that the motor mounted will output the rated torque.

Stroke and max. speed

(mm/s)

Screw lead \ Stroke length	100 to 900	1000	1100	1200	1300	1400	1500
5	250	225	200	175	150	125	100
10	500	450	400	350	300	250	200
25	1250	1125	1000	875	750	625	500

Screw lead \ Stroke length	100 to 850	950	1050	1150	1250	1350	1450	1500
40	2000	1800	1600	1400	1200	1000	800	600

*The max. speed is the speed when the motor mounted by the customer can output a rotation speed of 3000 rpm.

Allowable overhang length

*Refer to page 152 for details.

Moment direction

MP MY MR

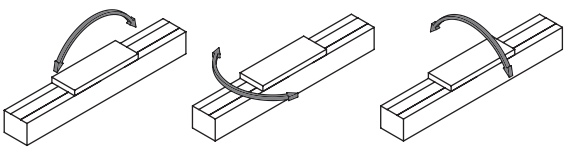

Dimensions Motor right-side mounting

● ETS-22-*****-R

· Refer to page 158 for grease nipple dimensions.

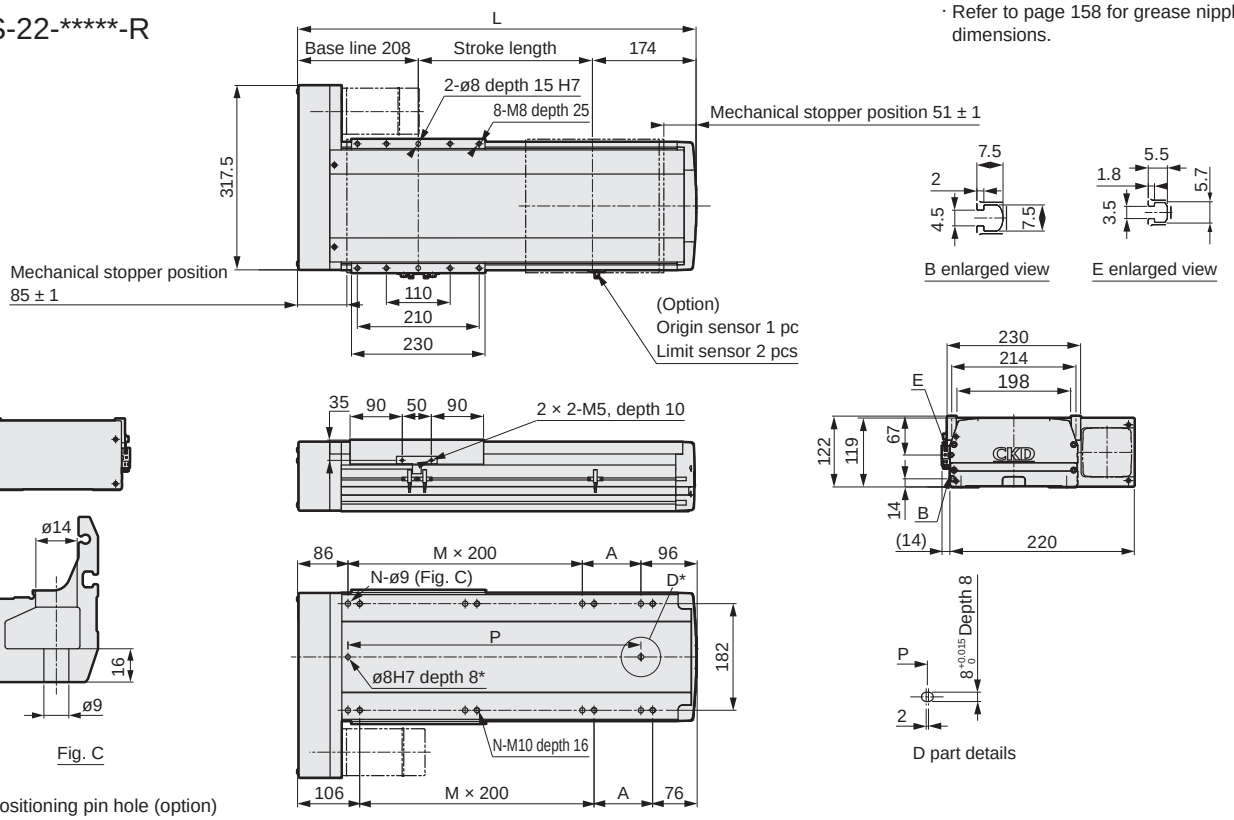

*Positioning pin hole (option)

Stroke length (mm)	50	100	150	200	250	300	350	400	450	500	550	600	650	700	750	800	850	900	950	1000	1050	1100	1150	1200	1250	1300	1350	1400	1450	1500
L	432	482	532	582	632	682	732	782	832	882	932	982	1032	1082	1132	1182	1232	1282	1332	1382	1432	1482	1532	1582	1632	1682	1732	1782	1832	1882
A	50	100	150	200	50	100	150	200	50	100	150	200	50	100	150	200	50	100	150	200	50	100	150	200	50	100	150	200	50	100
M	1	1	1	1	2	2	2	2	3	3	3	3	4	4	4	4	5	5	5	5	6	6	6	6	7	7	7	7	8	8
N	6	6	6	6	8	8	8	8	10	10	10	10	12	12	12	12	14	14	14	14	16	16	16	16	18	18	18	18	20	20
P	250	300	350	400	450	500	550	600	650	700	750	800	850	900	950	1000	1050	1100	1150	1200	1250	1300	1350	1400	1450	1500	1550	1600	1650	1700
Weight (kg)	22.5	23.7	24.9	26.2	27.4	28.6	29.8	31.0	32.3	33.5	34.7	35.9	37.1	38.4	39.6	40.8	42.0	43.2	44.5	45.7	46.9	48.1	49.3	50.6	51.8	53.0	54.2	55.4	56.6	57.8

Motor mounting part

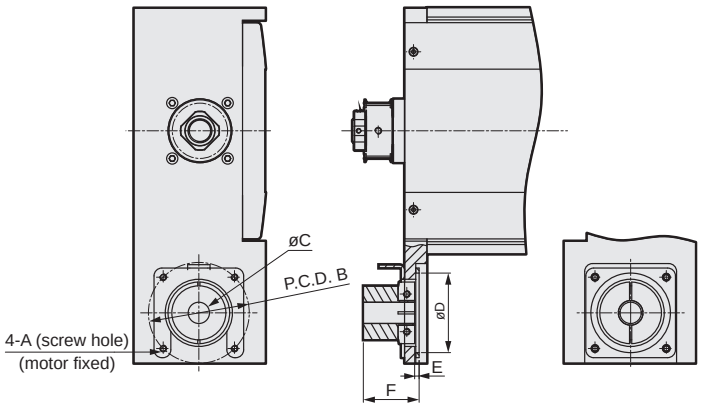

Mounted motor specification		A	B	C	D	E	F	Motor mounting bolt
M	750 W	M6	ø90	ø19	ø71	4	49.8	4-M6 × L16
Y	750 W	M6	ø90	ø19	ø71	4	49.8	4-M6 × L16
P	750 W	M5	ø90	ø19	ø71	4	49.8	4-M5 × L16
F	750 W	M6	ø100	ø14	ø81	8	53.8	4-M6 × L25

List of attachments

[Motor mounting parts]

Mounted motor specification	Timing belt/pulley	Motor capacity	Motor mounting bolt	
			Size	Quantity
M	Included at shipment	750 W	M6	4
Y			M6	4
P			M5	4
F			M6	4

[Origin sensor/Limit sensor]

Manufacturer	Model	Quantity
OMRON Corporation	EE-SX672	3

*Refer to page 156 for sensor specifications.

Dimensions Motor bottom mounting

● ETS-22-*****-D

· Refer to page 158 for grease nipple dimensions.

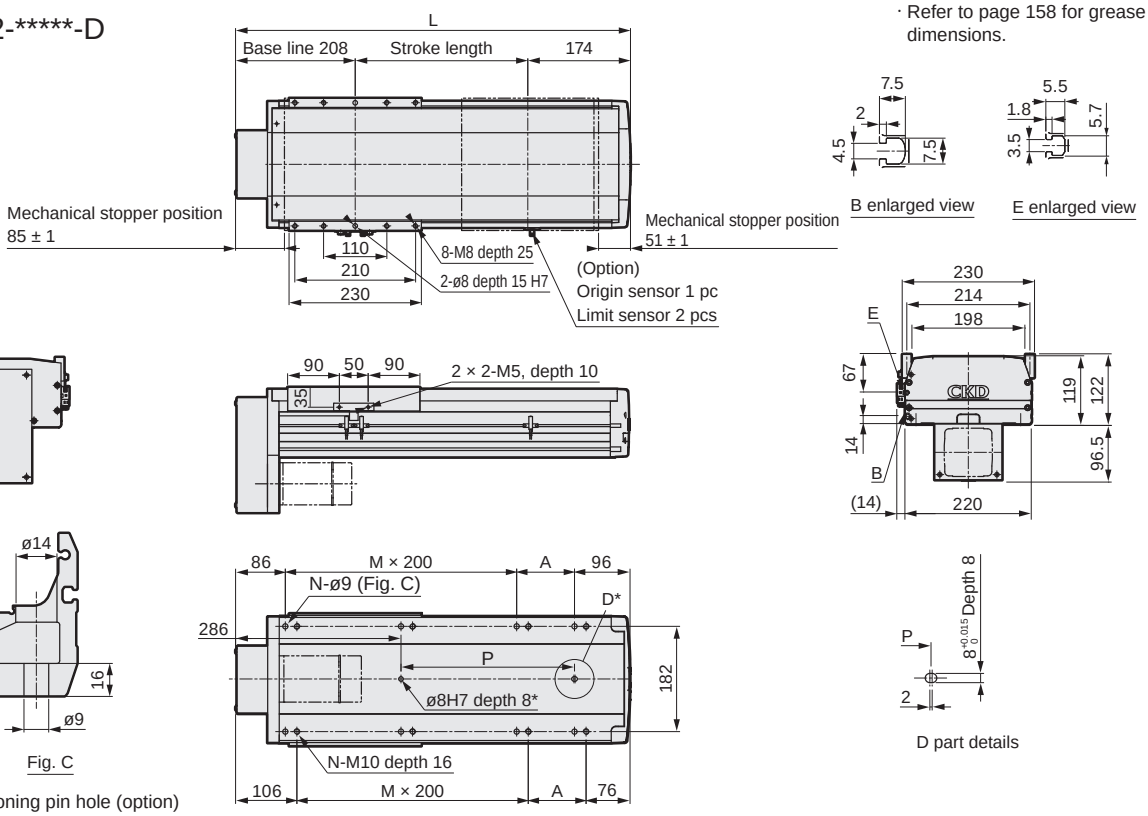

Stroke length (mm)	50	100	150	200	250	300	350	400	450	500	550	600	650	700	750	800	850	900	950	1000	1050	1100	1150	1200	1250	1300	1350	1400	1450	1500
L	432	482	532	582	632	682	732	782	832	882	932	982	1032	1082	1132	1182	1232	1282	1332	1382	1432	1482	1532	1582	1632	1682	1732	1782	1832	1882
A	50	100	150	200	50	100	150	200	50	100	150	200	50	100	150	200	50	100	150	200	50	100	150	200	50	100	150	200	50	100
M	1	1	1	1	2	2	2	2	3	3	3	3	4	4	4	4	5	5	5	5	6	6	6	6	7	7	7	7	8	8
N	6	6	6	6	8	8	8	8	10	10	10	10	12	12	12	12	14	14	14	14	16	16	16	16	18	18	18	18	20	20
P	50	100	150	200	250	300	350	400	450	500	550	600	650	700	750	800	850	900	950	1000	1050	1100	1150	1200	1250	1300	1350	1400	1450	1500
Weight (kg)	22.4	23.6	24.8	26.1	27.3	28.5	29.7	30.9	32.2	33.4	34.6	35.8	37.0	38.3	39.5	40.7	41.9	43.1	44.4	45.6	46.8	48.0	49.2	50.5	51.7	52.9	54.1	55.3	56.5	57.7

Motor mounting part

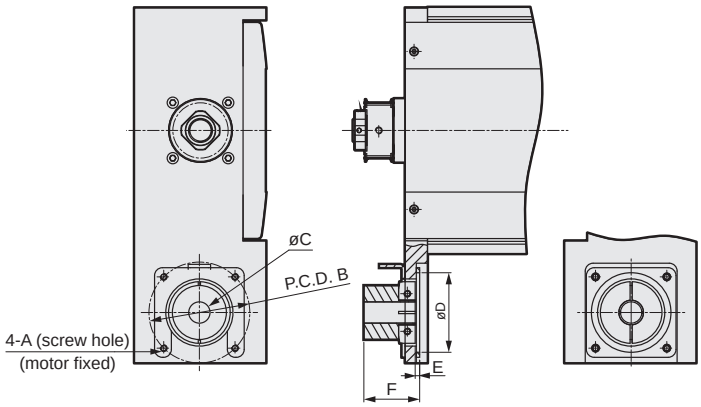

Mounted motor specification		A	B	C	D	E	F	Motor mounting bolt
M	750 W	M6	ø90	ø19	ø71	4	49.8	4-M6 × L16
Y	750 W	M6	ø90	ø19	ø71	4	49.8	4-M6 × L16
P	750 W	M5	ø90	ø19	ø71	4	49.8	4-M5 × L16
F	750 W	M6	ø100	ø14	ø81	8	53.8	4-M6 × L25

List of attachments

[Motor mounting parts]

Mounted motor specification	Timing belt/pulley	Motor capacity	Motor mounting bolt	
			Size	Quantity
M	Included at shipment	750 W	M6	4
Y			M6	4
P			M5	4
F			M6	4

[Origin sensor/Limit sensor]

Manufacturer	Model	Quantity
OMRON Corporation	EE-SX672	3

*Refer to page 156 for sensor specifications.

Dimensions Motor left-side mounting

● ETS-22-*****-L

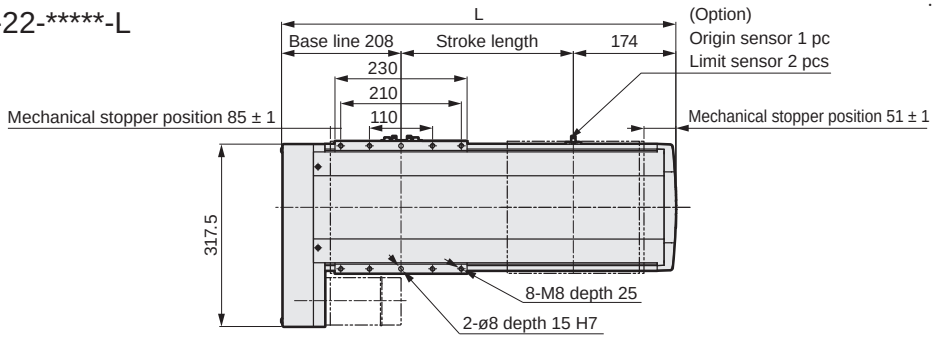

· Refer to page 158 for grease nipple dimensions.

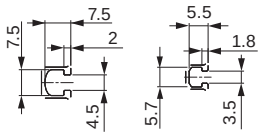

B enlarged view　　E enlarged view



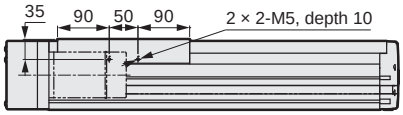

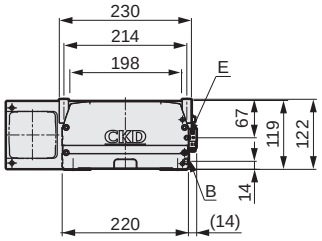

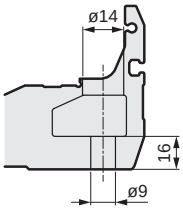

Fig. C

*Positioning pin hole (option)

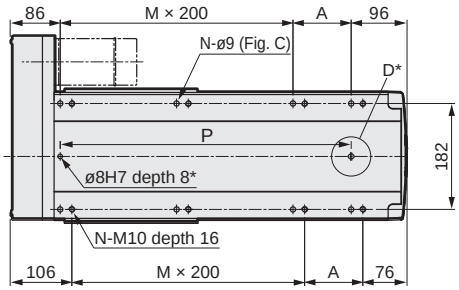

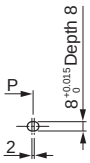

D part details

Stroke length (mm)	50	100	150	200	250	300	350	400	450	500	550	600	650	700	750	800	850	900	950	1000	1050	1100	1150	1200	1250	1300	1350	1400	1450	1500
L	432	482	532	582	632	682	732	782	832	882	932	982	1032	1082	1132	1182	1232	1282	1332	1382	1432	1482	1532	1582	1632	1682	1732	1782	1832	1882
A	50	100	150	200	50	100	150	200	50	100	150	200	50	100	150	200	50	100	150	200	50	100	150	200	50	100	150	200	50	100
M	1	1	1	1	2	2	2	2	3	3	3	3	4	4	4	4	5	5	5	5	6	6	6	6	7	7	7	7	8	8
N	6	6	6	6	8	8	8	8	10	10	10	10	12	12	12	12	14	14	14	14	16	16	16	16	18	18	18	18	20	20
P	250	300	350	400	450	500	550	600	650	700	750	800	850	900	950	1000	1050	1100	1150	1200	1250	1300	1350	1400	1450	1500	1550	1600	1650	1700
Weight (kg)	22.5	23.7	24.9	26.2	27.4	28.6	29.8	31.0	32.3	33.5	34.7	35.9	37.1	38.4	39.6	40.8	42.0	43.2	44.5	45.7	46.9	48.1	49.3	50.6	51.8	53.0	54.2	55.4	56.6	57.8

Motor mounting part

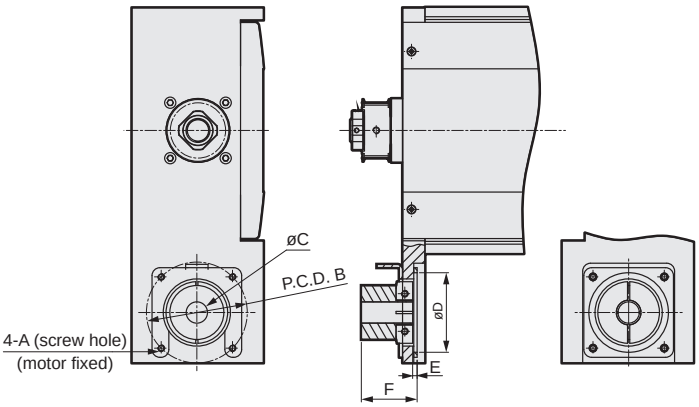

Mounted motor specification		A	B	C	D	E	F	Motor mounting bolt
M	750 W	M6	ø90	ø19	ø71	4	49.8	4-M6 × L16
Y	750 W	M6	ø90	ø19	ø71	4	49.8	4-M6 × L16
P	750 W	M5	ø90	ø19	ø71	4	49.8	4-M5 × L16
F	750 W	M6	ø100	ø14	ø81	8	53.8	4-M6 × L25

List of attachments

[Motor mounting parts]

Mounted motor specification	Timing belt/pulley	Motor capacity	Motor mounting bolt	
			Size	Quantity
M	Included at shipment	750 W	M6	4
Y			M6	4
P			M5	4
F			M6	4

[Origin sensor/Limit sensor]

Manufacturer	Model	Quantity
OMRON Corporation	EE-SX672	3

*Refer to page 156 for sensor specifications.

Model selection

STEP 1 Confirming load capacity

Load capacity varies with mounting orientation and screw lead.
Refer to the selection table (page 86) and the specification table for each model to select the size and screw lead.

STEP 2 Confirming positioning time

Calculate the positioning time of the selected product according to the following example and confirm that the required tact is achievable.
Select the speed and acceleration/deceleration from the specification table for each model and the motor selected by the customer.

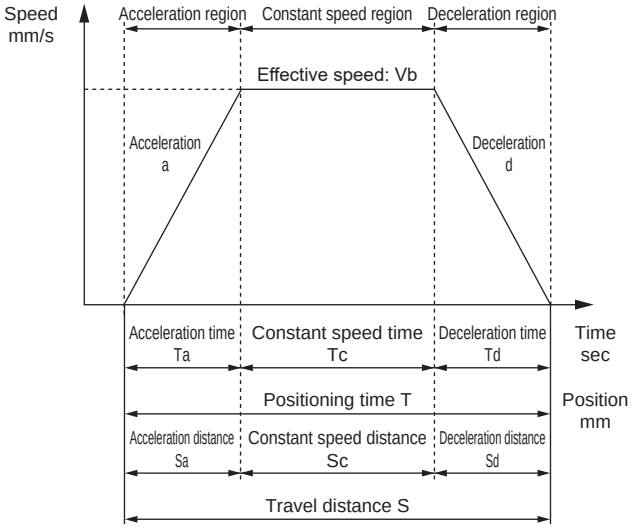

	Description	Code	Unit	Remarks
Set value	Set speed	V	mm/s	
	Set acceleration	a	mm/s^2	
	Set deceleration	d	mm/s^2	
	Travel distance	S	mm	
Calculated value	Achieved speed	Vmax	mm/s	$= \{2 \times a \times d \times S/(a + d)\}^{1/2}$
	Effective speed	Vb	mm/s	Smaller of V and Vmax
	Acceleration time	Ta	s	= Vb/a [0.2 sec or more]
	Deceleration time	Td	s	= Vb/d [0.2 sec or more]
	Constant speed time	Tc	s	= Sc/Vb
	Acceleration distance	Sa	mm	$= (a \times Ta^2)/2$
	Deceleration distance	Sd	mm	$= (d \times Td^2)/2$
	Constant speed distance	Sc	mm	= S - (Sa + Sd)
	Positioning time	T	s	= Ta + Tc + Td

*Do not use at speeds that exceed the specifications.
*Acceleration/deceleration setting by acceleration/deceleration time varies with set speed and stroke length.
*Depending on acceleration/deceleration and stroke length, the trapezoid speed waveform may not be formed (the set speed may not be achieved). In this case, select the effective speed (Vb) from the set speed (V) and the achieved speed (Vmax), whichever is smaller.
*Use with acceleration time/deceleration time of 0.2 sec or longer.
*1 G ≈ 9.8 m/s^2.

STEP 3 Confirming allowable overhang length

Make sure that the load overhang length during operation is within the allowable range (pages 152 to 154).

For selection details, confirm with the CKD online model selection system, or contact CKD.

Introducing the online model selection system

[For confirmation via PC]

(https://www.ckd.co.jp/kiki/en/selection_system/)

[For confirmation via iPad or smartphone]

*Depending on your smartphone environment, it may not be displayed correctly.

MEMO

Allowable overhang length (ETS Series)

[When installed horizontally]

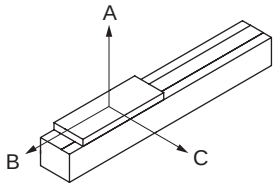

[Allowable overhang length]

● ETS-05

Motor mounted	Acceleration/deceleration time sec	Screw lead	Weight kg	Overhang mm A	B	C
Straight / side/bottom	0.2	2	5	750	45	105
			10	350	20	47
		5	4	480	45	105
			7	300	25	55
		10	3	300	55	110
			5	180	30	65

● ETS-06 *1

Motor mounted	Acceleration/deceleration time sec	Screw lead	Weight kg	Overhang mm A	B	C
Straight / side/bottom	0.2	2	10	400	65	150
			30	150	15	40
		5	10	520	50	110
			30	130	10	25
		10	3	800	145	330
			8	280	50	120
			15	140	23	55

● ETS-10 *2

Motor mounted	Acceleration/deceleration time sec	Screw lead	Weight kg	Overhang mm A	B	C
Straight / side/bottom	0.2	5	30	560	50	50
			50	310	27	27
		10	15	440	90	90
			25	250	50	50
			30	200	40	40
		16	5	950	270	230
			10	480	130	110
			22	200	55	45
		20	5	750	250	200
			10	370	120	95
			15	240	80	60

● ETS-12 *3

Motor mounted	Acceleration/deceleration time sec	Screw lead	Weight kg	Overhang mm A	B	C
Straight / side/bottom	0.2	5	30	900	70	80
			50	420	30	40
		10	15	900	150	160
			25	490	80	85
			30	400	60	70
		16	5	1700	430	450
			10	800	200	220
			22	330	80	85
		20	5	1200	420	400
			10	580	200	190
			15	370	120	120

● ETS-13 *4

Motor mounted	Acceleration/deceleration time sec	Screw lead	Weight kg	Overhang mm A	B	C
Straight / side/bottom	0.2	5	40	800	65	230
			55	560	45	160
			70	430	34	120
		10	25	600	100	280
			35	420	70	195
			47	300	50	145
		16	10	900	230	520
			20	440	115	250
			30	280	75	170
		20	5	1200	430	850
			15	400	140	270
			24	250	85	160

*When suspending from above, use 1/3 of the static allowable moment, dynamic allowable load, dynamic allowable moment, and overhang length.
Use overhang length up to the center of gravity of the load within A, B and C directions.
*1: The numbers are the same for ETS-06 50 W.
*2: The numbers are the same for ETS-10 200 W.
*3: The numbers are the same for ETS-12 200 W and ETS-13 100 W.
*4: The numbers are the same for ETS-13 400 W.

●ETS-14 200W

Motor mounted	Acceleration/deceleration time sec	Screw lead	Weight kg	Overhang mm A	B	C
Straight / side/bottom	0.2	5	60	2300	250	240
			80	1600	180	170
			95	1150	145	140
		10	30	2000	500	450
			50	1400	280	250
			75	1000	170	160
		16	10	2200	1200	1000
			20	1600	600	500
			44	800	260	220
		20	10	2300	1200	1000
			20	1400	600	500
			35	1000	330	290

●ETS-14 400W

Motor mounted	Acceleration/deceleration time sec	Screw lead	Weight kg	Overhang mm A	B	C
Straight / side/bottom	0.2	5	60	2300	250	240
			80	1600	180	170
			110	1150	120	115
		10	30	2000	500	450
			50	1400	280	250
			88	700	140	125
		16	10	2200	1200	1000
			20	1600	600	500
			48	900	260	220
		20	10	2300	1200	1000
			20	1400	600	500
			40	850	280	230

●ETS-17 400W

Motor mounted	Acceleration/deceleration time sec	Screw lead	Weight kg	Overhang mm A	B	C
Straight / side/bottom	0.2	5	60	2950	400	475
			100	2000	220	265
			110	1850	200	240
		10	60	1600	350	400
			75	1350	270	320
			90	1050	220	230
		20	30	1850	650	650
			50	1100	380	380
			75	700	240	240
		40	10	1700	1150	900
			20	850	550	430
			35	450	300	240

●ETS-17 750W

Motor mounted	Acceleration/deceleration time sec	Screw lead	Weight kg	Overhang mm A	B	C
Straight / side/bottom	0.2	5	60	3300	410	470
			100	2000	230	260
			120	1700	180	210
		10	60	2300	400	440
			75	1850	310	350
			95	1450	230	270
		20	30	2000	650	620
			50	1150	370	370
			83	650	210	210
		40	10	1650	1150	850
			20	530	350	270
			50	300	190	150

● ETS-22

Motor mounted	Acceleration/deceleration time sec	Screw lead	Weight kg	Overhang mm A	B	C
Straight / side/bottom	0.2	5	60	3600	650	650
			100	2800	350	340
			150	2300	260	230
		10	60	2850	960	810
			100	2000	570	460
			150	1450	340	310
		25	50	2000	850	610
			80	1200	500	360
			120	770	300	220
		40	10	4200	2850	1850
			30	1400	900	600
			60	650	420	270

Allowable overhang length (ETS Series)

[When wall-mounted]

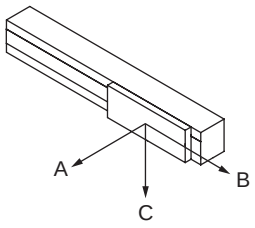

[Allowable overhang length]

● ETS-05

Motor mounted	Acceleration/deceleration time sec	Screw lead	Weight kg	Overhang mm A	B	C
Straight / side/bottom	0.2	2	5	105	45	750
			10	47	20	350
		5	4	100	45	450
			7	55	23	240
		10	3	110	55	400
			5	60	30	230

● ETS-06 *1

Motor mounted	Acceleration/deceleration time sec	Screw lead	Weight kg	Overhang mm A	B	C
Straight / side/bottom	0.2	2	15	110	42	400
			30	45	15	180
		5	5	240	95	1150
			10	115	50	540
			30	25	10	140
		10	3	320	150	700
			8	110	50	250
			15	50	25	120

● ETS-10 *2

Motor mounted	Acceleration/deceleration time sec	Screw lead	Weight kg	Overhang mm A	B	C
Straight / side/bottom	0.2	5	10	160	160	1400
			20	75	75	650
			30	45	45	400
		10	10	130	140	690
			20	60	65	330
			30	40	40	210
		16	5	230	250	750
			10	110	120	370
			22	45	50	160
		20	5	220	250	650
			10	105	120	320
			15	65	75	210

● ETS-12 *3

Motor mounted	Acceleration/deceleration time sec	Screw lead	Weight kg	Overhang mm A	B	C
Straight / side/bottom	0.2	5	10	330	270	2200
			20	145	120	1000
			30	90	70	600
		10	10	260	240	850
			20	115	110	520
			30	70	60	300
		16	5	450	450	1300
			10	210	210	600
			22	80	80	240
		20	5	410	410	1200
			10	190	195	600
			15	120	120	390

● ETS-13 *4

Motor mounted	Acceleration/deceleration time sec	Screw lead	Weight kg	Overhang mm A	B	C
Straight / side/bottom	0.2	5	40	240	70	850
			55	170	50	600
			70	125	35	450
		10	25	300	100	620
			35	210	70	420
			47	150	50	300
		16	10	530	230	900
			20	250	110	430
			30	170	70	280
		20	5	900	450	1300
			15	290	150	420
			24	170	90	260

*When suspending from above, use 1/3 of the static allowable moment, dynamic allowable load, dynamic allowable moment, and overhang length. Use overhang length up to the center of gravity of the load within A, B and C directions.
*1: The numbers are the same for ETS-06 50 W.
*2: The numbers are the same for ETS-10 200 W.
*3: The numbers are the same for ETS-12 200 W and ETS-13 100 W.
*4: The numbers are the same for ETS-13 400 W.

●ETS-14 200W

Motor mounted	Acceleration/deceleration time sec	Screw lead	Weight kg	Overhang mm A	B	C
Straight / side/bottom	0.2	5	60	240	250	1600
			80	170	180	1200
			95	140	145	1050
		10	30	420	460	1500
			50	240	250	1000
			75	150	160	700
		16	10	1050	1200	2650
			20	500	620	1450
			44	230	270	800
		20	10	1000	1200	1900
			20	500	600	1000
			35	270	300	600

●ETS-14 400W

Motor mounted	Acceleration/deceleration time sec	Screw lead	Weight kg	Overhang mm A	B	C
Straight / side/bottom	0.2	5	60	240	250	1600
			80	170	180	1200
			110	115	120	1050
		10	30	420	460	1500
			50	240	250	1000
			88	120	130	700
		16	10	1050	1200	2650
			20	500	620	1450
			48	200	230	800
		20	10	1000	1200	1900
			20	500	600	1000
			40	230	290	600

●ETS-17 400W

Motor mounted	Acceleration/deceleration time sec	Screw lead	Weight kg	Overhang mm A	B	C
Straight / side/bottom	0.2	5	60	500	420	2450
			100	280	240	1600
			110	250	215	1400
		10	60	420	380	1950
			75	330	300	1500
			90	270	240	1200
		20	30	650	650	1600
			50	375	380	900
			75	245	240	600
		40	10	900	1100	1750
			20	450	550	850
			35	240	300	470

●ETS-17 750W

Motor mounted	Acceleration/deceleration time sec	Screw lead	Weight kg	Overhang mm A	B	C
Straight / side/bottom	0.2	5	60	500	430	2700
			100	280	240	1650
			120	230	200	1350
		10	60	420	380	2300
			75	330	300	1800
			95	250	230	1400
		20	30	640	650	1700
			50	370	380	1000
			83	210	210	560
		40	10	900	1150	1700
			20	280	350	550
			50	160	195	310

● ETS-22

Motor mounted	Acceleration/deceleration time sec	Screw lead	Weight kg	Overhang mm A	B	C
Straight / side/bottom	0.2	5	60	940	1100	3850
			100	540	620	2450
			150	340	400	2150
		10	60	800	980	3700
			100	460	540	2200
			150	280	350	1450
		25	50	600	790	1950
			80	360	480	1200
			120	220	290	750
		40	10	1950	2900	3500
			30	620	950	1400
			60	290	430	650

Allowable overhang length (ETS Series)

[When installed vertically]

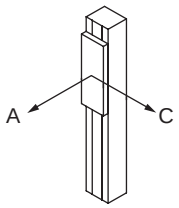

[Allowable overhang length]

● ETS-05

Motor mounted	Acceleration/deceleration time sec	Screw lead	Weight kg	Overhang mm A	Overhang mm C
Straight / side/bottom	0.2	2	3	80	80
			7	35	35
		5	3	65	65
		10	1.5	120	120

● ETS-06 *1

Motor mounted	Acceleration/deceleration time sec	Screw lead	Weight kg	Overhang mm A	Overhang mm C
Straight / side/bottom	0.2	2	5	160	160
			15	53	53
		5	2	300	300
			4	150	150
			10	60	60
		10	1	410	410
			2	205	205
			5	82	82

● ETS-10 *2

Motor mounted	Acceleration/deceleration time sec	Screw lead	Weight kg	Overhang mm A	Overhang mm C
Straight / side/bottom	0.2	5	5	310	310
			10	155	155
			12	130	130
		10	4	360	360
			6	240	240
			8	180	180
		16	1	1050	1050
			2	525	525
			5	210	210
		20	1	850	850
			2	425	425
			3	283	283

● ETS-12 *3

Motor mounted	Acceleration/deceleration time sec	Screw lead	Weight kg	Overhang mm A	Overhang mm C
Straight / side/bottom	0.2	5	5	600	600
			10	300	300
			12	250	250
		10	4	650	650
			6	430	430
			8	320	320
		16	1	1050	1050
			2	525	525
			5	210	210
		20	3	650	700

● ETS-13 *4

Motor mounted	Acceleration/deceleration time sec	Screw lead	Weight kg	Overhang mm A	Overhang mm C
Straight / side/bottom	0.2	5	5	600	600
			10	300	300
			12	250	250
		10	4	650	650
			6	430	430
			8	320	320
		16	1	1350	1350
			2	900	900
			6	350	350
		20	1	1050	1050
			2	900	900
			4	550	550

*When suspending from above, use 1/3 of the static allowable moment, dynamic allowable load, dynamic allowable moment, and overhang length. Use overhang length up to the center of gravity of the load within A, B and C directions.
*1: The numbers are the same for ETS-06 50 W.
*2: The numbers are the same for ETS-10 200 W.
*3: The numbers are the same for ETS-12 200 W and ETS-13 100 W.
*4: The numbers are the same for ETS-13 400 W.

●ETS-14 200W

Motor mounted	Acceleration/deceleration time sec	Screw lead	Weight kg	Overhang mm A	Overhang mm C
Straight / side/bottom	0.2	5	20	755	755
			25	605	605
			27	560	560
		10	10	1350	1350
			15	900	900
			18	750	750
		16	2	2400	2400
			4	1700	1700
			7	1300	1300
		20	6	1700	1700

●ETS-14 400W

Motor mounted	Acceleration/deceleration time sec	Screw lead	Weight kg	Overhang mm A	Overhang mm C
Straight / side/bottom	0.2	5	20	755	755
			25	605	605
			33	455	455
		10	10	1350	1350
			15	900	900
			22	650	650
		16	2	2400	2400
			4	1700	1700
			10	1000	1000
		20	4	1800	1800
			6	1200	1200
			8	900	900

●ETS-17 400W

Motor mounted	Acceleration/deceleration time sec	Screw lead	Weight kg	Overhang mm A	Overhang mm C
Straight / side/bottom	0.2	5	20	1400	1400
			30	950	950
			40	700	700
		10	15	1700	1700
			25	1000	1000
			30	850	850
		20	5	2000	2000
			10	1800	1800
			14	1400	1400
		40	7	650	650

●ETS-17 750W

Motor mounted	Acceleration/deceleration time sec	Screw lead	Weight kg	Overhang mm A	Overhang mm C
Straight / side/bottom	0.2	5	20	1500	1500
			30	1000	1000
			50	600	600
		10	15	1700	1700
			25	1000	1000
			40	620	620
		20	5	2200	2200
			10	1900	1900
			25	730	730
		40	10	700	700

● ETS-22

Motor mounted	Acceleration/deceleration time sec	Screw lead	Weight kg	Overhang mm A	Overhang mm C
Straight / side/bottom	0.2	5	30	2400	2400
			50	1450	1450
			55	1050	1050
		10	20	3000	3000
			30	2000	2000
			45	1350	1350
		25	15	2600	2600
			20	1950	1950
			25	1550	1550
		40	5	2600	2600
			10	1950	1950

MEMO

Origin sensor, limit sensor

Manufacturer	Model	Quantity
OMRON Corporation	EE-SX672	3

Performance

Item	Specifications
Hysteresis	0.025 mm or less
Light source (peak emission wavelength)	GaAs infrared LED (940 nm)
Indicator lamp	ON when receiving light (red)
Power supply voltage	5 to 24 VDC ±10% ripple (P-P) 10% or less
Current consumption	35 mA or less (NPN)
Control output	NPN: NPN open collector output 5 to 24 VDC 100 mA or less OFF state current 0.5 mA or less Residual voltage 0.8 V or less (at load current 100 mA) Residual voltage 0.4 V or less (at load current 40 mA)
Operating ambient illumination	Light-receiving surface luminance Fluorescent light: 1,000 lx or less
Ambient temperature range	When operating: -25 to +55°C When stored: -30 to +80°C (no condensation or freezing)
Ambient humidity range	When operating: 5 to 85% RH When stored: 5 to 95% RH (no condensation or freezing)
Degree of protection	IP50 IEC 60529 Standards
Cord length	2 m (Connector with cord [EE-1006 2M])

Output circuit

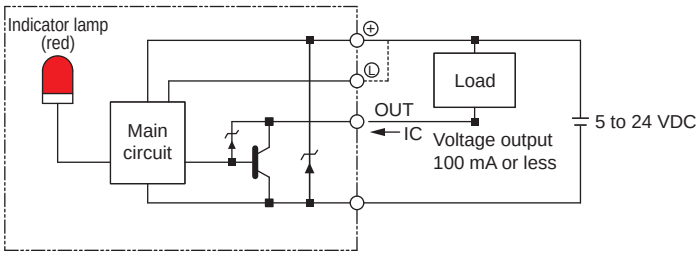

Wiring diagram

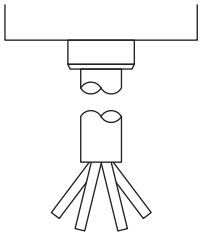

Terminal layout

Brown	5 to 24 VDC
Pink	L
Blue	0 V
Black	OUTPUT

Sensor dog dimensions

Body size	Motor mounting direction
	E/D/R/L
ETS-05	Fig. 1
ETS-06	Fig. 2

Body size	Motor mounting direction				
	E/D/B	R		L	
		Grease nipple None	Grease nipple Yes	Grease nipple None	Grease nipple Yes
ETS-10	Fig. 3	Fig. 3		Fig. 3	
ETS-12	Fig. 3	Fig. 3	Fig. 4	Fig. 3	Fig. 4

Fig. 1

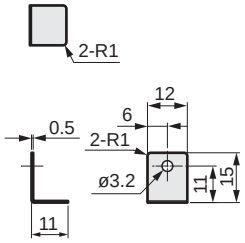

Fig. 2

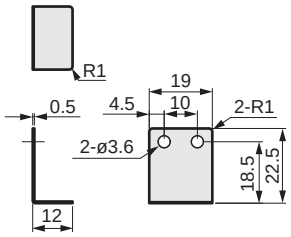

Fig. 3

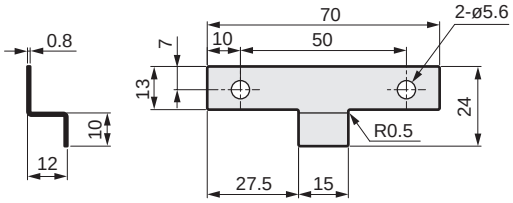

Fig. 4

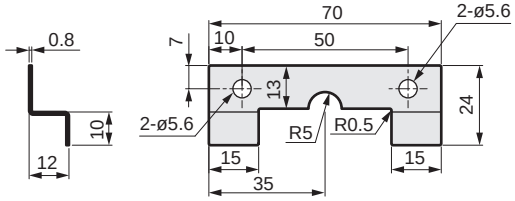

Body size	Motor mounting direction				
	E/D/B	R		L	
		Grease nipple None	Grease nipple Yes	Grease nipple None	Grease nipple Yes
ETS-13	Fig. 5	Fig. 5	Fig. 6	Fig. 5	Fig. 6
ETS-14	Fig. 5	Fig. 5	Fig. 7	Fig. 5	Fig. 8
ETS-17	Fig. 5	Fig. 5	Fig. 7	Fig. 5	Fig. 8
ETS-22	Fig. 9	Fig. 9	Fig. 10	Fig. 9	Fig. 10

Fig. 5

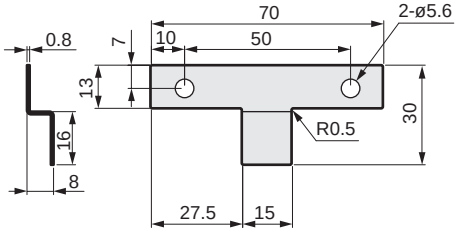

Fig. 6

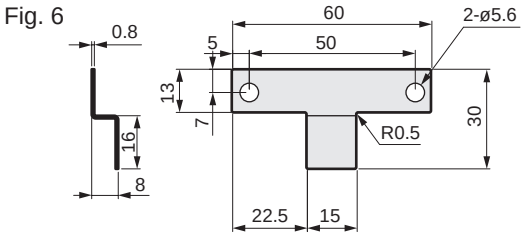

Fig. 7

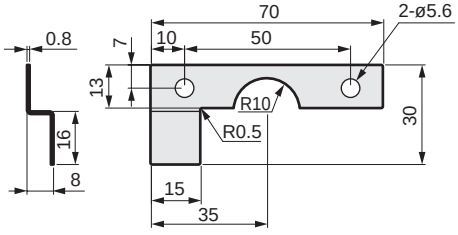

Fig. 8

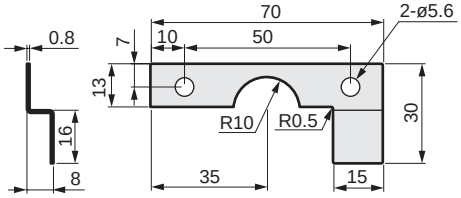

Fig. 9

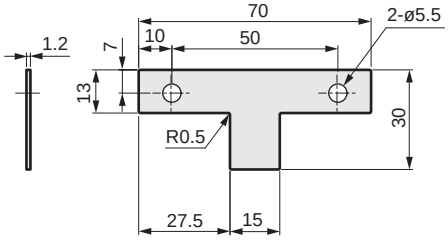

Fig. 10

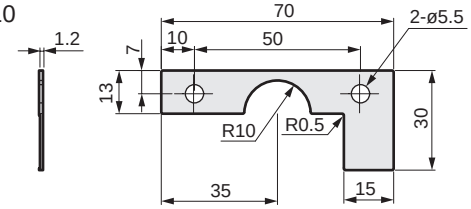

Grease nipple dimensions

*Horizontally symmetrical against the actuator.

ETS-10

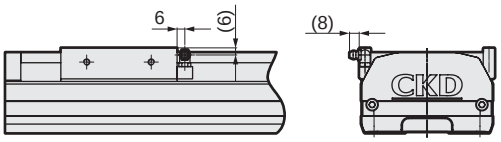

ETS-12

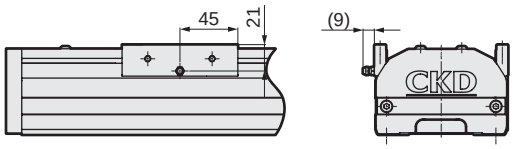

ETS-13

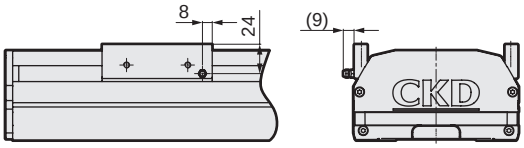

ETS-14

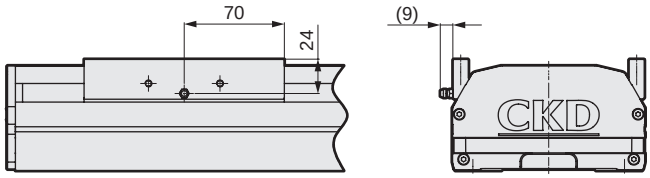

ETS-17

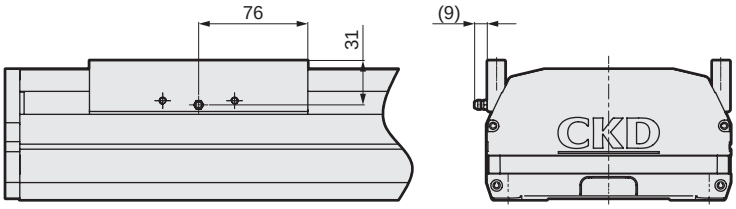

ETS-22

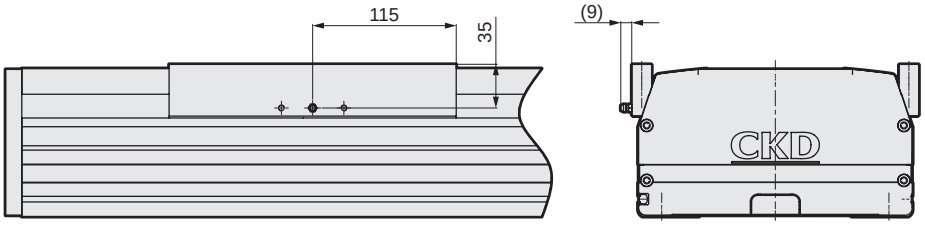

MEMO

List of attachments

Basic

Motor mounting bolt (common motor mounting direction)

Model No.	Mounted motor specification	Motor capacity	Size	Quantity
ETS-05	M	100 W	M4	2
	Y		M4	2
	P		M3	4
	F		M4	2
ETS-06	M	50 W/100 W	M4	2
	Y		M4	2
	P		M3	4
	F		M4	2
ETS-10 ETS-12	M	100 W/200 W	M4/M5	2/4
	Y		M4/M5	2/4
	P		M3/M4	4
	F		M4/M5	2/4
ETS-13	M	100 W/200 W/400 W	M4/M5/M5	2/4/4
	Y		M4/M5/M5	2/4/4
	P		M3/M4/M4	4
	F		M4/M5/M5	2/4/4
ETS-14	M	200 W/400 W	M5	4
	Y		M5	4
	P		M4	4
	F		M5	4
ETS-17	M	400 W	M5	4
	Y		M5	4
	P		M4	4
	F		M5	4
	M	750 W	M6	4
	Y		M6	4
	P		M5	4
	F		M6	4
ETS-22	M	750 W	M6	4
	Y		M6	4
	P		M5	4
	F		M6	4

By motor mounting direction

Model No.	Attachment name	Quantity
E (external direct mounting) B (built-in)	Coupling (assembled at shipment)	1
R (right-side mounting) L (left-side mounting) D (bottom mounting)	Timing belt	1
	Pulley	1

When origin/limit sensor is selected *1

Sensor mounting direction	Shipping format	Quantity
Inside sensor	Fixed position assembled at shipment	3 *2
Outside sensor	Included at shipment *3	

*1 Shipping format varies according to whether origin sensor and limit sensor are assembled inside or outside.
*2 When “None” is selected for origin sensor or limit sensor, the other sensor is also “None”.
*3 Sensor mounting screws are also included.

Maintenance parts

● Maintenance parts set

Model No.	Compatibility	Components			
		(1)	(2)	(3)	(4)
		Timing belt 	Pulley 	Sensor dog 	Photoelectric bracket 
ETS-08JP002-0001	ETS-05	○ (1 pc)	○ (1 pc)	○ (1 pc)	-
ETS-08JP002-0002	ETS-06	○ (2 pcs)	○ (1 pc)	○ (1 pc)	-
ETS-08JP002-0003	ETS-10	○ (3 pcs)	○ (2 pcs)	○ (1 pc)	○ (4 pcs)
ETS-08JP002-0004	ETS-12	○ (2 pcs)	○ (2 pcs)	○ (1 pc)	○ (4 pcs)
ETS-08JP002-0005	ETS-13, 14	○ (2 pcs)	○ (3 pcs)	○ (1 pc)	-
ETS-08JP002-0007	ETS-17	○ (4 pcs)	○ (2 pcs)	○ (1 pc)	-
ETS-08JP002-0008	ETS-22	○ (3 pcs)	○ (2 pcs)	○ (1 pc)	-

*Contact CKD regarding maintenance parts for metal stopper specifications (ETS-X).

● Maintenance parts (coupling)

Model No. 	Compatibility	Motor capacity	Hole diameter
ETS-22007-000136	ETS-05, 06	100 W	ø8
ETS-22007-000014	ETS-10, 12	100 W	ø8
ETS-22007-000289	ETS-10, 12, 13, 14 (Mounted motor specification: F)	200 W	ø9
ETS-22007-000016	ETS-10, 12, 13, 14 (Mounted motor specification: P)	200 W	ø11
ETS-22007-000017	ETS-10, 12, 13, 14 (Mounted motor specification: M, Y)	200 W/400 W	ø14
ETS-22007-000022	ETS-17 (Mounted motor specification: P)	400 W	ø14
ETS-22007-000358	ETS-17 (Mounted motor specification: F)	750 W	ø14
ETS-22007-000397	ETS-22 (Mounted motor specification: F)	750 W	ø14
ETS-22007-000024	ETS-17 (Mounted motor specification: M, Y)	750 W	ø19
ETS-22007-000029	ETS-22 (Mounted motor specification: M, Y, P)	750 W	ø19

● Maintenance parts (outside mounted sensor)

Basic price model No. 	Compatibility	Part
ETS-22008-000001	All models	Body
ETS-22008-000006		Cable

Safety precautions

Stepper motor compatible				Servo motor compatible							
ECS	ETS	EBR	EBS	EKS	ECV	ETV	ECS	ETS Multi-Axis	ETS	EBR	EBS

ETS Multi-Axis

Electric actuator
Servo motor compatible
Motorless specifications

Ball screw drive



CONTENTS

Product introduction	Intro Page
● 2-axis combination table	164
● 2-axis combination load capacity table	165
● X-Y axes (A type)	166
● X-Y axes/with support guide (G type)	204
● X-Z axes (P type)	218
● Y-Z axes (F type)	232
● Combination parts	246
⚠ Safety precautions	686
Model selection check sheet	709

Series variation

Combinations of multiple axes * Set model No. Check the following table for combinations of axes.

[2-axis combination]

Specifications		Set model No.	Combination	1st axis	2nd axis	1st axis stroke	2nd axis stroke	Page
X - Y	A type 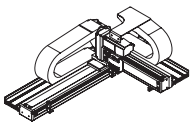	**ETS-210**	A	ETS-06-10	ETS-05-10	100 to 800	50 to 350	166
		ETS-430	A	ETS-12-20	ETS-10-20	100 to 1050	50 to 550	
		ETS-440	A	ETS-12-20	ETS-12-20	100 to 1050	50 to 550	
		ETS-650	A	ETS-14-20	ETS-13-20	100 to 1050	50 to 650	
		ETS-760	A	ETS-17-20	ETS-14-20	100 to 1250	50 to 650	
		ETS-870	A	ETS-22-25	ETS-17-20	100 to 1500	50 to 750	
	G type (with support guide) 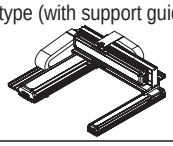	**ETS-760**	G	ETS-17-20	ETS-14-20	100 to 1250	200 to 850	204
		ETS-870	G	ETS-22-25	ETS-17-20	100 to 1500	200 to 1050	
X - Z	P type 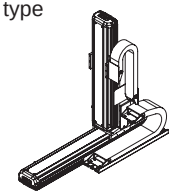	**ETS-650**	P	ETS-14-20	ETS-13-10	100 to 1050	50 to 550	218
		ETS-760	P	ETS-17-20	ETS-14-10	100 to 1250	50 to 650	
		ETS-880	P	ETS-22-25	ETS-22-05	100 to 1500	50 to 950	
Y - Z	F type 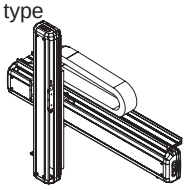	**ETS-530**	F	ETS-13-20	ETS-10-10	100 to 1050	50 to 350	232
		ETS-640	F	ETS-14-20	ETS-12-10	100 to 1050	50 to 350	
		ETS-760	F	ETS-17-20	ETS-14-10	100 to 1250	50 to 550	

List of servo motors recommended for mounting

Code	Manufacturer	Series	100 W *2 (ETS-05/06/10/12/13 Series)
M	Mitsubishi Electric Corporation	MELSERVO J4	HG-KR13
		MELSERVO J5	HK-KT_13W
M	Delta Electronics Co., Ltd.	ECMA-C *1	ECMA-C10401
M	Sanyo Corporation, Ltd.	SANMOTION R	R2□A04010
Y	YASKAWA Electric Corporation	Σ-V	SGMJV-01
Y	Keyence Corporation	SV	SV-□010
P	Panasonic Corporation	MINAS A5	MSMD01
O	OMRON Corporation	G5	R88M-K10030

Code	Manufacturer	Series	200 W *2 *3 (ETS-10/12/13/14 Series)	400 W (ETS-13/14/17 Series)	750 W *4 (ETS-17/22 Series)
M	Mitsubishi Electric Corporation	MELSERVO J4	HG-KR23	HG-KR43	HG-KR73
		MELSERVO J5	HK-KT_23W	HK-KT_43W	HK-KT_7M3W
M	Delta Electronics Co., Ltd.	ECMA-C *1	ECMA-C10602	ECMA-C10604	ECMA-C10807
M	Sanyo Corporation, Ltd.	SANMOTION R	R2□A06020	R2□A06040	-
Y	YASKAWA Electric Corporation	Σ-V	SGMJV-02	SGMJV-04	SGMJV-08
Y	Keyence Corporation	SV	SV-□020	SV-□040	SV-□075
P	Panasonic Corporation	MINAS A5	MSMD02	MSMD04	MSMD08
O	OMRON Corporation	G5	R88M-K20030	R88M-K40030	R88M-K75030

*Contact CKD for mounting other than the above motors and products of other motor manufacturers.
*1: ECMA series (with brake) cannot be used with built-in mounting.
*2: Contact CKD when using an OMRON motor with ETS-12 built-in mounting.
*3: ETS-10 and 12 200 W cannot be used with built-in mounting. *4: ETS-17 750 W cannot be used with built-in mounting.

2-axis combination load capacity

X-Y axes (A type/G type)

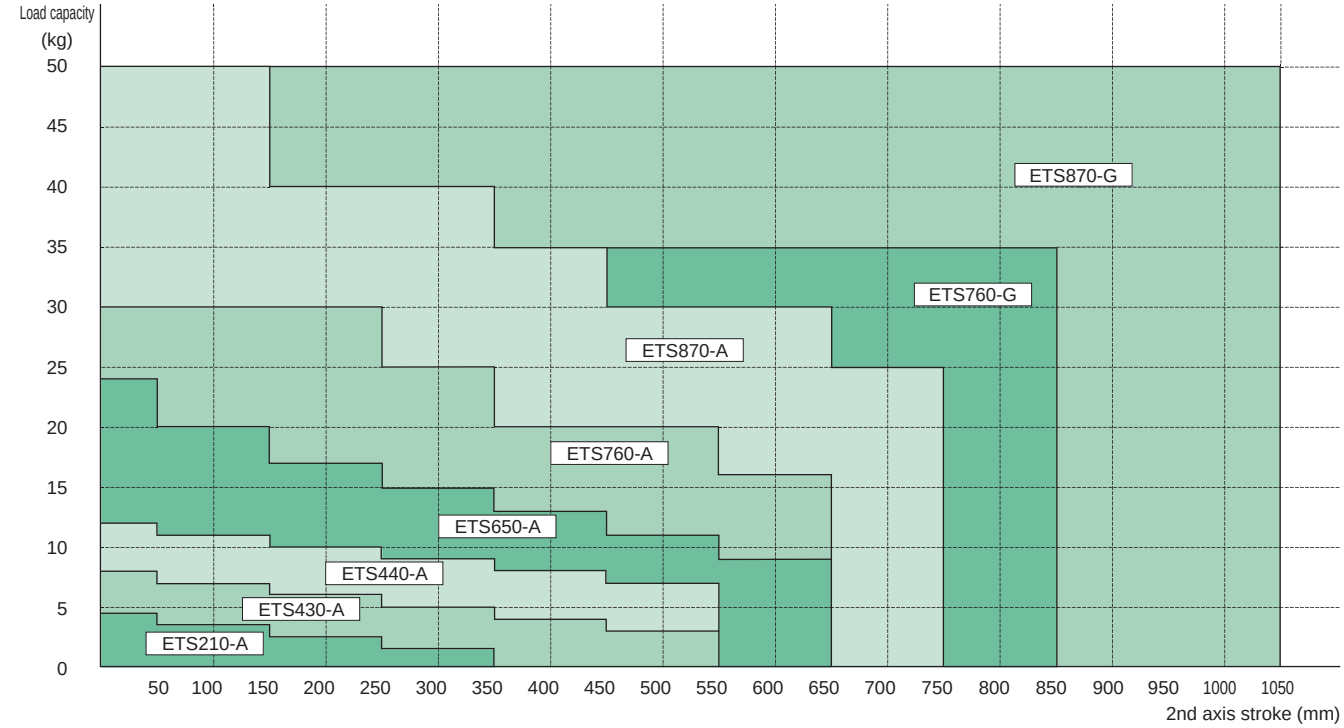

X-Z axes (P type)

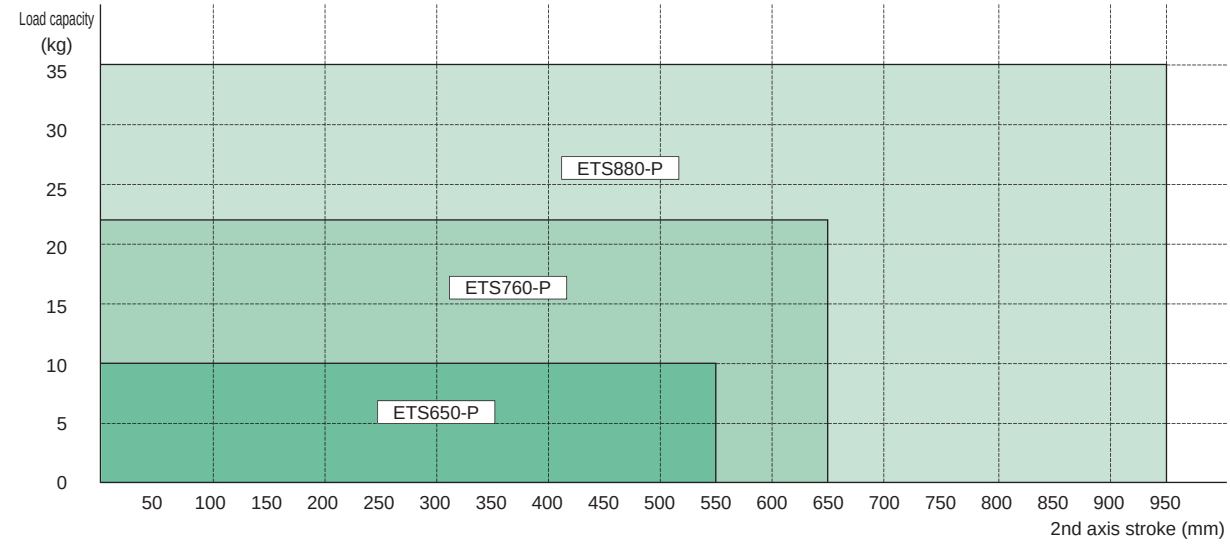

Y-Z axes (F type)

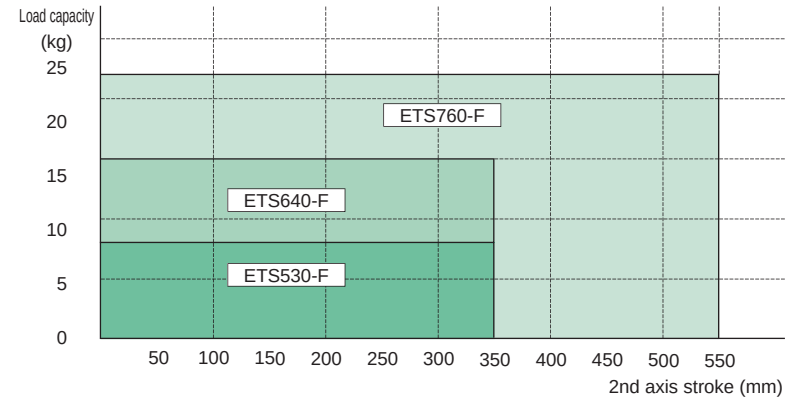



Electric actuator Ball screw drive Slider

ETS Multi-Axis Series

- Servo motor capacity: 100 W/200 W/400 W/750 W
- 2-axis combination X-Y axes (A type)

RoHS

How to order

ETS - 210 A 1 - 040 030 - M N W

(A) (B) (C) (D) (E) (F) (G) (H)

(A) Combined axes

210	ETS-06 × ETS-05
430	ETS-12 × ETS-10
440	ETS-12 × ETS-12
650	ETS-14 × ETS-13
760	ETS-17 × ETS-14
870	ETS-22 × ETS-17

(B) Combination

A	X-Y axes

(C) Combination direction

1 to 4	Confirm the table below.

(D) 1st axis stroke

010 to 150	100 mm to (50 mm pitch) 1500 mm

(E) 2nd axis stroke

005 to 075	50 mm to (50 mm pitch) 750 mm

(F) Mounted motor specification *3

M, Y, P, O	Select the mounted motor specification from the table below.

(G) Brake *1

N	None

(H) Origin/Limit sensor (3 pcs × 2 axes) *2

N	None
W	Yes

*1: The brake targets the 2nd axis.
*2: The user can adjust the sensor position. (Included at shipment)
*3: When "O" is selected for Mounted motor specification, the motor specification code for the 1st and 2nd axes is "M" or "P".

(C) Combination direction

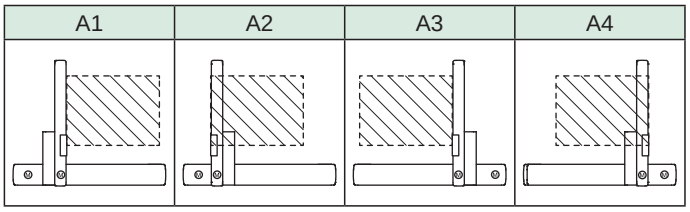

(F) Mounted motor specification

Manufacturer	100 W	200 W	400 W	750 W
Mitsubishi Electric Corporation	M	M	M	M
Delta Electronics Co., Ltd.	M	M	M	M
Sanyo Denki Co., Ltd.	M	M	M	-
YASKAWA Electric Corporation	Y	Y	Y	Y
Keyence Corporation	Y	Y	Y	Y
Panasonic Corporation	P	P	P	P
OMRON Corporation	O	O	O	O

*Refer to page 164 for the motor model No.

Axis combination specifications

Ⓒ Combination direction and motor mounting direction

Combined axes	Combination	Combination direction	Motor mounting direction and motor capacity									
			1st axis					2nd axis				
			Model	100 W	200 W	400 W	750 W	Model	100 W	200 W	400 W	750 W
ETS-210	A	1	ETS-06	E	-	-	-	ETS-05	R	-	-	-
		2		E	-	-	-		L	-	-	-
		3		E	-	-	-		L	-	-	-
		4		E	-	-	-		R	-	-	-
ETS-430	A	1	ETS-12	B	-	-	-	ETS-10	R	-	-	-
		2		B	-	-	-		L	-	-	-
		3		B	-	-	-		L	-	-	-
		4		B	-	-	-		R	-	-	-
ETS-440 *1	A	1	ETS-12	B	-	-	-	ETS-12	R	-	-	-
		2		B	-	-	-		L	-	-	-
		3		B	-	-	-		L	-	-	-
		4		B	-	-	-		R	-	-	-
ETS-650	A	1 to 4	ETS-14	-	-	B	-	ETS-13	-	B	-	-
ETS-760	A	1 to 4	ETS-17	-	-	B	-	ETS-14	-	B	-	-
ETS-870	A	1 to 4	ETS-22	-	-	-	B	ETS-17	-	-	B	-

*E: Straight mount B: Built-in mount R: Right side mount L: Left side mount
*Motor mounting direction is determined by combination direction.
*1: Contact CKD when using an OMRON motor.

ⒹⒺ stroke length

Combined axes	Combination	1st axis			2nd axis		
		Model	Screw lead (mm)	Stroke (mm)	Model	Screw lead (mm)	Stroke (mm)
ETS-210	A	ETS-06	10	100 to 800	ETS-05	10	50 to 350
ETS-430		ETS-12	20	100 to 1050	ETS-10	20	50 to 550
ETS-440		ETS-12	20	100 to 1050	ETS-12	20	50 to 550
ETS-650		ETS-14	20	100 to 1050	ETS-13	20	50 to 650
ETS-760		ETS-17	20	100 to 1250	ETS-14	20	50 to 650
ETS-870		ETS-22	25	100 to 1500	ETS-17	20	50 to 750

Grease nipple

Combined axes	Combination	Combination direction	1st axis		2nd axis		Combined axes	Combination	Combination direction	1st axis		2nd axis	
			Model	Grease nipple position	Model	Grease nipple position				Model	Grease nipple position	Model	Grease nipple position
ETS-210	A	1	ETS-06	-	ETS-05	-	ETS-650	A	1	ETS-14	L	ETS-13	R
		2							2		L		L
		3							3		R		L
		4							4		R		R
ETS-430	A	1	ETS-12	L	ETS-10	R	ETS-760	A	1	ETS-17	L	ETS-14	R
		2		L		L			2		L		L
		3		R		L			3		R		L
		4		R		R			4		R		R
ETS-440	A	1	ETS-12	L	ETS-12	R	ETS-870	A	1	ETS-22	L	ETS-17	R
		2		L		L			2		L		L
		3		R		L			3		R		L
		4		R		R			4		R		R

*The grease nipple is not attached for ETS-05 and 06.
R: Right side L: Left side



Electric actuator Ball screw drive Slider

ETS Multi-Axis Series

- Servo motor capacity: 100 W
- 2-axis combination X-Y axes (A type)

RoHS

How to order

ETS - 210 A 1 - 040 030 - M N W

(A) (B) (C) (D) (E) (F) (G) (H)

(A) Combined axes

210	ETS-06 × ETS-05

(B) Combination

A	X-Y axis

(C) Combination direction

1 to 4	Confirm the table below.

(D) 1st axis stroke

010 to 080	100 mm to (50 mm pitch) 800 mm

(E) 2nd axis stroke

005 to 035	50 mm to (50 mm pitch) 350 mm

(F) Mounted motor specification *3

M, Y, P, O	Select the mounted motor specification from the table below.

(G) Brake *1

N	None

(H) Origin/Limit sensor (3 pcs × 2 axes) *2

N	None
W	Yes

*1: The brake targets the 2nd axis.
*2: The user can adjust the sensor position. (Included at shipment)
*3: When "O" is selected for Mounted motor specification, the motor specification code for the 1st and 2nd axes is "M" or "P".

(F) Mounted motor specification

Manufacturer	100 W
Mitsubishi Electric Corporation	M
Delta Electronics Co., Ltd.	M
Sanyo Denki Co., Ltd.	M
YASKAWA Electric Corporation	Y
Keyence Corporation	Y
Panasonic Corporation	P
OMRON Corporation	O

*Refer to page 164 for the motor model No.

(C) Combination direction

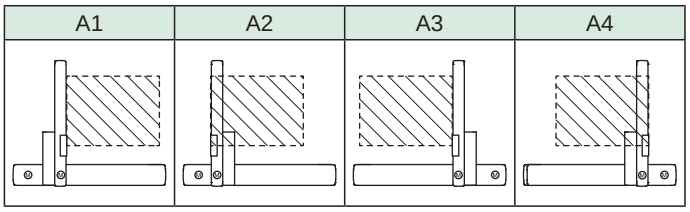

(C) Combination direction and motor mounting direction

Combined axes	Combination	Combination direction	Motor mounting direction and motor capacity			
			1st axis		2nd axis	
			Model	100 W	Model	100 W
ETS-210	A	1	ETS-06	E	ETS-05	R
		2		E		L
		3		E		L
		4		E		R

*E: Straight mount R: Right side mount L: Left side mount
*Motor mounting direction is determined by combination direction.

(D)(E) stroke length

Combined axes	Combination	1st axis			2nd axis		
		Model	Screw lead (mm)	Stroke (mm)	Model	Screw lead (mm)	Stroke (mm)
ETS-210	A	ETS-06	10	100 to 800	ETS-05	10	50 to 350

*The grease nipple is not attached for ETS-05 and 06.

Dimensions

● ETS-210A1

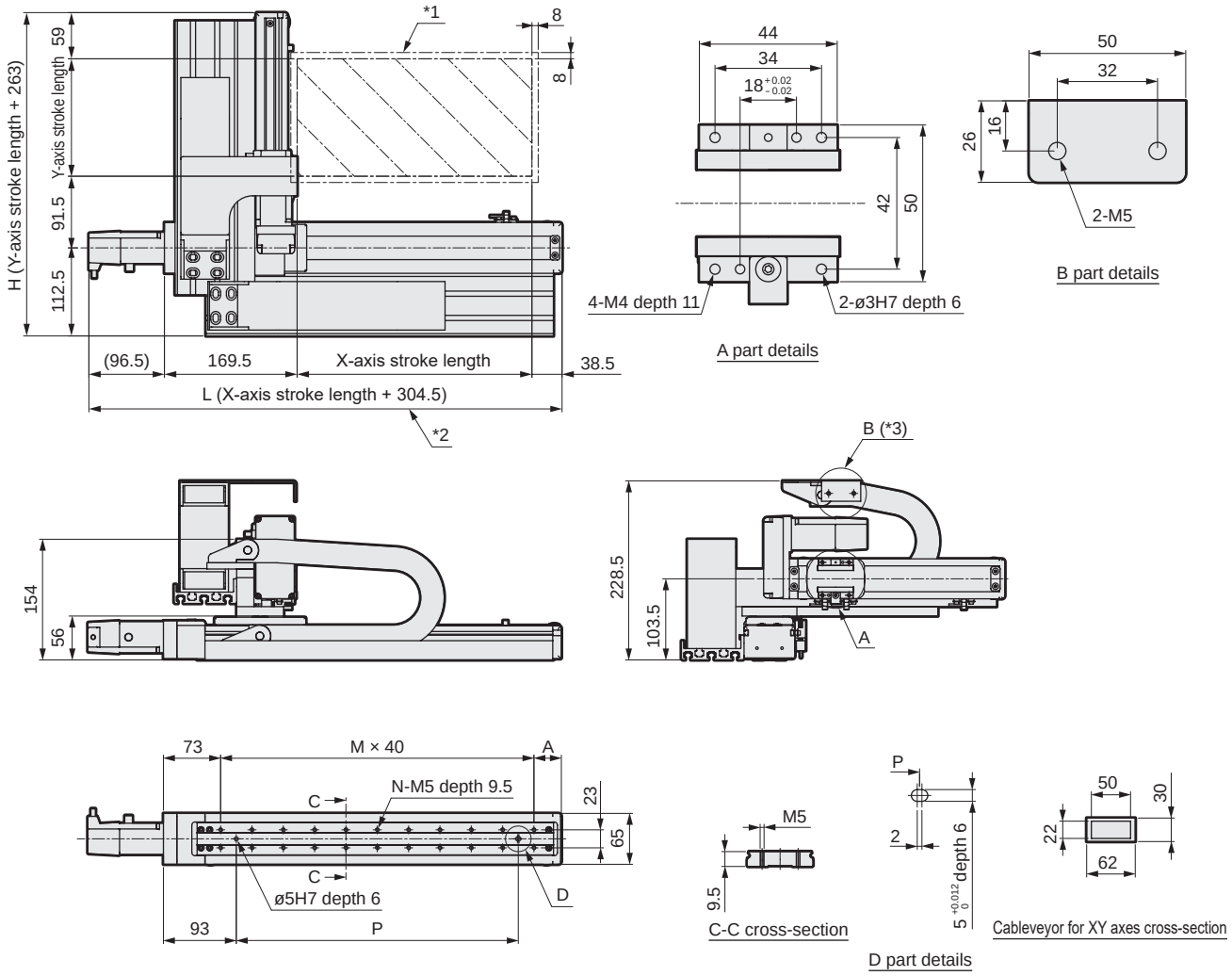

*1: Stops within the moving range and this range when returning to origin.
*2: The length of the L-axis changes depending on the manufacturer of the motor installed.
*3: Fix the end of the Y-axis cableveyor on site.

*This figure shows the dimensions when combined.

X-axis stroke (mm)	100	150	200	250	300	350	400	450	500	550	600	650	700	750	800
L	404.5	454.5	505.4	554.5	604.5	654.5	704.5	754.5	804.5	854.5	904.5	954.5	1004.5	1054.5	1104.5
A	35	45	55	65	35	45	55	65	35	45	55	65	35	45	55
M	5	6	7	8	9	11	12	13	14	16	17	18	19	21	22
N	12	14	16	18	22	24	26	28	32	34	36	38	42	44	46
P	160	200	240	280	360	400	440	480	560	600	640	680	760	800	840
Max. working speed (mm/s)	500											450	400	350	300

Y-axis stroke (mm)	50	100	150	200	250	300
H	313	363	413	463	513	563
Max. working speed (mm/s)	500					
Max. load capacity (kg)	4.5	3.5		2.5		1.5

List of attachments

[Motor mounting parts]

Model No.	Mounted motor specification	Motor mounting direction	Mounting parts	Shipment capacity	Motor capacity	Motor mounting bolt	
ETS-06	M	E	Coupling	Assembled at shipment	100 W	M4	2
	Y					M4	2
ETS-05	P	R, L	Timing belt, pulley	Included at shipment		M3	4

*When "O" is selected for Mounted motor specification, the motor specification code for the 1st and 2nd axes is "M" or "P".

[Origin sensor/Limit sensor]

Manufacturer	Model	Quantity
OMRON Corporation	EE-SX672	6

*Refer to page 156 for sensor specifications.

[Other attachments for axis combinations]

Cableveyor, axis combination bracket

Dimensions

● ETS-210A2

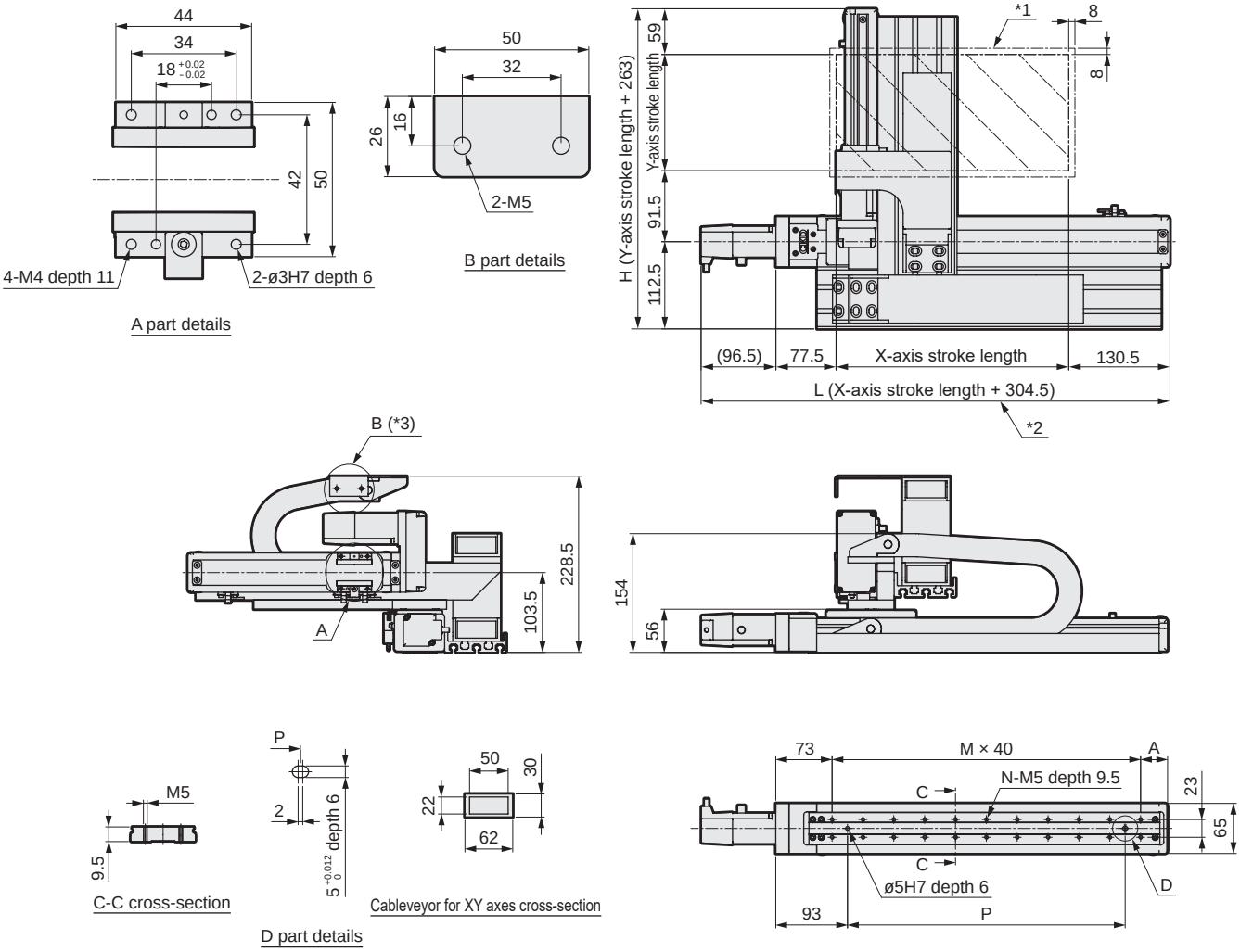

*1: Stops within the moving range and this range when returning to origin.
*2: The length of the L-axis changes depending on the manufacturer of the motor installed.
*3: Fix the end of the Y-axis cableveyor on site.

*This figure shows the dimensions when combined.

X-axis stroke (mm)	100	150	200	250	300	350	400	450	500	550	600	650	700	750	800
L	404.5	454.5	505.4	554.5	604.5	654.5	704.5	754.5	804.5	854.5	904.5	954.5	1004.5	1054.5	1104.5
A	35	45	55	65	35	45	55	65	35	45	55	65	35	45	55
M	5	6	7	8	9	11	12	13	14	16	17	18	19	21	22
N	12	14	16	18	22	24	26	28	32	34	36	38	42	44	46
P	160	200	240	280	360	400	440	480	560	600	640	680	760	800	840
Max. working speed (mm/s)	500											450	400	350	300

Y-axis stroke (mm)	50	100	150	200	250	300
H	313	363	413	463	513	563
Max. working speed (mm/s)	500					
Max. load capacity (kg)	4.5	3.5		2.5		1.5

List of attachments

[Motor mounting parts]

Model No.	Mounted motor specification	Motor mounting direction	Mounting parts	Shipment method	Motor capacity	Motor mounting bolt	
ETS-06	M	E	Coupling	Assembled at shipment	100 W	M4	2
	Y					M4	2
ETS-05	P	R, L	Timing belt, pulley	Included at shipment		M3	4

* When "O" is selected for Mounted motor specification, the motor specification code for the 1st and 2nd axes is "M" or "P".

[Origin sensor/Limit sensor]

Manufacturer	Model	Quantity
OMRON Corporation	EE-SX672	6

*Refer to page 156 for sensor specifications.

[Other attachments for axis combinations]

Cableveyor, axis combination bracket

Dimensions

● ETS-210A3

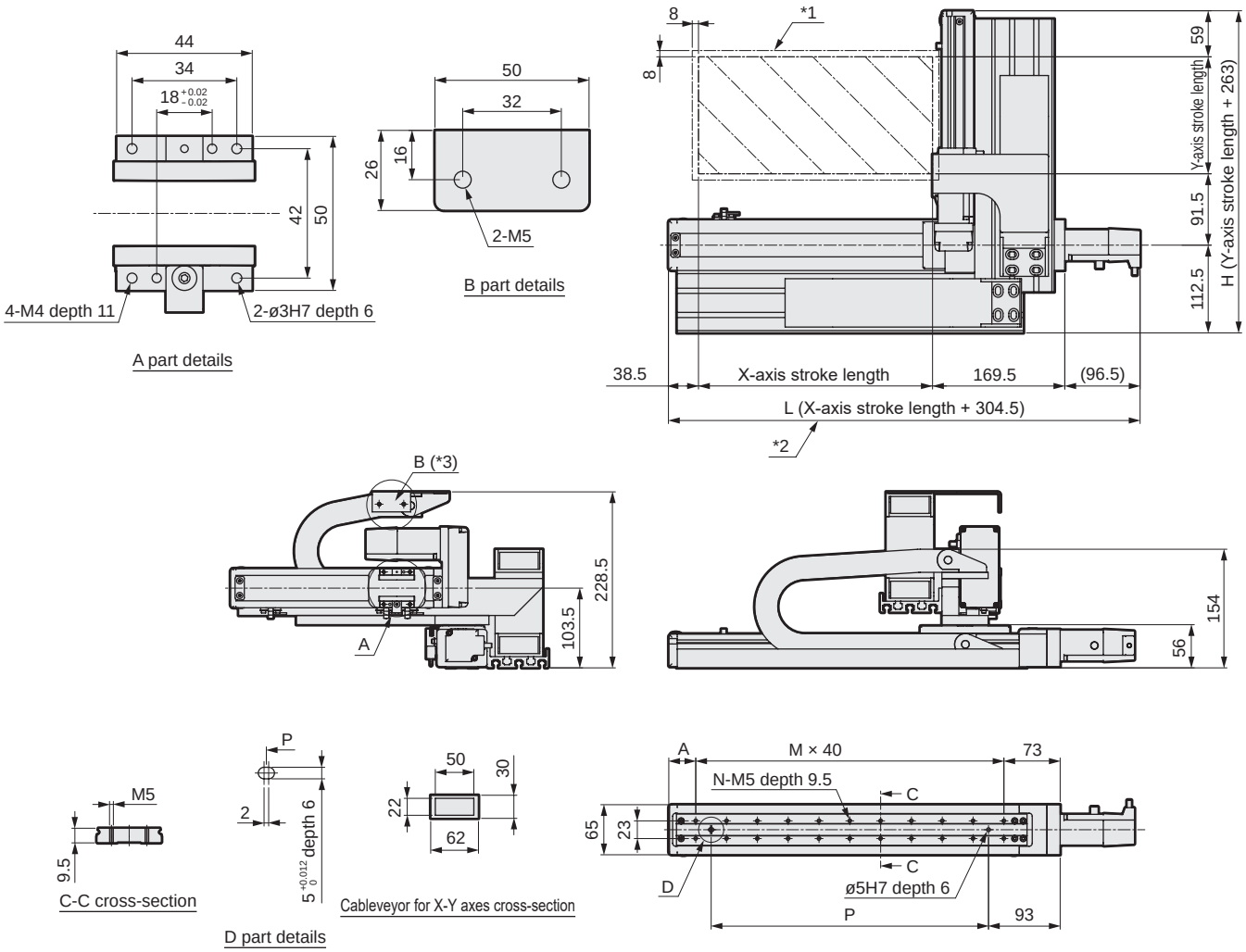

*1: Stops within the moving range and this range when returning to origin.
*2: The length of the L-axis changes depending on the manufacturer of the motor installed.
*3: Fix the end of the Y-axis cableveyor on site.

*This figure shows the dimensions when combined.

X-axis stroke (mm)	100	150	200	250	300	350	400	450	500	550	600	650	700	750	800
L	404.5	454.5	505.4	554.5	604.5	654.5	704.5	754.5	804.5	854.5	904.5	954.5	1004.5	1054.5	1104.5
A	35	45	55	65	35	45	55	65	35	45	55	65	35	45	55
M	5	6	7	8	9	11	12	13	14	16	17	18	19	21	22
N	12	14	16	18	22	24	26	28	32	34	36	38	42	44	46
P	160	200	240	280	360	400	440	480	560	600	640	680	760	800	840
Max. working speed (mm/s)	500											450	400	350	300

Y-axis stroke (mm)	50	100	150	200	250	300
H	313	363	413	463	513	563
Max. working speed (mm/s)	500					
Max. load capacity (kg)	4.5	3.5		2.5		1.5

List of attachments

[Motor mounting parts]

Model No.	Mounted motor specification	Motor mounting direction	Mounting parts	Shipment method	Motor capacity	Motor mounting bolt	
ETS-06	M	E	Coupling	Assembled at shipment	100 W	M4	2
	Y					M4	2
ETS-05	P	R, L	Timing belt, pulley	Included at shipment		M3	4

*When "O" is selected for Mounted motor specification, the motor specification code for the 1st and 2nd axes is "M" or "P".

[Origin sensor/Limit sensor]

Manufacturer	Model	Quantity
OMRON Corporation	EE-SX672	6

*Refer to page 156 for sensor specifications.

[Other attachments for axis combinations]

Cableveyor, axis combination bracket

Dimensions

● ETS-210A4

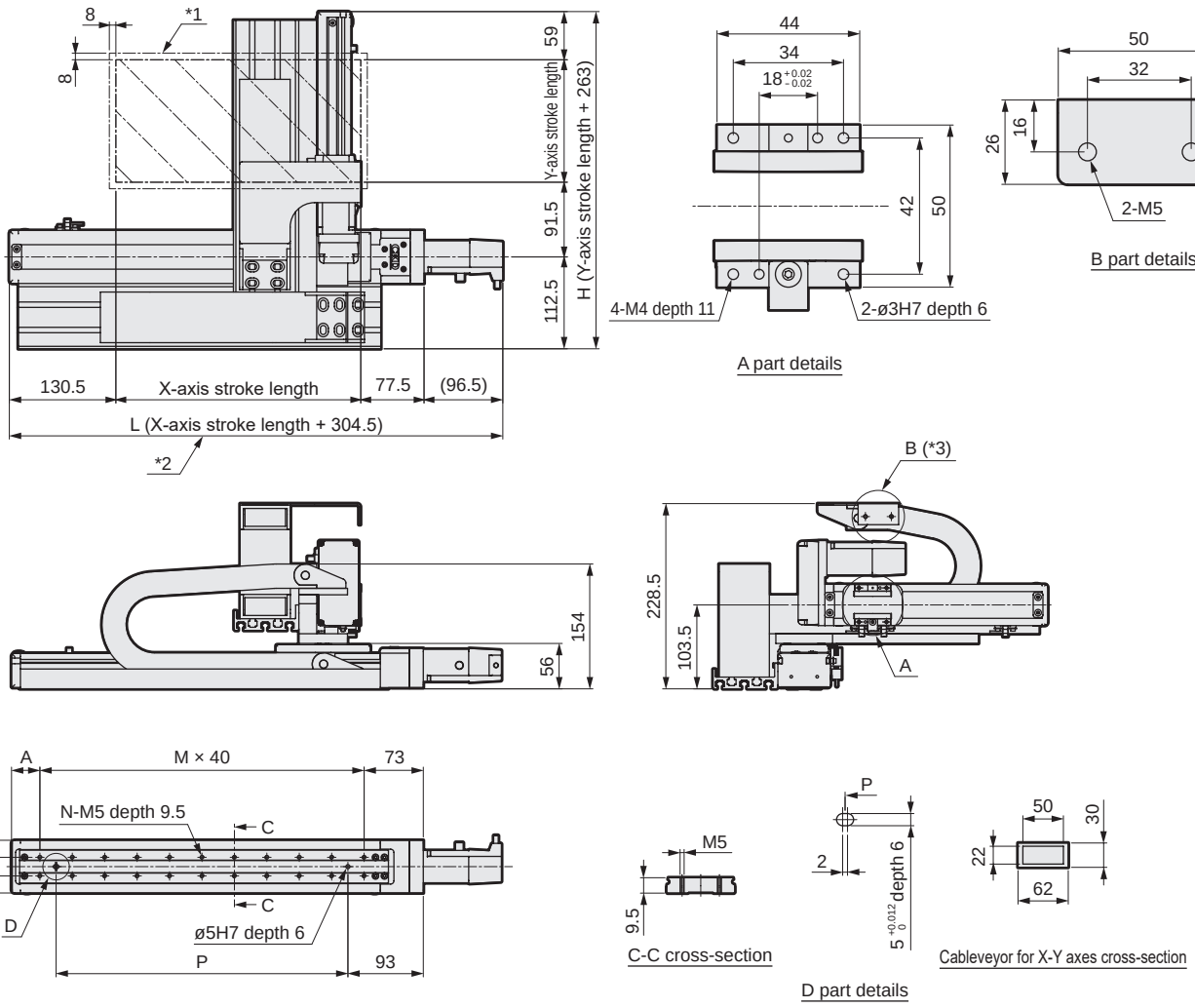

*1: Stops within the moving range and this range when returning to origin.
*2: The length of the L-axis changes depending on the manufacturer of the motor installed.
*3: Fix the end of the Y-axis cableveyor on site.

*This figure shows the dimensions when combined.

X-axis stroke (mm)	100	150	200	250	300	350	400	450	500	550	600	650	700	750	800
L	404.5	454.5	505.4	554.5	604.5	654.5	704.5	754.5	804.5	854.5	904.5	954.5	1004.5	1054.5	1104.5
A	35	45	55	65	35	45	55	65	35	45	55	65	35	45	55
M	5	6	7	8	9	11	12	13	14	16	17	18	19	21	22
N	12	14	16	18	22	24	26	28	32	34	36	38	42	44	46
P	160	200	240	280	360	400	440	480	560	600	640	680	760	800	840
Max. working speed (mm/s)	500											450	400	350	300

Y-axis stroke (mm)	50	100	150	200	250	300
H	313	363	413	463	513	563
Max. working speed (mm/s)	500					
Max. load capacity (kg)	4.5	3.5		2.5		1.5

List of attachments

[Motor mounting parts]

Model No.	Mounted motor specification	Motor mounting direction	Mounting parts	Shipment method	Motor capacity	Motor mounting bolt	
ETS-06	M	E	Coupling	Assembled at shipment	100 W	M4	2
	Y					M4	2
ETS-05	P	R, L	Timing belt, pulley	Included at shipment		M3	4

*When "O" is selected for Mounted motor specification, the motor specification code for the 1st and 2nd axes is "M" or "P".

[Origin sensor/Limit sensor]

Manufacturer	Model	Quantity
OMRON Corporation	EE-SX672	6

*Refer to page 156 for sensor specifications.

[Other attachments for axis combinations]

Cableveyor, axis combination bracket

MEMO



Electric actuator Ball screw drive Slider

ETS Multi-Axis Series

- Servo motor capacity: 100 W
- 2-axis combination X-Y axes (A type)

RoHS

How to order

ETS - 430 A 1 - 040 030 - M N W

Ⓐ Combined axes

430	ETS-12 × ETS-10

Ⓑ Combination

A	X-Y axes

Ⓒ Combination direction

1 to 4	Confirm the table below.

Ⓓ 1st axis stroke

010 to 105	100 mm to 1050 mm (50 mm pitch)

Ⓔ 2nd axis stroke

005 to 055	50 mm to 550 mm (50 mm pitch)

Ⓕ Mounted motor specification *3

M, Y, P, O	Select the mounted motor specification from the table below.

Ⓖ Brake *1

N	None

Ⓗ Origin/Limit sensor (3 pcs × 2 axes) *2

N	None
W	Yes

*1: The brake targets the 2nd axis.
*2: The user can adjust the sensor position. (Included at shipment)
*3: When "O" is selected for Mounted motor specification, the motor specification code for the 1st and 2nd axes is "M" or "P".

Ⓒ Combination direction

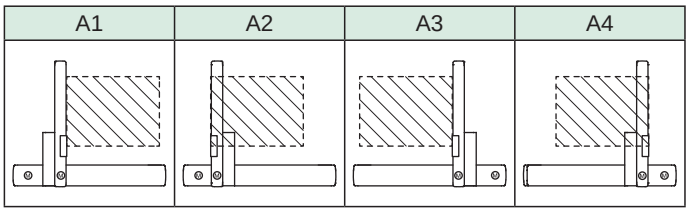

Ⓕ Mounted motor specification

Manufacturer	100 W
Mitsubishi Electric Corporation	M
Delta Electronics Co., Ltd.	M
Sanyo Denki Co., Ltd.	M
YASKAWA Electric Corporation	Y
Keyence Corporation	Y
Panasonic Corporation	P
OMRON Corporation	O

*Refer to page 164 for the motor model No.

Ⓒ Combination direction and motor mounting direction

Combined axes	Combination	Combination direction	Motor mounting direction and motor capacity			
			1st axis		2nd axis	
			Model	100 W	Model	100 W
ETS-430	A	1	ETS-12	B	ETS-10	R
		2		B		L
		3		B		L
		4		B		R

*B: Built-in mount R: Right side mount L: Left side mount
*Motor mounting direction is determined by combination direction.
*Contact CKD when using an OMRON motor.

ⒹⒺ stroke length

Combined axes	Combination	1st axis			2nd axis		
		Model	Screw lead (mm)	Stroke (mm)	Model	Screw lead (mm)	Stroke (mm)
ETS-430	A	ETS-12	20	100 to 1050	ETS-10	20	50 to 550

Grease nipple

Combined axes	Combination	Combination direction	1st axis		2nd axis	
			Model	Grease nipple position	Model	Grease nipple position
ETS-430	A	1	ETS-12	L	ETS-10	R
		2		L		L
		3		R		L
		4		R		R

*R: Right side L: Left side

Dimensions

● ETS-430A1

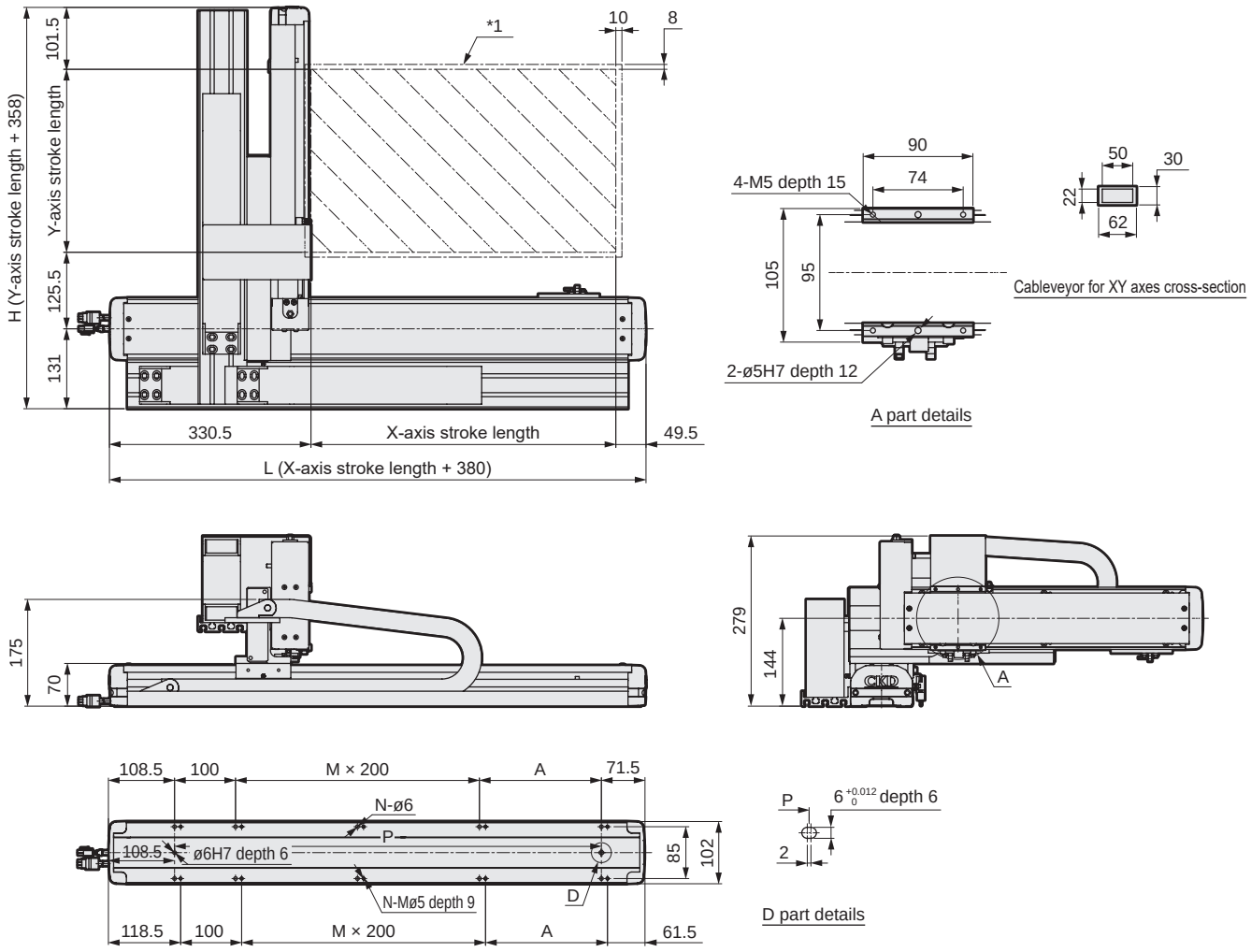

*1: Stops within the moving range and this range when returning to origin.

*This figure shows the dimensions when combined.

X-axis stroke (mm)	100	150	200	250	300	350	400	450	500	550	600	650	700	750	800	850	900	950	1000	1050
L	480	530	580	630	680	730	780	830	880	930	980	1030	1080	1130	1180	1230	1280	1330	1380	1430
A	200	50	100	150	200	50	100	150	200	50	100	150	200	50	100	150	200	50	100	150
M	0	1	1	1	1	2	2	2	2	3	3	3	3	4	4	4	4	5	5	5
N	6	8	8	8	8	10	10	10	10	12	12	12	12	14	14	14	14	16	16	16
P	300	350	400	450	500	550	600	650	700	750	800	850	900	950	1000	1050	1100	1150	1200	1250
Max. working speed (mm/s)	1000														900	800	700	600	500	400

Y-axis stroke (mm)	50	100	150	200	250	300	350	400	450	500	550
H	408	458	508	558	608	658	708	758	808	858	908
Max. working speed (mm/s)	1000										
Max. load capacity (kg)	8	7		6		5		4		3	

List of attachments

[Motor mounting parts]

Model No.	Mounted motor specification	Motor mounting direction	Mounting parts	Shipment method	Motor capacity	Motor mounting bolt	
ETS-12	M	B	Coupling	Assembled at shipment	100 W	M4	2
	Y					M4	2
ETS-10	P	R, L	Timing belt, pulley	Included at shipment		M3	4

*When "O" is selected for Mounted motor specification, the motor specification code for the 1st and 2nd axes is "M" or "P".

[Origin sensor/Limit sensor]

Manufacturer	Model	Quantity
OMRON Corporation	EE-SX672	6

*Refer to page 156 for sensor specifications.

[Other attachments for axis combinations]

Cableveyor, axis combination bracket

Dimensions

● ETS-430A2

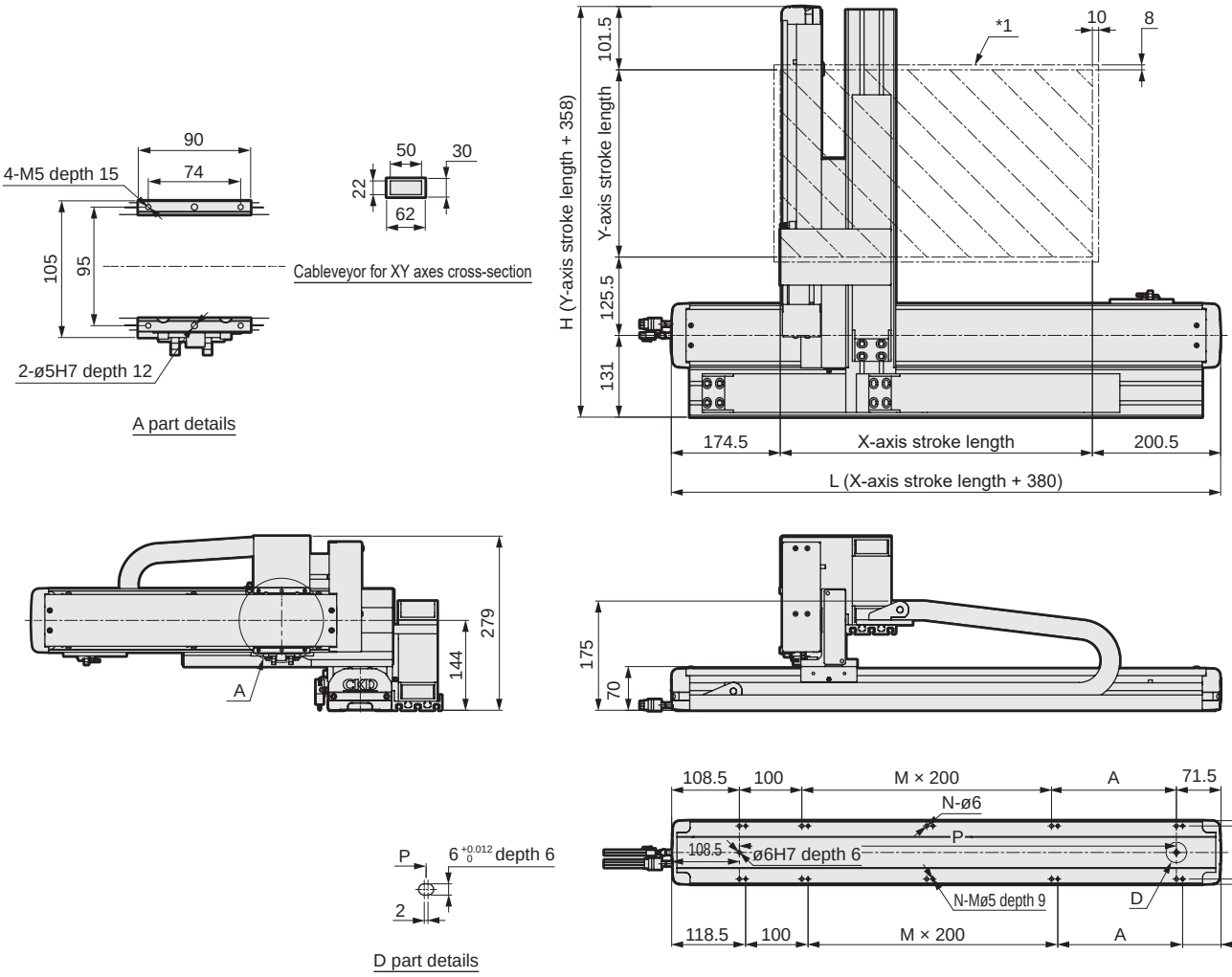

*1: Stops within the moving range and this range when returning to origin.

*This figure shows the dimensions when combined.

X-axis stroke (mm)	100	150	200	250	300	350	400	450	500	550	600	650	700	750	800	850	900	950	1000	1050
L	480	530	580	630	680	730	780	830	880	930	980	1030	1080	1130	1180	1230	1280	1330	1380	1430
A	200	50	100	150	200	50	100	150	200	50	100	150	200	50	100	150	200	50	100	150
M	0	1	1	1	1	2	2	2	2	3	3	3	3	4	4	4	4	5	5	5
N	6	8	8	8	8	10	10	10	10	12	12	12	12	14	14	14	14	16	16	16
P	300	350	400	450	500	550	600	650	700	750	800	850	900	950	1000	1050	1100	1150	1200	1250
Max. working speed (mm/s)	1000														900	800	700	600	500	400

Y-axis stroke (mm)	50	100	150	200	250	300	350	400	450	500	550
H	408	458	508	558	608	658	708	758	808	858	908
Max. working speed (mm/s)	1000										
Max. load capacity (kg)	8	7		6		5		4		3	

List of attachments

[Motor mounting parts]

Model No.	Mounted motor specification	Motor mounting direction	Mounting parts	Shipment method	Motor capacity	Motor mounting bolt	
ETS-12	M	B	Coupling	Assembled at shipment	100 W	M4	2
	Y					M4	2
ETS-10	P	R, L	Timing belt, pulley	Included at shipment		M3	4

*When "O" is selected for Mounted motor specification, the motor specification code for the 1st and 2nd axes is "M" or "P".

[Origin sensor/Limit sensor]

Manufacturer	Model	Quantity
OMRON Corporation	EE-SX672	6

*Refer to page 156 for sensor specifications.

[Other attachments for axis combinations]

Cableveyor, axis combination bracket

Dimensions

● ETS-430A3

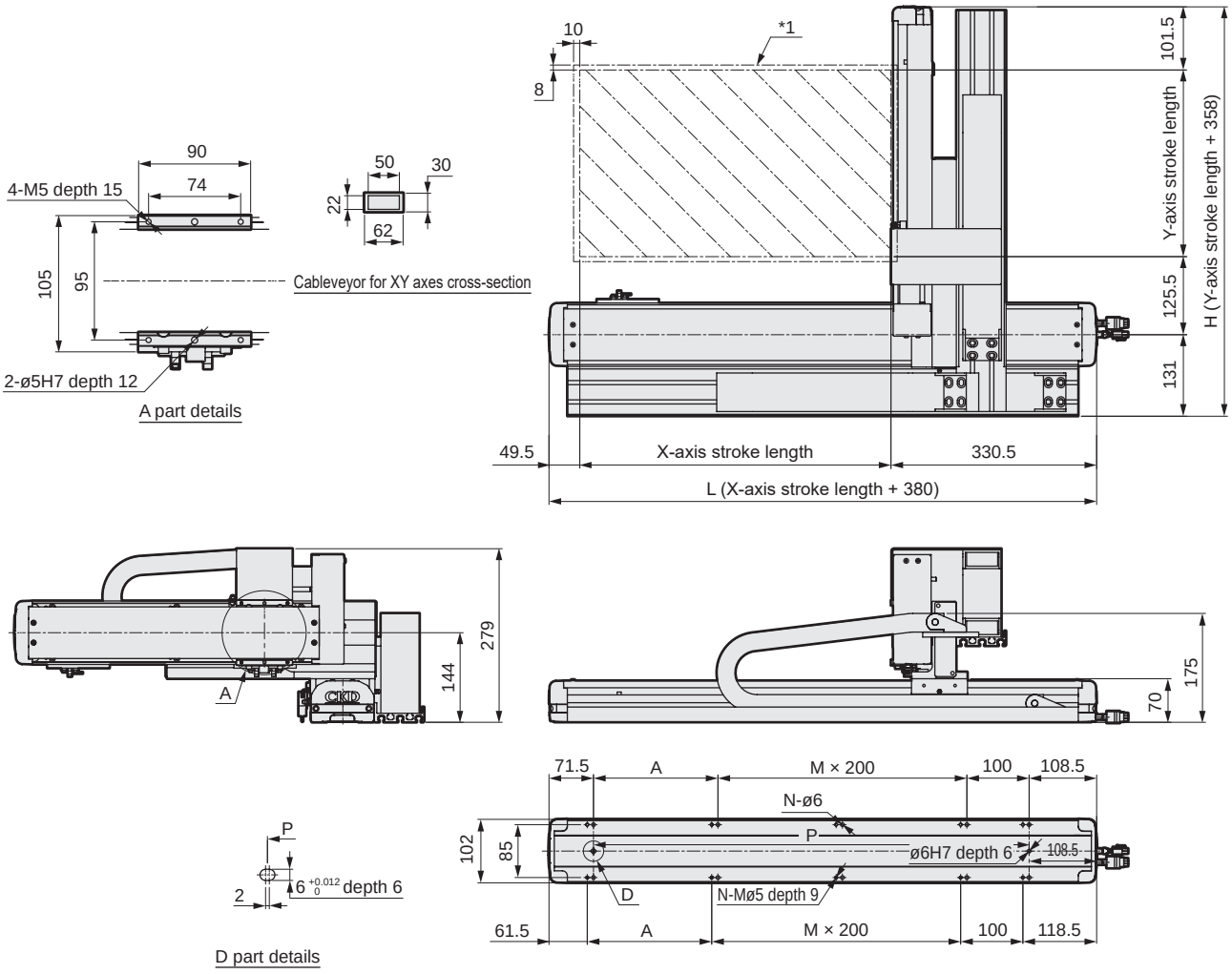

*1: Stops within the moving range and this range when returning to origin.

*This figure shows the dimensions when combined.

X-axis stroke (mm)	100	150	200	250	300	350	400	450	500	550	600	650	700	750	800	850	900	950	1000	1050
L	480	530	580	630	680	730	780	830	880	930	980	1030	1080	1130	1180	1230	1280	1330	1380	1430
A	200	50	100	150	200	50	100	150	200	50	100	150	200	50	100	150	200	50	100	150
M	0	1	1	1	1	2	2	2	2	3	3	3	3	4	4	4	4	5	5	5
N	6	8	8	8	8	10	10	10	10	12	12	12	12	14	14	14	14	16	16	16
P	300	350	400	450	500	550	600	650	700	750	800	850	900	950	1000	1050	1100	1150	1200	1250
Max. working speed (mm/s)	1000														900	800	700	600	500	400

Y-axis stroke (mm)	50	100	150	200	250	300	350	400	450	500	550
H	408	458	508	558	608	658	708	758	808	858	908
Max. working speed (mm/s)	1000										
Max. load capacity (kg)	8	7		6		5		4		3	

List of attachments

[Motor mounting parts]

Model No.	Mounted motor specification	Motor mounting direction	Mounting parts	Shipment method	Motor capacity	Motor mounting bolt	
ETS-12	M	B	Coupling	Assembled at shipment	100 W	M4	2
	Y					M4	2
ETS-10	P	R, L	Timing belt, pulley	Included at shipment		M3	4

*When "O" is selected for Mounted motor specification, the motor specification code for the 1st and 2nd axes is "M" or "P".

[Origin sensor/Limit sensor]

Manufacturer	Model	Quantity
OMRON Corporation	EE-SX672	6

*Refer to page 156 for sensor specifications.

[Other attachments for axis combinations]

Cableveyor, axis combination bracket

Dimensions

● ETS-430A4

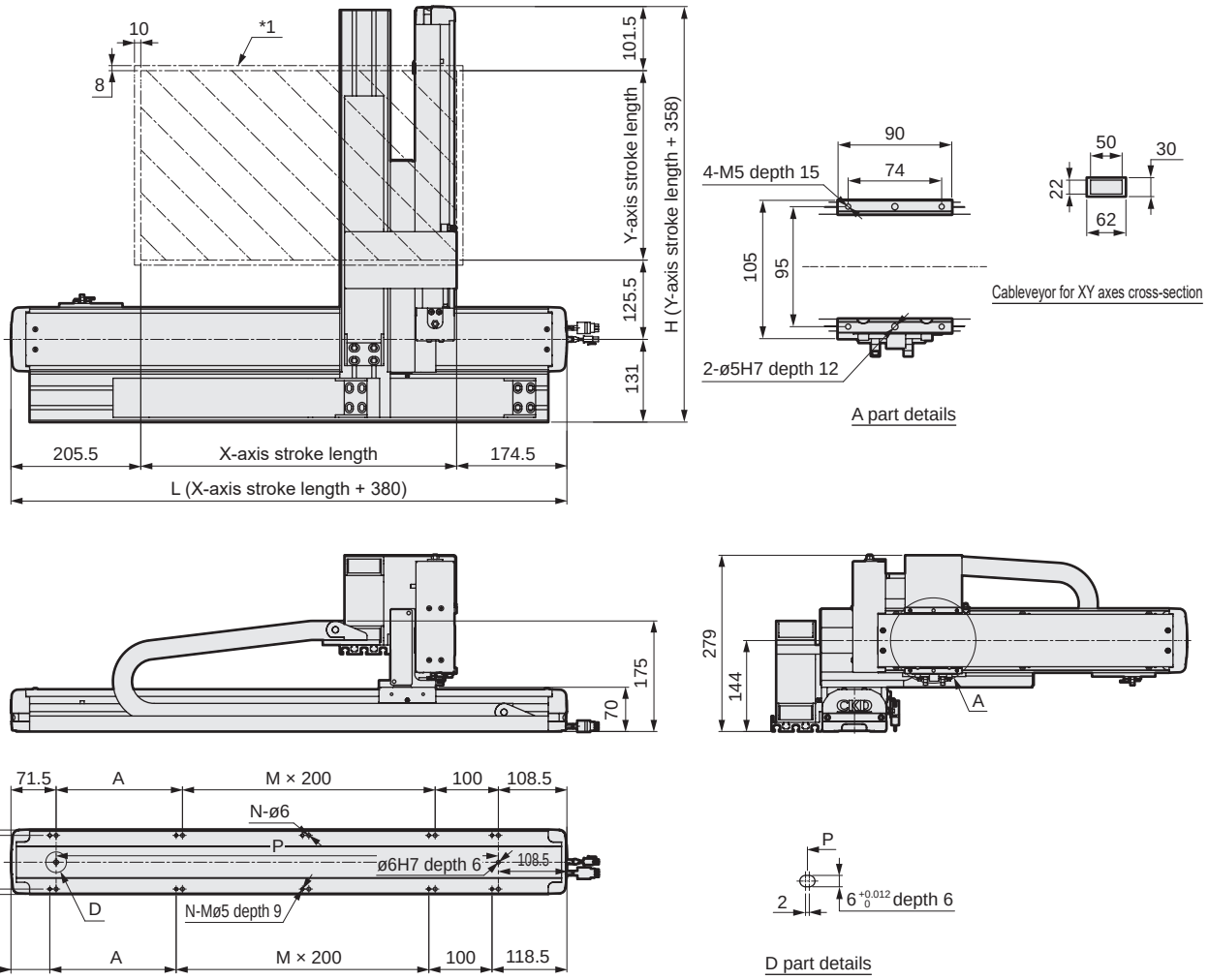

*1: Stops within the moving range and this range when returning to origin.

*This figure shows the dimensions when combined.

X-axis stroke (mm)	100	150	200	250	300	350	400	450	500	550	600	650	700	750	800	850	900	950	1000	1050
L	480	530	580	630	680	730	780	830	880	930	980	1030	1080	1130	1180	1230	1280	1330	1380	1430
A	200	50	100	150	200	50	100	150	200	50	100	150	200	50	100	150	200	50	100	150
M	0	1	1	1	1	2	2	2	2	3	3	3	3	4	4	4	4	5	5	5
N	6	8	8	8	8	10	10	10	10	12	12	12	12	14	14	14	14	16	16	16
P	300	350	400	450	500	550	600	650	700	750	800	850	900	950	1000	1050	1100	1150	1200	1250
Max. working speed (mm/s)	1000														900	800	700	600	500	400

Y-axis stroke (mm)	50	100	150	200	250	300	350	400	450	500	550
H	408	458	508	558	608	658	708	758	808	858	908
Max. working speed (mm/s)	1000										
Max. load capacity (kg)	8	7		6		5		4		3	

List of attachments

[Motor mounting parts]

Model No.	Mounted motor specification	Motor mounting direction	Mounting parts	Shipment method	Motor capacity	Motor mounting bolt	
ETS-12	M	B	Coupling	Assembled at shipment	100 W	M4	2
	Y					M4	2
ETS-10	P	R, L	Timing belt, pulley	Included at shipment		M3	4

*When "O" is selected for Mounted motor specification, the motor specification code for the 1st and 2nd axes is "M" or "P".

[Origin sensor/Limit sensor]

Manufacturer	Model	Quantity
OMRON Corporation	EE-SX672	6

*Refer to page 156 for sensor specifications.

[Other attachments for axis combinations]

Cableveyor, axis combination bracket

MEMO



Electric actuator Ball screw drive Slider

ETS Multi-Axis Series

- Servo motor capacity: 100 W
- 2-axis combination X-Y axes (A type)

RoHS

How to order

ETS - 440 A 1 - 040 030 - M N W

Ⓐ Combined axes

440	ETS-12 × ETS-12

Ⓑ Combination

A	X-Y axes

Ⓒ Combination direction

1 to 4	Confirm the table below.

Ⓓ 1st axis stroke

010 to 105	100 mm to (50 mm pitch) 1050 mm

Ⓔ 2nd axis stroke

005 to 055	50 mm to (50 mm pitch) 550 mm

Ⓕ Mounted motor specification *3

M, Y, P, O	Select the mounted motor specification from the table below.

Ⓖ Brake *1

N	None

Ⓗ Origin/Limit sensor (3 pcs × 2 axes) *2

N	None
W	Yes

*1: The brake targets the 2nd axis.
*2: The user can adjust the sensor position. (Included at shipment)
*3: When "O" is selected for Mounted motor specification, the motor specification code for the 1st and 2nd axes is "M" or "P".

Ⓒ Combination direction

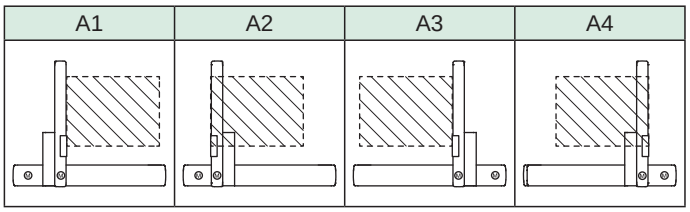

Ⓕ Mounted motor specification

Manufacturer	100 W
Mitsubishi Electric Corporation	M
Delta Electronics Co., Ltd.	M
Sanyo Denki Co., Ltd.	M
YASKAWA Electric Corporation	Y
Keyence Corporation	Y
Panasonic Corporation	P
OMRON Corporation	O

*Refer to page 164 for the recommended motor model No.

Ⓒ Combination direction and motor mounting direction

Combined axes	Combination	Combination direction	Motor mounting direction and motor capacity			
			1st axis		2nd axis	
			Model	100 W	Model	100 W
ETS-440	A	1	ETS-12	B	ETS-12	R
		2		B		L
		3		B		L
		4		B		R

*B: Built-in mount R: Right side mount L: Left side mount
*Motor mounting direction is determined by combination direction.
*Contact CKD when using an OMRON motor.

ⒹⒺ stroke length

Combined axes	Combination	1st axis			2nd axis		
		Model	Screw lead (mm)	Stroke (mm)	Model	Screw lead (mm)	Stroke (mm)
ETS-440	A	ETS-12	20	100 to 1050	ETS-12	20	50 to 550

Grease nipple

Combined axes	Combination	Combination direction	1st axis		2nd axis	
			Model	Grease nipple position	Model	Grease nipple position
ETS-440	A	1	ETS-12	L	ETS-12	R
		2		L		L
		3		R		L
		4		R		R

*R: Right side L: Left side

Dimensions

ETS-440A1

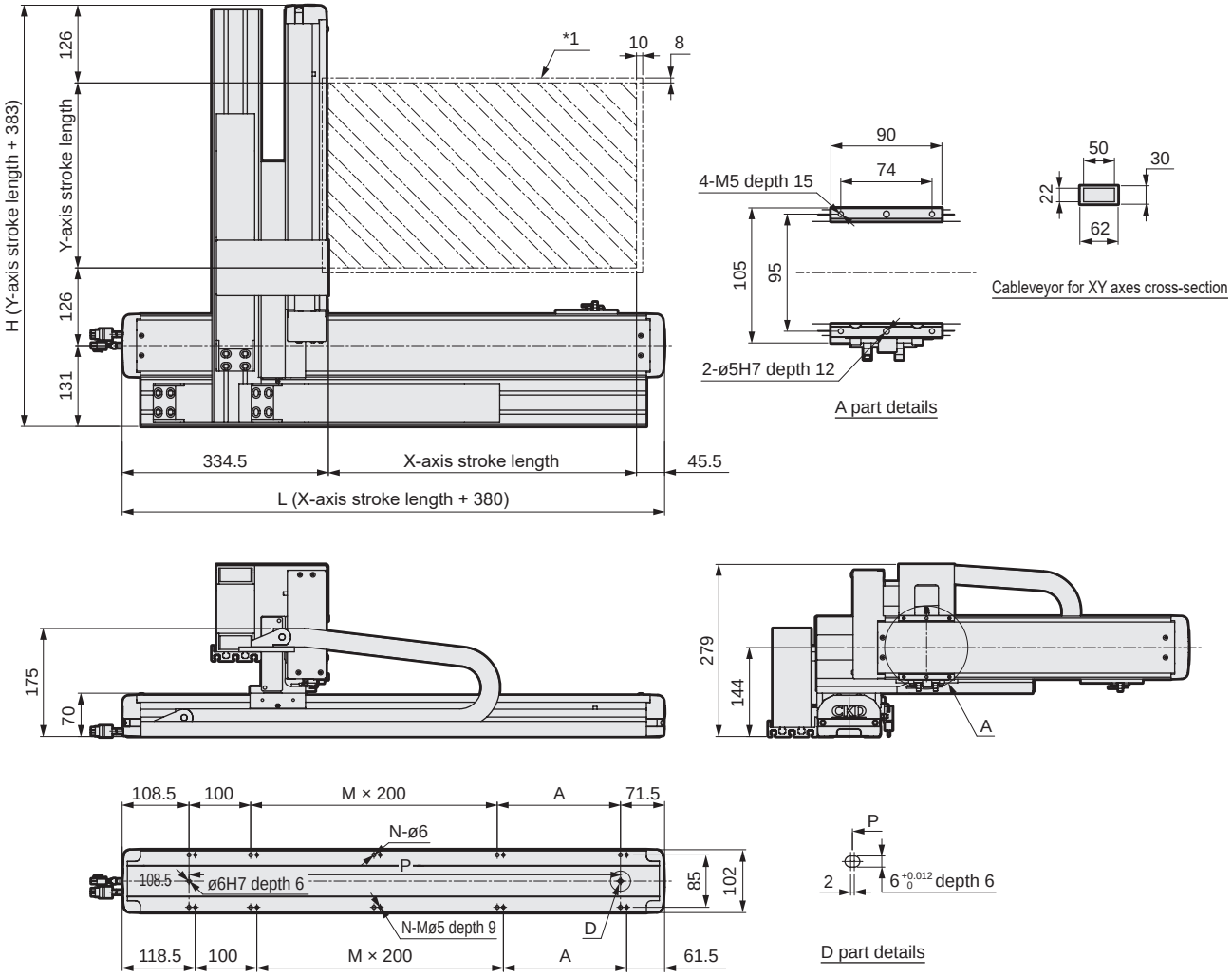

*1: Stops within the moving range and this range when returning to origin.

*This figure shows the dimensions when combined.

X-axis stroke (mm)	100	150	200	250	300	350	400	450	500	550	600	650	700	750	800	850	900	950	1000	1050
L	480	530	580	630	680	730	780	830	880	930	980	1030	1080	1130	1180	1230	1280	1330	1380	1430
A	200	50	100	150	200	50	100	150	200	50	100	150	200	50	100	150	200	50	100	150
M	0	1	1	1	1	2	2	2	2	3	3	3	3	4	4	4	4	5	5	5
N	6	8	8	8	8	10	10	10	10	12	12	12	12	14	14	14	14	16	16	16
P	300	350	400	450	500	550	600	650	700	750	800	850	900	950	1000	1050	1100	1150	1200	1250
Max. working speed (mm/s)	1000														900	800	700	600	500	400

Y-axis stroke (mm)	50	100	150	200	250	300	350	400	450	500	550
H	433	483	533	583	633	683	733	783	833	883	933
Max. working speed (mm/s)	1000										
Max. load capacity (kg)	12	11		10		9		8		7	

List of attachments

[Motor mounting parts]

Model No.	Mounted motor specification	Motor mounting direction	Mounting parts	Shipment method	Motor capacity	Motor mounting bolt	
ETS-12	M	B	Coupling	Assembled at shipment	100 W	M4	2
	Y					M4	2
	P	R, L	Timing belt, pulley	Included at shipment		M3	4

*When "O" is selected for Mounted motor specification, the motor specification code for the 1st and 2nd axes is "M" or "P".

[Origin sensor/Limit sensor]

Manufacturer	Model	Quantity
OMRON Corporation	EE-SX672	6

*Refer to page 156 for sensor specifications.

[Other attachments for axis combinations]

Cableveyor, axis combination bracket

Dimensions

● ETS-440A2

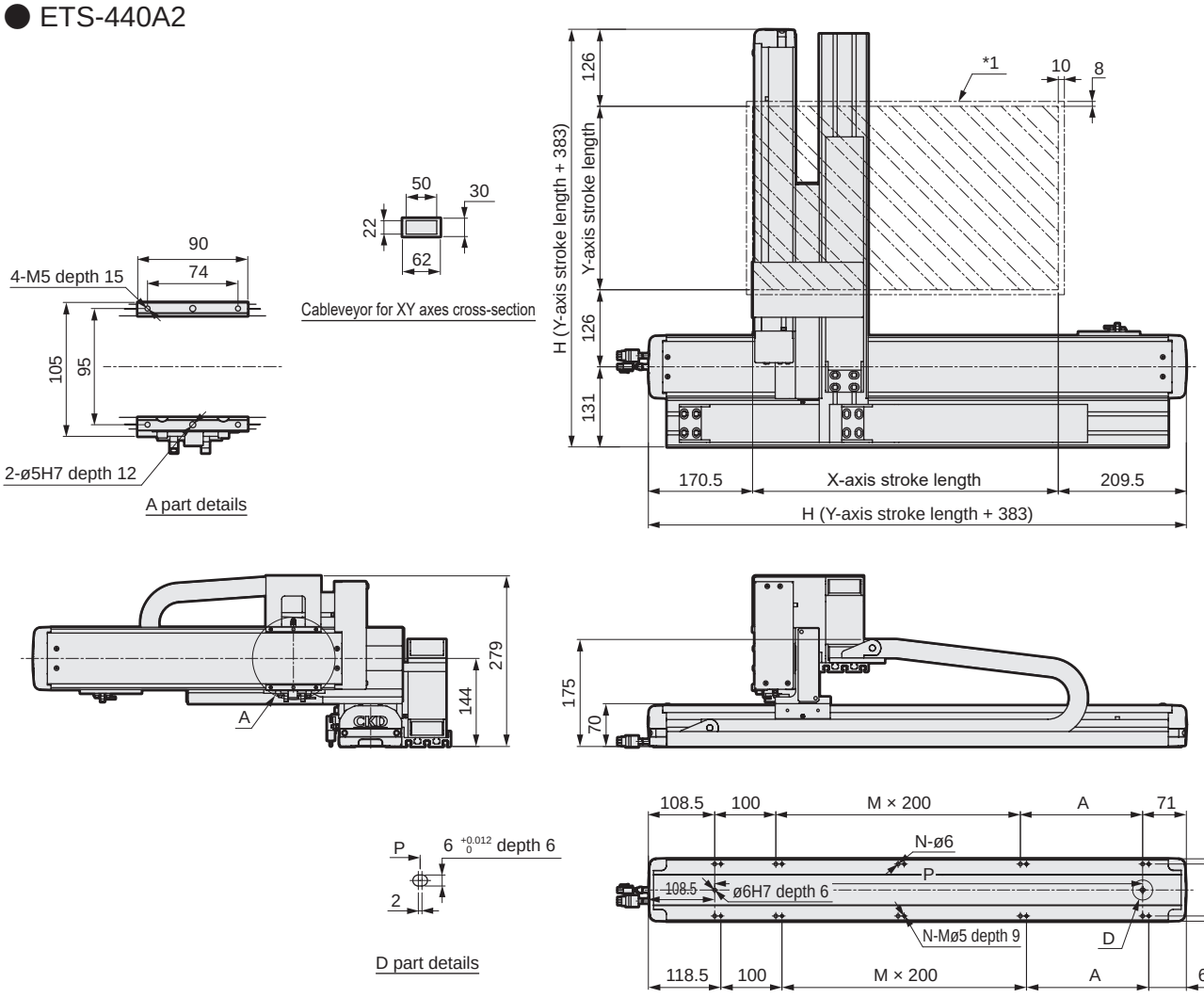

*1: Stops within the moving range and this range when returning to origin.

*This figure shows the dimensions when combined.

X-axis stroke (mm)	100	150	200	250	300	350	400	450	500	550	600	650	700	750	800	850	900	950	1000	1050
L	480	530	580	630	680	730	780	830	880	930	980	1030	1080	1130	1180	1230	1280	1330	1380	1430
A	200	50	100	150	200	50	100	150	200	50	100	150	200	50	100	150	200	50	100	150
M	0	1	1	1	1	2	2	2	2	3	3	3	3	4	4	4	4	5	5	5
N	6	8	8	8	8	10	10	10	10	12	12	12	12	14	14	14	14	16	16	16
P	300	350	400	450	500	550	600	650	700	750	800	850	900	950	1000	1050	1100	1150	1200	1250
Max. working speed (mm/s)	1000														900	800	700	600	500	400

Y-axis stroke (mm)	50	100	150	200	250	300	350	400	450	500	550
H	433	483	533	583	633	683	733	783	833	883	933
Max. working speed (mm/s)	1000										
Max. load capacity (kg)	12	11		10		9		8		7	

List of attachments

[Motor mounting parts]

Model No.	Mounted motor specification	Motor mounting direction	Mounting parts	Shipment method	Motor capacity	Motor mounting bolt	
ETS-12	M	B	Coupling	Assembled at shipment	100 W	M4	2
	Y					M4	2
	P	R, L	Timing belt, pulley	Included at shipment		M3	4

*When "O" is selected for Mounted motor specification, the motor specification code for the 1st and 2nd axes is "M" or "P".

[Origin sensor/Limit sensor]

Manufacturer	Model	Quantity
OMRON Corporation	EE-SX672	6

*Refer to page 156 for sensor specifications.

[Other attachments for axis combinations]

Cableveyor, axis combination bracket

Dimensions

● ETS-440A3

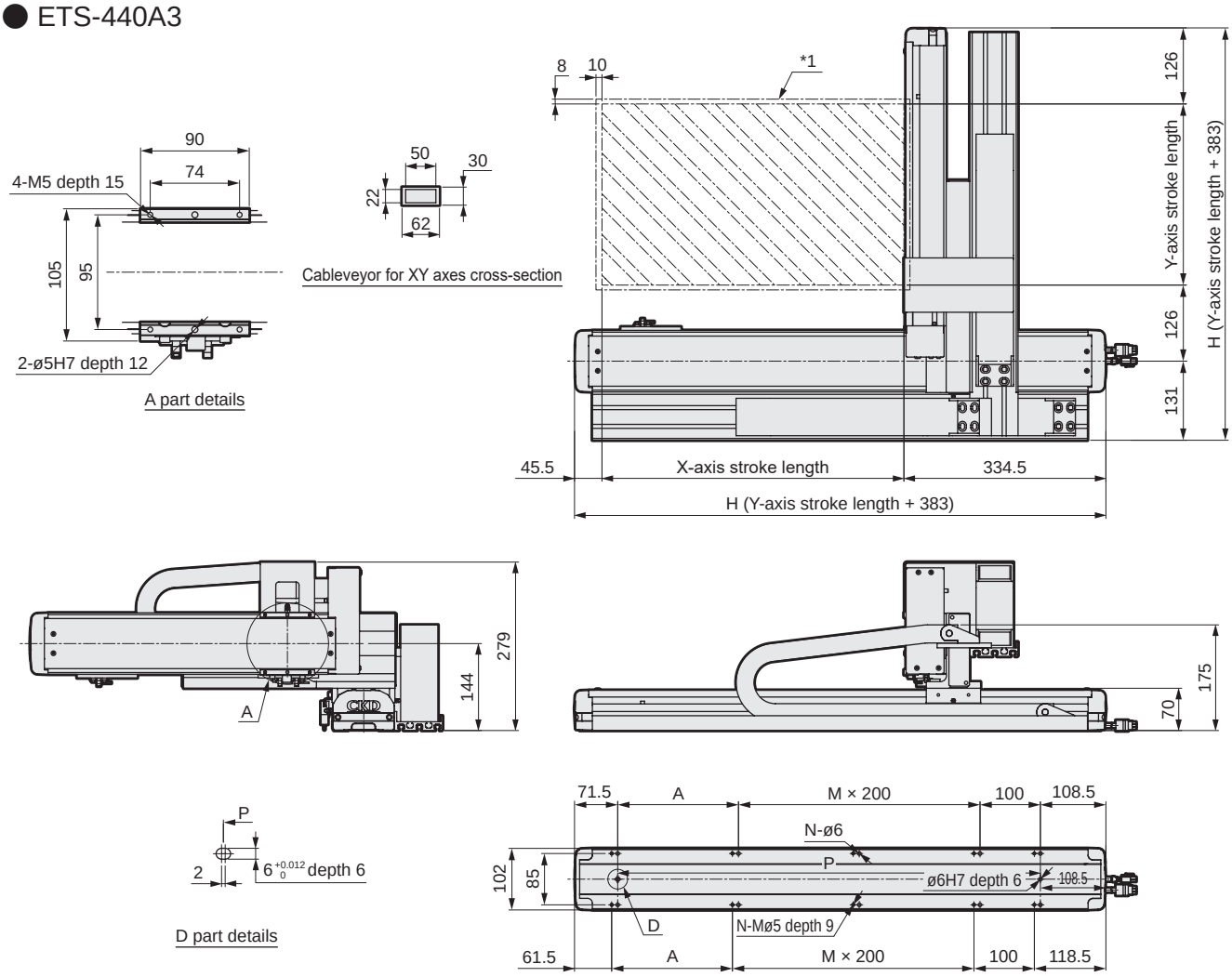

*1: Stops within the moving range and this range when returning to origin.

*This figure shows the dimensions when combined.

X-axis stroke (mm)	100	150	200	250	300	350	400	450	500	550	600	650	700	750	800	850	900	950	1000	1050
L	480	530	580	630	680	730	780	830	880	930	980	1030	1080	1130	1180	1230	1280	1330	1380	1430
A	200	50	100	150	200	50	100	150	200	50	100	150	200	50	100	150	200	50	100	150
M	0	1	1	1	1	2	2	2	2	3	3	3	3	4	4	4	4	5	5	5
N	6	8	8	8	8	10	10	10	10	12	12	12	12	14	14	14	14	16	16	16
P	300	350	400	450	500	550	600	650	700	750	800	850	900	950	1000	1050	1100	1150	1200	1250
Max. working speed (mm/s)	1000														900	800	700	600	500	400

Y-axis stroke (mm)	50	100	150	200	250	300	350	400	450	500	550
H	433	483	533	583	633	683	733	783	833	883	933
Max. working speed (mm/s)	1000										
Max. load capacity (kg)	12	11		10		9		8		7	

List of attachments

[Motor mounting parts]

Model No.	Mounted motor specification	Motor mounting direction	Mounting parts	Shipment method	Motor capacity	Motor mounting bolt	
ETS-12	M	B	Coupling	Assembled at shipment	100 W	M4	2
	Y					M4	2
	P	R, L	Timing belt, pulley	Included at shipment		M3	4

*When "O" is selected for Mounted motor specification, the motor specification code for the 1st and 2nd axes is "M" or "P".

[Origin sensor/Limit sensor]

Manufacturer	Model	Quantity
OMRON Corporation	EE-SX672	6

*Refer to page 156 for sensor specifications.

[Other attachments for axis combinations]

Cableveyor, axis combination bracket

Dimensions

ETS-440A4

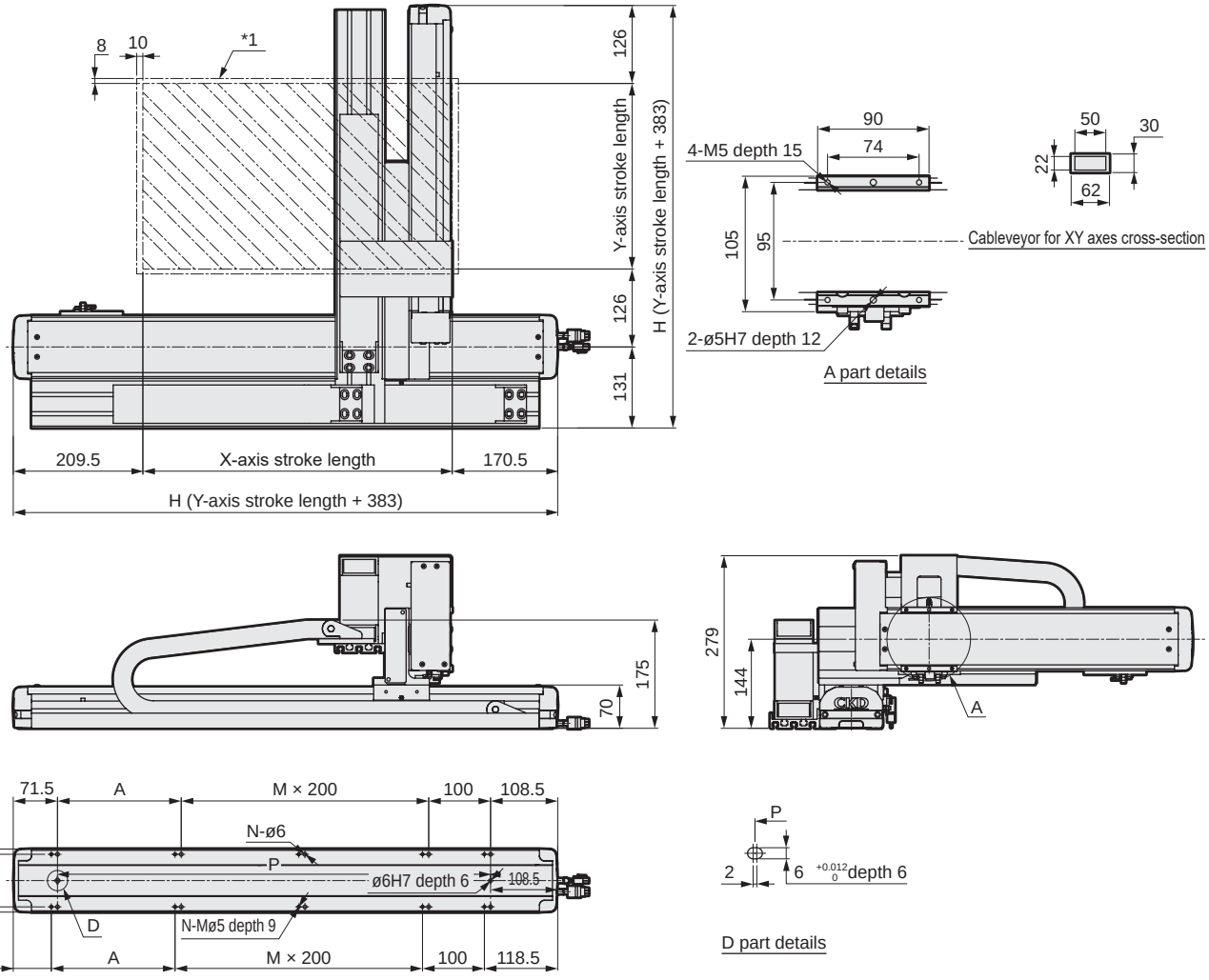

*1: Stops within the moving range and this range when returning to origin.

*This figure shows the dimensions when combined.

X-axis stroke (mm)	100	150	200	250	300	350	400	450	500	550	600	650	700	750	800	850	900	950	1000	1050
L	480	530	580	630	680	730	780	830	880	930	980	1030	1080	1130	1180	1230	1280	1330	1380	1430
A	200	50	100	150	200	50	100	150	200	50	100	150	200	50	100	150	200	50	100	150
M	0	1	1	1	1	2	2	2	2	3	3	3	3	4	4	4	4	5	5	5
N	6	8	8	8	8	10	10	10	10	12	12	12	12	14	14	14	14	16	16	16
P	300	350	400	450	500	550	600	650	700	750	800	850	900	950	1000	1050	1100	1150	1200	1250
Max. working speed (mm/s)	1000														900	800	700	600	500	400

Y-axis stroke (mm)	50	100	150	200	250	300	350	400	450	500	550
H	433	483	533	583	633	683	733	783	833	883	933
Max. working speed (mm/s)	1000										
Max. load capacity (kg)	12	11		10		9		8		7	

List of attachments

[Motor mounting parts]

Model No.	Mounted motor specification	Motor mounting direction	Mounting parts	Shipment method	Motor capacity	Motor mounting bolt	
ETS-12	M	B	Coupling	Assembled at shipment	100 W	M4	2
	Y					M4	2
	P	R, L	Timing belt, pulley	Included at shipment		M3	4

*When "O" is selected for Mounted motor specification, the motor specification code for the 1st and 2nd axes is "M" or "P".

[Origin sensor/Limit sensor]

Manufacturer	Model	Quantity
OMRON Corporation	EE-SX672	6

*Refer to page 156 for sensor specifications.

[Other attachments for axis combinations]

Cableveyor, axis combination bracket

MEMO



Electric actuator Ball screw drive Slider

ETS Multi-Axis Series

- Servo motor capacity: 400 W/200 W
- 2-axis combination X-Y axes (A type)

RoHS

How to order

ETS - 650 A 1 - 040 030 - M N W

Ⓐ Combined axes

650	ETS-14 × ETS-13

Ⓑ Combination

A	X-Y axes

Ⓒ Combination direction

1 to 4	Confirm the table below.

Ⓓ 1st axis stroke

010 to 105	100 mm to 1050 mm (50 mm pitch)

Ⓔ 2nd axis stroke

005 to 065	50 mm to 650 mm (50 mm pitch)

Ⓕ Mounted motor specification *3

M, Y, P, O	Select the mounted motor specification from the table below.

Ⓖ Brake *1

N	None

Ⓗ Origin/Limit sensor (3 pcs × 2 axes) *2

N	None
W	Yes

*1: The brake targets the 2nd axis.
*2: The user can adjust the sensor position. (Included at shipment)
*3: When "O" is selected for Mounted motor specification, the motor specification code for the 1st and 2nd axes is "M" or "P".

Ⓒ Combination direction

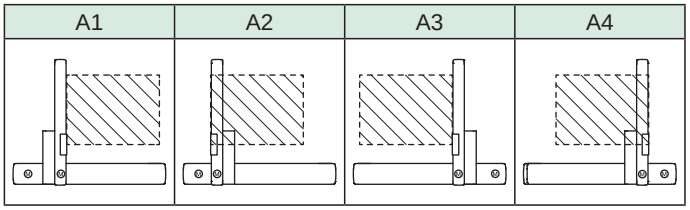

Ⓕ Mounted motor specification

Manufacturer	200 W	400 W
Mitsubishi Electric Corporation	M	M
Delta Electronics Co., Ltd.	M	M
Sanyo Denki Co., Ltd.	M	M
YASKAWA Electric Corporation	Y	Y
Keyence Corporation	Y	Y
Panasonic Corporation	P	P
OMRON Corporation	O	O

*Refer to page 164 for the recommended motor model No.

Ⓒ Combination direction and motor mounting direction

Combined axes	Combination	Combination direction	Motor mounting direction and motor capacity			
			1st axis		2nd axis	
			Model	400 W	Model	200 W
ETS-650	A	1	ETS-14	B	ETS-13	B
		2		B		B
		3		B		B
		4		B		B

*B: Built-in mount

ⒹⒺ stroke length

Combined axes	Combination	1st axis			2nd axis		
		Model	Screw lead (mm)	Stroke (mm)	Model	Screw lead (mm)	Stroke (mm)
ETS-650	A	ETS-14	20	100 to 1050	ETS-13	20	50 to 650

Grease nipple

Combined axes	Combination	Combination direction	1st axis		2nd axis	
			Model	Grease nipple position	Model	Grease nipple position
ETS-650	A	1	ETS-14	L	ETS-13	R
		2		L		L
		3		R		L
		4		R		R

Dimensions

● ETS-650A1

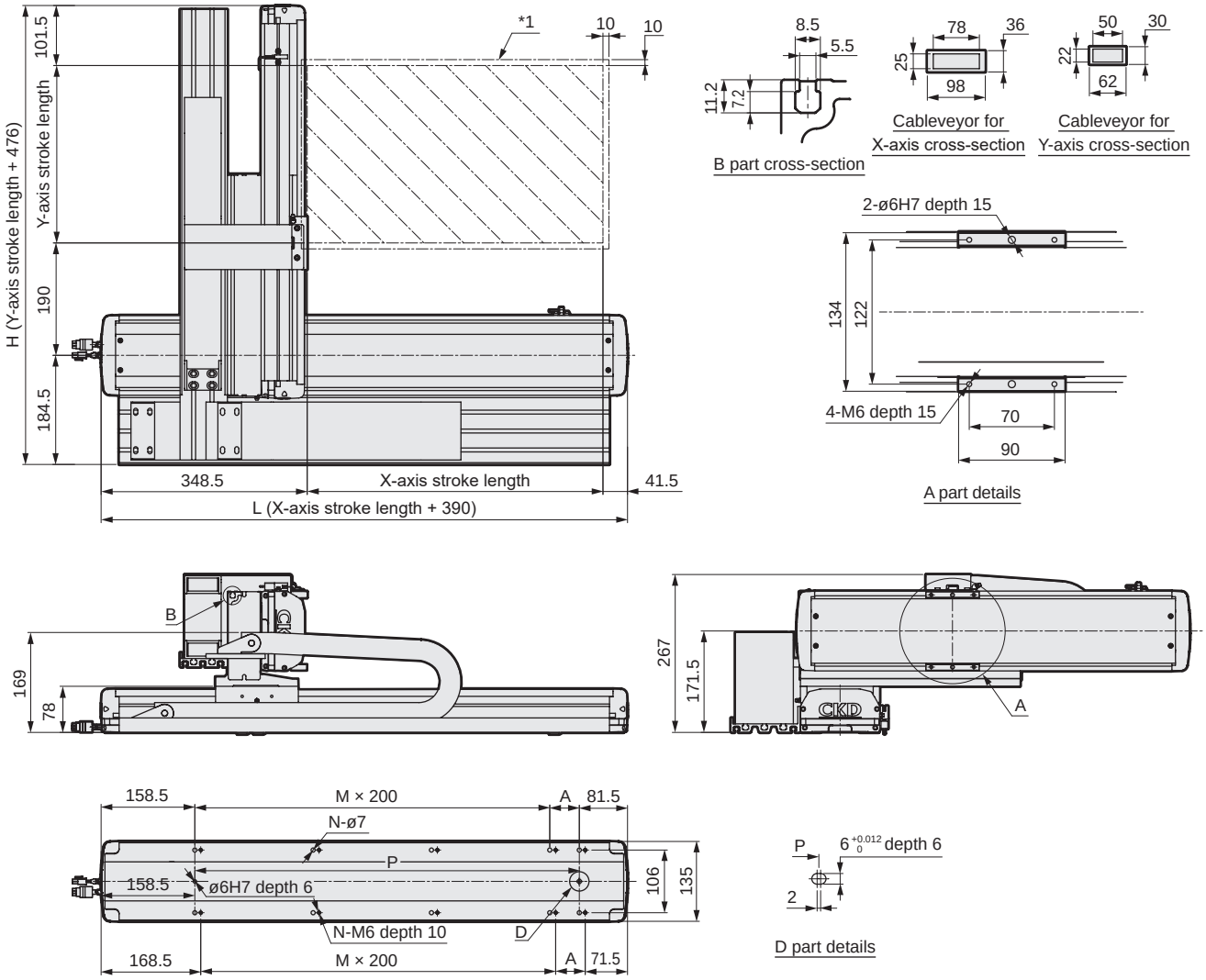

*1: Stops within the moving range and this range when returning to origin.

*This figure shows the dimensions when combined.

X-axis stroke (mm)	100	150	200	250	300	350	400	450	500	550	600	650	700	750	800	850	900	950	1000	1050
L	490	540	590	640	690	740	790	840	890	940	990	1040	1090	1140	1190	1240	1290	1340	1390	1440
A	50	100	150	200	50	100	150	200	50	100	150	200	50	100	150	200	50	100	150	200
M	1	1	1	1	2	2	2	2	3	3	3	3	4	4	4	4	5	5	5	5
N	6	6	6	6	8	8	8	8	10	10	10	10	12	12	12	12	14	14	14	14
P	250	300	350	400	450	500	550	600	650	700	750	800	850	900	950	1000	1050	1100	1150	1200
Max. working speed (mm/s)	1000														900	800	700	600	500	400

Y-axis stroke (mm)	50	100	150	200	250	300	350	400	450	500	550	600	650
H	526	576	626	676	726	776	826	876	926	976	1026	1076	1126
Max. working speed (mm/s)	1000												
Max. load capacity (kg)	24	20		17		15		13		11		9	

List of attachments

[Motor mounting parts]

Model No.	Mounted motor specification	Motor mounting direction	Mounting parts	Shipment method	Motor capacity	Motor mounting bolt	
ETS-14	M	B	Coupling	Assembled at shipment	400 W	M5	4
	Y					M5	4
ETS-13	P				200 W	M4	4

*When "O" is selected for Mounted motor specification, the motor specification code for the 1st and 2nd axes is "M" or "P".

[Origin sensor/Limit sensor]

Manufacturer	Model	Quantity
OMRON Corporation	EE-SX672	6

*Refer to page 156 for sensor specifications.

[Other attachments for axis combinations]

Cableveyor, axis combination bracket

Dimensions

● ETS-650A2

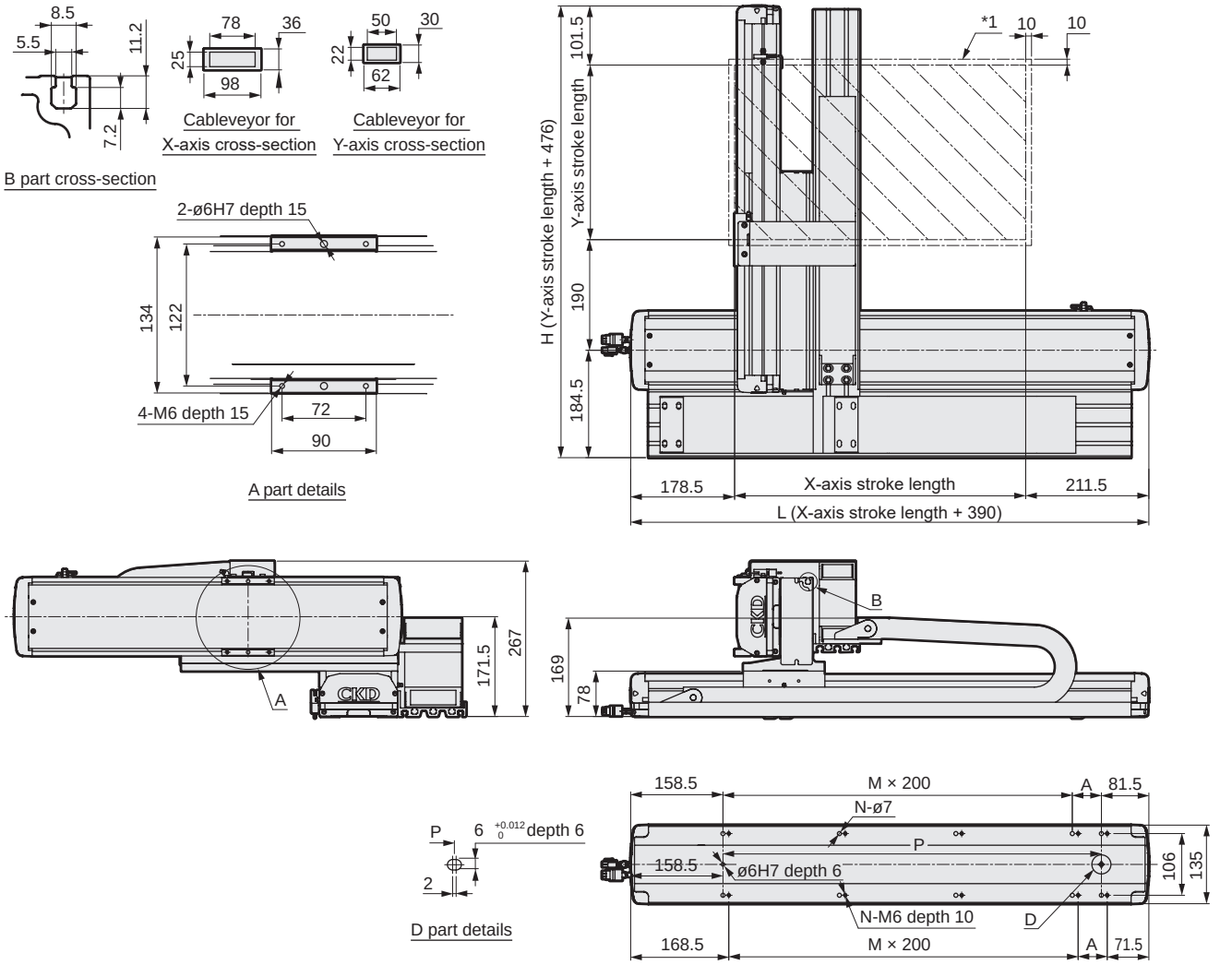

*1: Stops within the moving range and this range when returning to origin.

*This figure shows the dimensions when combined.

X-axis stroke (mm)	100	150	200	250	300	350	400	450	500	550	600	650	700	750	800	850	900	950	1000	1050
L	490	540	590	640	690	740	790	840	890	940	990	1040	1090	1140	1190	1240	1290	1340	1390	1440
A	50	100	150	200	50	100	150	200	50	100	150	200	50	100	150	200	50	100	150	200
M	1	1	1	1	2	2	2	2	3	3	3	3	4	4	4	4	5	5	5	5
N	6	6	6	6	8	8	8	8	10	10	10	10	12	12	12	12	14	14	14	14
P	250	300	350	400	450	500	550	600	650	700	750	800	850	900	950	1000	1050	1100	1150	1200
Max. working speed (mm/s)	1000														900	800	700	600	500	400

Y-axis stroke (mm)	50	100	150	200	250	300	350	400	450	500	550	600	650
H	526	576	626	676	726	776	826	876	926	976	1026	1076	1126
Max. working speed (mm/s)	1000												
Max. load capacity (kg)	24	20		17		15		13		11		9	

List of attachments

[Motor mounting parts]

Model No.	Mounted motor specification	Motor mounting direction	Mounting parts	Shipment method	Motor capacity	Motor mounting bolt	
ETS-14	M	B	Coupling	Assembled at shipment	400 W	M5	4
	Y					M5	4
ETS-13	P				200 W	M4	4

*When "O" is selected for Mounted motor specification, the motor specification code for the 1st and 2nd axes is "M" or "P".

[Origin sensor/Limit sensor]

Manufacturer	Model	Quantity
OMRON Corporation	EE-SX672	6

*Refer to page 156 for sensor specifications.

[Other attachments for axis combinations]

Cableveyor, axis combination bracket

Dimensions

ETS-650A3

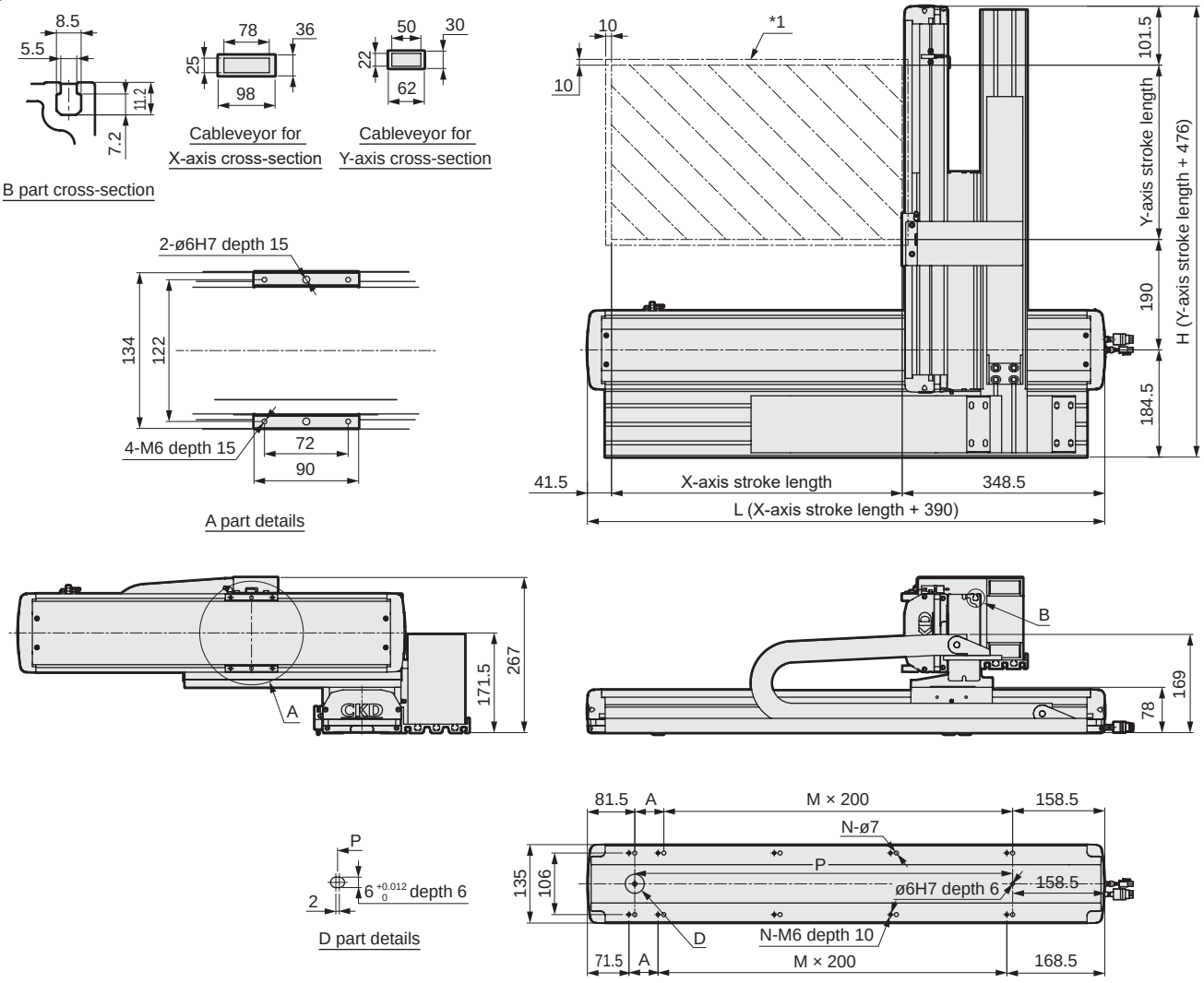

*1: Stops within the moving range and this range when returning to origin.

*This figure shows the dimensions when combined.

X-axis stroke (mm)	100	150	200	250	300	350	400	450	500	550	600	650	700	750	800	850	900	950	1000	1050
L	490	540	590	640	690	740	790	840	890	940	990	1040	1090	1140	1190	1240	1290	1340	1390	1440
A	50	100	150	200	50	100	150	200	50	100	150	200	50	100	150	200	50	100	150	200
M	1	1	1	1	2	2	2	2	3	3	3	3	4	4	4	4	5	5	5	5
N	6	6	6	6	8	8	8	8	10	10	10	10	12	12	12	12	14	14	14	14
P	250	300	350	400	450	500	550	600	650	700	750	800	850	900	950	1000	1050	1100	1150	1200
Max. working speed (mm/s)	1000														900	800	700	600	500	400

Y-axis stroke (mm)	50	100	150	200	250	300	350	400	450	500	550	600	650
H	526	576	626	676	726	776	826	876	926	976	1026	1076	1126
Max. working speed (mm/s)	1000												
Max. load capacity (kg)	24	20		17		15		13		11		9	

List of attachments

[Motor mounting parts]

Model No.	Mounted motor specification	Motor mounting direction	Mounting parts	Shipment method	Motor capacity	Motor mounting bolt	
ETS-14	M	B	Coupling	Assembled at shipment	400 W	M5	4
	Y					M5	4
ETS-13	P				200 W	M4	4

*When "O" is selected for Mounted motor specification, the motor specification code for the 1st and 2nd axes is "M" or "P".

[Origin sensor/Limit sensor]

Manufacturer	Model	Quantity
OMRON Corporation	EE-SX672	6

*Refer to page 156 for sensor specifications.

[Other attachments for axis combinations]

Cableveyor, axis combination bracket

Dimensions

ETS-650A4

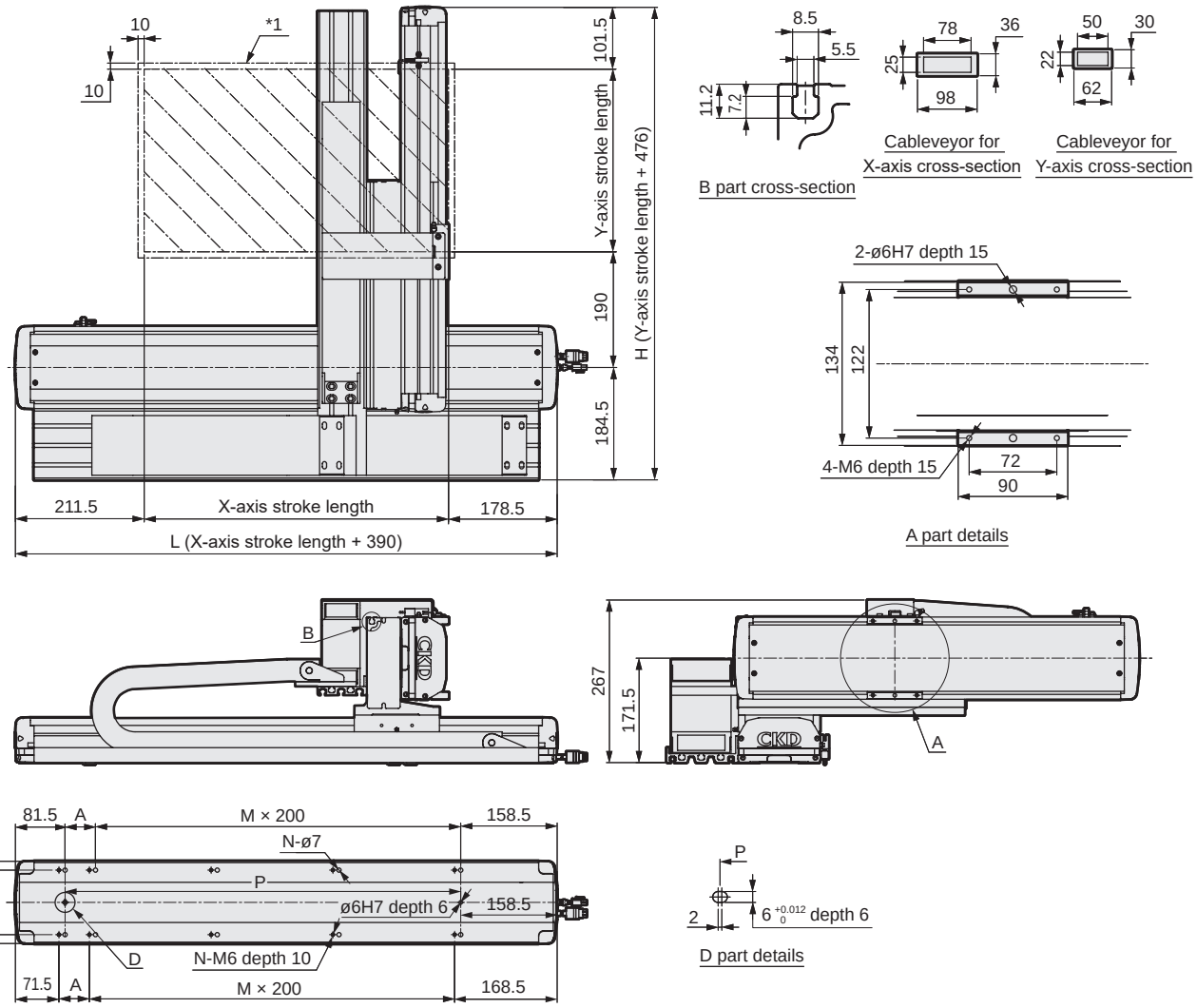

*1: Stops within the moving range and this range when returning to origin.

*This figure shows the dimensions when combined.

X-axis stroke (mm)	100	150	200	250	300	350	400	450	500	550	600	650	700	750	800	850	900	950	1000	1050
L	490	540	590	640	690	740	790	840	890	940	990	1040	1090	1140	1190	1240	1290	1340	1390	1440
A	50	100	150	200	50	100	150	200	50	100	150	200	50	100	150	200	50	100	150	200
M	1	1	1	1	2	2	2	2	3	3	3	3	4	4	4	4	5	5	5	5
N	6	6	6	6	8	8	8	8	10	10	10	10	12	12	12	12	14	14	14	14
P	250	300	350	400	450	500	550	600	650	700	750	800	850	900	950	1000	1050	1100	1150	1200
Max. working speed (mm/s)	1000														900	800	700	600	500	400

Y-axis stroke (mm)	50	100	150	200	250	300	350	400	450	500	550	600	650
H	526	576	626	676	726	776	826	876	926	976	1026	1076	1126
Max. working speed (mm/s)	1000												
Max. load capacity (kg)	24	20		17		15		13		11		9	

List of attachments

[Motor mounting parts]

Model No.	Mounted motor specification	Motor mounting direction	Mounting parts	Shipment method	Motor capacity	Motor mounting bolt	
ETS-14	M	B	Coupling	Assembled at shipment	400 W	M5	4
	Y					M5	4
ETS-13	P				200 W	M4	4

*When "O" is selected for Mounted motor specification, the motor specification code for the 1st and 2nd axes is "M" or "P".

[Origin sensor/Limit sensor]

Manufacturer	Model	Quantity
OMRON Corporation	EE-SX672	6

*Refer to page 156 for sensor specifications.

[Other attachments for axis combinations]

Cableveyor, axis combination bracket

MEMO



Electric actuator Ball screw drive Slider

ETS Multi-Axis Series

- Servo motor capacity: 400 W/200 W
- 2-axis combination X-Y axes (A type)

RoHS

How to order

ETS - 760 A 1 - 040 030 - M N W

Ⓐ Combined axes

760	ETS-17 × ETS-14

Ⓑ Combination

A	X-Y axes

Ⓒ Combination direction

1 to 4	Confirm the table below.

Ⓓ 1st axis stroke

010 to 125	100 mm to 1250 mm (50 mm pitch)

Ⓔ 2nd axis stroke

005 to 065	50 mm to 650 mm (50 mm pitch)

Ⓕ Mounted motor specification *3

M, Y, P, O	Select the mounted motor specification from the table below.

Ⓖ Brake *1

N	None

Ⓗ Origin/Limit sensor (3 pcs × 2 axes) *2

N	None
W	Yes

*1: The brake targets the 2nd axis.
*2: The user can adjust the sensor position. (Included at shipment)
*3: When "O" is selected for Mounted motor specification, the motor specification code for the 1st and 2nd axes is "M" or "P".

Ⓒ Combination direction

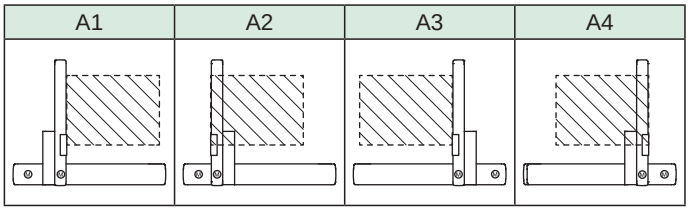

Ⓕ Mounted motor specification

Manufacturer	200 W	400 W
Mitsubishi Electric Corporation	M	M
Delta Electronics Co., Ltd.	M	M
Sanyo Denki Co., Ltd.	M	M
YASKAWA Electric Corporation	Y	Y
Keyence Corporation	Y	Y
Panasonic Corporation	P	P
OMRON Corporation	O	O

*Refer to page 164 for the recommended motor model No.

Ⓒ Combination direction and motor mounting direction

Combined axes	Combination	Combination direction	Motor mounting direction and motor capacity			
			1st axis		2nd axis	
			Model	400 W	Model	200 W
ETS-760	A	1	ETS-17	B	ETS-14	B
		2		B		B
		3		B		B
		4		B		B

*B: Built-in mount

ⒹⒺ stroke length

Combined axes	Combination	1st axis			2nd axis		
		Model	Screw lead (mm)	Stroke (mm)	Model	Screw lead (mm)	Stroke (mm)
ETS-760	A	ETS-17	20	100 to 1250	ETS-14	20	50 to 650

Grease nipple

Combined axes	Combination	Combination direction	1st axis		2nd axis	
			Model	Grease nipple position	Model	Grease nipple position
ETS-760	A	1	ETS-17	L	ETS-14	R
		2		L		L
		3		R		L
		4		R		R

*R: Right side L: Left side

Dimensions

● ETS-760A1

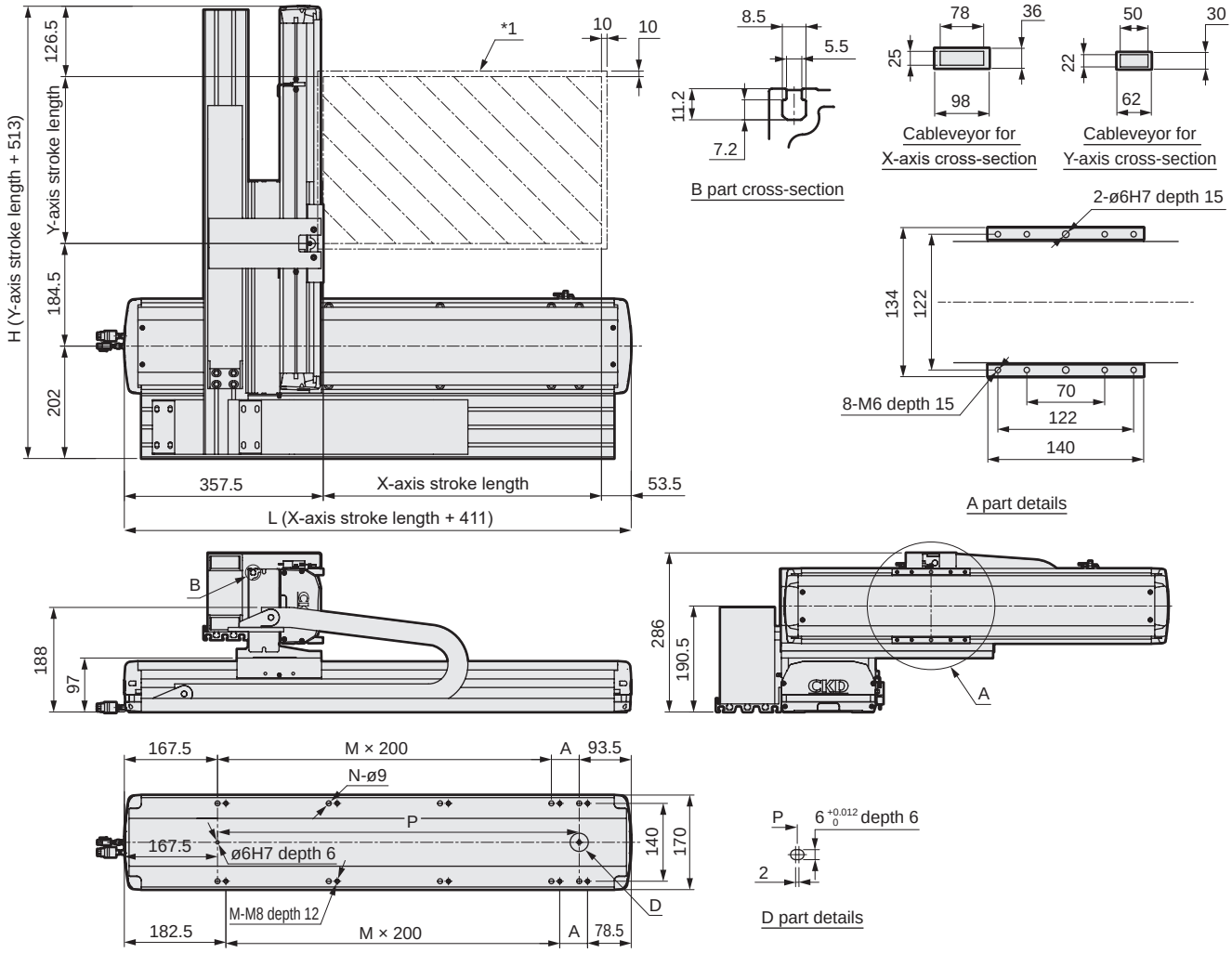

*1: Stops within the moving range and this range when returning to origin.

*This figure shows the dimensions when combined.

X-axis stroke (mm)	100	150	200	250	300	350	400	450	500	550	600	650	700	750	800	850	900	950	1000	1050
L	511	561	611	661	711	761	811	861	911	961	1011	1061	1111	1161	1211	1261	1311	1361	1411	1461
A	50	100	150	200	50	100	150	200	50	100	150	200	50	100	150	200	50	100	150	200
M	1	1	1	1	2	2	2	2	3	3	3	3	4	4	4	4	5	5	5	5
N	6	6	6	6	8	8	8	8	10	10	10	10	12	12	12	12	14	14	14	14
P	250	300	350	400	450	500	550	600	650	700	750	800	850	900	950	1000	1050	1100	1150	1200
Max. working speed (mm/s)	1000																900		800	

X-axis stroke (mm)	1100	1150	1200	1250
L	1511	1561	1611	1661
A	50	100	150	200
M	6	6	6	6
N	16	16	16	16
P	1250	1300	1350	1400
Max. working speed (mm/s)	700		600	

Y-axis stroke (mm)	50	100	150	200	250	300	350	400	450	500	550	600	650
H	563	613	663	713	763	813	863	913	963	1013	1063	1113	1163
Max. working speed (mm/s)	1000												
Max. load capacity (kg)	30					25		20				16	

List of attachments

[Motor mounting parts]

Model No.	Mounted motor specification	Motor mounting direction	Mounting parts	Shipment method	Motor capacity	Motor mounting bolt	
ETS-17	M	B	Coupling	Assembled at shipment	400 W	M5	4
	Y					M5	4
ETS-14	P				200 W	M4	4

*When "O" is selected for Mounted motor specification, the motor specification code for the 1st and 2nd axes is "M" or "P".

[Origin sensor/Limit sensor]

Manufacturer	Model	Quantity
OMRON Corporation	EE-SX672	6

*Refer to page 156 for sensor specifications.

[Other attachments for axis combinations]

Cableveyor, axis combination bracket

Dimensions

ETS-760A2

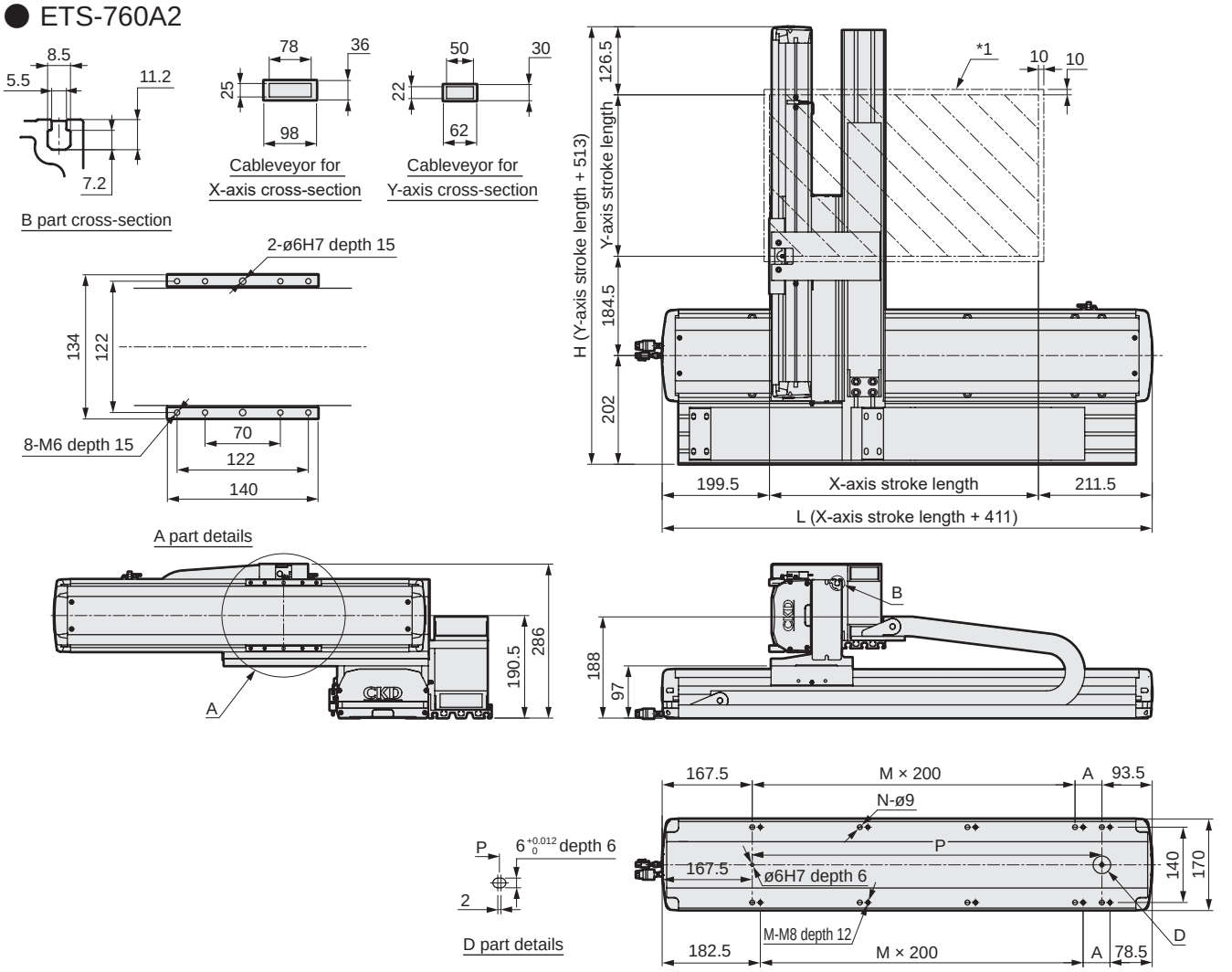

*1: Stops within the moving range and this range when returning to origin.

*This figure shows the dimensions when combined.

X-axis stroke (mm)	100	150	200	250	300	350	400	450	500	550	600	650	700	750	800	850	900	950	1000	1050
L	511	561	611	661	711	761	811	861	911	961	1011	1061	1111	1161	1211	1261	1311	1361	1411	1461
A	50	100	150	200	50	100	150	200	50	100	150	200	50	100	150	200	50	100	150	200
M	1	1	1	1	2	2	2	2	3	3	3	3	4	4	4	4	5	5	5	5
N	6	6	6	6	8	8	8	8	10	10	10	10	12	12	12	12	14	14	14	14
P	250	300	350	400	450	500	550	600	650	700	750	800	850	900	950	1000	1050	1100	1150	1200
Max. working speed (mm/s)	1000																900		800	

X-axis stroke (mm)	1100	1150	1200	1250
L	1511	1561	1611	1661
A	50	100	150	200
M	6	6	6	6
N	16	16	16	16
P	1250	1300	1350	1400
Max. working speed (mm/s)	700		600	

Y-axis stroke (mm)	50	100	150	200	250	300	350	400	450	500	550	600	650
H	563	613	663	713	763	813	863	913	963	1013	1063	1113	1163
Max. working speed (mm/s)	1000												
Max. load capacity (kg)	30					25		20				16	

List of attachments

[Motor mounting parts]

Model No.	Mounted motor specification	Motor mounting direction	Mounting parts	Shipment method	Motor capacity	Motor mounting bolt	
ETS-17	M	B	Coupling	Assembled at shipment	400 W	M5	4
	Y					M5	4
ETS-14	P				200 W	M4	4

*When "O" is selected for Mounted motor specification, the motor specification code for the 1st and 2nd axes is "M" or "P".

[Origin sensor/Limit sensor]

Manufacturer	Model	Quantity
OMRON Corporation	EE-SX672	6

*Refer to page 156 for sensor specifications.

[Other attachments for axis combinations]

Cableveyor, axis combination bracket

Dimensions

● ETS-760A3

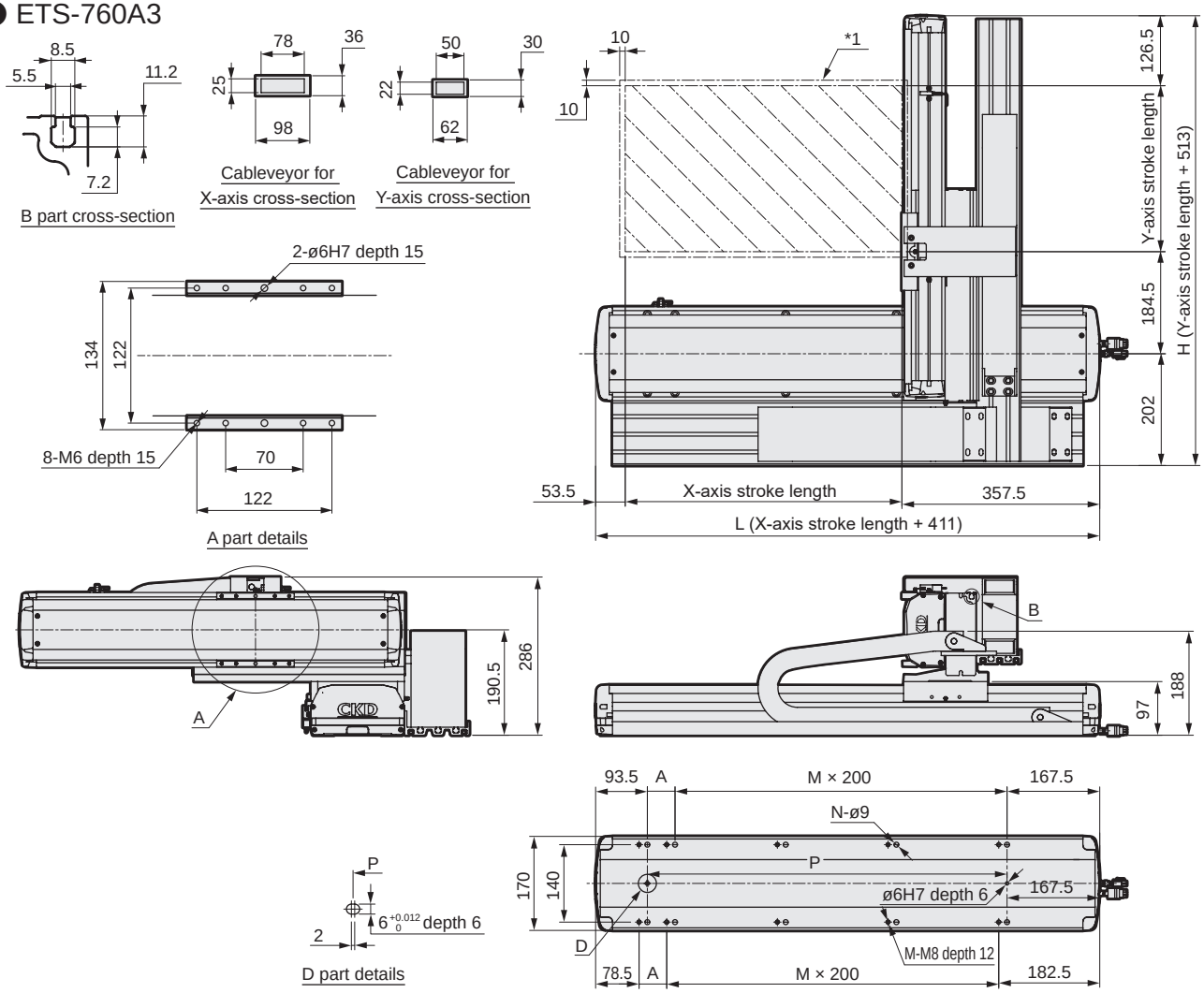

*1: Stops within the moving range and this range when returning to origin.

*This figure shows the dimensions when combined.

X-axis stroke (mm)	100	150	200	250	300	350	400	450	500	550	600	650	700	750	800	850	900	950	1000	1050
L	511	561	611	661	711	761	811	861	911	961	1011	1061	1111	1161	1211	1261	1311	1361	1411	1461
A	50	100	150	200	50	100	150	200	50	100	150	200	50	100	150	200	50	100	150	200
M	1	1	1	1	2	2	2	2	3	3	3	3	4	4	4	4	5	5	5	5
N	6	6	6	6	8	8	8	8	10	10	10	10	12	12	12	12	14	14	14	14
P	250	300	350	400	450	500	550	600	650	700	750	800	850	900	950	1000	1050	1100	1150	1200
Max. working speed (mm/s)	1000																900		800	

X-axis stroke (mm)	1100	1150	1200	1250
L	1511	1561	1611	1661
A	50	100	150	200
M	6	6	6	6
N	16	16	16	16
P	1250	1300	1350	1400
Max. working speed (mm/s)	700		600	

Y-axis stroke (mm)	50	100	150	200	250	300	350	400	450	500	550	600	650
H	563	613	663	713	763	813	863	913	963	1013	1063	1113	1163
Max. working speed (mm/s)	1000												
Max. load capacity (kg)	30					25		20				16	

List of attachments

[Motor mounting parts]

Model No.	Mounted motor specification	Motor mounting direction	Mounting parts	Shipment method	Motor capacity	Motor mounting bolt	
ETS-17	M	B	Coupling	Assembled at shipment	400 W	M5	4
	Y					M5	4
ETS-14	P				200 W	M4	4

*When "O" is selected for Mounted motor specification, the motor specification code for the 1st and 2nd axes is "M" or "P".

[Origin sensor/Limit sensor]

Manufacturer	Model	Quantity
OMRON Corporation	EE-SX672	6

*Refer to page 156 for sensor specifications.

[Other attachments for axis combinations]

Cableveyor, axis combination bracket

Dimensions

● ETS-760A4

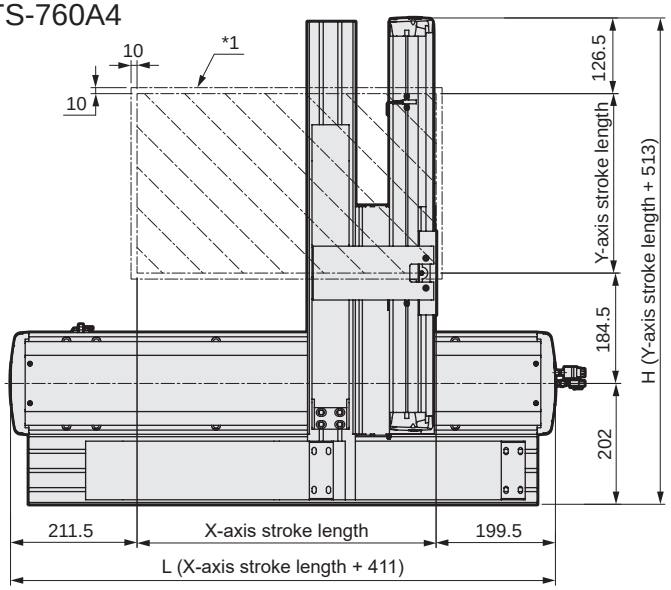

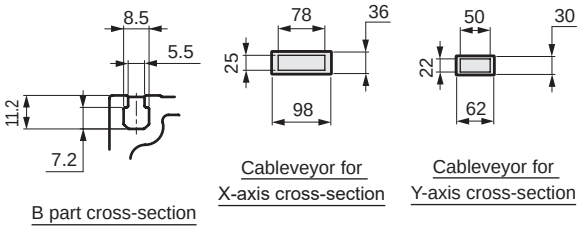

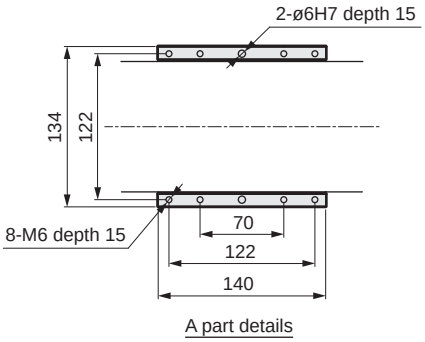

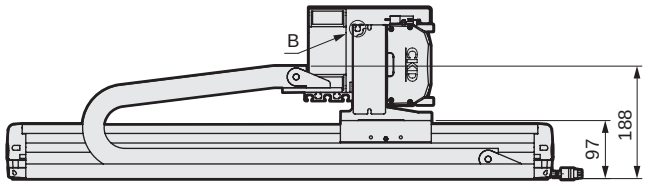

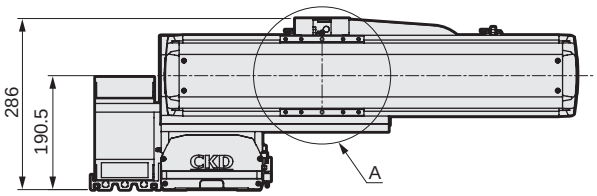

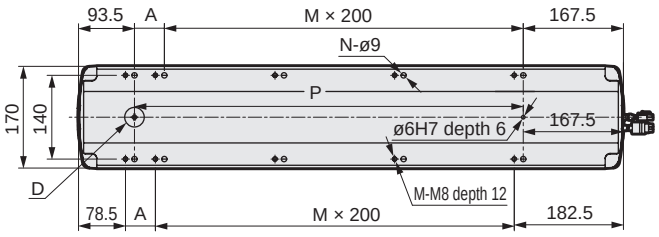

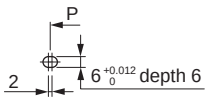

*1: Stops within the moving range and this range when returning to origin.

*This figure shows the dimensions when combined.

X-axis stroke (mm)	100	150	200	250	300	350	400	450	500	550	600	650	700	750	800	850	900	950	1000	1050
L	511	561	611	661	711	761	811	861	911	961	1011	1061	1111	1161	1211	1261	1311	1361	1411	1461
A	50	100	150	200	50	100	150	200	50	100	150	200	50	100	150	200	50	100	150	200
M	1	1	1	1	2	2	2	2	3	3	3	3	4	4	4	4	5	5	5	5
N	6	6	6	6	8	8	8	8	10	10	10	10	12	12	12	12	14	14	14	14
P	250	300	350	400	450	500	550	600	650	700	750	800	850	900	950	1000	1050	1100	1150	1200
Max. working speed (mm/s)	1000																900		800	

X-axis stroke (mm)	1100	1150	1200	1250
L	1511	1561	1611	1661
A	50	100	150	200
M	6	6	6	6
N	16	16	16	16
P	1250	1300	1350	1400
Max. working speed (mm/s)	700		600	

Y-axis stroke (mm)	50	100	150	200	250	300	350	400	450	500	550	600	650
H	563	613	663	713	763	813	863	913	963	1013	1063	1113	1163
Max. working speed (mm/s)	1000												
Max. load capacity (kg)	30					25		20				16	

List of attachments

[Motor mounting parts]

Model No.	Mounted motor specification	Motor mounting direction	Mounting parts	Shipment method	Motor capacity	Motor mounting bolt	
ETS-17	M	B	Coupling	Assembled at shipment	400 W	M5	4
	Y					M5	4
ETS-14	P				200 W	M4	4

*When "O" is selected for Mounted motor specification, the motor specification code for the 1st and 2nd axes is "M" or "P".

[Origin sensor/Limit sensor]

Manufacturer	Model	Quantity
OMRON Corporation	EE-SX672	6

*Refer to page 156 for sensor specifications.

[Other attachments for axis combinations]

Cableveyor, axis combination bracket

MEMO



Electric actuator Ball screw drive Slider

ETS Multi-Axis Series

- Servo motor capacity: 750 W/400 W
- 2-axis combination X-Y axes (A type)

RoHS

How to order

ETS - 870 A 1 - 040 030 - M N W

Ⓐ Combined axes

870	ETS-22 × ETS-17

Ⓑ Combination

A	X-Y axes

Ⓒ Combination direction

1 to 4	Confirm the table below.

Ⓓ 1st axis stroke

010 to 150	100 mm to 1500 mm (50 mm pitch)

Ⓔ 2nd axis stroke

005 to 075	50 mm to 750 mm (50 mm pitch)

Ⓕ Mounted motor specification *3

M, Y, P, O	Select the mounted motor specification from the table below.

Ⓖ Brake *1

N	None

Ⓗ Origin/Limit sensor (3 pcs × 2 axes) *2

N	None
W	Yes

*1: The brake targets the 2nd axis.
*2: The user can adjust the sensor position. (Included at shipment)
*3: When "O" is selected for Mounted motor specification, the motor specification code for the 1st and 2nd axes is "M" or "P".

Ⓒ Combination direction

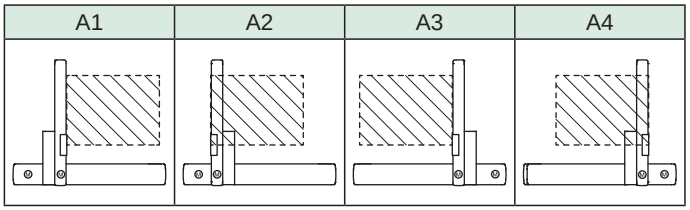

Ⓕ Mounted motor specification

Manufacturer	400 W	750 W
Mitsubishi Electric Corporation	M	M
Delta Electronics Co., Ltd.	M	M
Sanyo Denki Co., Ltd.	M	-
YASKAWA Electric Corporation	Y	Y
Keyence Corporation	Y	Y
Panasonic Corporation	P	P
OMRON Corporation	O	O

*Refer to page 164 for the recommended motor model No.

Ⓒ Combination direction and motor mounting direction

Combined axes	Combination	Combination direction	Motor mounting direction and motor capacity			
			1st axis		2nd axis	
			Model	750 W	Model	400 W
ETS-870	A	1	ETS-22	B	ETS-17	B
		2		B		B
		3		B		B
		4		B		B

*B: Built-in mount

ⒹⒺ stroke length

Combined axes	Combination	1st axis			2nd axis		
		Model	Screw lead (mm)	Stroke (mm)	Model	Screw lead (mm)	Stroke (mm)
ETS-870	A	ETS-22	25	100 to 1500	ETS-17	20	50 to 750

Grease nipple

Combined axes	Combination	Combination direction	1st axis		2nd axis	
			Model	Grease nipple position	Model	Grease nipple position
ETS-870	A	1	ETS-22	L	ETS-17	R
		2		L		L
		3		R		L
		4		R		R

*R: Right side L: Left side

Dimensions

● ETS-870A1

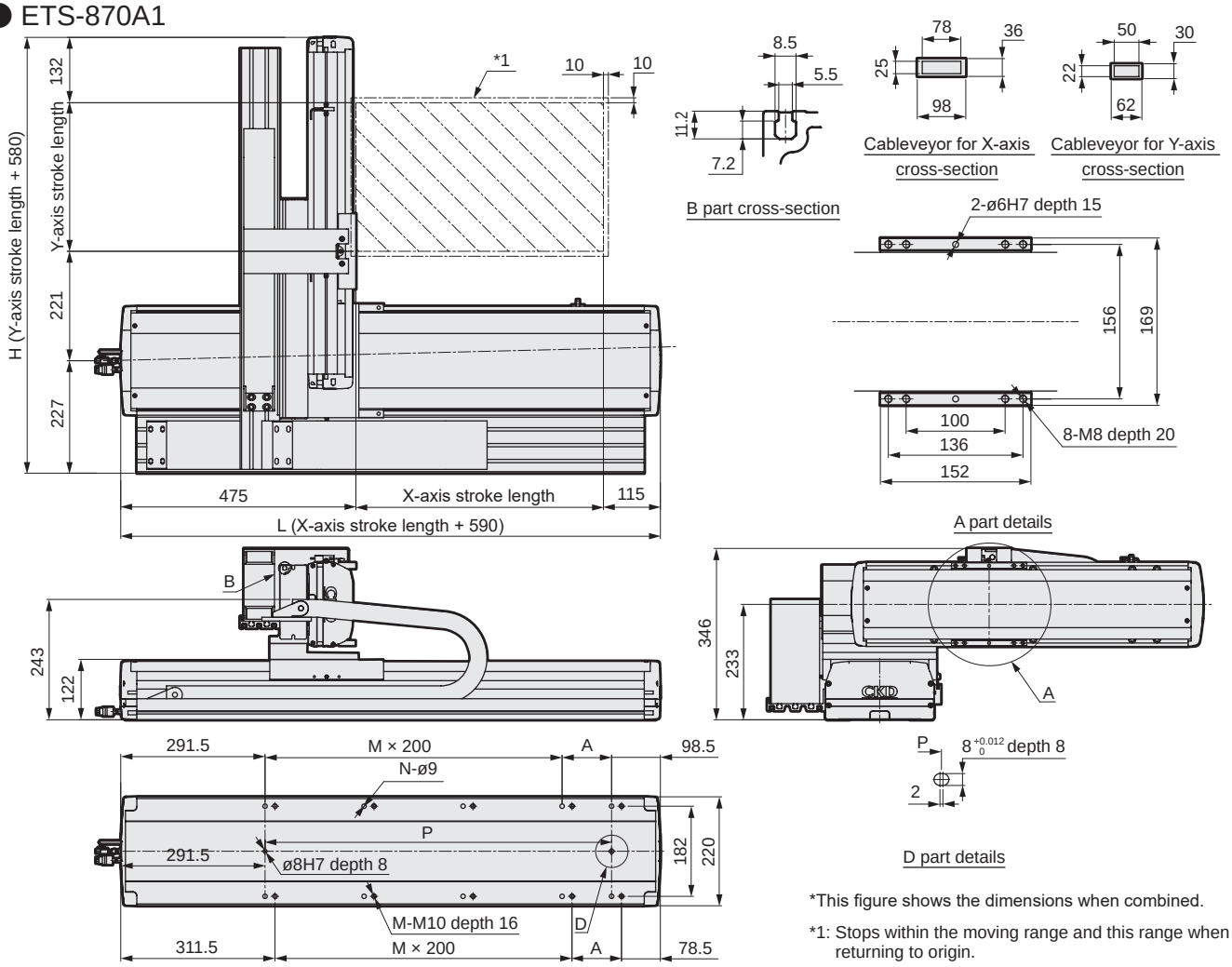

*This figure shows the dimensions when combined.

*1: Stops within the moving range and this range when returning to origin.

X-axis stroke (mm)	100	150	200	250	300	350	400	450	500	550	600	650	700	750	800	850	900	950	1000
L	690	740	790	840	890	940	990	1040	1090	1140	1190	1240	1290	1340	1390	1440	1490	1540	1590
A	100	150	200	50	100	150	200	50	100	150	200	50	100	150	200	50	100	150	200
M	1	1	1	2	2	2	2	3	3	3	3	4	4	4	4	5	5	5	5
N	6	6	6	8	8	8	8	10	10	10	10	12	12	12	12	14	14	14	14
P	300	350	400	450	500	550	600	650	700	750	800	850	900	950	1000	1050	1100	1150	1200
Max. working speed (mm/s)	1250																	1125	

X-axis stroke (mm)	1050	1100	1150	1200	1250	1300	1350	1400	1450	1500
L	1640	1690	1740	1790	1840	1890	1940	1990	2040	2090
A	50	100	150	200	50	100	150	200	50	100
M	6	6	6	6	7	7	7	7	8	8
N	16	16	16	16	18	18	18	18	20	20
P	1250	1300	1350	1400	1450	1500	1550	1600	1650	1700
Max. working speed (mm/s)	1000		875		750		625		500	

Y-axis stroke (mm)	50	100	150	200	250	300	350	400	450	500	550	600	650	700	750
H	630	680	730	780	830	880	930	980	1030	1080	1130	1180	1230	1280	1330
Max. working speed (mm/s)	1000														
Max. load capacity (kg)	50			40				35			30			25	

List of attachments

[Motor mounting parts]

Model No.	Mounted motor specification	Motor mounting direction	Mounting parts	Shipment method	Motor capacity	Motor mounting bolt	
ETS-22	M	B	Coupling	Assembled at shipment	750 W	M6/M5	4
	Y					M6/M5	4
ETS-17	P				400 W	M5/M4	4

*When "O" is selected for Mounted motor specification, the motor specification code for the 1st and 2nd axes is "M" or "P".

[Origin sensor/Limit sensor]

Manufacturer	Model	Quantity
OMRON Corporation	EE-SX672	6

*Refer to page 156 for sensor specifications.

[Other attachments for axis combinations]

Cableveyor, axis combination bracket

Dimensions

ETS-870A2

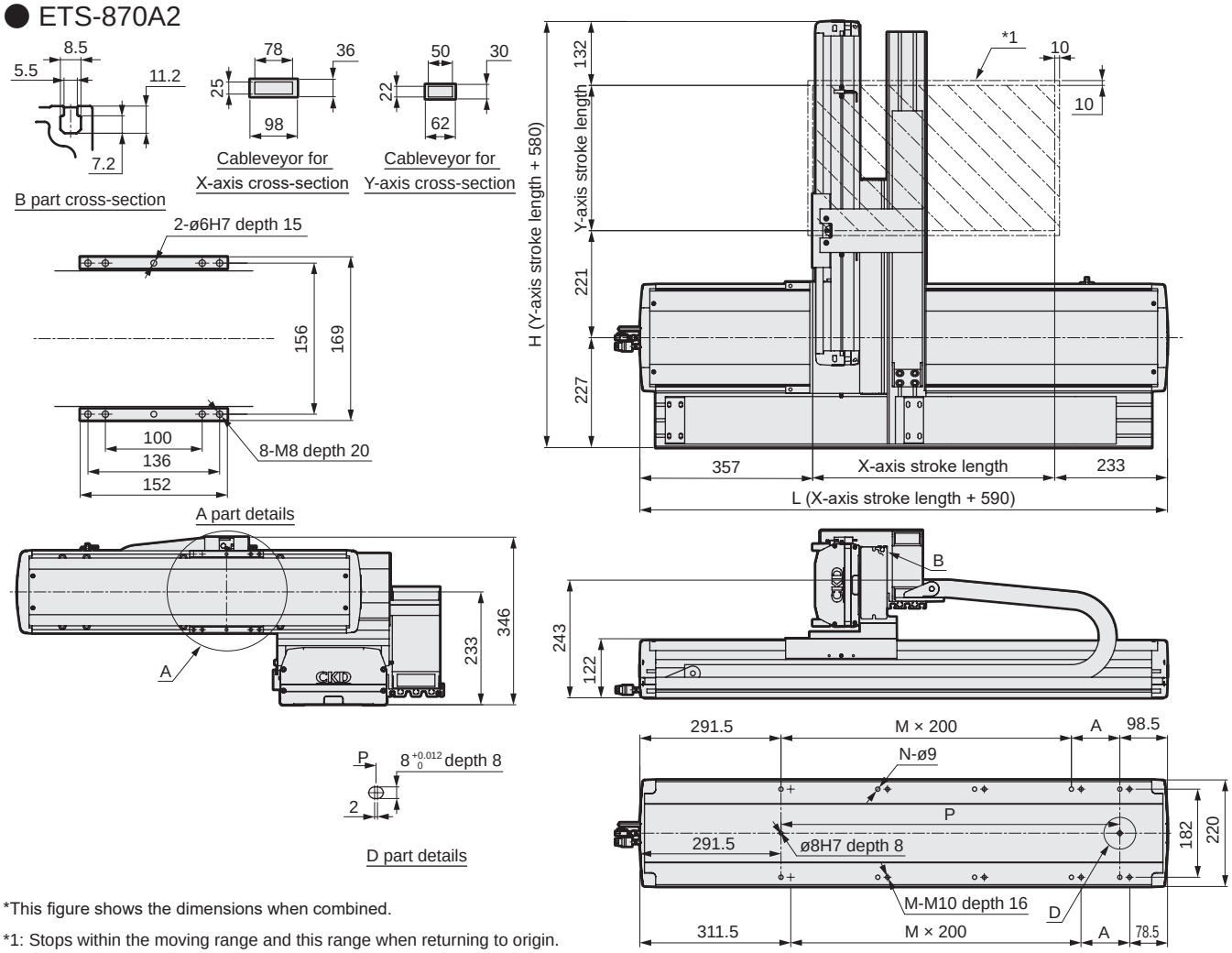

*This figure shows the dimensions when combined.

*1: Stops within the moving range and this range when returning to origin.

X-axis stroke (mm)	100	150	200	250	300	350	400	450	500	550	600	650	700	750	800	850	900	950	1000
L	690	740	790	840	890	940	990	1040	1090	1140	1190	1240	1290	1340	1390	1440	1490	1540	1590
A	100	150	200	50	100	150	200	50	100	150	200	50	100	150	200	50	100	150	200
M	1	1	1	2	2	2	2	3	3	3	3	4	4	4	4	5	5	5	5
N	6	6	6	8	8	8	8	10	10	10	10	12	12	12	12	14	14	14	14
P	300	350	400	450	500	550	600	650	700	750	800	850	900	950	1000	1050	1100	1150	1200
Max. working speed (mm/s)	1250																	1125	

X-axis stroke (mm)	1050	1100	1150	1200	1250	1300	1350	1400	1450	1500
L	1640	1690	1740	1790	1840	1890	1940	1990	2040	2090
A	50	100	150	200	50	100	150	200	50	100
M	6	6	6	6	7	7	7	7	8	8
N	16	16	16	16	18	18	18	18	20	20
P	1250	1300	1350	1400	1450	1500	1550	1600	1650	1700
Max. working speed (mm/s)	1000		875		750		625		500	

Y-axis stroke (mm)	50	100	150	200	250	300	350	400	450	500	550	600	650	700	750
H	630	680	730	780	830	880	930	980	1030	1080	1130	1180	1230	1280	1330
Max. working speed (mm/s)	1000														
Max. load capacity (kg)	50			40				35			30			25	

List of attachments

[Motor mounting parts]

Model No.	Mounted motor specification	Motor mounting direction	Mounting parts	Shipment method	Motor capacity	Motor mounting bolt	
ETS-22	M	B	Coupling	Assembled at shipment	750 W	M6/M5	4
	Y					M6/M5	4
ETS-17	P				400 W	M5/M4	4

*When "O" is selected for Mounted motor specification, the motor specification code for the 1st and 2nd axes is "M" or "P".

[Origin sensor/Limit sensor]

Manufacturer	Model	Quantity
OMRON Corporation	EE-SX672	6

*Refer to page 156 for sensor specifications.

[Other attachments for axis combinations]

Cableveyor, axis combination bracket

Dimensions

● ETS-870A3

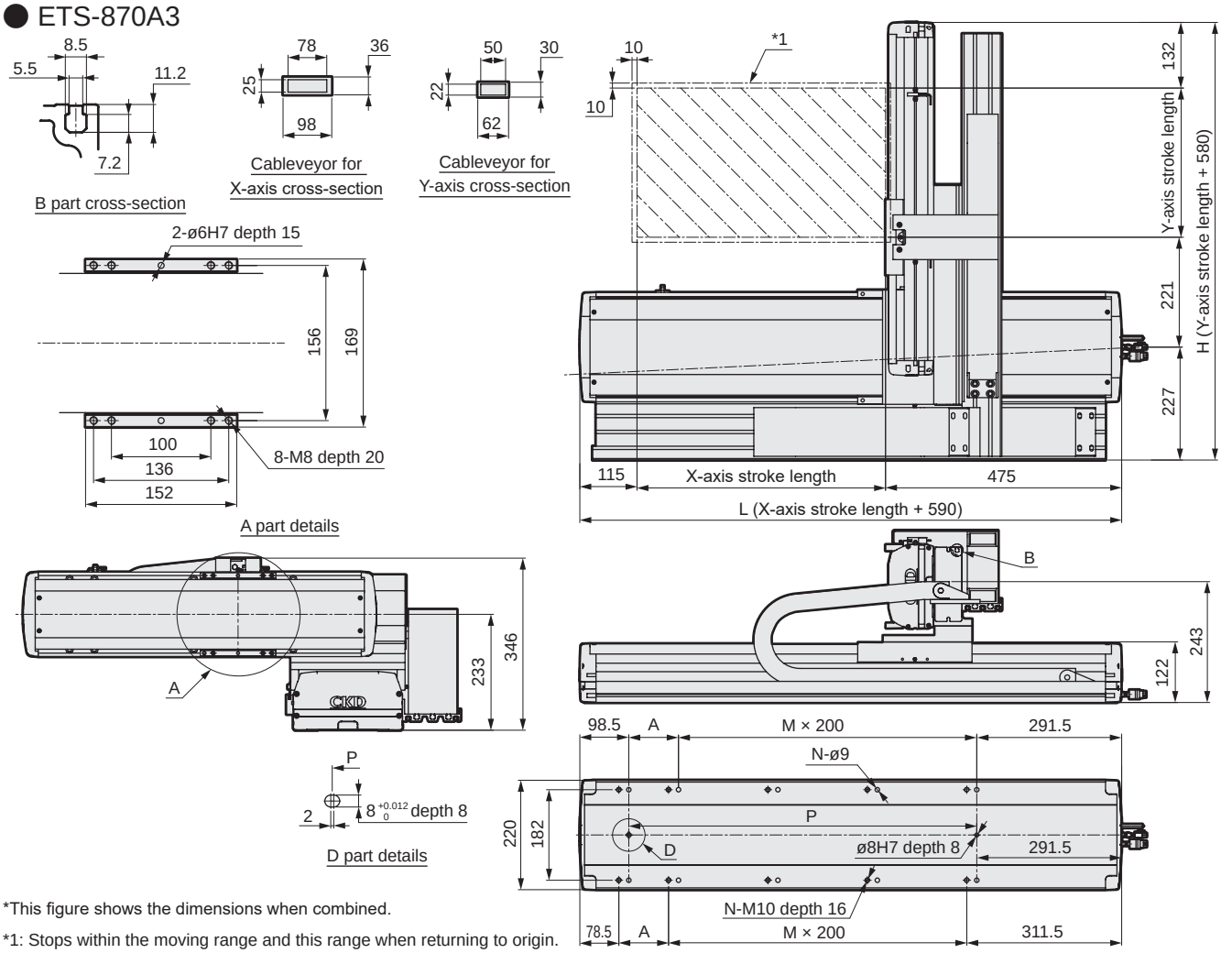

*This figure shows the dimensions when combined.

*1: Stops within the moving range and this range when returning to origin.

X-axis stroke (mm)	100	150	200	250	300	350	400	450	500	550	600	650	700	750	800	850	900	950	1000
L	690	740	790	840	890	940	990	1040	1090	1140	1190	1240	1290	1340	1390	1440	1490	1540	1590
A	100	150	200	50	100	150	200	50	100	150	200	50	100	150	200	50	100	150	200
M	1	1	1	2	2	2	2	3	3	3	3	4	4	4	4	5	5	5	5
N	6	6	6	8	8	8	8	10	10	10	10	12	12	12	12	14	14	14	14
P	300	350	400	450	500	550	600	650	700	750	800	850	900	950	1000	1050	1100	1150	1200
Max. working speed (mm/s)	1250																	1125	

X-axis stroke (mm)	1050	1100	1150	1200	1250	1300	1350	1400	1450	1500
L	1640	1690	1740	1790	1840	1890	1940	1990	2040	2090
A	50	100	150	200	50	100	150	200	50	100
M	6	6	6	6	7	7	7	7	8	8
N	16	16	16	16	18	18	18	18	20	20
P	1250	1300	1350	1400	1450	1500	1550	1600	1650	1700
Max. working speed (mm/s)	1000		875		750		625		500	

Y-axis stroke (mm)	50	100	150	200	250	300	350	400	450	500	550	600	650	700	750
H	630	680	730	780	830	880	930	980	1030	1080	1130	1180	1230	1280	1330
Max. working speed (mm/s)	1000														
Max. load capacity (kg)	50			40			35			30				25	

List of attachments

[Motor mounting parts]

Model No.	Mounted motor specification	Motor mounting direction	Mounting parts	Shipment method	Motor capacity	Motor mounting bolt	
ETS-22	M	B	Coupling	Assembled at shipment	750 W	M6/M5	4
	Y					M6/M5	4
ETS-17	P				400 W	M5/M4	4

*When "O" is selected for Mounted motor specification, the motor specification code for the 1st and 2nd axes is "M" or "P".

[Origin sensor/Limit sensor]

Manufacturer	Model	Quantity
OMRON Corporation	EE-SX672	6

*Refer to page 156 for sensor specifications.

[Other attachments for axis combinations]

Cableveyor, axis combination bracket

Dimensions

ETS-870A4

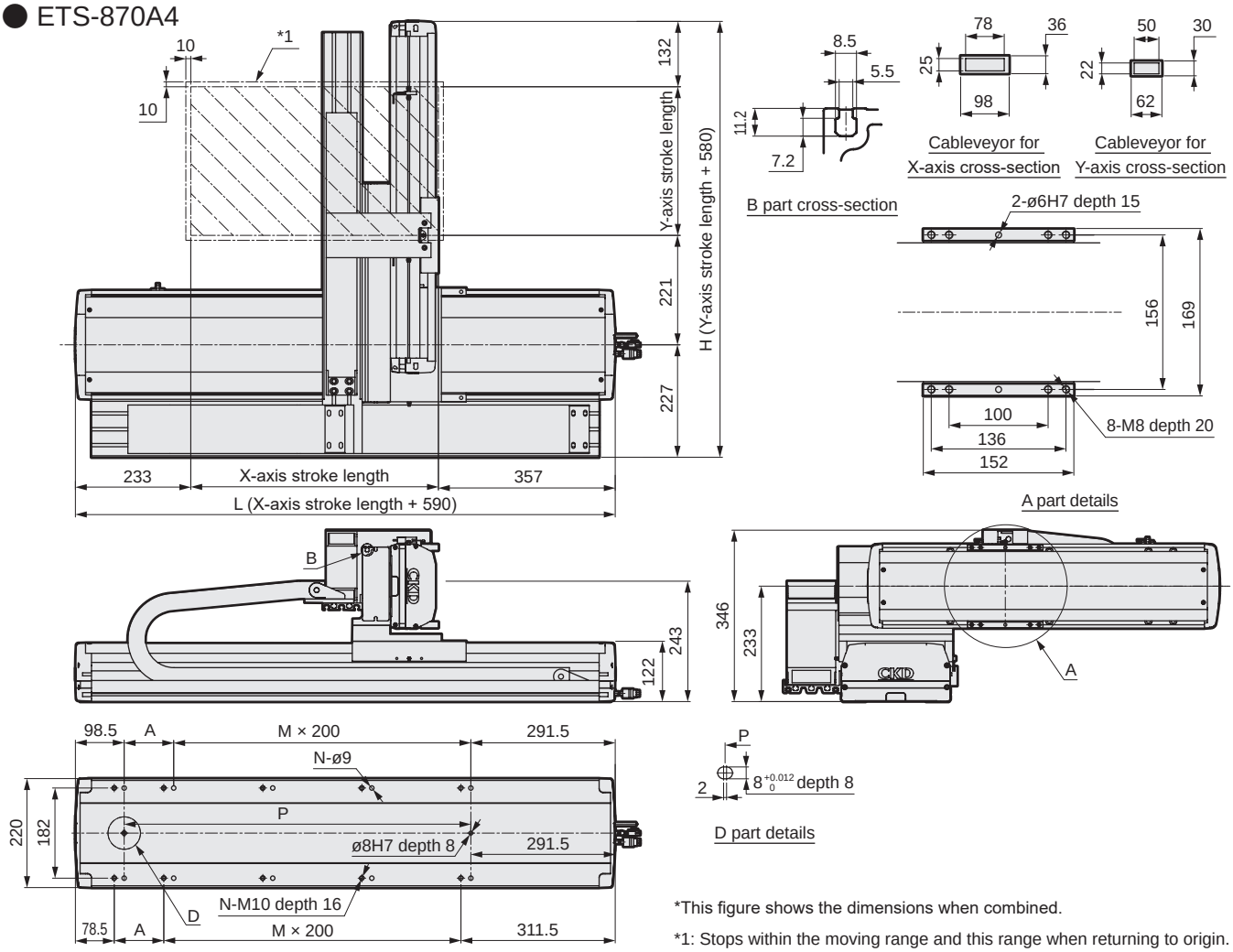

*This figure shows the dimensions when combined.

*1: Stops within the moving range and this range when returning to origin.

X-axis stroke (mm)	100	150	200	250	300	350	400	450	500	550	600	650	700	750	800	850	900	950	1000
L	690	740	790	840	890	940	990	1040	1090	1140	1190	1240	1290	1340	1390	1440	1490	1540	1590
A	100	150	200	50	100	150	200	50	100	150	200	50	100	150	200	50	100	150	200
M	1	1	1	2	2	2	2	3	3	3	3	4	4	4	4	5	5	5	5
N	6	6	6	8	8	8	8	10	10	10	10	12	12	12	12	14	14	14	14
P	300	350	400	450	500	550	600	650	700	750	800	850	900	950	1000	1050	1100	1150	1200
Max. working speed (mm/s)	1250																	1125	

X-axis stroke (mm)	1050	1100	1150	1200	1250	1300	1350	1400	1450	1500
L	1640	1690	1740	1790	1840	1890	1940	1990	2040	2090
A	50	100	150	200	50	100	150	200	50	100
M	6	6	6	6	7	7	7	7	8	8
N	16	16	16	16	18	18	18	18	20	20
P	1250	1300	1350	1400	1450	1500	1550	1600	1650	1700
Max. working speed (mm/s)	1000		875		750		625		500	

Y-axis stroke (mm)	50	100	150	200	250	300	350	400	450	500	550	600	650	700	750
H	630	680	730	780	830	880	930	980	1030	1080	1130	1180	1230	1280	1330
Max. working speed (mm/s)	1000														
Max. load capacity (kg)	50			40				35			30			25	

List of attachments

[Motor mounting parts]

Model No.	Mounted motor specification	Motor mounting direction	Mounting parts	Shipment method	Motor capacity	Motor mounting bolt	
ETS-22	M	B	Coupling	Assembled at shipment	750 W	M6/M5	4
	Y					M6/M5	4
ETS-17	P				400 W	M5/M4	4

*When "O" is selected for Mounted motor specification, the motor specification code for the 1st and 2nd axes is "M" or "P".

[Origin sensor/Limit sensor]

Manufacturer	Model	Quantity
OMRON Corporation	EE-SX672	6

*Refer to page 156 for sensor specifications.

[Other attachments for axis combinations]

Cableveyor, axis combination bracket

MEMO

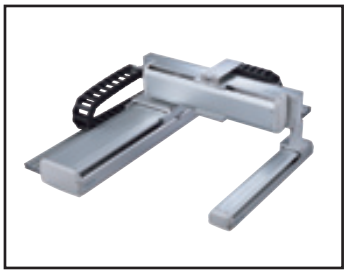

Electric actuator Ball screw drive Slider

ETS Multi-Axis Series

- Servo motor capacity: 200 W/400 W/750 W
- 2-axis combination X-Y axes/with support guide (G type)

RoHS

How to order

ETS - 760 G 1 - 040 030 - M N W

Ⓐ Ⓑ Ⓒ Ⓓ Ⓔ Ⓕ Ⓖ Ⓗ

Ⓐ Combined axes

760	ETS-17 × ETS-14
870	ETS-22 × ETS-17

Ⓑ Combination

G	X-Y axes with support guide

Ⓒ Combination direction

1 to 4	Confirm the table below.

Ⓓ 1st axis stroke

010 to 150	100 mm to (50 mm pitch) 1500 mm

Ⓔ 2nd axis stroke

020 to 105	200 mm to (50 mm pitch) 1050 mm

Ⓕ Mounted motor specification *3

M	Select the mounted motor specification from the table below.
Y	
P	
O	

Ⓖ Brake *1

N	None

Ⓗ Origin/Limit sensor (3 pcs × 2 axes) *2

N	None
W	Yes

*1: The brake targets the 2nd axis.
*2: The user can adjust the sensor position. (Included at shipment)
*3: When "O" is selected for Mounted motor specification, the motor specification code for the 1st and 2nd axes is "M" or "P".

Ⓕ Mounted motor specification

Manufacturer	200 W	400 W	750 W
Mitsubishi Electric Corporation	M	M	M
Delta Electronics Co., Ltd.	M	M	M
Sanyo Denki Co., Ltd.	M	M	-
YASKAWA Electric Corporation	Y	Y	Y
Keyence Corporation	Y	Y	Y
Panasonic Corporation	P	P	P
OMRON Corporation	O	O	O

*Refer to page 164 for the recommended motor model No.

Ⓒ Combination direction

G1	G2	G3	G4
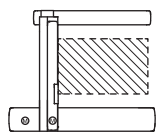	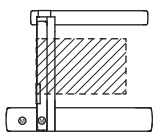	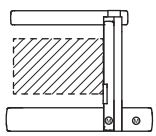	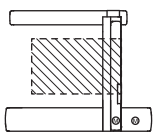

Axis combination specifications

Ⓒ Combination direction and motor mounting direction

Combined axes	Combination	Combination direction	Motor mounting direction and motor capacity							
			1st axis				2nd axis			
			Model	200 W	400 W	750 W	Model	200 W	400 W	750 W
ETS-760	G	1 to 4	ETS-17	-	B	-	ETS-14	B	-	-
ETS-870	G	1 to 4	ETS-22	-	-	B	ETS-17	-	B	-

*B: Built-in mount

ⒹⒺ stroke length

Combined axes	Combination	1st axis			2nd axis		
		Model	Screw lead (mm)	Stroke (mm)	Model	Screw lead (mm)	Stroke (mm)
ETS-760	G	ETS-17	20	100 to 1250	ETS-14	20	200 to 850
ETS-870		ETS-22	25	100 to 1500	ETS-17	20	200 to 1050

Grease nipple

Combined axes	Combination	Combination direction	1st axis		2nd axis	
			Model	Grease nipple position	Model	Grease nipple position
ETS-760	G	1	ETS-17	L	ETS-14	R
		2		L		L
		3		R		L
		4		R		R
ETS-870	G	1	ETS-22	L	ETS-17	R
		2		L		L
		3		R		L
		4		R		R

*R: Right side L: Left side

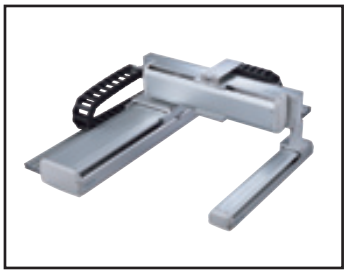

Electric actuator Ball screw drive Slider

ETS Multi-Axis Series

- Servo motor capacity: 400 W/200 W
- 2-axis combination X-Y axes/with support guide (G type)

RoHS

How to order

ETS - 760 G 1 - 040 030 - M N W

Ⓐ Combined axes

760	ETS-17 × ETS-14

Ⓑ Combination

G	X-Y axes with support guide

Ⓒ Combination direction

1 to 4	Confirm the table below.

Ⓓ 1st axis stroke

010 to 125	100 mm to (50 mm pitch) 1250 mm

Ⓔ 2nd axis stroke

020 to 085	200 mm to (50 mm pitch) 850 mm

Ⓕ Mounted motor specification *3

M, Y, P, O	Select the mounted motor specification from the table below.

Ⓖ Brake *1

N	None

Ⓗ Origin/Limit sensor (3 pcs × 2 axes) *2

N	None
W	Yes

*1: The brake targets the 2nd axis.
*2: The user can adjust the sensor position. (Included at shipment)
*3: When "O" is selected for Mounted motor specification, the motor specification code for the 1st and 2nd axes is "M" or "P".

Ⓕ Mounted motor specification

Manufacturer	200 W	400 W
Mitsubishi Electric Corporation	M	M
Delta Electronics Co., Ltd.	M	M
Sanyo Denki Co., Ltd.	M	M
YASKAWA Electric Corporation	Y	Y
Keyence Corporation	Y	Y
Panasonic Corporation	P	P
OMRON Corporation	O	O

*Refer to page 164 for the recommended motor model No.

Ⓒ Combination direction

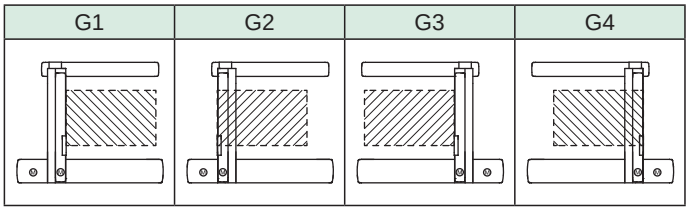

Ⓒ Combination direction and motor mounting direction

Combined axes	Combination	Combination direction	Motor mounting direction and motor capacity			
			1st axis		2nd axis	
			Model	400 W	Model	200 W
ETS-760	G	1	ETS-17	B	ETS-14	B
		2		B		B
		3		B		B
		4		B		B

*B: Built-in mount

ⒹⒺ stroke length

Combined axes	Combination	1st axis			2nd axis		
		Model	Screw lead (mm)	Stroke (mm)	Model	Screw lead (mm)	Stroke (mm)
ETS-760	G	ETS-17	20	100 to 1250	ETS-14	20	200 to 850

Grease nipple

Combined axes	Combination	Combination direction	1st axis		2nd axis	
			Model	Grease nipple position	Model	Grease nipple position
ETS-760	G	1	ETS-17	L	ETS-14	R
		2		L		L
		3		R		L
		4		R		R

*R: Right side L: Left side

Dimensions

● ETS-760G1

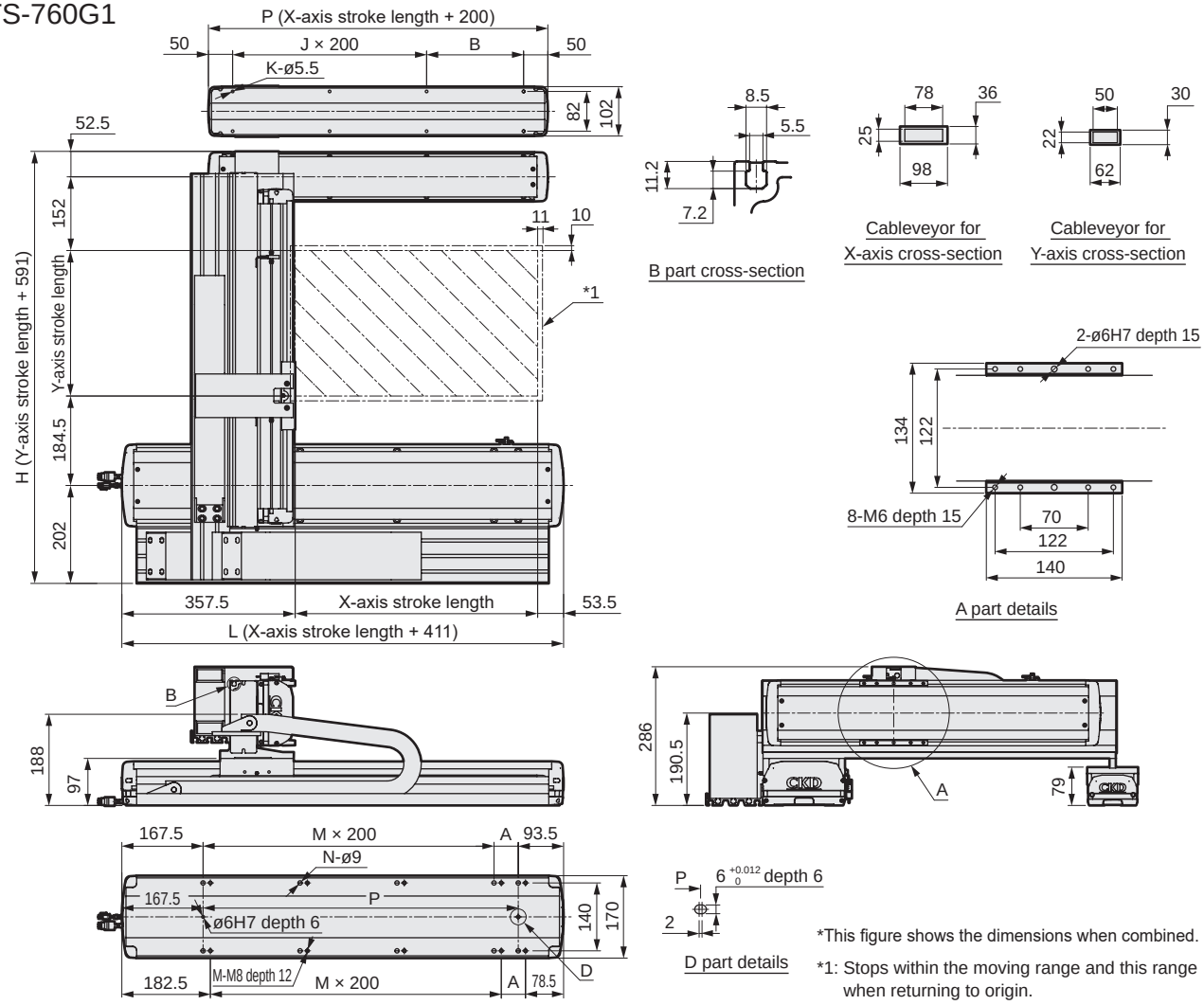

*This figure shows the dimensions when combined.

*1: Stops within the moving range and this range when returning to origin.

X-axis stroke (mm)	100	150	200	250	300	350	400	450	500	550	600	650	700	750	800	850	900	950	1000	1050	1100	1150	1200	1250
L	511	561	611	661	711	761	811	861	911	961	1011	1061	1111	1161	1211	1261	1311	1361	1411	1461	1511	1561	1611	1661
A	50	100	150	200	50	100	150	200	50	100	150	200	50	100	150	200	50	100	150	200	50	100	150	200
M	1	1	1	1	2	2	2	2	3	3	3	3	4	4	4	4	5	5	5	5	6	6	6	6
N	6	6	6	6	8	8	8	8	10	10	10	10	12	12	12	12	14	14	14	14	16	16	16	16
P	250	300	350	400	450	500	550	600	650	700	750	800	850	900	950	1000	1050	1100	1150	1200	1250	1300	1350	1400
Max. working speed (mm/s)	1000																900		800		700		600	

X-axis support guide stroke (mm)	100	150	200	250	300	350	400	450	500	550	600	650	700	750	800	850	900	950	1000	1050	1100	1150	1200	1250
P	300	350	400	450	500	550	600	650	700	750	800	850	900	950	1000	1050	1100	1150	1200	1250	1300	1350	1400	1450
B	200	50	100	150	200	50	100	150	200	50	100	150	200	50	100	150	200	50	100	150	200	50	100	150
J	0	1	1	1	1	2	2	2	2	3	3	3	3	4	4	4	4	5	5	5	5	6	6	6
K	4	6	6	6	6	8	8	8	8	10	10	10	10	12	12	12	12	14	14	14	14	16	16	16

Y-axis stroke (mm)	200	250	300	350	400	450	500	550	600	650	700	750	800	850
H	791	841	891	941	991	1041	1091	1141	1191	1241	1291	1341	1391	1441
Max. working speed (mm/s)	1000													
Max. load capacity (kg)	35										32		30	

List of attachments

[Motor mounting parts]

Model No.	Mounted motor specifications	Motor mounting direction	Mounting parts	Shipment method	Motor capacity	Motor mounting bolt	
ETS-17	M	B	Coupling	Assembled at shipment	400 W	M5	4
	Y					M5	4
ETS-14	P				200 W	M4	4

*When "O" is selected for Mounted motor specification, the motor specification code for the 1st and 2nd axes is "M" or "P".

[Origin sensor/Limit sensor]

Manufacturer	Model	Quantity
OMRON Corporation	EE-SX672	6

*Refer to page 156 for sensor specifications.

[Other attachments for axis combinations]

Cableveyor, axis combination bracket

Dimensions

● ETS-760G2

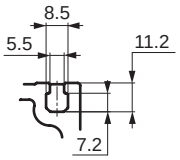

B part cross-section

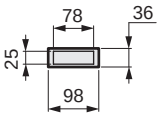

Cableveyor for X-axis cross-section

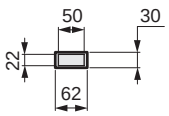

Cableveyor for Y-axis cross-section

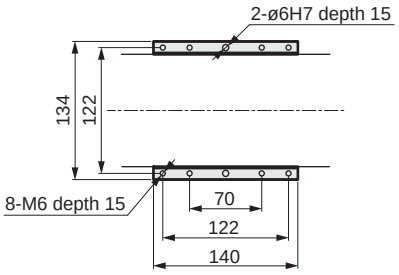

A part details

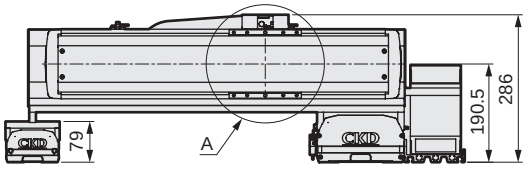

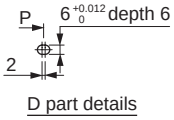

D part details

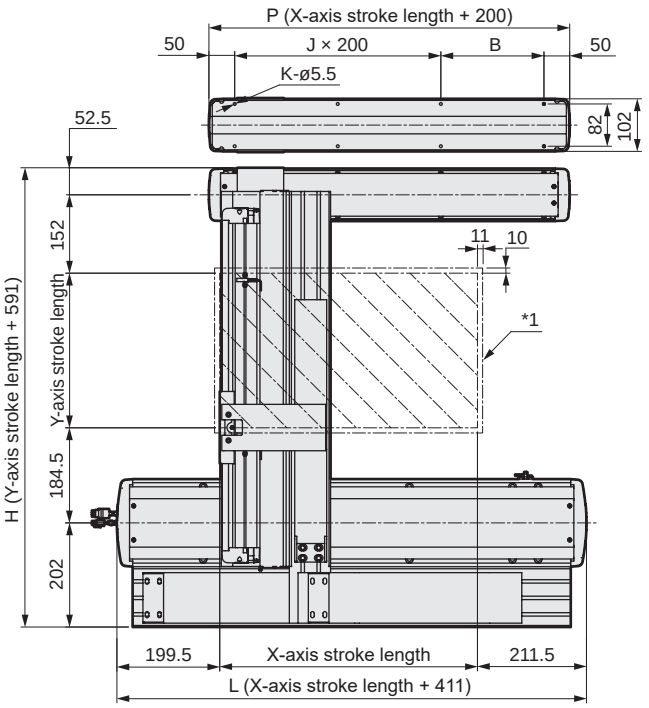

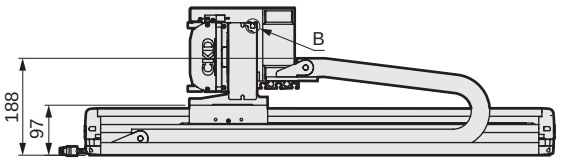

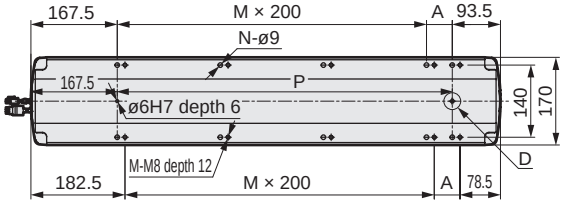

*This figure shows the dimensions when combined.

*1: Stops within the moving range and this range when returning to origin.

X-axis stroke (mm)	100	150	200	250	300	350	400	450	500	550	600	650	700	750	800	850	900	950	1000	1050	1100	1150	1200	1250
L	511	561	611	661	711	761	811	861	911	961	1011	1061	1111	1161	1211	1261	1311	1361	1411	1461	1511	1561	1611	1661
A	50	100	150	200	50	100	150	200	50	100	150	200	50	100	150	200	50	100	150	200	50	100	150	200
M	1	1	1	1	2	2	2	2	3	3	3	3	4	4	4	4	5	5	5	5	6	6	6	6
N	6	6	6	6	8	8	8	8	10	10	10	10	12	12	12	12	14	14	14	14	16	16	16	16
P	250	300	350	400	450	500	550	600	650	700	750	800	850	900	950	1000	1050	1100	1150	1200	1250	1300	1350	1400
Max. working speed (mm/s)	1000																900		800		700		600	

X-axis support guide stroke (mm)	100	150	200	250	300	350	400	450	500	550	600	650	700	750	800	850	900	950	1000	1050	1100	1150	1200	1250
P	300	350	400	450	500	550	600	650	700	750	800	850	900	950	1000	1050	1100	1150	1200	1250	1300	1350	1400	1450
B	200	50	100	150	200	50	100	150	200	50	100	150	200	50	100	150	200	50	100	150	200	50	100	150
J	0	1	1	1	1	2	2	2	2	3	3	3	3	4	4	4	4	5	5	5	5	6	6	6
K	4	6	6	6	6	8	8	8	8	10	10	10	10	12	12	12	12	14	14	14	14	16	16	16

Y-axis stroke (mm)	200	250	300	350	400	450	500	550	600	650	700	750	800	850
H	791	841	891	941	991	1041	1091	1141	1191	1241	1291	1341	1391	1441
Max. working speed (mm/s)	1000													
Max. load capacity (kg)	35										32		30	

List of attachments

[Motor mounting parts]

Model No.	Mounted motor specifications	Motor mounting direction	Mounting parts	Shipment method	Motor capacity	Motor mounting bolt	
ETS-17	M	B	Coupling	Assembled at shipment	400 W	M5	4
	Y					M5	4
ETS-14	P				200 W	M4	4

*When "O" is selected for Mounted motor specification, the motor specification code for the 1st and 2nd axes is "M" or "P".

[Origin sensor/Limit sensor]

Manufacturer	Model	Quantity
OMRON Corporation	EE-SX672	6

*Refer to page 156 for sensor specifications.

[Other attachments for axis combinations]

Cableveyor, axis combination bracket

Dimensions

ETS-760G3

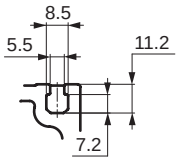

B part cross-section

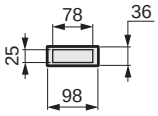

Cableveyor for X-axis cross-section

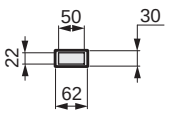

Cableveyor for Y-axis cross-section

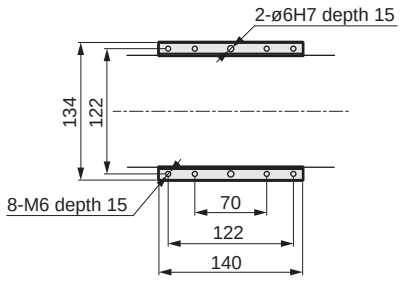

A part details

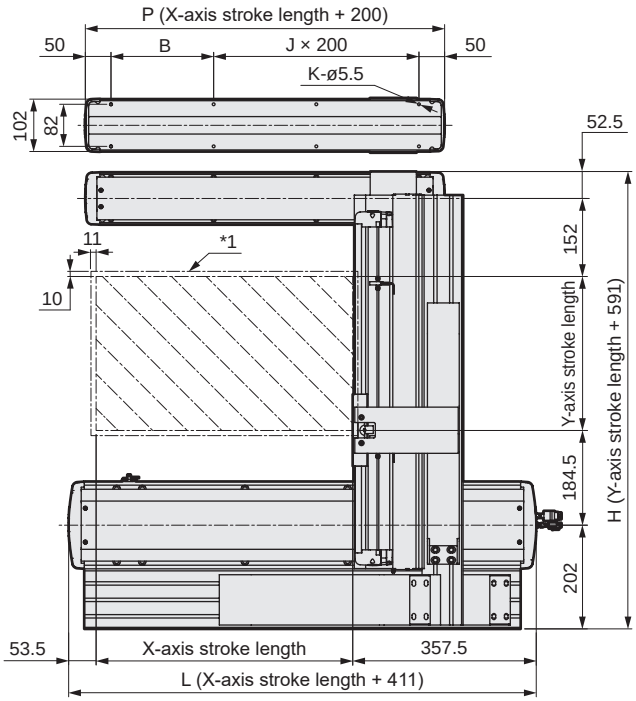

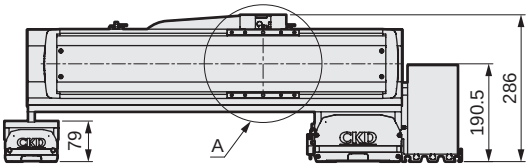

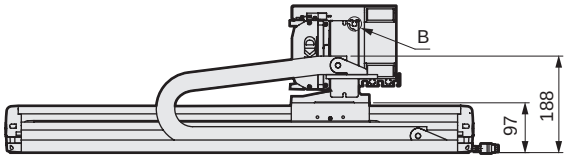

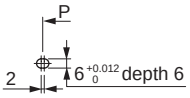

D part details

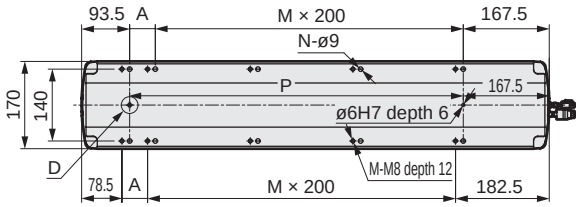

*This figure shows the dimensions when combined.

*1: Stops within the moving range and this range when returning to origin.

X-axis stroke (mm)	100	150	200	250	300	350	400	450	500	550	600	650	700	750	800	850	900	950	1000	1050	1100	1150	1200	1250
L	511	561	611	661	711	761	811	861	911	961	1011	1061	1111	1161	1211	1261	1311	1361	1411	1461	1511	1561	1611	1661
A	50	100	150	200	50	100	150	200	50	100	150	200	50	100	150	200	50	100	150	200	50	100	150	200
M	1	1	1	1	2	2	2	2	3	3	3	3	4	4	4	4	5	5	5	5	6	6	6	6
N	6	6	6	6	8	8	8	8	10	10	10	10	12	12	12	12	14	14	14	14	16	16	16	16
P	250	300	350	400	450	500	550	600	650	700	750	800	850	900	950	1000	1050	1100	1150	1200	1250	1300	1350	1400
Max. working speed (mm/s)	1000																900		800		700		600	

X-axis support guide stroke (mm)	100	150	200	250	300	350	400	450	500	550	600	650	700	750	800	850	900	950	1000	1050	1100	1150	1200	1250
P	300	350	400	450	500	550	600	650	700	750	800	850	900	950	1000	1050	1100	1150	1200	1250	1300	1350	1400	1450
B	200	50	100	150	200	50	100	150	200	50	100	150	200	50	100	150	200	50	100	150	200	50	100	150
J	0	1	1	1	1	2	2	2	2	3	3	3	3	4	4	4	4	5	5	5	5	6	6	6
K	4	6	6	6	6	8	8	8	8	10	10	10	10	12	12	12	12	14	14	14	14	16	16	16

Y-axis stroke (mm)	200	250	300	350	400	450	500	550	600	650	700	750	800	850
H	791	841	891	941	991	1041	1091	1141	1191	1241	1291	1341	1391	1441
Max. working speed (mm/s)	1000													
Max. load capacity (kg)	35										32		30	

List of attachments

[Motor mounting parts]

Model No.	Mounted motor specifications	Motor mounting direction	Mounting parts	Shipment method	Motor capacity	Motor mounting bolt	
ETS-17	M	B	Coupling	Assembled at shipment	400 W	M5	4
	Y					M5	4
ETS-14	P				200 W	M4	4

*When "O" is selected for Mounted motor specification, the motor specification code for the 1st and 2nd axes is "M" or "P".

[Origin sensor/Limit sensor]

Manufacturer	Model	Quantity
OMRON Corporation	EE-SX672	6

*Refer to page 156 for sensor specifications.

[Other attachments for axis combinations]

Cableveyor, axis combination bracket

Dimensions

ETS-760G4

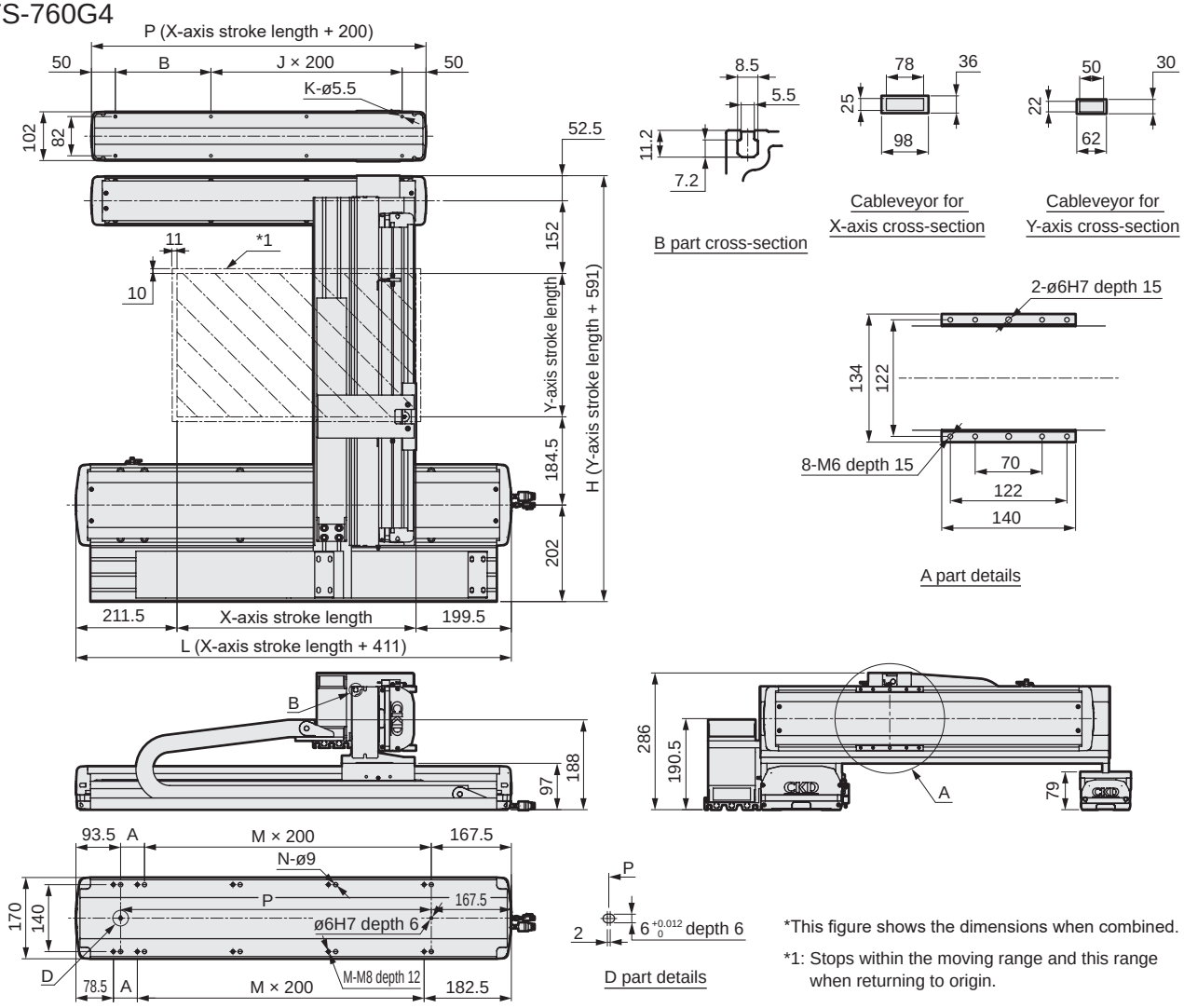

*This figure shows the dimensions when combined.

*1: Stops within the moving range and this range when returning to origin.

X-axis stroke (mm)	100	150	200	250	300	350	400	450	500	550	600	650	700	750	800	850	900	950	1000	1050	1100	1150	1200	1250
L	511	561	611	661	711	761	811	861	911	961	1011	1061	1111	1161	1211	1261	1311	1361	1411	1461	1511	1561	1611	1661
A	50	100	150	200	50	100	150	200	50	100	150	200	50	100	150	200	50	100	150	200	50	100	150	200
M	1	1	1	1	2	2	2	2	3	3	3	3	4	4	4	4	5	5	5	5	6	6	6	6
N	6	6	6	6	8	8	8	8	10	10	10	10	12	12	12	12	14	14	14	14	16	16	16	16
P	250	300	350	400	450	500	550	600	650	700	750	800	850	900	950	1000	1050	1100	1150	1200	1250	1300	1350	1400
Max. working speed (mm/s)	1000																900		800		700		600	

X-axis support guide stroke (mm)	100	150	200	250	300	350	400	450	500	550	600	650	700	750	800	850	900	950	1000	1050	1100	1150	1200	1250
P	300	350	400	450	500	550	600	650	700	750	800	850	900	950	1000	1050	1100	1150	1200	1250	1300	1350	1400	1450
B	200	50	100	150	200	50	100	150	200	50	100	150	200	50	100	150	200	50	100	150	200	50	100	150
J	0	1	1	1	1	2	2	2	2	3	3	3	3	4	4	4	4	5	5	5	5	6	6	6
K	4	6	6	6	6	8	8	8	8	10	10	10	10	12	12	12	12	14	14	14	14	16	16	16

Y-axis stroke (mm)	200	250	300	350	400	450	500	550	600	650	700	750	800	850
H	791	841	891	941	991	1041	1091	1141	1191	1241	1291	1341	1391	1441
Max. working speed (mm/s)	1000													
Max. load capacity (kg)	35										32		30	

List of attachments

[Motor mounting parts]

Model No.	Mounted motor specifications	Motor mounting direction	Mounting parts	Shipment method	Motor capacity	Motor mounting bolt	
ETS-17	M	B	Coupling	Assembled at shipment	400 W	M5	4
	Y					M5	4
ETS-14	P				200 W	M4	4

*When "O" is selected for Mounted motor specification, the motor specification code for the 1st and 2nd axes is "M" or "P".

[Origin sensor/Limit sensor]

Manufacturer	Model	Quantity
OMRON Corporation	EE-SX672	6

*Refer to page 156 for sensor specifications.

[Other attachments for axis combinations]

Cableveyor, axis combination bracket

MEMO

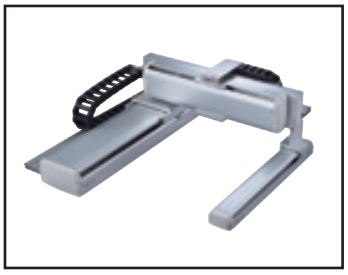

Electric actuator Ball screw drive Slider

ETS Multi-Axis Series

- Servo motor capacity: 750 W/400 W
- 2-axis combination X-Y axes/with support guide (G type)

RoHS

How to order

ETS - 870 G 1 - 040 030 - M N W

(A) (B) (C) (D) (E) (F) (G) (H)

(A) Combined axes

870	ETS-22 × ETS-17

(B) Combination

G	X-Y axes with support guide

(C) Combination direction

1 to 4	Confirm the table below.

(D) 1st axis stroke

010 to 150	100 mm to (50 mm pitch) 1500 mm

(E) 2nd axis stroke

020 to 105	200 mm to (50 mm pitch) 1050 mm

(F) Mounted motor specification *3

M, Y, P, O	Select the mounted motor specification from the table below.

(G) Brake *1

N	None

(H) Origin/Limit sensor (3 pcs × 2 axes) *2

N	None
W	Yes

*1: The brake targets the 2nd axis.
*2: The user can adjust the sensor position. (Included at shipment)
*3: When "O" is selected for Mounted motor specification, the motor specification code for the 1st and 2nd axes is "M" or "P".

(F) Mounted motor specification

Manufacturer	400 W	750 W
Mitsubishi Electric Corporation	M	M
Delta Electronics Co., Ltd.	M	M
Sanyo Denki Co., Ltd.	M	-
YASKAWA Electric Corporation	Y	Y
Keyence Corporation	Y	Y
Panasonic Corporation	P	P
OMRON Corporation	O	O

*Refer to page 164 for the recommended motor model No.

(C) Combination direction

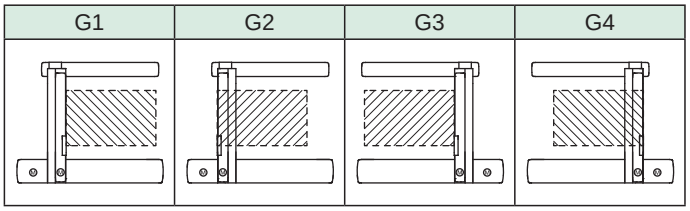

(C) Combination direction and motor mounting direction

Combined axes	Combination	Combination direction	Motor mounting direction and motor capacity			
			1st axis		2nd axis	
			Model	750 W	Model	400 W
ETS-870	G	1	ETS-22	B	ETS-17	B
		2		B		B
		3		B		B
		4		B		B

*B: Built-in mount

(D)(E) stroke length

Combined axes	Combination	1st axis			2nd axis		
		Model	Screw lead (mm)	Stroke (mm)	Model	Screw lead (mm)	Stroke (mm)
ETS-870	G	ETS-22	25	100 to 1500	ETS-17	20	200 to 1050

Grease nipple

Combined axes	Combination	Combination direction	1st axis		2nd axis	
			Model	Grease nipple position	Model	Grease nipple position
ETS-870	G	1	ETS-22	L	ETS-17	R
		2		L		L
		3		R		L
		4		R		R

*R: Right side L: Left side

Dimensions

● ETS-870G1

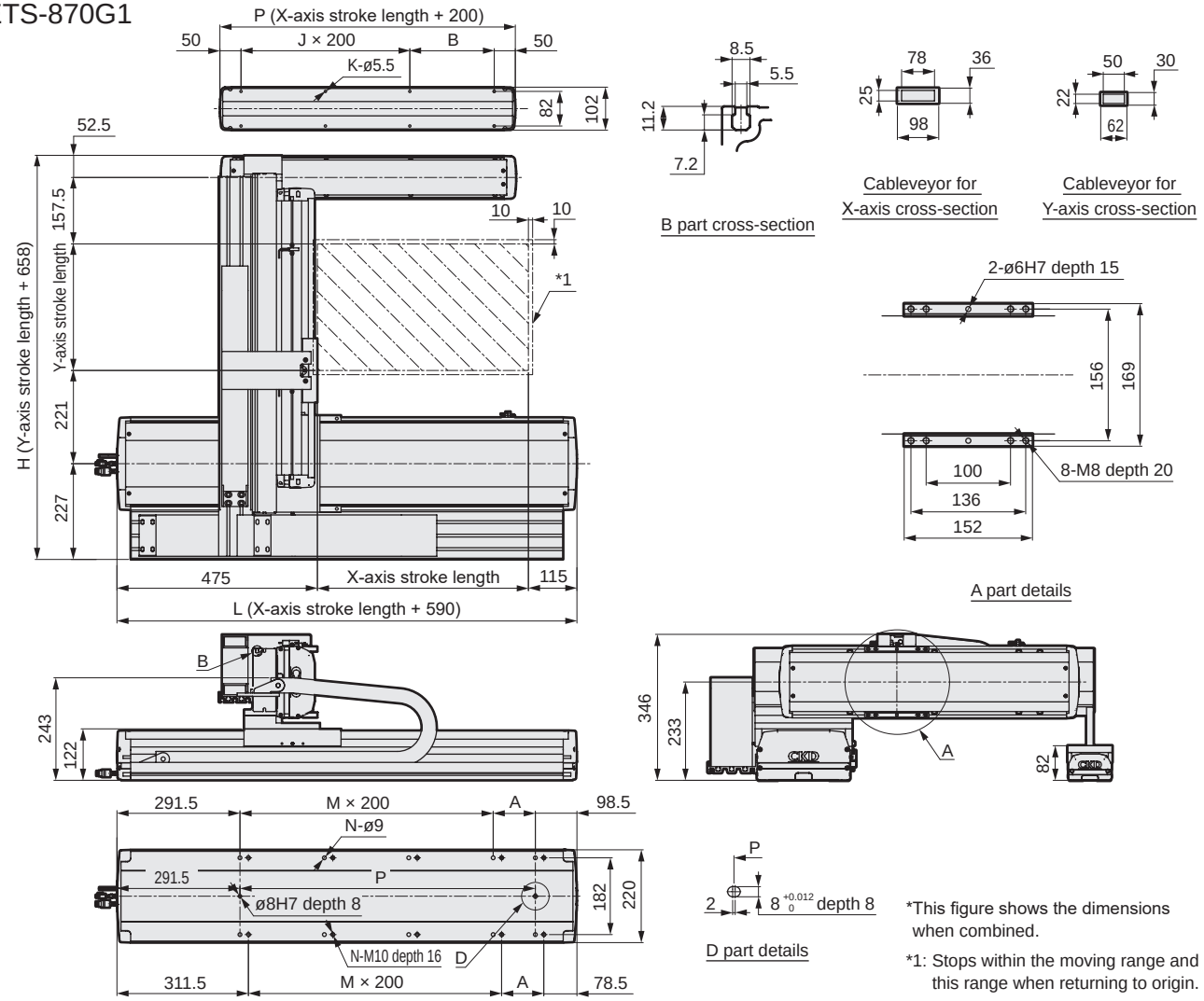

*This figure shows the dimensions when combined.

*1: Stops within the moving range and this range when returning to origin.

X-axis stroke (mm)	100	150	200	250	300	350	400	450	500	550	600	650	700	750	800	850	900	950	1000	1050	1100	1150	1200	1250	1300	1350	1400	1450	1500
L	690	740	790	840	890	940	990	1040	1090	1140	1190	1240	1290	1340	1390	1440	1490	1540	1590	1640	1690	1740	1790	1840	1890	1940	1990	2040	2090
A	100	150	200	50	100	150	200	50	100	150	200	50	100	150	200	50	100	150	200	50	100	150	200	50	100	150	200	50	100
M	1	1	1	2	2	2	2	3	3	3	3	4	4	4	4	5	5	5	5	6	6	6	6	7	7	7	7	8	8
N	6	6	6	8	8	8	8	10	10	10	10	12	12	12	12	14	14	14	14	16	16	16	16	18	18	18	18	20	20
P	300	350	400	450	500	550	600	650	700	750	800	850	900	950	1000	1050	1100	1150	1200	1250	1300	1350	1400	1450	1500	1550	1600	1650	1700
Max. working speed (mm/s)	1250																	1125		1000		875		750		625		500	

X-axis support guide stroke (mm)	100	150	200	250	300	350	400	450	500	550	600	650	700	750	800	850	900	950	1000	1050	1100	1150	1200	1250	1300	1350	1400	1450	1500
L	300	350	400	450	500	550	600	650	700	750	800	850	900	950	1000	1050	1100	1150	1200	1250	1300	1350	1400	1450	1500	1550	1600	1650	1700
A	200	50	100	150	200	50	100	150	200	50	100	150	200	50	100	150	200	50	100	150	200	50	100	150	200	50	100	150	200
M	0	1	1	1	1	2	2	2	2	3	3	3	3	4	4	4	4	5	5	5	5	6	6	6	6	7	7	7	7
N	4	6	6	6	6	8	8	8	8	10	10	10	10	12	12	12	12	14	14	14	14	16	16	16	16	18	18	18	18

Y-axis stroke (mm)	200	250	300	350	400	450	500	550	600	650	700	750	800	850	900	950	1000	1050
H	858	908	958	1008	1058	1108	1158	1208	1258	1308	1358	1408	1458	1508	1558	1608	1658	1708
Max. working speed (mm/s)	1000														900		800	
Max. load capacity (kg)	50																	

List of attachments

[Motor mounting parts]

Model No.	Mounted motor specifications	Motor mounting direction	Mounting parts	Shipment method	Motor capacity	Motor mounting bolt	
ETS-22	M	B	Coupling	Assembled at shipment	750 W	M6/M5	4
	Y					M6/M5	4
ETS-17	P				400 W	M5/M4	4

*When "O" is selected for Mounted motor specification, the motor specification code for the 1st and 2nd axes is "M" or "P".

[Origin sensor/Limit sensor]

Manufacturer	Model	Quantity
OMRON Corporation	EE-SX672	6

*Refer to page 156 for sensor specifications.

[Other attachments for axis combinations]

Cableveyor, axis combination bracket

Dimensions

● ETS-870G2

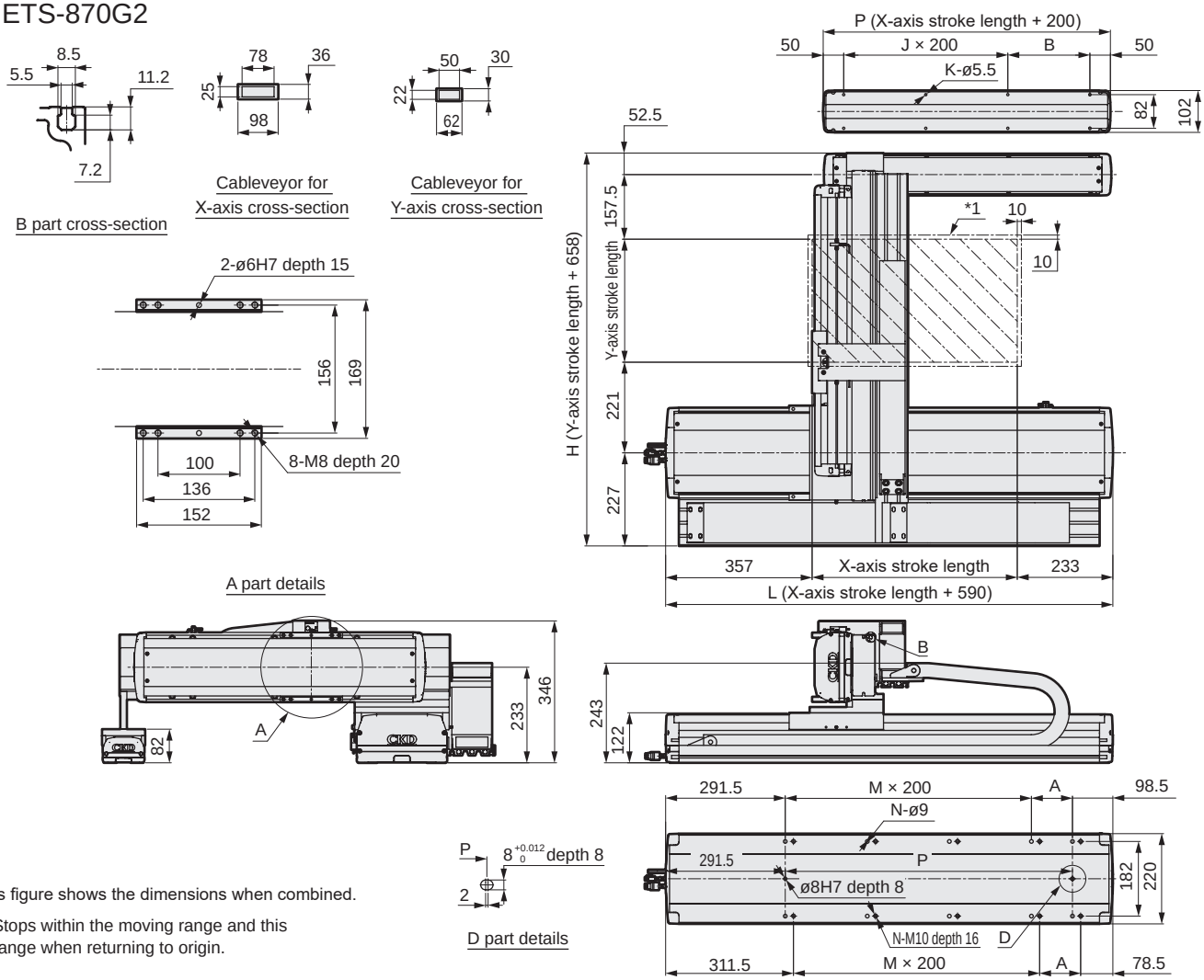

*This figure shows the dimensions when combined.

*1: Stops within the moving range and this range when returning to origin.

X-axis stroke (mm)	100	150	200	250	300	350	400	450	500	550	600	650	700	750	800	850	900	950	1000	1050	1100	1150	1200	1250	1300	1350	1400	1450	1500
L	690	740	790	840	890	940	990	1040	1090	1140	1190	1240	1290	1340	1390	1440	1490	1540	1590	1640	1690	1740	1790	1840	1890	1940	1990	2040	2090
A	100	150	200	50	100	150	200	50	100	150	200	50	100	150	200	50	100	150	200	50	100	150	200	50	100	150	200	50	100
M	1	1	1	2	2	2	2	3	3	3	3	4	4	4	4	5	5	5	5	6	6	6	6	7	7	7	7	8	8
N	6	6	6	8	8	8	8	10	10	10	10	12	12	12	12	14	14	14	14	16	16	16	16	18	18	18	18	20	20
P	300	350	400	450	500	550	600	650	700	750	800	850	900	950	1000	1050	1100	1150	1200	1250	1300	1350	1400	1450	1500	1550	1600	1650	1700
Max. working speed (mm/s)	1250																	1125		1000		875		750		625		500	

X-axis support guide stroke (mm)	100	150	200	250	300	350	400	450	500	550	600	650	700	750	800	850	900	950	1000	1050	1100	1150	1200	1250	1300	1350	1400	1450	1500
L	300	350	400	450	500	550	600	650	700	750	800	850	900	950	1000	1050	1100	1150	1200	1250	1300	1350	1400	1450	1500	1550	1600	1650	1700
A	200	50	100	150	200	50	100	150	200	50	100	150	200	50	100	150	200	50	100	150	200	50	100	150	200	50	100	150	200
M	0	1	1	1	1	2	2	2	2	3	3	3	3	4	4	4	4	5	5	5	5	6	6	6	6	7	7	7	7
N	4	6	6	6	6	8	8	8	8	10	10	10	10	12	12	12	12	14	14	14	14	16	16	16	16	18	18	18	18

Y-axis stroke (mm)	200	250	300	350	400	450	500	550	600	650	700	750	800	850	900	950	1000	1050
H	858	908	958	1008	1058	1108	1158	1208	1258	1308	1358	1408	1458	1508	1558	1608	1658	1708
Max. working speed (mm/s)	1000														900		800	
Max. load capacity (kg)	50																	

List of attachments

[Motor mounting parts]

Model No.	Mounted motor specifications	Motor mounting direction	Mounting parts	Shipment method	Motor capacity	Motor mounting bolt	
ETS-22	M	B	Coupling	Assembled at shipment	750 W	M6/M5	4
	Y					M6/M5	4
ETS-17	P				400 W	M5/M4	4

*When "O" is selected for Mounted motor specification, the motor specification code for the 1st and 2nd axes is "M" or "P".

[Origin sensor/Limit sensor]

Manufacturer	Model	Quantity
OMRON Corporation	EE-SX672	6

*Refer to page 156 for sensor specifications.

[Other attachments for axis combinations]

Cableveyor, axis combination bracket

Dimensions

● ETS-870G3

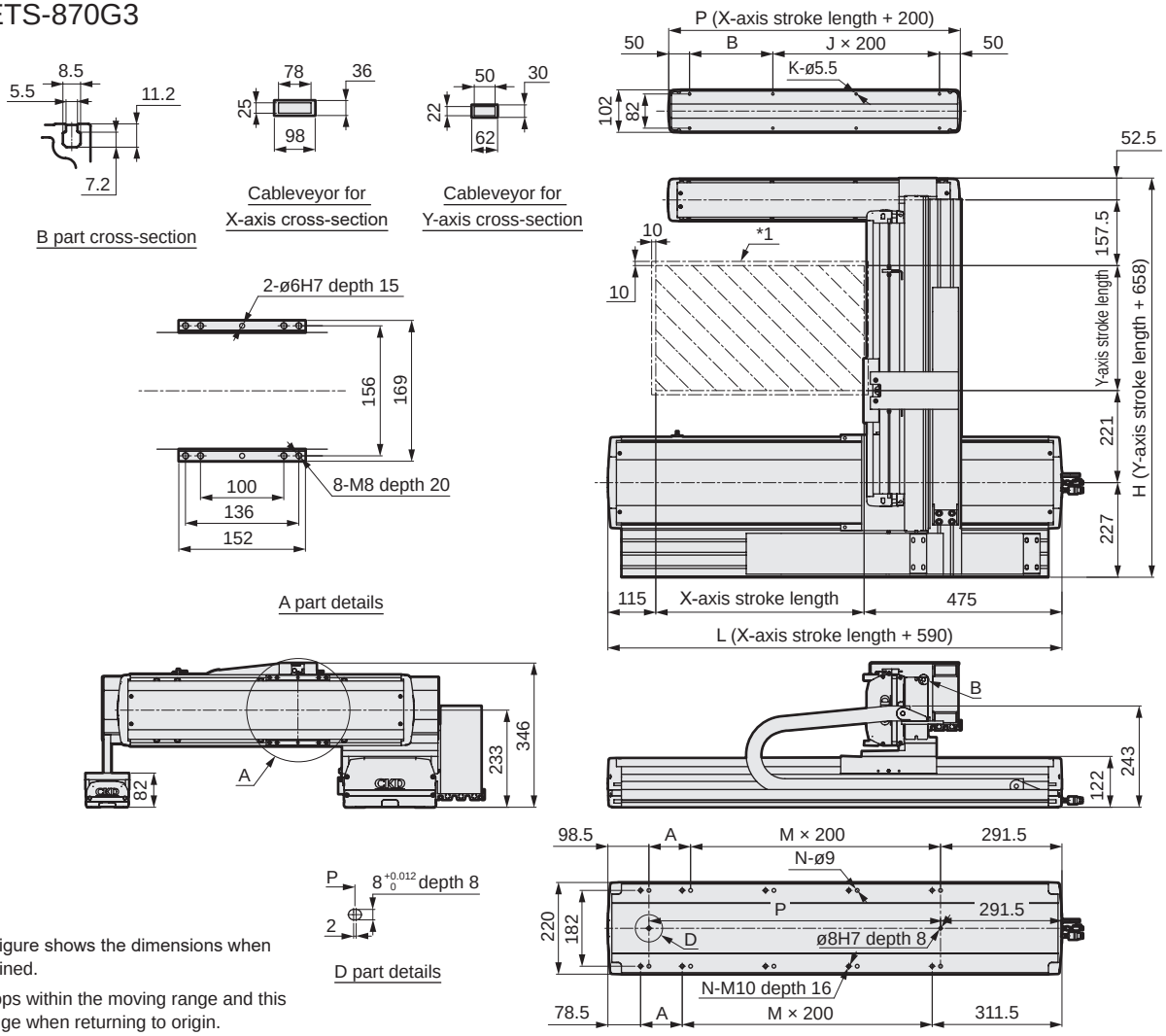

*This figure shows the dimensions when combined.

*1: Stops within the moving range and this range when returning to origin.

X-axis stroke (mm)	100	150	200	250	300	350	400	450	500	550	600	650	700	750	800	850	900	950	1000	1050	1100	1150	1200	1250	1300	1350	1400	1450	1500
L	690	740	790	840	890	940	990	1040	1090	1140	1190	1240	1290	1340	1390	1440	1490	1540	1590	1640	1690	1740	1790	1840	1890	1940	1990	2040	2090
A	100	150	200	50	100	150	200	50	100	150	200	50	100	150	200	50	100	150	200	50	100	150	200	50	100	150	200	50	100
M	1	1	1	2	2	2	2	3	3	3	3	4	4	4	4	5	5	5	5	6	6	6	6	7	7	7	7	8	8
N	6	6	6	8	8	8	8	10	10	10	10	12	12	12	12	14	14	14	14	16	16	16	16	18	18	18	18	20	20
P	300	350	400	450	500	550	600	650	700	750	800	850	900	950	1000	1050	1100	1150	1200	1250	1300	1350	1400	1450	1500	1550	1600	1650	1700
Max. working speed (mm/s)	1250																	1125		1000		875		750		625		500	

X-axis support guide stroke (mm)	100	150	200	250	300	350	400	450	500	550	600	650	700	750	800	850	900	950	1000	1050	1100	1150	1200	1250	1300	1350	1400	1450	1500
L	300	350	400	450	500	550	600	650	700	750	800	850	900	950	1000	1050	1100	1150	1200	1250	1300	1350	1400	1450	1500	1550	1600	1650	1700
A	200	50	100	150	200	50	100	150	200	50	100	150	200	50	100	150	200	50	100	150	200	50	100	150	200	50	100	150	200
M	0	1	1	1	1	2	2	2	2	3	3	3	3	4	4	4	4	5	5	5	5	6	6	6	6	7	7	7	7
N	4	6	6	6	6	8	8	8	8	10	10	10	10	12	12	12	12	14	14	14	14	16	16	16	16	18	18	18	18

Y-axis stroke (mm)	200	250	300	350	400	450	500	550	600	650	700	750	800	850	900	950	1000	1050
H	858	908	958	1008	1058	1108	1158	1208	1258	1308	1358	1408	1458	1508	1558	1608	1658	1708
Max. working speed (mm/s)	1000														900		800	
Max. load capacity (kg)	50																	

List of attachments

[Motor mounting parts]

Model No.	Mounted motor specifications	Motor mounting direction	Mounting parts	Shipment method	Motor capacity	Motor mounting bolt	
ETS-22	M	B	Coupling	Assembled at shipment	750 W	M6/M5	4
	Y					M6/M5	4
ETS-17	P				400 W	M5/M4	4

*When "O" is selected for Mounted motor specification, the motor specification code for the 1st and 2nd axes is "M" or "P".

[Origin sensor/Limit sensor]

Manufacturer	Model	Quantity
OMRON Corporation	EE-SX672	6

*Refer to page 156 for sensor specifications.

[Other attachments for axis combinations]

Cableveyor, axis combination bracket

Dimensions

● ETS-870G4

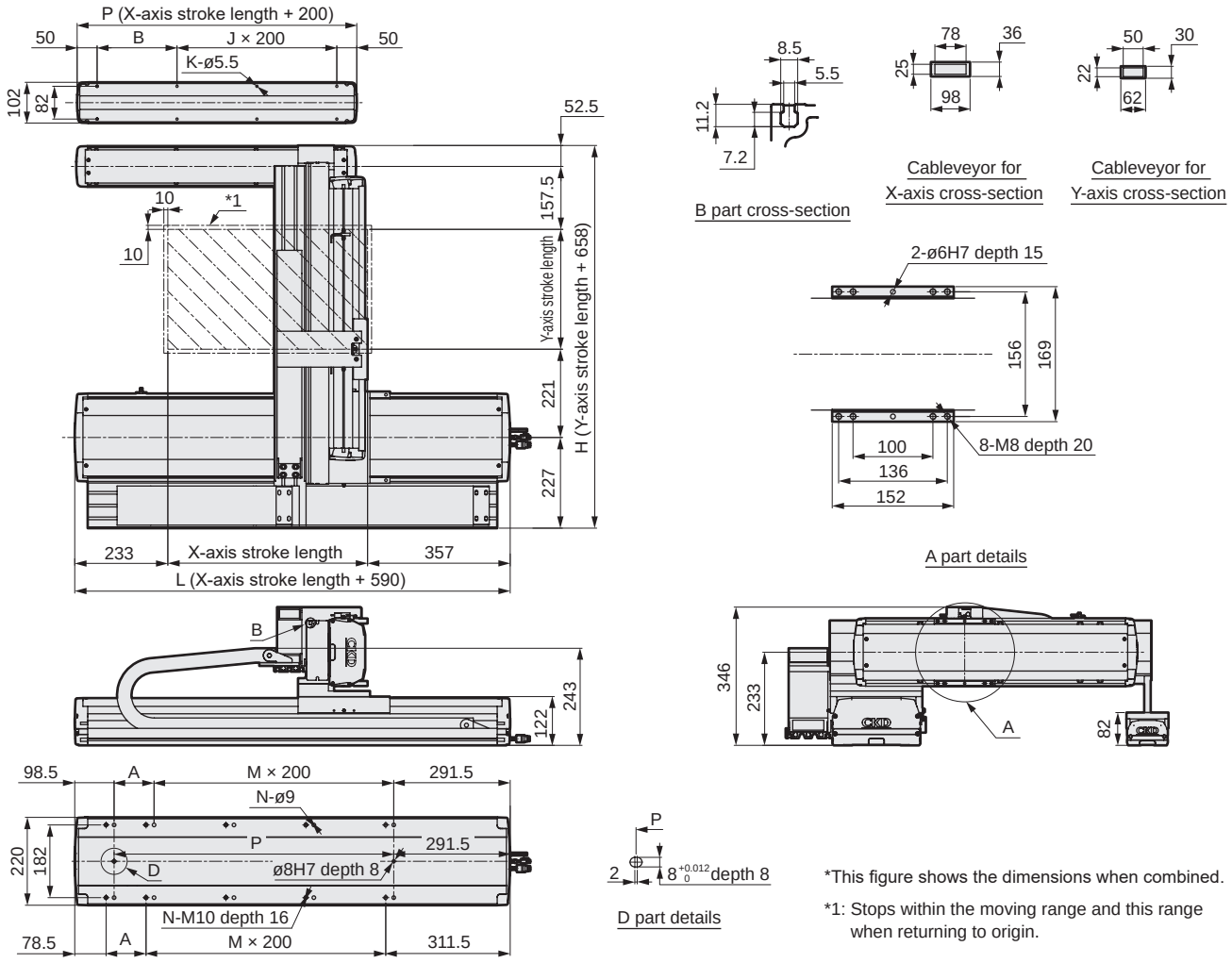

*This figure shows the dimensions when combined.

*1: Stops within the moving range and this range when returning to origin.

X-axis stroke (mm)	100	150	200	250	300	350	400	450	500	550	600	650	700	750	800	850	900	950	1000	1050	1100	1150	1200	1250	1300	1350	1400	1450	1500
L	690	740	790	840	890	940	990	1040	1090	1140	1190	1240	1290	1340	1390	1440	1490	1540	1590	1640	1690	1740	1790	1840	1890	1940	1990	2040	2090
A	100	150	200	50	100	150	200	50	100	150	200	50	100	150	200	50	100	150	200	50	100	150	200	50	100	150	200	50	100
M	1	1	1	2	2	2	2	3	3	3	3	4	4	4	4	5	5	5	5	6	6	6	6	7	7	7	7	8	8
N	6	6	6	8	8	8	8	10	10	10	10	12	12	12	12	14	14	14	14	16	16	16	16	18	18	18	18	20	20
P	300	350	400	450	500	550	600	650	700	750	800	850	900	950	1000	1050	1100	1150	1200	1250	1300	1350	1400	1450	1500	1550	1600	1650	1700
Max. working speed (mm/s)	1250																	1125		1000		875		750		625		500	

X-axis support guide stroke (mm)	100	150	200	250	300	350	400	450	500	550	600	650	700	750	800	850	900	950	1000	1050	1100	1150	1200	1250	1300	1350	1400	1450	1500
L	300	350	400	450	500	550	600	650	700	750	800	850	900	950	1000	1050	1100	1150	1200	1250	1300	1350	1400	1450	1500	1550	1600	1650	1700
A	200	50	100	150	200	50	100	150	200	50	100	150	200	50	100	150	200	50	100	150	200	50	100	150	200	50	100	150	200
M	0	1	1	1	1	2	2	2	2	3	3	3	3	4	4	4	4	5	5	5	5	6	6	6	6	7	7	7	7
N	4	6	6	6	6	8	8	8	8	10	10	10	10	12	12	12	12	14	14	14	14	16	16	16	16	18	18	18	18

Y-axis stroke (mm)	200	250	300	350	400	450	500	550	600	650	700	750	800	850	900	950	1000	1050
H	858	908	958	1008	1058	1108	1158	1208	1258	1308	1358	1408	1458	1508	1558	1608	1658	1708
Max. working speed (mm/s)	1000														900		800	
Max. load capacity (kg)	50																	

List of attachments

[Motor mounting parts]

Model No.	Mounted motor specifications	Motor mounting direction	Mounting parts	Shipment method	Motor capacity	Motor mounting bolt	
ETS-22	M	B	Coupling	Assembled at shipment	750 W	M6/M5	4
	Y					M6/M5	4
ETS-17	P				400 W	M5/M4	4

*When "O" is selected for Mounted motor specification, the motor specification code for the 1st and 2nd axes is "M" or "P".

[Origin sensor/Limit sensor]

Manufacturer	Model	Quantity
OMRON Corporation	EE-SX672	6

*Refer to page 156 for sensor specifications.

[Other attachments for axis combinations]

Cableveyor, axis combination bracket

MEMO



Electric actuator Ball screw drive Slider

ETS Multi-Axis Series

- Servo motor capacity: 200 W/400 W/750 W
- 2-axis combination X-Z axes (P type)

RoHS

How to order

ETS - 650 P 1 - 040 030 - M B W

Ⓐ Combined axes

650	ETS-14 × ETS-13
760	ETS-17 × ETS-14
880	ETS-22 × ETS-22

Ⓑ Combination

P	X-Z axes

Ⓒ Combination direction

1, 2	Confirm the table below.

Ⓓ 1st axis stroke

010 to 150	100 mm to 1500 mm (50 mm pitch)

Ⓔ 2nd axis stroke

005 to 095	50 mm to 950 mm (50 mm pitch)

Ⓕ Mounted motor specification *3

M	Select the mounted motor specification from the table below.
Y	
P	
O	

Ⓖ Brake *1

B	Yes

Ⓗ Origin/Limit sensor (3 pcs × 2 axes) *2

N	None
W	Yes

*1: The brake targets the 2nd axis.
*2: The user can adjust the sensor position. (Included at shipment)
*3: When "O" is selected for Mounted motor specification, the motor specification code for the 1st and 2nd axes is "M" or "P".

Ⓒ Combination direction

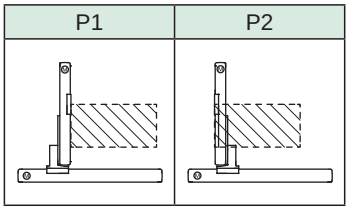

Ⓕ Mounted motor specification

Manufacturer	200 W	400 W	750 W
Mitsubishi Electric Corporation	M	M	M
Delta Electronics Co., Ltd.	M	M	M
Sanyo Denki Co., Ltd.	M	M	-
YASKAWA Electric Corporation	Y	Y	Y
Keyence Corporation	Y	Y	Y
Panasonic Corporation	P	P	P
OMRON Corporation	O	O	O

*Refer to page 164 for the recommended motor model No.

Axis combination specifications

Ⓒ Combination direction and motor mounting direction

Combined axes	Combination	Combination direction	Motor mounting direction and motor capacity							
			1st axis				2nd axis			
			Model	200 W	400 W	750 W	Model	200 W	400 W	750 W
ETS-650	P	1.2	ETS-14	-	B	-	ETS-13	B (with brake)	-	-
ETS-760	P	1.2	ETS-17	-	B	-	ETS-14	-	B (with brake)	-
ETS-880	P	1.2	ETS-22	-	-	B	ETS-22	-	-	B (with brake)

*B: Built-in mount

ⒹⒺ stroke length

Combined axes	Combination	1st axis			2nd axis		
		Model	Screw lead (mm)	Stroke (mm)	Model	Screw lead (mm)	Stroke (mm)
ETS-650	P	ETS-14	20	100 to 1050	ETS-13	10	50 to 550
ETS-760		ETS-17	20	100 to 1250	ETS-14	10	50 to 650
ETS-880		ETS-22	25	100 to 1500	ETS-22	15	50 to 950

Grease nipple

Combined axes	Combination	Combination direction	1st axis		2nd axis	
			Model	Grease nipple position	Model	Grease nipple position
ETS-650	P	1	ETS-14	L	ETS-13	L
		2		R		L
ETS-760	P	1	ETS-17	L	ETS-14	L
		2		R		L
ETS-880	P	1	ETS-22	L	ETS-22	L
		2		R		L



Electric actuator Ball screw drive Slider

ETS Multi-Axis Series

- Servo motor capacity: 400 W/200 W
- 2-axis combination X-Z axes (P type)

RoHS

How to order

ETS - 650 P 1 - 040 030 - M B W

(A) (B) (C) (D) (E) (F) (G) (H)

(A) Combined axes

650	ETS-14 × ETS-13

(B) Combination

P	X-Z axes

(C) Combination direction

1, 2	Confirm the table below.

(D) 1st axis stroke

010 to 105	100 mm to 1050 mm (50 mm pitch)

(E) 2nd axis stroke

005 to 055	50 mm to 550 mm (50 mm pitch)

(F) Mounted motor specification *3

M, Y, P, O	Select the mounted motor specification from the table below.

(G) Brake *1

B	Yes

(H) Origin/Limit sensor (3 pcs × 2 axes) *2

N	None
W	Yes

*1: The brake targets the 2nd axis.
*2: The user can adjust the sensor position. (Included at shipment)
*3: When "O" is selected for Mounted motor specification, the motor specification code for the 1st and 2nd axes is "M" or "P".

(C) Combination direction

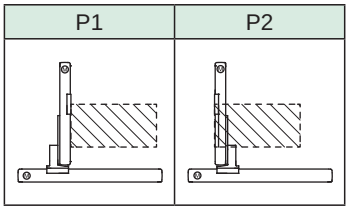

(F) Mounted motor specification

Manufacturer	200 W	400 W
Mitsubishi Electric Corporation	M	M
Delta Electronics Co., Ltd.	M	M
Sanyo Denki Co., Ltd.	M	M
YASKAWA Electric Corporation	Y	Y
Keyence Corporation	Y	Y
Panasonic Corporation	P	P
OMRON Corporation	O	O

*Refer to page 164 for the recommended motor model No.

(C) Combination direction and motor mounting direction

Combined axes	Combination	Combination direction	Motor mounting direction and motor capacity			
			1st axis		2nd axis	
			Model	400 W	Model	200 W
ETS-650	P	1	ETS-14	B	ETS-13	B (with brake)
		2		B		B (with brake)

*B: Built-in mount

(D)(E) stroke length

Combined axes	Combination	1st axis			2nd axis		
		Model	Screw lead (mm)	Stroke (mm)	Model	Screw lead (mm)	Stroke (mm)
ETS-650	P	ETS-14	20	100 to 1050	ETS-13	10	50 to 550

Grease nipple

Combined axes	Combination	Combination direction	1st axis		2nd axis	
			Model	Grease nipple position	Model	Grease nipple position
ETS-650	P	1	ETS-14	L	ETS-13	L
		2		R		L

*R: Right side L: Left side

Dimensions

● ETS-650P1

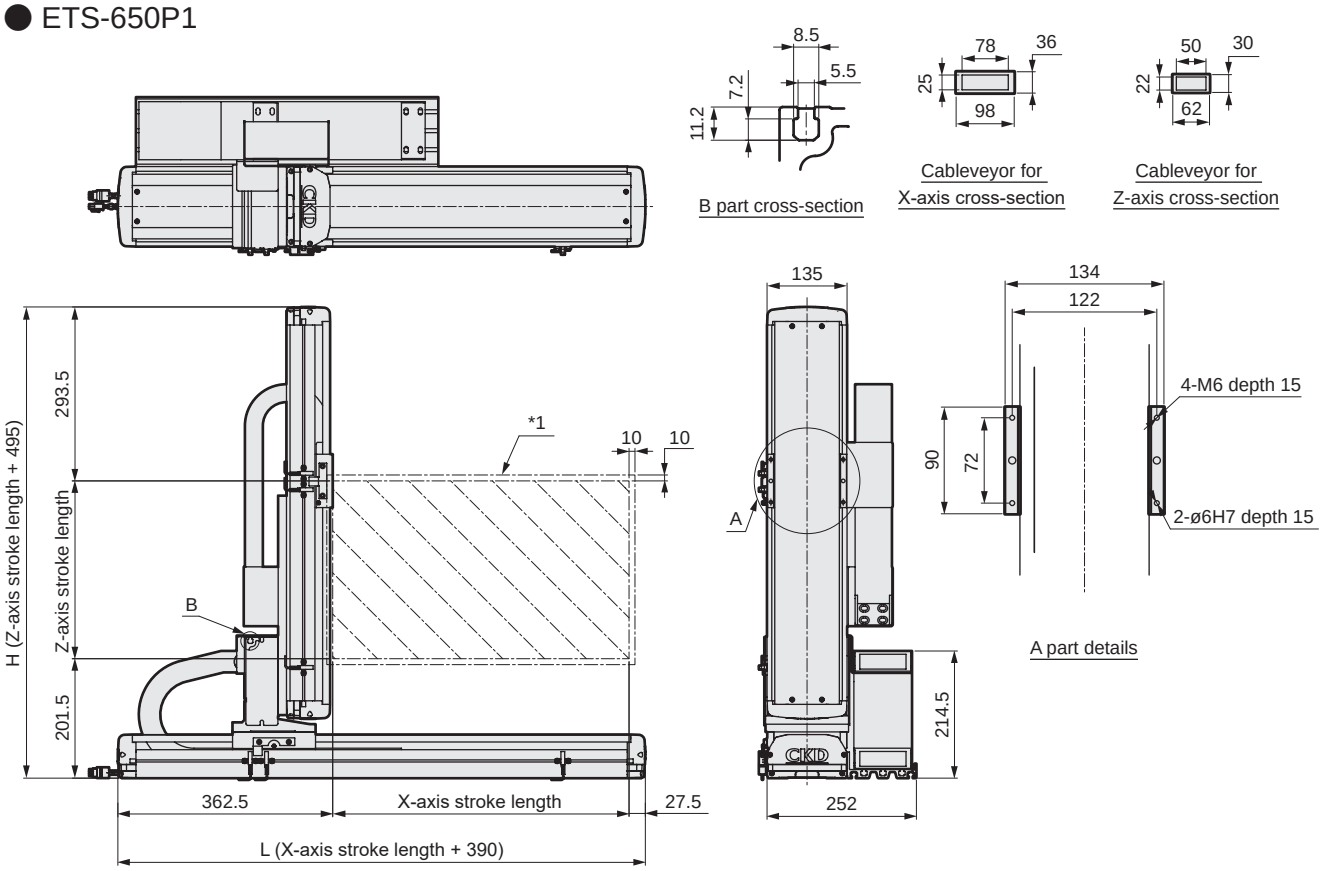

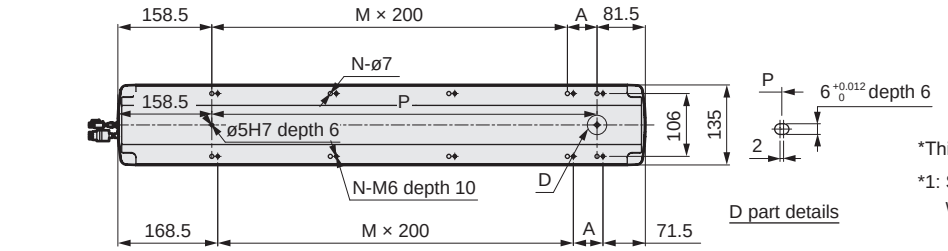

*This figure shows the dimensions when combined.

*1: Stops within the moving range and this range when returning to origin.

X-axis stroke (mm)	100	150	200	250	300	350	400	450	500	550	600	650	700	750	800	850	900	950	1000	1050
L	490	540	590	640	690	740	790	840	890	940	990	1040	1090	1140	1190	1240	1290	1340	1390	1440
A	50	100	150	200	50	100	150	200	50	100	150	200	50	100	150	200	50	100	150	200
M	1	1	1	1	2	2	2	2	3	3	3	3	4	4	4	4	5	5	5	5
N	6	6	6	6	8	8	8	8	10	10	10	10	12	12	12	12	14	14	14	14
P	250	300	350	400	450	500	550	600	650	700	750	800	850	900	950	1000	1050	1100	1150	1200
Max. working speed (mm/s)	1000														900	800	700	600	500	400

Z-axis stroke (mm)	50	100	150	200	250	300	350	400	450	500	550
H	545	595	645	695	745	795	845	895	945	995	1045
Max. working speed (mm/s)	500										
Max. load capacity (kg)	10										

List of attachments

[Motor mounting parts]

Model No.	Mounted motor specifications	Motor mounting direction	Mounting parts	Shipment method	Motor capacity	Motor mounting bolt	
ETS-14	M	B	Coupling	Assembled at shipment	400 W	M5	4
	Y					M5	4
ETS-13	P				200 W	M4	4

*When "O" is selected for Mounted motor specification, the motor specification code for the 1st and 2nd axes is "M" or "P".

[Origin sensor/Limit sensor]

Manufacturer	Model	Quantity
OMRON Corporation	EE-SX672	6

*Refer to page 156 for sensor specifications.

[Other attachments for axis combinations]

Cableveyor, axis combination bracket

Dimensions

● ETS-650P2

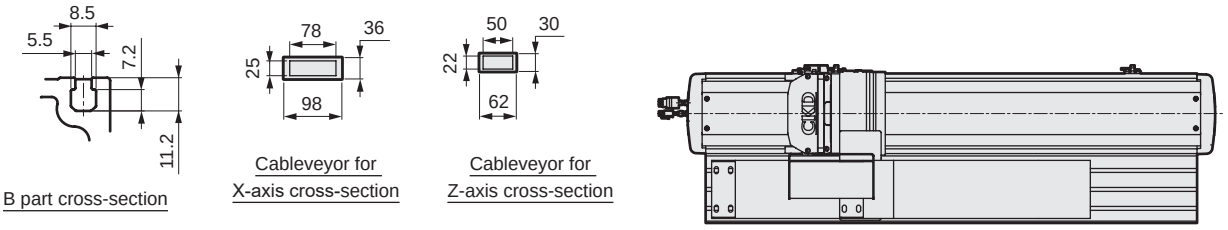

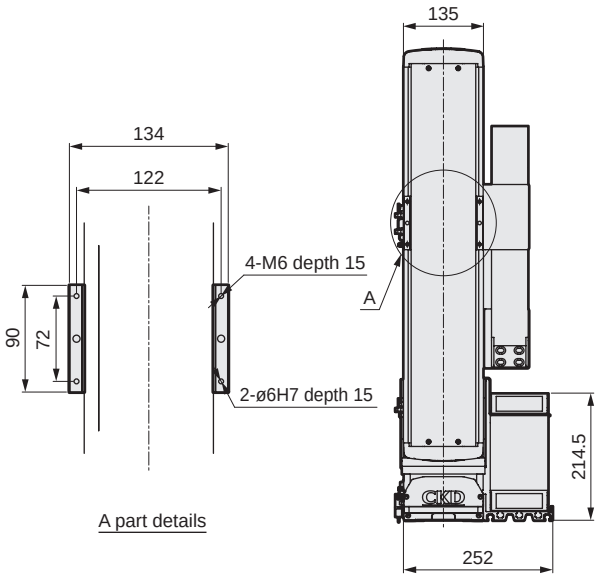

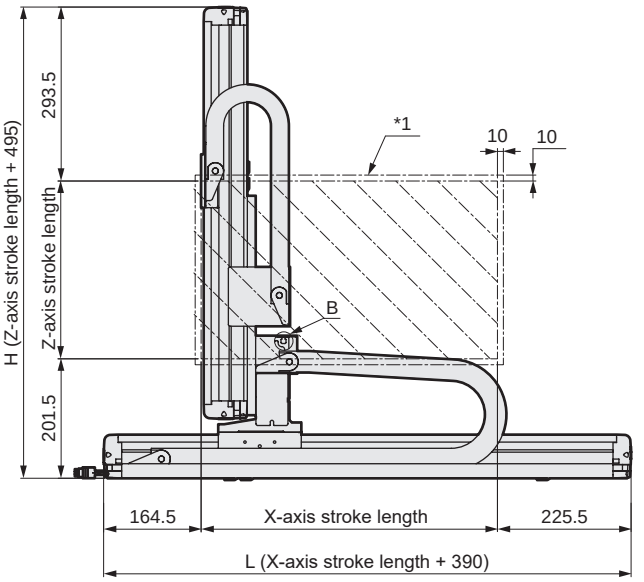

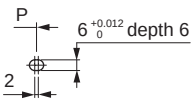

D part details

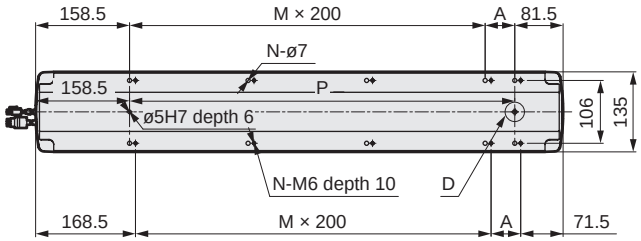

*This figure shows the dimensions when combined.

*1: Stops within the moving range and this range when returning to origin.

X-axis stroke (mm)	100	150	200	250	300	350	400	450	500	550	600	650	700	750	800	850	900	950	1000	1050
L	490	540	590	640	690	740	790	840	890	940	990	1040	1090	1140	1190	1240	1290	1340	1390	1440
A	50	100	150	200	50	100	150	200	50	100	150	200	50	100	150	200	50	100	150	200
M	1	1	1	1	2	2	2	2	3	3	3	3	4	4	4	4	5	5	5	5
N	6	6	6	6	8	8	8	8	10	10	10	10	12	12	12	12	14	14	14	14
P	250	300	350	400	450	500	550	600	650	700	750	800	850	900	950	1000	1050	1100	1150	1200
Max. working speed (mm/s)	1000														900	800	700	600	500	400

Z-axis stroke (mm)	50	100	150	200	250	300	350	400	450	500	550
H	545	595	645	695	745	795	845	895	945	995	1045
Max. working speed (mm/s)	500										
Max. load capacity (kg)	10										

List of attachments

[Motor mounting parts]

Model No.	Mounted motor specifications	Motor mounting direction	Mounting parts	Shipment method	Motor capacity	Motor mounting bolt	
ETS-14	M	B	Coupling	Assembled at shipment	400 W	M5	4
	Y					M5	4
ETS-13	P				200 W	M4	4

*When "O" is selected for Mounted motor specification, the motor specification code for the 1st and 2nd axes is "M" or "P".

[Origin sensor/Limit sensor]

Manufacturer	Model	Quantity
OMRON Corporation	EE-SX672	6

*Refer to page 156 for sensor specifications.

[Other attachments for axis combinations]

Cableveyor, axis combination bracket

MEMO



Electric actuator Ball screw drive Slider

ETS Multi-Axis Series

- Servo motor capacity: 400 W
- 2-axis combination X-Z axes (P type)

RoHS

How to order

ETS - 760 P 1 - 040 030 - M B W

Ⓐ Combined axes

760	ETS-17 × ETS-14

Ⓑ Combination

P	X-Z axes

Ⓒ Combination direction

1, 2	Confirm the table below.

Ⓓ 1st axis stroke

010 to 125	100 mm to (50 mm pitch) 1250 mm

Ⓔ 2nd axis stroke

005 to 065	50 mm to (50 mm pitch) 650 mm

Ⓕ Mounted motor specification *3

M, Y, P, O	Select the mounted motor specification from the table below.

Ⓖ Brake *1

B	Yes

Ⓗ Origin/Limit sensor (3 pcs × 2 axes) *2

N	None
W	Yes

*1: The brake targets the 2nd axis.
*2: The user can adjust the sensor position. (Included at shipment)
*3: When "O" is selected for Mounted motor specification, the motor specification code for the 1st and 2nd axes is "M" or "P".

Ⓕ Mounted motor specification

Manufacturer	400 W
Mitsubishi Electric Corporation	M
Delta Electronics Co., Ltd.	M
Sanyo Denki Co., Ltd.	M
YASKAWA Electric Corporation	Y
Keyence Corporation	Y
Panasonic Corporation	P
OMRON Corporation	O

*Refer to page 164 for the recommended motor model No.

Ⓒ Combination direction

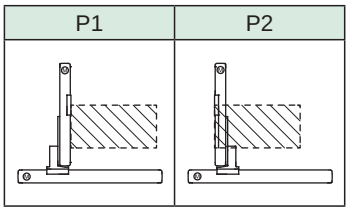

Ⓒ Combination direction and motor mounting direction

Combined axes	Combination	Combination direction	Motor mounting direction and motor capacity			
			1st axis		2nd axis	
			Model	400 W	Model	400 W
ETS-760	P	1	ETS-17	B	ETS-14	B (with brake)
		2		B		B (with brake)

ⒹⒺ stroke length

Combined axes	Combination	1st axis			2nd axis		
		Model	Screw lead (mm)	Stroke (mm)	Model	Screw lead (mm)	Stroke (mm)
ETS-760	P	ETS-17	20	100 to 1250	ETS-14	10	50 to 650

Grease nipple

Combined axes	Combination	Combination direction	1st axis		2nd axis	
			Model	Grease nipple position	Model	Grease nipple position
ETS-760	P	1	ETS-17	L	ETS-14	L
		2		R		L

*R: Right side L: Left side

Dimensions

● ETS-760P1

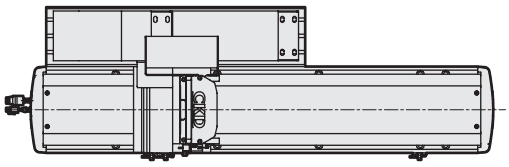

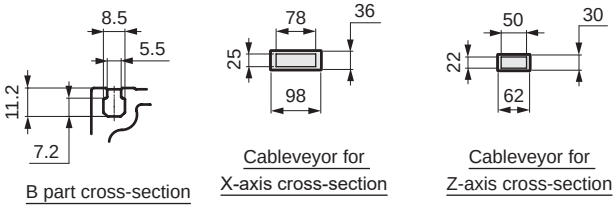

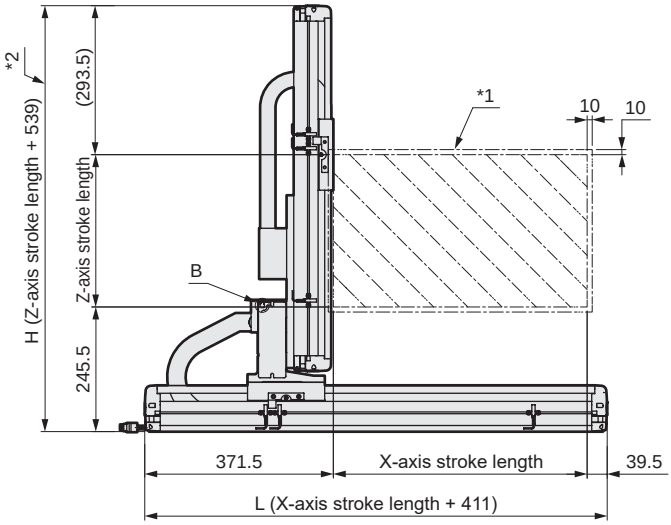

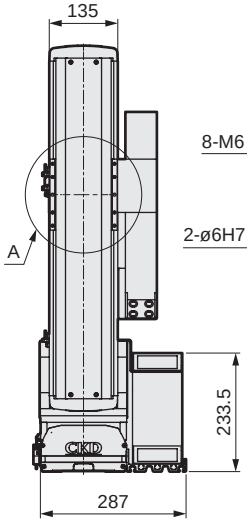

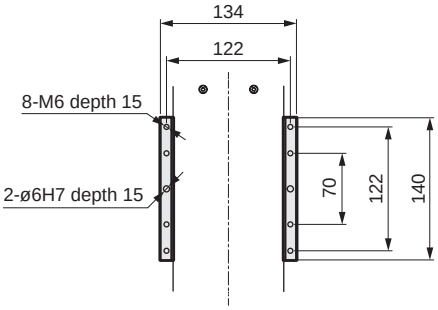

A part details

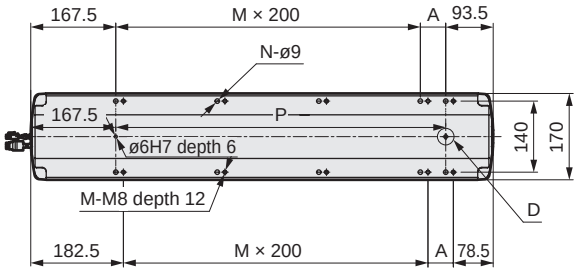

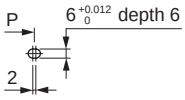

D part details

*This figure shows the dimensions when combined.

*1: Stops within the moving range and this range when returning to origin.

*2: The length of the Z-axis changes depending on the manufacturer of the motor installed.

X-axis stroke (mm)	100	150	200	250	300	350	400	450	500	550	600	650	700	750	800	850	900	950	1000	1050	1100	1150	1200	1250
L	511	561	611	661	711	761	811	861	911	961	1011	1061	1111	1161	1211	1261	1311	1361	1411	1461	1511	1561	1611	1661
A	50	100	150	200	50	100	150	200	50	100	150	200	50	100	150	200	50	100	150	200	50	100	150	200
M	1	1	1	1	2	2	2	2	3	3	3	3	4	4	4	4	5	5	5	5	6	6	6	6
N	6	6	6	6	8	8	8	8	10	10	10	10	12	12	12	12	14	14	14	14	16	16	16	16
P	250	300	350	400	450	500	550	600	650	700	750	800	850	900	950	1000	1050	1100	1150	1200	1250	1300	1350	1400
Max. working speed (mm/s)	1000																900		800		700		600	

Z-axis stroke (mm)	50	100	150	200	250	300	350	400	450	500	550	600	650
H	589	639	689	739	789	839	889	939	989	1039	1089	1139	1189
Max. working speed (mm/s)	500												
Max. load capacity (kg)	22												

List of attachments

[Motor mounting parts]

Model No.	Mounted motor specifications	Motor mounting direction	Mounting parts	Shipment method	Motor capacity	Motor mounting bolt	
ETS-17	M	B	Coupling	Assembled at shipment	400 W	M5	4
	Y					M5	4
ETS-14	P					M4	4

*When "O" is selected for Mounted motor specification, the motor specification code for the 1st and 2nd axes is "M" or "P".

[Origin sensor/Limit sensor]

Manufacturer	Model	Quantity
OMRON Corporation	EE-SX672	6

*Refer to page 156 for sensor specifications.

[Other attachments for axis combinations]

Cableveyor, axis combination bracket

Dimensions

● ETS-760P2

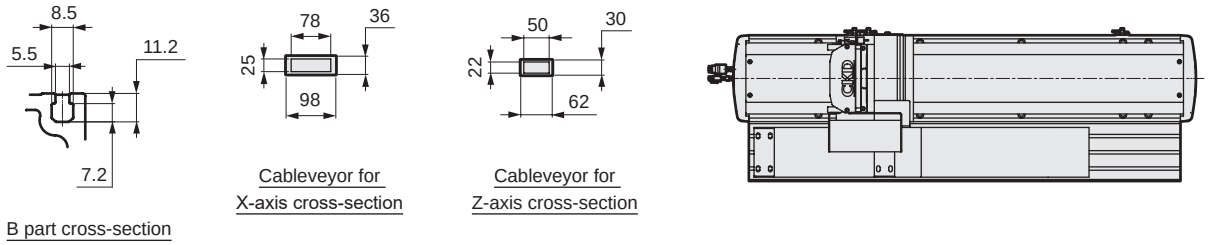

B part cross-section

Cableveyor for X-axis cross-section

Cableveyor for Z-axis cross-section

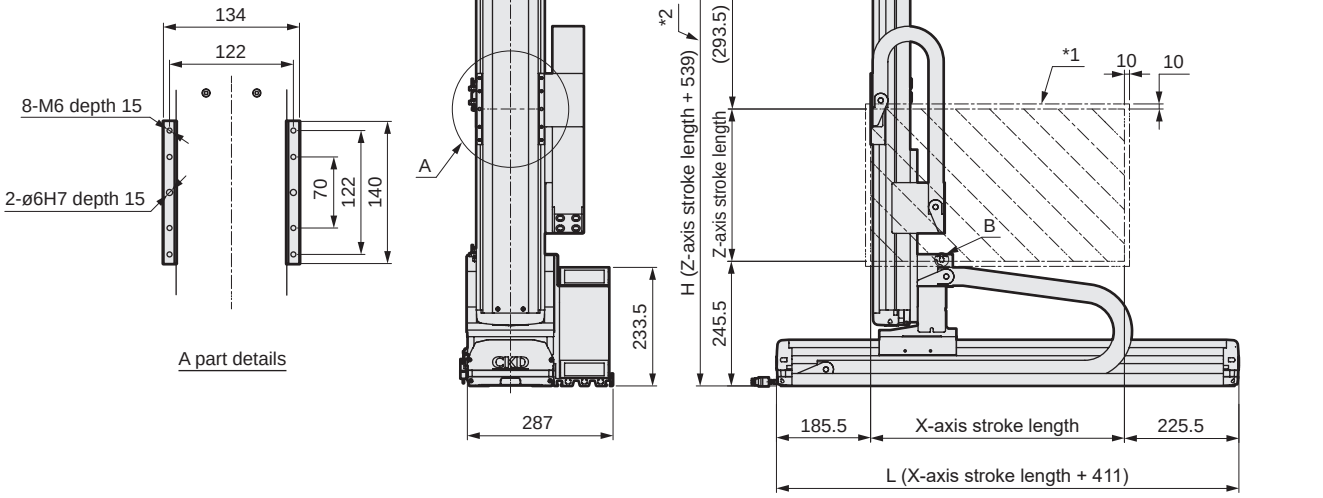

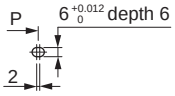

D part details

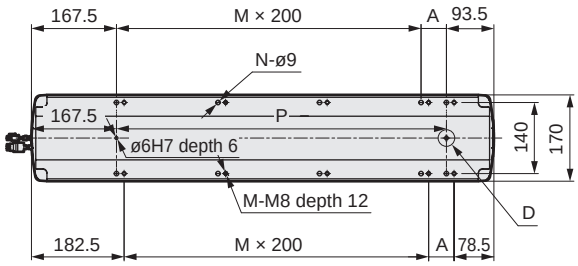

*This figure shows the dimensions when combined.

*1: Stops within the moving range and this range when returning to origin.

*2: The length of the Z-axis changes depending on the manufacturer of the motor installed.

X-axis stroke (mm)	100	150	200	250	300	350	400	450	500	550	600	650	700	750	800	850	900	950	1000	1050	1100	1150	1200	1250
L	511	561	611	661	711	761	811	861	911	961	1011	1061	1111	1161	1211	1261	1311	1361	1411	1461	1511	1561	1611	1661
A	50	100	150	200	50	100	150	200	50	100	150	200	50	100	150	200	50	100	150	200	50	100	150	200
M	1	1	1	1	2	2	2	2	3	3	3	3	4	4	4	4	5	5	5	5	6	6	6	6
N	6	6	6	6	8	8	8	8	10	10	10	10	12	12	12	12	14	14	14	14	16	16	16	16
P	250	300	350	400	450	500	550	600	650	700	750	800	850	900	950	1000	1050	1100	1150	1200	1250	1300	1350	1400
Max. working speed (mm/s)	1000																900		800		700		600	

Z-axis stroke (mm)	50	100	150	200	250	300	350	400	450	500	550	600	650
H	589	639	689	739	789	839	889	939	989	1039	1089	1139	1189
Max. working speed (mm/s)	500												
Max. load capacity (kg)	22												

List of attachments

[Motor mounting parts]

Model No.	Mounted motor specifications	Motor mounting direction	Mounting parts	Shipment method	Motor capacity	Motor mounting bolt	
ETS-17	M	B	Coupling	Assembled at shipment	400 W	M5	4
	Y					M5	4
ETS-14	P					M4	4

*When "O" is selected for Mounted motor specification, the motor specification code for the 1st and 2nd axes is "M" or "P".

[Origin sensor/Limit sensor]

Manufacturer	Model	Quantity
OMRON Corporation	EE-SX672	6

*Refer to page 156 for sensor specifications.

[Other attachments for axis combinations]

Cableveyor, axis combination bracket

MEMO



Electric actuator Ball screw drive Slider

ETS Multi-Axis Series

- Servo motor capacity: 750 W
- 2-axis combination X-Z axes (P type)

RoHS

How to order

ETS - 880 P 1 - 040 030 - M B W

Ⓐ Combined axes

880	ETS-22 × ETS-22

Ⓑ Combination

P	X-Z axes

Ⓒ Combination direction

1, 2	Confirm the table below.

Ⓓ 1st axis stroke

010 to 150	100 mm to 1500 mm (50 mm pitch)

Ⓔ 2nd axis stroke

005 to 095	50 mm to 950 mm (50 mm pitch)

Ⓕ Mounted motor specification *3

M, Y, P, O	Select the mounted motor specification from the table below.

Ⓖ Brake *1

B	Yes

Ⓗ Origin/Limit sensor (3 pcs × 2 axes) *2

N	None
W	Yes

*1: The brake targets the 2nd axis.
*2: The user can adjust the sensor position. (Included at shipment)
*3: When "O" is selected for Mounted motor specification, the motor specification code for the 1st and 2nd axes is "M" or "P".

Ⓒ Combination direction

P1	P2
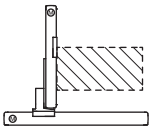	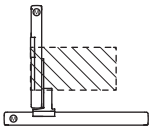

Ⓕ Mounted motor specification

Manufacturer	750 W
Mitsubishi Electric Corporation	M
Delta Electronics Co., Ltd.	M
Sanyo Denki Co., Ltd.	-
YASKAWA Electric Corporation	Y
Keyence Corporation	Y
Panasonic Corporation	P
OMRON Corporation	O

*Refer to page 164 for the recommended motor model No.

Ⓒ Combination direction and motor mounting direction

Combined axes	Combination	Combination direction	Motor mounting direction and motor capacity			
			1st axis		2nd axis	
			Model	750 W	Model	750 W
ETS-880	P	1	ETS-22	B	ETS-22	B (with brake)
		2		B		B (with brake)

*B: Built-in mount

ⒹⒺ stroke length

Combined axes	Combination	1st axis			2nd axis		
		Model	Screw lead (mm)	Stroke (mm)	Model	Screw lead (mm)	Stroke (mm)
ETS-880	P	ETS-22	25	100 to 1500	ETS-22	5	50 to 950

Grease nipple

Combined axes	Combination	Combination direction	1st axis		2nd axis	
			Model	Grease nipple position	Model	Grease nipple position
ETS-880	P	1	ETS-22	L	ETS-22	L
		2		R		L

*R: Right side L: Left side

Dimensions

● ETS-880P1

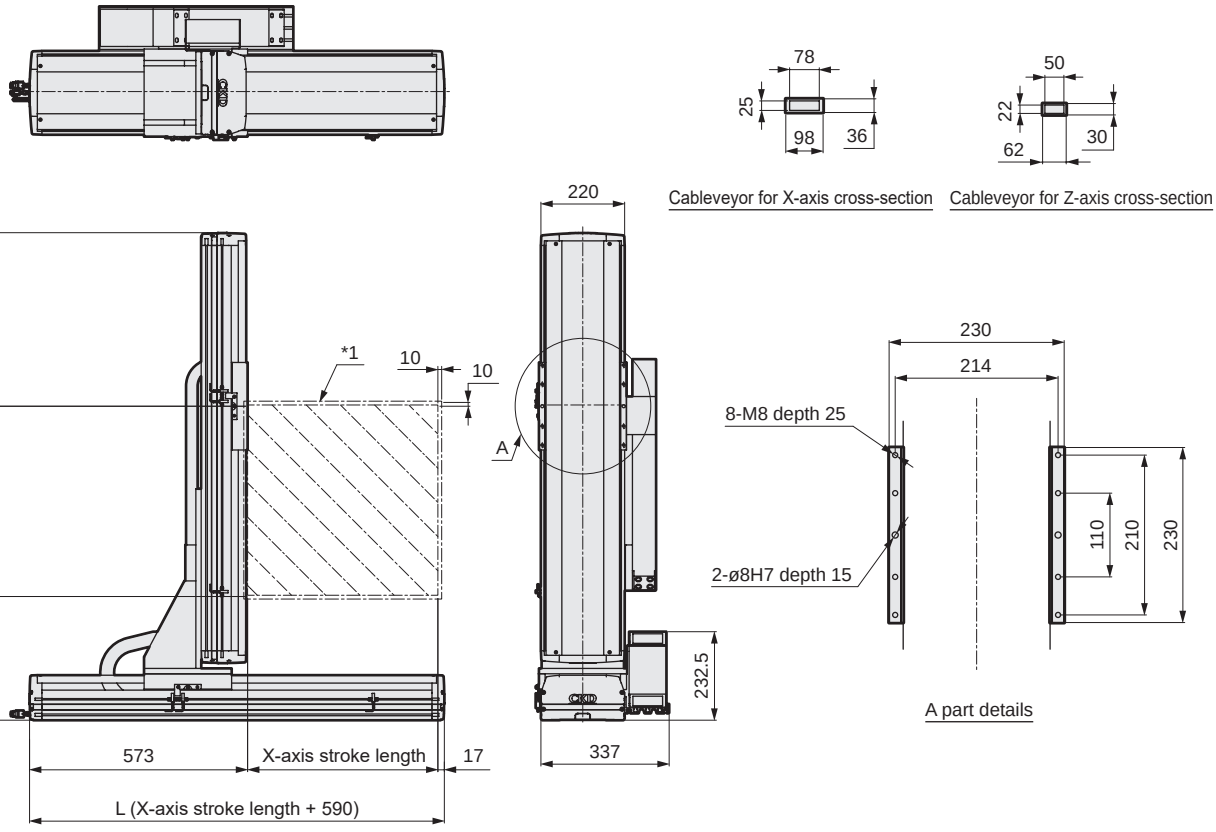

*This figure shows the dimensions when combined.

*1: Stops within the moving range and this range when returning to origin.

*2: The length of the Z-axis changes depending on the manufacturer of the motor installed.

X-axis stroke (mm)	100	150	200	250	300	350	400	450	500	550	600	650	700	750	800	850	900	950	1000	1050	1100	1150	1200	1250	1300	1350	1400	1450	1500
L	690	740	790	840	890	940	990	1040	1090	1140	1190	1240	1290	1340	1390	1440	1490	1540	1590	1640	1690	1740	1790	1840	1890	1940	1990	2040	2090
A	100	150	200	50	100	150	200	50	100	150	200	50	100	150	200	50	100	150	200	50	100	150	200	50	100	150	200	50	100
M	1	1	1	2	2	2	2	3	3	3	3	4	4	4	4	5	5	5	5	6	6	6	6	7	7	7	7	8	8
N	6	6	6	8	8	8	8	10	10	10	10	12	12	12	12	14	14	14	14	16	16	16	16	18	18	18	18	20	20
P	300	350	400	450	500	550	600	650	700	750	800	850	900	950	1000	1050	1100	1150	1200	1250	1300	1350	1400	1450	1500	1550	1600	1650	1700
Max. working speed (mm/s)	1250																	1125		1000		875		750		625		500	

Z-axis stroke (mm)	50	100	150	200	250	300	350	400	450	500	550	600	650	700	750	800	850	900	950
H	831	881	931	981	1031	1081	1131	1181	1231	1281	1331	1381	1431	1481	1531	1581	1631	1681	1731
Max. working speed (mm/s)	250																		
Max. load capacity (kg)	35																		

List of attachments

[Motor mounting parts]

Model No.	Mounted motor specifications	Motor mounting direction	Mounting parts	Shipment method	Motor capacity	Motor mounting bolt	
ETS-22	M	B	Coupling	Assembled at shipment	750 W	M6	4
	Y					M6	4
	P					M5	4

*When "O" is selected for Mounted motor specification, the motor specification code for the 1st and 2nd axes is "M" or "P".

[Origin sensor/Limit sensor]

Manufacturer	Model	Quantity
OMRON Corporation	EE-SX672	6

*Refer to page 156 for sensor specifications.

[Other attachments for axis combinations]

Cableveyor, axis combination bracket

Dimensions

● ETS-880P2

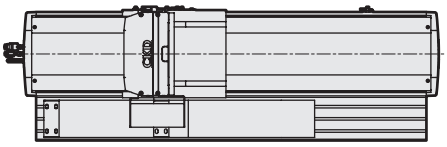

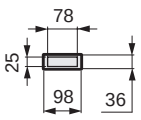

Cableveyor for X-axis cross-section

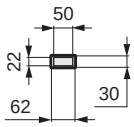

Cableveyor for Z-axis cross-section

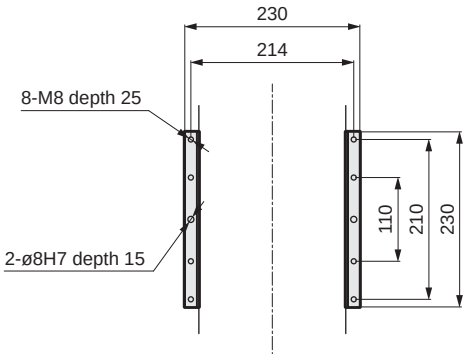

A part details

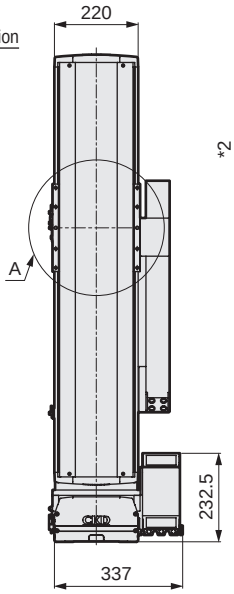

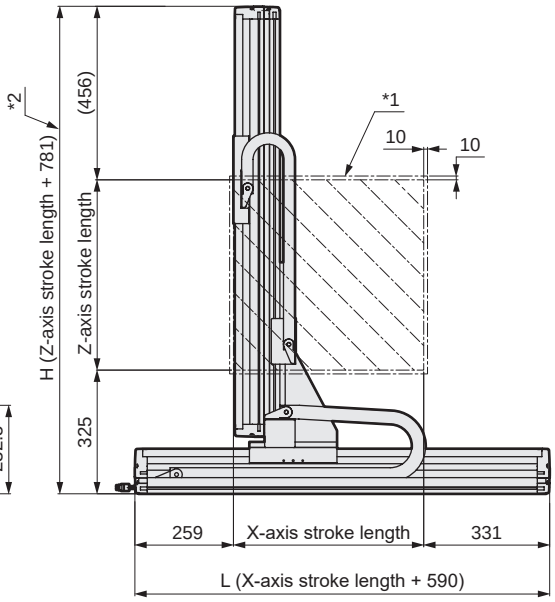

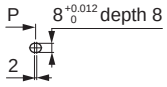

D part details

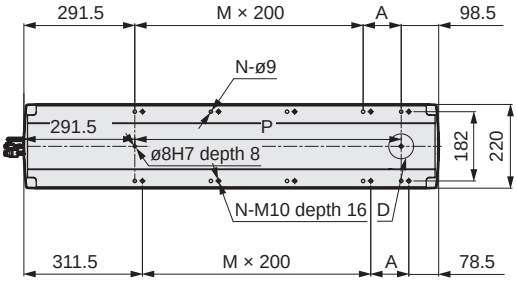

*This figure shows the dimensions when combined.

*1: Stops within the moving range and this range when returning to origin.

*2: The length of the Z-axis changes depending on the manufacturer of the motor installed.

X-axis stroke (mm)	100	150	200	250	300	350	400	450	500	550	600	650	700	750	800	850	900	950	1000	1050	1100	1150	1200	1250	1300	1350	1400	1450	1500
L	690	740	790	840	890	940	990	1040	1090	1140	1190	1240	1290	1340	1390	1440	1490	1540	1590	1640	1690	1740	1790	1840	1890	1940	1990	2040	2090
A	100	150	200	50	100	150	200	50	100	150	200	50	100	150	200	50	100	150	200	50	100	150	200	50	100	150	200	50	100
M	1	1	1	2	2	2	2	3	3	3	3	4	4	4	4	5	5	5	5	6	6	6	6	7	7	7	7	8	8
N	6	6	6	8	8	8	8	10	10	10	10	12	12	12	12	14	14	14	14	16	16	16	16	18	18	18	18	20	20
P	300	350	400	450	500	550	600	650	700	750	800	850	900	950	1000	1050	1100	1150	1200	1250	1300	1350	1400	1450	1500	1550	1600	1650	1700
Max. working speed (mm/s)	1250																	1125		1000		875		750		625		500	

Z-axis stroke (mm)	50	100	150	200	250	300	350	400	450	500	550	600	650	700	750	800	850	900	950
H	831	881	931	981	1031	1081	1131	1181	1231	1281	1331	1381	1431	1481	1531	1581	1631	1681	1731
Max. working speed (mm/s)	250																		
Max. load capacity (kg)	35																		

List of attachments

[Motor mounting parts]

Model No.	Mounted motor specifications	Motor mounting direction	Mounting parts	Shipment method	Motor capacity	Motor mounting bolt	
ETS-22	M	B	Coupling	Assembled at shipment	750 W	M6	4
	Y					M6	4
	P					M5	4

*When "O" is selected for Mounted motor specification, the motor specification code for the 1st and 2nd axes is "M" or "P".

[Origin sensor/Limit sensor]

Manufacturer	Model	Quantity
OMRON Corporation	EE-SX672	6

*Refer to page 156 for sensor specifications.

[Other attachments for axis combinations]

Cableveyor, axis combination bracket

MEMO



Electric actuator Ball screw drive Slider

ETS Multi-Axis Series

- Servo motor capacity: 100 W/200 W/400 W
- 2-axis combination Y-Z axes (F type)

RoHS

How to order

ETS - 530 F 1 - 040 030 - M B W

(A) (B) (C) (D) (E) (F) (G) (H)

(A) Combined axes

530	ETS-13 × ETS-10
640	ETS-14 × ETS-12
760	ETS-17 × ETS-14

(B) Combination

P	Y-Z axes

(C) Combination direction

1 / 3	Confirm the table below.

(D) 1st axis stroke

010 to 125	100 mm to (50 mm pitch) 1250 mm

(E) 2nd axis stroke

005 to 055	50 mm to (50 mm pitch) 550 mm

(F) Mounted motor specification *3

M	Select the mounted motor specification from the table below.
Y	
P	
O	

(G) Brake *1

B	Yes

(H) Origin/Limit sensor (3 pcs × 2 axes) *2

N	None
W	Yes

*1: The brake targets the 2nd axis.
*2: The user can adjust the sensor position. (Included at shipment)
*3: When "O" is selected for Mounted motor specification, the motor specification code for the 1st and 2nd axes is "M" or "P".

(F) Mounted motor specification

Manufacturer	100 W	200 W	400 W
Mitsubishi Electric Corporation	M	M	M
Delta Electronics Co., Ltd.	M	M	M
Sanyo Denki Co., Ltd.	M	M	M
YASKAWA Electric Corporation	Y	Y	Y
Keyence Corporation	Y	Y	Y
Panasonic Corporation	P	P	P
OMRON Corporation	O	O	O

*Refer to page 164 for the recommended motor model No.

(C) Combination direction

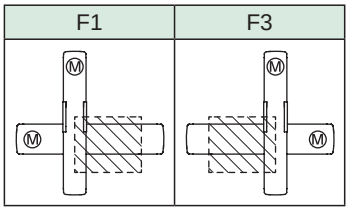

Axis combination specifications

Ⓒ Combination direction and motor mounting direction

Combined axes	Combination	Combination direction	Motor mounting direction and motor capacity							
			1st axis				2nd axis *1			
			Model	100 W	200 W	400 W	Model	100 W	200 W	400 W
ETS-530	F	1.3	ETS-13	-	B	-	ETS-10	B (with brake)	-	-
ETS-640	F	1.3	ETS-14	-	B	-	ETS-12	-	E (with brake)	-
ETS-760	F	1.3	ETS-17	-	-	B	ETS-14	-	-	B (with brake)

*E: Straight mount B: Built-in mount
*Contact CKD when using an OMRON motor.

ⒹⒺ stroke length

Combined axes	Combination	1st axis			2nd axis		
		Model	Screw lead (mm)	Stroke (mm)	Model	Screw lead (mm)	Stroke (mm)
ETS-530	F	ETS-13	20	100 to 1050	ETS-10	10	50 to 350
ETS-640		ETS-14	20	100 to 1050	ETS-12	10	50 to 350
ETS-760		ETS-17	25	100 to 1250	ETS-14	10	50 to 550

Grease nipple

Combined axes	Combination	Combination direction	1st axis		2nd axis	
			Model	Grease nipple position	Model	Grease nipple position
ETS-530	F	1	ETS-13	R	ETS-10	R
		3		L		L
ETS-640	F	1	ETS-14	R	ETS-12	R
		3		L		L
ETS-760	F	1	ETS-17	R	ETS-14	R
		3		L		L



Electric actuator Ball screw drive Slider

ETS Multi-Axis Series

- Servo motor capacity: 200 W/100 W
- 2-axis combination Y-Z axes (F type)

RoHS

How to order

ETS - 530 F 1 - 040 030 - M B W

Ⓐ Combined axes

530	ETS-13 × ETS-10

Ⓑ Combination

F	Y-Z axes

Ⓒ Combination direction

1, 3	Confirm the table below.

Ⓓ 1st axis stroke

010 to 105	100 mm to 1050 mm (50 mm pitch)

Ⓔ 2nd axis stroke

005 to 035	50 mm to 350 mm (50 mm pitch)

Ⓕ Mounted motor specification *3

M, Y, P, O	Select the mounted motor specification from the table below.

Ⓖ Brake *1

B	Yes

Ⓗ Origin/Limit sensor (3 pcs × 2 axes) *2

N	None
W	Yes

*1: The brake targets the 2nd axis.
*2: The user can adjust the sensor position. (Included at shipment)
*3: When "O" is selected for Mounted motor specification, the motor specification code for the 1st and 2nd axes is "M" or "P".

Ⓒ Combination direction

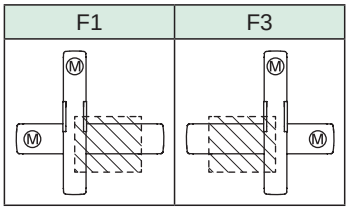

Ⓕ Mounted motor specification

Manufacturer	100 W	200 W
Mitsubishi Electric Corporation	M	M
Delta Electronics Co., Ltd.	M	M
Sanyo Denki Co., Ltd.	M	M
YASKAWA Electric Corporation	Y	Y
Keyence Corporation	Y	Y
Panasonic Corporation	P	P
OMRON Corporation	O	O

*Refer to page 164 for the recommended motor model No.

Ⓒ Combination direction and motor mounting direction

Combined axes	Combination	Combination direction	Motor mounting direction and motor capacity			
			1st axis		2nd axis	
			Model	200 W	Model	100 W
ETS-530	F	1	ETS-13	B	ETS-10	B (with brake)
		3		B		B (with brake)

*B: Built-in mount

ⒹⒺ stroke length

Combined axes	Combination	1st axis			2nd axis		
		Model	Screw lead (mm)	Stroke (mm)	Model	Screw lead (mm)	Stroke (mm)
ETS-530	F	ETS-13	20	100 to 1050	ETS-10	10	50 to 350

Grease nipple

Combined axes	Combination	Combination direction	1st axis		2nd axis	
			Model	Grease nipple position	Model	Grease nipple position
ETS-530	F	1	ETS-13	R	ETS-10	R
		3		L		L

*R: Right side L: Left side

Dimensions

● ETS-530F1

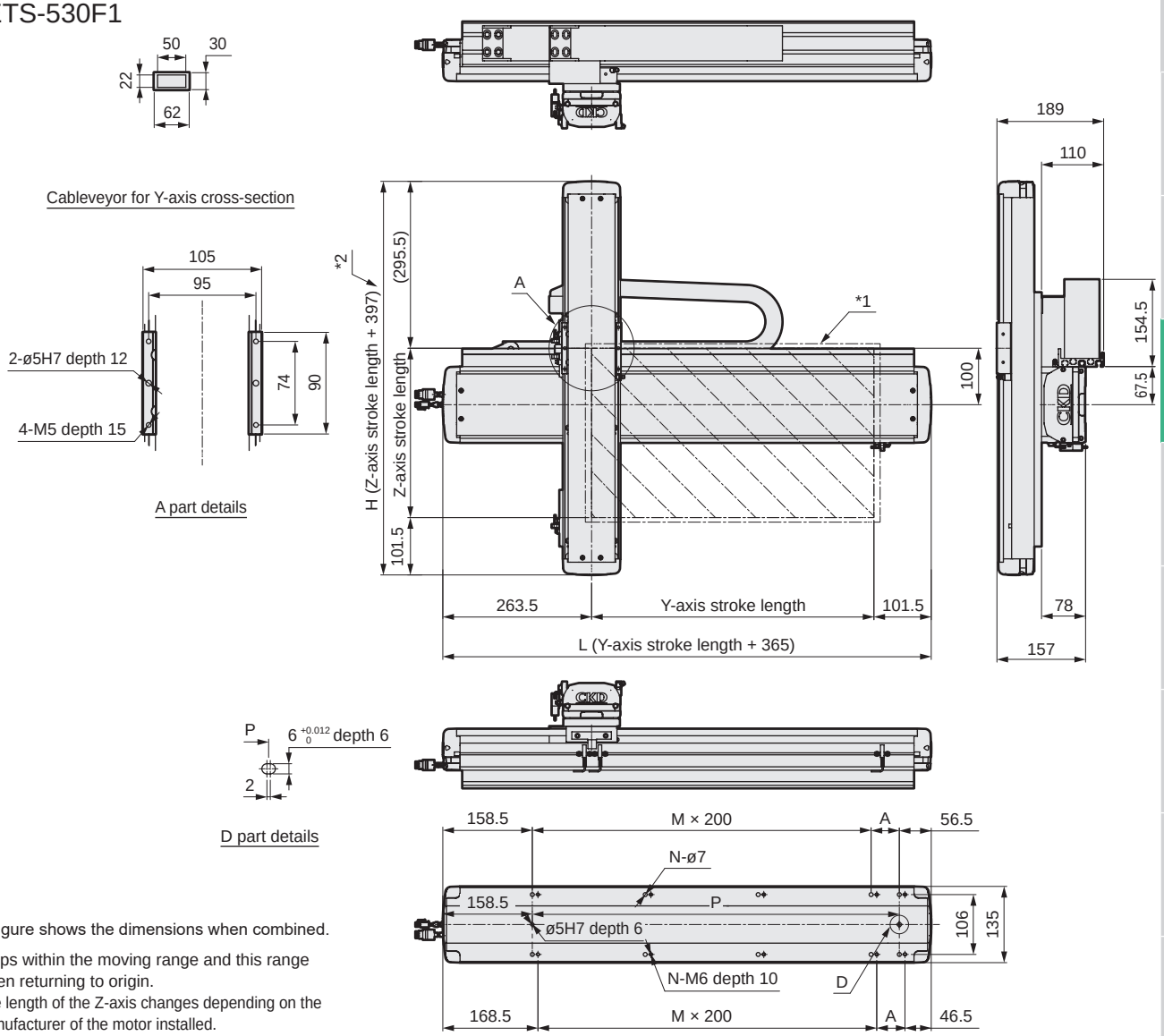

*This figure shows the dimensions when combined.

*1: Stops within the moving range and this range when returning to origin.

*2: The length of the Z-axis changes depending on the manufacturer of the motor installed.

Y-axis stroke (mm)	100	150	200	250	300	350	400	450	500	550	600	650	700	750	800	850	900	950	1000	1050
L	465	515	565	615	665	715	765	815	865	915	965	1015	1065	1115	1165	1215	1265	1315	1365	1415
A	50	100	150	200	50	100	150	200	50	100	150	200	50	100	150	200	50	100	150	200
M	1	1	1	1	2	2	2	2	3	3	3	3	4	4	4	4	5	5	5	5
N	6	6	6	6	8	8	8	8	10	10	10	10	12	12	12	12	14	14	14	14
P	250	300	350	400	450	500	550	600	650	700	750	800	850	900	950	1000	1050	1100	1150	1200
Max. working speed (mm/s)	1000														900	800	700	600	500	400

Z-axis stroke (mm)	50	100	150	200	250	300	350
H	447	497	547	597	647	697	747
Max. working speed (mm/s)	500						
Max. load capacity (kg)	8						

List of attachments

[Motor mounting parts]

Model No.	Mounted motor specifications	Motor mounting direction	Mounting parts	Shipment method	Motor capacity	Motor mounting bolt	
ETS-13	M	B	Coupling	Assembled at shipment	200 W	M5/M4	4/2
	Y					M5/M5	4/2
ETS-10	P				100 W	M4/M3	4

*When "O" is selected for Mounted motor specification, the motor specification code for the 1st and 2nd axes is "M" or "P".

[Origin sensor/Limit sensor]

Manufacturer	Model	Quantity
OMRON Corporation	EE-SX672	6

*Refer to page 156 for sensor specifications.

[Other attachments for axis combinations]

Cableveyor, axis combination bracket

Dimensions

● ETS-530F3

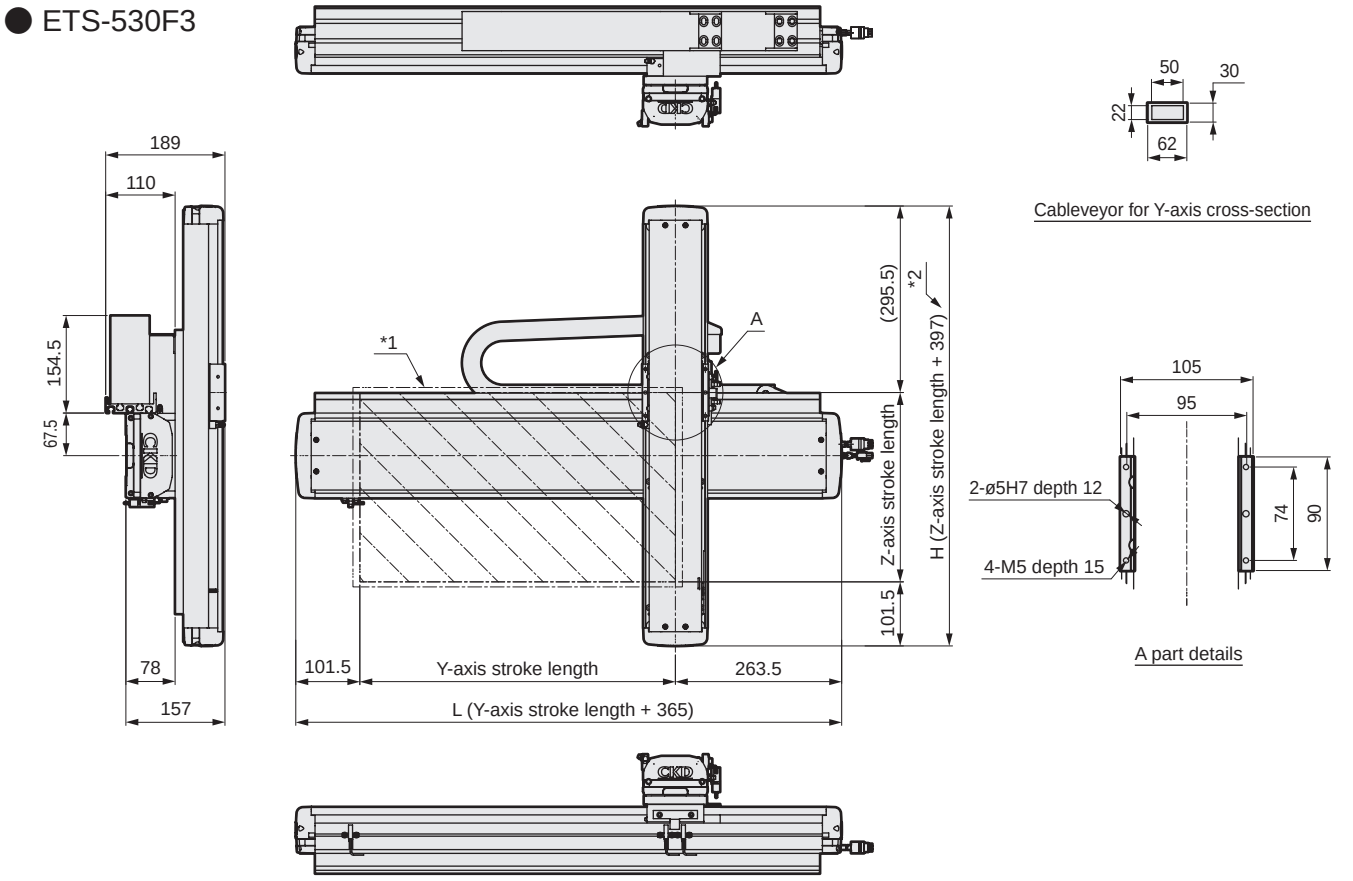

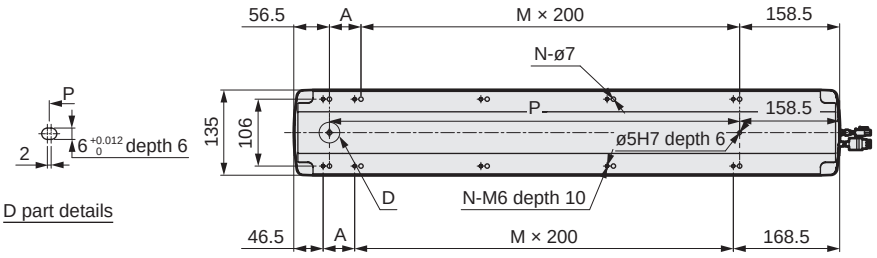

*This figure shows the dimensions when combined.

*1: Stops within the moving range and this range when returning to origin.

*2: The length of the Z-axis changes depending on the manufacturer of the motor installed.

Y-axis stroke (mm)	100	150	200	250	300	350	400	450	500	550	600	650	700	750	800	850	900	950	1000	1050
L	465	515	565	615	665	715	765	815	865	915	965	1015	1065	1115	1165	1215	1265	1315	1365	1415
A	50	100	150	200	50	100	150	200	50	100	150	200	50	100	150	200	50	100	150	200
M	1	1	1	1	2	2	2	2	3	3	3	3	4	4	4	4	5	5	5	5
N	6	6	6	6	8	8	8	8	10	10	10	10	12	12	12	12	14	14	14	14
P	250	300	350	400	450	500	550	600	650	700	750	800	850	900	950	1000	1050	1100	1150	1200
Max. working speed (mm/s)	1000														900	800	700	600	500	400

Z-axis stroke (mm)	50	100	150	200	250	300	350
H	447	497	547	597	647	697	747
Max. working speed (mm/s)	500						
Max. load capacity (kg)	8						

List of attachments

[Motor mounting parts]

Model No.	Mounted motor specifications	Motor mounting direction	Mounting parts	Shipment method	Motor capacity	Motor mounting bolt	
ETS-13	M	B	Coupling	Assembled at shipment	200 W	M5/M4	4/2
	Y					M5/M5	4/2
ETS-10	P				100 W	M4/M3	4

*When "O" is selected for Mounted motor specification, the motor specification code for the 1st and 2nd axes is "M" or "P".

[Origin sensor/Limit sensor]

Manufacturer	Model	Quantity
OMRON Corporation	EE-SX672	6

*Refer to page 156 for sensor specifications.

[Other attachments for axis combinations]

Cableveyor, axis combination bracket

MEMO



Electric actuator Ball screw drive Slider

ETS Multi-Axis Series

- Servo motor capacity: 200 W
- 2-axis combination Y-Z axes (F type)

RoHS

How to order

ETS - 640 F 1 - 040 030 - M B W

Ⓐ Ⓑ Ⓒ Ⓓ Ⓔ Ⓕ Ⓖ Ⓗ

Ⓐ Combined axes

640	ETS-14 × ETS-12

Ⓑ Combination

F	Y-Z axes

Ⓒ Combination direction

1, 3	Confirm the table below.

Ⓓ 1st axis stroke

010 to 105	100 mm to (50 mm pitch) 1050 mm

Ⓔ 2nd axis stroke

005 to 035	50 mm to (50 mm pitch) 350 mm

Ⓕ Mounted motor specification *3

M	Select the mounted motor specification from the table below.
Y	
P	
O	

Ⓖ Brake *1

B	Yes

Ⓗ Origin/Limit sensor (3 pcs × 2 axes) *2

N	None
W	Yes

*1: The brake targets the 2nd axis.
*2: The user can adjust the sensor position. (Included at shipment)
*3: When "O" is selected for Mounted motor specification, the motor specification code for the 1st and 2nd axes is "M" or "P".

Ⓕ Mounted motor specification

Manufacturer	200 W
Mitsubishi Electric Corporation	M
Delta Electronics Co., Ltd.	M
Sanyo Denki Co., Ltd.	M
YASKAWA Electric Corporation	Y
Keyence Corporation	Y
Panasonic Corporation	P
OMRON Corporation	O

*Refer to page 164 for the recommended motor model No.

Ⓒ Combination direction

F1	F3
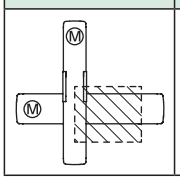	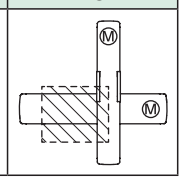

Ⓒ Combination direction and motor mounting direction

Combined axes	Combination	Combination direction	Motor mounting direction and motor capacity			
			1st axis		2nd axis	
			Model	200 W	Model	200 W
ETS-640	F	1	ETS-14	B	ETS-12	E (with brake)
		3		B		E (with brake)

*B: Built-in mount

ⒹⒺ stroke length

Combined axes	Combination	1st axis			2nd axis		
		Model	Screw lead (mm)	Stroke (mm)	Model	Screw lead (mm)	Stroke (mm)
ETS-640	F	ETS-14	20	100 to 1050	ETS-12	10	50 to 350

Grease nipple

Combined axes	Combination	Combination direction	1st axis		2nd axis	
			Model	Grease nipple position	Model	Grease nipple position
ETS-640	F	1	ETS-14	R	ETS-12	R
		3		L		L

*R: Right side L: Left side

Dimensions

● ETS-640F1

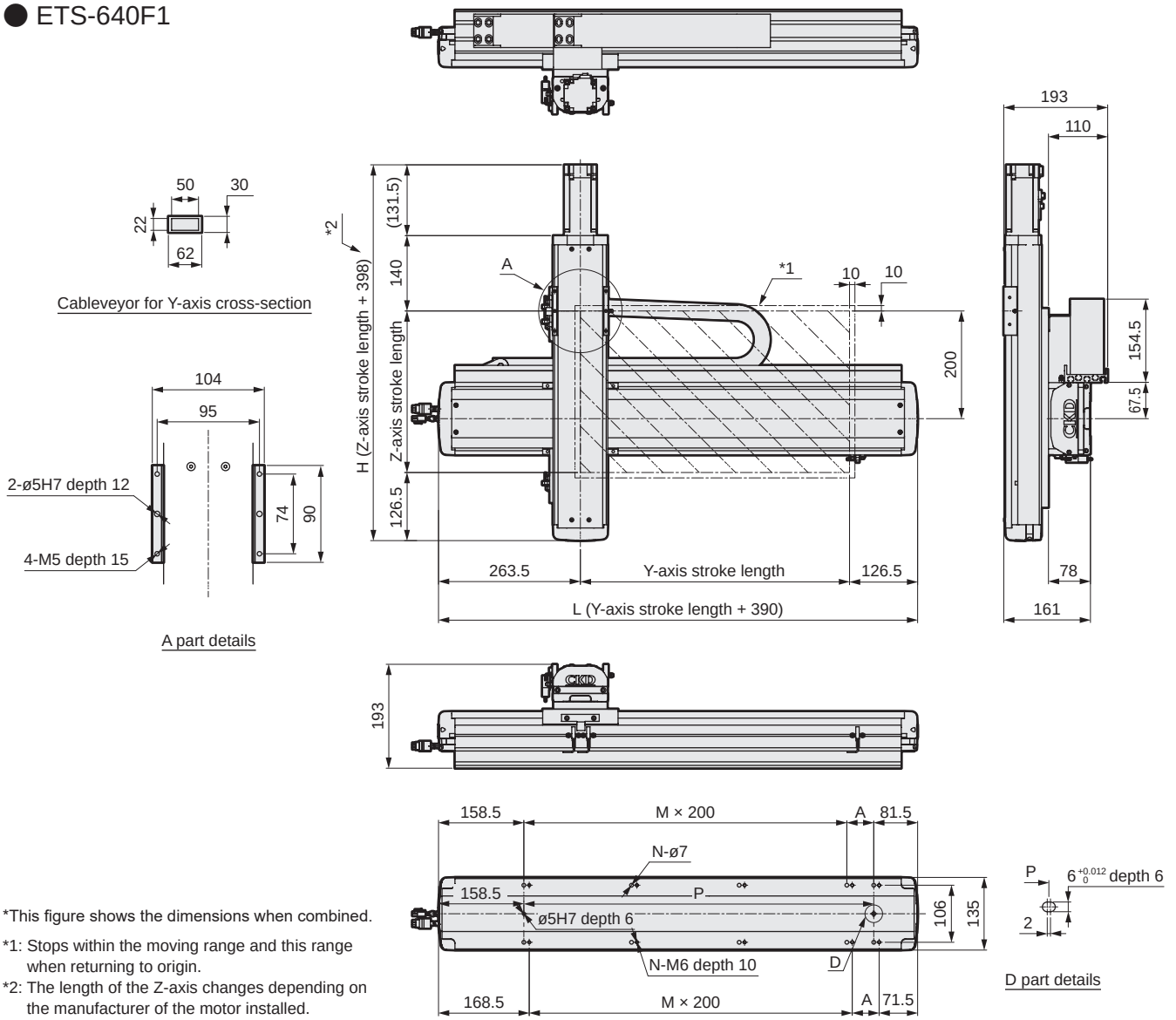

*This figure shows the dimensions when combined.

*1: Stops within the moving range and this range when returning to origin.

*2: The length of the Z-axis changes depending on the manufacturer of the motor installed.

Y-axis stroke (mm)	100	150	200	250	300	350	400	450	500	550	600	650	700	750	800	850	900	950	1000	1050
L	490	540	590	640	690	740	790	840	890	940	990	1040	1090	1140	1190	1240	1290	1340	1390	1440
A	50	100	150	200	50	100	150	200	50	100	150	200	50	100	150	200	50	100	150	200
M	1	1	1	1	2	2	2	2	3	3	3	3	4	4	4	4	5	5	5	5
N	6	6	6	6	8	8	8	8	10	10	10	10	12	12	12	12	14	14	14	14
P	250	300	350	400	450	500	550	600	650	700	750	800	850	900	950	1000	1050	1100	1150	1200
Max. working speed (mm/s)	1000														900	800	700	600	500	400

Z-axis stroke (mm)	50	100	150	200	250	300	350
H	448	498	548	598	648	698	748
Max. working speed (mm/s)	500						
Max. load capacity (kg)	15						

List of attachments

[Motor mounting parts]

Model No.	Mounted motor specifications	Motor mounting direction	Mounting parts	Shipment method	Motor capacity	Motor mounting bolt	
ETS-14	M	B	Coupling	Assembled at shipment	200 W	M5	4
	Y					M5	4
ETS-12	P	E				M4	4

*When "O" is selected for Mounted motor specification, the motor specification code for the 1st and 2nd axes is "M" or "P".

[Origin sensor/Limit sensor]

Manufacturer	Model	Quantity
OMRON Corporation	EE-SX672	6

*Refer to page 156 for sensor specifications.

[Other attachments for axis combinations]

Cableveyor, axis combination bracket

Dimensions

● ETS-640F3

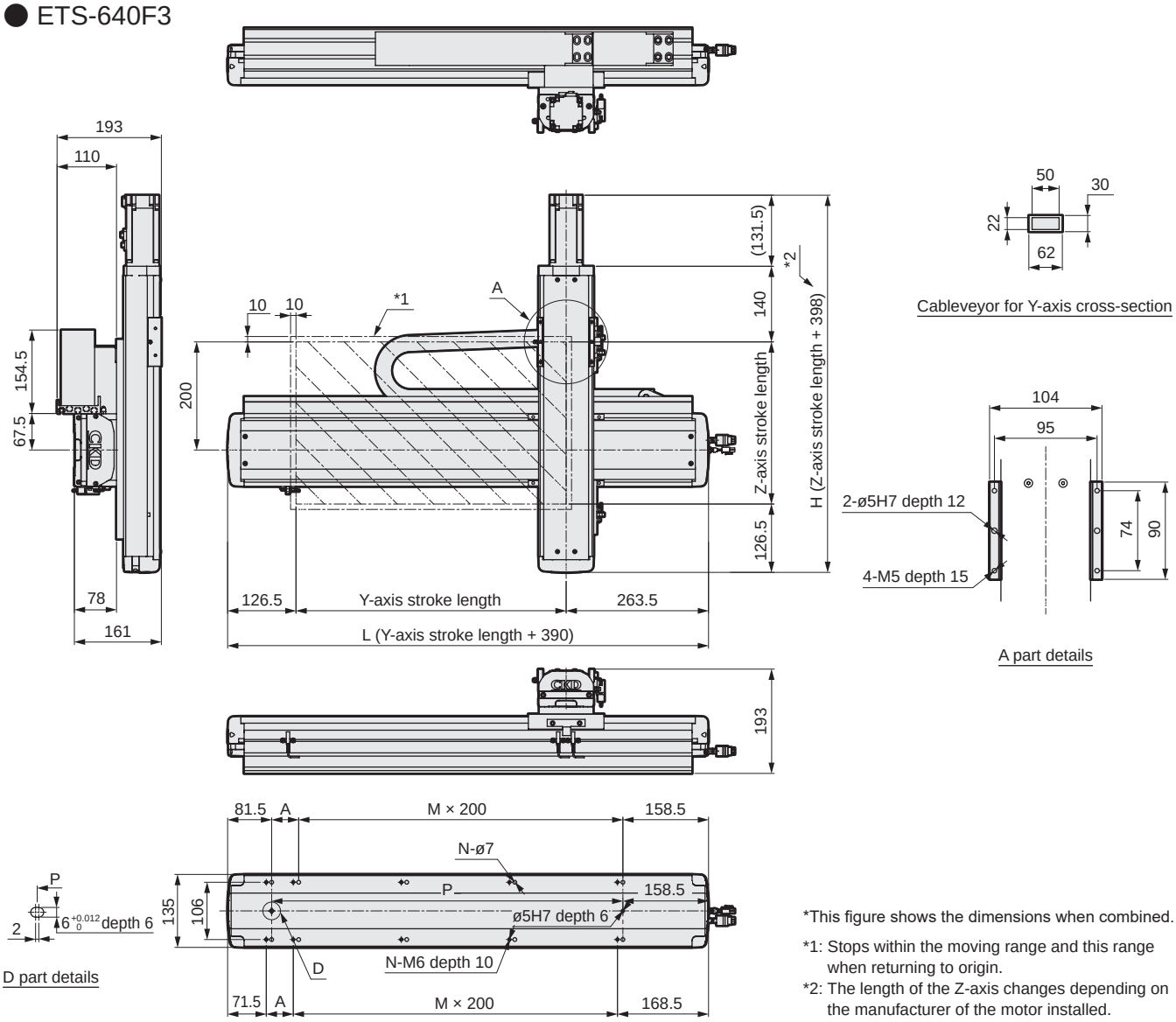

*This figure shows the dimensions when combined.

*1: Stops within the moving range and this range when returning to origin.

*2: The length of the Z-axis changes depending on the manufacturer of the motor installed.

Y-axis stroke (mm)	100	150	200	250	300	350	400	450	500	550	600	650	700	750	800	850	900	950	1000	1050
L	490	540	590	640	690	740	790	840	890	940	990	1040	1090	1140	1190	1240	1290	1340	1390	1440
A	50	100	150	200	50	100	150	200	50	100	150	200	50	100	150	200	50	100	150	200
M	1	1	1	1	2	2	2	2	3	3	3	3	4	4	4	4	5	5	5	5
N	6	6	6	6	8	8	8	8	10	10	10	10	12	12	12	12	14	14	14	14
P	250	300	350	400	450	500	550	600	650	700	750	800	850	900	950	1000	1050	1100	1150	1200
Max. working speed (mm/s)	1000														900	800	700	600	500	400

Z-axis stroke (mm)	50	100	150	200	250	300	350
H	448	498	548	598	648	698	748
Max. working speed (mm/s)	500						
Max. load capacity (kg)	15						

List of attachments

[Motor mounting parts]

Model No.	Mounted motor specifications	Motor mounting direction	Mounting parts	Shipment method	Motor capacity	Motor mounting bolt	
ETS-14	M	B	Coupling	Assembled at shipment	200 W	M5	4
	Y					M5	4
ETS-12	P	E				M4	4

*When "O" is selected for Mounted motor specification, the motor specification code for the 1st and 2nd axes is "M" or "P".

[Origin sensor/Limit sensor]

Manufacturer	Model	Quantity
OMRON Corporation	EE-SX672	6

*Refer to page 156 for sensor specifications.

[Other attachments for axis combinations]

Cableveyor, axis combination bracket

MEMO



Electric actuator Ball screw drive Slider

ETS Multi-Axis Series

- Servo motor capacity: 400 W
- 2-axis combination Y-Z axes (F type)

RoHS

How to order

ETS - 760 F 1 - 040 030 - M B W

(A) Combined axes

760	ETS-17 × ETS-14

(B) Combination

F	Y-Z axes

(C) Combination direction

1, 3	Confirm the table below.

(D) 1st axis stroke

010 to 125	100 mm to (50 mm pitch) 1250 mm

(E) 2nd axis stroke

005 to 055	50 mm to (50 mm pitch) 550 mm

(F) Mounted motor specification *3

M, Y, P, O	Select the mounted motor specification from the table below.

(G) Brake *1

B	Yes

(H) Origin/Limit sensor (3 pcs × 2 axes) *2

N	None
W	Yes

*1: The brake targets the 2nd axis.
*2: The user can adjust the sensor position. (Included at shipment)
*3: When "O" is selected for Mounted motor specification, the motor specification code for the 1st and 2nd axes is "M" or "P".

(F) Mounted motor specification

Manufacturer	400 W
Mitsubishi Electric Corporation	M
Delta Electronics Co., Ltd.	M
Sanyo Denki Co., Ltd.	M
YASKAWA Electric Corporation	Y
Keyence Corporation	Y
Panasonic Corporation	P
OMRON Corporation	O

*Refer to page 164 for the recommended motor model No.

(C) Combination direction

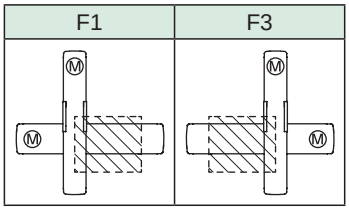

(C) Combination direction and motor mounting direction

Combined axes	Combination	Combination direction	Motor mounting direction and motor capacity			
			1st axis		2nd axis	
			Model	400 W	Model	400 W
ETS-760	F	1	ETS-17	B	ETS-14	B (with brake)
		3		B		B (with brake)

*B: Built-in mount

(D)(E) stroke length

Combined axes	Combination	1st axis			2nd axis		
		Model	Screw lead (mm)	Stroke (mm)	Model	Screw lead (mm)	Stroke (mm)
ETS-760	F	ETS-17	20	100 to 1250	ETS-14	10	50 to 550

Grease nipple

Combined axes	Combination	Combination direction	1st axis		2nd axis	
			Model	Grease nipple position	Model	Grease nipple position
ETS-760	F	1	ETS-17	R	ETS-14	R
		3		L		L

*R: Right side L: Left side

Dimensions

● ETS-760F1

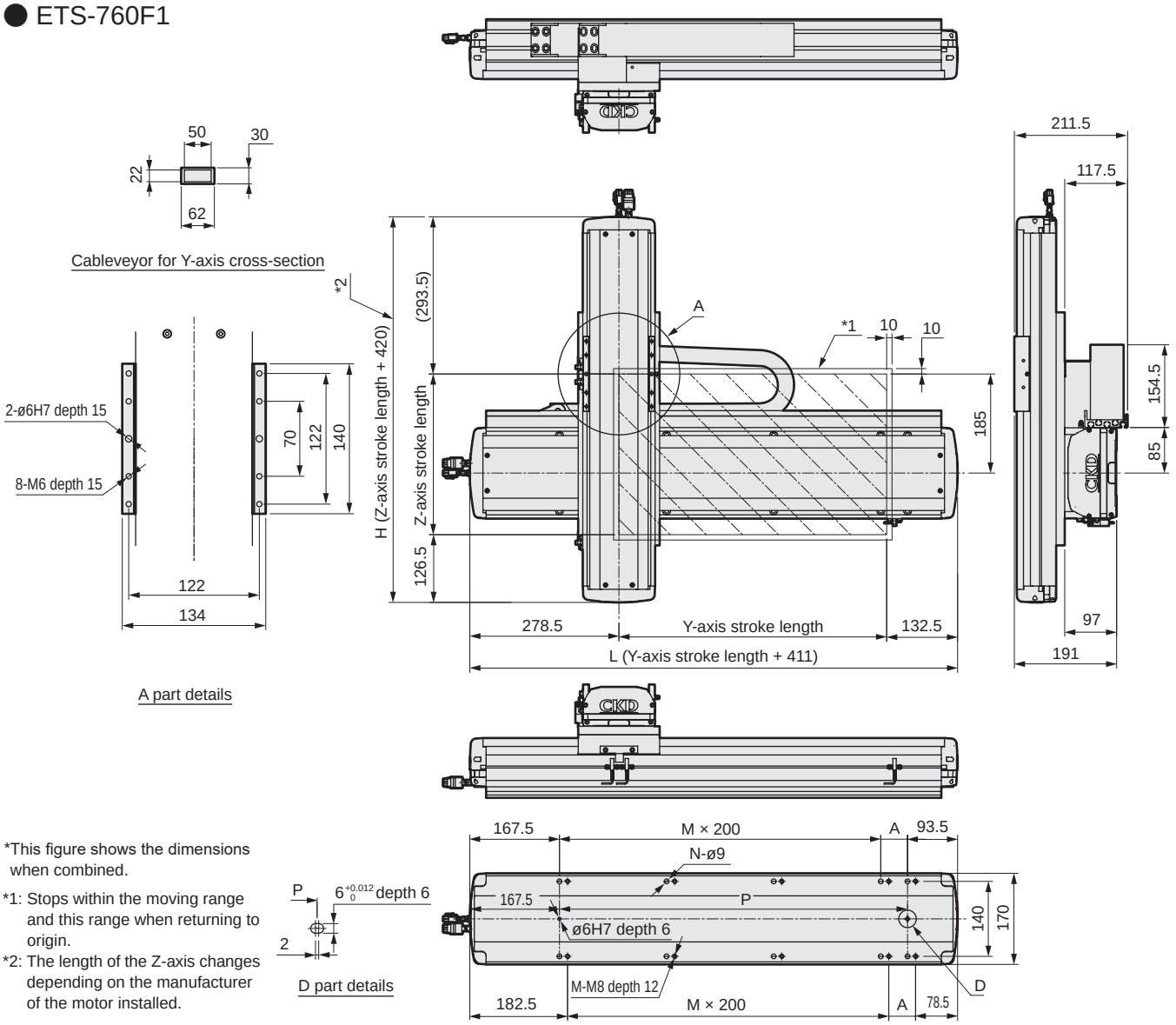

*This figure shows the dimensions when combined.

*1: Stops within the moving range and this range when returning to origin.

*2: The length of the Z-axis changes depending on the manufacturer of the motor installed.

Y-axis stroke (mm)	100	150	200	250	300	350	400	450	500	550	600	650	700	750	800	850	900	950	1000	1050	1100	1150	1200	1250
L	511	561	611	661	711	761	811	861	911	961	1011	1061	1111	1161	1211	1261	1311	1361	1411	1461	1511	1561	1611	1661
A	50	100	150	200	50	100	150	200	50	100	150	200	50	100	150	200	50	100	150	200	50	100	150	200
M	1	1	1	1	2	2	2	2	3	3	3	3	4	4	4	4	5	5	5	5	6	6	6	6
N	6	6	6	6	8	8	8	8	10	10	10	10	12	12	12	12	14	14	14	14	16	16	16	16
P	250	300	350	400	450	500	550	600	650	700	750	800	850	900	950	1000	1050	1100	1150	1200	1250	1300	1350	1400
Max. working speed (mm/s)	1000																900		800		700		600	

Z-axis stroke (mm)	50	100	150	200	250	300	350	400	450	500	550
H	470	520	570	620	670	720	770	820	870	920	970
Max. working speed (mm/s)	500										
Max. load capacity (kg)	22										

List of attachments

[Motor mounting parts]

Model No.	Mounted motor specifications	Motor mounting direction	Mounting parts	Shipment method	Motor capacity	Motor mounting bolt	
ETS-17	M	B	Coupling	Assembled at shipment	400 W	M5	4
	Y					M5	4
ETS-14	P					M4	4

*When "O" is selected for Mounted motor specification, the motor specification code for the 1st and 2nd axes is "M" or "P".

[Origin sensor/Limit sensor]

Manufacturer	Model	Quantity
OMRON Corporation	EE-SX672	6

*Refer to page 156 for sensor specifications.

[Other attachments for axis combinations]

Cableveyor, axis combination bracket

Dimensions

● ETS-760F3

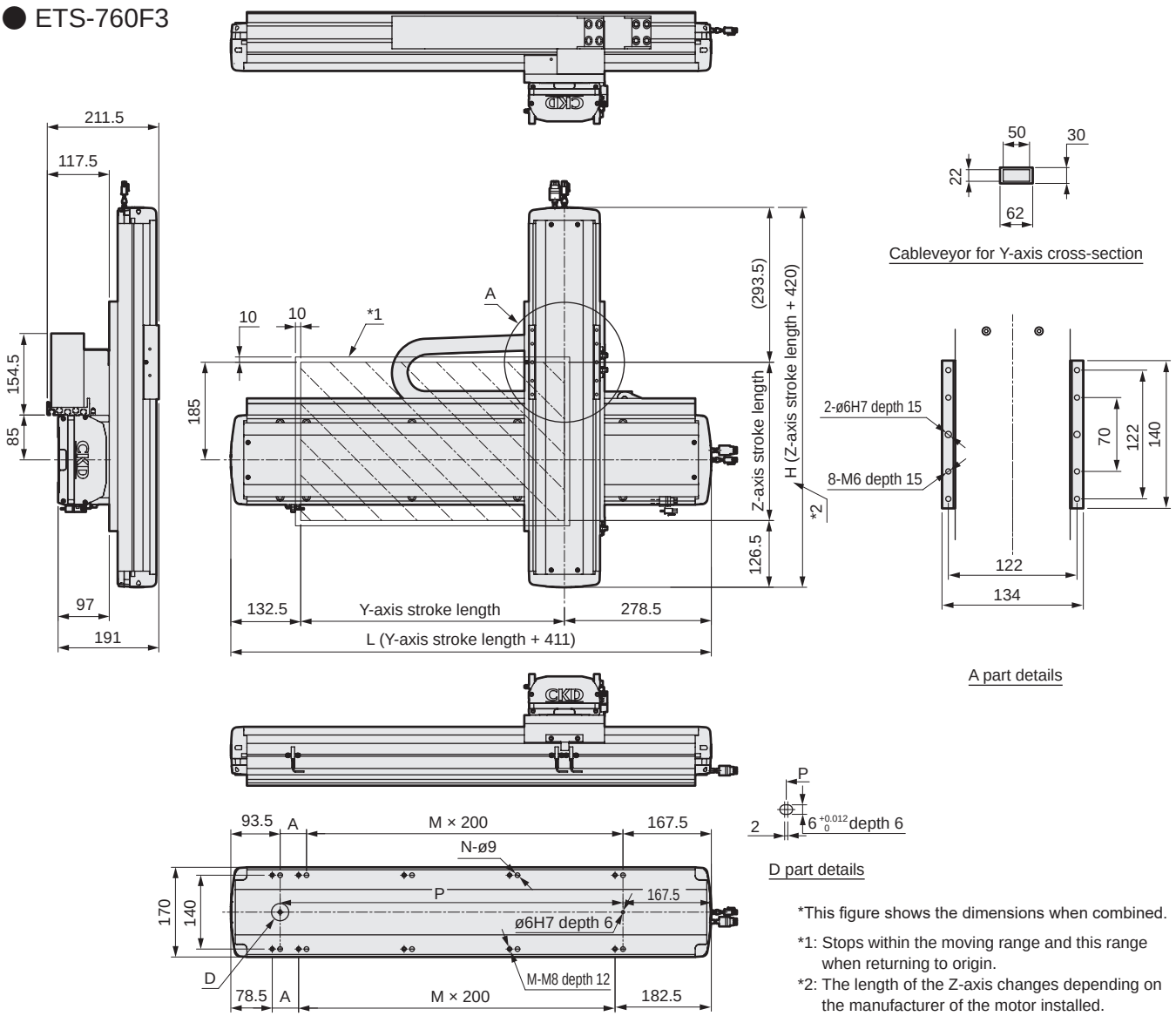

*This figure shows the dimensions when combined.

*1: Stops within the moving range and this range when returning to origin.

*2: The length of the Z-axis changes depending on the manufacturer of the motor installed.

Y-axis stroke (mm)	100	150	200	250	300	350	400	450	500	550	600	650	700	750	800	850	900	950	1000	1050	1100	1150	1200	1250
L	511	561	611	661	711	761	811	861	911	961	1011	1061	1111	1161	1211	1261	1311	1361	1411	1461	1511	1561	1611	1661
A	50	100	150	200	50	100	150	200	50	100	150	200	50	100	150	200	50	100	150	200	50	100	150	200
M	1	1	1	1	2	2	2	2	3	3	3	3	4	4	4	4	5	5	5	5	6	6	6	6
N	6	6	6	6	8	8	8	8	10	10	10	10	12	12	12	12	14	14	14	14	16	16	16	16
P	250	300	350	400	450	500	550	600	650	700	750	800	850	900	950	1000	1050	1100	1150	1200	1250	1300	1350	1400
Max. working speed (mm/s)	1000																900		800		700		600	

Z-axis stroke (mm)	50	100	150	200	250	300	350	400	450	500	550
H	470	520	570	620	670	720	770	820	870	920	970
Max. working speed (mm/s)	500										
Max. load capacity (kg)	22										

List of attachments

[Motor mounting parts]

Model No.	Mounted motor specifications	Motor mounting direction	Mounting parts	Shipment method	Motor capacity	Motor mounting bolt	
ETS-17	M	B	Coupling	Assembled at shipment	400 W	M5	4
	Y					M5	4
ETS-14	P					M4	4

*When "O" is selected for Mounted motor specification, the motor specification code for the 1st and 2nd axes is "M" or "P".

[Origin sensor/Limit sensor]

Manufacturer	Model	Quantity
OMRON Corporation	EE-SX672	6

*Refer to page 156 for sensor specifications.

[Other attachments for axis combinations]

Cableveyor, axis combination bracket

MEMO

Electric actuator Ball screw drive Slider

ETS Multi-Axis Series

Combination parts: Cableveyor assembly

RoHS

How to order

ETS - 210 A - CABC 13 - X 030

Ⓐ Ⓑ Ⓒ Ⓓ Ⓔ

Ⓐ Combined axes	
210	ETS-06 × ETS-05
430	ETS-12 × ETS-10
440	ETS-12 × ETS-12
530	ETS-13 × ETS-10
640	ETS-14 × ETS-12
650	ETS-14 × ETS-13
760	ETS-17 × ETS-14
870	ETS-22 × ETS-17
880	ETS-22 × ETS-22

Ⓑ Combination	
A	X-Y axes
G	X-Y axes with support guide
P	X-Z axes
F	Y-Z axes

Ⓒ Combination direction	
00	Parts without combination direction restrictions
01	Combination direction 1 dedicated parts
02	Combination direction 2 dedicated parts
13	Combination directions 1/3 dedicated parts
14	Combination directions 1/4 dedicated parts
23	Combination directions 2/3 dedicated parts
24	Combination directions 2/4 dedicated parts

Ⓓ Axes related to part specifications	
X	X-axis
Y	Y-axis
Z	Z-axis

ⒺⒹ Axis stroke	
000 to 150	0 mm 1500 mm (In 50 mm increments)

Single parts

ETS - TKP0450W78R75 30

Ⓐ Ⓑ

Ⓑ Link count	
01 to 99	1 link to 99 links

Ⓐ Cableveyor (type)	
TKP0450W78R75	Cableveyor (internal size: 78 × 25) [external size: 98 × 36]
TKP0450W78R50	Cableveyor (internal size: 78 × 25) [external size: 98 × 36]
TKP0350W50R50	Cableveyor (internal size: 50 × 22) [external size: 62 × 30]

Combination table

			1st axis		2nd axis		Part
Ⓐ Combined axes	Ⓑ Combination	Ⓒ Combination direction (Limited)	Ⓓ Axes related to part specifications	Ⓔ Ⓓ Axis stroke	Ⓓ Axes related to part specifications	Ⓔ Ⓓ Axis stroke	Cableveyor (Type)
ETS-210	A	13	X	100 to 800	-	-	TKP0350W50R50
		24					
		14	-	-	Y	50 to 350	TKP0350W50R50
		23					
ETS-430	A	13 *1	X	100 to 1050	-	-	TKP0350W50R50
		24 *1					
		14	-	-	Y	50 to 550	TKP0350W50R50
		23					
ETS-440	A	14	-	-	Y	50 to 550	TKP0350W50R50
		23					
ETS-650	A	13	X	100 to 1050	-	-	TKP0450W78R50
		24					
		14	-	-	Y	50 to 650	TKP0350W50R50
		23					
ETS-760	A	13 *3	X	100 to 1250	-	-	TKP0450W78R50
		24 *3					
		14	-	-	Y	50 to 650	TKP0350W50R50
		23					
ETS-870	A	13 *4	X	100 to 1500	-	-	TKP0450W78R75
		24 *4					
		14	-	-	Y	50 to 750	TKP0350W50R50
		23					
ETS-760	G	14	-	-	Y	200 to 850	TKP0350W50R50
		23					
ETS-870	G	14	-	-	Y	200 to 1050	TKP0350W50R50
		23					
ETS-650	P	01	X	100 to 1050	-	-	TKP0450W78R75
		02					
ETS-760	P	00 *2	-	-	Z	50 to 650	TKP0350W50R50
		01	X	100 to 1250	-	-	TKP0450W78R75
		02					
ETS-880	P	00	-	-	Z	50 to 950	TKP0350W50R50
		01	X	100 to 1500	-	-	TKP0450W78R75
		02					
ETS-530	F	00	Y	100 to 1050	-	-	TKP0350W50R50
ETS-640	F	00	Y	100 to 1050	-	-	TKP0350W50R50
ETS-760	F	00	Y	100 to 1250	-	-	TKP0350W50R50

*1 Common part with ETS-440A
*2 Common part with ETS-650P
*3 Common part with ETS-760G
*4 Common part with ETS-870G

Cableveyor dimensions

● ETS-210A-CABC13-X/CABC24-X

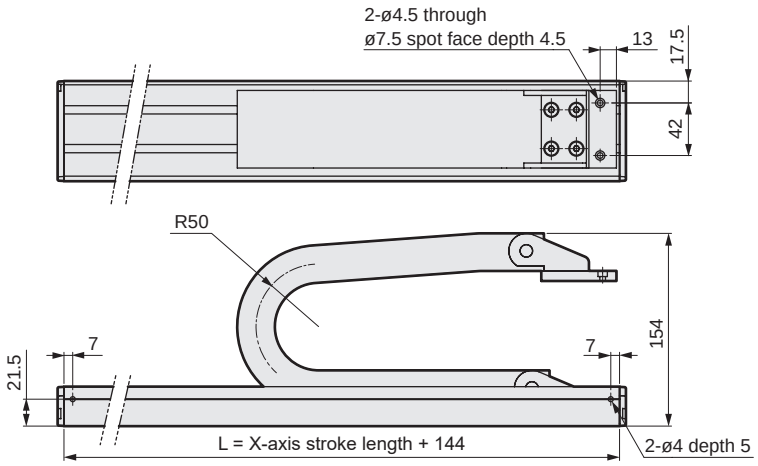

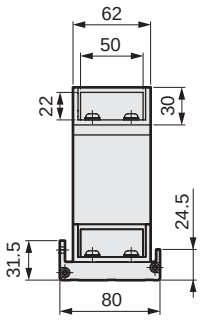

No. of cableveyor links = [A + stroke + (R × 3.14)]/S

X Cableveyor			
Connection direction	**A**	**R**	**S**
A1/A3	85	50	35
A2/A4	125	50	35

A: Basic length R: Bending radius S: Link pitch

● ETS-430A-CABC13-X/CABC24-X

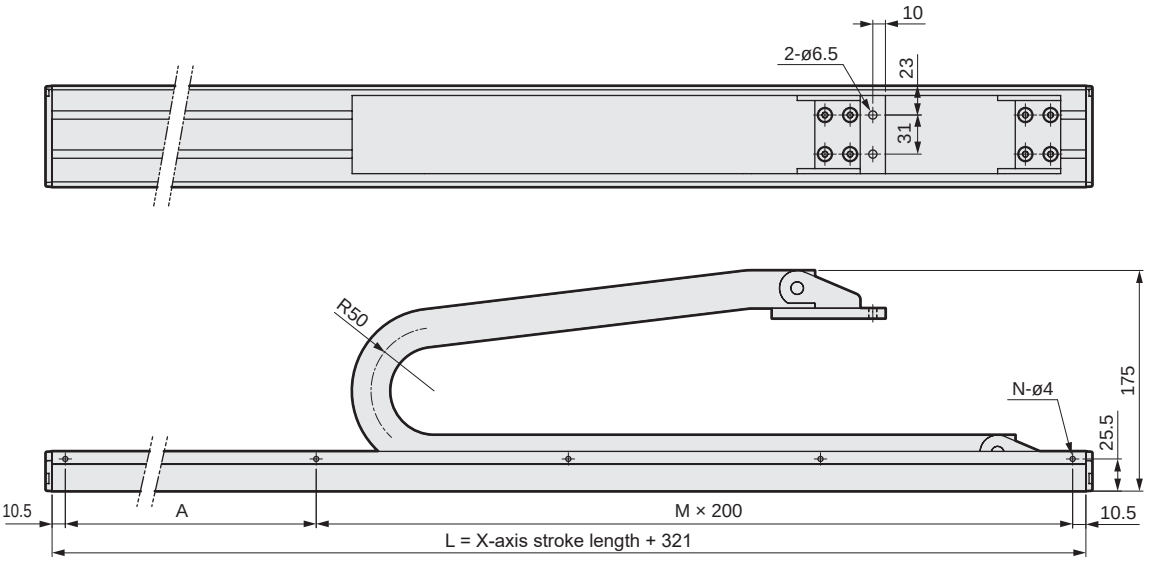

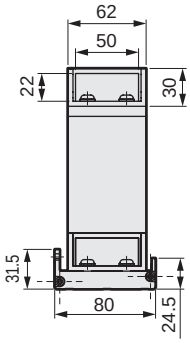

No. of cableveyor links = [A + stroke + (R × 3.14)]/S

X Cableveyor			
Connection direction	**A**	**R**	**S**
A1/A3	260	50	35
A2/A4	368	50	35

A: Basic length R: Bending radius S: Link pitch

X-axis stroke (mm)	100	150	200	250	300	350	400	450	500	550	600	650	700	750	800	850	900	950	1000	1050
L	421	471	521	571	621	671	721	771	821	871	921	971	1021	1071	1121	1171	1221	1271	1321	1371
A	200	50	100	150	200	50	100	150	200	50	100	150	200	50	100	150	200	50	100	150
M	2	2	2	2	3	3	3	3	4	4	4	4	5	5	5	5	6	6	6	6
N	4	4	4	4	5	5	5	5	6	6	6	6	7	7	7	7	8	8	8	8

Cableveyor dimensions

● ETS-650A-CABC13-X-A1/A3
-CABC24-X-A2/A4

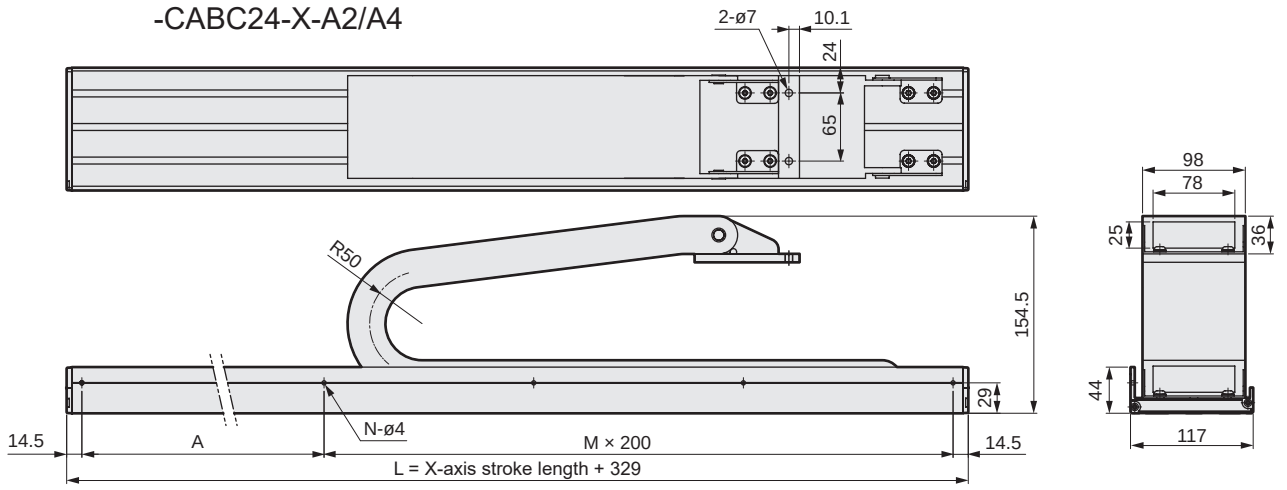

No. of cableveyor links = [A + stroke + (R × 3.14)]/S

X Cableveyor			
Connection direction	A	R	S
A1/A3	250	50	45
A2/A4	416	50	45

A: Basic length R: Bending radius S: Link pitch

X-axis stroke (mm)	100	150	200	250	300	350	400	450	500	550	600	650	700	750	800	850	900	950	1000	1050
L	429	479	529	579	629	679	729	779	829	879	929	979	1029	1079	1129	1179	1229	1279	1329	1379
A	200	50	100	150	200	50	100	150	200	50	100	150	200	50	100	150	200	50	100	150
M	1	2	2	2	2	3	3	3	3	4	4	4	4	5	5	5	5	6	6	6
N	3	4	4	4	4	5	5	5	5	6	6	6	6	7	7	7	7	8	8	8

● ETS-760A-CABC13-X-A1/A3
-CABC24-X-A2/A4

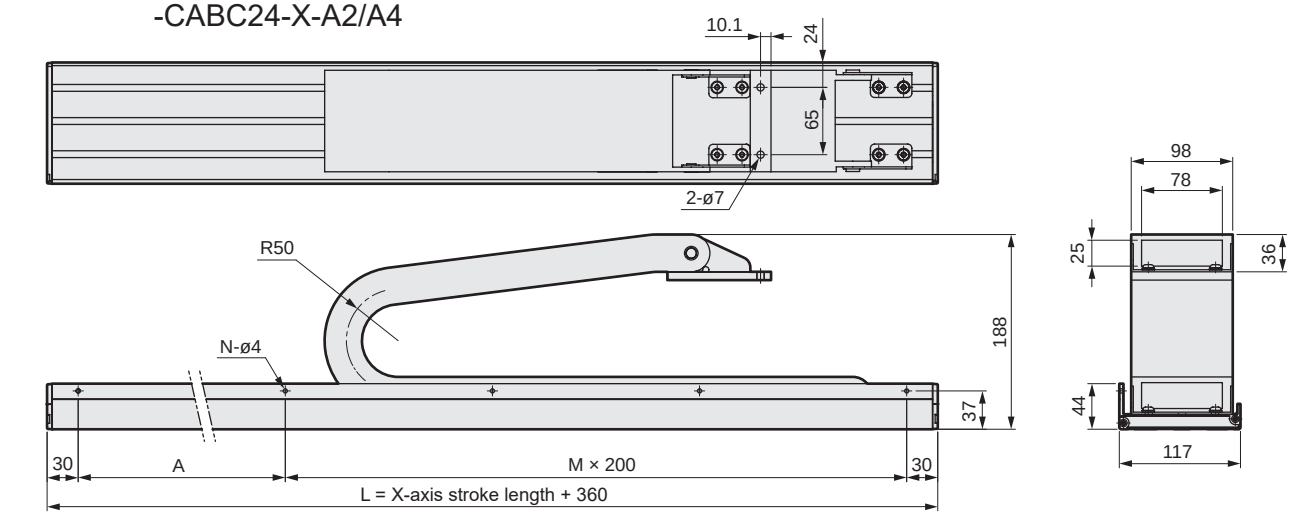

No. of cableveyor links = [A + stroke + (R × 3.14)]/S

X Cableveyor			
Connection direction	A	R	S
A1/A3	265	50	45
A2/A4	421	50	45

A: Basic length R: Bending radius S: Link pitch

X-axis stroke (mm)	100	150	200	250	300	350	400	450	500	550	600	650	700	750	800	850	900	950	1000	1050	1100	1150	1200	1250
L	460	510	560	610	660	710	760	810	860	910	960	1010	1060	1110	1160	1210	1260	1310	1360	1410	1460	1510	1560	1610
A	200	50	100	150	200	50	100	150	200	50	100	150	200	50	100	150	200	50	100	150	200	50	100	150
M	1	2	2	2	2	3	3	3	3	4	4	4	4	5	5	5	5	6	6	6	6	7	7	7
N	3	4	4	4	4	5	5	5	5	6	6	6	6	7	7	7	7	8	8	8	8	9	9	9

Cableveyor dimensions

● ETS-870A-CABC13-X-A1/A3
-CABC24-X-A2/A4

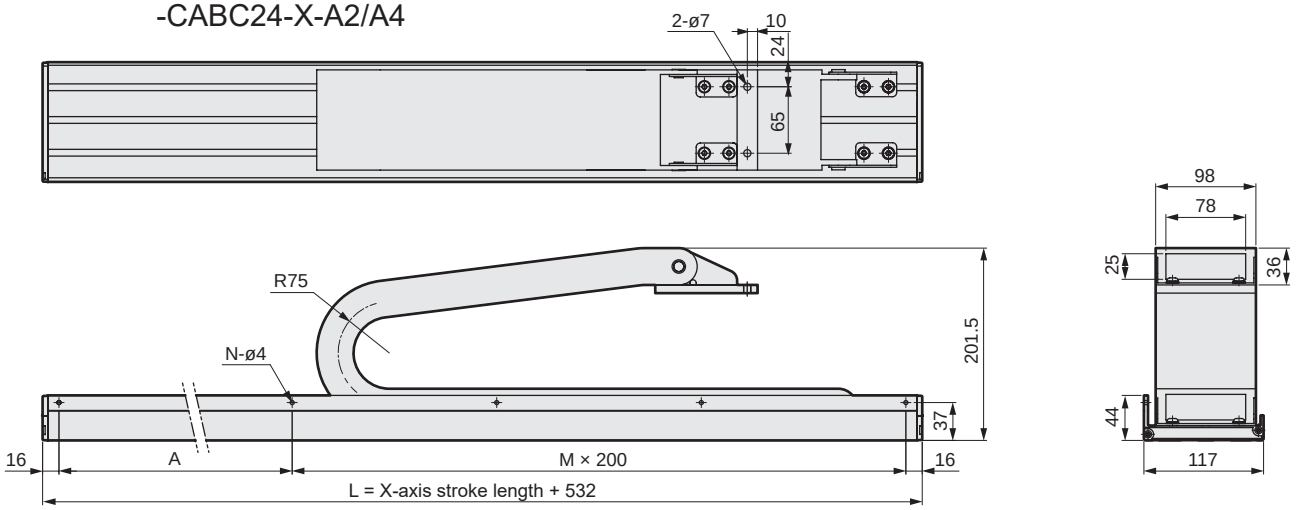

No. of cableveyor links = [A + stroke + (R × 3.14)]/S

X Cableveyor			
Connection direction	**A**	**R**	**S**
A1/A3	355	75	45
A2/A4	605	75	45

A: Basic length R: Bending radius S: Link pitch

X-axis stroke (mm)	100	150	200	250	300	350	400	450	500	550	600	650	700	750	800	850	900	950	1000	1050	1100	1150	1200	1250	1300	1350	1400	1450	1500
L	632	682	732	782	832	882	932	982	1032	1082	1132	1182	1232	1282	1332	1382	1432	1482	1532	1582	1632	1682	1732	1782	1832	1882	1932	1982	2032
A	200	50	100	150	200	50	100	150	200	50	100	150	200	50	100	150	200	50	100	150	200	50	100	150	200	50	100	150	200
M	2	3	3	3	3	4	4	4	4	5	5	5	5	6	6	6	6	7	7	7	7	8	8	8	8	9	9	9	9
N	4	5	5	5	5	6	6	6	6	7	7	7	7	8	8	8	8	9	9	9	9	10	10	10	10	11	11	11	11

● ETS-210A-CABC14-Y

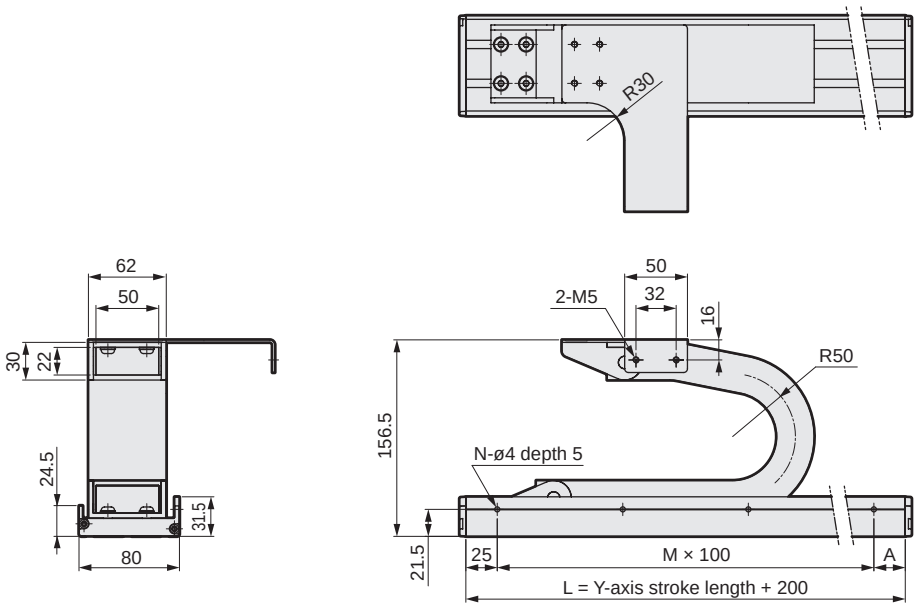

Y-axis stroke (mm)	50	100	150	200	250	300	350
L	250	300	350	400	450	500	550
A	25	75	25	75	25	75	25
M	2	2	3	3	4	4	5
N	3	3	4	4	5	5	6

No. of cableveyor links = [A + stroke + (R × 3.14)]/S

Y Cableveyor			
Connection direction	**A**	**R**	**S**
A1/A4	85	50	35

A: Basic length R: Bending radius S: Link pitch

Cableveyor dimensions

● ETS-210A-CABC23-Y

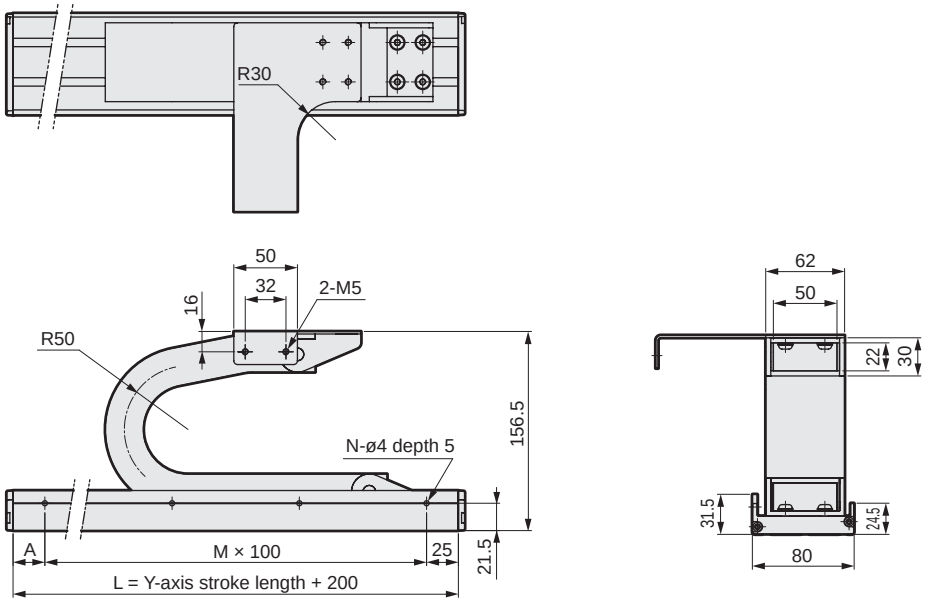

Y-axis stroke (mm)	50	100	150	200	250	300	350
L	250	300	350	400	450	500	550
A	25	75	25	75	25	75	25
M	2	2	3	3	4	4	5
N	3	3	4	4	5	5	6

No. of cableveyor links = [A + stroke + (R × 3.14)]/S

Y Cableveyor			
Connection direction	A	R	S
A1/A3	105	50	35

A: Basic length R: Bending radius S: Link pitch

● ETS-430A-CABC14-Y

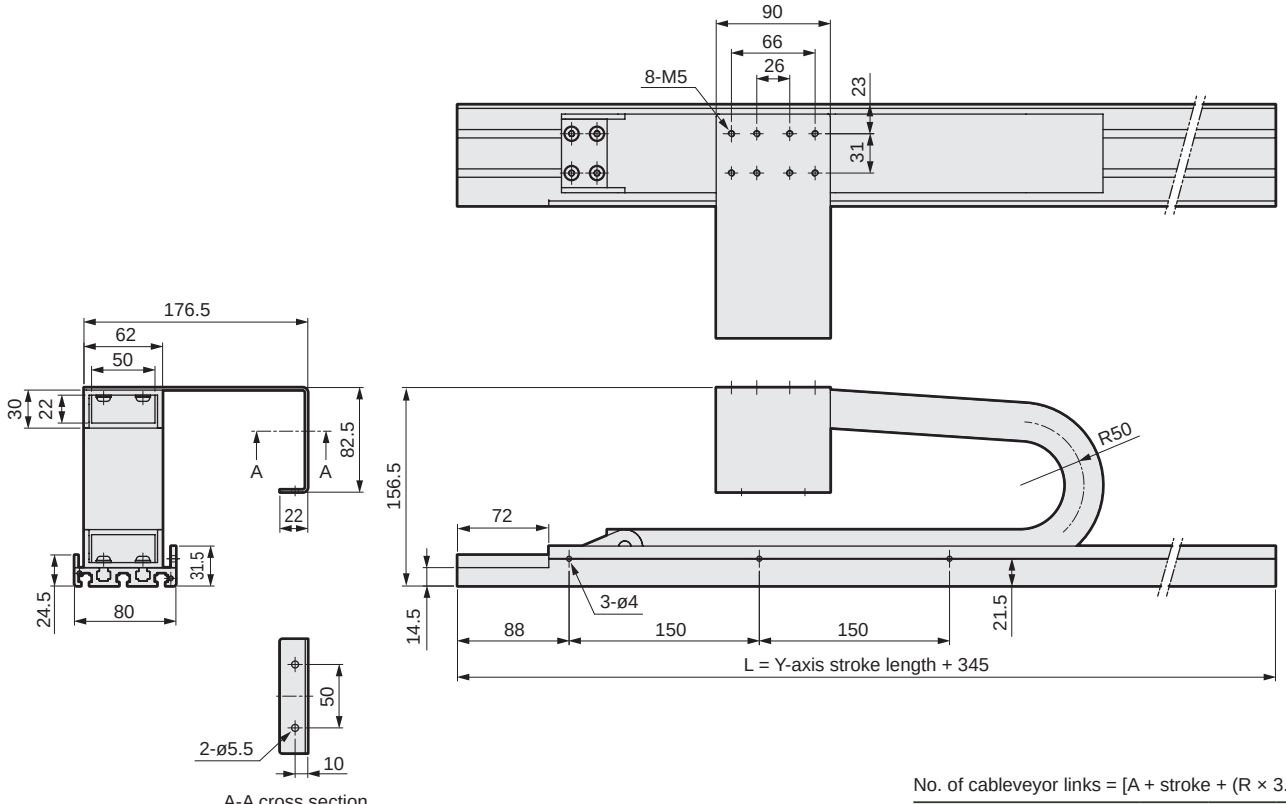

A-A cross section

Y-axis stroke (mm)	50	100	150	200	250	300	350	400	450	500	550
L	395	445	495	545	595	645	695	745	795	845	895

No. of cableveyor links = [A + stroke + (R × 3.14)]/S

Y Cableveyor			
Connection direction	A	R	S
A1/A4	226	50	35

A: Basic length R: Bending radius S: Link pitch

Cableveyor dimensions

● ETS-430A-CABC23-Y

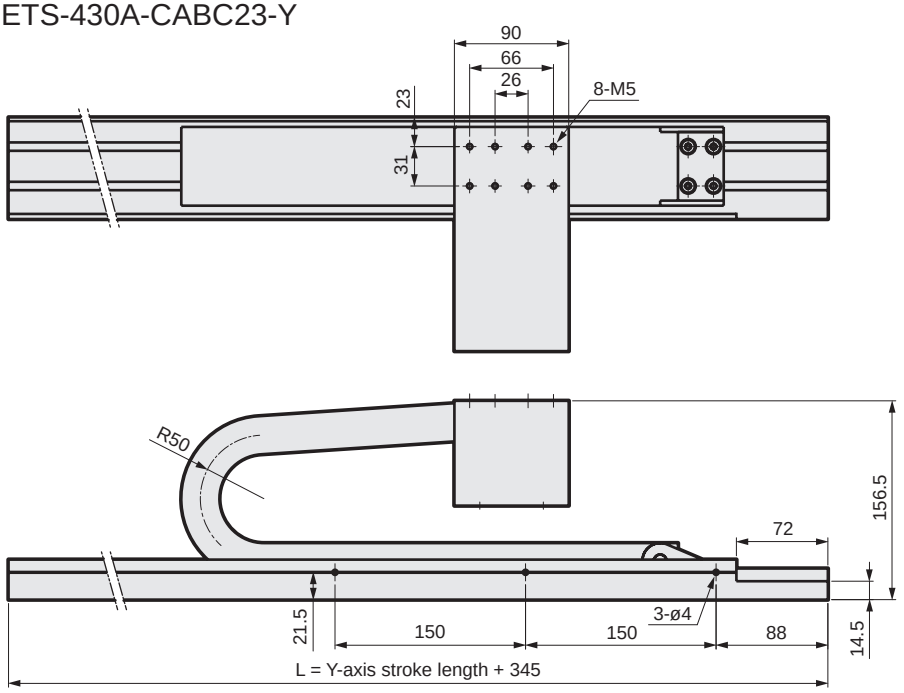

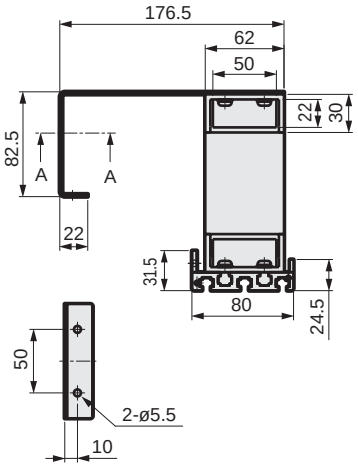

A-A cross section

Y-axis stroke (mm)	50	100	150	200	250	300	350	400	450	500	550
L	395	445	495	545	595	645	695	745	795	845	895

No. of cableveyor links = [A + stroke + (R × 3.14)]/S

Y Cableveyor			
Connection direction	A	R	S
A2/A3	226	50	35

A: Basic length R: Bending radius S: Link pitch

● ETS-440A-CABC14-Y

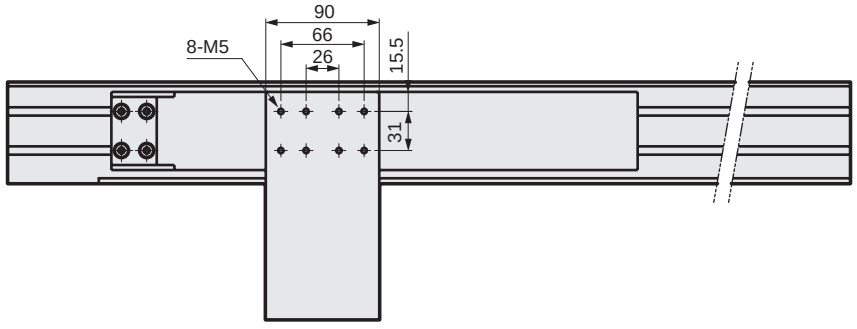

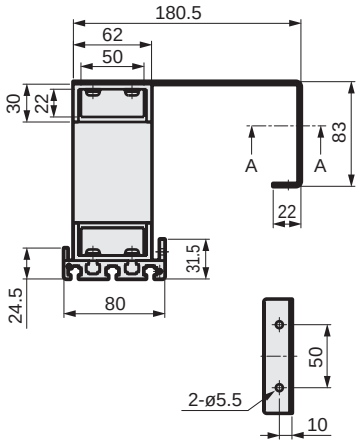

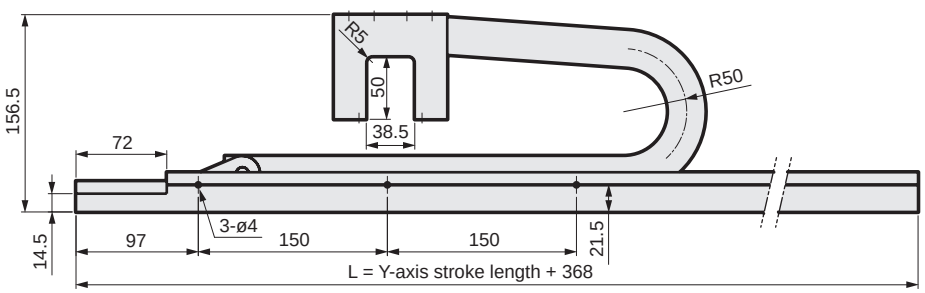

A-A cross section

Y-axis stroke (mm)	50	100	150	200	250	300	350	400	450	500	550
L	418	468	518	568	618	668	718	768	818	868	918

No. of cableveyor links = [A + stroke + (R × 3.14)]/S

Y Cableveyor			
Connection direction	A	R	S
A1/A4	207	50	35

A: Basic length R: Bending radius S: Link pitch

Cableveyor dimensions

● ETS-440A-CABC23-Y

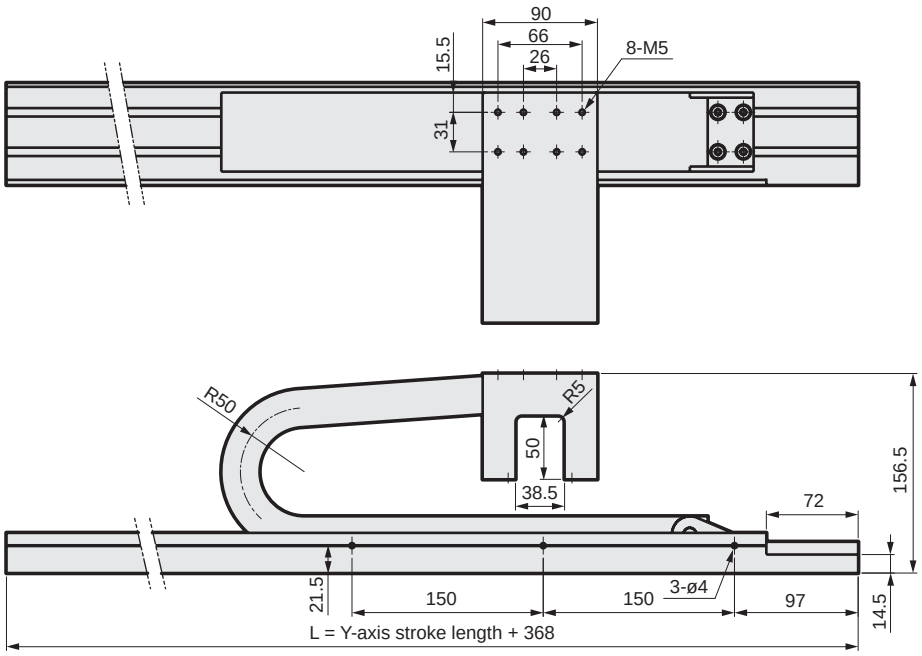

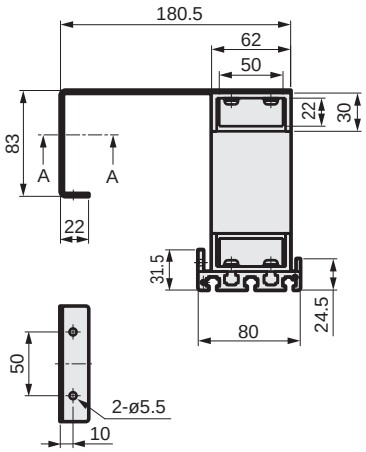

A-A cross section

Y-axis stroke (mm)	50	100	150	200	250	300	350	400	450	500	550
L	418	468	518	568	618	668	718	768	818	868	918

No. of cableveyor links = [A + stroke + (R × 3.14)]/S

Y Cableveyor			
Connection direction	A	R	S
A2/A3	207	50	35

A: Basic length R: Bending radius S: Link pitch

● ETS-650A-CABC14-Y

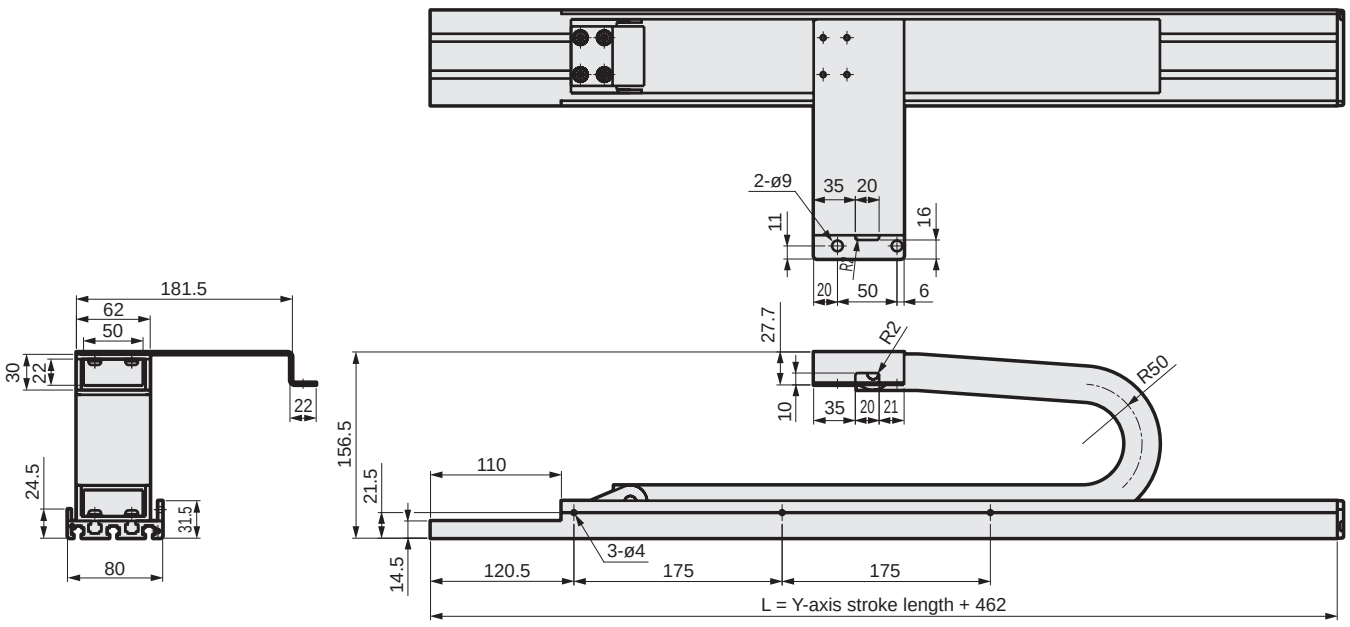

Y-axis stroke (mm)	50	100	150	200	250	300	350	400	450	500	550	600	650
L	549	599	649	699	749	799	849	899	949	999	1049	1099	1149

No. of cableveyor links = [A + stroke + (R × 3.14)]/S

Y Cableveyor			
Connection direction	A	R	S
A1/A4	284	50	35

A: Basic length R: Bending radius S: Link pitch

Cableveyor dimensions

● ETS-650A-CABC23-Y

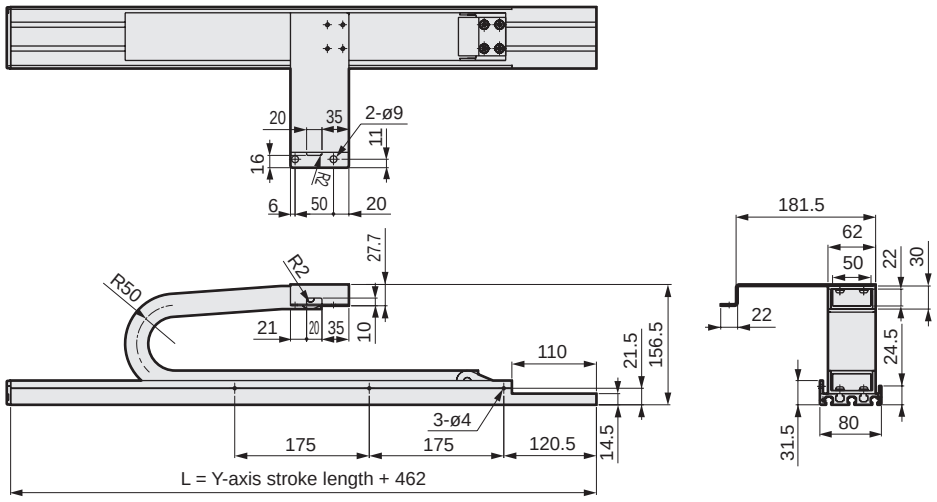

No. of cableveyor links = [A + stroke + (R × 3.14)]/S

Y Cableveyor			
Connection direction	A	R	S
A2/A3	284	50	35

A: Basic length R: Bending radius S: Link pitch

Y-axis stroke (mm)	50	100	150	200	250	300	350	400	450	500	550	600	650
L	549	599	649	699	749	799	849	899	949	999	1049	1099	1149

● ETS-760A-CABC14-Y

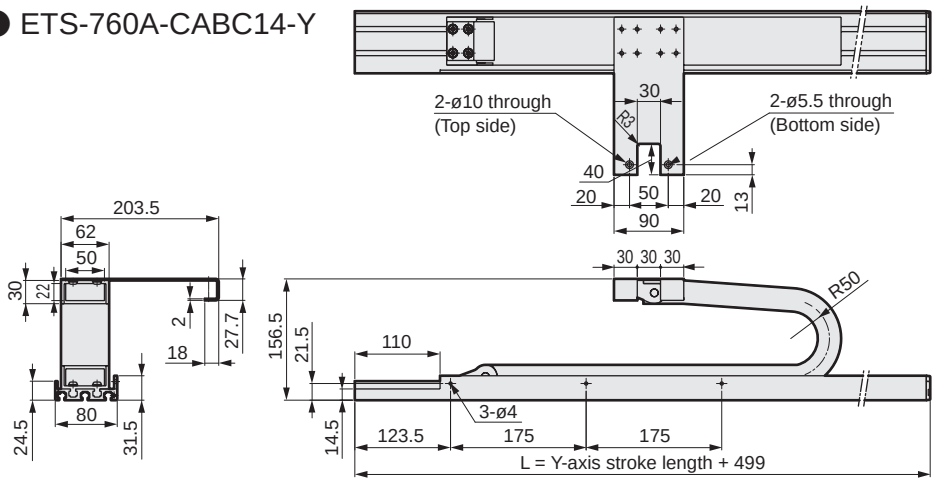

No. of cableveyor links = [A + stroke + (R × 3.14)]/S

Y Cableveyor			
Connection direction	A	R	S
A1/A4	298	50	35

A: Basic length R: Bending radius S: Link pitch

Y-axis stroke (mm)	50	100	150	200	250	300	350	400	450	500	550	600	650
L	549	599	649	699	749	799	849	899	949	999	1049	1099	1149

● ETS-760G-CABC14-Y

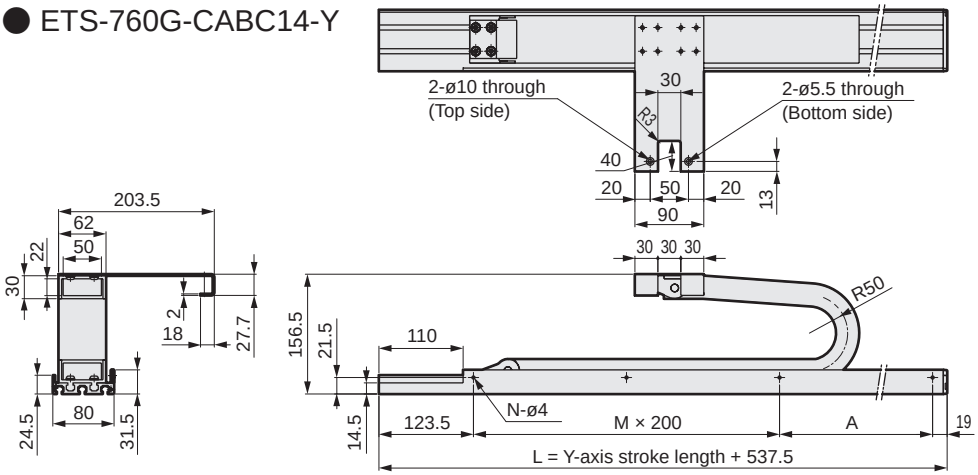

No. of cableveyor links = [A + stroke + (R × 3.14)]/S

Y Cableveyor			
Connection direction	A	R	S
G1/G4	298	50	35

A: Basic length R: Bending radius S: Link pitch

Y-axis stroke (mm)	200	250	300	350	400	450	500	550	600	650	700	750	800	850
L	737.5	787.5	837.5	887.5	937.5	987.5	1037.5	1087.5	1137.5	1187.5	1237.5	1287.5	1337.5	1387.5
A	200	50	100	150	200	50	100	150	200	50	100	150	200	50
M	2	3	3	3	3	4	4	4	4	5	5	5	5	6
N	4	5	5	5	5	6	6	6	6	7	7	7	7	8

Cableveyor dimensions

● ETS-870A-CABC14-Y

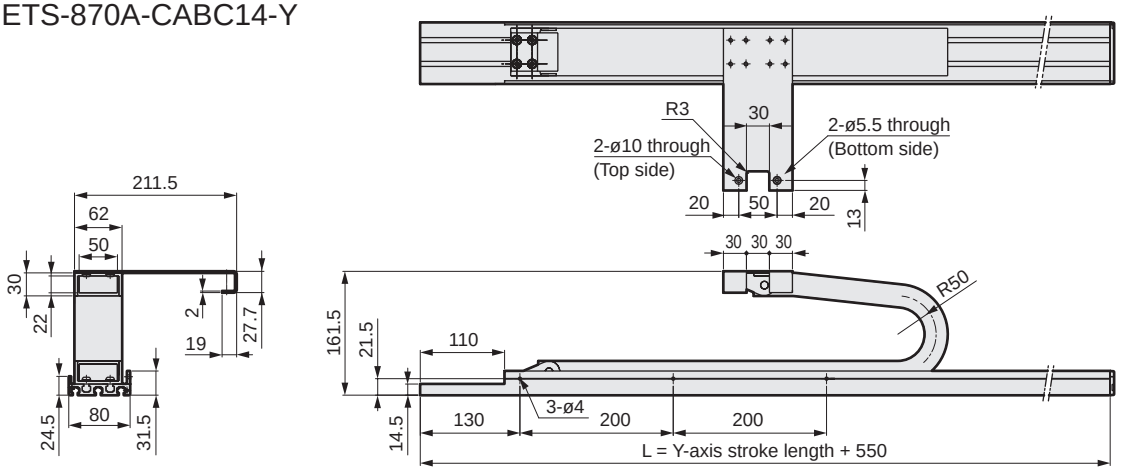

Y-axis stroke (mm)	50	100	150	200	250	300	350	400	450	500	550	600	650	700	750
L	600	650	700	750	800	850	900	950	1000	1050	1100	1150	1200	1250	1300

● ETS-870G-CABC14-Y

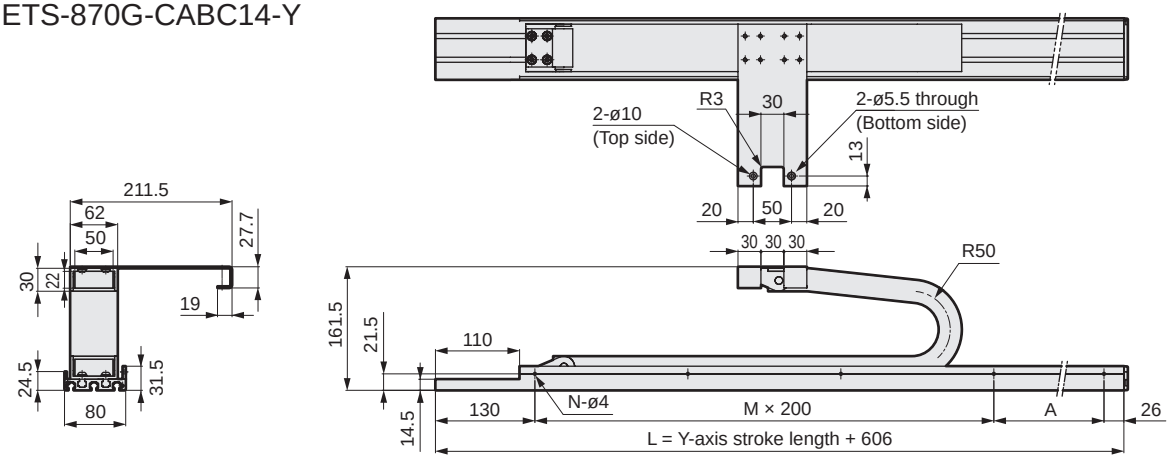

Y-axis stroke (mm)	200	250	300	350	400	450	500	550	600	650	700	750	800	850	900	950	1000	1050
L	806	856	906	956	1006	1056	1106	1156	1206	1256	1306	1356	1406	1456	1506	1556	1606	1656
A	50	100	150	200	50	100	150	200	50	100	150	200	50	100	150	200	50	100
M	3	3	3	3	4	4	4	4	5	5	5	5	6	6	6	6	7	7
N	5	5	5	5	6	6	6	6	7	7	7	7	8	8	8	8	9	9

No. of cableveyor links = [A + stroke + (R × 3.14)]/S

Y Cableveyor			
Connection direction	A	R	S
A1/A4/G1/G4	359	50	35

A: Basic length R: Bending radius S: Link pitch

● ETS-760A-CABC23-Y

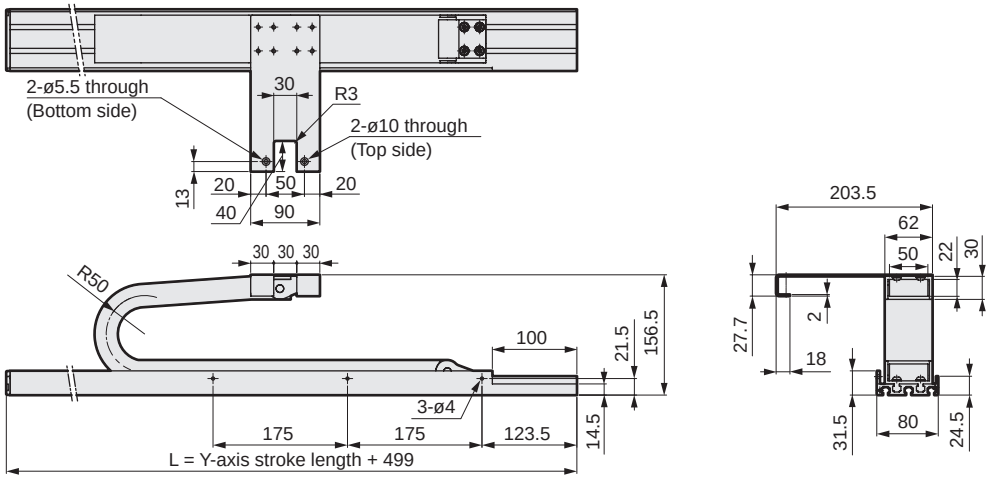

Y-axis stroke (mm)	50	100	150	200	250	300	350	400	450	500	550	600	650
L	549	599	649	699	749	799	849	899	949	999	1049	1099	1149

Cableveyor dimensions

● ETS-760G-CABC23-Y

No. of cableveyor links = [A + stroke + (R × 3.14)]/S

Y Cableveyor			
Connection direction	A	R	S
A1/A4/G1/G4	298	50	35

A: Basic length R: Bending radius S: Link pitch

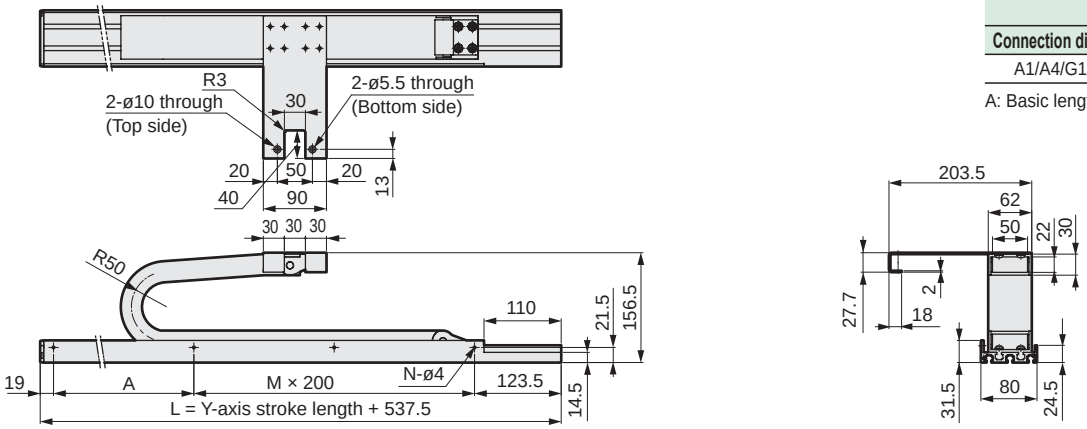

Y-axis stroke (mm)	200	250	300	350	400	450	500	550	600	650	700	750	800	850
L	737.5	787.5	837.5	887.5	937.5	987.5	1037.5	1087.5	1137.5	1187.5	1237.5	1287.5	1337.5	1387.5
A	200	50	100	150	200	50	100	150	200	50	100	150	200	50
M	2	3	3	3	3	4	4	4	4	5	5	5	5	6
N	4	5	5	5	5	6	6	6	6	7	7	7	7	8

● ETS-870A-CABC23-Y

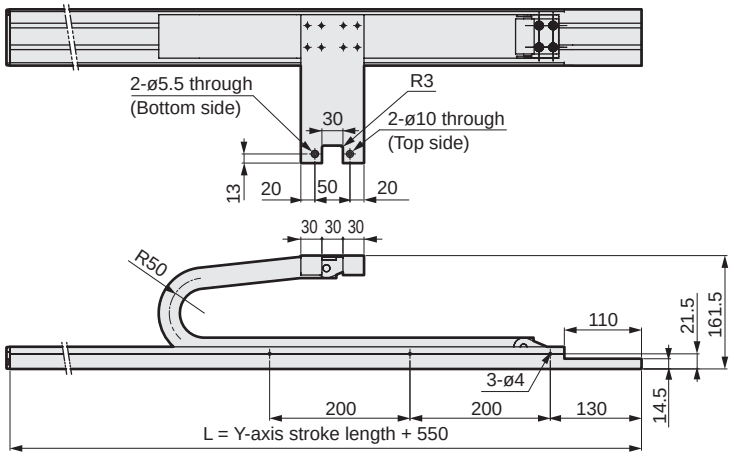

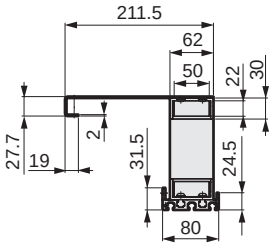

Y-axis stroke (mm)	50	100	150	200	250	300	350	400	450	500	550	600	650	700	750
L	600	650	700	750	800	850	900	950	1000	1050	1100	1150	1200	1250	1300

● ETS-870G-CABC23-Y

No. of cableveyor links = [A + stroke + (R × 3.14)]/S

Y Cableveyor			
Connection direction	A	R	S
A2/A3/G2/G3	359	50	35

A: Basic length R: Bending radius S: Link pitch

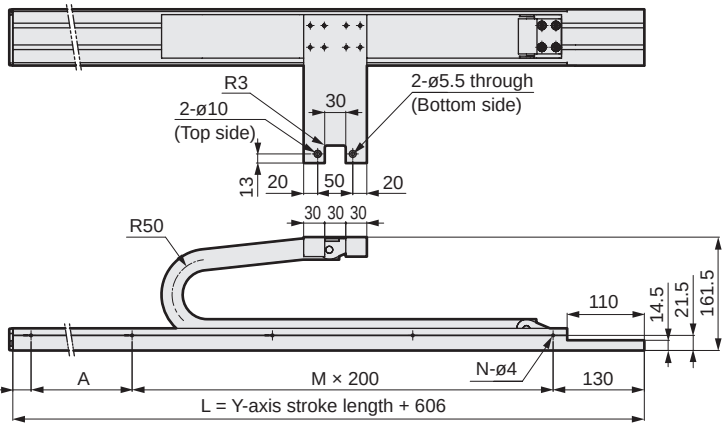

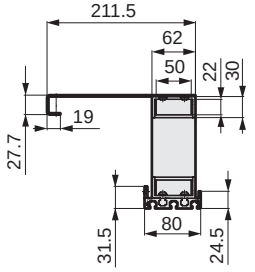

Y-axis stroke (mm)	200	250	300	350	400	450	500	550	600	650	700	750	800	850	900	950	1000	1050
L	806	856	906	956	1006	1056	1106	1156	1206	1256	1306	1356	1406	1456	1506	1556	1606	1656
A	50	100	150	200	50	100	150	200	50	100	150	200	50	100	150	200	50	100
M	3	3	3	3	4	4	4	4	5	5	5	5	6	6	6	6	7	7
N	5	5	5	5	6	6	6	6	7	7	7	7	8	8	8	8	9	9

Cableveyor dimensions

● ETS-650P-CABC01-X

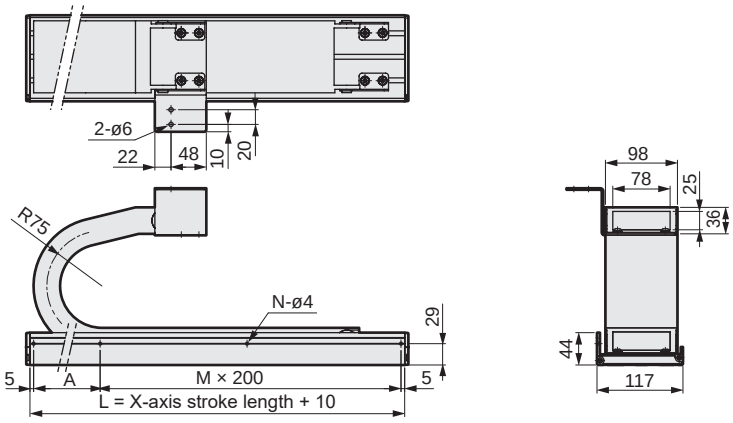

No. of cableveyor links = [A + stroke + (R × 3.14)]/S

X Cableveyor			
Connection direction	A	R	S
P1	202	75	45

A: Basic length R: Bending radius S: Link pitch

X-axis stroke (mm)	100	150	200	250	300	350	400	450	500	550	600	650	700	750	800	850	900	950	1000	1050
L	310	335	360	385	410	435	460	485	510	535	560	585	610	635	660	685	710	735	760	785
A	100	150	200	50	100	150	200	50	100	150	200	50	100	150	200	50	100	150	200	50
M	0	0	0	1	1	1	1	2	2	2	2	3	3	3	3	4	4	4	4	5
N	2	2	2	3	3	3	3	4	4	4	4	5	5	5	5	6	6	6	6	7

● ETS-760P-CABC01-X

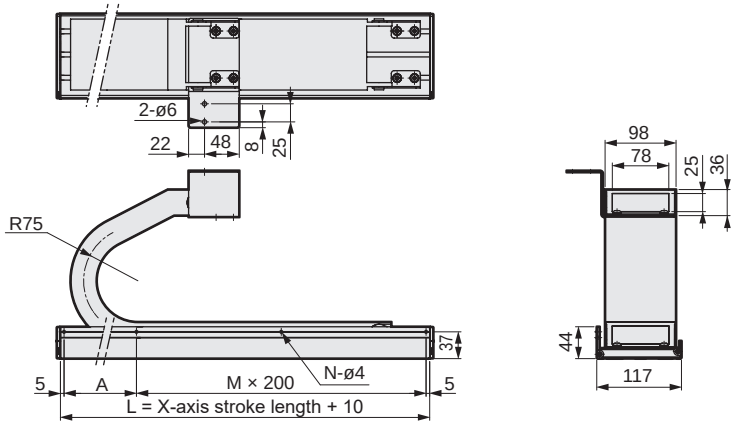

No. of cableveyor links = [A + stroke + (R × 3.14)]/S

X Cableveyor			
Connection direction	A	R	S
P1	209	75	45

A: Basic length R: Bending radius S: Link pitch

X-axis stroke (mm)	100	150	200	250	300	350	400	450	500	550	600	650	700	750	800	850	900	950	1000	1050	1100	1150	1200	1250
L	310	335	360	385	410	435	460	485	510	535	560	585	610	635	660	685	710	735	760	785	810	835	860	885
A	100	150	200	50	100	150	200	50	100	150	200	50	100	150	200	50	100	150	200	50	100	150	200	50
M	0	0	0	1	1	1	1	2	2	2	2	3	3	3	3	4	4	4	4	5	5	5	5	6
N	2	2	2	3	3	3	3	4	4	4	4	5	5	5	5	6	6	6	6	7	7	7	7	8

● ETS-880P-CABC01-X

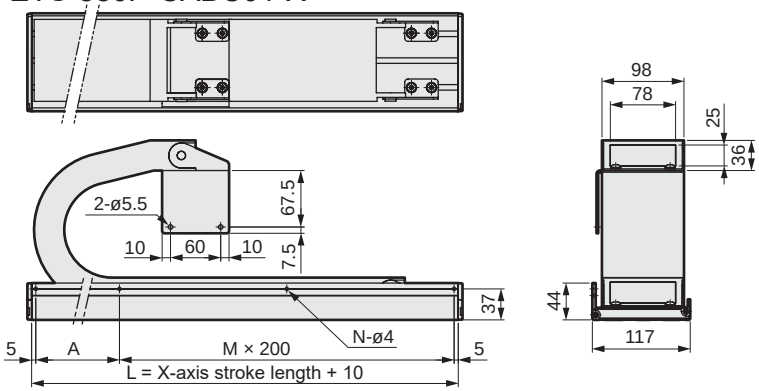

No. of cableveyor links = [A + stroke + (R × 3.14)]/S

X Cableveyor			
Connection direction	A	R	S
P1	202	75	45

A: Basic length R: Bending radius S: Link pitch

X-axis stroke (mm)	100	150	200	250	300	350	400	450	500	550	600	650	700	750	800	850	900	950	1000	1050	1100	1150	1200	1250	1300	1350	1400	1450	1500
L	310	335	360	385	410	435	460	485	510	535	560	585	610	635	660	685	710	735	760	785	810	835	860	885	910	935	960	985	1010
A	100	150	200	50	100	150	200	50	100	150	200	50	100	150	200	50	100	150	200	50	100	150	200	50	100	150	200	50	100
M	0	0	0	1	1	1	1	2	2	2	2	3	3	3	3	4	4	4	4	5	5	5	5	6	6	6	6	7	7
N	2	2	2	3	3	3	3	4	4	4	4	5	5	5	5	6	6	6	6	7	7	7	7	8	8	8	8	9	9

Cableveyor dimensions

● ETS-650P-CABC02-X

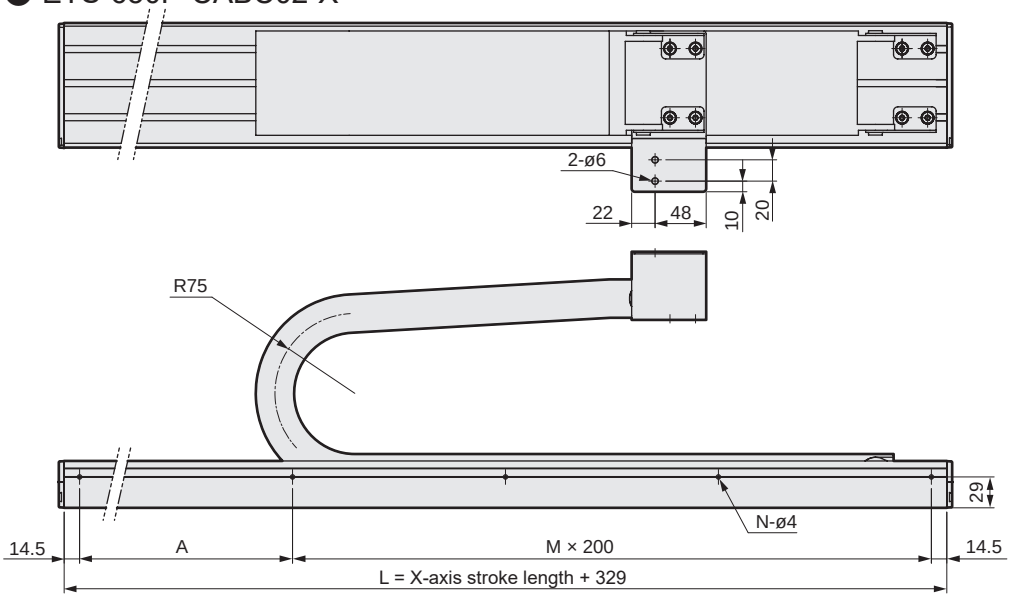

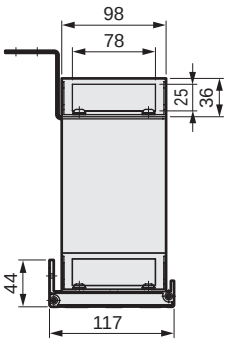

No. of cableveyor links = [A + stroke + (R × 3.14)]/S

X Cableveyor			
Connection direction	A	R	S
P2	296	75	45

A: Basic length R: Bending radius S: Link pitch

X-axis stroke (mm)	100	150	200	250	300	350	400	450	500	550	600	650	700	750	800	850	900	950	1000	1050
L	429	479	529	579	629	679	729	779	829	879	929	979	1029	1079	1129	1179	1229	1279	1329	1379
A	200	50	100	150	200	50	100	150	200	50	100	150	200	50	100	150	200	50	100	150
M	1	2	2	2	2	3	3	3	3	4	4	4	4	5	5	5	5	6	6	6
N	3	4	4	4	4	5	5	5	5	6	6	6	6	7	7	7	7	8	8	8

● ETS-760P-CABC02-X

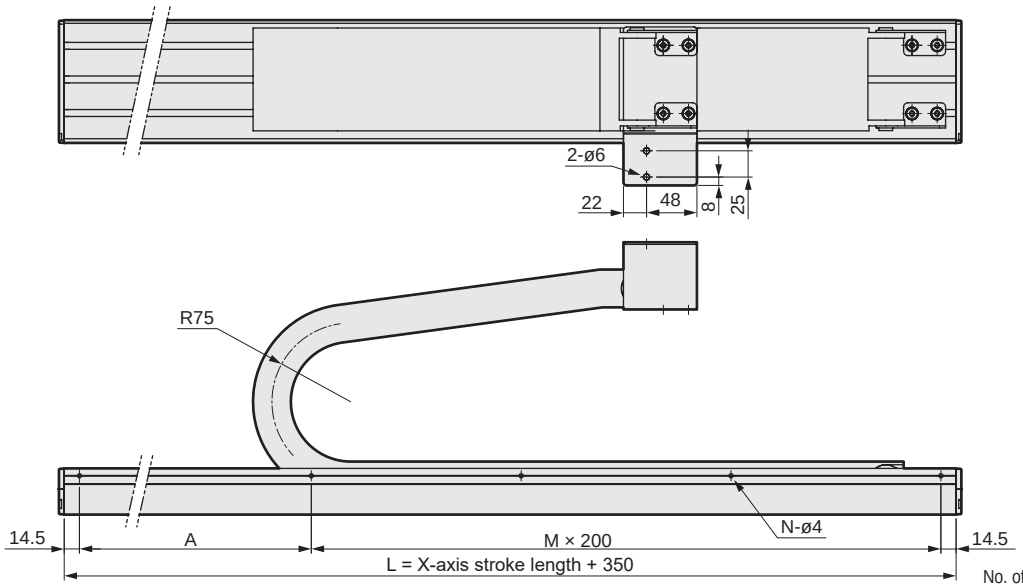

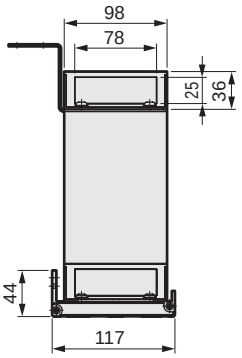

No. of cableveyor links = [A + stroke + (R × 3.14)]/S

X Cableveyor			
Connection direction	A	R	S
P2	317	75	45

A: Basic length R: Bending radius S: Link pitch

X-axis stroke (mm)	100	150	200	250	300	350	400	450	500	550	600	650	700	750	800	850	900	950	1000	1050	1100	1150	1200	1250
L	450	500	550	600	650	700	750	800	850	900	950	1000	1050	1100	1150	1200	1250	1300	1350	1400	1450	1500	1550	1600
A	200	50	100	150	200	50	100	150	200	50	100	150	200	50	100	150	200	50	100	150	200	50	100	150
M	1	2	2	2	2	3	3	3	3	4	4	4	4	5	5	5	5	6	6	6	6	7	7	7
N	3	4	4	4	4	5	5	5	5	6	6	6	6	7	7	7	7	8	8	8	8	9	9	9

Cableveyor dimensions

● ETS-880P-CABC02-X

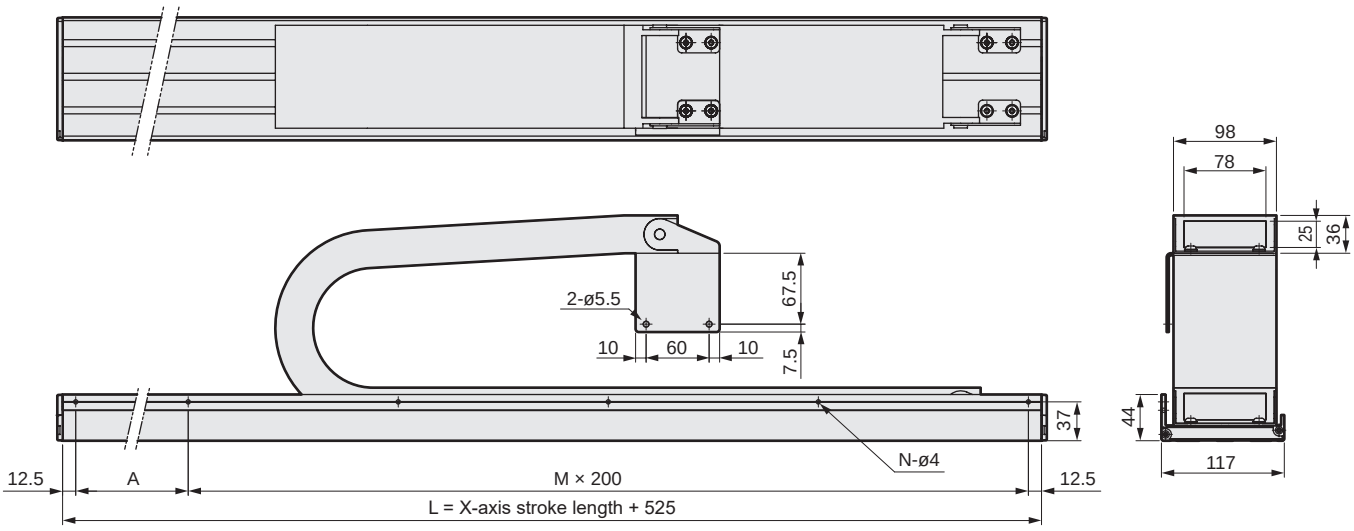

No. of cableveyor links = [A + stroke + (R × 3.14)]/S

X Cableveyor			
Connection direction	A	R	S
P1/P2	368	75	45

A: Basic length R: Bending radius S: Link pitch

X-axis stroke (mm)	100	150	200	250	300	350	400	450	500	550	600	650	700	750	800	850	900	950	1000	1050	1100	1150	1200	1250	1300	1350	1400	1450	1500
L	625	675	725	775	825	875	925	975	1025	1075	1125	1175	1225	1275	1325	1375	1425	1475	1525	1575	1625	1675	1725	1775	1825	1875	1925	1975	2025
A	200	50	100	150	200	50	100	150	200	50	100	150	200	50	100	150	200	50	100	150	200	50	100	150	200	50	100	150	200
M	2	3	3	3	3	4	4	4	4	5	5	5	5	6	6	6	6	7	7	7	7	8	8	8	8	9	9	9	9
N	4	5	5	5	5	6	6	6	6	7	7	7	7	8	8	8	8	9	9	9	9	10	10	10	10	11	11	11	11

● ETS-650P/760P-CABC00-Z

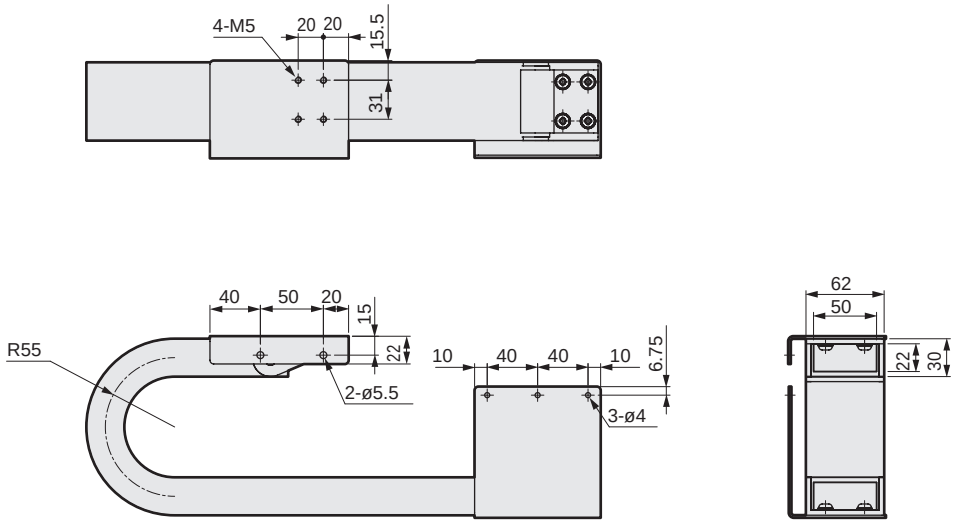

No. of cableveyor links = [A + stroke + (R × 3.14)]/S

Z Cableveyor			
Connection direction	A	R	S
F1/F3	100	50	35

A: Basic length R: Bending radius S: Link pitch

Cableveyor dimensions

● ETS-880P-CABC00-Z

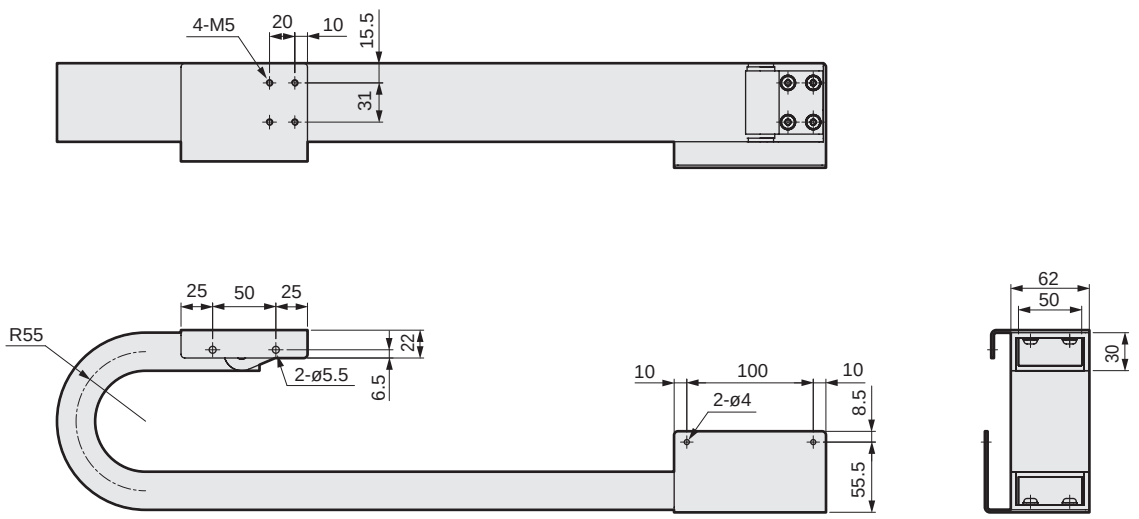

No. of cableveyor links = [A + stroke + (R × 3.14)]/S

Z Cableveyor			
Connection direction	A	R	S
P1/P2	250	50	35

A: Basic length R: Bending radius S: Link pitch

● ETS-530F-CABC00-Y

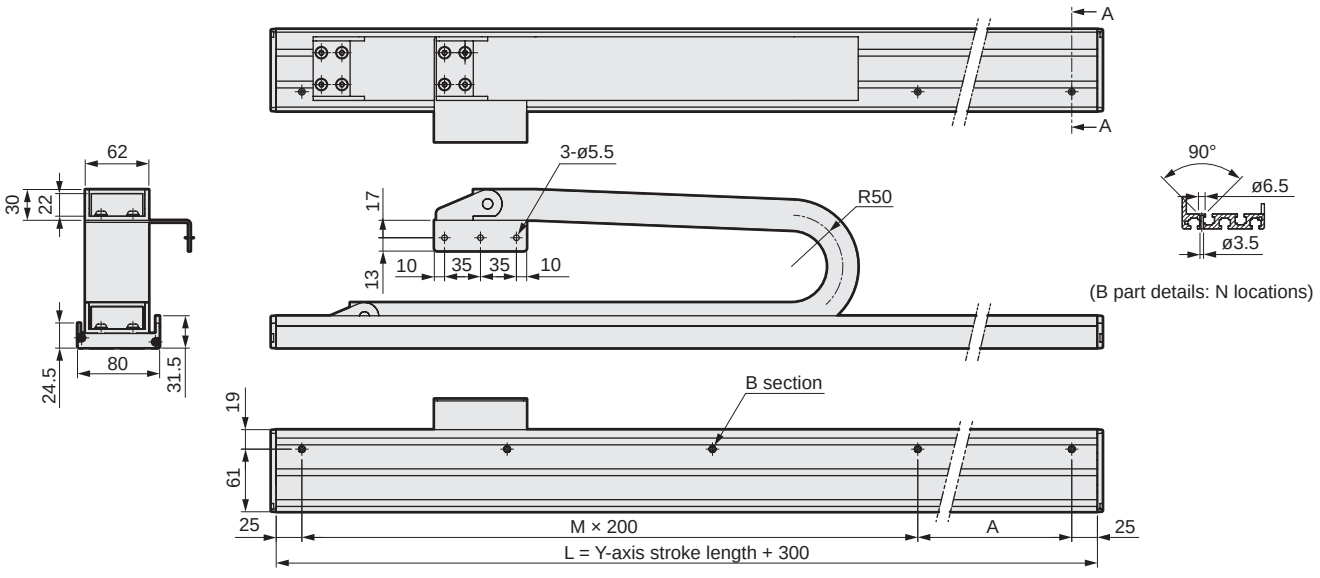

No. of cableveyor links = [A + stroke + (R × 3.14)]/S

Y Cableveyor			
Connection direction	A	R	S
F1/F3	240	50	35

A: Basic length R: Bending radius S: Link pitch

Y-axis stroke (mm)	100	150	200	250	300	350	400	450	500	550	600	650	700	750	800	850	900	950	1000	1050
L	400	450	500	550	600	650	700	750	800	850	900	950	1000	1050	1100	1150	1200	1250	1300	1350
A	150	200	50	100	150	200	50	100	150	200	50	100	150	200	50	100	150	200	50	100
M	1	1	2	2	2	2	3	3	3	3	4	4	4	4	5	5	5	5	6	6
N	3	3	4	4	4	4	5	5	5	5	6	6	6	6	7	7	7	7	8	8

Cableveyor dimensions

● ETS-640F-CABC00-Y

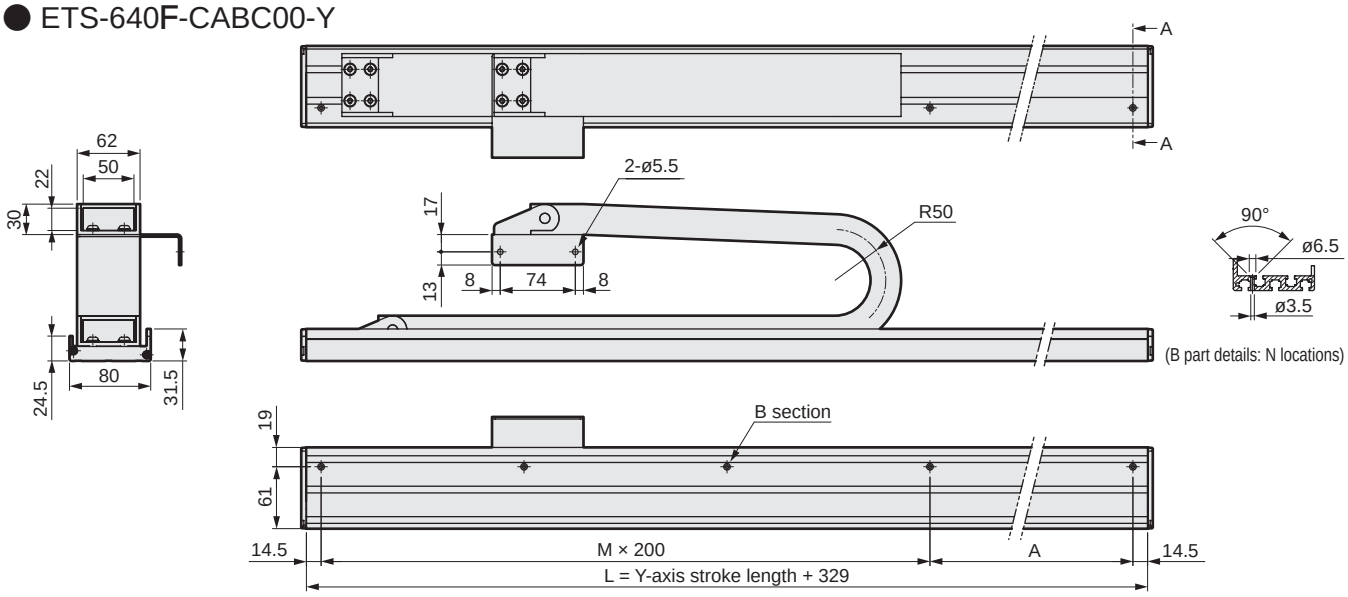

No. of cableveyor links = [A + stroke + (R × 3.14)]/S

Y Cableveyor			
Connection direction	A	R	S
F1/F3	250	50	35

A: Basic length R: Bending radius S: Link pitch

Y-axis stroke (mm)	100	150	200	250	300	350	400	450	500	550	600	650	700	750	800	850	900	950	1000	1050
L	429	479	529	579	629	679	729	779	829	879	929	979	1029	1079	1129	1179	1229	1279	1329	1379
A	200	50	100	150	200	50	100	150	200	50	100	150	200	50	100	150	200	50	100	150
M	1	2	2	2	2	3	3	3	3	4	4	4	4	5	5	5	5	6	6	6
N	3	4	4	4	4	5	5	5	5	6	6	6	6	7	7	7	7	8	8	8

● ETS-760F-CABC00-Y

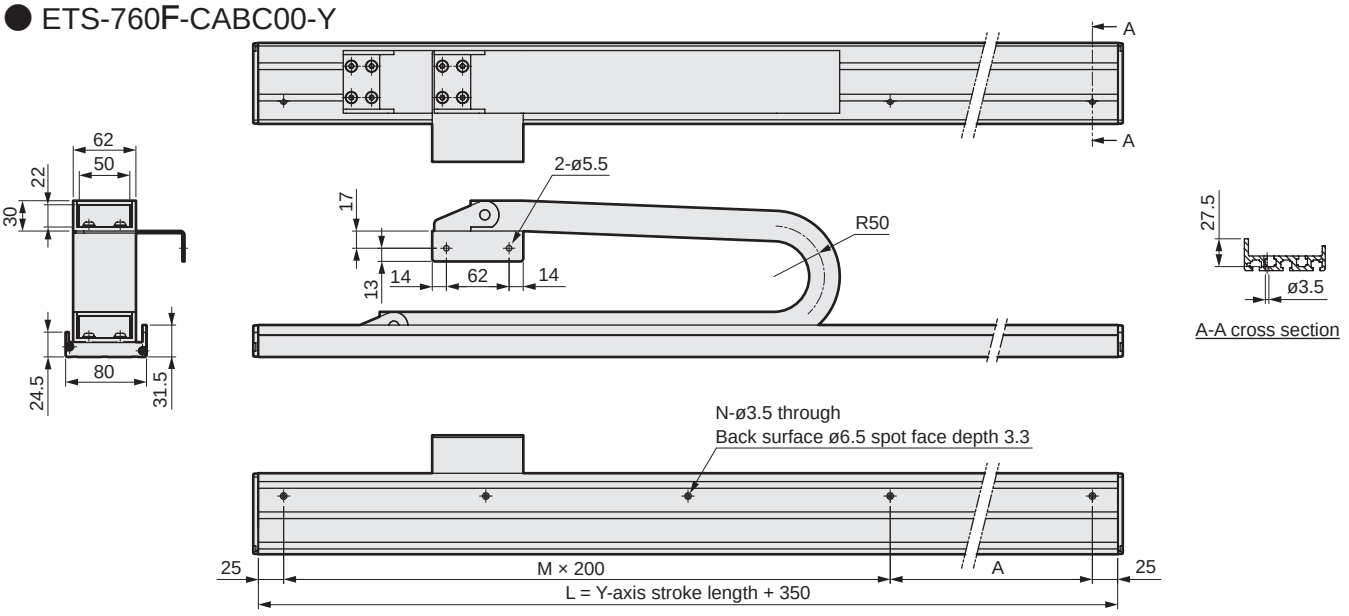

No. of cableveyor links = [A + stroke + (R × 3.14)]/S

Y Cableveyor			
Connection direction	A	R	S
F1/F3	190	50	35

A: Basic length R: Bending radius S: Link pitch

Y-axis stroke (mm)	100	150	200	250	300	350	400	450	500	550	600	650	700	750	800	850	900	950	1000	1050
L	450	500	550	600	650	700	750	800	850	900	950	1000	1050	1100	1150	1200	1250	1300	1350	1400
A	200	50	100	150	200	50	100	150	200	50	100	150	200	50	100	150	200	50	100	150
M	1	2	2	2	2	3	3	3	3	4	4	4	4	5	5	5	5	6	6	6
N	3	4	4	4	4	5	5	5	5	6	6	6	6	7	7	7	7	8	8	8

Electric actuator Ball screw drive Slider

ETS Multi-Axis Series

Combination parts: Axis combination bracket

RoHS

How to order

ETS - 210 A - BKTC 14 - Y 030

Ⓐ Combined axes

210	ETS-06 × ETS-05
430	ETS-12 × ETS-10
440	ETS-12 × ETS-12
530	ETS-13 × ETS-10
640	ETS-14 × ETS-12
650	ETS-14 × ETS-13
760	ETS-17 × ETS-14
870	ETS-22 × ETS-17
880	ETS-22 × ETS-22

Ⓑ Combination

A	X-Y axes
G	X-Y axes with support guide
P	X-Z axes
F	Y-Z axes

Ⓒ Combination direction

00	Parts without combination direction restrictions
13	Combination directions 1/3 dedicated parts
14	Combination directions 1/4 dedicated parts
23	Combination directions 2/3 dedicated parts

Ⓓ Axes related to part specifications

Y	Y-axis
Z	Z-axis

ⒺⒹ Axis stroke

000 to 150	0 mm (In 50 mm increments) 1500 mm

Combination table

Ⓐ Combined axes	Ⓑ Combination	Ⓒ Combination direction (restrictions)	Ⓓ Axes related to part specifications	ⒺⒹ Axis stroke
ETS-210	A	14	Y	50 to 350
		23		
ETS-430	A	14	Y	000
		23		
ETS-440	A	14	Y	000
		23		
ETS-650	A	14	Y	000
		23		
ETS-760	A	14	Y	000
		23		
ETS-870	A	14	Y	000
		23		
ETS-760	G	14	Y	200 to 850
		23		
ETS-870	G	14	Y	200 to 1050
		23		
ETS-650	P	00	Z	000
ETS-760	P	00	Z	000
ETS-880	P	00	Z	000
ETS-530	F	00	Z	000
ETS-640	F	00	Z	000
ETS-760	F	00	Z	000

Bracket dimensions

ETS-210A-BKTC14-Y***

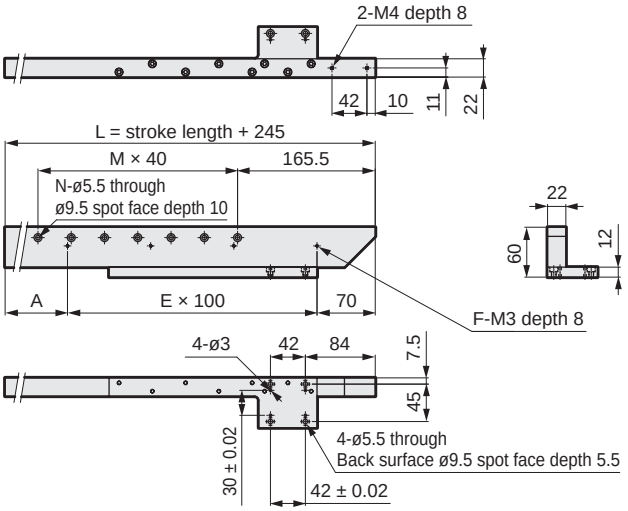

ETS-210A-BKTC23-Y***

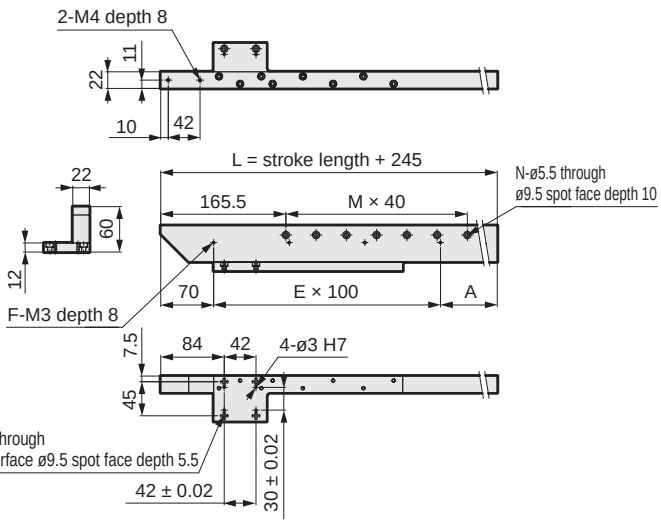

Stroke (mm)	50	100	150	200	250	300	350
L	295	345	395	445	495	545	595
A	25	75	25	75	25	75	25
M	2	4	5	6	7	9	10
N	3	5	6	7	9	10	11
E	2	2	3	3	4	4	5
F	3	3	4	4	5	5	6

ETS-430A-BKTC14-Y000

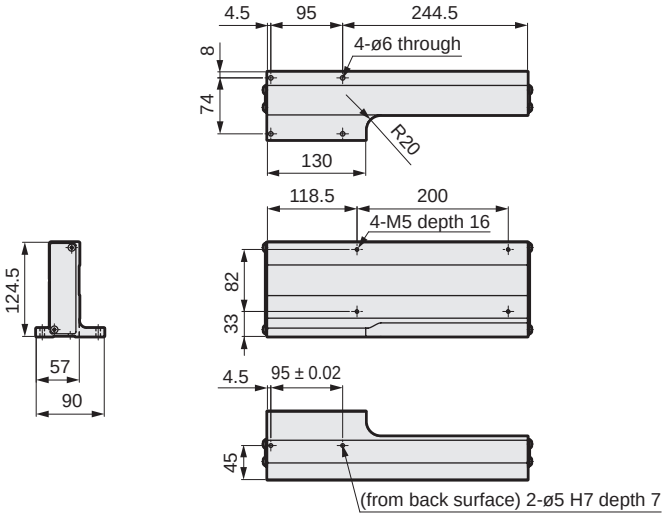

ETS-430A-BKTC23-Y000

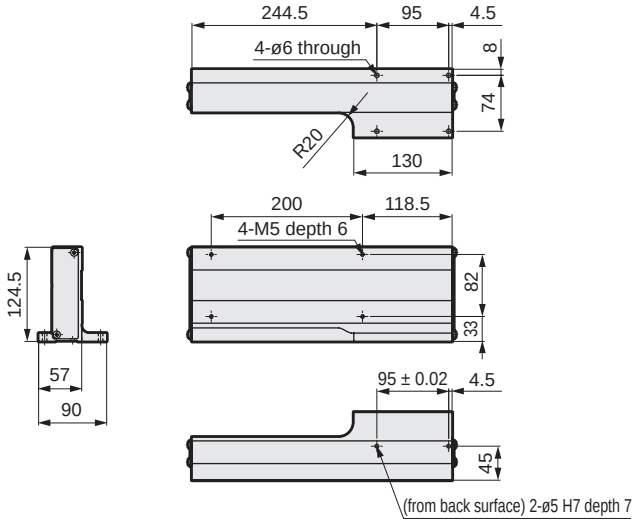

ETS-440A-BKTC14-Y000

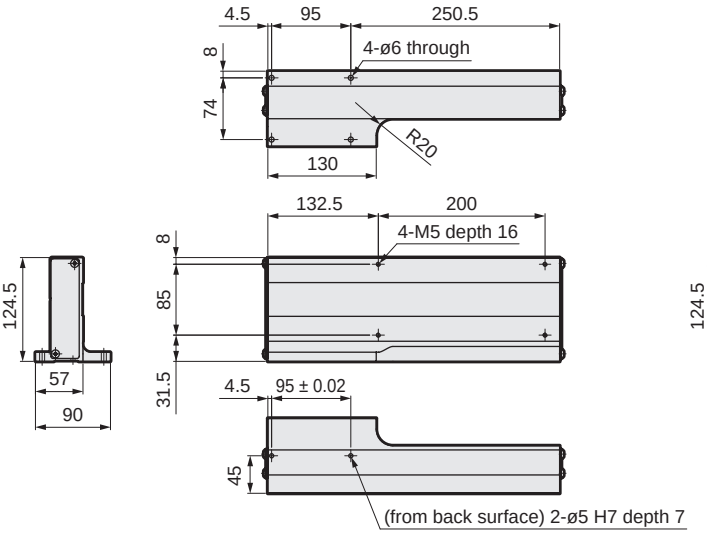

ETS-440A-BKTC23-Y000

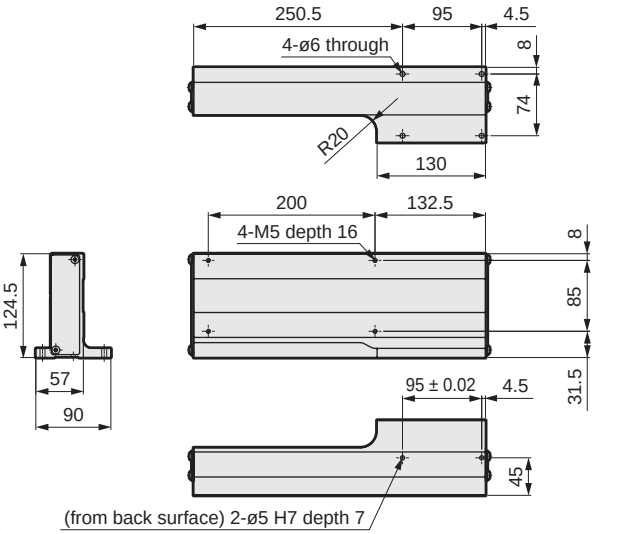

Bracket dimensions

ETS-530F-BKTC00-Z000

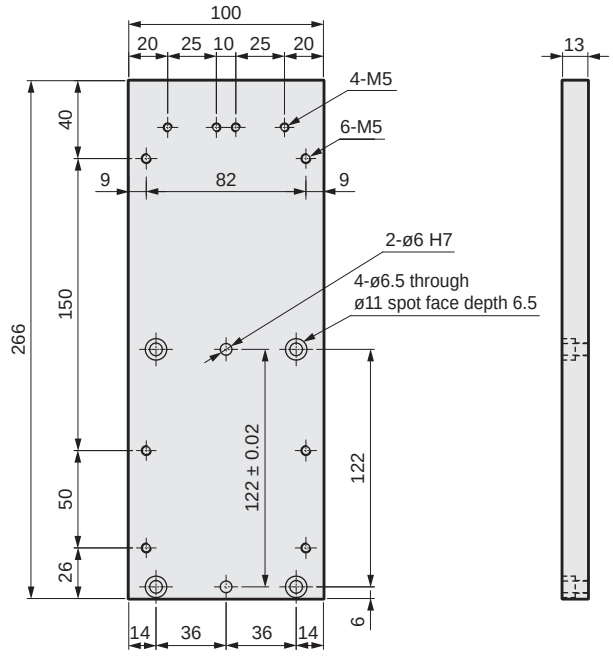

ETS-640F-BKTC00-Z000

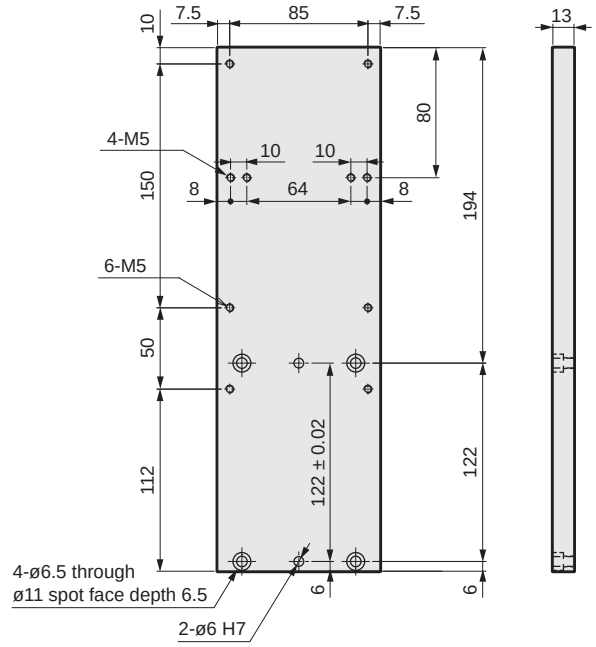

ETS-650A-BKTC14-Y000

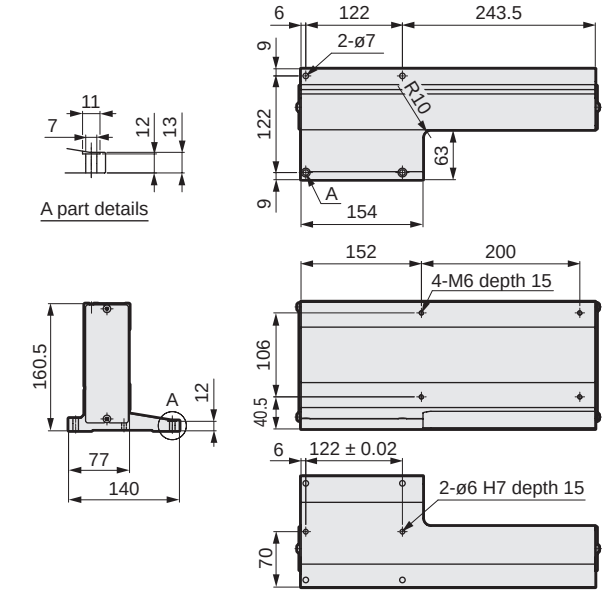

ETS-650A-BKTC23-Y000

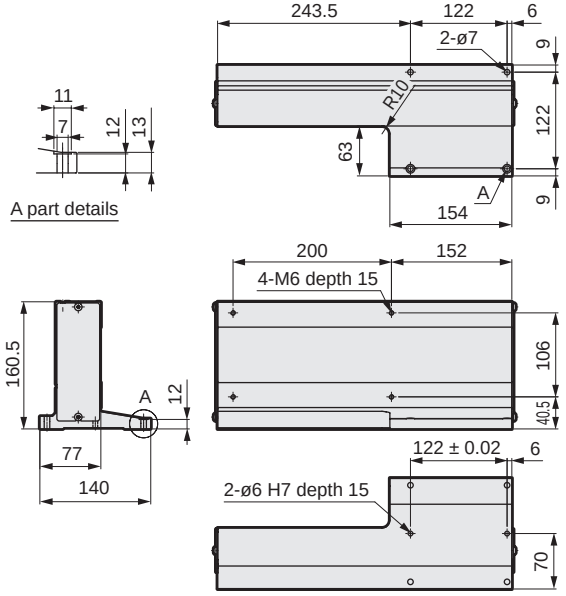

ETS-650P-BKTC00-Z000

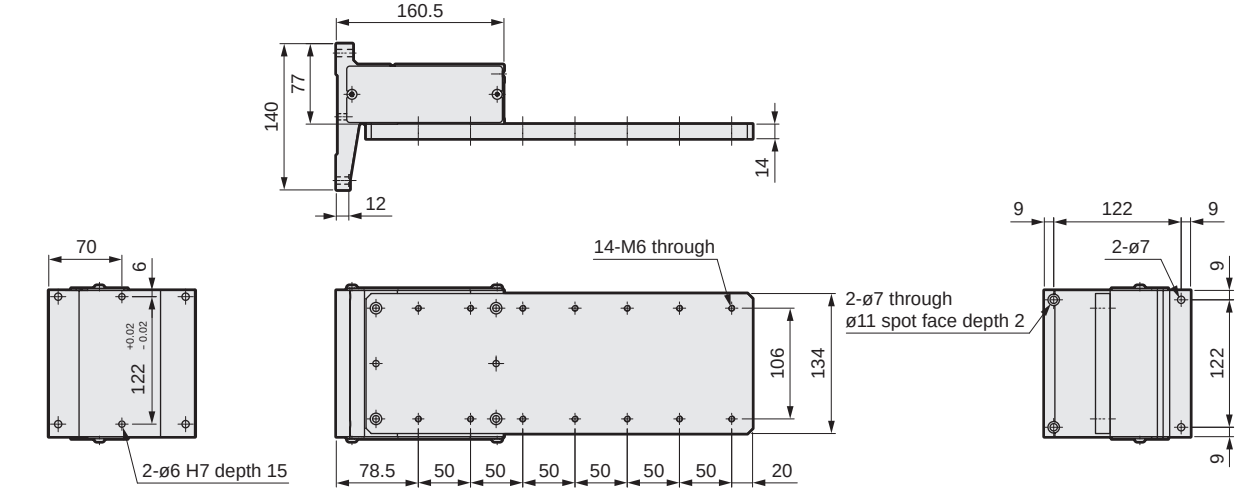

Bracket dimensions

ETS-760A-BKTC14-Y000

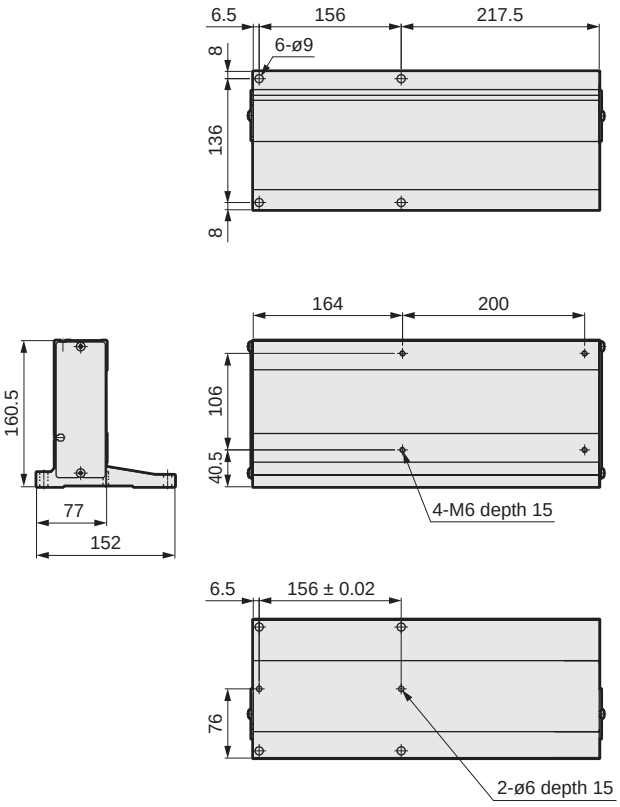

ETS-760A-BKTC23-Y000

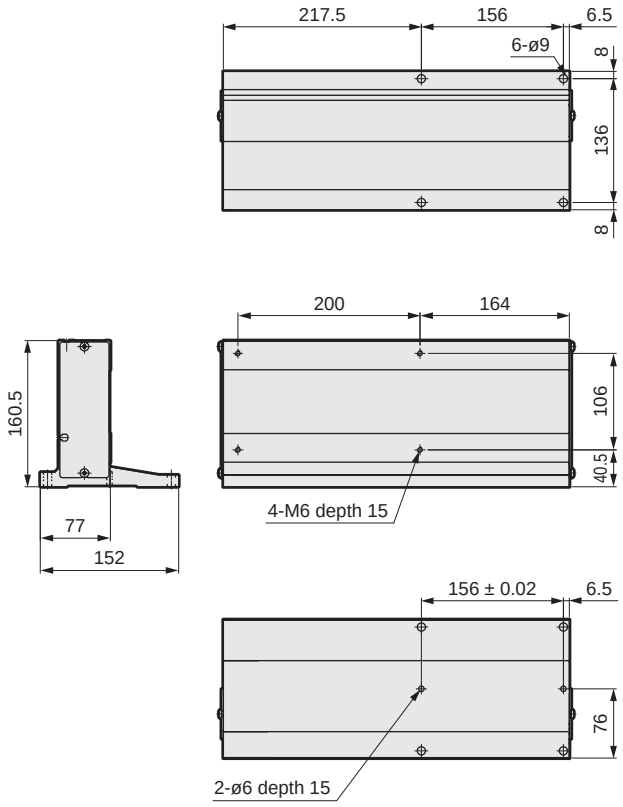

ETS-760G-BKTC14-Y***

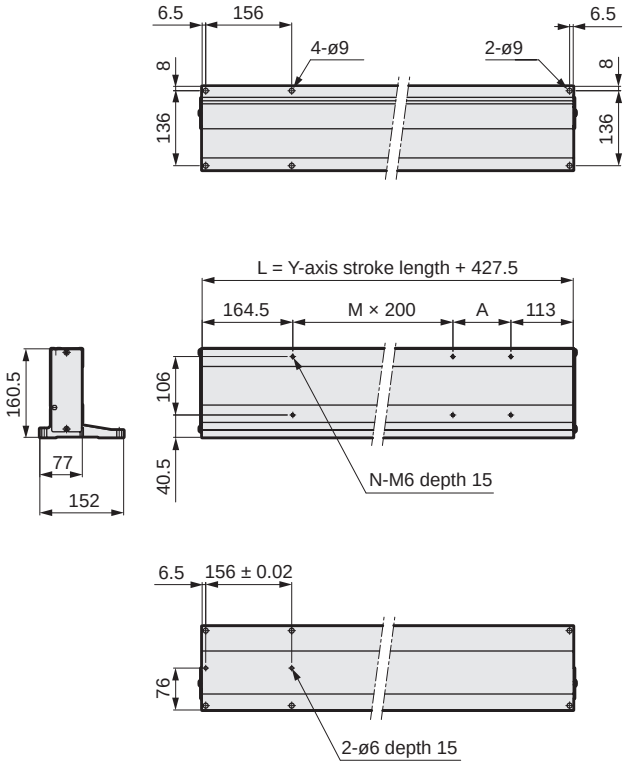

ETS-760G-BKTC23-Y***

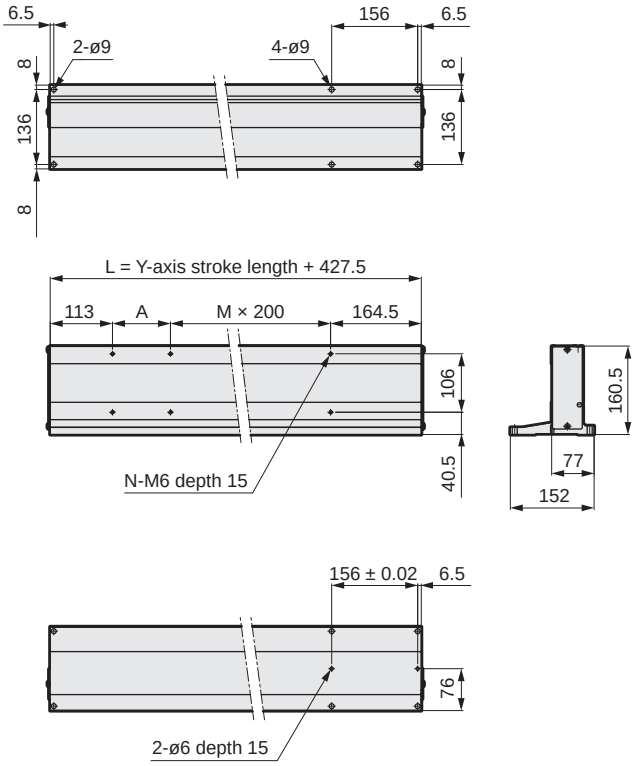

Stroke (mm)	200	250	300	350	400	450	500	550	600	650	700	750	800	850
L	627.5	677.5	727.5	777.5	827.5	877.5	927.5	977.5	1027.5	1077.5	1127.5	1177.5	1227.5	1277.5
A	150	200	50	100	150	200	50	100	150	200	50	100	150	200
M	1	1	2	2	2	2	3	3	3	3	4	4	4	4
N	6	6	8	8	8	8	10	10	10	10	12	12	12	12

Bracket dimensions

ETS-760F-BKTC00-Z000

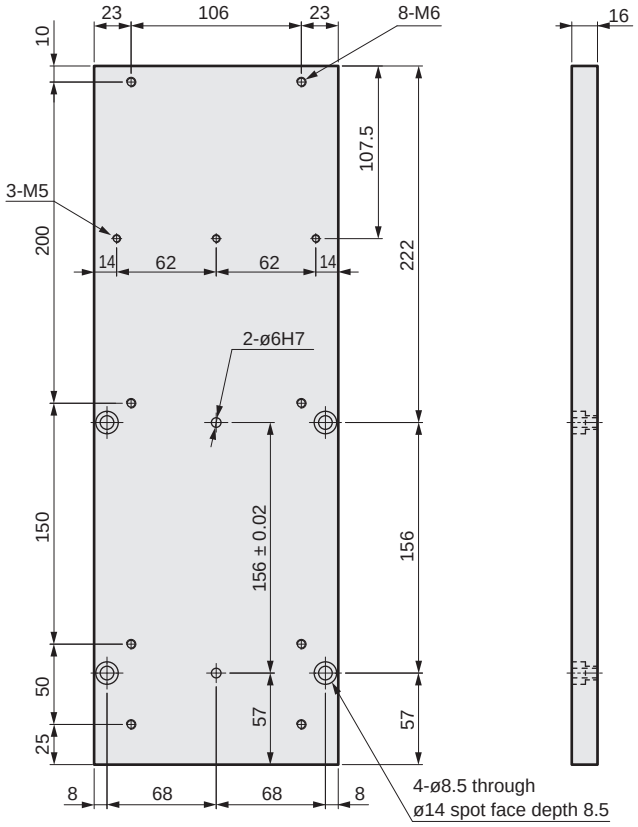

ETS-760P-BKTC00-Z000

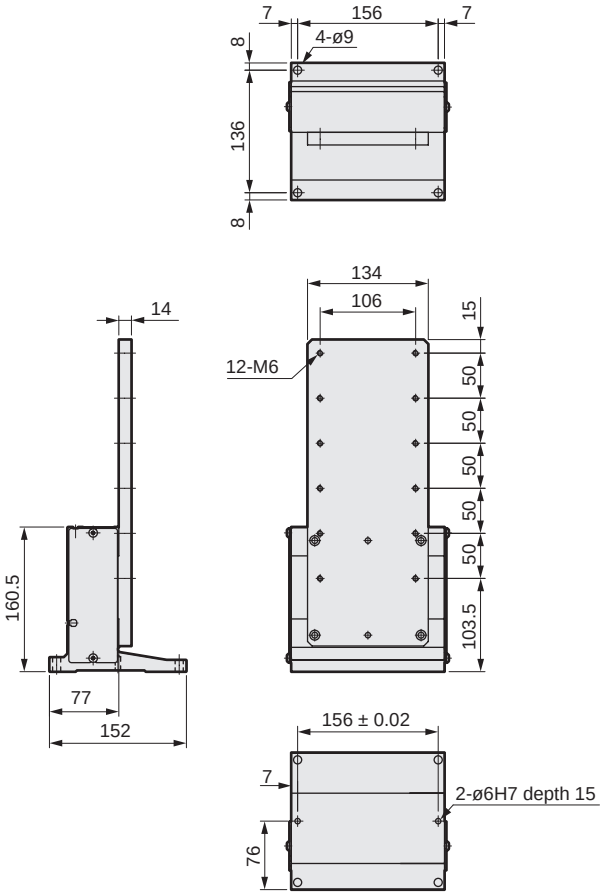

ETS-870A-BKTC14-Y000

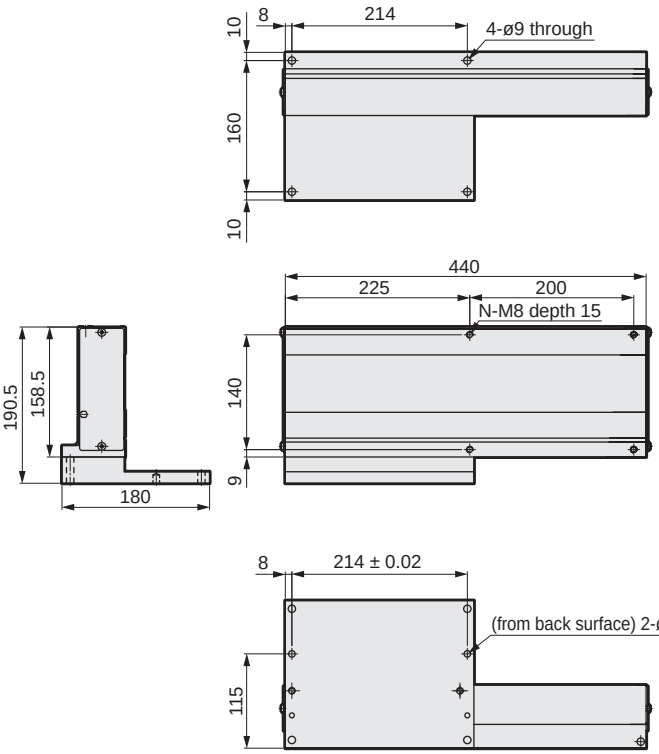

ETS-870A-BKTC23-Y000

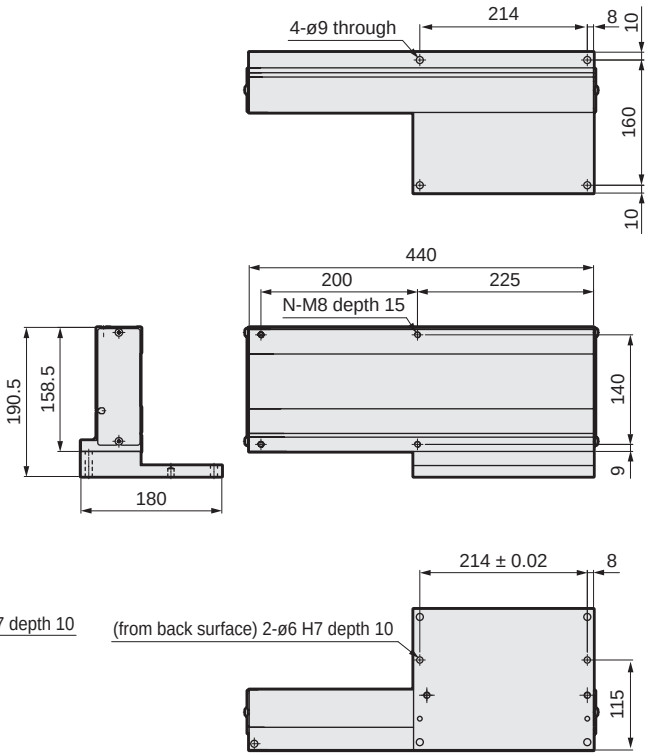

Bracket dimensions

● ETS-870G-BKTC14-Y000

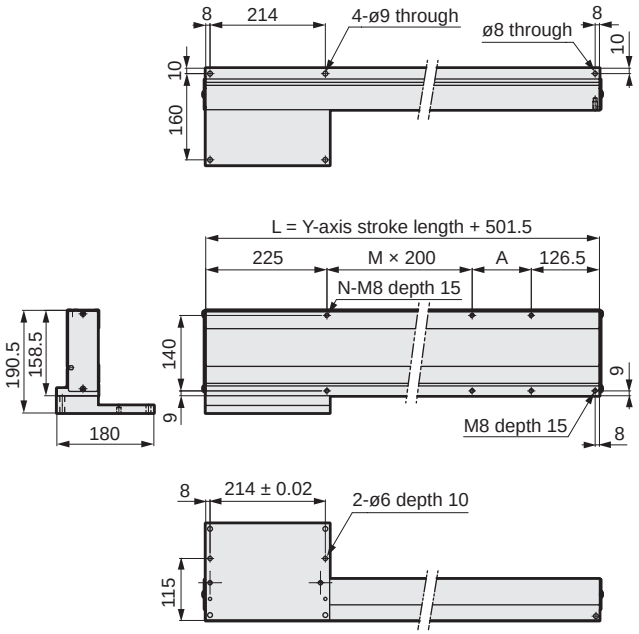

● ETS-870G-BKTC23-Y000

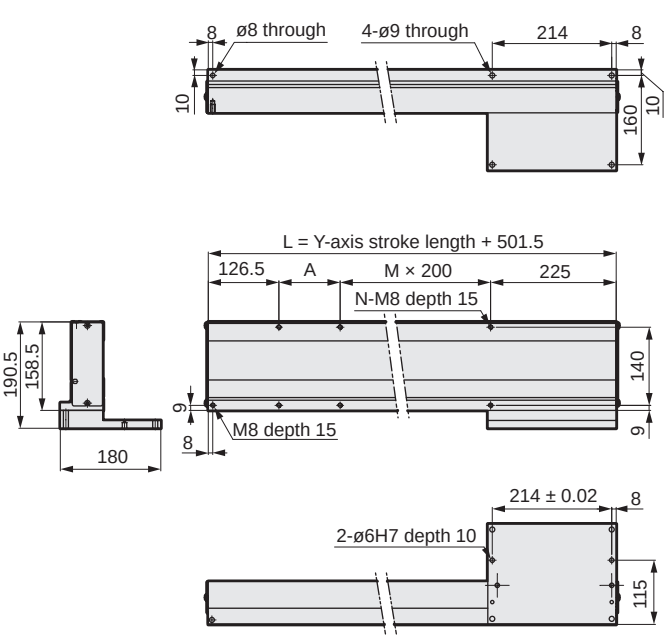

Stroke (mm)	200	250	300	350	400	450	500	550	600	650	700	750	800	850	900	950	1000	1050
L	701.5	751.5	801.5	851.5	901.5	951.5	1001.5	1051.5	1101.5	1151.5	1201.5	1251.5	1301.5	1351.5	1401.5	1451.5	1501.5	1551.5
A	150	200	50	100	150	200	50	100	150	200	50	100	150	200	50	100	150	200
M	1	1	2	2	2	2	3	3	3	3	4	4	4	4	5	5	5	5
N	6	6	8	8	8	8	10	10	10	10	12	12	12	12	14	14	14	14

● ETS-880P-BKTC00-Z000

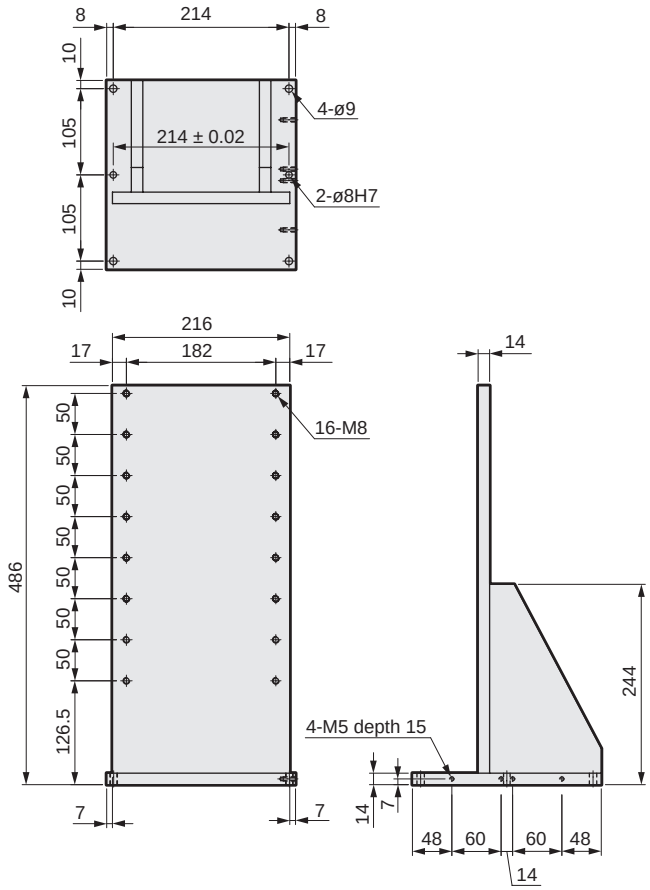

Electric actuator Ball screw drive Slider

ETS Multi-Axis Series

Combination parts: Support guide

How to order

ETS - 760 G - SUPG 00 - X 030

Ⓐ 760: With X-Y support guide (gantry type)

Ⓐ Combined axes

760	ETS-17 × ETS-14
870	ETS-22 × ETS-17

Ⓑ 010 to 150: 100 mm (In 50 mm increments)

Ⓑ 160: 1500 mm

*1: Select the support guide stroke length from the 1st axis stroke range of the combined axes. (See the various size specifications pages for the axis stroke ranges.)

■ Support guide bracket

ETS - 760 G - SBKT 00 - X 000

Ⓐ Combined axes

760	ETS-17 × ETS-14
870	ETS-22 × ETS-17

Support guide dimensions

● ETS-760G-SUPG00-X***

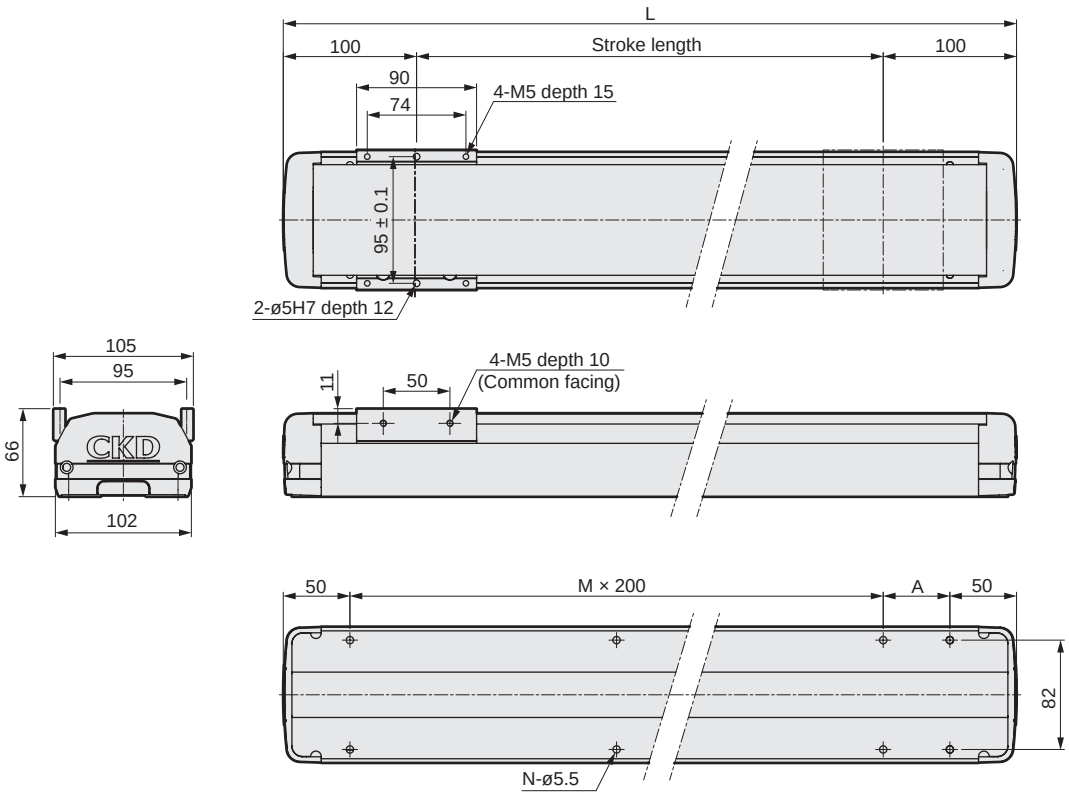

Stroke (mm)	100	150	200	250	300	350	400	450	500	550	600	650	700	750	800	850	900	950	1000	1050	1100	1150	1200	1250
L	300	350	400	450	500	550	600	650	700	750	800	850	900	950	1000	1050	1100	1150	1200	1250	1300	1350	1400	1450
A	200	50	100	150	200	50	100	150	200	50	100	150	200	50	100	150	200	50	100	150	200	50	100	150
M	0	1	1	1	1	2	2	2	2	3	3	3	3	4	4	4	4	5	5	5	5	6	6	6
N	4	6	6	6	6	8	8	8	8	10	10	10	10	12	12	12	12	14	14	14	14	16	16	16

Support guide dimensions

● ETS-870G-SUPG00-X***

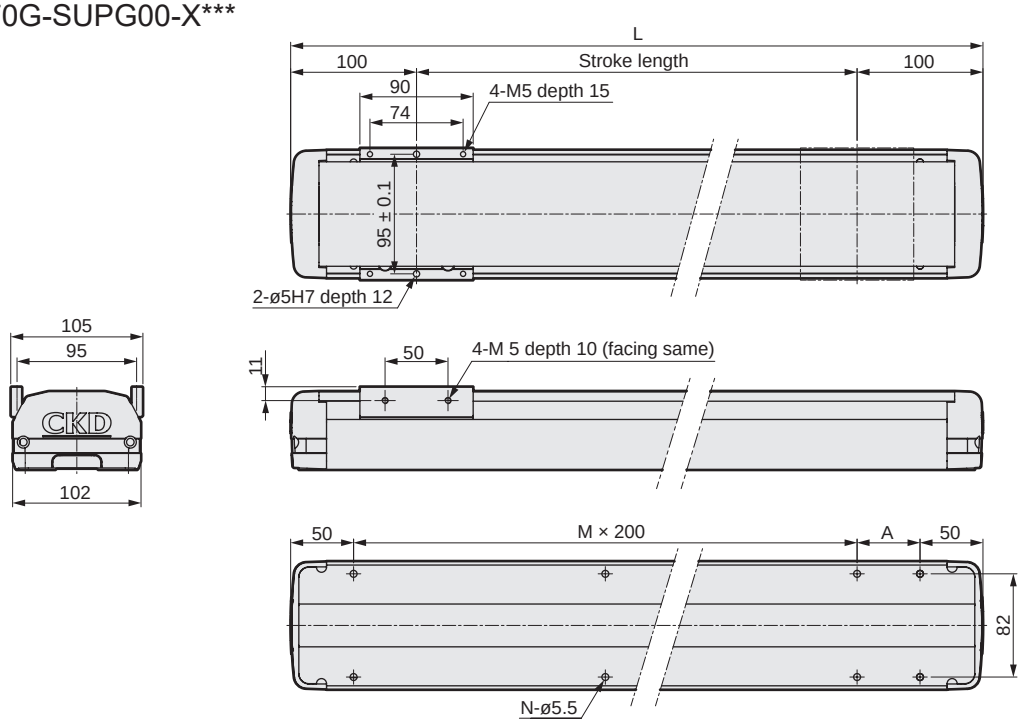

Stroke (mm)	100	150	200	250	300	350	400	450	500	550	600	650	700	750	800	850	900	950	1000
L	300	350	400	450	500	550	600	650	700	750	800	850	900	950	1000	1050	1100	1150	1200
A	200	50	100	150	200	50	100	150	200	50	100	150	200	50	100	150	200	50	100
M	0	1	1	1	1	2	2	2	2	3	3	3	3	4	4	4	4	5	5
N	4	6	6	6	6	8	8	8	8	10	10	10	10	12	12	12	12	14	14

Stroke (mm)	1050	1100	1150	1200	1250	1300	1350	1400	1450	1500
L	1250	1300	1350	1400	1450	1500	1550	1600	1650	1700
A	150	200	50	100	150	200	50	100	150	200
M	5	5	6	6	6	6	7	7	7	7
N	14	14	16	16	16	16	18	18	18	18

Support guide bracket dimensions

● ETS-760G-SBKT00-X000

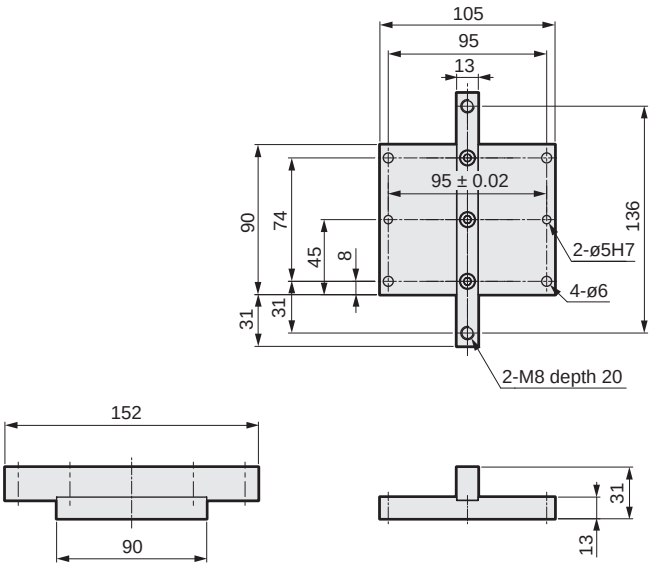

● ETS-870G-SBKT00-X000

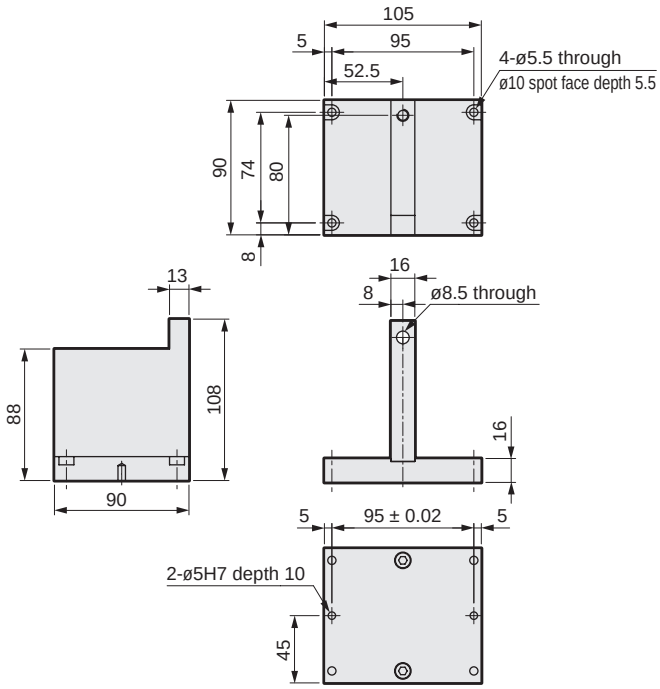

ECS

Slider (ball screw drive low dust specifications)

Servo motor compatible electric actuator
Motorless specification

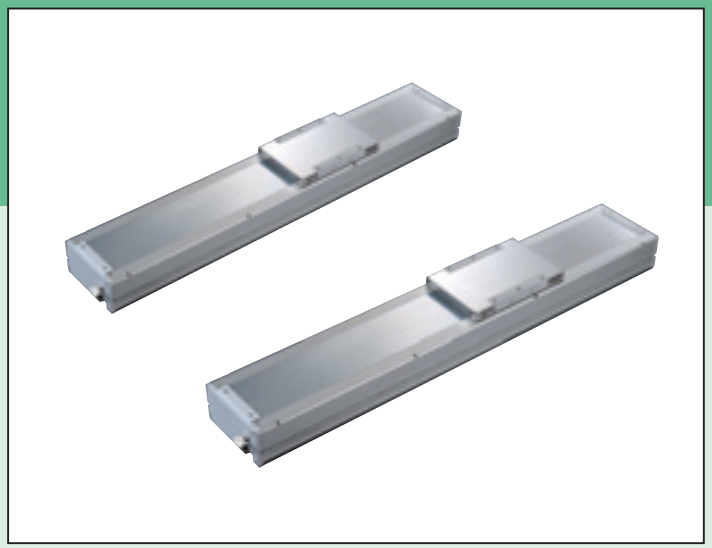

CONTENTS

Product introduction	Intro Pages
Series variation	272
● Specifications/How to order/Dimensions	
· ECS-05	276
· ECS-06	282
· ECS-10	288
· ECS-12	296
· ECS-14	304
· ECS-17	312
· ECS-22	320
● Model selection	328
● Technical data	330
⚠ Safety precautions	686
Model Selection Check Sheet	708

Series variation

Type	Model No.		Applicable motor capacity (W)	Body width (mm)	Screw lead (mm)	Max. load capacity (kg) Horizontal *1	Max. load capacity (kg) Vertical	Stroke length (mm) and max. speed (mm/s) *2	Page
Low dust generation type		ECS-05-M	100	51	2	10	7	50–400: 100mm/s; 450: 90; 500: 80; 550: 70; 600: 60; 650: ⏱13.53 sec.*3	276
					5	10	3	50–400: 250; 450: 225; 500: 200; 550: 175; 600: 150; 650: ⏱5.53 sec.	
					10	5	1.5	50–400: 500; 450: 450; 500: 400; 550: 350; 600: 300; 650: ⏱2.87 sec.	
		ECS-06-M	100	65	2	30	15	50–400: 100; 450: 90; 500: 80; 550: 70; 600: 60; 650: ⏱13.53 sec.	282
					5	30	10	50–400: 250; 450: 225; 500: 200; 550: 175; 600: 150; 650: ⏱5.53 sec.	
					10	15	5	50–400: 500; 450: 450; 500: 400; 550: 350; 600: 300; 650: ⏱2.87 sec.	
		ECS-10	100	102	5	50	12	50–400: 250; 450: 225; 500: 200; 550: 175; 600: 150; 650: 125; ⏱8.6 sec.	288
					10	30	8	50–400: 500; 450: 450; 500: 400; 550: 350; 600: 300; 650: 250; ⏱4.4 sec.	
					16	22	5	50–400: 800; 450: 720; 500: 640; 550: 560; 600: 480; 650: 400; ⏱2.83 sec.	
					20	18	3	50–400: 1000; 450: 900; 500: 800; 550: 700; 600: 600; 650: 500; ⏱2.3 sec.	
		ECS-12	100	102	5	50	12	50–400: 250; 450: 225; 500: 200; 550: 175; 600: 150; 650: 125; ⏱8.6 sec.	296
					10	30	8	50–400: 500; 450: 450; 500: 400; 550: 350; 600: 300; 650: 250; ⏱4.4 sec.	
					16	22	5	50–400: 800; 450: 720; 500: 640; 550: 560; 600: 480; 650: 400; ⏱2.83 sec.	
					20	18	3	50–400: 1000; 450: 900; 500: 800; 550: 700; 600: 600; 650: 500; ⏱2.3 sec.	
		ECS-14	200	135	5	95	27	50–400: 250; 450: 225; 500: 200; 550: 175; 600: 150; 650: 125; ⏱8.6 sec.	304
					10	75	18	50–400: 500; 450: 450; 500: 400; 550: 350; 600: 300; 650: 250; ⏱4.4 sec.	
					16	44	7	50–400: 800; 450: 720; 500: 640; 550: 560; 600: 480; 650: 400; ⏱2.83 sec.	
					20	35	6	50–400: 1000; 450: 900; 500: 800; 550: 700; 600: 600; 650: 500; ⏱2.3 sec.	
			400	135	5	110	33	50–400: 250; 450: 225; 500: 200; 550: 175; 600: 150; 650: 125; ⏱8.6 sec.	
					10	88	22	50–400: 500; 450: 450; 500: 400; 550: 350; 600: 300; 650: 250; ⏱4.4 sec.	
					16	48	10	50–400: 800; 450: 720; 500: 640; 550: 560; 600: 480; 650: 400; ⏱2.83 sec.	
					20	40	8	50–400: 1000; 450: 900; 500: 800; 550: 700; 600: 600; 650: 500; ⏱2.3 sec.	
		ECS-17	400	170	5	120	40	50–250: 250; 300: 225; 350: 200; 400: 175; 450: 150; ⏱8.53 sec.	312
					10	110	30	50–250: 500; 300: 450; 350: 400; 400: 350; 450: 300; ⏱4.37 sec.	
					20	75	14	50–250: 1000; 300: 900; 350: 800; 400: 700; 450: 600; ⏱2.28 sec.	
					40	35	5	50–250: 2000; 300: 1800; 350: 1600; 400: 1400; 450: 1200; ⏱1.24 sec.	
			750	170	5	120	50	50–250: 250; 300: 225; 350: 200; 400: 175; 450: 150; ⏱8.53 sec.	
					10	120	40	50–250: 500; 300: 450; 350: 400; 400: 350; 450: 300; ⏱4.37 sec.	
					20	83	25	50–250: 1000; 300: 900; 350: 800; 400: 700; 450: 600; ⏱2.28 sec.	
					40	50	10	50–250: 2000; 300: 1800; 350: 1600; 400: 1400; 450: 1200; ⏱1.24 sec.	
		ECS-22	750	220	5	150	55	50–200: 250; 225: 225; 250: 200; 300: 175; 350: 150; 400: 125; 450: 100; ⏱15.2 sec.	320
					10	150	45	50–200: 500; 225: 450; 250: 400; 300: 350; 350: 300; 400: 250; 450: 200; ⏱7.7 sec.	
					25	120	20	50–200: 1250; 225: 1125; 250: 1000; 300: 875; 350: 750; 400: 625; 450: 500; ⏱3.2 sec.	
					40	60	10	50–200: 2000; 225: 1800; 250: 1600; 300: 1400; 350: 1200; 400: 1000; 450: 800; 500: 600; ⏱2.7 sec.	

*1: The load capacity when wall mounted is the same as for horizontal installation.
*2: The max. speed is the speed when the motor mounted by the customer can output a rotation speed of 3000 rpm.
The max. speed is restricted by the stroke. Do not move at speeds beyond the limit.
*3: ⏱ shows the positioning time. Maximum stroke when installed horizontally and operated at max. speed and max. acceleration/deceleration.
Note that this is not the value at maximum load capacity.

How to order

How to order

ECS - 06 - 05 040 - E M 1 N C B D P - M

(A) (B) (C) (D) (E) (F) (G) (H) (I) (J) (K) (L)

(A) Body size	
05	Body width 51 mm
06	Body width 65 mm
10	Body width 102 mm
12	Body width 102 mm
14	Body width 135 mm
17	Body width 170 mm
22	Body width 220 mm

(B) Screw lead	
02	2 mm
05	5 mm
10	10 mm
16	16 mm
20	20 mm
25	25 mm
40	40 mm

(C) Stroke length	
005 to 150	50 mm (In 50 mm increments) 1500 mm

(D) Motor mounting direction *1	
E	Straight mounting
B	Built-in mounting
R	Right mounting
D	Bottom mounting
L	Left mounting

(E) Mounted motor specification	
M Y P F	Refer to the list on the page at right

(F) Motor capacity	
1	100 W
2	200 W
4	400 W
8	750 W

(G) Brake *1	
N	None
B	Yes

(H) Origin sensor (1 pc) *2	
N	None
A	Inside motor side
B	Inside motor opposite side
C	Outside motor side (Included at shipment)
D	Outside motor opposite side (Included at shipment)

(I) Limit sensor (2 pcs) *2	
N	None
A	Inside
B	Outside

(J) Grease nipple	
N	None (Body mounting direction: Standard)
R	Right
L	Left

(K) Positioning pin hole	
N	None
P	Yes

(L) Magnet slider method *3	
	Standard
M	Yes

*1: Select "Yes" to the Brake only when the motor mounting direction is built-in mounting.
For other mounting directions, select "None."
*2: The sensor dog is assembled at shipment regardless of sensor presence.
*3: ECS-05/06 uses the magnet slider method. Other sizes use the standard.

Manufacturer	50 W	100 W	200 W	400 W	750 W
Mitsubishi Electric Corporation	M	M	M	M	M
Delta Electronics Co., Ltd.	M	M	M	M	M
Sanyo Denki Co., Ltd.	M	M	M	M	-
YASKAWA Electric Corporation	Y	Y	Y	Y	Y
Keyence Corporation	Y	Y	Y	Y	Y
Panasonic Corporation	P	P	P	P	P
OMRON Corporation	M	M	P	P	P
Fuji Electric Co., Ltd.	M	M	M	M	M
FANUC CORPORATION	F	F	F	F	F
Bosch Rexroth AG	P	P	P	P	P
Rockwell Automation, Inc.	M	M	M	M	M
SIEMENS AG	M	M	M	M	M

Example of model No.

ECS-06-05040-EM1NCBDP-M

(A) Body size : 06 Series
(B) Screw lead : 5 mm
(C) Stroke length : 400 mm
(D) Motor mounting direction : Straight
(E) Mounted motor specification : M (refer to the table on the page at right)
(F) Motor capacity : 100 W
(G) Brake : None
(H) Origin sensor : External motor side
(I) Limit sensor : Outside
(J) Grease nipple : None (Body mounting method: Bottom side)
(K) Positioning pin hole : Yes
(L) Magnet slider method : Yes

*This product is composed of an actuator (and motor mounting parts) only; there is no motor attached.
The user must prepare, mount, and adjust the motor and driver.

List of servo motors recommended for mounting

Code	Manufacturer	Series	100 W *3 (ECS-05/06/10/12 Series)
M	Mitsubishi Electric Corporation	MELSERVO J4	HG-KR13
		MELSERVO J5	HK-KT13W
M	Delta Electronics Co., Ltd.	ECMA-C *2	ECMA-C10401
M	Sanyo Corporation, Ltd.	SANMOTION R	R2□A04010
Y	YASKAWA Electric Corporation	Σ-V	SGMJV-01
		Σ-7 *1	SGM7J-01
Y	Keyence Corporation	SV	SV-□010
		SV2 *1	SV2-□010
P	Panasonic Corporation	MINAS A5	MSMD01
		MINAS A6 *1	MSMF01
M	OMRON Corporation	G5	R88M-K10030
		1S *1	R88M-1M10030
M	Fuji Electric Co., Ltd.	ALPHA7 GYS	GYS101D7-□B2□
		ALPHA7 GYB	-
F	FANUC CORPORATION *1	βiS-B	A06B-0112-B1
P	Bosch Rexroth AG	MSM	MSM019B
M	Rockwell Automation, Inc. *1	TLP	TLP-A046-010-DKA□2
	SIEMENS AG *1	1FK2 *6	1FK2102-1AG0

Code	Manufacturer	Series	200 W *3 *4 (ECS-10/12/14 Series)	400 W (ECS-14/17 Series)	750 W *5 (ECS-17/22 Series)
M	Mitsubishi Electric Corporation	MELSERVO J4	HG-KR23	HG-KR43	HG-KR73
		MELSERVO J5	HK-KT23W	HK-KT43W	HK-KT7M3W
M	Delta Electronics Co., Ltd.	ECMA-C *2	ECMA-C10602	ECMA-C10604	ECMA-C10807
M	Sanyo Corporation, Ltd.	SANMOTION R	R2□A06020	R2□A06040	-
Y	YASKAWA Electric Corporation	Σ-V	SGMJV-02	SGMJV-04	SGMJV-08
		Σ-7 *1	SGM7J-02	SGM7J-04	SGM7J-08
Y	Keyence Corporation	SV	SV-□020	SV-□040	SV-□075
		SV2 *1	SV2-□020	SV2-□040	SV2-□075
P	Panasonic Corporation	MINAS A5	MSMD02	MSMD04	MSMD08
		MINAS A6 *1	MSMF02	MSMF04	MSMF08
P	OMRON Corporation	G5	R88M-K20030	R88M-K40030	R88M-K75030
		1S *1	R88M-1M20030	R88M-1M40030	R88M-1M75030
M	Fuji Electric Co., Ltd.	ALPHA7 GYS	GYS201D7-□B2□	GYS401D7-□B2□	GYS751D7-□B2□
		ALPHA7 GYB	GYB201D7-□B2□	GYB401D7-□B2□	GYB751D7-□B2□
F	FANUC CORPORATION *1	βiS-B	A06B-2115-B1	A06B-2116-B1	A06B-2063-B1
P	Bosch Rexroth AG	MSM	MSM031B	MSM031C	MSM041B
M	Rockwell Automation, Inc. *1	TLP	TLP-A070-020-DKA□2	TLP-A070-040-DKA□2	TLP-A090-075-DKA□2
M	SIEMENS AG *1	1FK2 *6	1FK2203-2AG0	1FK2203-4AG0	1FK2204-5AK0

* Contact CKD for mounting other than the above motors and products of other motor manufacturers.
*1: Cannot be used with built-in mounting.
*2: ECMA series (with brake) cannot be used with built-in mounting.
*3: Contact CKD when using an OMRON motor with ECS-12 built-in mounting.
*4: ECS-10 and 12 200 W cannot be used with built-in mounting.
*5: ECS-17 750 W cannot be used with built-in mounting.
*6: The servo motor is subject to the regulations of Export Trade Control Order Appendix Table 1 Item 7 (8), and is applicable with regard to its specifications. (as of January 2021)

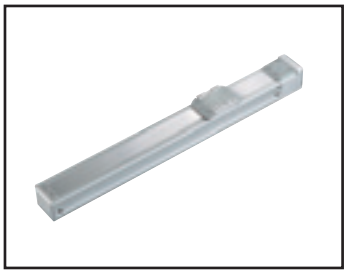

Electric actuator Ball screw drive Slider Low dust specification

ECS-05 Series

Straight motor mounting

● Servo motor capacity: 100 W

How to order

ECS - 05 - 05 040 - E M 1 N C B N P - M

Ⓐ Body size

05	Body width 51 mm

Ⓑ Screw lead

02	2 mm
05	5 mm
10	10 mm

Ⓒ Stroke length

005 to 080	50 mm (In 50 mm increments) 800 mm

Ⓓ Motor mounting direction

E	Straight mounting

Ⓔ Mounted motor specification

M, Y, P, F	Select the mounted motor specification from the table below.

Ⓕ Motor capacity

1	100 W

Ⓖ Brake

N	None

Ⓗ Origin sensor (1 pc) *1 *2

N	None
C	Outside motor side
D	Outside motor opposite side

Ⓘ Limit sensor (2 pcs) *1 *2

N	None
B	Outside

Ⓙ Grease nipple *3

N	None (Body mounting direction: Standard)

Ⓚ Positioning pin hole

N	None
P	Yes

Ⓛ Magnet slider method

M	Yes

Manufacturer	100 W
Mitsubishi Electric Corporation	M
Delta Electronics Co., Ltd.	M
Sanyo Denki Co., Ltd.	M
YASKAWA Electric Corporation	Y
Keyence Corporation	Y
Panasonic Corporation	P
OMRON Corporation	M
Fuji Electric Co., Ltd.	M
FANUC CORPORATION	F
Bosch Rexroth AG	P
Rockwell Automation, Inc.	M
SIEMENS AG	M

*Refer to page 275 for the motor model No.

*1: Origin sensor and limit sensor are available as a set. As it is both-or-nothing, select "None" for both.
*2: The user can adjust the sensor position. (Included at shipment)
*3: "Body mounting direction: Standard" here refers to mounting from the bottom side.

Specifications

Applicable motor capacity		100 W servo motor		
Drive method		Ball screw ø12		
Ball screw accuracy grade		C7		
Stroke length	mm	50 to 800		
Screw lead	mm	2	5	10
Max. load capacity *1	Horizontal kg	10	10	5
	Vertical kg	7	3	1.5
Max. speed	mm/s	100	250	500
Rated thrust *1	N	825	330	165
Repeatability	mm	±0.01		
Lost motion	mm	0.1 or less		
Dynamic allowable load	N	551		
Static allowable moment	N·m	MP: 20, MY: 16, MR: 19		
Dynamic allowable moment	N·m	MP: 2.8, MY: 2.8, MR: 6.8		
Operating ambient temperature, humidity		0 to 40 °C (no freezing) 35 to 80% RH (no condensation)		
Storage ambient temperature, humidity		-10 to 50°C (no freezing) 35 to 80% RH (no condensation)		
Atmosphere		No corrosive gas, explosive gas, or dust		

*1 Rated thrust and max. load capacity are guideline values assuming that the motor mounted will output the rated torque.

Stroke and max. speed

(mm)

Stroke length / Screw lead	100 to 600	650	700	750	800
2	100	90	80	70	60
5	250	225	200	175	150
10	500	450	400	350	300

*The max. speed is the speed when the motor mounted by the customer can output a rotation speed of 3000 rpm.
The max. speed is restricted by the stroke. Do not move at speeds beyond the limit.

Allowable overhang length

*Refer to page 330 for details.

Moment direction

MP MY MR

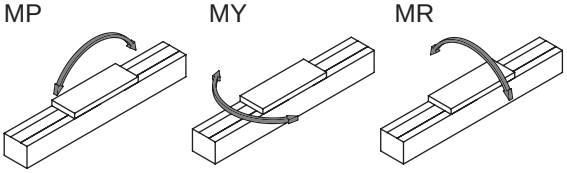

Dimensions Straight motor mounting

● ECS-05-*****-E

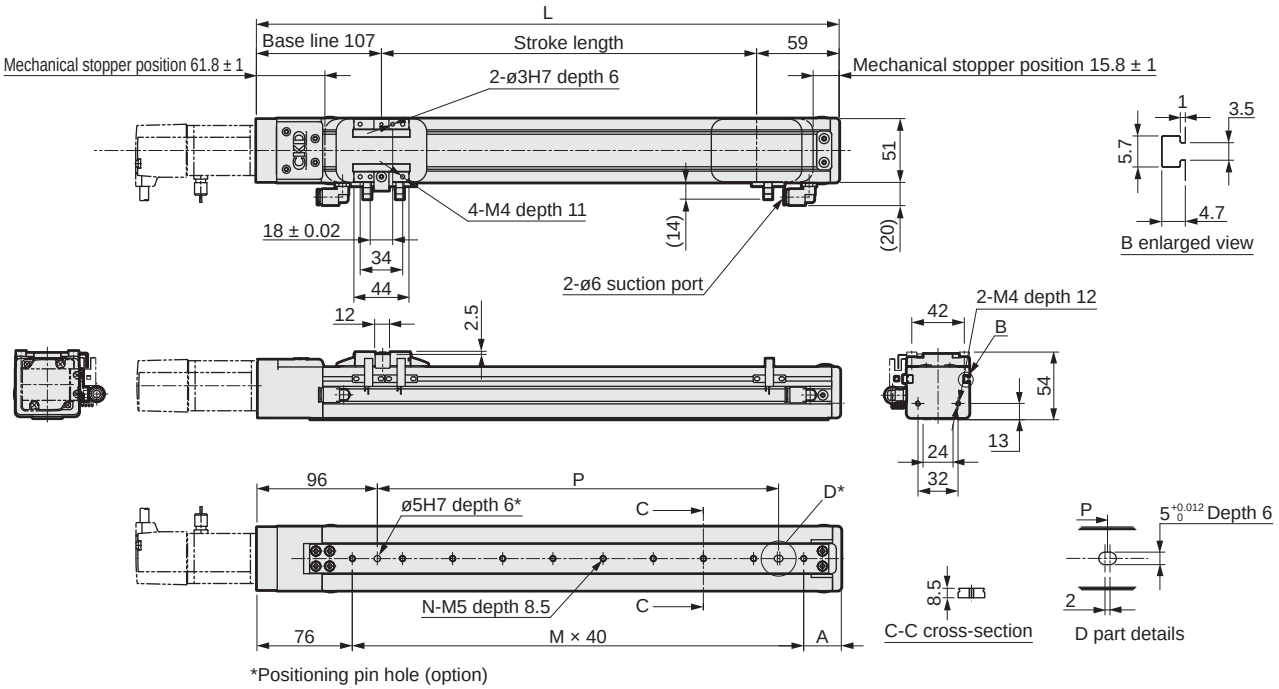

*Positioning pin hole (option)

Stroke length (mm)	50	100	150	200	250	300	350	400	450	500	550	600	650	700	750	800
L	216	266	316	366	416	466	516	566	616	666	716	766	816	866	916	966
A	60	30	40	50	60	30	40	50	60	30	40	50	60	30	40	50
M	2	4	5	6	7	9	10	11	12	14	15	16	17	19	20	21
N	3	5	6	7	8	10	11	12	13	15	16	17	18	20	21	22
P	40	120	160	200	240	320	360	400	440	520	560	600	640	720	760	800
Weight (kg)	1.5	1.7	1.9	2.0	2.2	2.3	2.5	2.6	2.8	2.9	3.1	3.2	3.4	3.5	3.6	3.8

Motor mounting part

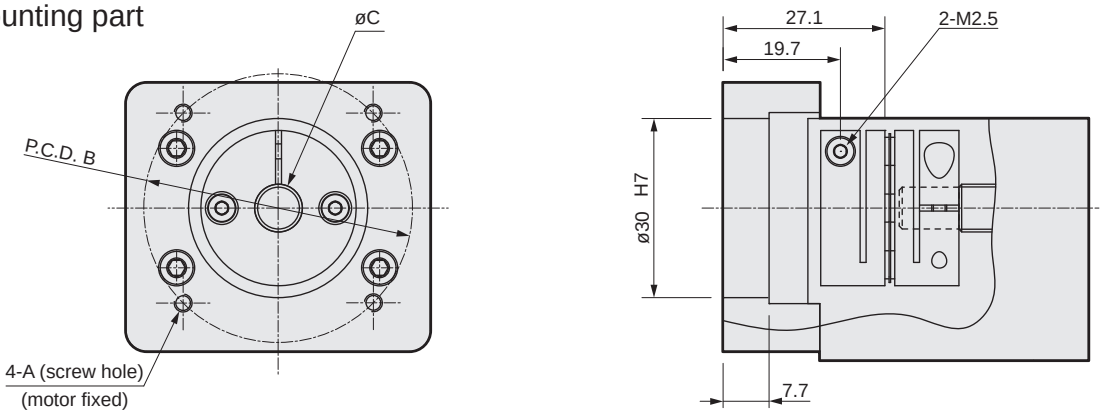

Mounted motor specification		A	B	C	Motor mounting bolt
M	100 W	M4	ø46	ø8	4-M4 × L12
Y	100 W	M4	ø46	ø8	4-M4 × L12
P	100 W	M3	ø45	ø8	4-M3 × L12
F	100 W	M4	ø46	ø8	4-M4 × L12

List of attachments

[Motor mounting parts]

Mounted motor specification	Coupling	Fitting	Motor capacity	Motor mounting bolt	
				Size	Quantity
M	Assembled at shipment	Assembled at shipment	100 W	M4	2
Y				M4	2
P				M3	4
F				M4	2

*Refer to page 338 for fitting details.

[Origin sensor/Limit sensor]

Manufacturer	Model	Quantity
OMRON Corporation	EE-SX672	3

*Refer to page 334 for sensor specifications.



Electric actuator Ball screw drive Slider Low dust specification

ECS-05 Series

Motor side mounting (left, right, bottom)

● Servo motor capacity: 100 W

How to order

ECS - 05 - 05 040 - R M 1 N C B N P - M

(A) (B) (C) (D) (E) (F) (G) (H) (I) (J) (K) (L)

(A) Body size

05	Body width 51 mm

(B) Screw lead

02	2 mm
05	5 mm
10	10 mm

(C) Stroke length

005 to 080	50 mm (In 50 mm increments) 800 mm

(D) Motor mounting direction

R	Right mounting
D	Bottom mounting
L	Left mounting

(E) Mounted motor specification

M Y P F	Select the mounted motor specification from the table below.

(F) Motor capacity

1	100 W

(G) Brake

N	None

(H) Origin sensor (1 pc) *1 *2

N	None
C	Outside motor side
D	Outside motor opposite side

(I) Limit sensor (2 pcs) *1 *2

N	None
B	Outside

(J) Grease nipple *3

N	None (Body mounting direction: Standard)

(K) Positioning pin hole

N	None
P	Yes

(L) Magnet slider method

M	Yes

Manufacturer	100 W
Mitsubishi Electric Corporation	M
Delta Electronics Co., Ltd.	M
Sanyo Denki Co., Ltd.	M
YASKAWA Electric Corporation	Y
Keyence Corporation	Y
Panasonic Corporation	P
OMRON Corporation	M
Fuji Electric Co., Ltd.	M
FANUC CORPORATION	F
Bosch Rexroth AG	P
Rockwell Automation, Inc.	M
SIEMENS AG	M

*Refer to page 275 for the motor model No.

*1: Origin sensor and limit sensor are available as a set. As it is both-or-nothing, select "None" for both.
*2: The user can adjust the sensor position. (Included at shipment)
*3: "Body mounting direction: Standard" here refers to mounting from the bottom side.

Specifications

Applicable motor capacity		100 W servo motor		
Drive method		Ball screw ø12		
Ball screw accuracy grade		C7		
Stroke length	mm	50 to 800		
Screw lead	mm	2	5	10
Max. load capacity *1	Horizontal kg	10	10	5
	Vertical kg	7	3	1.5
Max. speed	mm/s	100	250	500
Rated thrust *1	N	825	330	165
Repeatability	mm	±0.01		
Lost motion	mm	0.1 or less		
Dynamic allowable load	N	551		
Static allowable moment	N·m	MP: 20, MY: 16, MR: 19		
Dynamic allowable moment	N·m	MP: 2.8, MY: 2.8, MR: 6.8		
Operating ambient temperature, humidity		0 to 40°C (no freezing) 35 to 80% RH (no condensation)		
Storage ambient temperature, humidity		-10 to 50°C (no freezing) 35 to 80% RH (no condensation)		
Atmosphere		No corrosive gas, explosive gas, or dust		

*1 Rated thrust and max. load capacity are guideline values assuming that the motor mounted will output the rated torque.

Stroke and max. speed

(mm/s)

Stroke length / Screw lead	100 to 600	650	700	750	800
2	100	90	80	70	60
5	250	225	200	175	150
10	500	450	400	350	300

*The max. speed is the speed when the motor mounted by the customer can output a rotation speed of 3000 rpm.
The max. speed is restricted by the stroke. Do not move at speeds beyond the limit.

Allowable overhang length

*Refer to page 330 for details.

Moment direction

MP MY MR

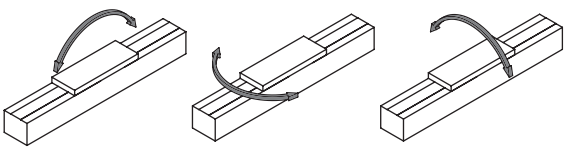

Dimensions Motor right-side mounting

● ECS-05-*****-R

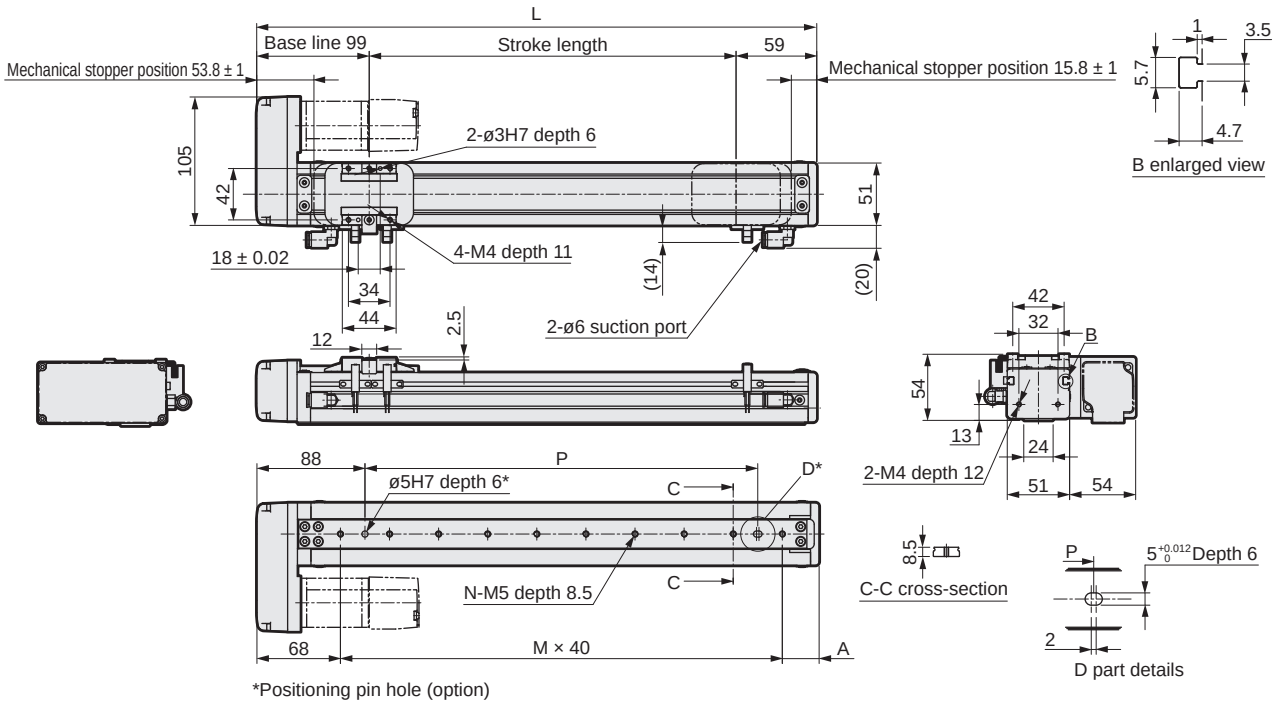

Stroke length (mm)	50	100	150	200	250	300	350	400	450	500	550	600	650	700	750	800
L	208	258	308	358	408	458	508	558	608	658	708	758	808	858	908	958
A	60	30	40	50	60	30	40	50	60	30	40	50	60	30	40	50
M	2	4	5	6	7	9	10	11	12	14	15	16	17	19	20	21
N	3	5	6	7	8	10	11	12	13	15	16	17	18	20	21	22
P	40	120	160	200	240	320	360	400	440	520	560	600	640	720	760	800
Weight (kg)	1.7	1.9	2.0	2.1	2.3	2.4	2.6	2.7	2.9	3.0	3.2	3.3	3.5	3.6	3.7	3.9

Motor mounting part

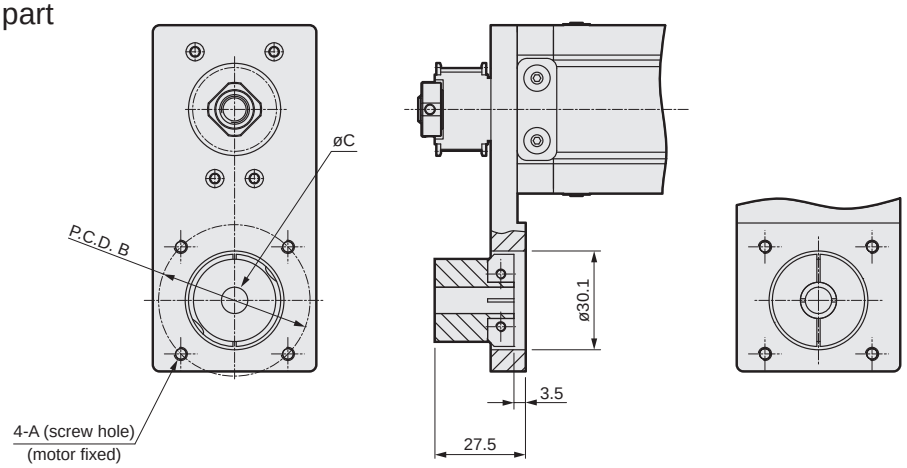

Mounted motor specification		A	B	C	Motor mounting bolt
M	100 W	M4	ø46	ø8	4-M4 × L12
Y	100 W	M4	ø46	ø8	4-M4 × L12
P	100 W	M3	ø45	ø8	4-M3 × L12
F	100 W	M4	ø46	ø8	4-M4 × L12

List of attachments

[Motor mounting parts]

Mounted motor specification	Timing belt, pulley	Fitting	Motor capacity	Motor mounting bolt	
				Size	Quantity
M	Included at shipment	Assembled at shipment	100 W	M4	2
Y				M4	2
P				M3	4
F				M4	2

*Refer to page 338 for fitting details.

[Origin sensor/Limit sensor]

Manufacturer	Model	Quantity
OMRON Corporation	EE-SX672	3

*Refer to page 334 for sensor specifications.

Dimensions Motor bottom mounting

● ECS-05-*****-D

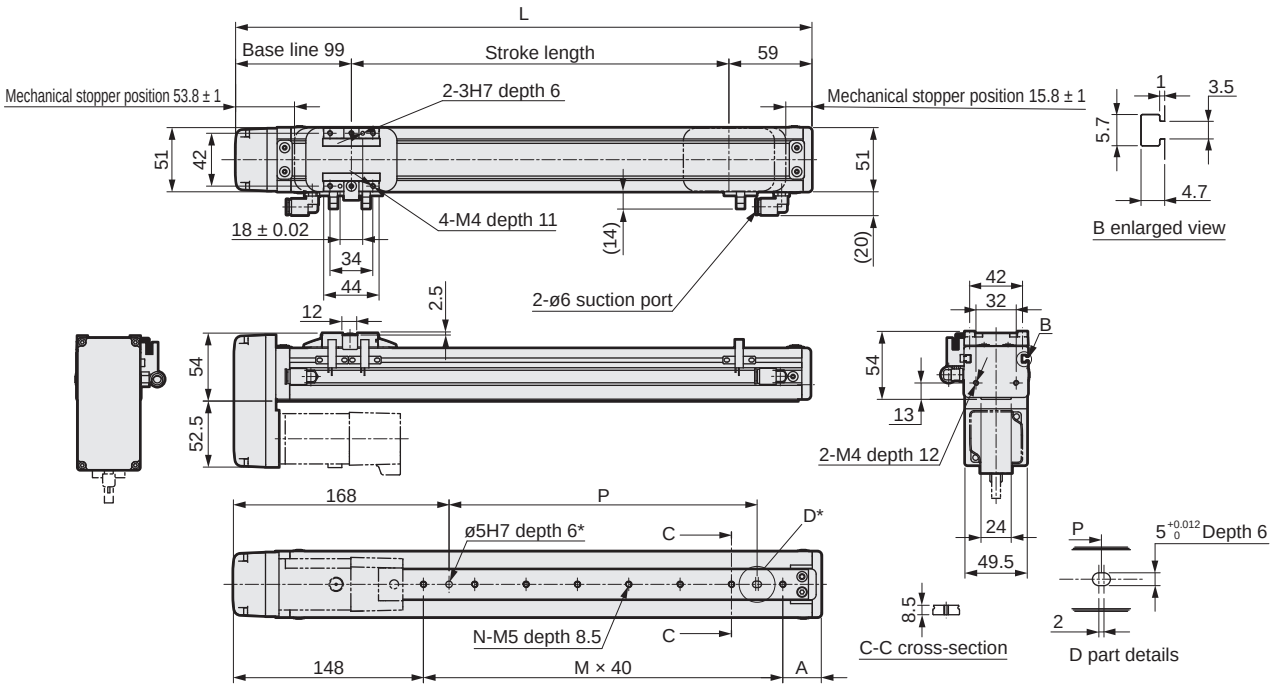

*Positioning pin hole (option)

Stroke length (mm)	50	100	150	200	250	300	350	400	450	500	550	600	650	700	750	800
L	208	258	308	358	408	458	508	558	608	658	708	758	808	858	908	958
A	60	30	40	50	60	30	40	50	60	30	40	50	60	30	40	50
M	0	2	3	4	5	7	8	9	10	12	13	14	15	17	18	19
N	1	3	4	5	6	8	9	10	11	13	14	15	16	18	19	20
P	0	40	80	120	160	240	280	320	360	440	480	520	560	640	680	720
Weight (kg)	1.7	1.9	2.0	2.1	2.3	2.4	2.6	2.7	2.9	3.0	3.2	3.3	3.5	3.6	3.7	3.9

Motor mounting part

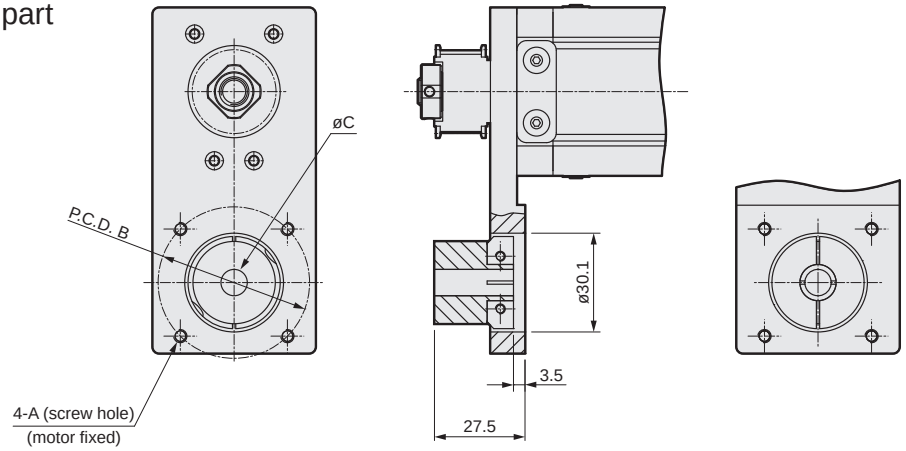

Mounted motor specification		A	B	C	Motor mounting bolt
M	100 W	M4	ø46	ø8	4-M4 × L12
Y	100 W	M4	ø46	ø8	4-M4 × L12
P	100 W	M3	ø45	ø8	4-M3 × L12
F	100 W	M4	ø46	ø8	4-M4 × L12

List of attachments

[Motor mounting parts]

Mounted motor specification	Timing belt, pulley	Fitting	Motor capacity	Motor mounting bolt	
				Size	Quantity
M	Included at shipment	Assembled at shipment	100 W	M4	2
Y				M4	2
P				M3	4
F				M4	2

*Refer to page 338 for fitting details.

[Origin sensor/Limit sensor]

Manufacturer	Model	Quantity
OMRON Corporation	EE-SX672	3

*Refer to page 334 for sensor specifications.

Dimensions Motor left-side mounting

● ECS-05-*****-L

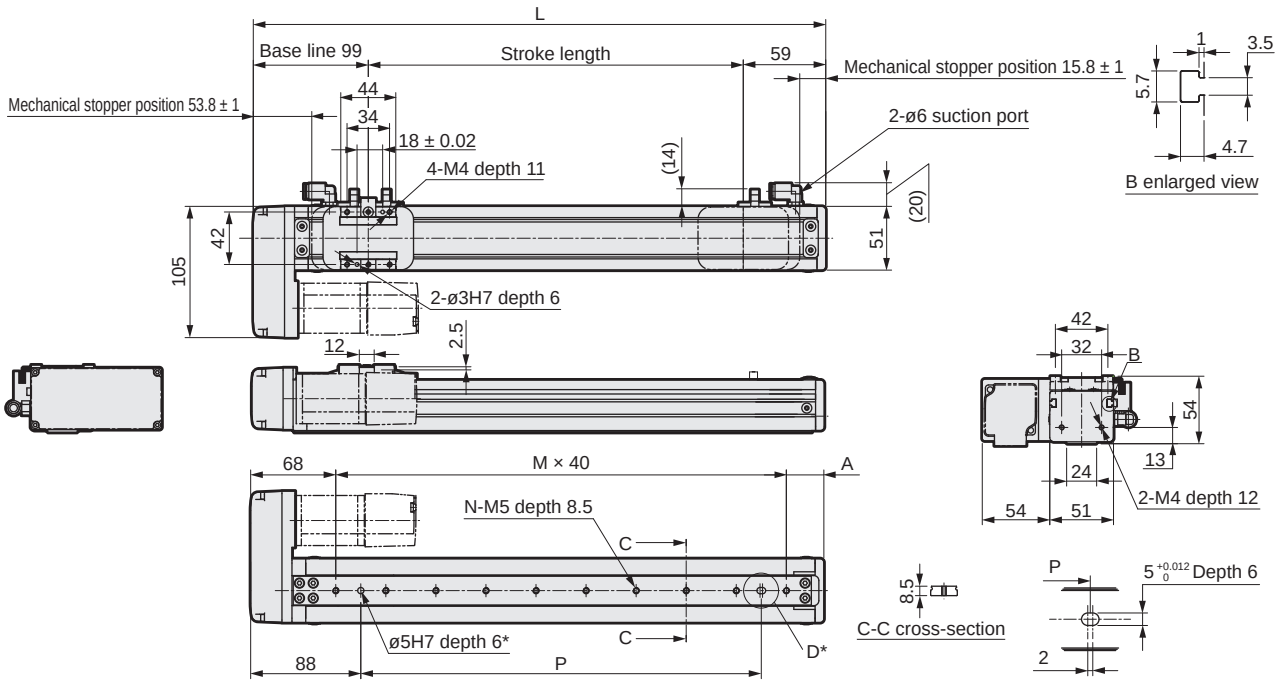

Stroke length (mm)	50	100	150	200	250	300	350	400	450	500	550	600	650	700	750	800
L	208	258	308	358	408	458	508	558	608	658	708	758	808	858	908	958
A	60	30	40	50	60	30	40	50	60	30	40	50	60	30	40	50
M	2	4	5	6	7	9	10	11	12	14	15	16	17	19	20	21
N	3	5	6	7	8	10	11	12	13	15	16	17	18	20	21	22
P	40	120	160	200	240	320	360	400	440	520	560	600	640	720	760	800
Weight (kg)	1.7	1.9	2.0	2.1	2.3	2.4	2.6	2.7	2.9	3.0	3.2	3.3	3.5	3.6	3.7	3.9

Motor mounting part

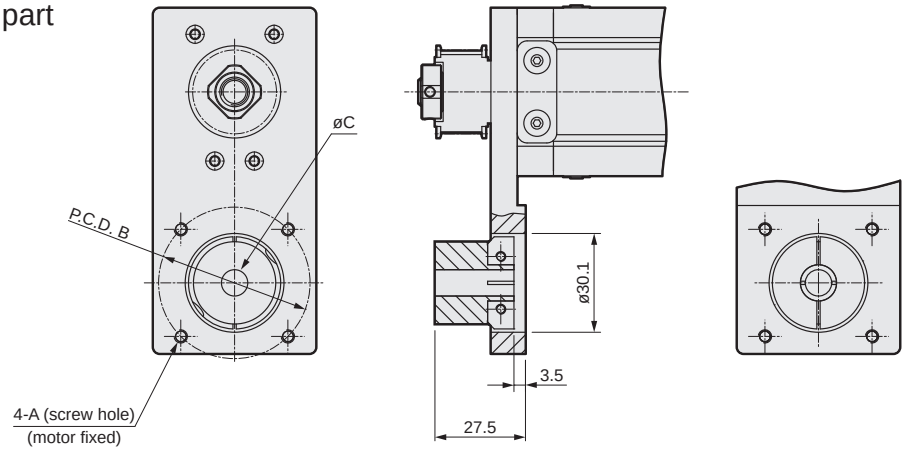

Mounted motor specification		A	B	C	Motor mounting bolt
M	100 W	M4	ø46	ø8	4-M4 × L12
Y	100 W	M4	ø46	ø8	4-M4 × L12
P	100 W	M3	ø45	ø8	4-M3 × L12
F	100 W	M4	ø46	ø8	4-M4 × L12

List of attachments

[Motor mounting parts]

Mounted motor specification	Timing belt, pulley	Fitting	Motor capacity	Motor mounting bolt	
				Size	Quantity
M	Included at shipment	Assembled at shipment	100 W	M4	2
Y				M4	2
P				M3	4
F				M4	2

*Refer to page 338 for fitting details.

[Origin sensor/Limit sensor]

Manufacturer	Model	Quantity
OMRON Corporation	EE-SX672	3

*Refer to page 334 for sensor specifications.

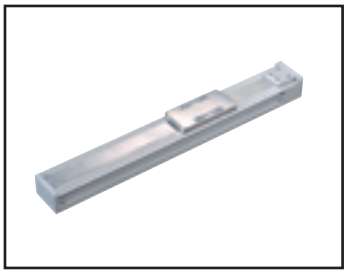

Electric actuator Ball screw drive Slider Low dust specification

ECS-06 Series

Straight motor mounting

● Servo motor capacity: 100 W

How to order

ECS - 06 - 05 - 040 - E M 1 N C B N P - M

(A) (B) (C) (D) (E) (F) (G) (H) (I) (J) (K) (L)

(A) Body size

06	Body width 65 mm

(B) Screw lead

02	2 mm
05	5 mm
10	10 mm

(C) Stroke length

005 to 080	50 mm (In 50 mm increments) 800 mm

(D) Motor mounting direction

E	Straight mounting

(E) Mounted motor specification

M	Select the mounted motor specification from the table below.
Y	
P	
F	

(F) Motor capacity

1	100 W

(G) Brake

N	None

(H) Origin sensor (1 pc) *1 *2

N	None
C	Outside motor side
D	Outside motor opposite side

(I) Limit sensor (2 pcs) *1 *2

N	None
B	Outside

(J) Grease nipple *3

N	None (Body mounting direction: Standard)

(K) Positioning pin hole

N	None
P	Yes

(L) Magnet slider method

M	Yes

Manufacturer	100 W
Mitsubishi Electric Corporation	M
Delta Electronics Co., Ltd.	M
Sanyo Denki Co., Ltd.	M
YASKAWA Electric Corporation	Y
Keyence Corporation	Y
Panasonic Corporation	P
OMRON Corporation	M
Fuji Electric Co., Ltd.	M
FANUC CORPORATION	F
Bosch Rexroth AG	P
Rockwell Automation, Inc.	M
SIEMENS AG	M

*Refer to page 275 for the motor model No.

*1: Origin sensor and limit sensor are available as a set. As it is both-or-nothing, select "None" for both.
*2: The user can adjust the sensor position. (Included at shipment)
*3: "Body mounting direction: Standard" here refers to mounting from the bottom side.

Specifications

Applicable motor capacity		100 W servo motor		
Drive method		Ball screw ø12		
Ball screw accuracy grade		C7		
Stroke length	mm	50 to 800		
Screw lead	mm	2	5	10
Max. load capacity *1	Horizontal kg	30	30	15
	Vertical kg	15	10	5
Max. speed	mm/s	100	250	500
Rated thrust *1	N	854	341	170
Max. speed	mm/s	100	250	500
Repeatability	mm	±0.01		
Lost motion	mm	0.1 or less		
Dynamic allowable load	N	1209		
Static allowable moment	N·m	MP: 80, MY: 70, MR: 75		
Dynamic allowable moment	N·m	MP: 8.9, MY: 8.9, MR: 24.8		
Operating ambient temperature, humidity		0 to 40°C (no freezing) 35 to 80% RH (no condensation)		
Storage ambient temperature, humidity		-10 to 50°C (no freezing) 35 to 80% RH (no condensation)		
Atmosphere		No corrosive gas, explosive gas, or dust		

*1 Rated thrust and max. load capacity are guideline values assuming that the motor mounted will output the rated torque.

Stroke and max. speed

(mm/s)

Stroke length / Screw lead	100 to 600	650	700	750	800
2	100	90	80	70	60
5	250	225	200	175	150
10	500	450	400	350	300

*The max. speed is the speed when the motor mounted by the customer can output a rotation speed of 3000 rpm.
The max. speed is restricted by the stroke. Do not move at speeds beyond the limit.

Allowable overhang length

*Refer to page 330 for details.

Moment direction

MP MY MR

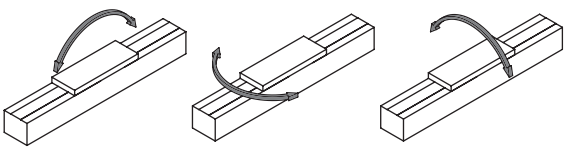

Dimensions Straight motor mounting

● ECS-06-*****-E

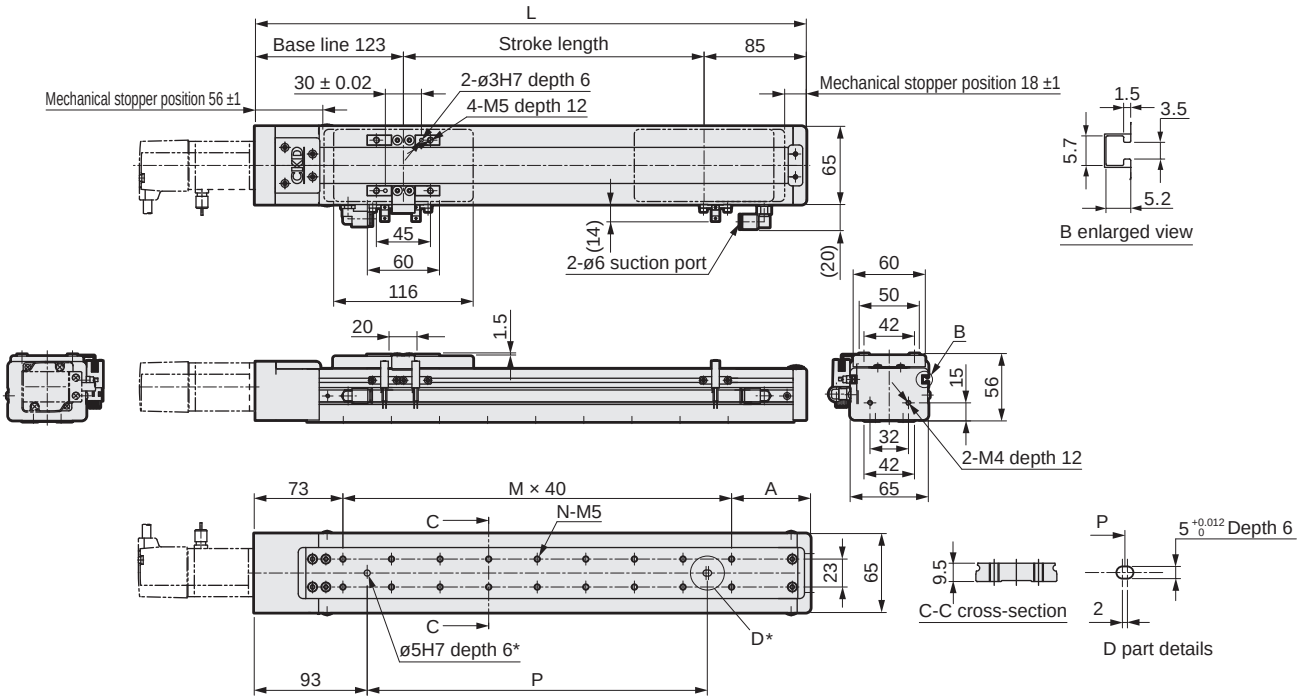

*Positioning pin hole (option)

Stroke length (mm)	50	100	150	200	250	300	350	400	450	500	550	600	650	700	750	800
L	258	308	358	408	458	508	558	608	658	708	758	808	858	908	958	1008
A	65	35	45	55	65	35	45	55	65	35	45	55	65	35	45	55
M	3	5	6	7	8	10	11	12	13	15	16	17	18	20	21	22
N	8	12	14	16	18	22	24	26	28	32	34	36	38	42	44	46
P	80	160	200	240	280	360	400	440	480	560	600	640	680	760	800	840
Weight (kg)	2.9	2.9	3.1	3.3	3.5	3.8	4.0	4.2	4.4	4.7	4.9	5.1	5.3	5.6	5.8	6.0

Motor mounting part

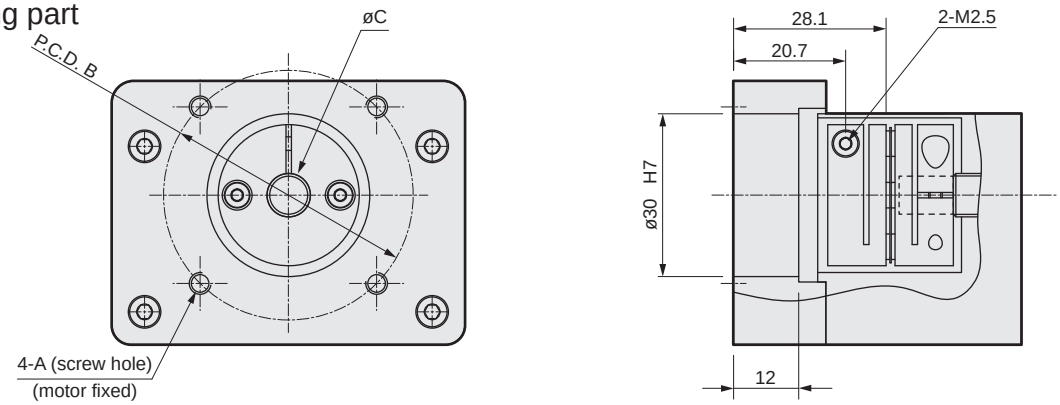

Mounted motor specification		A	B	C	Motor mounting bolt
M	100 W	M4	ø46	ø8	4-M4 × L12
Y	100 W	M4	ø46	ø8	4-M4 × L12
P	100 W	M3	ø45	ø8	4-M3 × L12
F	100 W	M4	ø46	ø8	4-M4 × L12

List of attachments

[Motor mounting parts]

Mounted motor specification	Coupling	Fitting	Motor capacity	Motor mounting bolt	
				Size	Quantity
M	Assembled at shipment	Assembled at shipment	100 W	M4	2
Y				M4	2
P				M3	4
F				M4	2

*Refer to page 338 for fitting details.

[Origin sensor/Limit sensor]

Manufacturer	Model	Quantity
OMRON Corporation	EE-SX672	3

*Refer to page 334 for sensor specifications.



Electric actuator Ball screw drive Slider Low dust specification

ECS-06 Series

Motor side mounting (left, right, bottom)

● Servo motor capacity: 100 W

How to order

ECS - 06 - 05 040 - R M 1 N C B N P - M

(A) (B) (C) (D) (E) (F) (G) (H) (I) (J) (K) (L)

(A) Body size

06	Body width 65 mm

(B) Screw lead

02	2 mm
05	5 mm
10	10 mm

(C) Stroke length

005 to 080	50 mm (In 50 mm increments) 800 mm

(D) Motor mounting direction

R	Right mounting
D	Bottom mounting
L	Left mounting

(E) Mounted motor specification

M	Select the mounted motor specification from the table below.
Y	
P	
F	

(F) Motor capacity

1	100 W

(G) Brake

N	None

(H) Origin sensor (1 pc) *1 *2

N	None
C	Outside motor side
D	Outside motor opposite side

(I) Limit sensor (2 pcs) *1 *2

N	None
B	Outside

(J) Grease nipple *3

N	None (Body mounting direction: Standard)

(K) Positioning pin hole

N	None
P	Yes

(L) Magnet slider method

M	Yes

Manufacturer	100 W
Mitsubishi Electric Corporation	M
Delta Electronics Co., Ltd.	M
Sanyo Denki Co., Ltd.	M
YASKAWA Electric Corporation	Y
Keyence Corporation	Y
Panasonic Corporation	P
OMRON Corporation	M
Fuji Electric Co., Ltd.	M
FANUC CORPORATION	F
Bosch Rexroth AG	P
Rockwell Automation, Inc.	M
SIEMENS AG	M

*Refer to page 275 for the motor model No.

*1: Origin sensor and limit sensor are available as a set. As it is both-or-nothing, select "None" for both.
*2: The user can adjust the sensor position. (Included at shipment)
*3: "Body mounting direction: Standard" here refers to mounting from the bottom side.

Specifications

Applicable motor capacity		100 W servo motor		
Drive method		Ball screw ø12		
Ball screw accuracy grade		C7		
Stroke length	mm	50 to 800		
Screw lead	mm	2	5	10
Max. load capacity *1	Horizontal kg	30	30	15
	Vertical kg	15	10	5
Max. speed	mm/s	100	250	500
Rated thrust *1	N	854	341	170
Max. speed	mm/s	100	250	500
Repeatability	mm	±0.01		
Lost motion	mm	0.1 or less		
Dynamic allowable load	N	1209		
Static allowable moment	N·m	MP: 80, MY: 70, MR: 75		
Dynamic allowable moment	N·m	MP: 8.9, MY: 8.9, MR: 24.8		
Operating ambient temperature, humidity		0 to 40°C (no freezing) 35 to 80% RH (no condensation)		
Storage ambient temperature, humidity		-10 to 50°C (no freezing) 35 to 80% RH (no condensation)		
Atmosphere		No corrosive gas, explosive gas, or dust		

*1 Rated thrust and max. load capacity are guideline values assuming that the motor mounted will output the rated torque.

Stroke and max. speed

(mm/s)

Stroke length / Screw lead	100 to 600	650	700	750	800
2	100	90	80	70	60
5	250	225	200	175	150
10	500	450	400	350	300

*The max. speed is the speed when the motor mounted by the customer can output a rotation speed of 3000 rpm.
The max. speed is restricted by the stroke. Do not move at speeds beyond the limit.

Allowable overhang length

*Refer to page 330 for details.

Moment direction

MP MY MR

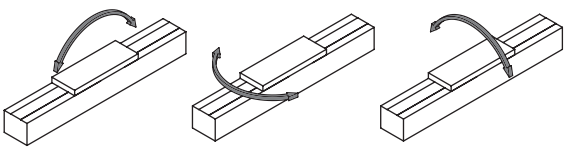

Dimensions Motor right-side mounting

● ECS-06-*****-R

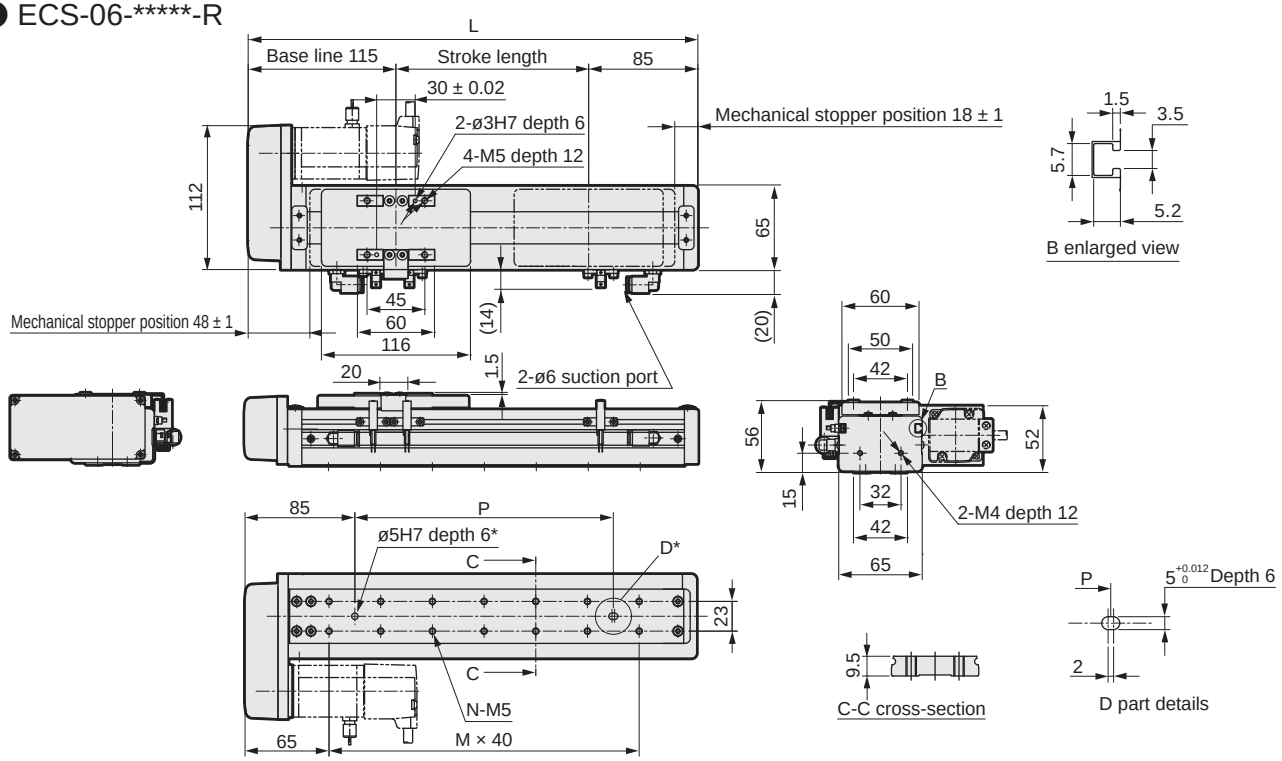

*Positioning pin hole (option)

Stroke length (mm)	50	100	150	200	250	300	350	400	450	500	550	600	650	700	750	800
L	250	300	350	400	450	500	550	600	650	700	750	800	850	900	950	1000
A	65	35	45	55	65	35	45	55	65	35	45	55	65	35	45	55
M	3	5	6	7	8	10	11	12	13	15	16	17	18	20	21	22
N	8	12	14	16	18	22	24	26	28	32	34	36	38	42	44	46
P	80	160	200	240	280	360	400	440	480	560	600	640	680	760	800	840
Weight (kg)	2.4	2.9	3.1	3.4	3.6	3.8	4.0	4.3	4.5	4.7	4.9	5.2	5.4	5.6	5.8	6.0

Motor mounting part

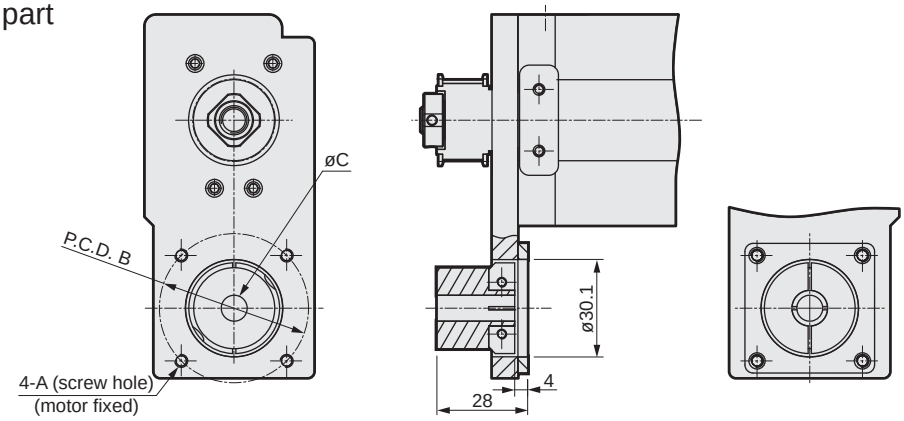

Mounted motor specification		A	B	C	Motor mounting bolt
M	100 W	M4	ø46	ø8	4-M4 × L12
Y	100 W	M4	ø46	ø8	4-M4 × L12
P	100 W	M3	ø45	ø8	4-M3 × L12
F	100 W	M4	ø46	ø8	4-M4 × L12

List of attachments

[Motor mounting parts]

Mounted motor specification	Timing belt, pulley	Fitting	Motor capacity	Motor mounting bolt	
				Size	Quantity
M	Included at shipment	Assembled at shipment	100 W	M4	2
Y				M4	2
P				M3	4
F				M4	2

*Refer to page 338 for fitting details.

[Origin sensor/Limit sensor]

Manufacturer	Model	Quantity
OMRON Corporation	EE-SX672	3

*Refer to page 334 for sensor specifications.

Dimensions Motor bottom mounting

● ECS-06-*****-D

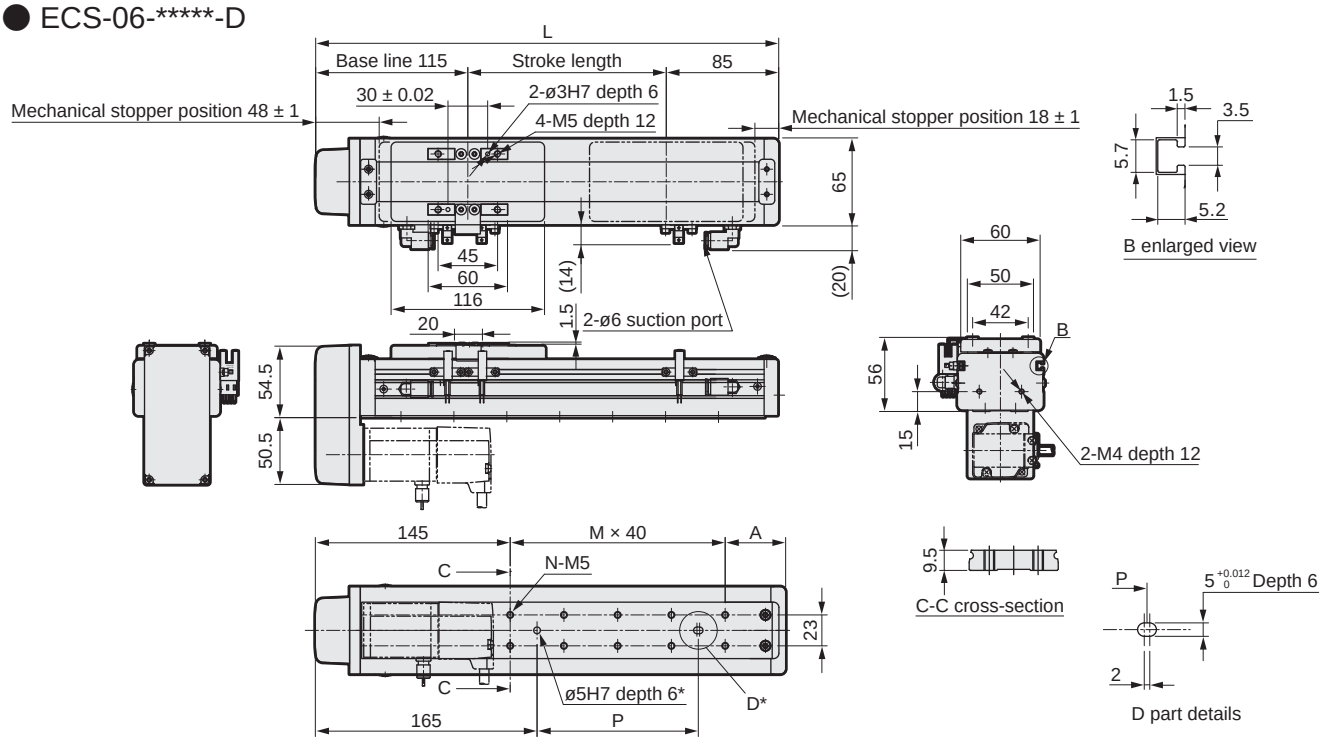

*Positioning pin hole (option)

Stroke length (mm)	50	100	150	200	250	300	350	400	450	500	550	600	650	700	750	800
L	250	300	350	400	450	500	550	600	650	700	750	800	850	900	950	1000
A	65	35	45	55	65	35	45	55	65	35	45	55	65	35	45	55
M	1	3	4	5	6	8	9	10	11	13	14	15	16	18	19	20
N	4	8	10	12	14	18	20	22	24	28	30	32	34	38	40	42
P	0	80	120	160	200	280	320	360	400	480	520	560	600	680	720	760
Weight (kg)	2.4	2.9	3.1	3.4	3.6	3.8	4.0	4.3	4.5	4.7	5.0	5.2	5.4	5.6	5.8	6.0

Motor mounting part

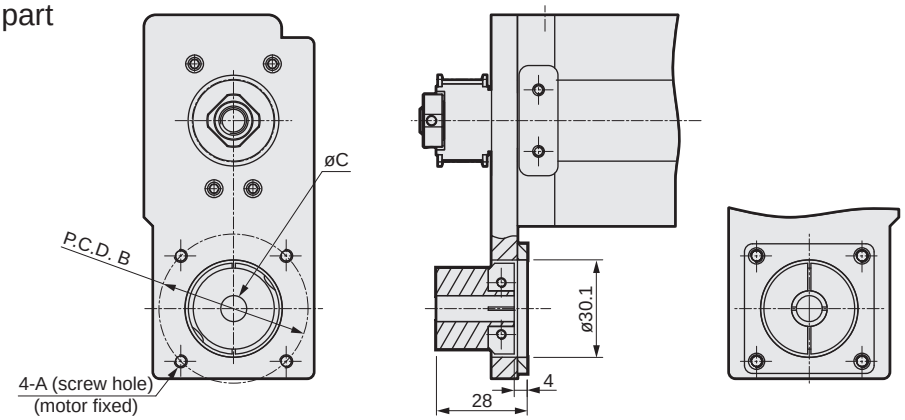

Mounted motor specification		A	B	C	Motor mounting bolt
M	100 W	M4	ø46	ø8	4-M4 × L12
Y	100 W	M4	ø46	ø8	4-M4 × L12
P	100 W	M3	ø45	ø8	4-M3 × L12
F	100 W	M4	ø46	ø8	4-M4 × L12

List of attachments

[Motor mounting parts]

Mounted motor specification	Timing belt, pulley	Fitting	Motor capacity	Motor mounting bolt	
				Size	Quantity
M	Included at shipment	Assembled at shipment	100 W	M4	2
Y				M4	2
P				M3	4
F				M4	2

*Refer to page 338 for fitting details.

[Origin sensor/Limit sensor]

Manufacturer	Model	Quantity
OMRON Corporation	EE-SX672	3

*Refer to page 334 for sensor specifications.

Dimensions Motor left-side mounting

● ECS-06-*****-L

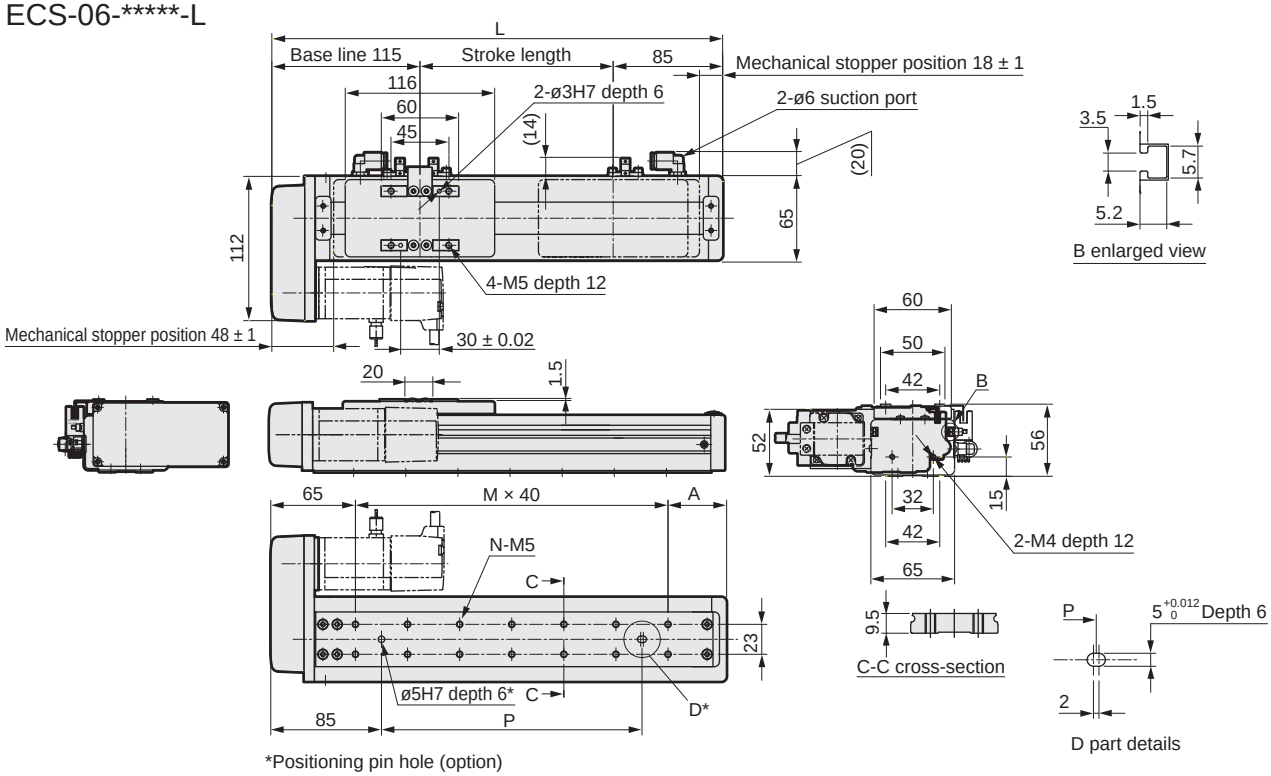

Stroke length (mm)	50	100	150	200	250	300	350	400	450	500	550	600	650	700	750	800
L	250	300	350	400	450	500	550	600	650	700	750	800	850	900	950	1000
A	65	35	45	55	65	35	45	55	65	35	45	55	65	35	45	55
M	3	5	6	7	8	10	11	12	13	15	16	17	18	20	21	22
N	8	12	14	16	18	22	24	26	28	32	34	36	38	42	44	46
P	80	160	200	240	280	360	400	440	480	560	600	640	680	760	800	840
Weight (kg)	2.4	2.9	3.1	3.4	3.6	3.8	4.0	4.3	4.5	4.7	4.9	5.2	5.4	5.6	5.8	6.0

Motor mounting part

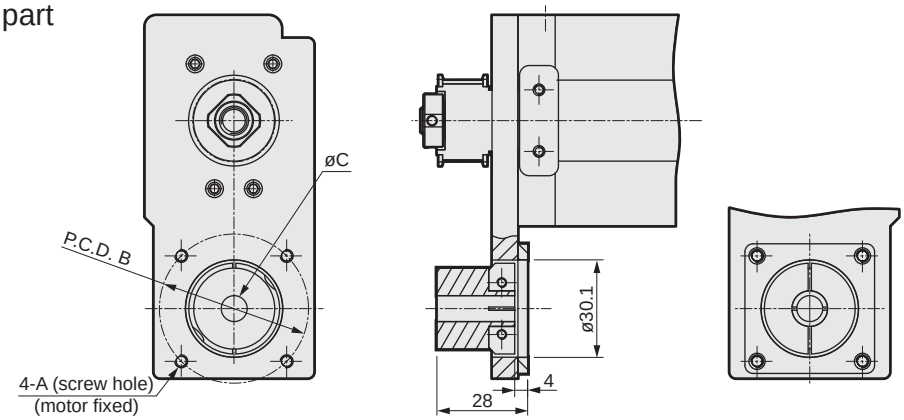

Mounted motor specification		A	B	C	Motor mounting bolt
M	100 W	M4	ø46	ø8	4-M4 × L12
Y	100 W	M4	ø46	ø8	4-M4 × L12
P	100 W	M3	ø45	ø8	4-M3 × L12
F	100 W	M4	ø46	ø8	4-M4 × L12

List of attachments

[Motor mounting parts]

Mounted motor specification	Timing belt, pulley	Fitting	Motor capacity	Motor mounting bolt	
				Size	Quantity
M	Included at shipment	Assembled at shipment	100 W	M4	2
Y				M4	2
P				M3	4
F				M4	2

*Refer to page 338 for fitting details.

[Origin sensor/Limit sensor]

Manufacturer	Model	Quantity
OMRON Corporation	EE-SX672	3

*Refer to page 334 for sensor specifications.

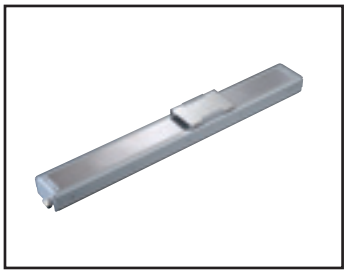

Electric actuator Ball screw drive Slider Low dust specification

ECS-10 Series

Straight motor mounting, built-in mounting

● Servo motor capacity: 100 W

How to order

ECS - 10 (A) - 05 (B) 040 (C) - E (D) M (E) 1 (F) N (G) C (H) B (I) N (J) P (K)

(A) Body size

10	Body width 102 mm

(B) Screw lead

05	5 mm
10	10 mm
16	16 mm
20	20 mm

(C) Stroke length

005 to 105	50 mm (In 50 mm increments) 1050 mm

(D) Motor mounting direction *1

E	Straight mounting
B	Built-in mounting

(E) Mounted motor specification

M	Select the mounted motor specification from the table below.
Y	
P	
F	

(F) Motor capacity

1	100 W

(G) Brake *1

N	None
B	Yes

(H) Origin sensor (1 pc) *2 *3 *4 *5 *7

N	None
A	Inside motor side
B	Inside motor opposite side
C	Outside motor side
D	Outside motor opposite side

(I) Limit sensor (2 pcs) *2 *3 *4 *5 *7

N	None
A	Inside
B	Outside

(J) Grease nipple *5 *6 *7

N	None (Body mounting direction: Standard)
R	Right
L	Left

(K) Positioning pin hole

N	None
P	Yes

Manufacturer	100 W
Mitsubishi Electric Corporation	M
Delta Electronics Co., Ltd.	M
Sanyo Denki Co., Ltd.	M
YASKAWA Electric Corporation	Y
Keyence Corporation	Y
Panasonic Corporation	P
OMRON Corporation	M
Fuji Electric Co., Ltd.	M
FANUC CORPORATION	F
Bosch Rexroth AG	P
Rockwell Automation, Inc.	M
SIEMENS AG	M

*Refer to page 275 for the motor model No.

*1: "Yes" to the Brake can be selected only when the motor mounting direction is built-in mounting.
*2: Origin sensor and limit sensor are available as a set. As it is both-or-nothing, select "None" for both.
*3: Origin sensor B and limit sensor A cannot be combined.
*4: For sensor inside mounting, the user cannot adjust the position. (Assembled at shipment)
For sensor outside mounting, the user can adjust the position. (Included at shipment)
*5: Contact CKD to use the origin sensor, limit sensor and grease nipple in the same direction.
*6: "Body mounting direction: Standard" here refers to mounting from the bottom side.
*7: For sensor inside mounting, select "None" for the grease nipple.

Specifications

Applicable motor capacity		100 W servo motor			
Drive method		Ball screw ø16			
Ball screw accuracy grade		C7			
Stroke length	mm	50 to 1050			
Screw lead	mm	5	10	16	20
Max. load capacity *1	Horizontal kg	50	30	22	18
	Vertical kg	12	8	5	3
Max. speed	mm/s	250	500	800	1000
Rated thrust *1	N	341	170	106	85
Repeatability	mm	±0.01			
Lost motion	mm	0.1 or less			
Dynamic allowable load	N	2651			
Static allowable moment	N·m	MP: 110, MY: 110, MR: 120			
Dynamic allowable moment	N·m	MP: 24.1, MY: 24.1, MR: 24.8			
Operating ambient temperature, humidity		0 to 40°C (no freezing) 35 to 80% RH (no condensation)			
Storage ambient temperature, humidity		-10 to 50°C (no freezing) 35 to 80% RH (no condensation)			
Atmosphere		No corrosive gas, explosive gas, or dust			

*1 Rated thrust and max. load capacity are guideline values assuming that the motor mounted will output the rated torque.

Stroke and max. speed

(mm/s)

Screw lead \ Stroke length	100 to 750	800	850	900	950	1050
5	250	225	200	175	150	125
10	500	450	400	350	300	250
16	800	720	640	560	480	400
20	1000	900	800	700	600	500

*The max. speed is the speed when the motor mounted by the customer can output a rotation speed of 3000 rpm.
The max. speed is restricted by the stroke. Do not move at speeds beyond the limit.

Allowable overhang length

*Refer to page 330 for details.

Moment direction

MP MY MR

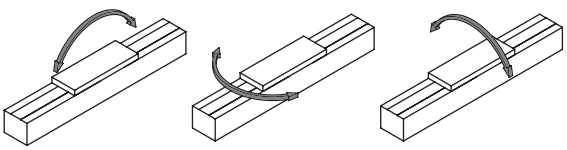

Dimensions Straight motor mounting

● ECS-10-*****-E

· Refer to page 336 for grease nipple dimensions.

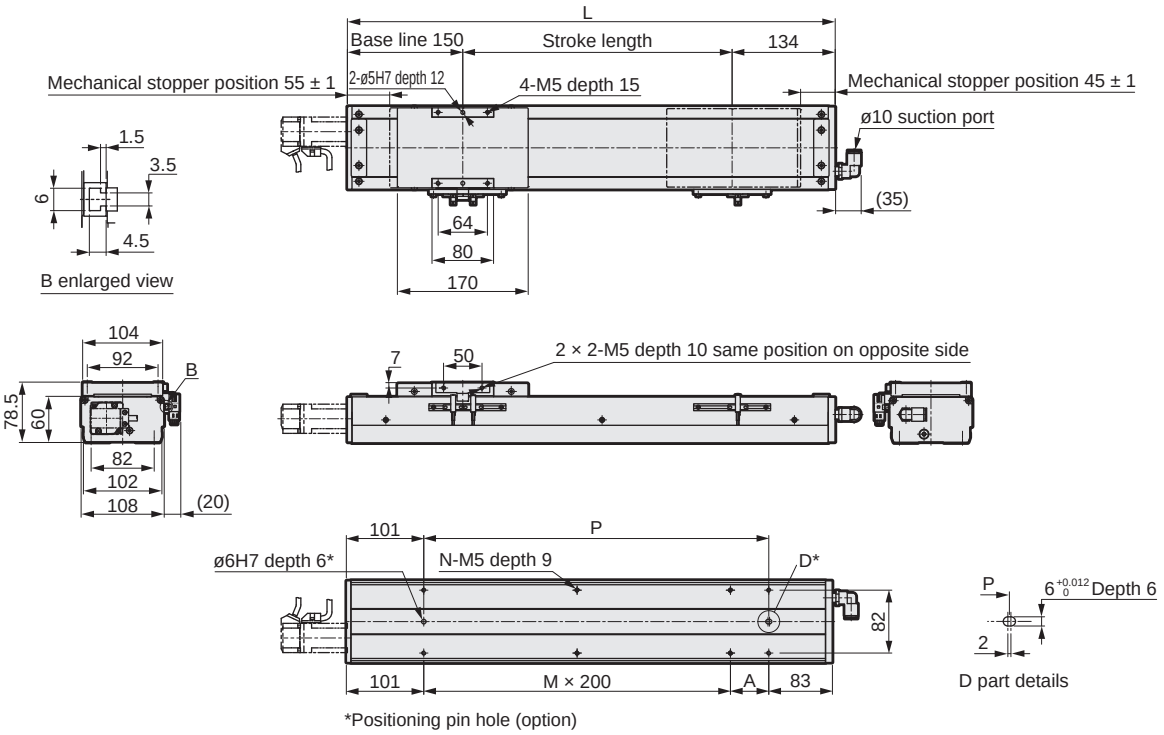

*Positioning pin hole (option)

Stroke length (mm)	50	100	150	200	250	300	350	400	450	500	550	600	650	700	750	800	850	900	950	1000	1050
L	334	384	434	484	534	584	634	684	734	784	834	884	934	984	1034	1084	1134	1184	1234	1284	1334
A	150	200	50	100	150	200	50	100	150	200	50	100	150	200	50	100	150	200	50	100	150
M	0	0	1	1	1	1	2	2	2	2	3	3	3	3	4	4	4	4	5	5	5
N	4	4	6	6	6	6	8	8	8	8	10	10	10	10	12	12	12	12	14	14	14
P	150	200	250	300	350	400	450	500	550	600	650	700	750	800	850	900	950	1000	1050	1100	1150
Weight (kg)	5.07	5.5	6.0	6.4	6.8	7.2	7.6	8.1	8.5	8.9	9.3	9.7	10.2	10.6	11.0	11.4	11.8	12.3	12.7	13.1	13.5

Motor mounting part

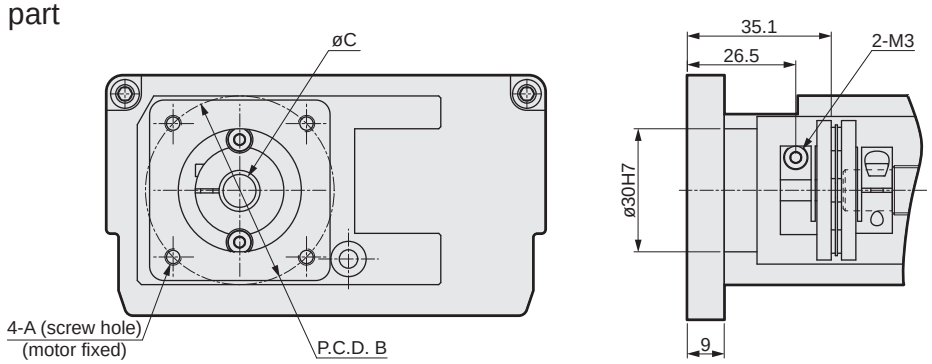

Mounted motor specification		A	B	C	Motor mounting bolt
M	100 W	M4	ø46	ø8	4-M4 × L10
Y	100 W	M4	ø46	ø8	4-M4 × L10
P	100 W	M3	ø45	ø8	4-M3 × L10
F	100 W	M4	ø46	ø8	4-M4 × L10

List of attachments

[Motor mounting parts]

Mounted motor specification	Coupling	Fitting	Motor capacity	Motor mounting bolt	
				Size	Quantity
M	Assembled at shipment	Included at shipment	100 W	M4	2
Y				M4	2
P				M3	4
F				M4	2

*Refer to page 338 for fitting details.

[Origin sensor/Limit sensor]

Manufacturer	Model	Quantity
OMRON Corporation	EE-SX672	3

*Refer to page 334 for sensor specifications.

Dimensions Motor built-in mounting

● ECS-10-*****-B

· Refer to page 336 for grease nipple dimensions.

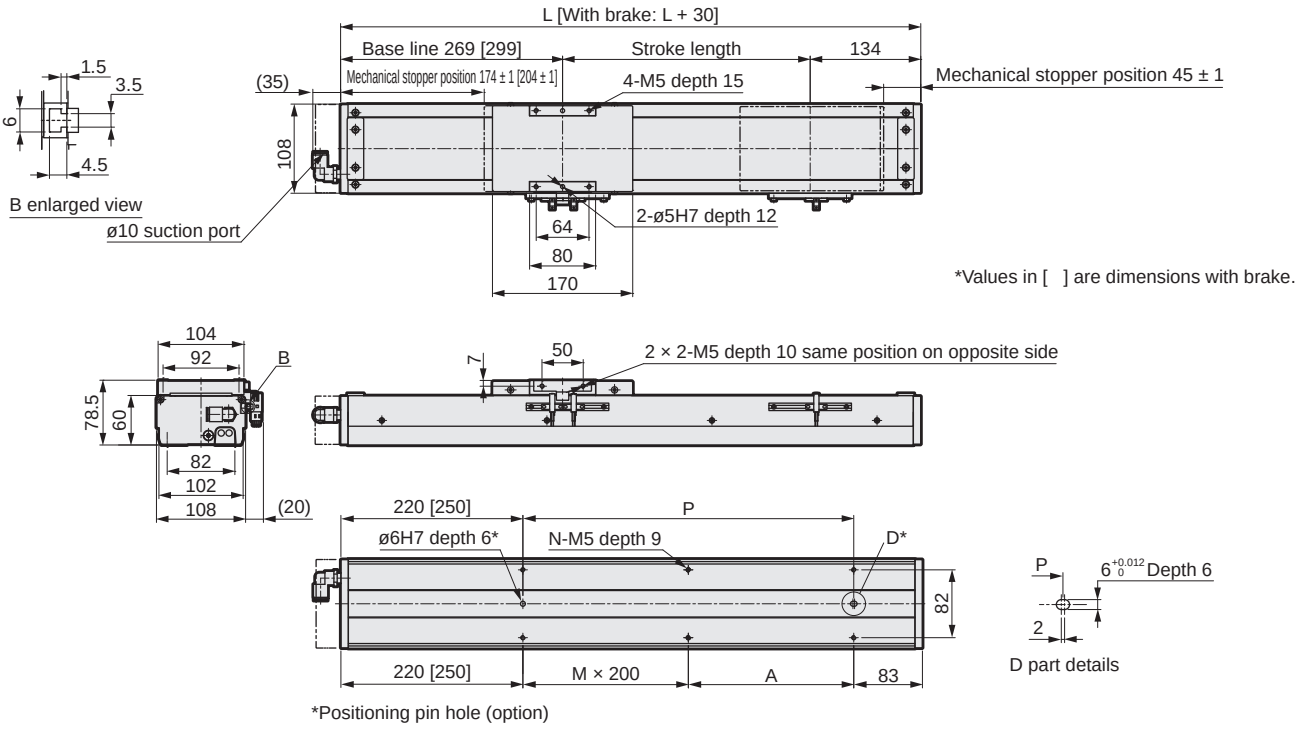

Stroke length (mm)	50	100	150	200	250	300	350	400	450	500	550	600	650	700	750	800	850	900	950	1000	1050
L	453	503	553	603	653	703	753	803	853	903	953	1003	1053	1103	1153	1203	1253	1303	1353	1403	1453
A	150	200	50	100	150	200	50	100	150	200	50	100	150	200	50	100	150	200	50	100	150
M	0	0	1	1	1	1	2	2	2	2	3	3	3	3	4	4	4	4	5	5	5
N	4	4	6	6	6	6	8	8	8	8	10	10	10	10	12	12	12	12	14	14	14
P	150	200	250	300	350	400	450	500	550	600	650	700	750	800	850	900	950	1000	1050	1100	1150
Weight (kg)	5.4	6.0	6.4	6.9	7.3	7.7	8.1	8.5	8.9	9.3	9.7	10.2	10.6	11.0	11.4	11.8	12.2	12.6	13.0	13.5	13.9

Motor mounting part

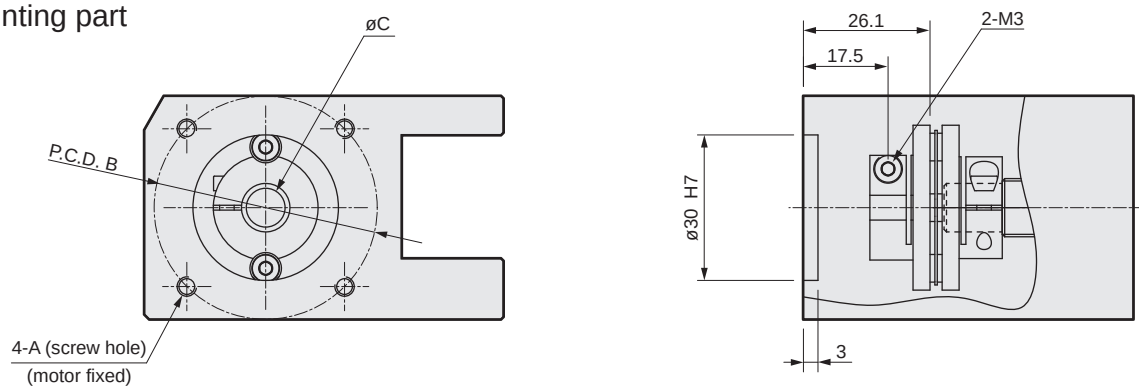

Mounted motor specification		A	B	C	Motor mounting bolt
M	100 W	M4	ø46	ø8	4-M4 × L10
Y	100 W	M4	ø46	ø8	4-M4 × L10
P	100 W	M3	ø45	ø8	4-M3 × L10

List of attachments

[Motor mounting parts]

Mounted motor specification	Coupling	Fitting	Motor capacity	Motor mounting bolt	
				Size	Quantity
M	Assembled at shipment	Included at shipment	100 W	M4	2
Y				M4	2
P				M3	4

*Refer to page 338 for fitting details.

[Origin sensor/Limit sensor]

Manufacturer	Model	Quantity
OMRON Corporation	EE-SX672	3

*Refer to page 334 for sensor specifications.

MEMO



Electric actuator Ball screw drive Slider Low dust specification

ECS-10 Series

Motor side mounting (left, right, bottom)

● Servo motor capacity: 100 W

How to order

ECS - 10 - 05 040 - R M 1 N C B N P

(A) (B) (C) (D) (E) (F) (G) (H) (I) (J) (K)

(A) Body size

10	Body width 102 mm

(B) Screw lead

05	5 mm
10	10 mm
16	16 mm
20	20 mm

(C) Stroke length

005 to 105	50 mm (In 50 mm increments) 1050 mm

(D) Motor mounting direction *7

R	Right mounting
D	Bottom mounting
L	Left mounting

(E) Mounted motor specification

M Y P F	Select the mounted motor specification from the table below.

(F) Motor capacity

1	100 W

(G) Brake

N	None

(H) Origin sensor (1 pc) *1 *2 *3 *4 *7

N	None
A	Inside motor side
B	Inside motor opposite side
C	Outside motor side
D	Outside motor opposite side

(I) Limit sensor (2 pcs) *1 *2 *3 *4 *7

N	None
A	Inside
B	Outside

(J) Grease nipple *4 *5 *6 *7

N	None (Body mounting direction: Standard)
R	Right
L	Left

(K) Positioning pin hole

N	None
P	Yes

*1: Origin sensor and limit sensor are available as a set. As it is both-or-nothing, select "None" for both.
*2: Origin sensor B and limit sensor A cannot be combined.
*3: For sensor inside mounting, the user cannot adjust the position. (Assembled at shipment)
For sensor outside mounting, the user can adjust the position. (Included at shipment)
*4: Contact CKD to use the origin sensor, limit sensor and grease nipple in the same direction.
*5: "Body mounting direction: Standard" here refers to mounting from the bottom side.
*6: When selecting motor mounting direction R, grease nipple R cannot be selected.
When selecting L, grease nipple L cannot be selected.
*7: For sensor inside mounting, select "None" for the grease nipple.

Manufacturer	100 W
Mitsubishi Electric Corporation	M
Delta Electronics Co., Ltd.	M
Sanyo Denki Co., Ltd.	M
YASKAWA Electric Corporation	Y
Keyence Corporation	Y
Panasonic Corporation	P
OMRON Corporation	M
Fuji Electric Co., Ltd.	M
FANUC CORPORATION	F
Bosch Rexroth AG	P
Rockwell Automation, Inc.	M
SIEMENS AG	M

*Refer to page 275 for the motor model No.

Specifications

Applicable motor capacity		100 W servo motor			
Drive method		Ball screw ø16			
Ball screw accuracy grade		C7			
Stroke length	mm	50 to 1050			
Screw lead	mm	5	10	16	20
Max. load capacity *1	Horizontal kg	50	30	22	18
	Vertical kg	12	8	5	3
Max. speed	mm/s	250	500	800	1000
Rated thrust *1	N	341	170	106	85
Repeatability	mm	±0.01			
Lost motion	mm	0.1 or less			
Dynamic allowable load	N	2651			
Static allowable moment	N·m	MP: 110, MY: 110, MR: 120			
Dynamic allowable moment	N·m	MP: 24.1, MY: 24.1, MR: 24.8			
Operating ambient temperature, humidity		0 to 40°C (no freezing) 35 to 80% RH (no condensation)			
Storage ambient temperature, humidity		-10 to 50°C (no freezing) 35 to 80% RH (no condensation)			
Atmosphere		No corrosive gas, explosive gas, or dust			

*1 Rated thrust and max. load capacity are guideline values assuming that the motor mounted will output the rated torque.

Stroke and max. speed

(mm/s)

Stroke length / Screw lead	100 to 750	800	850	900	950	1050
5	250	225	200	175	150	125
10	500	450	400	350	300	250
16	800	720	640	560	480	400
20	1000	900	800	700	600	500

*The max. speed is the speed when the motor mounted by the customer can output a rotation speed of 3000 rpm.
The max. speed is restricted by the stroke. Do not move at speeds beyond the limit.

Allowable overhang length

*Refer to page 330 for details.

Moment direction

MP MY MR

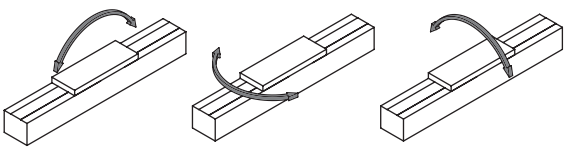

Dimensions Motor right-side mounting

● ECS-10-*****-R

· Refer to page 336 for grease nipple dimensions.

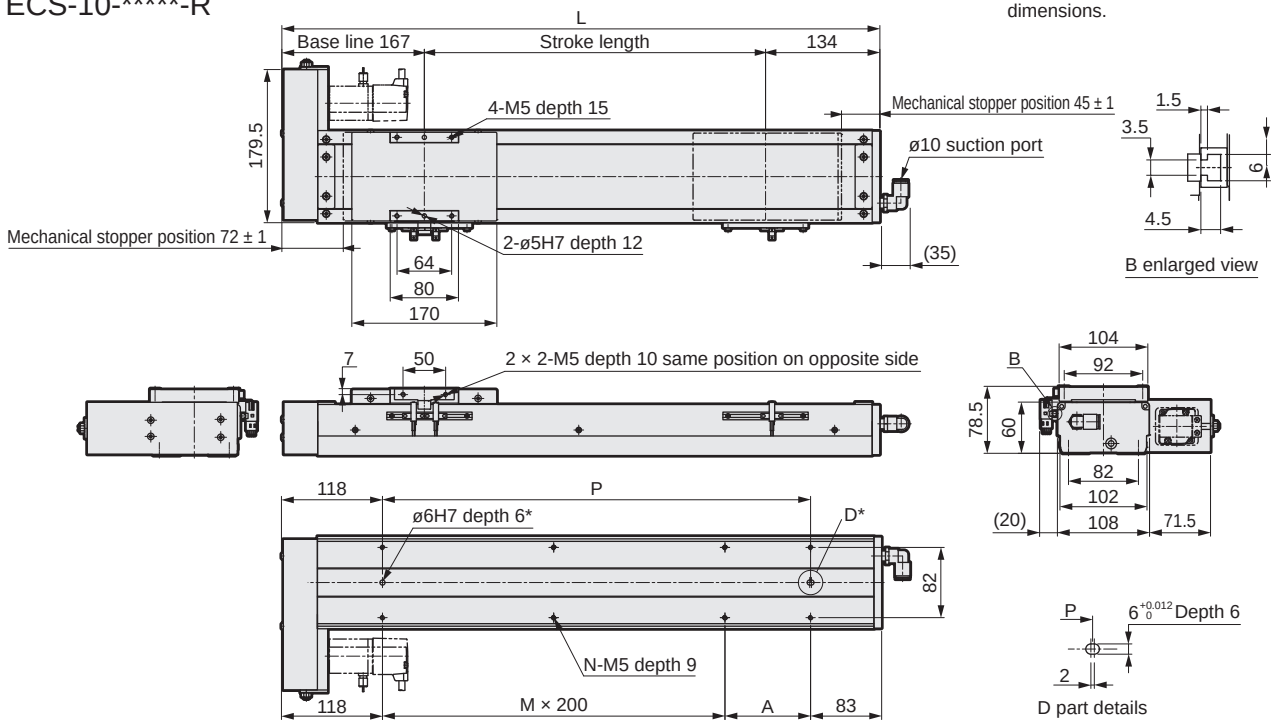

*Positioning pin hole (option)

Stroke length (mm)	50	100	150	200	250	300	350	400	450	500	550	600	650	700	750	800	850	900	950	1000	1050
L	351	401	451	501	551	601	651	701	751	801	851	901	951	1001	1051	1101	1151	1201	1251	1301	1351
A	150	200	50	100	150	200	50	100	150	200	50	100	150	200	50	100	150	200	50	100	150
M	0	0	1	1	1	1	2	2	2	2	3	3	3	3	4	4	4	4	5	5	5
N	4	4	6	6	6	6	8	8	8	8	10	10	10	10	12	12	12	12	14	14	14
P	150	200	250	300	350	400	450	500	550	600	650	700	750	800	850	900	950	1000	1050	1100	1150
Weight (kg)	5.5	5.9	6.4	6.8	7.2	7.6	8.0	8.4	8.8	9.2	9.7	10.1	10.5	10.9	11.3	11.7	12.1	12.5	13.0	13.4	13.8

Motor mounting part

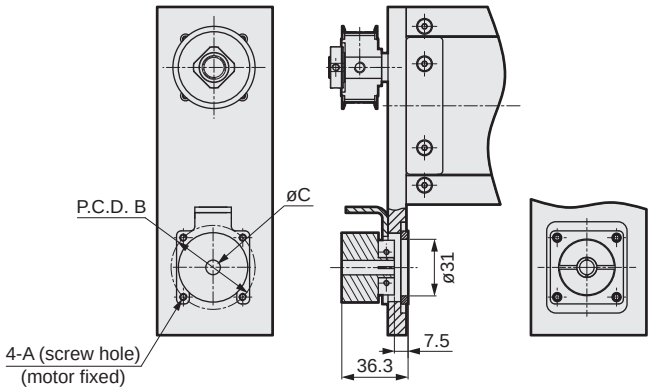

Mounted motor specification		A	B	C	Motor mounting bolt
M	100 W	M4	ø46	ø8	4-M4 × L16
Y	100 W	M4	ø46	ø8	4-M4 × L16
P	100 W	M3	ø45	ø8	4-M3 × L16
F	100 W	M4	ø46	ø8	4-M4 × L16

List of attachments

[Motor mounting parts]

Mounted motor specification	Timing belt, pulley	Fitting	Motor capacity	Motor mounting bolt	
				Size	Quantity
M	Included at shipment	Included at shipment	100 W	M4	2
Y				M4	2
P				M3	4
F				M4	2

*Refer to page 338 for fitting details.

[Origin sensor/Limit sensor]

Manufacturer	Model	Quantity
OMRON Corporation	EE-SX672	3

*Refer to page 334 for sensor specifications.

Dimensions Motor bottom mounting

● ECS-10-*****-D

· Refer to page 336 for grease nipple dimensions.

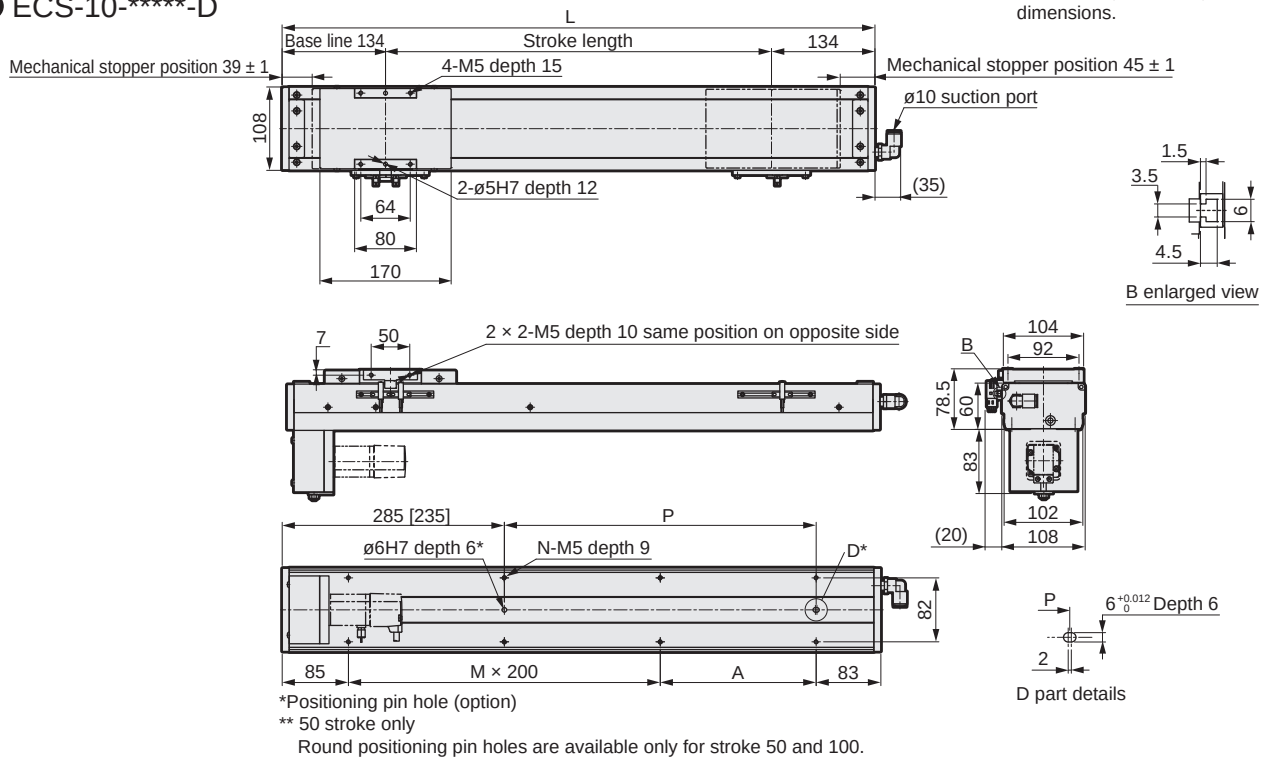

*Positioning pin hole (option)
** 50 stroke only
Round positioning pin holes are available only for stroke 50 and 100.

Stroke length (mm)	50	100	150	200	250	300	350	400	450	500	550	600	650	700	750	800	850	900	950	1000	1050
L	318	368	418	468	518	568	618	668	718	768	818	868	918	968	1018	1068	1118	1168	1218	1268	1318
A	150	200	50	100	150	200	50	100	150	200	50	100	150	200	50	100	150	200	50	100	150
M	0	0	1	1	1	1	2	2	2	2	3	3	3	3	4	4	4	4	5	5	5
N	4	4	6	6	6	6	8	8	8	8	10	10	10	10	12	12	12	12	14	14	14
P	0	0	50	100	150	200	250	300	350	400	450	500	550	600	650	700	750	800	850	900	950
Weight (kg)	5.5	5.9	6.4	6.8	7.2	7.6	8.0	8.4	8.8	9.2	9.7	10.1	10.5	10.9	11.3	11.7	12.1	12.5	13.0	13.4	13.8

Motor mounting part

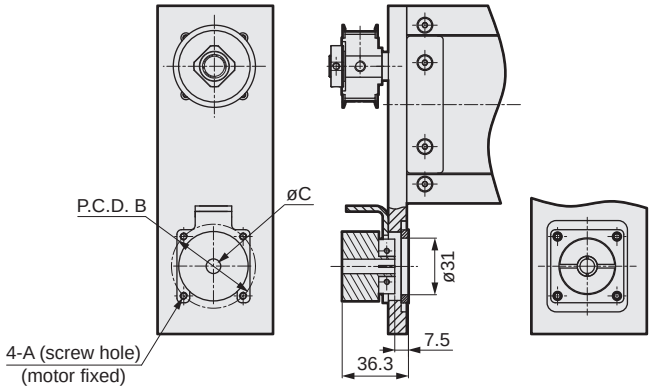

Mounted motor specification		A	B	C	Motor mounting bolt
M	100 W	M4	ø46	ø8	4-M4 × L16
Y	100 W	M4	ø46	ø8	4-M4 × L16
P	100 W	M3	ø45	ø8	4-M3 × L16
F	100 W	M4	ø46	ø8	4-M4 × L16

List of attachments

[Motor mounting parts]

Mounted motor specification	Timing belt, pulley	Fitting	Motor capacity	Motor mounting bolt	
				Size	Quantity
M	Included at shipment	Included at shipment	100 W	M4	2
Y				M4	2
P				M3	4
F				M4	2

*Refer to page 338 for fitting details.

[Origin sensor/Limit sensor]

Manufacturer	Model	Quantity
OMRON Corporation	EE-SX672	3

*Refer to page 334 for sensor specifications.

Dimensions Motor left-side mounting

● ECS-10-*****-L

· Refer to page 336 for grease nipple dimensions.

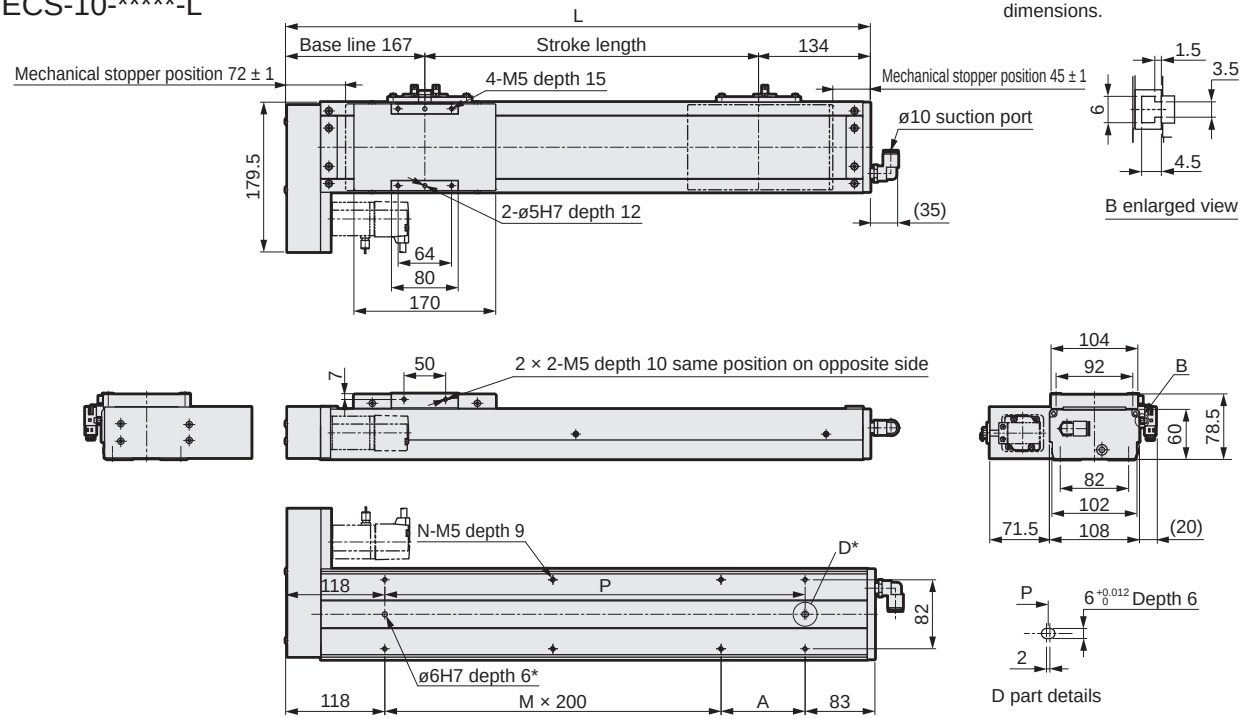

*Positioning pin hole (option)

Stroke length (mm)	50	100	150	200	250	300	350	400	450	500	550	600	650	700	750	800	850	900	950	1000	1050
L	351	401	451	501	551	601	651	701	751	801	851	901	951	1001	1051	1101	1151	1201	1251	1301	1351
A	150	200	50	100	150	200	50	100	150	200	50	100	150	200	50	100	150	200	50	100	150
M	0	0	1	1	1	1	2	2	2	2	3	3	3	3	4	4	4	4	5	5	5
N	4	4	6	6	6	6	8	8	8	8	10	10	10	10	12	12	12	12	14	14	14
P	150	200	250	300	350	400	450	500	550	600	650	700	750	800	850	900	950	1000	1050	1100	1150
Weight (kg)	5.5	5.9	6.4	6.8	7.2	7.6	8.0	8.4	8.8	9.2	9.7	10.1	10.5	10.9	11.3	11.7	12.1	12.5	13.0	13.4	13.8

Motor mounting part

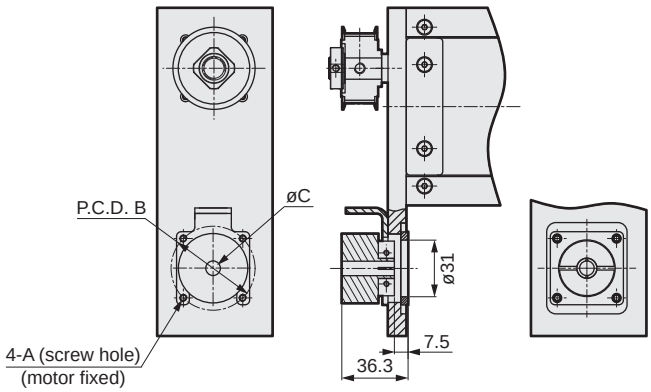

Mounted motor specification		A	B	C	Motor mounting bolt
M	100 W	M4	ø46	ø8	4-M4 × L16
Y	100 W	M4	ø46	ø8	4-M4 × L16
P	100 W	M3	ø45	ø8	4-M3 × L16
F	100 W	M4	ø46	ø8	4-M4 × L16

List of attachments

[Motor mounting parts]

Mounted motor specification	Timing belt, pulley	Fitting	Motor capacity	Motor mounting bolt	
				Size	Quantity
M	Included at shipment	Included at shipment	100 W	M4	2
Y				M4	2
P				M3	4
F				M4	2

*Refer to page 338 for fitting details.

[Origin sensor/Limit sensor]

Manufacturer	Model	Quantity
OMRON Corporation	EE-SX672	3

*Refer to page 334 for sensor specifications.

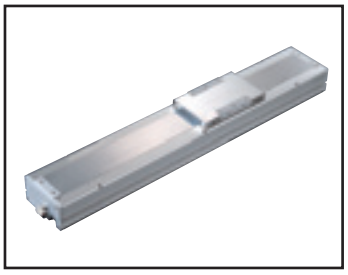

Electric actuator Ball screw drive Slider Low dust specification

ECS-12 Series

Straight motor mounting, built-in mounting

● Servo motor capacity: 100 W

How to order

ECS - 12 (A) - 05 (B) 040 (C) - E (D) M (E) 1 (F) N (G) N (H) N (I) N (J) P (K)

(A) Body size

12	Body width 102 mm

(B) Screw lead

05	5 mm
10	10 mm
16	16 mm
20	20 mm

(C) Stroke length

005 to 105	50 mm (In 50 mm increments) 1050 mm

(D) Motor mounting direction *1 *2

E	Straight mounting
B	Built-in mounting

(E) Mounted motor specification

M, Y, P, F	Select the mounted motor specification from the table below.

(F) Motor capacity

1	100 W

(G) Brake *2

N	None
B	Yes

(H) Origin sensor (1 pc) *3 *4 *5

N	None
A	Inside motor side
B	Inside motor opposite side
C	Outside motor side
D	Outside motor opposite side

(I) Limit sensor (2 pcs) *3 *4 *5

N	None
A	Inside
B	Outside

(J) Grease nipple *5 *6

N	None (Body mounting direction: Standard)
R	Right
L	Left

(K) Positioning pin hole

N	None
P	Yes

Manufacturer	100 W
Mitsubishi Electric Corporation	M
Delta Electronics Co., Ltd.	M
Sanyo Denki Co., Ltd.	M
YASKAWA Electric Corporation	Y
Keyence Corporation	Y
Panasonic Corporation	P
OMRON Corporation	M
Fuji Electric Co., Ltd.	M
FANUC CORPORATION	F
Bosch Rexroth AG	P
Rockwell Automation, Inc.	M
SIEMENS AG	M

*Refer to page 275 for the motor model No.

*1: Contact CKD when using an OMRON motor.
*2: "Yes" to the Brake can be selected only when the motor mounting direction is built-in mounting.
*3: Origin sensor and limit sensor are available as a set. As it is both-or-nothing, select "None" for both.
*4: For sensor inside mounting, the user cannot adjust the position. (Assembled at shipment)
For sensor outside mounting, the user can adjust the position. (Included at shipment)
*5: Contact CKD to use the origin sensor, limit sensor and grease nipple in the same direction.
*6: "Body mounting direction: Standard" here refers to mounting from the bottom side.

Specifications

Applicable motor capacity		100 W servo motor			
Drive method		Ball screw ø16			
Ball screw accuracy grade		C7			
Stroke length	mm	50 to 1050			
Screw lead	mm	5	10	16	20
Max. load capacity *1	Horizontal kg	50	30	22	18
	Vertical kg	12	8	5	3
Max. speed	mm/s	250	500	800	1000
Rated thrust *1	N	341	170	106	85
Repeatability	mm	±0.01			
Lost motion	mm	0.1 or less			
Dynamic allowable load	N	1660			
Static allowable moment	N·m	MP: 150, MY: 150, MR: 130			
Dynamic allowable moment	N·m	MP: 42.3, MY: 42.3, MR: 53.1			
Operating ambient temperature, humidity		0 to 40°C (no freezing) 35 to 80% RH (no condensation)			
Storage ambient temperature, humidity		-10 to 50°C (no freezing) 35 to 80% RH (no condensation)			
Atmosphere		No corrosive gas, explosive gas, or dust			

*1 Rated thrust and max. load capacity are guideline values assuming that the motor mounted will output the rated torque.

Stroke and max. speed

(mm/s)

Screw lead \ Stroke length	100 to 750	800	850	900	950	1050
5	250	225	200	175	150	125
10	500	450	400	350	300	250
16	800	720	640	560	480	400
20	1000	900	800	700	600	500

*The max. speed is the speed when the motor mounted by the customer can output a rotation speed of 3000 rpm.
The max. speed is restricted by the stroke. Do not move at speeds beyond the limit.

Allowable overhang length

*Refer to page 330 for details.

Moment direction

MP MY MR

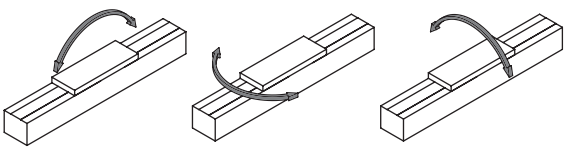

Dimensions Straight motor mounting

● ECS-12-*****-E

· Refer to page 336 for grease nipple dimensions.

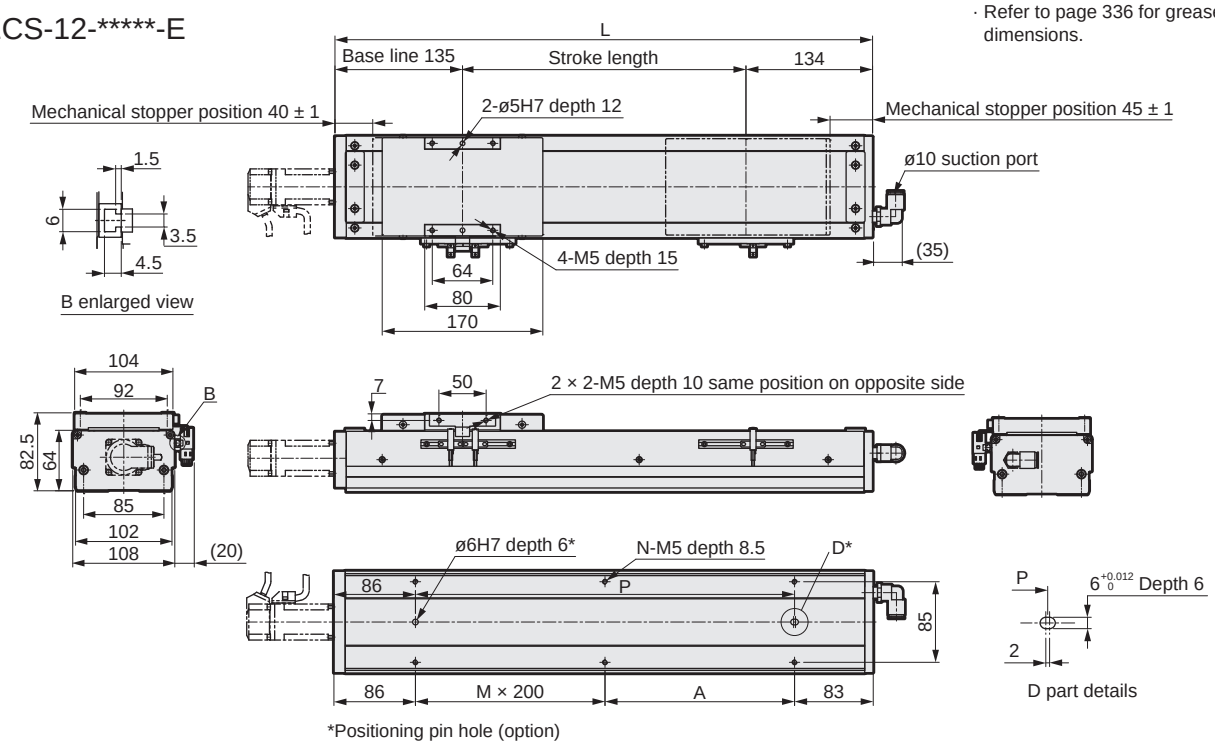

*Positioning pin hole (option)

Stroke length (mm)	50	100	150	200	250	300	350	400	450	500	550	600	650	700	750	800	850	900	950	1000	1050
L	319	369	419	469	519	569	619	669	719	769	819	869	919	969	1019	1069	1119	1169	1219	1269	1319
A	150	200	50	100	150	200	50	100	150	200	50	100	150	200	50	100	150	200	50	100	150
M	0	0	1	1	1	1	2	2	2	2	3	3	3	3	4	4	4	4	5	5	5
N	4	4	6	6	6	6	8	8	8	8	10	10	10	10	12	12	12	12	14	14	14
P	150	200	250	300	350	400	450	500	550	600	650	700	750	800	850	900	950	1000	1050	1100	1150
Weight (kg)	5.6	6.1	6.5	6.9	7.3	7.8	8.2	8.6	9.0	9.5	9.9	10.3	10.7	11.2	11.6	12.0	12.4	12.9	13.3	13.7	14.1

Motor mounting part

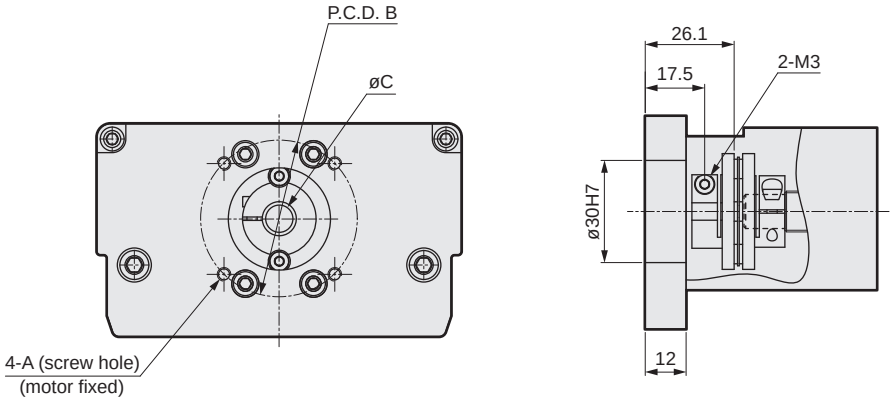

Mounted motor specification		A	B	C	Motor mounting bolt
M	100 W	M4	ø46	ø8	4-M4 × L16
Y	100 W	M4	ø46	ø8	4-M4 × L16
P	100 W	M3	ø45	ø8	4-M3 × L16
F	100 W	M4	ø46	ø8	4-M4 × L16

List of attachments

[Motor mounting parts]

Mounted motor specification	Coupling	Fitting	Motor capacity	Motor mounting bolt	
				Size	Quantity
M	Assembled at shipment	Included at shipment	100 W	M4	2
Y				M4	2
P				M3	4
F				M4	2

*Refer to page 338 for fitting details.

[Origin sensor/Limit sensor]

Manufacturer	Model	Quantity
OMRON Corporation	EE-SX672	3

*Refer to page 334 for sensor specifications.

Dimensions Motor built-in mounting

● ECS-12-*****-B

· Refer to page 336 for grease nipple dimensions.

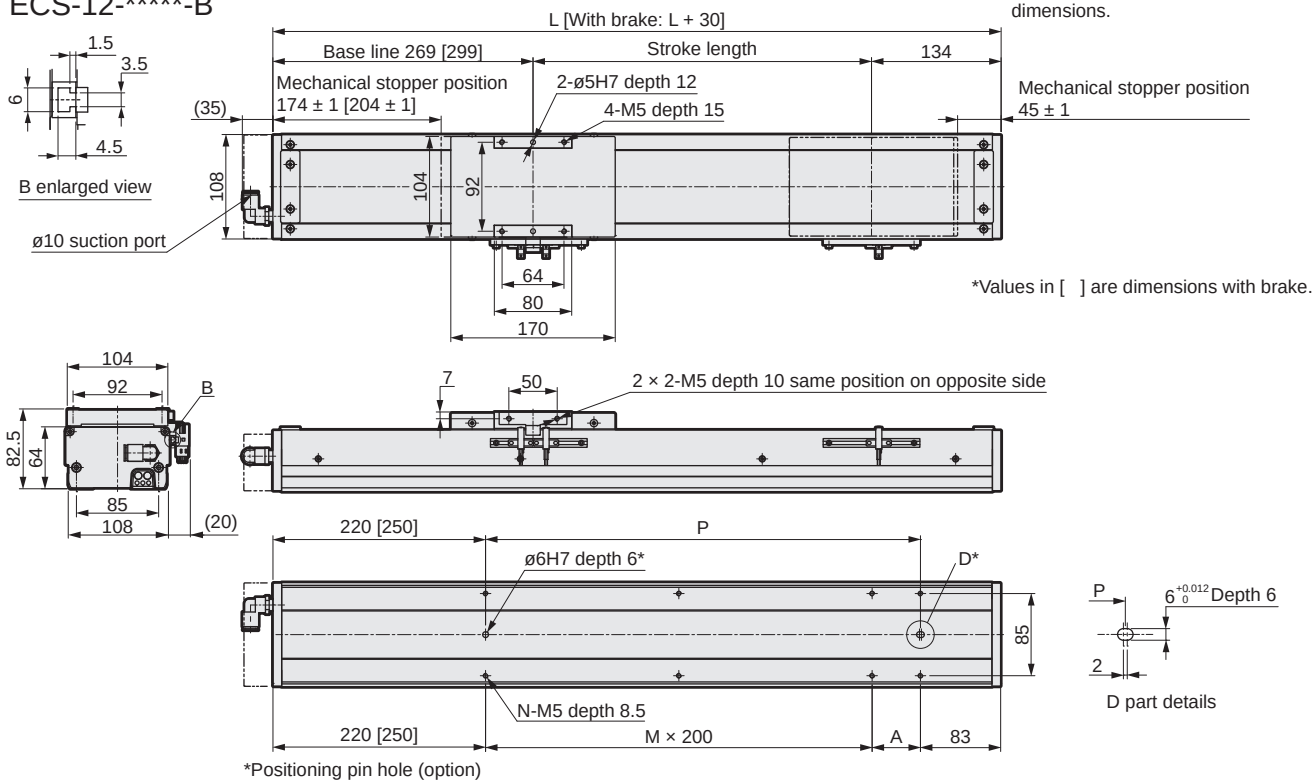

Stroke length (mm)	50	100	150	200	250	300	350	400	450	500	550	600	650	700	750	800	850	900	950	1000	1050
L	453	503	553	603	653	703	753	803	853	903	953	1003	1053	1103	1153	1203	1253	1303	1353	1403	1453
A	150	200	50	100	150	200	50	100	150	200	50	100	150	200	50	100	150	200	50	100	150
M	0	0	1	1	1	1	2	2	2	2	3	3	3	3	4	4	4	4	5	5	5
N	4	4	6	6	6	6	8	8	8	8	10	10	10	10	12	12	12	12	14	14	14
P	150	200	250	300	350	400	450	500	550	600	650	700	750	800	850	900	950	1000	1050	1100	1150
Weight (kg)	5.6	6.0	6.4	6.9	7.3	7.7	8.1	8.5	8.9	9.3	9.7	10.2	10.6	11.0	11.4	11.8	12.2	12.6	13.0	13.5	13.9

Motor mounting part

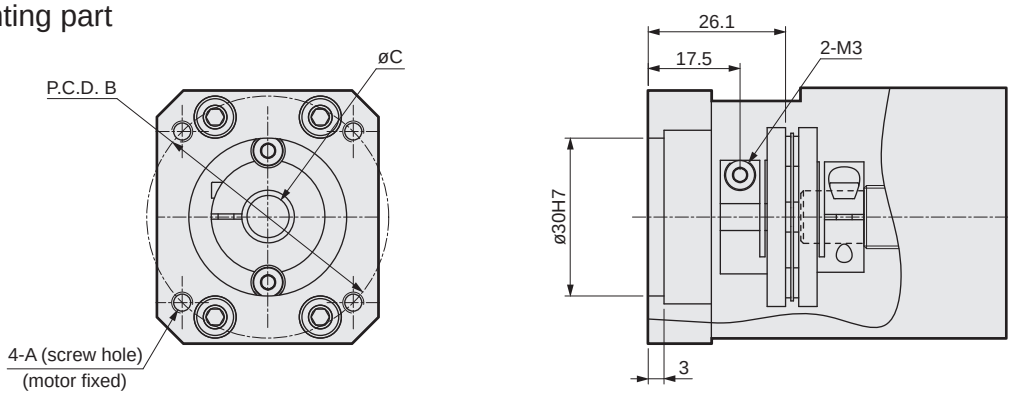

Mounted motor specification		A	B	C	Motor mounting bolt
M	100 W	M4	ø46	ø8	4-M4 × L16
Y	100 W	M4	ø46	ø8	4-M4 × L16
P	100 W	M3	ø45	ø8	4-M3 × L16

List of attachments

[Motor mounting parts]

Mounted motor specification	Coupling	Fitting	Motor capacity	Motor mounting bolt	
				Size	Quantity
M	Assembled at shipment	Included at shipment	100 W	M4	2
Y				M4	2
P				M3	4

*Refer to page 338 for fitting details.

[Origin sensor/Limit sensor]

Manufacturer	Model	Quantity
OMRON Corporation	EE-SX672	3

*Refer to page 334 for sensor specifications.

MEMO



Electric actuator Ball screw drive Slider Low dust specification

ECS-12 Series

Motor side mounting (left, right, bottom)

● Servo motor capacity: 100 W

How to order

ECS - 12 - 05 040 - R M 1 N N N N P

(A) (B) (C) (D) (E) (F) (G) (H) (I) (J) (K)

(A) Body size

12	Body width 102 mm

(B) Screw lead

05	5 mm
10	10 mm
16	16 mm
20	20 mm

(C) Stroke length

005 to 105	50 mm (In 50 mm increments) 1050 mm

(D) Motor mounting direction *3 *6

R	Right mounting
D	Bottom mounting
L	Left mounting

(E) Mounted motor specification

M	Select the mounted motor specification from the table below.
Y	
P	
F	

(F) Motor capacity

1	100 W

(G) Brake

N	None

(H) Origin sensor (1 pc) *1 *2 *3 *4

N	None
A	Inside motor side
B	Inside motor opposite side
C	Outside motor side
D	Outside motor opposite side

(I) Limit sensor (2 pcs) *1 *2 *3 *4

N	None
A	Inside
B	Outside

(J) Grease nipple *4 *5 *6

N	None (Body mounting direction: Standard)
R	Right
L	Left

(K) Positioning pin hole

N	None
P	Yes

Manufacturer	100 W
Mitsubishi Electric Corporation	M
Delta Electronics Co., Ltd.	M
Sanyo Denki Co., Ltd.	M
YASKAWA Electric Corporation	Y
Keyence Corporation	Y
Panasonic Corporation	P
OMRON Corporation	M
Fuji Electric Co., Ltd.	M
FANUC CORPORATION	F
Bosch Rexroth AG	P
Rockwell Automation, Inc.	M
SIEMENS AG	M

*Refer to page 275 for the motor model No.

*1: Origin sensor and limit sensor are available as a set. As it is both-or-nothing, select "None" for both.
*2: For sensor inside mounting, the user cannot adjust the position. (Assembled at shipment)
For sensor outside mounting, the user can adjust the position. (Included at shipment)
*3: When the motor mounting direction is R or L, origin sensor A and limit sensor A cannot be combined.
*4: Contact CKD to use the origin sensor, limit sensor and grease nipple in the same direction.
*5: "Body mounting direction: Standard" here refers to mounting from the bottom side.
*6: When selecting motor mounting direction R, grease nipple R cannot be selected.
When selecting L, grease nipple L cannot be selected.

Specifications

Applicable motor capacity		100 W servo motor			
Drive method		Ball screw ø16			
Ball screw accuracy grade		C7			
Stroke length	mm	50 to 1050			
Screw lead	mm	5	10	16	20
Max. load capacity *1	Horizontal kg	50	30	22	18
	Vertical kg	12	8	5	3
Max. speed	mm/s	250	500	800	1000
Rated thrust *1	N	341	170	106	85
Repeatability	mm	±0.01			
Lost motion	mm	0.1 or less			
Dynamic allowable load	N	1660			
Static allowable moment	N·m	MP: 150, MY: 150, MR: 130			
Dynamic allowable moment	N·m	MP: 42.3, MY: 42.3, MR: 53.1			
Operating ambient temperature, humidity		0 to 40°C (no freezing) 35 to 80% RH (no condensation)			
Storage ambient temperature, humidity		-10 to 50°C (no freezing) 35 to 80% RH (no condensation)			
Atmosphere		No corrosive gas, explosive gas, or dust			

*1 Rated thrust and max. load capacity are guideline values assuming that the motor mounted will output the rated torque.

Stroke and max. speed

(mm/s)

Screw lead \ Stroke length	100 to 750	800	850	900	950	1050
5	250	225	200	175	150	125
10	500	450	400	350	300	250
16	800	720	640	560	480	400
20	1000	900	800	700	600	500

*The max. speed is the speed when the motor mounted by the customer can output a rotation speed of 3000 rpm.
The max. speed is restricted by the stroke. Do not move at speeds beyond the limit.

Allowable overhang length

*Refer to page 330 for details.

Moment direction

MP MY MR

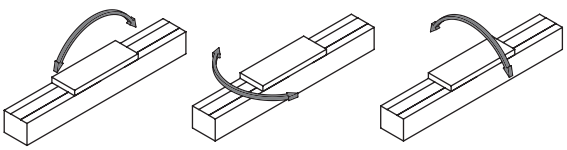

Dimensions Motor right-side mounting

● ECS-12-*****-R

· Refer to page 336 for grease nipple dimensions.

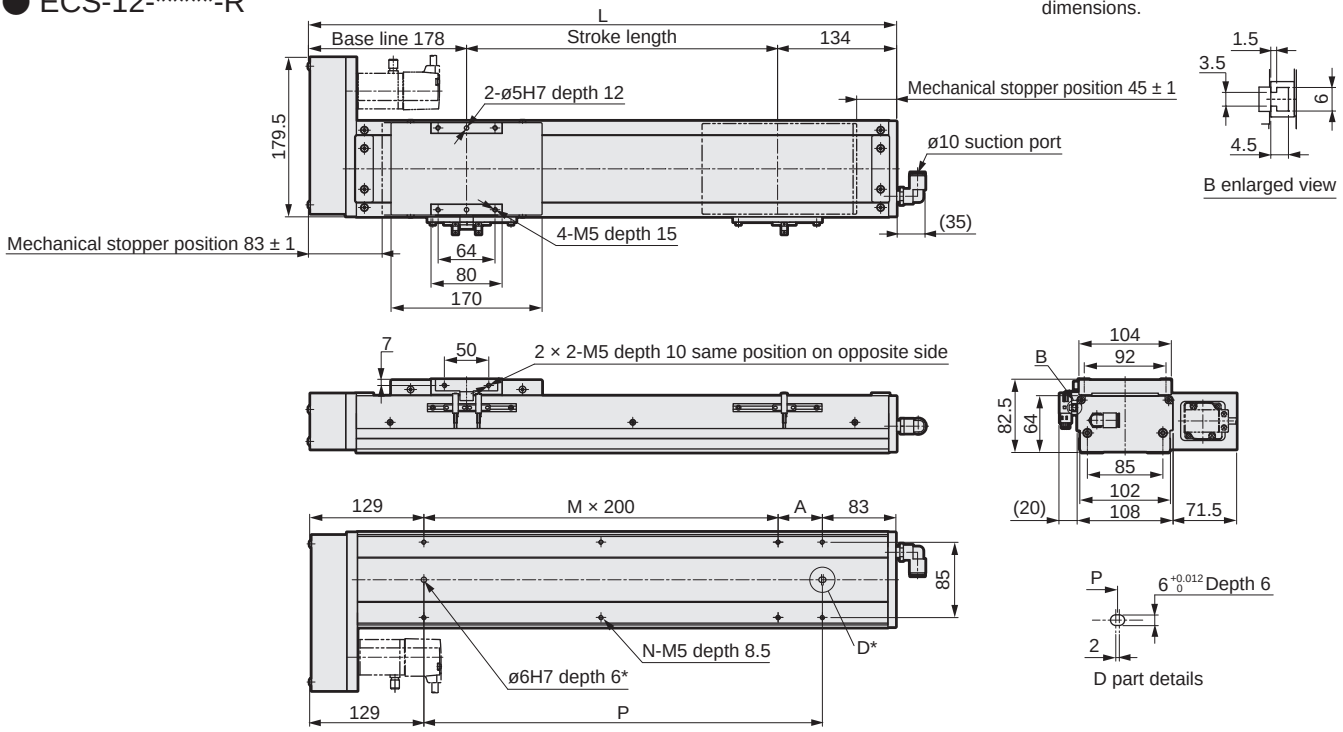

*Positioning pin hole (option)

Stroke length (mm)	50	100	150	200	250	300	350	400	450	500	550	600	650	700	750	800	850	900	950	1000	1050
L	362	412	462	512	562	612	662	712	762	812	862	912	962	1012	1062	1112	1162	1212	1262	1312	1362
A	150	200	50	100	150	200	50	100	150	200	50	100	150	200	50	100	150	200	50	100	150
M	0	0	1	1	1	1	2	2	2	2	3	3	3	3	4	4	4	4	5	5	5
N	4	4	6	6	6	6	8	8	8	8	10	10	10	10	12	12	12	12	14	14	14
P	150	200	250	300	350	400	450	500	550	600	650	700	750	800	850	900	950	1000	1050	1100	1150
Weight (kg)	6.4	6.9	7.3	7.7	8.2	8.6	9.0	9.4	9.9	10.3	10.7	11.1	11.6	12.0	12.4	12.8	13.3	13.7	14.1	14.5	15.0

Motor mounting part

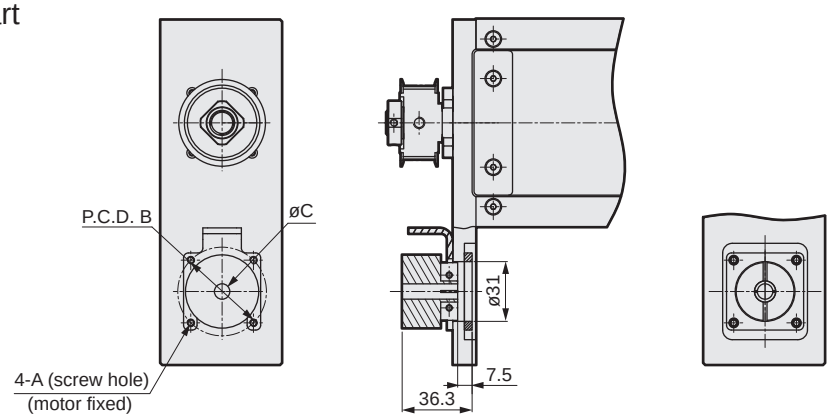

Mounted motor specification		A	B	C	Motor mounting bolt
M	100 W	M4	ø46	ø8	4-M4 × L16
Y	100 W	M4	ø46	ø8	4-M4 × L16
P	100 W	M3	ø45	ø8	4-M3 × L16
F	100 W	M4	ø46	ø8	4-M4 × L16

List of attachments

[Motor mounting parts]

Mounted motor specification	Timing belt, pulley	Fitting	Motor capacity	Motor mounting bolt	
				Size	Quantity
M	Included at shipment	Included at shipment	100 W	M4	2
Y				M4	2
P				M3	4
F				M4	2

*Refer to page 338 for fitting details.

[Origin sensor/Limit sensor]

Manufacturer	Model	Quantity
OMRON Corporation	EE-SX672	3

*Refer to page 334 for sensor specifications.

Dimensions Motor bottom mounting

● ECS-12-*****-D

· Refer to page 336 for grease nipple dimensions.

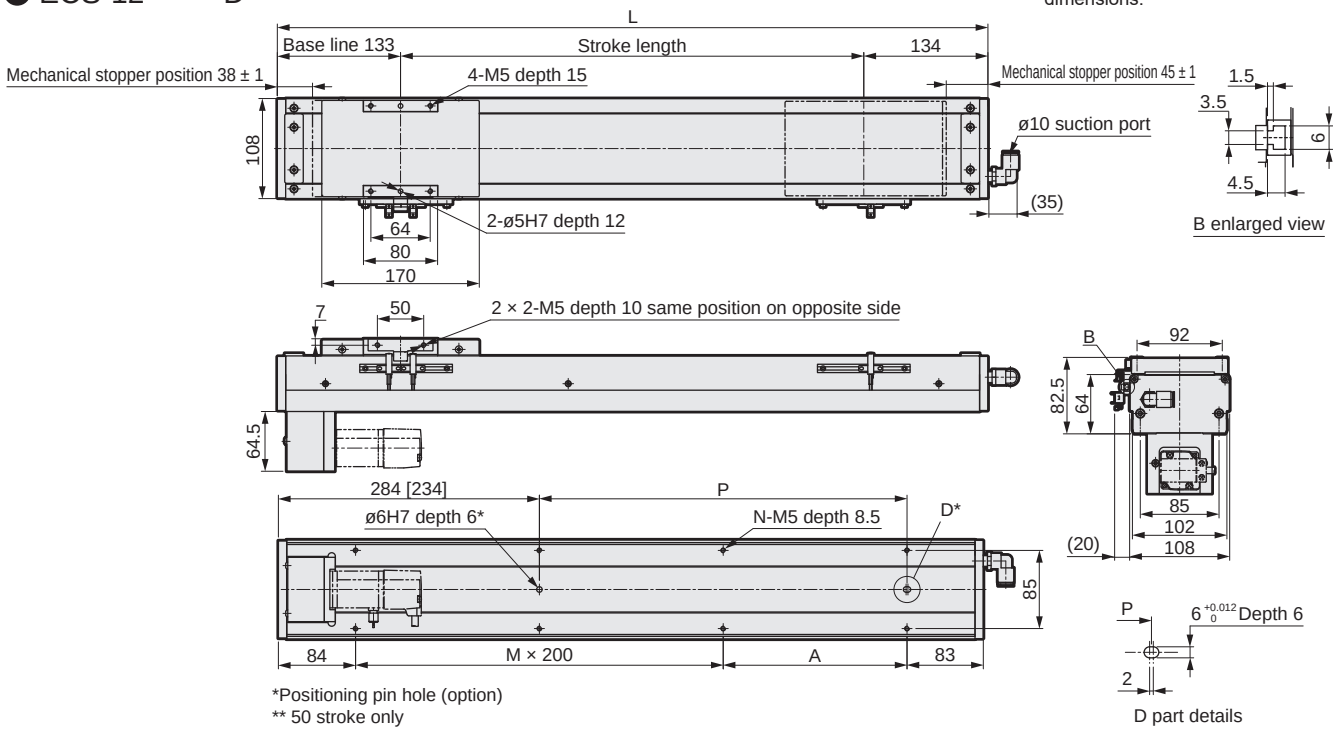

*Positioning pin hole (option)
** 50 stroke only
Round positioning pin holes are available only for stroke 50 and 100.

Stroke length (mm)	50	100	150	200	250	300	350	400	450	500	550	600	650	700	750	800	850	900	950	1000	1050
L	317	367	417	467	517	567	617	667	717	767	817	867	917	967	1017	1067	1117	1167	1217	1267	1317
A	150	200	50	100	150	200	50	100	150	200	50	100	150	200	50	100	150	200	50	100	150
M	0	0	1	1	1	1	2	2	2	2	3	3	3	3	4	4	4	4	5	5	5
N	4	4	6	6	6	6	8	8	8	8	10	10	10	10	12	12	12	12	14	14	14
P	0	0	50	100	150	200	250	300	350	400	450	500	550	600	650	700	750	800	850	900	950
Weight (kg)	6.4	6.9	7.3	7.7	8.2	8.6	9.0	9.4	9.9	10.3	10.7	11.1	11.6	12.0	12.4	12.8	13.3	13.7	14.1	14.5	15.0

Motor mounting part

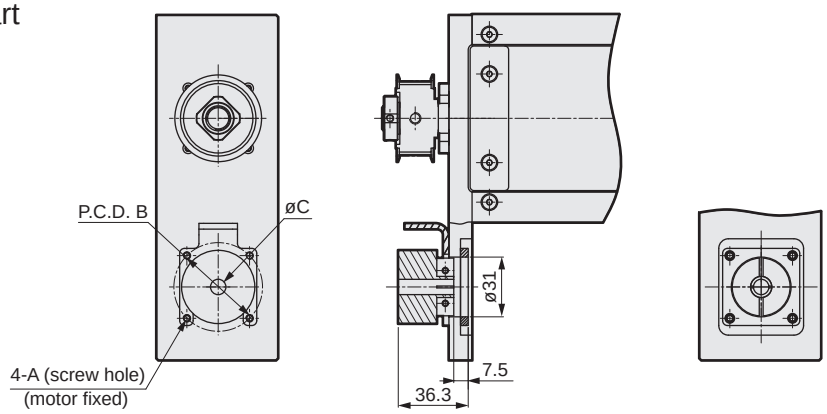

Mounted motor specification		A	B	C	Motor mounting bolt
M	100 W	M4	ø46	ø8	4-M4 × L16
Y	100 W	M4	ø46	ø8	4-M4 × L16
P	100 W	M3	ø45	ø8	4-M3 × L16
F	100 W	M4	ø46	ø8	4-M4 × L16

List of attachments

[Motor mounting parts]

Mounted motor specification	Timing belt, pulley	Fitting	Motor capacity	Motor mounting bolt	
				Size	Quantity
M	Included at shipment	Included at shipment	100 W	M4	2
Y				M4	2
P				M3	4
F				M4	2

*Refer to page 338 for fitting details.

[Origin sensor/Limit sensor]

Manufacturer	Model	Quantity
OMRON Corporation	EE-SX672	3

*Refer to page 334 for sensor specifications.

Dimensions Motor left-side mounting

● ECS-12-*****-L

· Refer to page 336 for grease nipple dimensions.

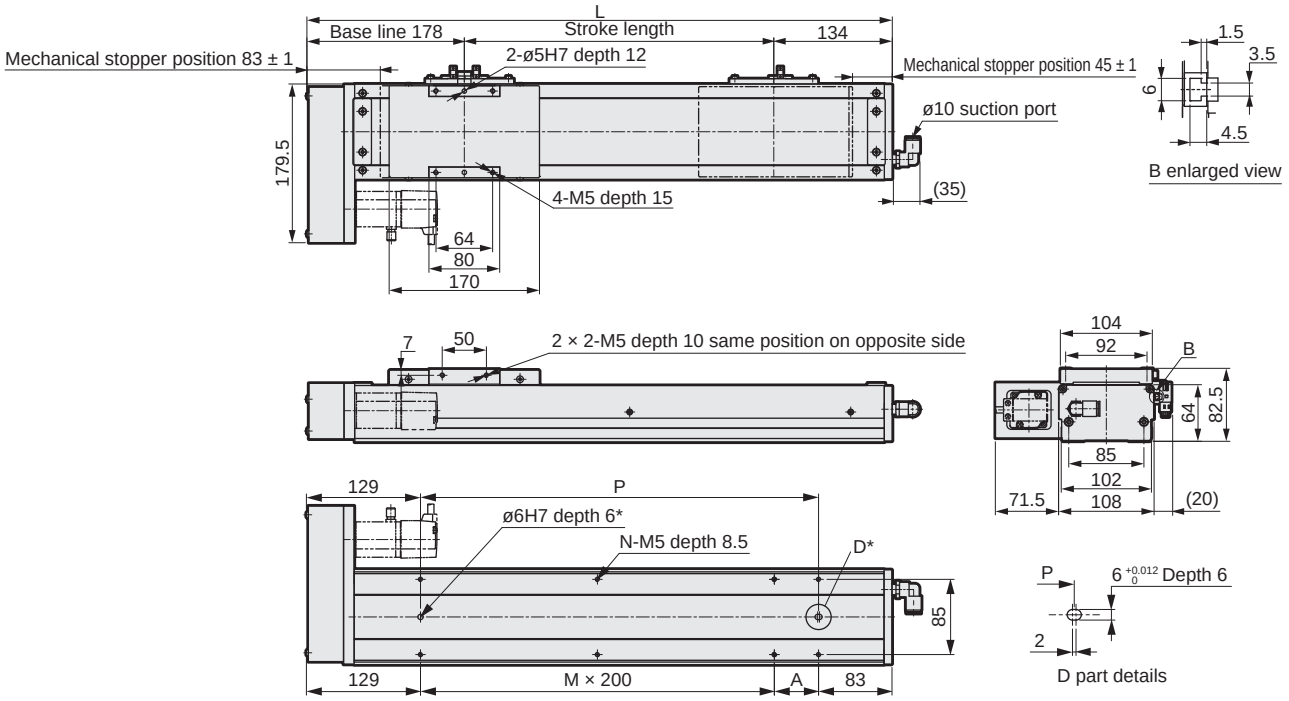

*Positioning pin hole (option)

Stroke length (mm)	50	100	150	200	250	300	350	400	450	500	550	600	650	700	750	800	850	900	950	1000	1050
L	362	412	462	512	562	612	662	712	762	812	862	912	962	1012	1062	1112	1162	1212	1262	1312	1362
A	150	200	50	100	150	200	50	100	150	200	50	100	150	200	50	100	150	200	50	100	150
M	0	0	1	1	1	1	2	2	2	2	3	3	3	3	4	4	4	4	5	5	5
N	4	4	6	6	6	6	8	8	8	8	10	10	10	10	12	12	12	12	14	14	14
P	150	200	250	300	350	400	450	500	550	600	650	700	750	800	850	900	950	1000	1050	1100	1150
Weight (kg)	6.4	6.9	7.3	7.7	8.2	8.6	9.0	9.4	9.9	10.3	10.7	11.1	11.6	12.0	12.4	12.8	13.3	13.7	14.1	14.5	15.0

Motor mounting part

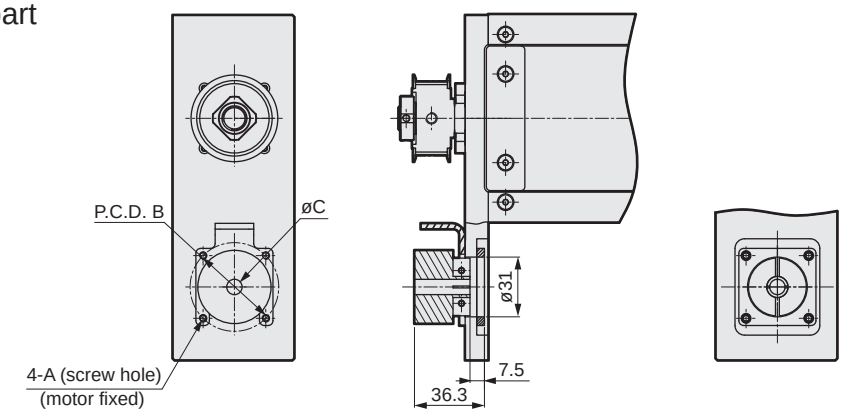

Mounted motor specification		A	B	C	Motor mounting bolt
M	100 W	M4	ø46	ø8	4-M4 × L16
Y	100 W	M4	ø46	ø8	4-M4 × L16
P	100 W	M3	ø45	ø8	4-M3 × L16
F	100 W	M4	ø46	ø8	4-M4 × L16

List of attachments

[Motor mounting parts]

Mounted motor specification	Timing belt, pulley	Fitting	Motor capacity	Motor mounting bolt	
				Size	Quantity
M	Included at shipment	Included at shipment	100 W	M4	2
Y				M4	2
P				M3	4
F				M4	2

*Refer to page 338 for fitting details.

[Origin sensor/Limit sensor]

Manufacturer	Model	Quantity
OMRON Corporation	EE-SX672	3

*Refer to page 334 for sensor specifications.

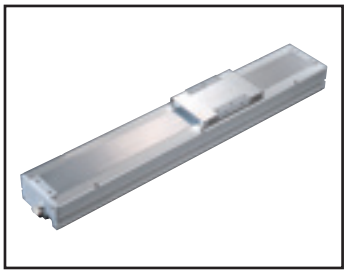

Electric actuator Ball screw drive Slider Low dust specification

ECS-14 Series

Straight motor mounting, built-in mounting

● Servo motor capacity: 200 W/400 W

How to order

ECS - 14 - 05 - 040 - E M 2 N N N N P

(A) (B) (C) (D) (E) (F) (G) (H) (I) (J) (K)

(A) Body size

14	Body width 135 mm

(B) Screw lead

05	5 mm
10	10 mm
16	16 mm
20	20 mm

(C) Stroke length

005 to 105	50 mm (In 50 mm increments) 1050 mm

(D) Motor mounting direction *1

E	Straight mounting
B	Built-in mounting

(E) Mounted motor specification

M	Select the mounted motor specification from the table below.
Y	
P	
F	

(F) Motor capacity

2	200 W
4	400 W

(G) Brake *1

N	None
B	Yes

(H) Origin sensor (1 pc) *2 *3 *4

N	None
A	Inside motor side
B	Inside motor opposite side
C	Outside motor side
D	Outside motor opposite side

(I) Limit sensor (2 pcs) *2 *3 *4

N	None
A	Inside
B	Outside

(J) Grease nipple *4 *5

N	None (Body mounting direction: Standard)
R	Right
L	Left

(K) Positioning pin hole

N	None
P	Yes

Manufacturer	200 W	400 W
Mitsubishi Electric Corporation	M	M
Delta Electronics Co., Ltd.	M	M
Sanyo Denki Co., Ltd.	M	M
YASKAWA Electric Corporation	Y	Y
Keyence Corporation	Y	Y
Panasonic Corporation	P	P
OMRON Corporation	P	P
Fuji Electric Co., Ltd.	M	M
FANUC CORPORATION	F	F
Bosch Rexroth AG	P	P
Rockwell Automation, Inc.	M	M
SIEMENS AG	M	M

* Refer to page 275 for the motor model No.

*1: "Yes" to the Brake can be selected only when the motor mounting method is built-in mounting.
*2: Origin sensor and limit sensor are available as a set. As it is both-or-nothing, select "None" for both.
*3: For sensor inside mounting, the user cannot adjust the position. (Assembled at shipment)
For sensor outside mounting, the user can adjust the position. (Included at shipment)
*4: Contact CKD to use the origin sensor, limit sensor and grease nipple in the same direction.
*5: "Body mounting direction: Standard" here refers to mounting from the bottom side.

Specifications

Applicable motor capacity		200 W/400 W servo motor			
Drive method		Ball screw ø16			
Ball screw accuracy grade		C7			
Stroke length	mm	50 to 1050			
Screw lead	mm	5	10	16	20
Max. load capacity *1	Horizontal 200 W kg	95	75	44	35
	Horizontal 400 W kg	110	88	48	40
	Vertical 200 W kg	27	18	7	6
	Vertical 400 W kg	33	22	10	8
Max. speed	mm/s	250	500	800	1000
Rated thrust *1	200 W N	683	341	213	174
	400 W N	1388	694	433	347
Repeatability	mm	±0.01			
Lost motion	mm	0.1 or less			
Dynamic allowable load	N	6567			
Static allowable moment	N·m	MP: 552, MY: 551, MR: 485			
Dynamic allowable moment	N·m	MP: 262.7, MY: 262.7, MR: 261.8			
Operating ambient temperature, humidity		0 to 40°C (no freezing) 35 to 80% RH (no condensation)			
Storage ambient temperature, humidity		-10 to 50°C (no freezing) 35 to 80% RH (no condensation)			
Atmosphere		No corrosive gas, explosive gas, or dust			

*1 Rated thrust and max. load capacity are guideline values assuming that the motor mounted will output the rated torque.

Stroke and max. speed

(mm/s)

Stroke length / Screw lead	100 to 750	800	850	900	950	1050
5	250	225	200	175	150	125
10	500	450	400	350	300	250
16	800	720	640	560	480	400
20	1000	900	800	700	600	500

*The max. speed is the speed when the motor mounted by the customer can output a rotation speed of 3000 rpm.
The max. speed is restricted by the stroke. Do not move at speeds beyond the limit.

Allowable overhang length

*Refer to page 330 for details.

Moment direction

MP MY MR

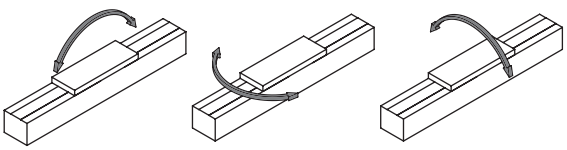

Dimensions Straight motor mounting

● ECS-14-*****-E

· Refer to page 336 for grease nipple dimensions.

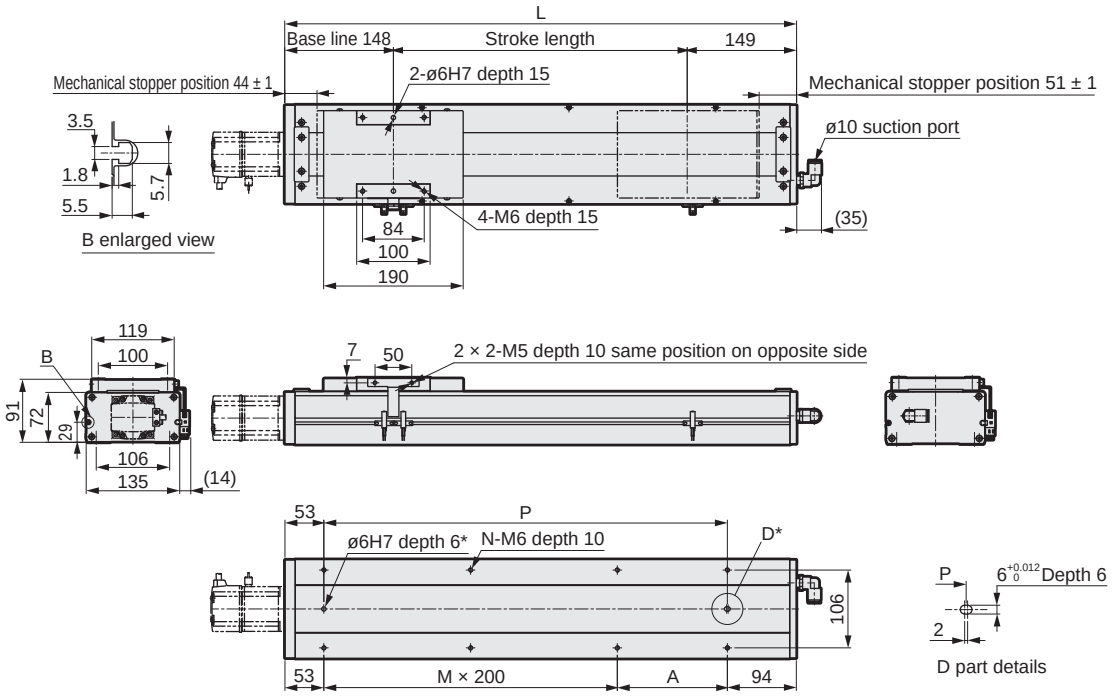

*Positioning pin hole (option)

Stroke length (mm)	50	100	150	200	250	300	350	400	450	500	550	600	650	700	750	800	850	900	950	1000	1050
L	347	397	447	497	547	597	647	697	747	797	847	897	947	997	1047	1097	1147	1197	1247	1297	1347
A	200	50	100	150	200	50	100	150	200	50	100	150	200	50	100	150	200	50	100	150	200
M	0	1	1	1	1	2	2	2	2	3	3	3	3	4	4	4	4	5	5	5	5
N	4	6	6	6	6	8	8	8	8	10	10	10	10	12	12	12	12	14	14	14	14
P	200	250	300	350	400	450	500	550	600	650	700	750	800	850	900	950	1000	1050	1100	1150	1200
Weight (kg)	10.5	11.1	11.7	12.3	12.9	13.5	14.1	14.7	15.3	15.9	16.5	17.1	17.7	18.3	18.9	19.5	20.1	20.7	21.3	21.9	22.5

Motor mounting part

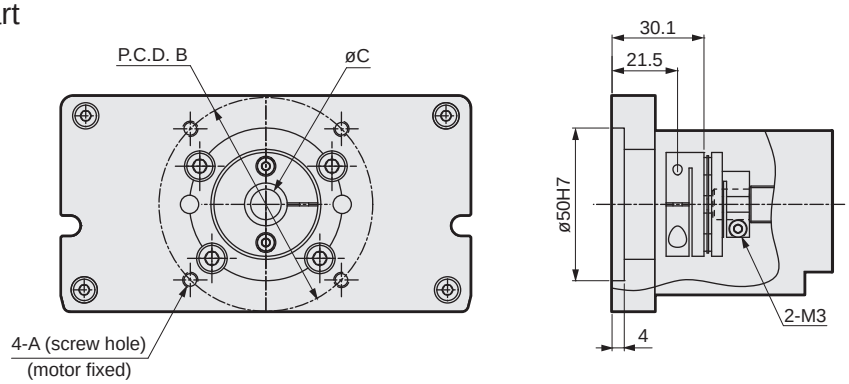

Mounted motor specification		A	B	C	Motor mounting bolt
M	200 W/400 W	M5	ø70	ø14	4-M5 × L18
Y	200 W/400 W	M5	ø70	ø14	4-M5 × L18
P	200 W/400 W	M4	ø70	ø11/ø14	4-M4 × L18
F	200 W/400 W	M5	ø70	ø9/ø14	4-M5 × L16/4-M5 × L18

List of attachments

[Motor mounting parts]

Mounted motor specification	Coupling	Fitting	Motor capacity	Motor mounting bolt	
				Size	Quantity
M	Assembled at shipment	Included at shipment	200 W/ 400 W	M5	4
Y				M5	4
P				M4	4
F				M5	4

*Refer to page 338 for fitting details.

[Origin sensor/Limit sensor]

Manufacturer	Model	Quantity
OMRON Corporation	EE-SX672	3

*Refer to page 334 for sensor specifications.

Dimensions Motor built-in mounting

● ECS-14-*****-B

· Refer to page 336 for grease nipple dimensions.

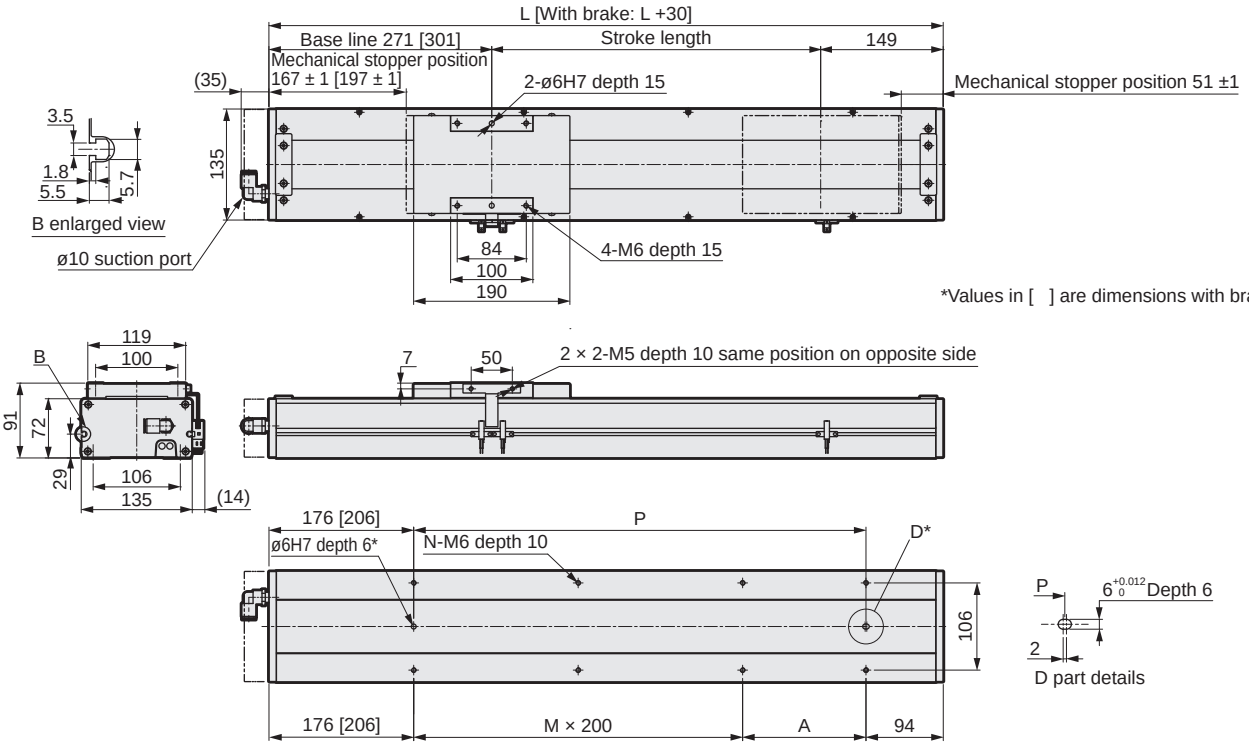

*Values in [ ] are dimensions with brake.

*Positioning pin hole (option)

Stroke length (mm)	50	100	150	200	250	300	350	400	450	500	550	600	650	700	750	800	850	900	950	1000	1050
L	470	520	570	620	670	720	770	820	870	920	970	1020	1070	1120	1170	1220	1270	1320	1370	1420	1470
A	200	50	100	150	200	50	100	150	200	50	100	150	200	50	100	150	200	50	100	150	200
M	0	1	1	1	1	2	2	2	2	3	3	3	3	4	4	4	4	5	5	5	5
N	4	6	6	6	6	8	8	8	8	10	10	10	10	12	12	12	12	14	14	14	14
P	200	250	300	350	400	450	500	550	600	650	700	750	800	850	900	950	1000	1050	1100	1150	1200
Weight (kg)	11.5	12.1	12.7	13.3	13.9	14.5	15.1	15.7	16.3	16.9	17.5	18.1	18.7	19.3	19.9	20.5	21.1	21.7	22.3	22.9	23.5

Motor mounting part

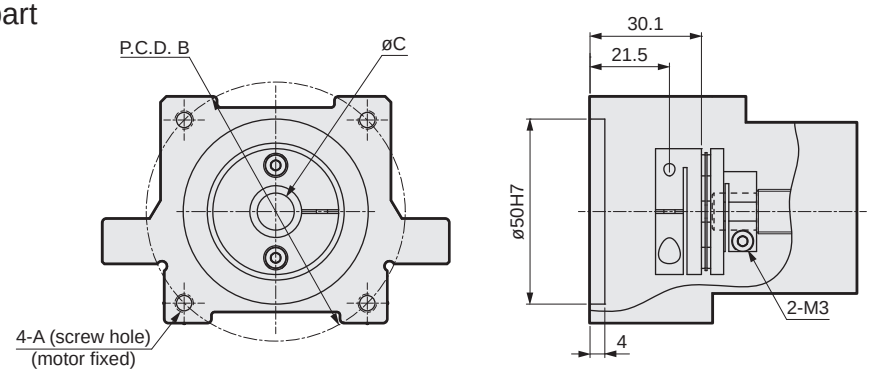

Mounted motor specification		A	B	C	Motor mounting bolt
M	200 W/400 W	M5	ø70	ø14	4-M5 × L18
Y	200 W/400 W	M5	ø70	ø14	4-M5 × L18
P	200 W/400 W	M4	ø70	ø11/ø14	4-M4 × L18

List of attachments

[Motor mounting parts]

Mounted motor specification	Coupling	Fitting	Motor capacity	Motor mounting bolt	
				Size	Quantity
M	Assembled at shipment	Included at shipment	200 W/ 400 W	M5	4
Y				M5	4
P				M4	4

*Refer to page 338 for fitting details.

[Origin sensor/Limit sensor]

Manufacturer	Model	Quantity
OMRON Corporation	EE-SX672	3

*Refer to page 334 for sensor specifications.

MEMO



Electric actuator Ball screw drive Slider Low dust specification

ECS-14 Series

Motor side mounting (left, right, bottom)

● Servo motor capacity: 200 W/400 W

How to order

ECS - 14 - 05 - 050 - R M 2 N N N N P

(A) (B) (C) (D) (E) (F) (G) (H) (I) (J) (K)

(A) Body size

14	Body width 135 mm

(B) Screw lead

05	5 mm
10	10 mm
16	16 mm
20	20 mm

(C) Stroke length

005 to 105	50 mm (In 50 mm increments) 1050 mm

(D) Motor mounting direction *5

R	Right mounting
D	Bottom mounting
L	Left mounting

(E) Mounted motor specification

M Y P F	Select the mounted motor specification from the table below.

(F) Motor capacity

2	200 W
4	400 W

(G) Brake

N	None

(H) Origin sensor (1 pc) *1 *2 *3

N	None
A	Inside motor side
B	Inside motor opposite side
C	Outside motor side
D	Outside motor opposite side

(I) Limit sensor (2 pcs) *1 *2 *3

N	None
A	Inside
B	Outside

(J) Grease nipple *3 *4 *5

N	None (Body mounting direction: Standard)
R	Right
L	Left

(K) Positioning pin hole

N	None
P	Yes

Manufacturer	200 W	400 W
Mitsubishi Electric Corporation	M	M
Delta Electronics Co., Ltd.	M	M
Sanyo Denki Co., Ltd.	M	M
YASKAWA Electric Corporation	Y	Y
Keyence Corporation	Y	Y
Panasonic Corporation	P	P
OMRON Corporation	P	P
Fuji Electric Co., Ltd.	M	M
FANUC CORPORATION	F	F
Bosch Rexroth AG	P	P
Rockwell Automation, Inc.	M	M
SIEMENS AG	M	M

* Refer to page 275 for the motor model No.

*1: Origin sensor and limit sensor are available as a set. As it is both-or-nothing, select "None" for both.
*2: For sensor inside mounting, the user cannot adjust the position. (Assembled at shipment)
For sensor outside mounting, the user can adjust the position. (Included at shipment)
*3: Contact CKD to use the origin sensor, limit sensor and grease nipple in the same direction.
*4: "Body mounting direction: Standard" here refers to mounting from the bottom side.
*5: When selecting motor mounting direction R, grease nipple R cannot be selected.
When selecting L, grease nipple L cannot be selected.

Specifications

Applicable motor capacity		200 W/400 W servo motor			
Drive method		Ball screw ø16			
Ball screw accuracy grade		C7			
Stroke length	mm	50 to 1050			
Screw lead	mm	5	10	16	20
Max. load capacity *1	Horizontal 200 W kg	95	75	44	35
	Horizontal 400 W kg	110	88	48	40
	Vertical 200 W kg	27	18	7	6
	Vertical 400 W kg	33	22	10	8
Max. speed	mm/s	250	500	800	1000
Rated thrust *1	200 W N	683	341	213	174
	400 W N	1388	694	433	347
Repeatability	mm	±0.01			
Lost motion	mm	0.1 or less			
Dynamic allowable load	N	6567			
Static allowable moment	N·m	MP: 552, MY: 551, MR: 485			
Dynamic allowable moment	N·m	MP: 262.7, MY: 262.7, MR: 261.0			
Operating ambient temperature, humidity		0 to 40°C (no freezing) 35 to 80% RH (no condensation)			
Storage ambient temperature, humidity		-10 to 50°C (no freezing) 35 to 80% RH (no condensation)			
Atmosphere		No corrosive gas, explosive gas, or dust			

*1 Rated thrust and max. load capacity are guideline values assuming that the motor mounted will output the rated torque.

Stroke and max. speed

(mm/s)

Screw lead \ Stroke length	100 to 750	800	850	900	950	1050
5	250	225	200	175	150	125
10	500	450	400	350	300	250
16	800	720	640	560	480	400
20	1000	900	800	700	600	500

*The max. speed is the speed when the motor mounted by the customer can output a rotation speed of 3000 rpm.
The max. speed is restricted by the stroke. Do not move at speeds beyond the limit.

Allowable overhang length

*Refer to page 330 for details.

Moment direction

MP MY MR

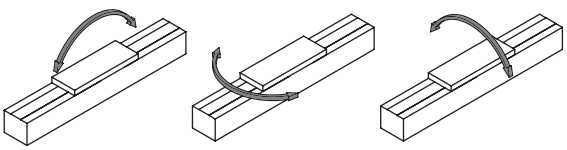

Dimensions Motor right-side mounting

● ECS-14-*****-R

· Refer to page 336 for grease nipple dimensions.

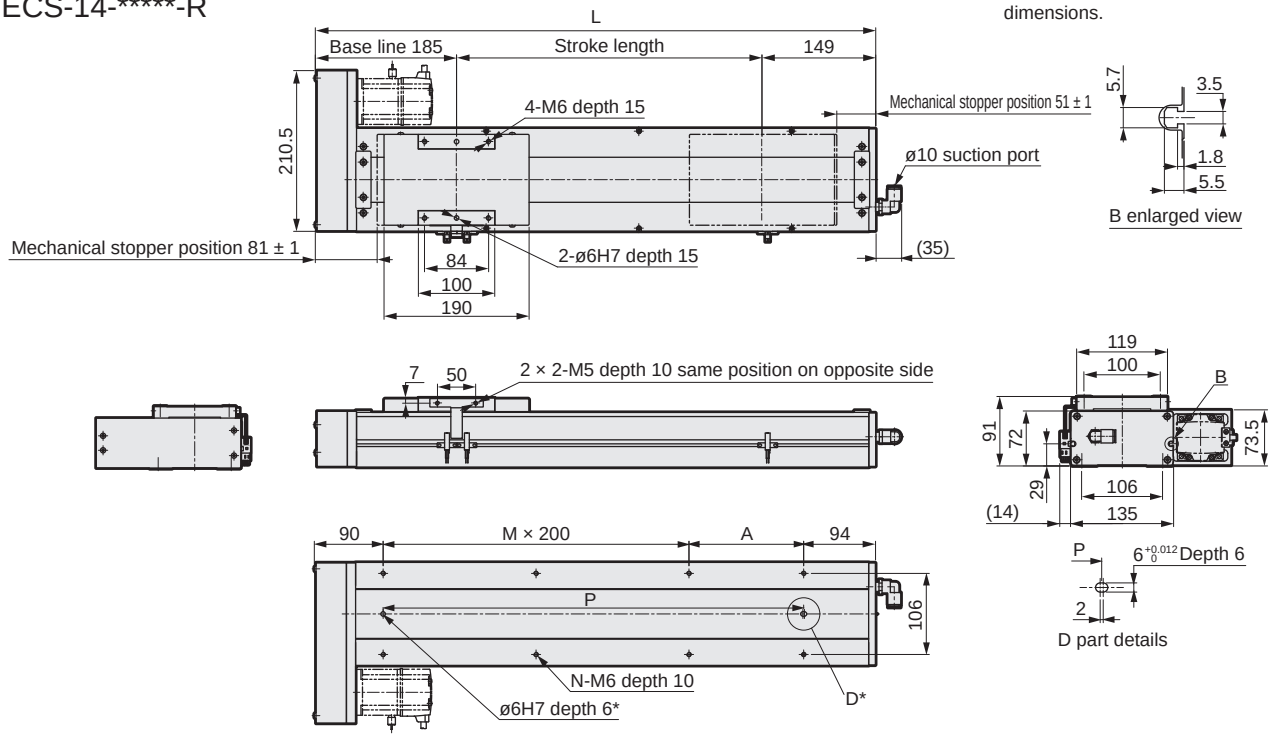

*Positioning pin hole (option)

Stroke length (mm)	50	100	150	200	250	300	350	400	450	500	550	600	650	700	750	800	850	900	950	1000	1050
L	384	434	484	534	584	634	684	734	784	834	884	934	984	1034	1084	1134	1184	1234	1284	1334	1384
A	200	50	100	150	200	50	100	150	200	50	100	150	200	50	100	150	200	50	100	150	200
M	0	1	1	1	1	2	2	2	2	3	3	3	3	4	4	4	4	5	5	5	5
N	4	6	6	6	6	8	8	8	8	10	10	10	10	12	12	12	12	14	14	14	14
P	200	250	300	350	400	450	500	550	600	650	700	750	800	850	900	950	1000	1050	1100	1150	1200
Weight (kg)	11.0	11.6	12.2	12.8	13.4	14.0	14.7	15.3	15.9	16.5	17.1	17.8	18.4	19.0	19.6	20.2	20.9	21.5	22.1	22.7	23.3

Motor mounting part

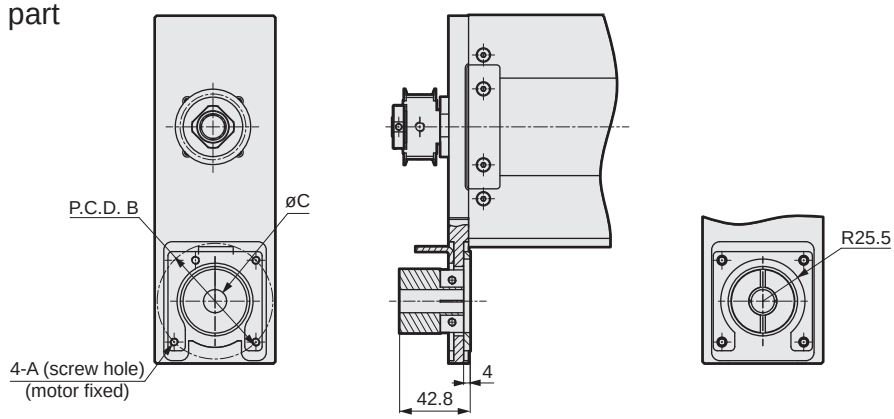

Mounted motor specification		A	B	C	Motor mounting bolt
M	200 W/400 W	M5	ø70	ø14	4-M5 × L18
Y	200 W/400 W	M5	ø70	ø14	4-M5 × L18
P	200 W/400 W	M4	ø70	ø11/ø14	4-M4 × L18
F	200 W/400 W	M5	ø70	ø9/ø14	4-M5 × L18

List of attachments

[Motor mounting parts]

Mounted motor specification	Timing belt, pulley	Fitting	Motor capacity	Motor mounting bolt	
				Size	Quantity
M	Included at shipment	Included at shipment	200 W/ 400 W	M5	4
Y				M5	4
P				M4	4
F				M5	4

*Refer to page 338 for fitting details.

[Origin sensor/Limit sensor]

Manufacturer	Model	Quantity
OMRON Corporation	EE-SX672	3

*Refer to page 334 for sensor specifications.

Dimensions Motor bottom mounting

● ECS-14-*****-D

· Refer to page 336 for grease nipple dimensions.

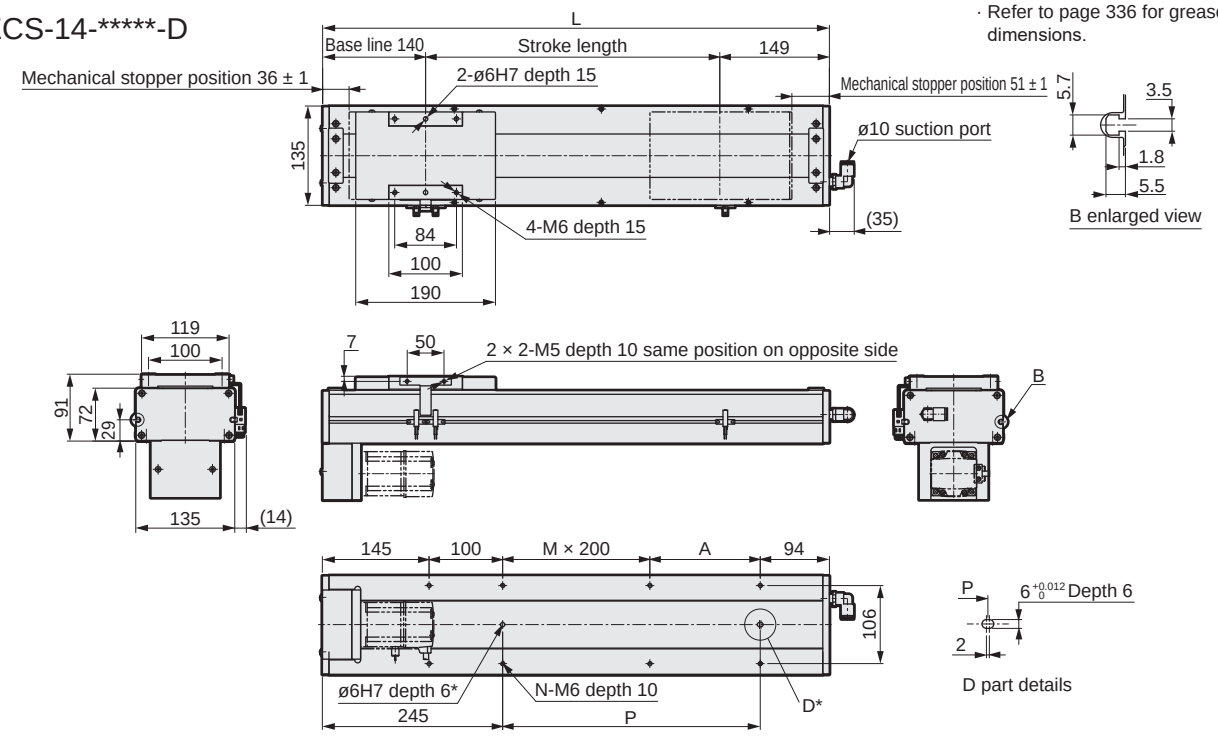

*Positioning pin hole (option)
Round positioning pin holes are available only for stroke 50

Stroke length (mm)	50	100	150	200	250	300	350	400	450	500	550	600	650	700	750	800	850	900	950	1000	1050
L	339	389	439	489	539	589	639	689	739	789	839	889	939	989	1039	1089	1139	1189	1239	1289	1339
A	0	50	100	150	200	50	100	150	200	50	100	150	200	50	100	150	200	50	100	150	200
M	0	0	0	0	0	1	1	1	1	2	2	2	2	3	3	3	3	4	4	4	4
N	4	6	6	6	6	8	8	8	8	10	10	10	10	12	12	12	12	14	14	14	14
P	0	50	100	150	200	250	300	350	400	450	500	550	600	650	700	750	800	850	900	950	1000
Weight (kg)	11.0	11.6	12.2	12.8	13.4	14.0	14.7	15.3	15.9	16.5	17.1	17.8	18.4	19.0	19.6	20.2	20.9	21.5	22.1	22.7	23.3

Motor mounting part

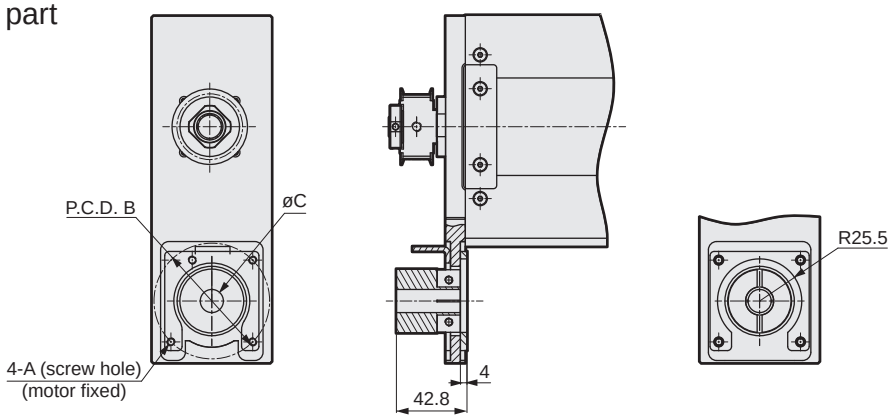

Mounted motor specification		A	B	C	Motor mounting bolt
M	200 W/400 W	M5	ø70	ø14	4-M5 × L18
Y	200 W/400 W	M5	ø70	ø14	4-M5 × L18
P	200 W/400 W	M4	ø70	ø11/ø14	4-M4 × L18
F	200 W/400 W	M5	ø70	ø9/ø14	4-M5 × L18

List of attachments

[Motor mounting parts]

Mounted motor specification	Timing belt, pulley	Fitting	Motor capacity	Motor mounting bolt	
				Size	Quantity
M	Included at shipment	Included at shipment	200 W/ 400 W	M5	4
Y				M5	4
P				M4	4
F				M5	4

*Refer to page 338 for fitting details.

[Origin sensor/Limit sensor]

Manufacturer	Model	Quantity
OMRON Corporation	EE-SX672	3

*Refer to page 334 for sensor specifications.

Dimensions Motor left-side mounting

● ECS-14-*****-L

· Refer to page 336 for grease nipple dimensions.

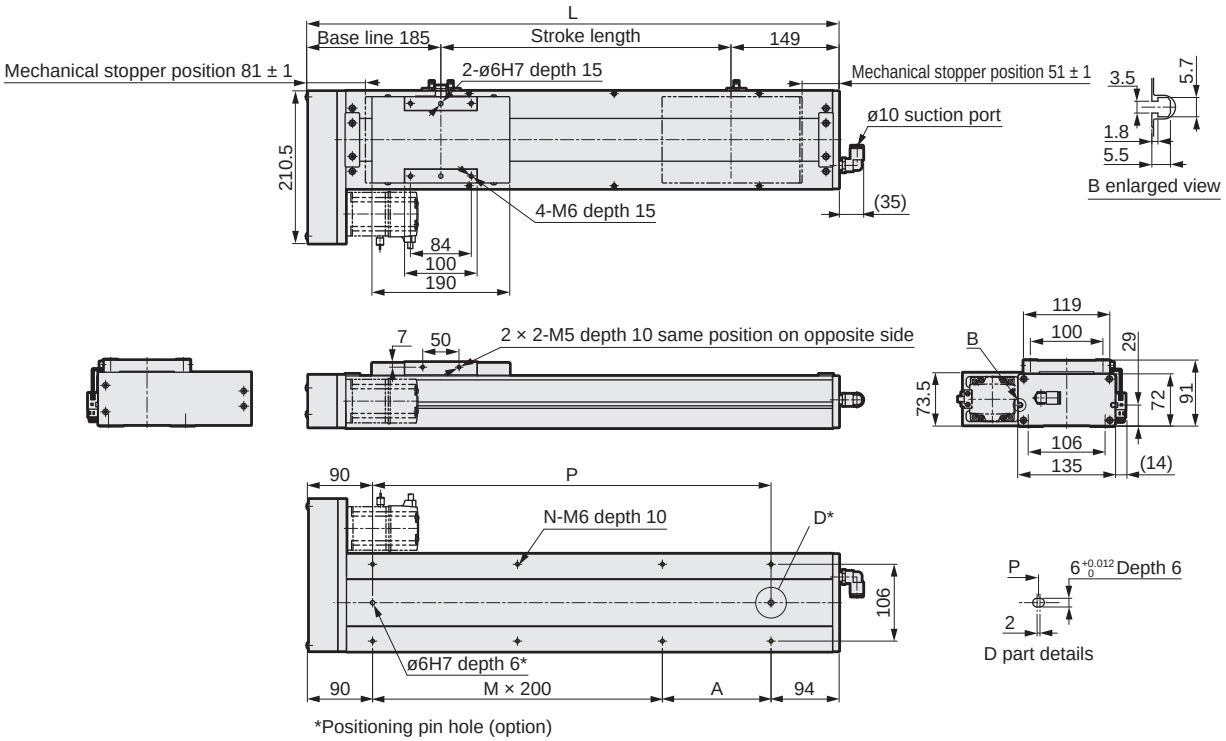

*Positioning pin hole (option)

Stroke length (mm)	50	100	150	200	250	300	350	400	450	500	550	600	650	700	750	800	850	900	950	1000	1050
L	384	434	484	534	584	634	684	734	784	834	884	934	984	1034	1084	1134	1184	1234	1284	1334	1384
A	200	50	100	150	200	50	100	150	200	50	100	150	200	50	100	150	200	50	100	150	200
M	0	1	1	1	1	2	2	2	2	3	3	3	3	4	4	4	4	5	5	5	5
N	4	6	6	6	6	8	8	8	8	10	10	10	10	12	12	12	12	14	14	14	14
P	200	250	300	350	400	450	500	550	600	650	700	750	800	850	900	950	1000	1050	1100	1150	1200
Weight (kg)	11.0	11.6	12.2	12.8	13.4	14.0	14.7	15.3	15.9	16.5	17.1	17.8	18.4	19.0	19.6	20.2	20.9	21.5	22.1	22.7	23.3

Motor mounting part

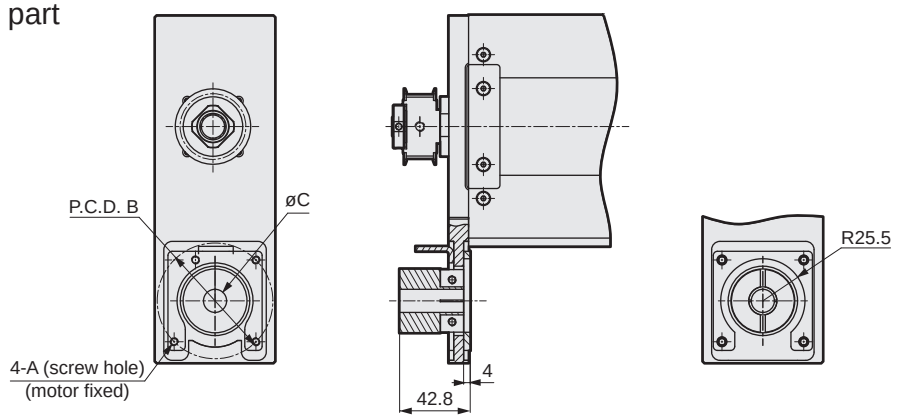

Mounted motor specification		A	B	C	Motor mounting bolt
M	200 W/400 W	M5	ø70	ø14	4-M5 × L18
Y	200 W/400 W	M5	ø70	ø14	4-M5 × L18
P	200 W/400 W	M4	ø70	ø11/ø14	4-M4 × L18
F	200 W/400 W	M5	ø70	ø9/ø14	4-M5 × L18

List of attachments

[Motor mounting parts]

Mounted motor specification	Timing belt, pulley	Fitting	Motor capacity	Motor mounting bolt	
				Size	Quantity
M	Included at shipment	Included at shipment	200 W/ 400 W	M5	4
Y				M5	4
P				M4	4
F				M5	4

*Refer to page 338 for fitting details.

[Origin sensor/Limit sensor]

Manufacturer	Model	Quantity
OMRON Corporation	EE-SX672	3

*Refer to page 334 for sensor specifications.

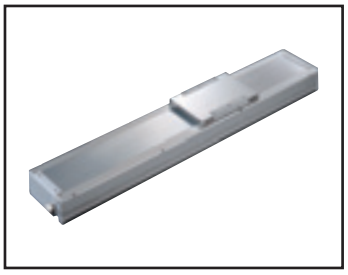

Electric actuator Ball screw drive Slider Low dust specification

ECS-17 Series

Straight motor mounting, built-in mounting

● Servo motor capacity: 400 W/750 W

How to order

ECS - 17 - 05 040 - E M 4 N N N N P

(A) (B) (C) (D) (E) (F) (G) (H) (I) (J) (K)

(A) Body size

17	Body width 170 mm

(B) Screw lead

05	5 mm
10	10 mm
20	20 mm
40	40 mm

(C) Stroke length

005 to 125	50 mm (In 50 mm increments) 1250 mm

(D) Motor mounting direction *1 *2

E	Straight mounting
B	Built-in mounting

(E) Mounted motor specification

M, Y, P, F	Select the mounted motor specification from the table below.

(F) Motor capacity *1

4	400 W
8	750 W

(G) Brake *2

N	None
B	Yes

(H) Origin sensor (1 pc) *3 *4 *5

N	None
A	Inside motor side
B	Inside motor opposite side
C	Outside motor side
D	Outside motor opposite side

(I) Limit sensor (2 pcs) *3 *4 *5

N	None
A	Inside
B	Outside

(J) Grease nipple *5 *6

N	None (Body mounting direction: Standard)
R	Right
L	Left

(K) Positioning pin hole

N	None
P	Yes

Manufacturer	400 W	750 W
Mitsubishi Electric Corporation	M	M
Delta Electronics Co., Ltd.	M	M
Sanyo Denki Co., Ltd.	M	-
YASKAWA Electric Corporation	Y	Y
Keyence Corporation	Y	Y
Panasonic Corporation	P	P
OMRON Corporation	P	P
Fuji Electric Co., Ltd.	M	M
FANUC CORPORATION	F	F
Bosch Rexroth AG	P	P
Rockwell Automation, Inc.	M	M
SIEMENS AG	M	M

* Refer to page 275 for the motor model No.

*1: The built-in mounting motor mounting method cannot be selected for the 750 W motor capacity.
*2: "Yes" to the Brake can be selected only when the motor mounting method is built-in mounting.
*3: Origin sensor and limit sensor are available as a set. As it is both-or-nothing, select "None" for both.
*4: For sensor inside mounting, the user cannot adjust the position. (Assembled at shipment)
For sensor outside mounting, the user can adjust the position. (Included at shipment)
*5: Contact CKD to use the origin sensor, limit sensor and grease nipple in the same direction.
*6: "Body mounting direction: Standard" here refers to mounting from the bottom side.

Specifications

Applicable motor capacity		400 W/750 W servo motor			
Drive method		Ball screw ø20			
Ball screw accuracy grade		C7			
Stroke length	mm	50 to 1250			
Screw lead	mm	5	10	20	40
Max. load capacity *1	Horizontal 400 W kg	120	110	75	35
	Horizontal 750 W kg	120	120	83	50
	Vertical 400 W kg	40	30	14	7
	Vertical 750 W kg	50	40	25	10
Max. speed	mm/s	250	500	1000	2000
Rated thrust *1	400 W N	1388	694	347	174
	750 W N	2100	1050	525	260
Repeatability	mm	±0.01			
Lost motion	mm	0.1 or less			
Dynamic allowable load	N	10102			
Static allowable moment	N·m	MP: 1034, MY: 1032, MR: 908			
Dynamic allowable moment	N·m	MP: 424.3, MY: 424.3, MR: 520.3			
Operating ambient temperature, humidity		0 to 40°C (no freezing) 35 to 80% RH (no condensation)			
Storage ambient temperature, humidity		-10 to 50°C (no freezing) 35 to 80% RH (no condensation)			
Atmosphere		No corrosive gas, explosive gas, or dust			

*1 Rated thrust and max. load capacity are guideline values assuming that the motor mounted will output the rated torque.

Stroke and max. speed

(mm/s)

Stroke length / Screw lead	100 to 850	950	1050	1150	1250
5	250	225	200	175	150
10	500	450	400	350	300
20	1000	900	800	700	600
40	2000	1800	1600	1400	1200

*The max. speed is the speed when the motor mounted by the customer can output a rotation speed of 3000 rpm.
The max. speed is restricted by the stroke. Do not move at speeds beyond the limit.

Allowable overhang length

*Refer to page 330 for details.

Moment direction

MP MY MR

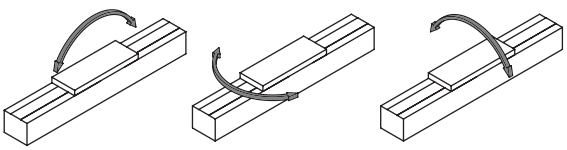

Dimensions Straight motor mounting

● ECS-17-*****-E

· Refer to page 336 for grease nipple dimensions.

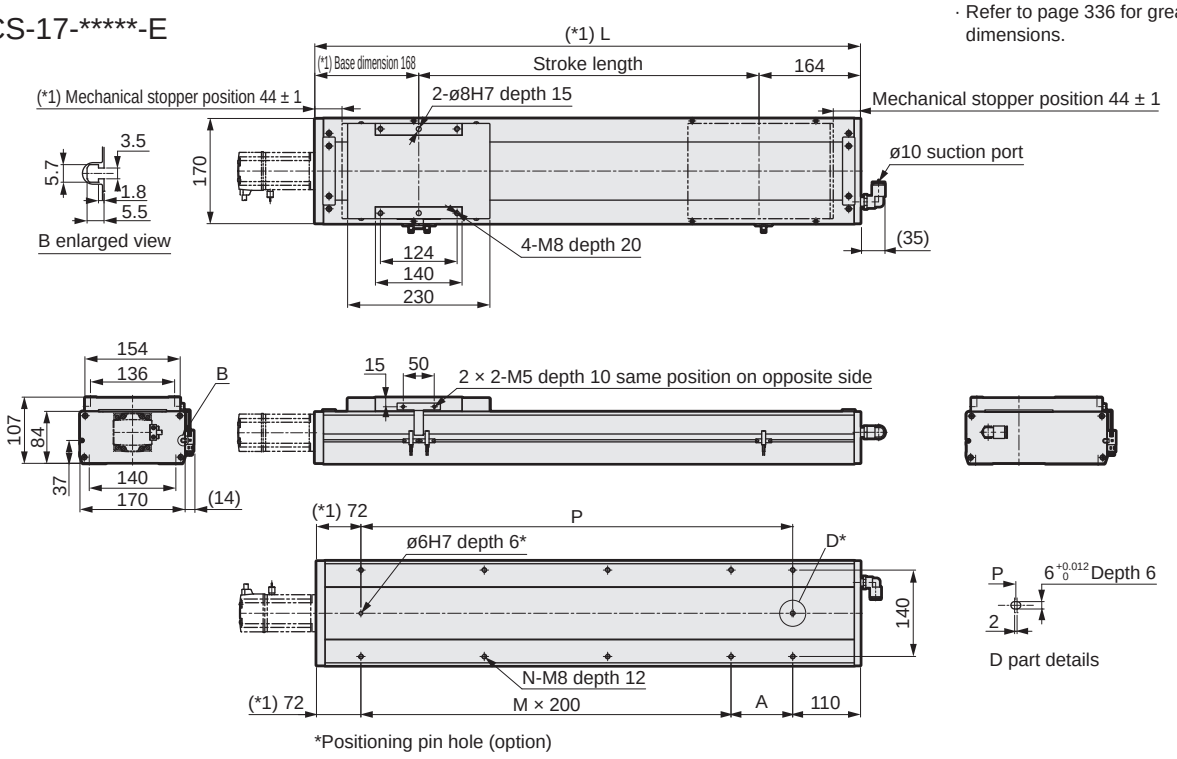

*Positioning pin hole (option)

Stroke length (mm)	50	100	150	200	250	300	350	400	450	500	550	600	650	700	750	800	850	900	950	1000	1050	1100	1150	1200	1250
L (*1)	382	432	482	532	582	632	682	732	782	832	882	932	982	1032	1082	1132	1182	1232	1282	1332	1382	1432	1482	1532	1582
A	200	50	100	150	200	50	100	150	200	50	100	150	200	50	100	150	200	50	100	150	200	50	100	150	200
M	0	1	1	1	1	2	2	2	2	3	3	3	3	4	4	4	4	5	5	5	5	6	6	6	6
N	4	6	6	6	6	8	8	8	8	10	10	10	10	12	12	12	12	14	14	14	14	16	16	16	16
P	200	250	300	350	400	450	500	550	600	650	700	750	800	850	900	950	1000	1050	1100	1150	1200	1250	1300	1350	1400
Weight (kg)	12.0	12.7	13.4	14.2	15.0	15.8	16.6	17.3	18.1	18.9	19.7	20.5	21.2	22.0	22.8	23.6	24.4	25.1	25.9	26.7	27.5	28.3	29.0	29.8	30.6

(*1) The 750 W motor capacity is +10 mm.

Motor mounting part

● ECS-17-400W-E

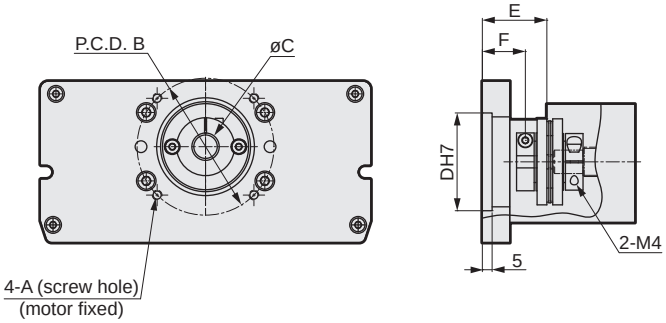

● ECS-17-750W-E

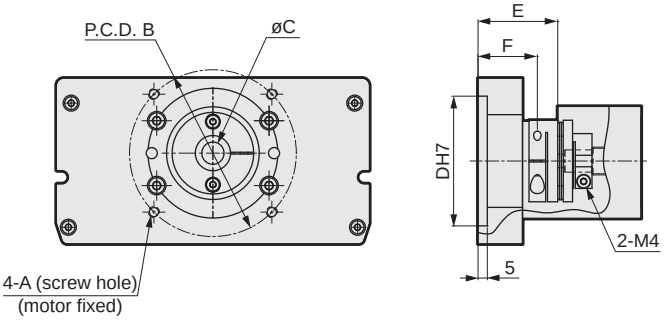

Mounted motor specification		A	B	C	D	E	F	Motor mounting bolt
M	400 W/750 W	M5/M6	ø70/ø90	ø14/ø19	ø50/ø70	33/43	22/32	4-M5 × L18/4-M6 × L20
Y	400 W/750 W	M5/M6	ø70/ø90	ø14/ø19	ø50/ø70	33/43	22/32	4-M5 × L18/4-M6 × L20
P	400 W/750 W	M4/M5	ø70/ø90	ø14/ø19	ø50/ø70	33/43	22/32	4-M4 × L18/4-M5 × L20
F	400 W/750 W	M5/M6	ø70/ø100	ø14/ø14	ø50/ø80	33/29	22/18	4-M5 × L18/4-M6 × L20

List of attachments

[Motor mounting parts]

Mounted motor specification	Coupling	Fitting	Motor capacity	Motor mounting bolt	
				Size	Quantity
M	Assembled at shipment	Included at shipment	400 W/ 750 W	M5/M6	4
Y				M5/M6	4
P				M4/M5	4
F				M5/M6	4

*Refer to page 338 for fitting details.

[Origin sensor/Limit sensor]

Manufacturer	Model	Quantity
OMRON Corporation	EE-SX672	3

*Refer to page 334 for sensor specifications.

Dimensions Motor built-in mounting

● ECS-17-*****-B

· Refer to page 336 for grease nipple dimensions.

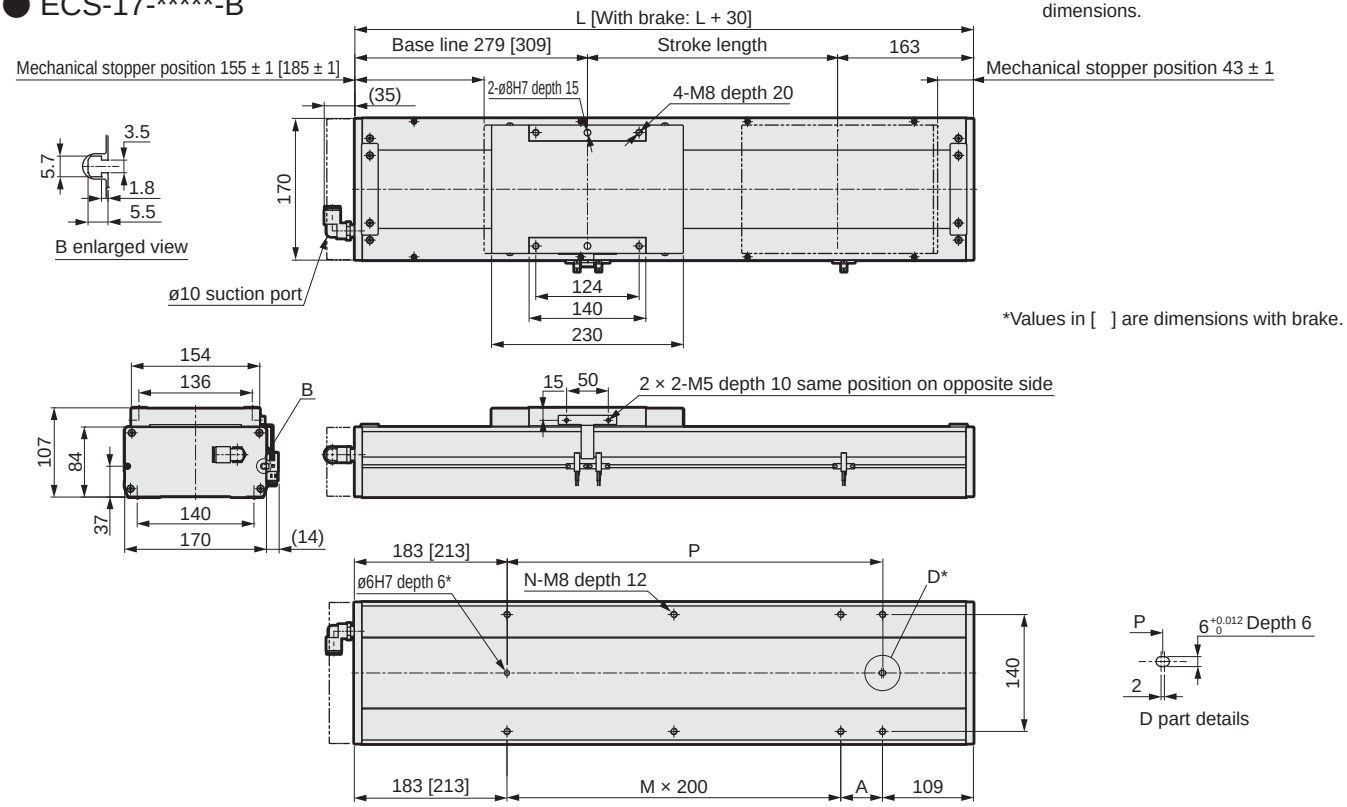

*Positioning pin hole (option)

Stroke length (mm)	50	100	150	200	250	300	350	400	450	500	550	600	650	700	750	800	850	900	950	1000	1050	1100	1150	1200	1250
L	492	542	592	642	692	742	792	842	892	942	992	1042	1092	1142	1192	1242	1292	1342	1392	1442	1492	1542	1592	1642	1692
A	200	50	100	150	200	50	100	150	200	50	100	150	200	50	100	150	200	50	100	150	200	50	100	150	200
M	0	1	1	1	1	2	2	2	2	3	3	3	3	4	4	4	4	5	5	5	5	6	6	6	6
N	4	6	6	6	6	8	8	8	8	10	10	10	10	12	12	12	12	14	14	14	14	16	16	16	16
P	200	250	300	350	400	450	500	550	600	650	700	750	800	850	900	950	1000	1050	1100	1150	1200	1250	1300	1350	1400
Weight (kg)	12.5	13.3	14.1	14.9	15.7	16.5	17.3	18.1	18.9	19.7	20.5	21.3	22.1	22.9	23.7	24.5	25.3	26.1	26.9	27.7	28.6	29.4	30.2	31.0	31.8

Motor mounting part

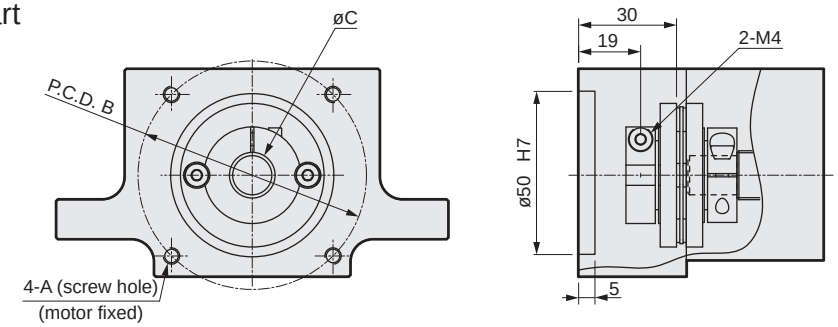

Mounted motor specification		A	B	C	Motor mounting bolt
M	400 W	M5	ø70	ø14	4-M5 × L18
Y	400 W	M5	ø70	ø14	4-M5 × L18
P	400 W	M4	ø70	ø14	4-M4 × L18

List of attachments

[Motor mounting parts]

Mounted motor specification	Coupling	Fitting	Motor capacity	Motor mounting bolt	
				Size	Quantity
M	Assembled at shipment	Included at shipment	400 W	M5	4
Y				M5	4
P				M4	4

*Refer to page 338 for fitting details.

[Origin sensor/Limit sensor]

Manufacturer	Model	Quantity
OMRON Corporation	EE-SX672	3

*Refer to page 334 for sensor specifications.

MEMO



Electric actuator Ball screw drive Slider Low dust specification

ECS-17 Series

Motor side mounting (left, right, bottom)

● Servo motor capacity: 400 W/750 W

How to order

ECS - 17 - 05 040 - R M 4 N N N N P

(A) (B) (C) (D) (E) (F) (G) (H) (I) (J) (K)

(A) Body size

17	Body width 170 mm

(B) Screw lead

05	5 mm
10	10 mm
20	20 mm
40	40 mm

(C) Stroke length

005 to 125	50 mm (In 50 mm increments) 1250 mm

(D) Motor mounting direction

R	Right mounting
D	Bottom mounting
L	Left mounting

(E) Mounted motor specification

M	Select the mounted motor specification from the table below.
Y	
P	
F	

(F) Motor capacity

4	400 W
8	750 W

(G) Brake

N	None

(H) Origin sensor (1 pc) *1 *2 *3

N	None
A	Inside motor side
B	Inside motor opposite side
C	Outside motor side
D	Outside motor opposite side

(I) Limit sensor (2 pcs) *1 *2 *3

N	None
A	Inside
B	Outside

(J) Grease nipple *3 *4 *5

N	None (Body mounting direction: Standard)
R	Right
L	Left

(K) Positioning pin hole

N	None
P	Yes

Manufacturer	400 W	750 W
Mitsubishi Electric Corporation	M	M
Delta Electronics Co., Ltd.	M	M
Sanyo Denki Co., Ltd.	M	-
YASKAWA Electric Corporation	Y	Y
Keyence Corporation	Y	Y
Panasonic Corporation	P	P
OMRON Corporation	P	P
Fuji Electric Co., Ltd.	M	M
FANUC CORPORATION	F	F
Bosch Rexroth AG	P	P
Rockwell Automation, Inc.	M	M
SIEMENS AG	M	M

* Refer to page 275 for the motor model No.

*1: Origin sensor and limit sensor are available as a set. As it is both-or-nothing, select "None" for both.
*2: For sensor inside mounting, the user cannot adjust the position. (Assembled at shipment)
For sensor outside mounting, the user can adjust the position. (Included at shipment)
*3: Contact CKD to use the origin sensor, limit sensor and grease nipple in the same direction.
*4: "Body mounting direction: Standard" here refers to mounting from the bottom side.
*5: When selecting motor mounting direction R, grease nipple R cannot be selected.
When selecting L, grease nipple L cannot be selected.

Specifications

Applicable motor capacity		400 W/750 W servo motor			
Drive method		Ball screw ø20			
Ball screw accuracy grade		C7			
Stroke length	mm	50 to 1250			
Screw lead	mm	5	10	20	40
Max. load capacity *1	Horizontal 400 W kg	120	110	75	35
	Horizontal 750 W kg	120	120	83	50
	Vertical 400 W kg	40	30	14	7
	Vertical 750 W kg	50	40	25	10
Max. speed	mm/s	250	500	1000	2000
Rated thrust *1	400 W N	1388	694	347	174
	750 W N	2100	1050	525	260
Repeatability	mm	±0.01			
Lost motion	mm	0.1 or less			
Dynamic allowable load	N	10102			
Static allowable moment	N·m	MP: 1034, MY: 1032, MR: 908			
Dynamic allowable moment	N·m	MP: 424.3, MY: 424.3, MR: 520.3			
Operating ambient temperature, humidity		0 to 40°C (no freezing) 35 to 80% RH (no condensation)			
Storage ambient temperature, humidity		-10 to 50°C (no freezing) 35 to 80% RH (no condensation)			
Atmosphere		No corrosive gas, explosive gas, or dust			

*1 Rated thrust and max. load capacity are guideline values assuming that the motor mounted will output the rated torque.

Stroke and max. speed

(mm/s)

Stroke length / Screw lead	100 to 850	950	1050	1150	1250
5	250	225	200	175	150
10	500	450	400	350	300
20	1000	900	800	700	600
40	2000	1800	1600	1400	1200

*The max. speed is the speed when the motor mounted by the customer can output a rotation speed of 3000 rpm.
The max. speed is restricted by the stroke. Do not move at speeds beyond the limit.

Allowable overhang length

*Refer to page 330 for details.

Moment direction

MP MY MR

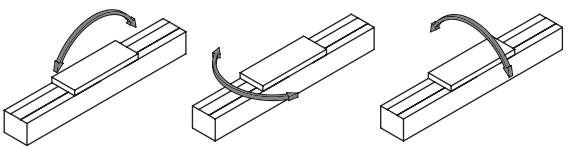

Dimensions Motor right-side mounting

● ECS-17-*****-R

· Refer to page 336 for grease nipple dimensions.

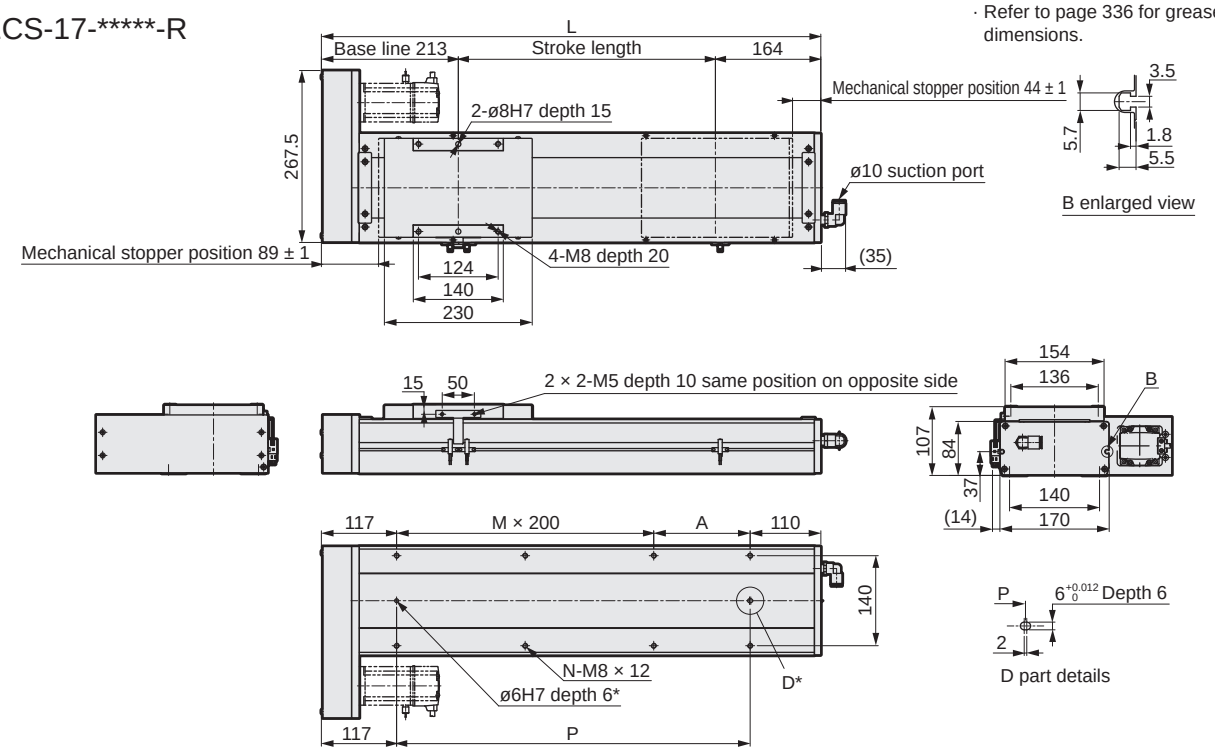

*Positioning pin hole (option)

Stroke length (mm)	50	100	150	200	250	300	350	400	450	500	550	600	650	700	750	800	850	900	950	1000	1050	1100	1150	1200	1250
L	427	477	527	577	627	677	727	777	827	877	927	977	1027	1077	1127	1177	1227	1277	1327	1377	1427	1477	1527	1577	1627
A	200	50	100	150	200	50	100	150	200	50	100	150	200	50	100	150	200	50	100	150	200	50	100	150	200
M	0	1	1	1	1	2	2	2	2	3	3	3	3	4	4	4	4	5	5	5	5	6	6	6	6
N	4	6	6	6	6	8	8	8	8	10	10	10	10	12	12	12	12	14	14	14	14	16	16	16	16
P	200	250	300	350	400	450	500	550	600	650	700	750	800	850	900	950	1000	1050	1100	1150	1200	1250	1300	1350	1400
Weight (kg)	12.6	13.4	14.2	15.0	15.8	16.6	17.4	18.1	18.9	19.7	20.5	21.3	22.1	22.9	23.6	24.4	25.2	26.0	26.8	27.6	28.4	29.1	29.9	30.7	31.5

Motor mounting part

● ECS-17-400W-R

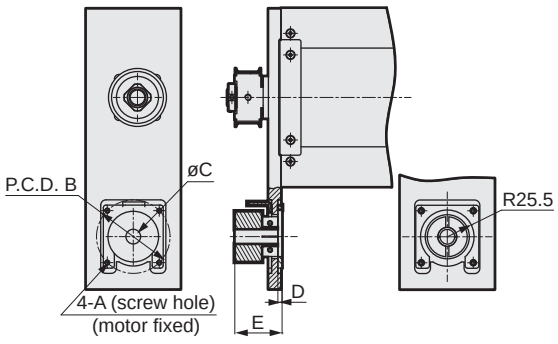

● ECS-17-750W-R

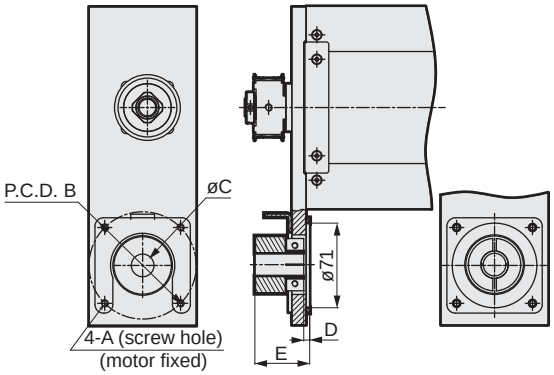

Mounted motor specification		A	B	C	D	E	Motor mounting bolt
M	400 W/750 W	M5/M6	ø70/ø90	ø14/ø19	4/5	45/46	4-M5 × L18/4-M6 × L24
Y	400 W/750 W	M5/M6	ø70/ø90	ø14/ø19	4/5	45/46	4-M5 × L18/4-M6 × L24
P	400 W/750 W	M4/M5	ø70/ø90	ø14/ø19	4/5	45/46	4-M4 × L18/4-M5 × L24
F	400 W/750 W	M5/M6	ø70/ø100	ø14/ø14	4/7	45/48	4-M5 × L18/4-M6 × L25

List of attachments

[Motor mounting parts]

Mounted motor specification	Timing belt, pulley	Fitting	Motor capacity	Motor mounting bolt	
				Size	Quantity
M	Included at shipment	Included at shipment	400 W/750 W	M5/M6	4
Y				M5/M6	4
P				M4/M5	4
F				M5/M6	4

*Refer to page 338 for fitting details.

[Origin sensor/Limit sensor]

Manufacturer	Model	Quantity
OMRON Corporation	EE-SX672	3

*Refer to page 334 for sensor specifications.

Dimensions Motor bottom mounting

● ECS-17-*****-D

· Refer to page 336 for grease nipple dimensions.

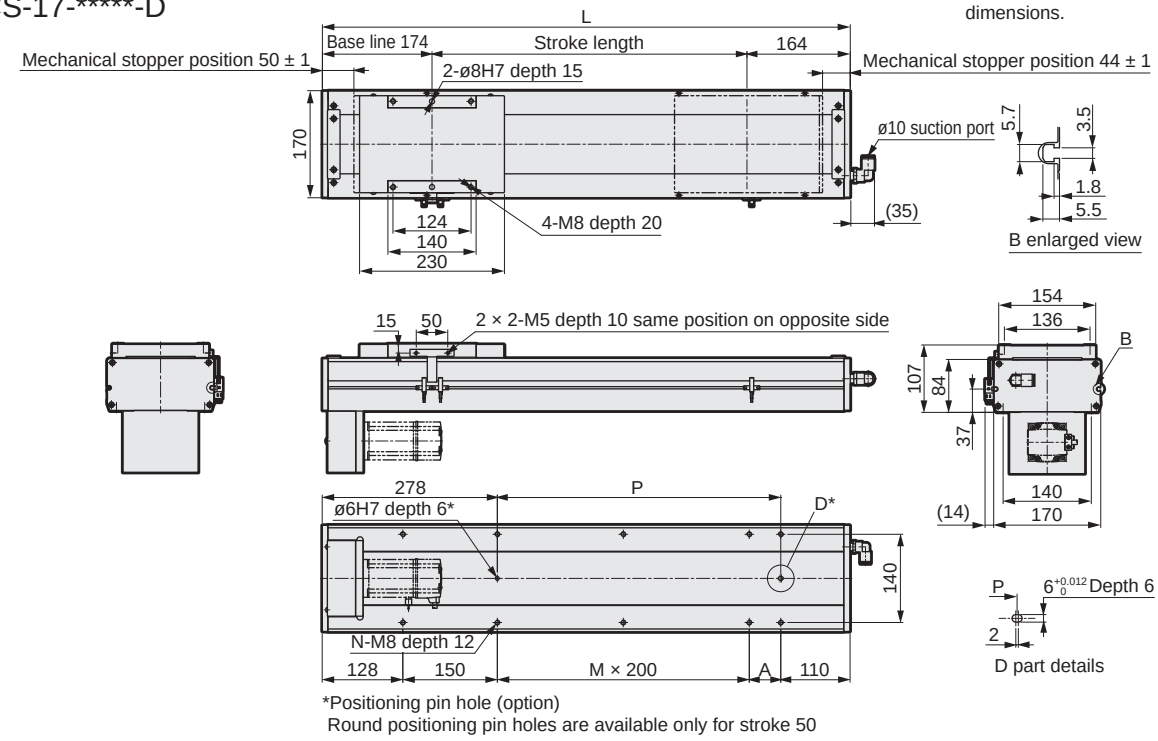

*Positioning pin hole (option)
Round positioning pin holes are available only for stroke 50

Stroke length (mm)	50	100	150	200	250	300	350	400	450	500	550	600	650	700	750	800	850	900	950	1000	1050	1100	1150	1200	1250
L	388	438	488	538	588	638	688	738	788	838	888	938	988	1038	1088	1138	1188	1238	1288	1338	1388	1438	1488	1538	1588
A	0	50	100	150	200	50	100	150	200	50	100	150	200	50	100	150	200	50	100	150	200	50	100	150	200
M	0	0	0	0	0	1	1	1	1	2	2	2	2	3	3	3	3	4	4	4	4	5	5	5	5
N	4	6	6	6	6	8	8	8	8	10	10	10	10	12	12	12	12	14	14	14	14	16	16	16	16
P	0	50	100	150	200	250	300	350	400	450	500	550	600	650	700	750	800	850	900	950	1000	1050	1100	1150	1200
Weight (kg)	12.6	13.4	14.2	15.0	15.8	16.6	17.4	18.1	18.9	19.7	20.5	21.3	22.1	22.9	23.6	24.4	25.2	26.0	26.8	27.6	28.4	29.1	29.9	30.7	31.5

Motor mounting part

● ECS-17-400W-D

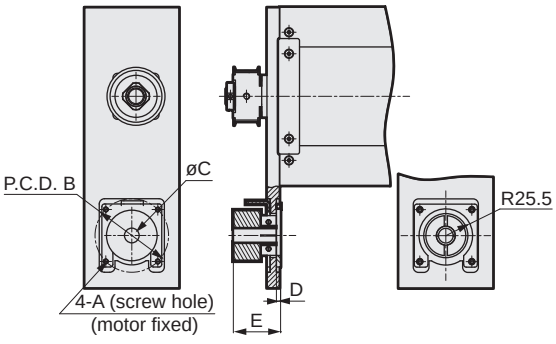

● ECS-17-750W-D

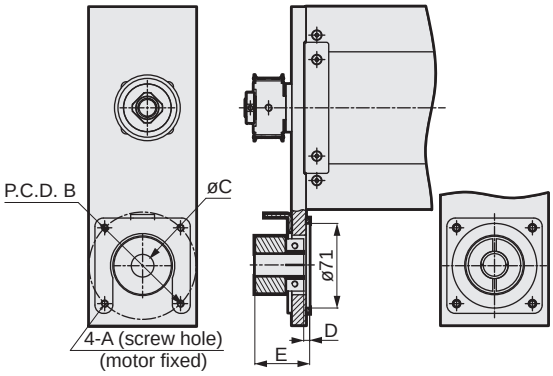

Mounted motor specification		A	B	C	D	E	Motor mounting bolt
M	400 W/750 W	M5/M6	ø70/ø90	ø14/ø19	4/5	45/46	4-M5 × L18/4-M6 × L24
Y	400 W/750 W	M5/M6	ø70/ø90	ø14/ø19	4/5	45/46	4-M5 × L18/4-M6 × L24
P	400 W/750 W	M4/M5	ø70/ø90	ø14/ø19	4/5	45/46	4-M4 × L18/4-M5 × L24
F	400 W/750 W	M5/M6	ø70/ø100	ø14/ø14	4/7	45/48	4-M5 × L18/4-M6 × L25

List of attachments

[Motor mounting parts]

Mounted motor specification	Timing belt, pulley	Fitting	Motor capacity	Motor mounting bolt	
				Size	Quantity
M	Included at shipment	Included at shipment	400 W/ 750 W	M5/M6	4
Y				M5/M6	4
P				M4/M5	4
F				M5/M6	4

*Refer to page 338 for fitting details.

[Origin sensor/Limit sensor]

Manufacturer	Model	Quantity
OMRON Corporation	EE-SX672	3

*Refer to page 334 for sensor specifications.

Dimensions Motor left-side mounting

● ECS-17-*****-L

· Refer to page 336 for grease nipple dimensions.

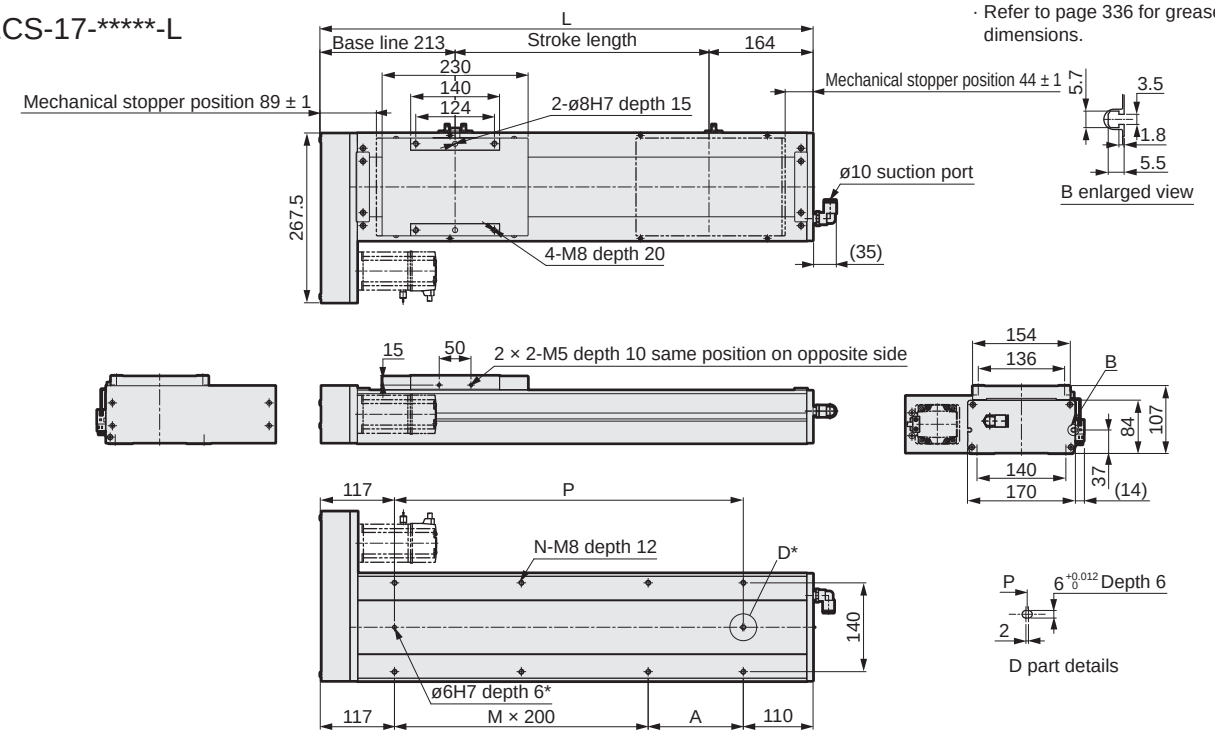

*Positioning pin hole (option)

Stroke length (mm)	50	100	150	200	250	300	350	400	450	500	550	600	650	700	750	800	850	900	950	1000	1050	1100	1150	1200	1250
L	427	477	527	577	627	677	727	777	827	877	927	977	1027	1077	1127	1177	1227	1277	1327	1377	1427	1477	1527	1577	1627
A	200	50	100	150	200	50	100	150	200	50	100	150	200	50	100	150	200	50	100	150	200	50	100	150	200
M	0	1	1	1	1	2	2	2	2	3	3	3	3	4	4	4	4	5	5	5	5	6	6	6	6
N	4	6	6	6	6	8	8	8	8	10	10	10	10	12	12	12	12	14	14	14	14	16	16	16	16
P	200	250	300	350	400	450	500	550	600	650	700	750	800	850	900	950	1000	1050	1100	1150	1200	1250	1300	1350	1400
Weight (kg)	12.6	13.4	14.2	15.0	15.8	16.6	17.4	18.1	18.9	19.7	20.5	21.3	22.1	22.9	23.6	24.4	25.2	26.0	26.8	27.6	28.4	29.1	29.9	30.7	31.5

Motor mounting part

● ECS-17-400W-L

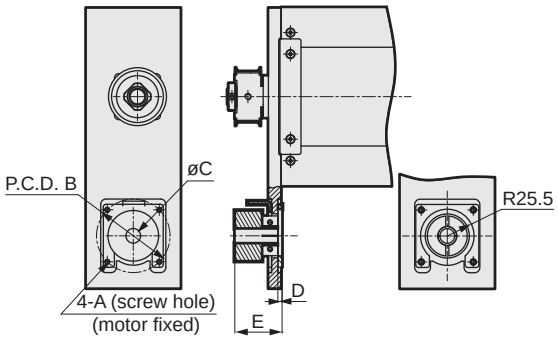

● ECS-17-750W-L

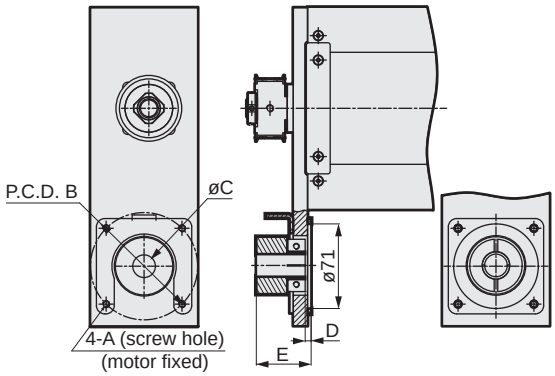

Mounted motor specification		A	B	C	D	E	Motor mounting bolt
M	400 W/750 W	M5/M6	ø70/ø90	ø14/ø19	4/5	45/46	4-M5 × L18/4-M6 × L24
Y	400 W/750 W	M5/M6	ø70/ø90	ø14/ø19	4/5	45/46	4-M5 × L18/4-M6 × L24
P	400 W/750 W	M4/M5	ø70/ø90	ø14/ø19	4/5	45/46	4-M4 × L18/4-M5 × L24
F	400 W/750 W	M5/M6	ø70/ø100	ø14/ø14	4/7	45/48	4-M5 × L18/4-M6 × L25

List of attachments

[Motor mounting parts]

Mounted motor specification	Timing belt, pulley	Fitting	Motor capacity	Motor mounting bolt	
				Size	Quantity
M	Included at shipment	Included at shipment	400 W/ 750 W	M5/M6	4
Y				M5/M6	4
P				M4/M5	4
F				M5/M6	4

*Refer to page 338 for fitting details.

[Origin sensor/Limit sensor]

Manufacturer	Model	Quantity
OMRON Corporation	EE-SX672	3

*Refer to page 334 for sensor specifications.

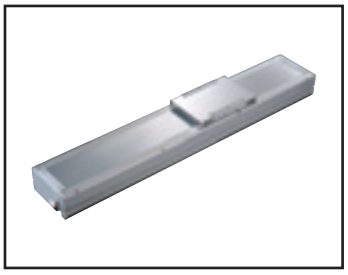

Electric actuator Ball screw drive Slider Low dust specification

ECS-22 Series

Straight motor mounting, built-in mounting

● Servo motor capacity: 750 W

How to order

ECS - 22 - 05 050 - E M 8 N N N N P

(A) (B) (C) (D) (E) (F) (G) (H) (I) (J) (K)

(A) Body size

22	Body width 220 mm

(B) Screw lead

05	5 mm
10	10 mm
25	25 mm
40	40 mm

(C) Stroke length

005 to 150	100 mm (In 50 mm increments) 1500 mm

(D) Motor mounting direction *1

E	Straight mounting
B	Built-in mounting

(E) Mounted motor specification

M	Select the mounted motor specification from the table below.
Y	
P	
F	

(F) Motor capacity

8	750 W

(G) Brake *1

N	None
B	Yes

(H) Origin sensor (1 pc) *2 *3 *4

N	None
A	Inside motor side
B	Inside motor opposite side
C	Outside motor side
D	Outside motor opposite side

(I) Limit sensor (2 pcs) *2 *3 *4

N	None
A	Inside
B	Outside

(J) Grease nipple *4 *5

N	None (Body mounting direction: Standard)
R	Right
L	Left

(K) Positioning pin hole

N	None
P	Yes

Manufacturer	750 W
Mitsubishi Electric Corporation	M
Delta Electronics Co., Ltd.	M
Sanyo Denki Co., Ltd.	-
YASKAWA Electric Corporation	Y
Keyence Corporation	Y
Panasonic Corporation	P
OMRON Corporation	P
Fuji Electric Co., Ltd.	M
FANUC CORPORATION	F
Bosch Rexroth AG	P
Rockwell Automation, Inc.	M
SIEMENS AG	M

*Refer to page 275 for the motor model No.

*1: "Yes" to the Brake can be selected only when the motor mounting method is built-in mounting.
*2: Origin sensor and limit sensor are available as a set. As it is both-or-nothing, select "None" for both.
*3: For sensor inside mounting, the user cannot adjust the position. (Assembled at shipment)
For sensor outside mounting, the user can adjust the position. (Included at shipment)
*4: Contact CKD to use the origin sensor, limit sensor and grease nipple in the same direction.
*5: "Body mounting direction: Standard" here refers to mounting from the bottom side.

Specifications

Applicable motor capacity		750 W servo motor			
Drive method		Ball screw ø25			ø20
Ball screw accuracy grade		C7			
Stroke length	mm	50 to 1500			
Screw lead	mm	5	10	25	40
Max. load capacity *1	Horizontal kg	150	150	120	60
	Vertical kg	55	45	20	10
Max. speed	mm/s	250	500	1250	2000
Rated thrust *1	N	2100	1050	420	260
Repeatability	mm	±0.01			
Lost motion	mm	0.1 or less			
Dynamic allowable load	N	14174			
Static allowable moment	N·m	MP: 2052, MY: 2052, MR: 1810			
Dynamic allowable moment	N·m	MP: 1098.5, MY: 1098.5, MR: 999.3			
Operating ambient temperature, humidity		0 to 40°C (no freezing) 35 to 80% RH (no condensation)			
Storage ambient temperature, humidity		-10 to 50°C (no freezing) 35 to 80% RH (no condensation)			
Atmosphere		No corrosive gas, explosive gas, or dust			

*1 Rated thrust and max. load capacity are guideline values assuming that the motor mounted will output the rated torque.

Stroke and max. speed

(mm/s)

Screw lead \ Stroke length	100 to 900	1000	1100	1200	1300	1400	1500
5	250	225	200	175	150	125	100
10	500	450	400	350	300	250	200
25	1250	1125	1000	875	750	625	500

Screw lead \ Stroke length	100 to 850	950	1050	1150	1250	1350	1450	1500
40	2000	1800	1600	1400	1200	1000	800	600

*The max. speed is the speed when the motor mounted by the customer can output a rotation speed of 3000 rpm.
The max. speed is restricted by the stroke. Do not move at speeds beyond the limit.

Allowable overhang length

*Refer to page 330 for details.

Moment direction

MP MY MR

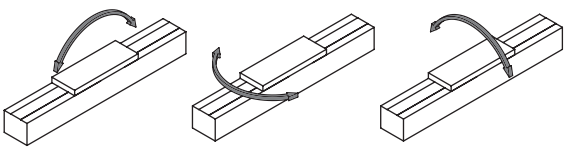

Dimensions Straight motor mounting

● ECS-22-*****-E

· Refer to page 336 for grease nipple dimensions.

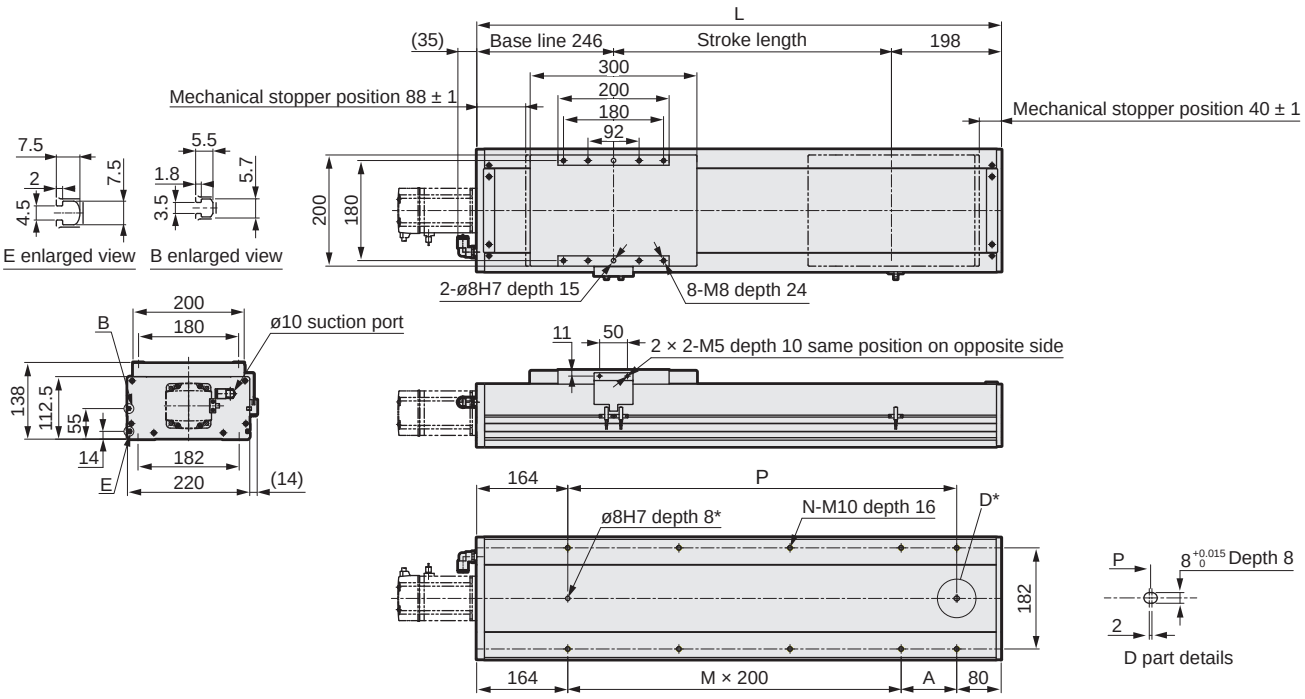

*Positioning pin hole (option)

Stroke length (mm)	50	100	150	200	250	300	350	400	450	500	550	600	650	700	750	800	850	900	950	1000	1050	1100	1150	1200	1250	1300	1350	1400	1450	1500
L	494	544	594	644	694	744	794	844	894	944	994	1044	1094	1144	1194	1244	1294	1344	1394	1444	1494	1544	1594	1644	1694	1744	1794	1844	1894	1944
A	50	100	150	200	50	100	150	200	50	100	150	200	50	100	150	200	50	100	150	200	50	100	150	200	50	100	150	200	50	100
M	1	1	1	1	2	2	2	2	3	3	3	3	4	4	4	4	5	5	5	5	6	6	6	6	7	7	7	7	8	8
N	6	6	6	6	8	8	8	8	10	10	10	10	12	12	12	12	14	14	14	14	16	16	16	16	18	18	18	18	20	20
P	250	300	350	400	450	500	550	600	650	700	750	800	850	900	950	1000	1050	1100	1150	1200	1250	1300	1350	1400	1450	1500	1550	1600	1650	1700
Weight (kg)	27.5	28.9	30.5	31.9	33.4	34.9	36.3	37.8	39.2	40.7	42.1	43.6	45.1	46.5	48.0	49.4	50.9	52.4	53.8	55.3	56.7	58.2	59.7	61.1	62.6	64.0	65.5	67.0	68.4	69.9

Motor mounting part

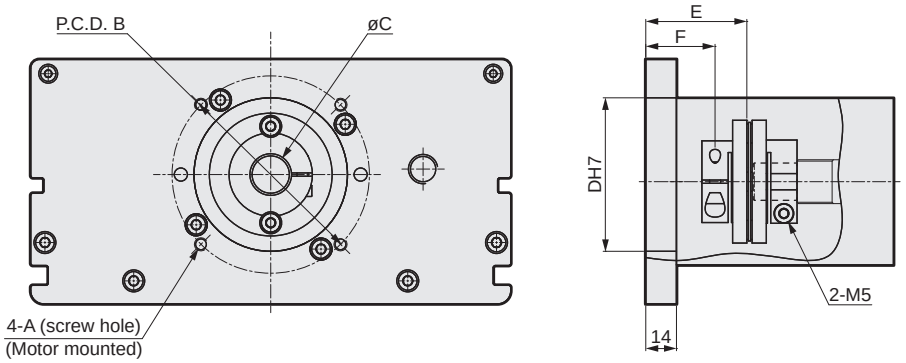

Mounted motor specification		A	B	C	D	E	F	Motor mounting bolt
M	750 W	M6	ø90	ø19	ø70	46.1	31.6	4-M6 × L16
Y	750 W	M6	ø90	ø19	ø70	46.1	31.6	4-M6 × L16
P	750 W	M5	ø90	ø19	ø70	46.1	31.6	4-M5 × L16
F	750 W	M6	ø100	ø14	ø80	29.7	15.2	4-M6 × L16

List of attachments

[Motor mounting parts]

Mounted motor specification	Coupling	Fitting	Motor capacity	Motor mounting bolt	
				Size	Quantity
M	Assembled at shipment	Included at shipment	750 W	M6	4
Y				M6	4
P				M5	4
F				M6	4

*Refer to page 338 for fitting details.

[Origin sensor/Limit sensor]

Manufacturer	Model	Quantity
OMRON Corporation	EE-SX672	3

*Refer to page 334 for sensor specifications.

Dimensions Motor built-in mounting

● ECS-22-*****-B

· Refer to page 336 for grease nipple dimensions.

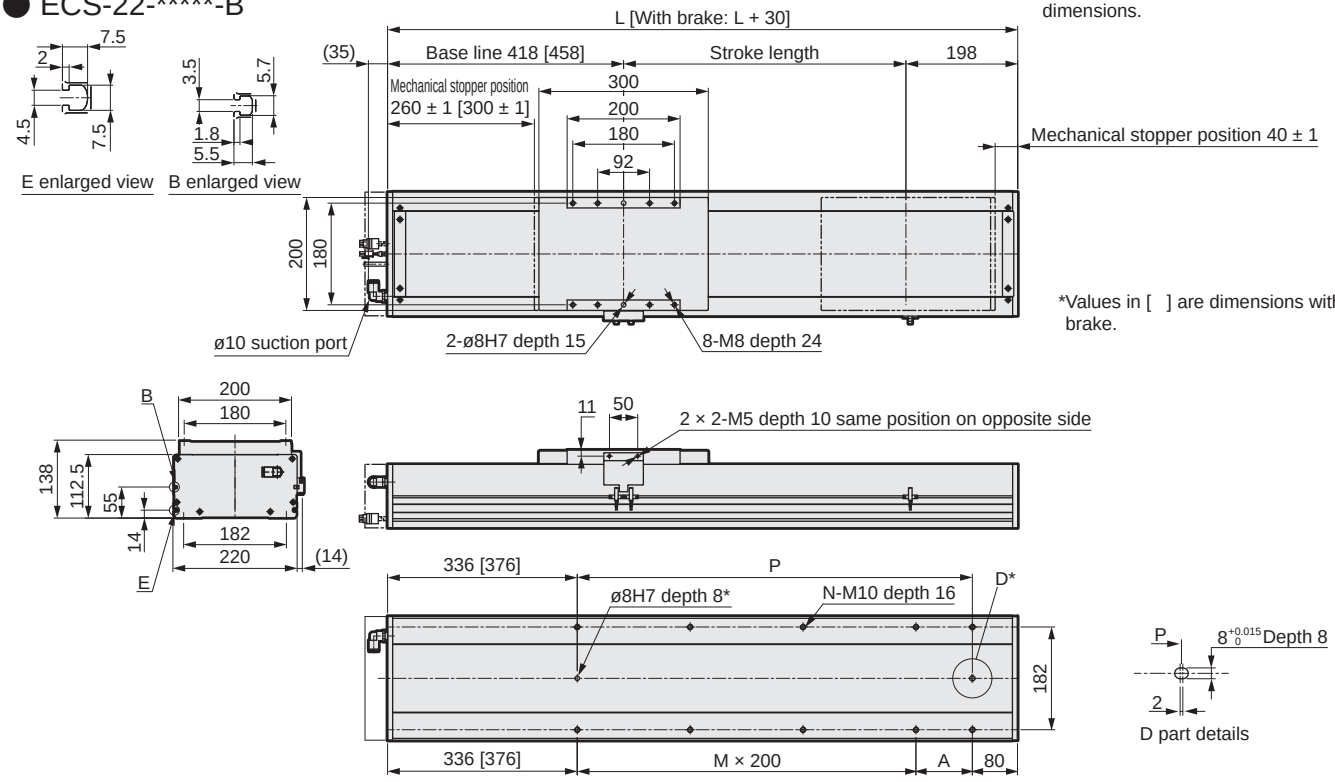

*Positioning pin hole (option)

Stroke length (mm)	50	100	150	200	250	300	350	400	450	500	550	600	650	700	750	800	850	900	950	1000	1050	1100	1150	1200	1250	1300	1350	1400	1450	1500
L	666	716	766	816	866	916	966	1016	1066	1116	1166	1216	1266	1316	1366	1416	1466	1516	1566	1616	1666	1716	1766	1816	1866	1916	1966	2016	2066	2116
A	50	100	150	200	50	100	150	200	50	100	150	200	50	100	150	200	50	100	150	200	50	100	150	200	50	100	150	200	50	100
M	1	1	1	1	2	2	2	2	3	3	3	3	4	4	4	4	5	5	5	5	6	6	6	6	7	7	7	7	8	8
N	6	6	6	6	8	8	8	8	10	10	10	10	12	12	12	12	14	14	14	14	16	16	16	16	18	18	18	18	20	20
P	250	300	350	400	450	500	550	600	650	700	750	800	850	900	950	1000	1050	1100	1150	1200	1250	1300	1350	1400	1450	1500	1550	1600	1650	1700
Weight (kg)	26.0	31.3	32.7	34.2	35.7	37.1	38.6	40.1	41.6	43.0	44.5	46.0	47.4	48.9	50.4	51.8	53.3	54.8	56.3	57.7	59.2	60.7	62.1	63.6	65.1	66.5	68.0	69.5	71.0	72.4

Motor mounting part

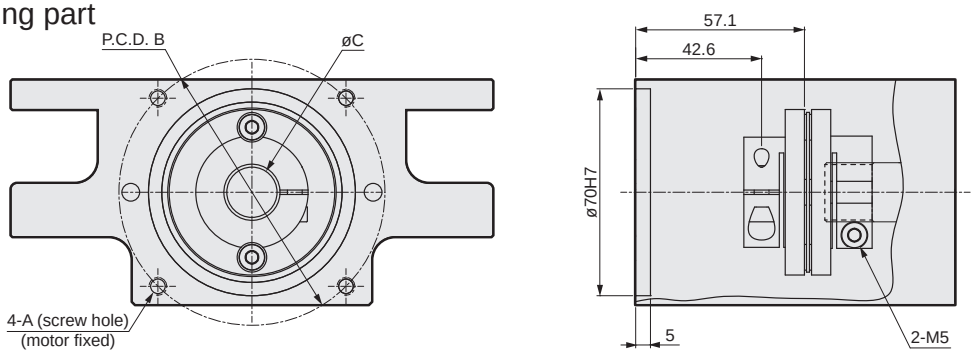

Mounted motor specification		A	B	C	Motor mounting bolt
M	750 W	M6	ø90	ø19	4-M6 × L16
Y	750 W	M6	ø90	ø19	4-M6 × L16
P	750 W	M5	ø90	ø19	4-M5 × L16

List of attachments

[Motor mounting parts]

Mounted motor specification	Coupling	Fitting	Motor capacity	Motor mounting bolt	
				Size	Quantity
M	Assembled at shipment	Included at shipment	750 W	M6	4
Y				M6	4
P				M5	4

*Refer to page 338 for fitting details.

[Origin sensor/Limit sensor]

Manufacturer	Model	Quantity
OMRON Corporation	EE-SX672	3

*Refer to page 334 for sensor specifications.

MEMO



Electric actuator Ball screw drive Slider Low dust specification

ECS-22 Series

Motor side mounting (left, right, bottom)

● Servo motor capacity: 750 W

How to order

ECS - 22 - 05 040 - R M 8 N N N N P

(A) (B) (C) (D) (E) (F) (G) (H) (I) (J) (K)

(A) Body size

22	Body width 220 mm

(B) Screw lead

05	5 mm
10	10 mm
25	25 mm
40	40 mm

(C) Stroke length

005 to 150	100 mm (In 50 mm increments) to 1500 mm

(D) Motor mounting direction

R	Right mounting
D	Bottom mounting
L	Left mounting

(E) Mounted motor specification

M	Select the mounted motor specification from the table below.
Y	
P	
F	

(F) Motor capacity

8	750 W

(G) Brake

N	None

(H) Origin sensor (1 pc) *1 *2 *3

N	None
A	Inside motor side
B	Inside motor opposite side
C	Outside motor side
D	Outside motor opposite side

(I) Limit sensor (2 pcs) *1 *2 *3

N	None
A	Inside
B	Outside

(J) Grease nipple *3 *4 *5

N	None (Body mounting direction: Standard)
R	Right
L	Left

(K) Positioning pin hole

N	None
P	Yes

Manufacturer	750 W
Mitsubishi Electric Corporation	M
Delta Electronics Co., Ltd.	M
Sanyo Denki Co., Ltd.	-
YASKAWA Electric Corporation	Y
Keyence Corporation	Y
Panasonic Corporation	P
OMRON Corporation	P
Fuji Electric Co., Ltd.	M
FANUC CORPORATION	F
Bosch Rexroth AG	P
Rockwell Automation, Inc.	M
SIEMENS AG	M

*Refer to page 275 for the motor model No.

*1: Origin sensor and limit sensor are available as a set. As it is both-or-nothing, select "None" for both.
*2: For sensor inside mounting, the user cannot adjust the position. (Assembled at shipment)
For sensor outside mounting, the user can adjust the position. (Included at shipment)
*3: Contact CKD to use the origin sensor, limit sensor and grease nipple in the same direction.
*4: "Body mounting direction: Standard" here refers to mounting from the bottom side.
*5: When selecting motor mounting direction R, grease nipple R cannot be selected.
When selecting L, grease nipple L cannot be selected.

Specifications

Applicable motor capacity		750 W servo motor			
Drive method		Ball screw ø25			ø20
Ball screw accuracy grade		C7			
Stroke length	mm	50 to 1500			
Screw lead	mm	5	10	25	40
Max. load capacity *1	Horizontal kg	150	150	120	60
	Vertical kg	55	45	20	10
Max. speed	mm/s	250	500	1250	2000
Rated thrust *1	N	2100	1050	420	260
Repeatability	mm	±0.01			
Lost motion	mm	0.1 or less			
Dynamic allowable load	N	14174			
Static allowable moment	N·m	MP: 2052, MY: 2052, MR: 1810			
Dynamic allowable moment	N·m	MP: 1098.5, MY: 1098.5, MR: 999.3			
Operating ambient temperature, humidity		0 to 40°C (no freezing) 35 to 80% RH (no condensation)			
Storage ambient temperature, humidity		-10 to 50°C (no freezing) 35 to 80% RH (no condensation)			
Atmosphere		No corrosive gas, explosive gas, or dust			

*1 Rated thrust and max. load capacity are guideline values assuming that the motor mounted will output the rated torque.

Stroke and max. speed

(mm/s)

Screw lead \ Stroke length	100 to 900	1000	1100	1200	1300	1400	1500
5	250	225	200	175	150	125	100
10	500	450	400	350	300	250	200
25	1250	1125	1000	875	750	625	500

Screw lead \ Stroke length	100 to 850	950	1050	1150	1250	1350	1450	1500
40	2000	1800	1600	1400	1200	1000	800	600

*The max. speed is the speed when the motor mounted by the customer can output a rotation speed of 3000 rpm.
The max. speed is restricted by the stroke. Do not move at speeds beyond the limit.

Allowable overhang length

*Refer to page 330 for details.

Moment direction

MP MY MR

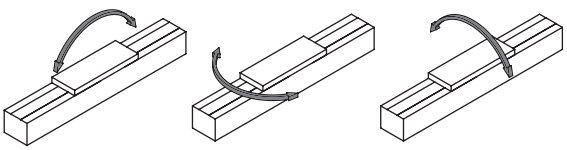

Dimensions Motor right-side mounting

● ECS-22-*****-R

· Refer to page 336 for grease nipple dimensions.

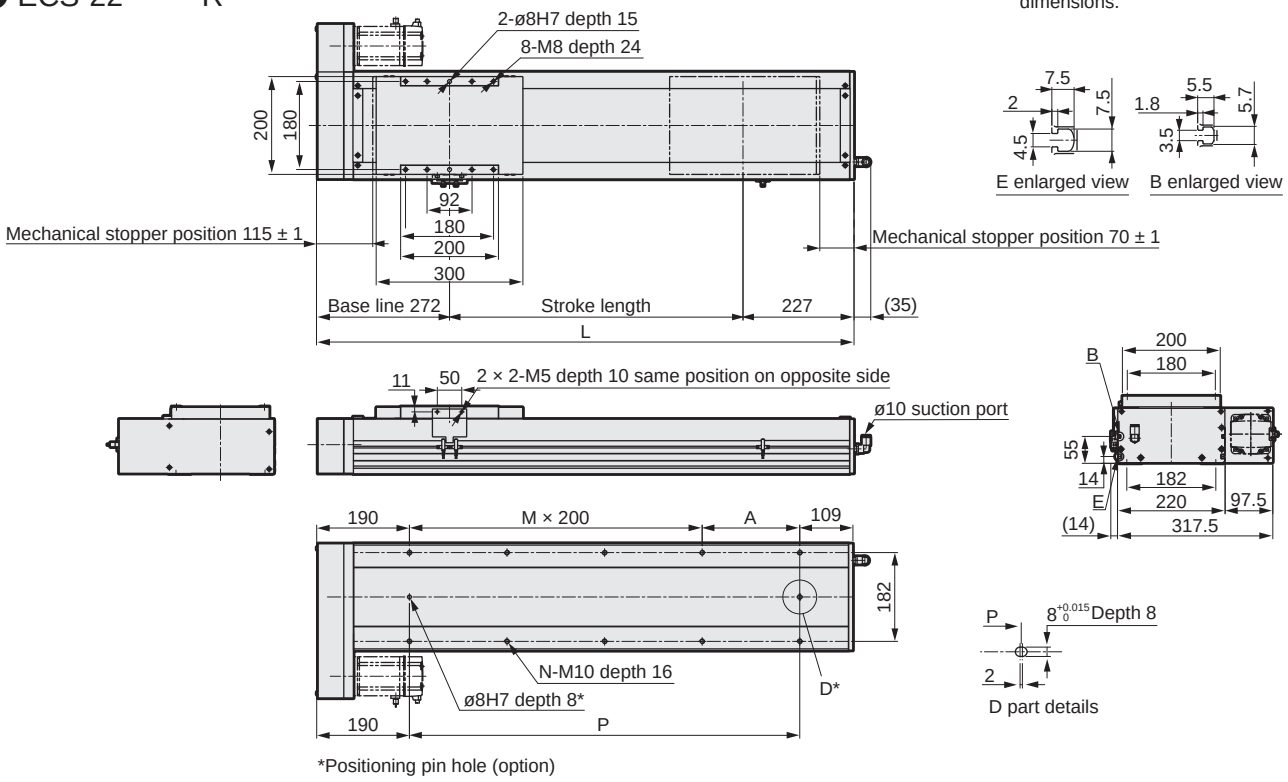

*Positioning pin hole (option)

Stroke length (mm)	50	100	150	200	250	300	350	400	450	500	550	600	650	700	750	800	850	900	950	1000	1050	1100	1150	1200	1250	1300	1350	1400	1450	1500
L	549	599	649	699	749	799	849	899	949	999	1049	1099	1149	1199	1249	1299	1349	1399	1449	1499	1549	1599	1649	1699	1749	1799	1849	1899	1949	1999
A	50	100	150	200	50	100	150	200	50	100	150	200	50	100	150	200	50	100	150	200	50	100	150	200	50	100	150	200	50	100
M	1	1	1	1	2	2	2	2	3	3	3	3	4	4	4	4	5	5	5	5	6	6	6	6	7	7	7	7	8	8
N	6	6	6	6	8	8	8	8	10	10	10	10	12	12	12	12	14	14	14	14	16	16	16	16	18	18	18	18	20	20
P	250	300	350	400	450	500	550	600	650	700	750	800	850	900	950	1000	1050	1100	1150	1200	1250	1300	1350	1400	1450	1500	1550	1600	1650	1700
Weight (kg)	26.0	30.1	31.6	33.0	34.5	35.9	37.4	38.9	40.3	41.8	43.2	44.7	46.2	47.6	49.1	50.5	52.0	53.5	54.9	56.4	57.8	59.3	60.8	62.2	63.7	65.1	66.6	68.1	69.5	71.0

Motor mounting part

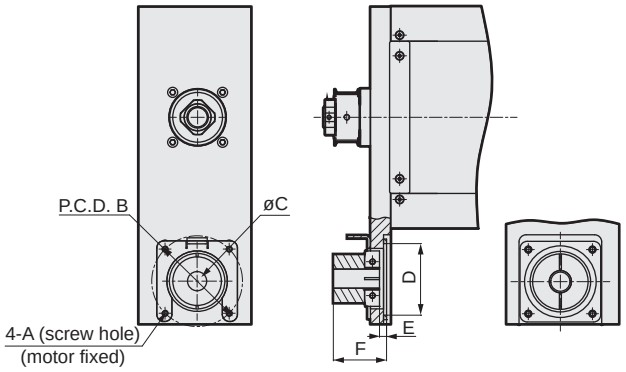

Mounted motor specification		A	B	C	D	E	F	Motor mounting bolt
M	750 W	M6	ø90	ø19	ø71	7	52.8	4-M6 × L24
Y	750 W	M6	ø90	ø19	ø71	7	52.8	4-M6 × L24
P	750 W	M5	ø90	ø19	ø71	7	52.8	4-M5 × L24
F	750 W	M6	ø100	ø14	ø81	8	53.8	4-M6 × L25

List of attachments

[Motor mounting parts]

Mounted motor specification	Timing belt/ pulley	Fitting	Motor capacity	Motor mounting bolt	
				Size	Quantity
M	Included at shipment	Included at shipment	750 W	M6	4
Y				M6	4
P				M5	4
F				M6	4

*Refer to page 338 for fitting details.

[Origin sensor/Limit sensor]

Manufacturer	Model	Quantity
OMRON Corporation	EE-SX672	3

*Refer to page 334 for sensor specifications.

Dimensions Motor bottom mounting

● ECS-22-*****-D

· Refer to page 336 for grease nipple dimensions.

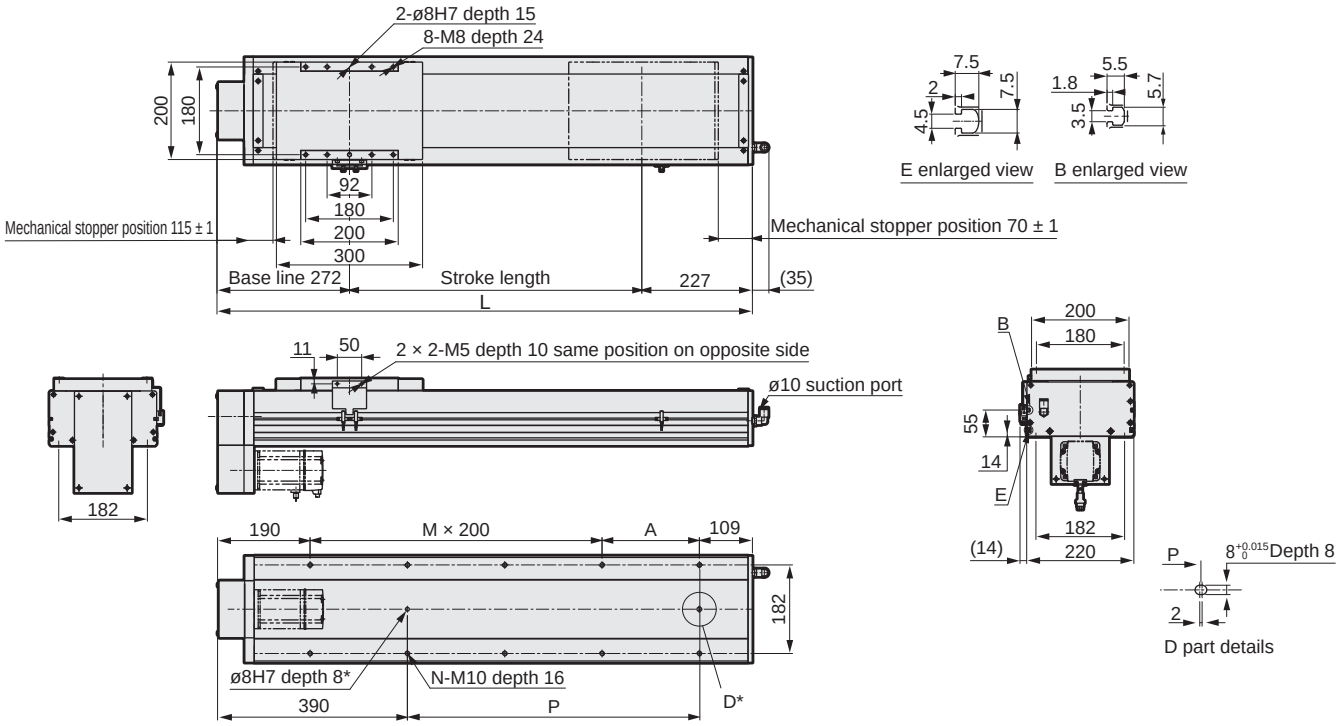

*Positioning pin hole (option)

Stroke length (mm)	50	100	150	200	250	300	350	400	450	500	550	600	650	700	750	800	850	900	950	1000	1050	1100	1150	1200	1250	1300	1350	1400	1450	1500
L	549	599	649	699	749	799	849	899	949	999	1049	1099	1149	1199	1249	1299	1349	1399	1449	1499	1549	1599	1649	1699	1749	1799	1849	1899	1948	1999
A	50	100	150	200	50	100	150	200	50	100	150	200	50	100	150	200	50	100	150	200	50	100	150	200	50	100	150	200	50	100
M	1	1	1	1	2	2	2	2	3	3	3	3	4	4	4	4	5	5	5	5	6	6	6	6	7	7	7	7	8	8
N	6	6	6	6	8	8	8	8	10	10	10	10	12	12	12	12	14	14	14	14	16	16	16	16	18	18	18	18	20	20
P	50	100	150	200	250	300	350	400	450	500	550	600	650	700	750	800	850	900	950	1000	1050	1100	1150	1200	1250	1300	1350	1400	1450	1500
Weight (kg)	27.5	30.1	31.6	33.0	34.5	35.9	37.4	38.9	40.3	41.8	43.2	44.7	46.2	47.6	49.1	50.5	52.0	53.5	54.9	56.4	57.8	59.3	60.8	62.2	63.7	65.1	66.6	68.1	69.5	71.0

Motor mounting part

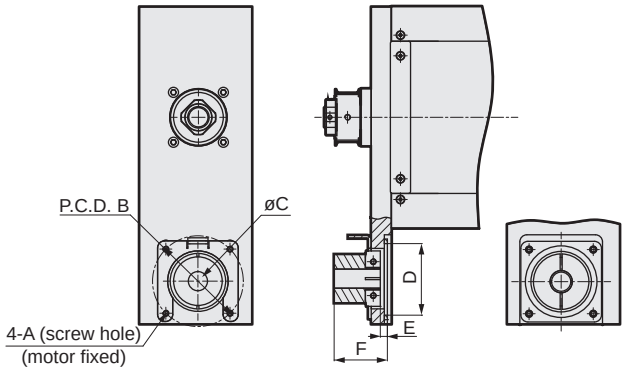

Mounted motor specification		A	B	C	D	E	F	Motor mounting bolt
M	750 W	M6	ø90	ø19	ø71	7	52.8	4-M6 × L24
Y	750 W	M6	ø90	ø19	ø71	7	52.8	4-M6 × L24
P	750 W	M5	ø90	ø19	ø71	7	52.8	4-M5 × L24
F	750 W	M6	ø100	ø14	ø81	8	53.8	4-M6 × L25

List of attachments

[Motor mounting parts]

Mounted motor specification	Timing belt/ pulley	Fitting	Motor capacity	Motor mounting bolt	
				Size	Quantity
M	Included at shipment	Included at shipment	750 W	M6	4
Y				M6	4
P				M5	4
F				M6	4

*Refer to page 338 for fitting details.

[Origin sensor/Limit sensor]

Manufacturer	Model	Quantity
OMRON Corporation	EE-SX672	3

*Refer to page 334 for sensor specifications.

Dimensions Motor left-side mounting

● ECS-22-*****-L

· Refer to page 336 for grease nipple dimensions.

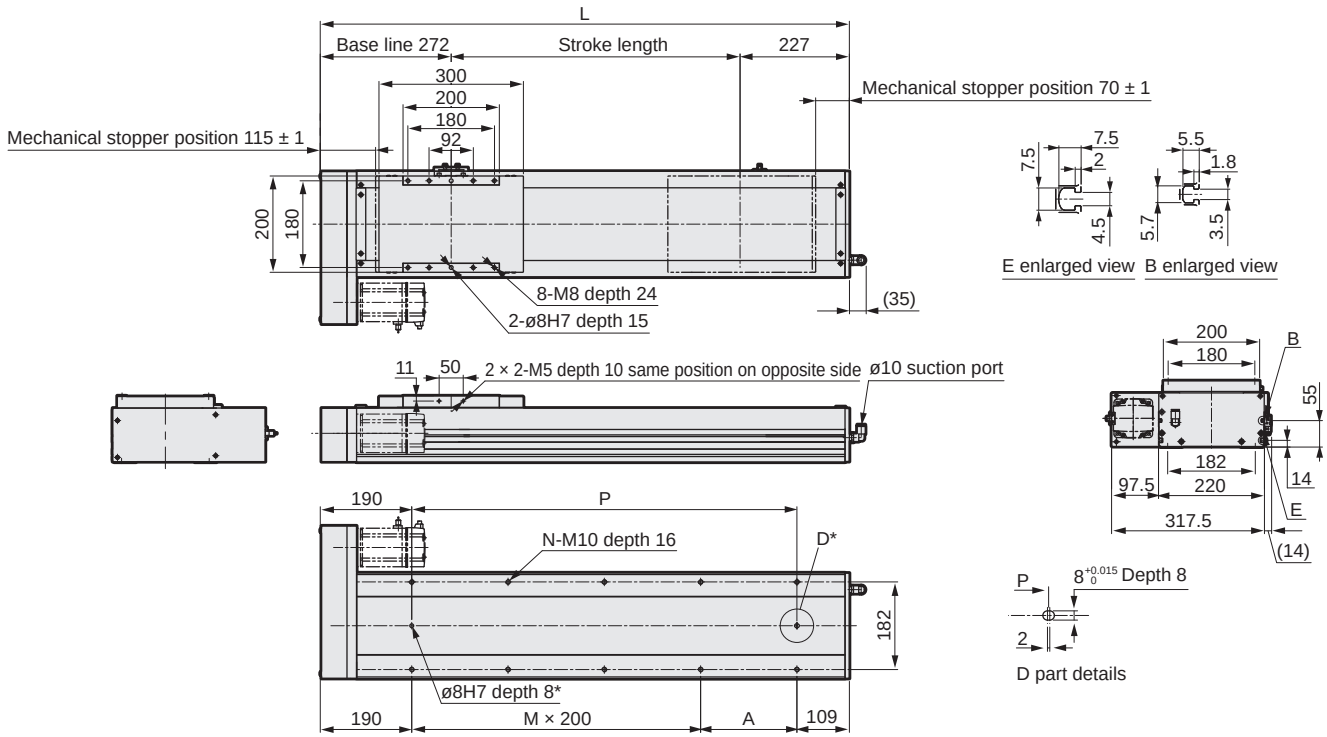

*Positioning pin hole (option)

Stroke length (mm)	50	100	150	200	250	300	350	400	450	500	550	600	650	700	750	800	850	900	950	1000	1050	1100	1150	1200	1250	1300	1350	1400	1450	1500
L	549	599	649	699	749	799	849	899	949	999	1049	1099	1149	1199	1249	1299	1349	1399	1449	1499	1549	1599	1649	1699	1749	1799	1849	1899	1949	1999
A	50	100	150	200	50	100	150	200	50	100	150	200	50	100	150	200	50	100	150	200	50	100	150	200	50	100	150	200	50	100
M	1	1	1	1	2	2	2	2	3	3	3	3	4	4	4	4	5	5	5	5	6	6	6	6	7	7	7	7	8	8
N	6	6	6	6	8	8	8	8	10	10	10	10	12	12	12	12	14	14	14	14	16	16	16	16	18	18	18	18	20	20
P	250	300	350	400	450	500	550	600	650	700	750	800	850	900	950	1000	1050	1100	1150	1200	1250	1300	1350	1400	1450	1500	1550	1600	1650	1700
Weight (kg)	26.0	30.1	31.6	33.0	34.5	35.9	37.4	38.9	40.3	41.8	43.2	44.7	46.2	47.6	49.1	50.5	52.0	53.5	54.9	56.4	57.8	59.3	60.8	62.2	63.7	65.1	66.6	68.1	69.5	71.0

Motor mounting part

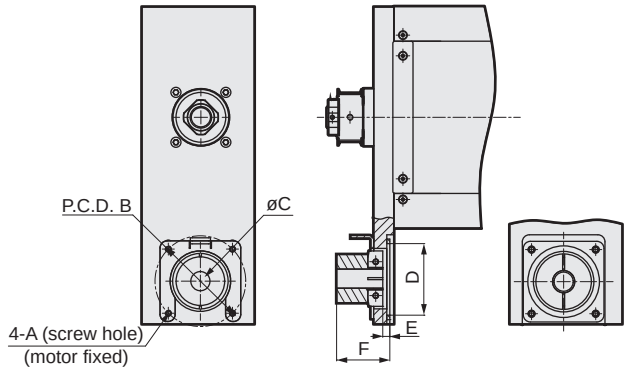

Mounted motor specification		A	B	C	D	E	F	Motor mounting bolt
M	750 W	M6	ø90	ø19	ø71	7	52.8	4-M6 × L24
Y	750 W	M6	ø90	ø19	ø71	7	52.8	4-M6 × L24
P	750 W	M5	ø90	ø19	ø71	7	52.8	4-M5 × L24
F	750 W	M6	ø100	ø14	ø81	8	53.8	4-M6 × L25

List of attachments

[Motor mounting parts]

Mounted motor specification	Timing belt/ pulley	Fitting	Motor capacity	Motor mounting bolt	
				Size	Quantity
M	Included at shipment	Included at shipment	750 W	M6	4
Y				M6	4
P				M5	4
F				M6	4

*Refer to page 338 for fitting details.

[Origin sensor/Limit sensor]

Manufacturer	Model	Quantity
OMRON Corporation	EE-SX672	3

*Refer to page 334 for sensor specifications.

Model selection

STEP 1 Confirming load capacity

Load capacity varies with mounting orientation and screw lead.
Refer to the selection table (page 272) and the specification table for each model to select the size and screw lead.

STEP 2 Confirming positioning time

Calculate the positioning time of the selected product according to the following example and confirm that the required tact is achievable.
Select the speed and acceleration/deceleration from the specification table for each model and the motor selected by the customer.

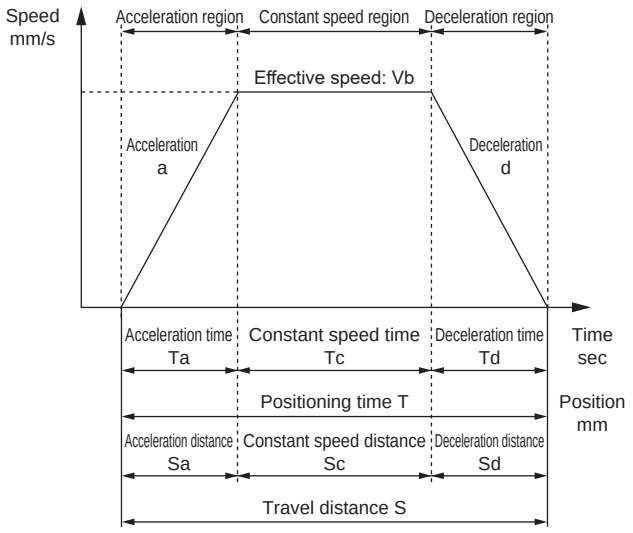

	Description	Code	Unit	Remarks
Set value	Set speed	V	mm/s	
	Set acceleration	a	mm/s^2	
	Set deceleration	d	mm/s^2	
	Travel distance	S	mm	
Calculated value	Achieved speed	Vmax	mm/s	$= \{2 \times a \times d \times S/(a + d)\}^{1/2}$
	Effective speed	Vb	mm/s	Smaller of V and Vmax
	Acceleration time	Ta	s	= Vb/a [0.2 sec or more]
	Deceleration time	Td	s	= Vb/d [0.2 sec or more]
	Constant speed time	Tc	s	= Sc/Vb
	Acceleration distance	Sa	mm	$= (a \times Ta^2)/2$
	Deceleration distance	Sd	mm	$= (d \times Td^2)/2$
	Constant speed distance	Sc	mm	= S - (Sa + Sd)
	Positioning time	T	s	= Ta + Tc + Td

*Do not use at speeds that exceed the specifications.
*Acceleration/deceleration setting by acceleration/deceleration time varies with set speed and stroke length.
*Depending on acceleration/deceleration and stroke length, the trapezoid speed waveform may not be formed (the set speed may not be achieved). In this case, select the effective speed (Vb) from the set speed (V) and the achieved speed (Vmax), whichever is smaller.
*Use with acceleration time/deceleration time of 0.2 sec or longer.
*1 G ≈ 9.8 m/s^2.

STEP 3 Confirming allowable overhang length

Make sure that the load overhang length during operation is within the allowable range (pages 330 to 332).

For selection details, confirm with the CKD online model selection system, or contact CKD.

Introducing the online model selection system

[For confirmation via PC]

(https://www.ckd.co.jp/kiki/en/selection_system/)

[For confirmation via iPad or smartphone]

*Depending on your smartphone environment, it may not be displayed correctly.

MEMO

Allowable overhang length (ECS Series)

[When installed horizontally]

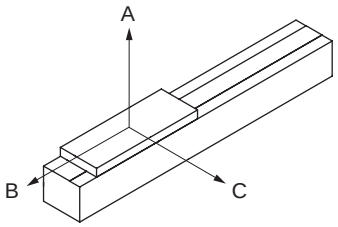

[Allowable overhang length]

● ECS-05

Motor mounted	Acceleration/deceleration time sec	Screw lead	Weight kg	Overhang mm A	B	C
Straight / side/bottom	0.2	2	5	750	45	105
			10	350	20	47
		5	4	480	45	105
			7	300	25	55
		10	3	300	55	110
			5	180	30	65

● ECS-06

Motor mounted	Acceleration/deceleration time sec	Screw lead	Weight kg	Overhang mm A	B	C
Straight / side/bottom	0.2	2	10	400	65	150
			30	150	15	40
		5	10	520	50	110
			30	130	10	25
		10	3	800	145	330
			8	280	50	120
			15	140	23	55

● ECS-10

Motor mounted	Acceleration/deceleration time sec	Screw lead	Weight kg	Overhang mm A	B	C
Straight / side/bottom	0.2	5	30	560	50	50
			50	310	27	27
		10	15	440	90	90
			25	250	50	50
			30	200	40	40
		16	5	950	270	230
			10	480	130	110
			22	200	55	45
		20	5	750	250	200
			10	370	120	95
			15	240	80	60

● ECS-12

Motor mounted	Acceleration/deceleration time sec	Screw lead	Weight kg	Overhang mm A	B	C
Straight / side/bottom	0.2	5	30	900	70	80
			50	420	30	40
		10	15	900	150	160
			25	490	80	85
			30	400	60	70
		16	5	1700	430	450
			10	800	200	220
			22	330	80	85
		20	5	1200	420	400
			10	580	200	190
			15	370	120	120

● ECS-14 (200 W)

Motor mounted	Acceleration/deceleration time sec	Screw lead	Weight kg	Overhang mm A	B	C
Straight / side/bottom	0.2	5	60	2300	250	240
			80	1600	180	170
			95	1150	145	140
		10	30	2000	500	450
			50	1400	280	250
			75	1000	170	160
		16	10	2200	1200	1000
			20	1600	600	500
			44	800	260	220
		20	10	2300	1200	1000
			20	1400	600	500
			35	1000	330	290

● ECS-14 (400 W)

Motor mounted	Acceleration/deceleration time sec	Screw lead	Weight kg	Overhang mm A	B	C
Straight / side/bottom	0.2	5	60	2300	250	240
			80	1600	180	170
			110	1150	120	115
		10	30	2000	500	450
			50	1400	280	250
			88	700	140	125
		16	10	2200	1200	1000
			20	1600	600	500
			48	800	260	220
		20	10	2300	1200	1000
			20	1400	600	500
			40	600	280	230

● ECS-17 (400 W)

Motor mounted	Acceleration/deceleration time sec	Screw lead	Weight kg	Overhang mm A	B	C
Straight / side/bottom	0.2	5	60	2950	400	475
			100	2000	220	265
			110	1850	200	240
		10	60	1600	350	400
			75	1350	270	320
			90	1050	220	230
		20	30	1850	650	650
			50	1100	380	380
			75	700	240	240
		40	10	1700	1150	900
			20	850	550	430
			35	450	300	240

● ECS-17 (750 W)

Motor mounted	Acceleration/deceleration time sec	Screw lead	Weight kg	Overhang mm A	B	C
Straight / side/bottom	0.2	5	60	3300	410	470
			100	2000	230	260
			120	1700	180	210
		10	60	2300	400	440
			75	1850	310	350
			95	1450	230	270
		20	30	2000	650	620
			50	1150	370	370
			83	650	210	210
		40	10	1650	1150	850
			20	530	350	270
			50	300	190	150

● ECS-22

Motor mounted	Acceleration/deceleration time sec	Screw lead	Weight kg	Overhang mm A	B	C
Straight / side/bottom	0.2	5	60	3600	650	650
			100	2800	350	340
			150	2300	260	230
		10	60	2850	960	810
			100	2000	570	460
			150	1450	340	310
		25	50	2000	850	610
			80	1200	500	360
			120	770	300	220
		40	10	4200	2850	1850
			30	1400	900	600
			60	650	420	270

*When suspending from above, use 1/3 of the static allowable moment, dynamic allowable load, dynamic allowable moment, and overhang length. Use overhang length up to the center of gravity of the load within A, B and C directions.

Allowable overhang length (ECS Series)

[When wall-mounted]

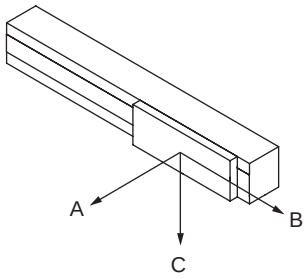

[Allowable overhang length]

● ECS-05

Motor mounted	Acceleration/deceleration time sec	Screw lead	Weight kg	Overhang mm A	B	C
Straight / side/bottom	0.2	2	5	105	45	750
			10	47	20	350
		5	4	100	45	450
			7	55	23	240
		10	3	110	55	400
			5	60	30	230

● ECS-06

Motor mounted	Acceleration/deceleration time sec	Screw lead	Weight kg	Overhang mm A	B	C
Straight / side/bottom	0.2	2	15	110	42	400
			30	45	15	180
		5	5	240	95	1150
			10	115	50	540
			30	25	10	140
		10	3	320	150	700
			8	110	50	250
			15	50	25	120

● ECS-10

Motor mounted	Acceleration/deceleration time sec	Screw lead	Weight kg	Overhang mm A	B	C
Straight / side/bottom	0.2	5	10	160	160	1400
			20	75	75	650
			30	45	45	400
		10	10	130	140	690
			20	60	65	330
			30	40	40	210
		16	5	230	250	750
			10	110	120	370
			22	45	50	160
		20	5	220	250	650
			10	105	120	320
			15	65	75	210

● ECS-12

Motor mounted	Acceleration/deceleration time sec	Screw lead	Weight kg	Overhang mm A	B	C
Straight / side/bottom	0.2	5	10	330	270	2200
			20	145	120	1000
			30	90	70	600
		10	10	260	240	850
			20	115	110	520
			30	70	60	300
		16	5	450	450	1300
			10	210	210	600
			22	80	80	240
		20	5	410	410	1200
			10	190	195	600
			15	120	120	390

● ECS-14 (200 W)

Motor mounted	Acceleration/deceleration time sec	Screw lead	Weight kg	Overhang mm A	B	C
Straight / side/bottom	0.2	5	60	240	250	1600
			80	170	180	1200
			95	140	145	1050
		10	30	420	460	1500
			50	240	250	1000
			75	150	160	700
		16	10	1050	1200	2650
			20	500	620	1450
			44	230	270	800
		20	10	1000	1200	1900
			20	500	600	1000
			35	270	300	600

● ECS-14 (400 W)

Motor mounted	Acceleration/deceleration time sec	Screw lead	Weight kg	Overhang mm A	B	C
Straight / side/bottom	0.2	5	60	240	250	1600
			80	170	180	1200
			110	115	120	1050
		10	30	420	460	1500
			50	240	250	1000
			88	120	130	700
		16	10	1050	1200	2650
			20	500	620	1450
			48	200	230	800
		20	10	1000	1200	1900
			20	500	600	1000
			40	230	290	600

● ECS-17 (400 W)

Motor mounted	Acceleration/deceleration time sec	Screw lead	Weight kg	Overhang mm A	B	C
Straight / side/bottom	0.2	5	60	500	420	2450
			100	280	240	1600
			110	250	215	1400
		10	60	420	380	1950
			75	330	300	1500
			90	270	240	1200
		20	30	650	650	1600
			50	375	380	900
			75	245	240	600
		40	10	900	1100	1750
			20	450	550	850
			35	240	300	470

● ECS-17 (750 W)

Motor mounted	Acceleration/deceleration time sec	Screw lead	Weight kg	Overhang mm A	B	C
Straight / side/bottom	0.2	5	60	500	430	2700
			100	280	240	1650
			120	230	200	1350
		10	60	420	380	2300
			75	330	300	1800
			95	250	230	1400
		20	30	640	650	1700
			50	370	380	1000
			83	210	210	560
		40	10	900	1150	1700
			20	280	350	550
			50	160	195	310

● ECS-22

Motor mounted	Acceleration/deceleration time sec	Screw lead	Weight kg	Overhang mm A	B	C
Straight / side/bottom	0.2	5	60	940	1100	3850
			100	540	620	2450
			150	340	400	2150
		10	60	800	980	3700
			100	460	540	2200
			150	280	350	1450
		25	50	600	790	1950
			80	360	480	1200
			120	220	290	750
		40	10	1950	2900	3500
			30	620	950	1400
			60	290	430	650

*When suspending from above, use 1/3 of the static allowable moment, dynamic allowable load, dynamic allowable moment, and overhang length. Use overhang length up to the center of gravity of the load within A, B and C directions.

Allowable overhang length (ECS Series)

[When installed vertically]

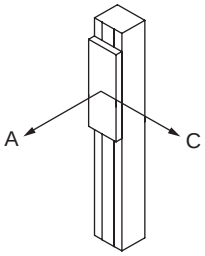

[Allowable overhang length]

● ECS-05

Motor mounted	Acceleration/deceleration time sec	Screw lead	Weight kg	Overhang mm A	Overhang mm C
Straight / side/bottom	0.2	2	3	80	80
			7	35	35
		5	3	65	65
		10	1.5	120	120

● ECS-06

Motor mounted	Acceleration/deceleration time sec	Screw lead	Weight kg	Overhang mm A	Overhang mm C
Straight / side/bottom	0.2	2	5	160	160
			15	53	53
		5	2	300	300
			4	150	150
			10	60	60
		10	1	410	410
			2	205	205
			5	82	82

● ECS-10

Motor mounted	Acceleration/deceleration time sec	Screw lead	Weight kg	Overhang mm A	Overhang mm C
Straight / side/bottom	0.2	5	5	310	310
			10	155	155
			12	130	130
		10	4	360	360
			6	240	240
			8	180	180
		16	1	1050	1050
			2	525	525
			5	210	210
		20	1	850	850
			2	425	425
			3	283	283

● ECS-12

Motor mounted	Acceleration/deceleration time sec	Screw lead	Weight kg	Overhang mm A	Overhang mm C
Straight / side/bottom	0.2	5	5	600	600
			10	300	300
			12	250	250
		10	4	650	650
			6	430	430
			8	320	320
		16	1	1050	1050
			2	525	525
			5	210	210
		20	3	650	700

● ECS-14 (200 W)

Motor mounted	Acceleration/deceleration time sec	Screw lead	Weight kg	Overhang mm A	Overhang mm C
Straight / side/bottom	0.2	5	20	755	755
			25	605	605
			27	560	560
		10	10	1350	1350
			15	900	900
			18	750	750
		16	2	2400	2400
			4	1700	1700
			7	1300	1300
		20	6	1200	1200

● ECS-14 (400 W)

Motor mounted	Acceleration/deceleration time sec	Screw lead	Weight kg	Overhang mm A	Overhang mm C
Straight / side/bottom	0.2	5	20	755	755
			25	605	605
			33	455	455
		10	10	1350	1350
			15	900	900
			22	650	650
		16	2	2400	2400
			4	1700	1700
			10	1000	1000
		20	4	1800	1800
			6	1200	1200
			8	900	900

● ECS-17 (400 W)

Motor mounted	Acceleration/deceleration time sec	Screw lead	Weight kg	Overhang mm A	Overhang mm C
Straight / side/bottom	0.2	5	20	1400	1400
			30	950	950
			40	700	700
		10	15	1700	1700
			25	1000	1000
			30	850	850
		20	5	2000	2000
			10	1800	1800
			14	1400	1400
		40	5	650	650

● ECS-17 (750 W)

Motor mounted	Acceleration/deceleration time sec	Screw lead	Weight kg	Overhang mm A	Overhang mm C
Straight / side/bottom	0.2	5	20	1500	1500
			30	1000	1000
			50	600	600
		10	15	1700	1700
			25	1000	1000
			40	620	620
		20	5	2200	2200
			10	1900	1900
			25	730	730
		40	10	700	700

● ECS-22

Motor mounted	Acceleration/deceleration time sec	Screw lead	Weight kg	Overhang mm A	Overhang mm C
Straight / side/bottom	0.2	5	30	2400	2400
			50	1450	1450
			55	1050	1050
		10	20	3000	3000
			30	2000	2000
			45	1350	1350
		25	15	2600	2600
			20	1950	1950
		40	5	2600	2600
			10	1950	1950

*When suspending from above, use 1/3 of the static allowable moment, dynamic allowable load, dynamic allowable moment, and overhang length. Use overhang length up to the center of gravity of the load within A, B and C directions.

MEMO

Origin sensor, limit sensor

	Manufacturer	Model
Outside mounted sensor	OMRON Corporation	EE-SX672
Inside mounted sensor	OMRON Corporation	EE-SX674

Performance

Item	Specifications
Hysteresis	0.025 mm or less
Light source (peak emission wavelength)	GaAs infrared LED (940 nm)
Indicator lamp	ON when receiving light (red)
Power supply voltage	5 to 24 VDC ±10% ripple (P-P) 10% or less
Current consumption	35 mA or less (NPN)
Control output	NPN: NPN open collector output 5 to 24 VDC 100 mA or less OFF state current 0.5 mA or less Residual voltage 0.8 V or less (at load current 100 mA) Residual voltage 0.4 V or less (at load current 40 mA)
Operating ambient illumination	Light-receiving surface luminance Fluorescent light: 1,000 lx or less
Ambient temperature range	When operating: -25 to +55°C When stored: -30 to +80°C (no condensation or freezing)
Ambient humidity range	When operating: 5 to 85% RH When stored: 5 to 95% RH (no condensation or freezing)
Degree of protection	IP50 IEC 60529 Standards
Cord length	2 m (Connector with cord [EE-1006 2M])

Output circuit

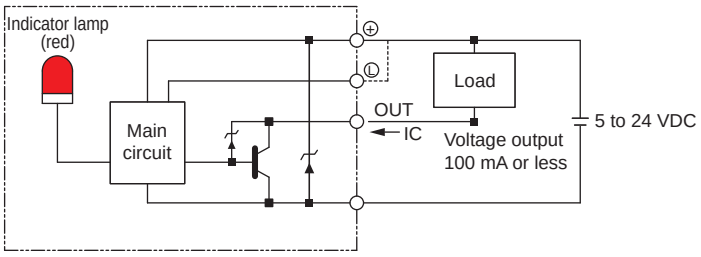

Wiring diagram

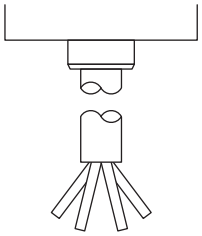

Terminal layout

Brown	5 to 24 VDC
Pink	L
Blue	0 V
Black	OUTPUT

Sensor dog dimensions

	Motor mounting direction
Body size	E/D/R/L
ECS-05	Fig. 1
ECS-06	Fig. 2

Fig. 1

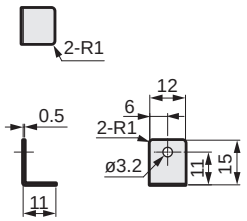

Fig. 2

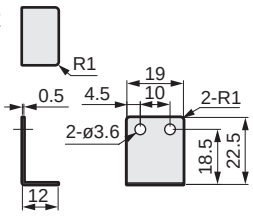

Body size	E/D/B	Motor mounting direction			
		R		L	
		Grease nipple None	Grease nipple Yes	Grease nipple None	Grease nipple Yes
ECS-10	Fig. 3	Fig. 3		Fig. 3	
ECS-12	Fig. 3	Fig. 3	Fig. 4	Fig. 3	Fig. 5

Body size	E/D/B	Motor mounting direction			
		R		L	
		Grease nipple None	Grease nipple Yes	Grease nipple None	Grease nipple Yes
ECS-14	Fig. 6	Fig. 6	Fig. 7	Fig. 6	Fig. 7
ECS-17	Fig. 6	Fig. 6	Fig. 7	Fig. 6	Fig. 7
ECS-22	Fig. 8	Fig. 8		Fig. 8	

Fig. 3

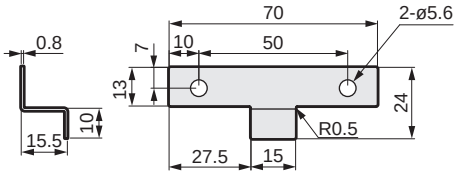

Fig. 4

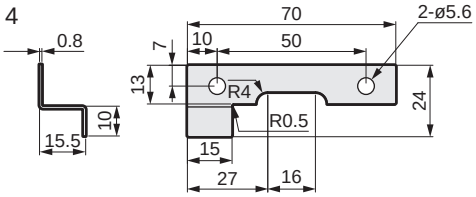

Fig. 5

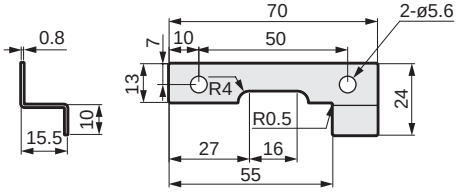

Fig. 6

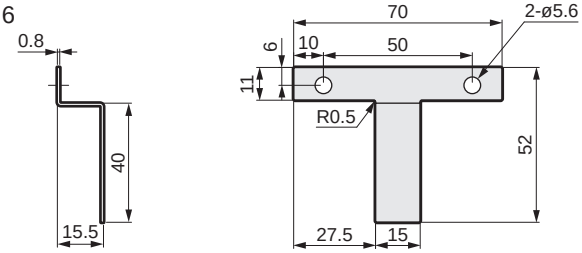

Fig. 7

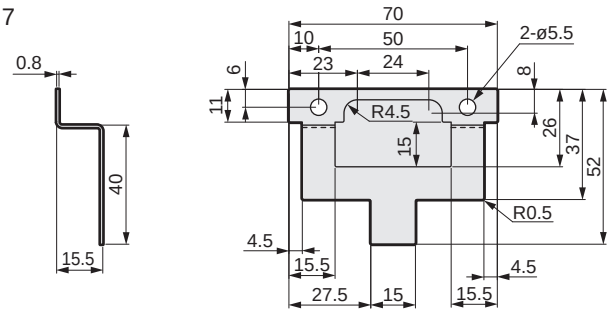

Fig. 8

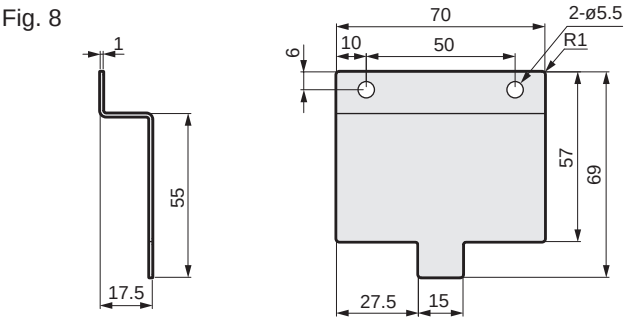

Grease nipple dimensions

*Horizontally symmetrical against the actuator.

● ECS-10

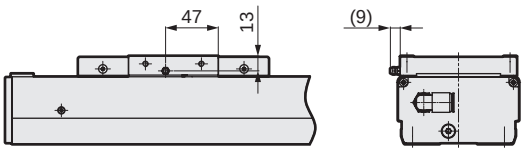

● ECS-12

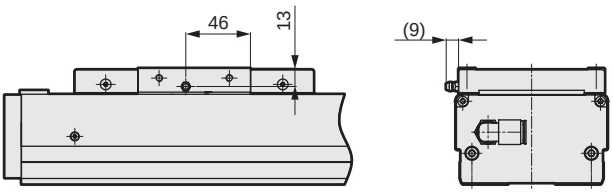

● ECS-14

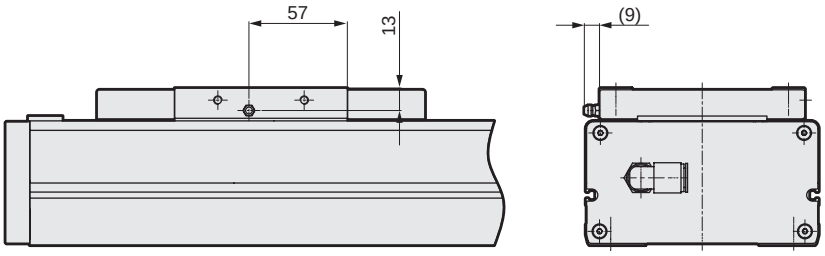

● ECS-17

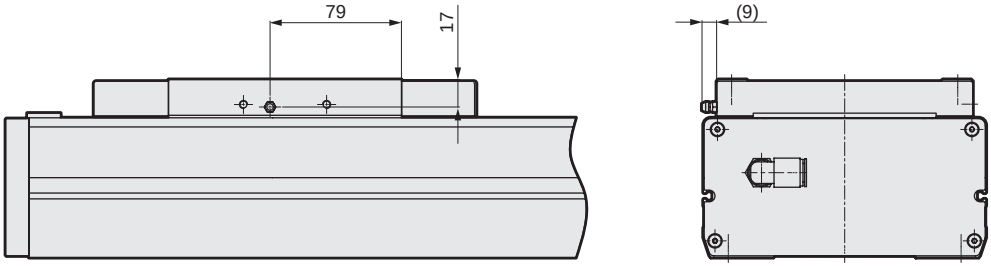

● ECS-22

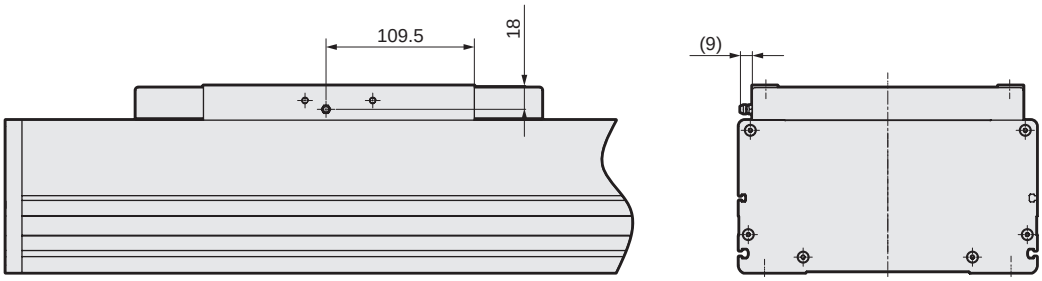

MEMO

List of attachments

Basic

Motor mounting bolt (common motor mounting direction)

Model No.	Mounted motor specification	Motor capacity	Size	Quantity
ECS-05 ECS-06 ECS-10 ECS-12	M	100 W	M4	2
	Y		M4	2
	P		M3	4
	F		M4	2
ECS-14	M	200 W 400 W	M5	4
	Y		M5	4
	P		M4	4
	F		M5	4
ECS-17	M	400 W	M5	4
	Y		M5	4
	P		M4	4
	F		M5	4
	M	750 W	M6	4
	Y		M6	4
	P		M5	4
	F		M6	4
ECS-22	M	750 W	M6	4
	Y		M6	4
	P		M5	4
	F		M6	4

By motor mounting direction

Model No.	Attachment name	Included quantity
E (external direct mounting) B (built-in)	Coupling (Assembled at shipment)	1
R (right-side mounting) L (left-side mounting) D (bottom mounting)	Timing belt	1
	Pulley	1

When origin/limit sensor is selected *1

Sensor mounting direction	Shipping format	Quantity
Inside sensor	Fixed position assembled at shipment	3 *2
Outside sensor	Included at shipment *3	

*1 Shipping format varies according to whether origin sensor and limit sensor are assembled inside or outside.
*2 When "None" is selected for origin sensor or limit sensor, the other sensor is also "None".
*3 Sensor mounting screws are also included.

Suction port fitting

Model No.	Fitting model No.	Shipping format	Quantity
ECS-05/ECS-06	GWL6-M5	Assembled at shipment	2
ECS-10 to ECS-22	GWL10-8	Included at shipment	1

Maintenance parts

● Maintenance parts set

Model No.	Compatibility	Components				
		(1)	(2)	(3)	(4)	(5)
		Timing belt 	Pulley 	Sensor dog 	Photoelectric bracket 	Roller unit 
ETS-08JP002-0001	ECS-05	○ (1 pc)	○ (1 pc)	○ (1 pc)	-	-
ETS-08JP002-0002	ECS-06	○ (2 pcs)	○ (1 pc)	○ (1 pc)	-	-
ECS-08JP002-0009	ECS-10	○ (3 pcs)	○ (2 pcs)	○ (1 pc)	○ (4 pcs)	○ (4 pcs)
ECS-08JP002-0010	ECS-12	○ (2 pcs)	○ (2 pcs)	○ (1 pc)	○ (4 pcs)	○ (4 pcs)
ECS-08JP002-0011	ECS-14	○ (2 pcs)	○ (3 pcs)	○ (1 pc)	-	○ (4 pcs)
ECS-08JP002-0012	ECS-17	○ (4 pcs)	○ (2 pcs)	○ (1 pc)	-	○ (4 pcs)
ECS-08JP002-0013	ECS-22	○ (3 pcs)	○ (2 pcs)	○ (1 pc)	-	○ (6 pcs)

● Maintenance parts (coupling)

Model No. 	Compatibility	Motor capacity	Hole diameter
ETS-22007-000136	ECS-05, 06	100 W	ø8
ETS-22007-000014	ECS-10, 12	100 W	ø8
ETS-22007-000289	ECS-10,12,14 (Mounted motor specification: F)	200W	ø9
ETS-22007-000016	ECS-10, 12, 14 (Mounted motor specification: P)	200 W	ø11
ETS-22007-000017	ECS-10, 12, 14 (Mounted motor specification: M, Y)	200 W/400 W	ø14
ETS-22007-000022	ECS-17 (Mounted motor specification: P)	400 W	ø14
ETS-22007-000358	ECS-17 (Mounted motor specification: F)	750 W	ø14
ETS-22007-000397	ECS-22 (Mounted motor specification: F)	750 W	ø14
ETS-22007-000024	ECS-17 (Mounted motor specification: M, Y)	750 W	ø19
ETS-22007-000029	ECS-22 (Mounted motor specification: M, Y, P)	750 W	ø19

● Maintenance parts (outside mounted sensor)

Basic price model No. 	Compatibility	Part
ETS-22008-000001	All models	Body
ETS-22008-000006		Cable

Dust generation characteristics Reference data

Test circuit

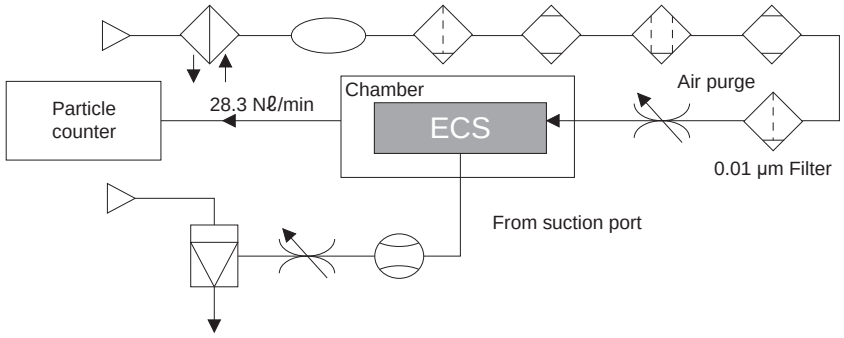

Measuring method

(1) Set a test sample in the acrylic resin chamber.

(2) Supply clean air at the same flow rate as the particle counter intake rate (28.3 N ℓ /min).

(3) Place the chamber in an ISO class 4 (class 10) clean bench.

(4) Activate the test sample, and measure changes in particle concentration over time during the specified measurement time.

(5) Test sample operating speed

Measuring conditions

Item		Description
Test sample	Model No.	Operating speed 400 mm/sec for ECS-06-10040
		Operating speed 800 mm/sec for ECS-14-20040
		Operating speed 800 mm/sec for ECS-17-20040
	Acceleration/deceleration time	0.3 sec
	Air intake	40.0 N ℓ /min for ECS-06-10040
		60.0 N ℓ /min for ECS-14-20040
		60.0 N ℓ /min for ECS-17-20040
Chamber	Internal capacity	28.3 N ℓ
Particle counter	Name	Laser dust monitor
	Min. measurable particle diameter	0.1 μm
	Intake	28.3 N ℓ /min
Setting conditions	Sampling	10 min
	Interval	40 min
	Measurement time	50 h

Dust generation data

The values in the data are measured values under the above conditions, and are not guaranteed.

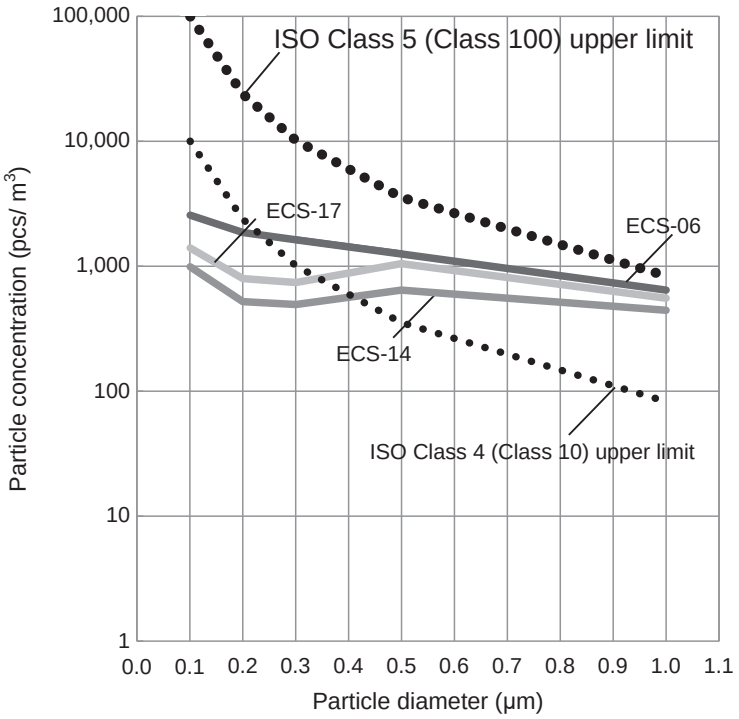

MEMO

Safety precautions

Stepper motor compatible				Servo motor compatible							
ECS	ETS	EBR	EBS	EKS	ECV	ETV	ECS	ETS Multi-Axis	ETS	EBR	EBS

ETV

Slider (belt drive)

Servo motor compatible electric actuator Motorless specification



CONTENTS

Product introduction	Intro Pages
Series variation	344
● Specifications/How to order/Dimensions	
· ETV-05	348
· ETV-06	352
· ETV-10	356
· ETV-14	364
· ETV-17	372
· ETV-22	380
● Model selection	388
● Technical data	390
⚠ Safety precautions	686
Model Selection Check Sheet	708

Series variation

Type	Model No.		Applicable motor capacity (W)	Body width (mm)	Lead equivalent (mm)	Max. load capacity (kg) Horizontal *1	Max. load capacity (kg) Vertical	Stroke length (mm) and max. speed (mm/s) *2	Page
Belt		ETV-05	100	50	40	3	—	Max. st: 800 mm; 2000mm/s; *3 0.8 sec.	348
		ETV-06	100	65	40	3	—	Max. st: 800 mm; 2000; 0.8 sec.	352
		ETV-10	100	102	32	10	—	Max. st: 2550 mm; 1600; 1.99 sec.	356
		ETV-14	200	135	40	25	—	Max. st: 3050 mm; 2000; 1.93 sec.	364
		ETV-17	400	170	40	45	—	Max. st: 3500 mm; 2000; 2.15 sec.	372
		ETV-22	750	220	40	85	—	Max. st: 3500 mm; 2000; 2.15 sec.	380

Stroke length (mm) and max. speed (mm/s) *2: 100, 300, 600, 800, 1000, 1200, 1400, 1600, 1800, 2000, 2200, 2400, 2600, 2800, 3000, 3200, 3400, 3600, 3800, 4000 mm

*1: The load capacity when wall mounted is the same as for horizontal mounting.
*2: The max. speed is the speed when the motor mounted by the customer can output a rotation speed of 3000 rpm.
*3: ⏱ shows the positioning time. Maximum stroke when installed horizontally and operated at max. speed and max. acceleration/deceleration. Note that this is not the value at maximum load capacity.

How to order

How to order

ETV - 06 - 40 010 - D M 1 X C B D P

(A) (B) (C) (D) (E) (F) (G) (H) (I) (J) (K)

(A) Body size *4

05	Body width 50 mm
06	Body width 65 mm
10	Body width 102 mm
14	Body width 135 mm
17	Body width 170 mm
22	Body width 220 mm

(B) Lead equivalent *1

32	32 mm
40	40 mm

(C) Stroke length

010	100 mm
to	(In 50 mm increments)
350	3500 mm

(D) Motor mounting direction *2

U	Top mounting
D	Bottom mounting
R	Right mounting
S	Right top mounting
T	Right bottom mounting
L	Left mounting
V	Left top mounting
W	Left bottom mounting

(E) Mounted motor specification

M	Refer to the list on the page at right
Y	
P	
F	

(F) Motor capacity

1	100 W
2	200 W
4	400 W
8	750 W

(G) Driving belt *4

X	Standard (rubber)
L	Low dust generation (urethane)

(H) Origin sensor *3

N	None
C	Outside, motor side (included at shipment)
D	Outside, motor opposite side (included at shipment)

(I) Limit sensor *3

N	None
B	Outside (included at shipment)

(J) Grease nipple

N	None (Body mounting direction: Standard)
D	None (Body mounting direction: Bottom side)
R	Right
L	Left

(K) Positioning pin hole

N	None
P	Yes

*1: Only ETV-10 supports 32 mm.
*2: Only ETV-05 and 06 support U and D.
Other sizes support only R, S, T, L, V and W.
*3: The sensor dog is assembled at shipment regardless of sensor presence.
*4: For body sizes 05 and 06, Belt L cannot be selected.

Manufacturer	50 W	100 W	200 W	400 W	750 W
Mitsubishi Electric Corporation	M	M	M	M	M
Delta Electronics Co., Ltd.	M	M	M	M	M
Sanyo Denki Co., Ltd.	M	M	M	M	-
YASKAWA Electric Corporation	Y	Y	Y	Y	Y
Keyence Corporation	Y	Y	Y	Y	Y
Panasonic Corporation	P	P	P	P	P
OMRON Corporation	M	M	P	P	P
Fuji Electric Co., Ltd.	M	M	M	M	M
FANUC CORPORATION	F	F	F	F	F
Bosch Rexroth AG	P	P	P	P	P
Rockwell Automation, Inc.	M	M	M	M	M
SIEMENS AG	M	M	M	M	M

Example of model No.

ETV-06-40010-DM1XCBDP

(A) Body size : 06 Series
(B) Lead equivalent : 40 mm
(C) Stroke length : 100 mm
(D) Motor mounting direction : Bottom side mounting
(E) Mounted motor specification : M (refer to the table on the page at right)
(F) Motor capacity : 100 W
(G) Driving belt : Standard (rubber)
(H) Origin sensor : Outside motor side
(I) Limit sensor : Outside
(J) Grease nipple : None (Body mounting method: Bottom side)
(K) Positioning pin hole : Yes

*This product is composed of an actuator (and motor mounting parts) only; there is no motor attached.
The user must prepare, mount, and adjust the motor and driver.

List of servo motors recommended for mounting

Code	Manufacturer	Series	100 W (ETV-05/06/10 Series)
M	Mitsubishi Electric Corporation	MELSERVO J4	HG-KR13
		MELSERVO J5	HK-KT13W
M	Delta Electronics Co., Ltd.	ECMA-C	ECMA-C10401
M	Sanyo Corporation, Ltd.	SANMOTION R	R2□A04010
Y	YASKAWA Electric Corporation	Σ-V	SGMJV-01
		Σ-7	SGM7J-01
Y	Keyence Corporation	SV	SV-□010
		SV2	SV2-□010
P	Panasonic Corporation	MINAS A5	MSMD01
		MINAS A6	MSMF01
M	OMRON Corporation	G5	R88M-K10030
		1S	R88M-1M10030
M	Fuji Electric Co., Ltd.	ALPHA7 GYS	GYS101D7-□B2□
		ALPHA7 GYB	—
F	FANUC CORPORATION	βiS-B	A06B-0112-B1
P	Bosch Rexroth AG	MSM	MSM019B
M	Rockwell Automation, Inc.	TLP	TLP-A046-010-DKA□2
M	SIEMENS AG	1FK2 *1	1FK2102-1AG0

Code	Manufacturer	Series	200 W (ETV-14 Series)	400 W (ETV-17 Series)	750 W (ETV-22 Series)
M	Mitsubishi Electric Corporation	MELSERVO J4	HG-KR23	HG-KR43	HG-KR73
		MELSERVO J5	HK-KT23W	HK-KT43W	HK-KT7M3W
M	Delta Electronics Co., Ltd.	ECMA-C	ECMA-C10602	ECMA-C10604	ECMA-C10807
M	Sanyo Corporation, Ltd.	SANMOTION R	R2□A06020	R2□A06040	—
Y	YASKAWA Electric Corporation	Σ-V	SGMJV-02	SGMJV-04	SGMJV-08
		Σ-7	SGM7J-02	SGM7J-04	SGM7J-08
Y	Keyence Corporation	SV	SV-□020	SV-□040	SV-□075
		SV2	SV2-□020	SV2-□040	SV2-□075
P	Panasonic Corporation	MINAS A5	MSMD02	MSMD04	MSMD08
		MINAS A6	MSMF02	MSMF04	MSMF08
P	OMRON Corporation	G5	R88M-K20030	R88M-K40030	R88M-K75030
		1S	R88M-1M20030	R88M-1M40030	R88M-1M75030
M	Fuji Electric Co., Ltd.	ALPHA7 GYS	GYS201D7-□B2□	GYS401D7-□B2□	GYS751D7-□B2□
		ALPHA7 GYB	GYB201D7-□B2□	GYB401D7-□B2□	GYB751D7-□B2□
F	FANUC CORPORATION	βiS-B	A06B-2115-B1	A06B-2116-B1	A06B-2063-B1
P	Bosch Rexroth AG	MSM	MSM031B	MSM031C	MSM041B
M	Rockwell Automation, Inc.	TLP	TLP-A070-020-DKA□2	TLP-A070-040-DKA□2	TLP-A090-075-DKA□2
M	SIEMENS AG	1FK2 *1	1FK2203-2AG0	1FK2203-4AG0	1FK2204-5AK0

*Contact CKD for mounting other than the above motors and products of other motor manufacturers.
*1: The servo motor is subject to the regulations of Export Trade Control Order Appendix Table 1 Item 7 (8), and is applicable with regard to its specifications. (as of January 2021)

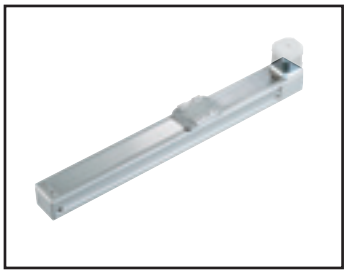

Electric actuator Belt

ETV-05 Series

Motor side mounting (left, right, bottom)

● Servo motor capacity: 100 W

How to order

ETV - 05 - 40 010 - U M 1 X N N N N

Ⓐ Body size

05	Body width 50 mm

Ⓑ Lead equivalent

40	40 mm

Ⓒ Stroke length

010 to 080	100 mm (In 50 mm increments) 800 mm

Ⓓ Motor mounting direction

U	Top mounting
D	Bottom mounting

Ⓔ Mounted motor specification

M, Y, P, F	Select the mounted motor specification from the table below.

Ⓕ Motor capacity

1	100 W

Ⓖ Driving belt

X	Standard (rubber)

Ⓗ Origin sensor (1 pc) *1 *2

N	None
C	Outside motor side
D	Outside motor opposite side

Ⓘ Limit sensor (2 pcs) *1 *2

N	None
B	Outside

Ⓙ Grease nipple *3

N	None (Body mounting direction: Standard)

Ⓚ Positioning pin hole

N	None
P	Yes

Manufacturer	100 W
Mitsubishi Electric Corporation	M
Delta Electronics Co., Ltd.	M
Sanyo Denki Co., Ltd.	M
YASKAWA Electric Corporation	Y
Keyence Corporation	Y
Panasonic Corporation	P
OMRON Corporation	M
Fuji Electric Co., Ltd.	M
FANUC CORPORATION	F
Bosch Rexroth AG	P
Rockwell Automation, Inc.	M
SIEMENS AG	M

*Refer to page 347 for the motor model No.

*1: Origin sensor and limit sensor are available as a set. As it is both-or-nothing, select "None" for both.
*2: The user can adjust the sensor position. (Included at shipment)
*3: "Body mounting direction: Standard" here refers to mounting from the bottom side.

Specifications

Applicable motor capacity		100 W servo motor
Drive method		Belt width 9 mm
Stroke length	mm	100 to 800
Lead equivalent	mm	40
Max. load capacity *1	Horizontal kg	3
	Vertical kg	-
Max. speed	mm/s	2000
Rated thrust *1	N	42
Repeatability	mm	±0.08
Lost motion		0.2 mm or less
Dynamic allowable load	N	551.1
Static allowable moment	N·m	MP: 20, MY: 16, MR: 19
Dynamic allowable moment	N·m	MP: 2.8, MY: 2.8, MR: 6.8
Operating ambient temperature, humidity		0 to 40°C (no freezing) 35 to 80% RH (no condensation)
Storage ambient temperature, humidity		-10 to 50°C (no freezing) 35 to 80% RH (no condensation)
Atmosphere		No corrosive gas, explosive gas, or dust

*1 Rated thrust and max. load capacity are guideline values assuming that the motor mounted will output the rated torque.

Stroke and max. speed

(mm/s)

Lead equivalent \ Stroke length	100 to 800
40	2000

*The max. speed is the speed when the motor mounted by the customer can output a rotation speed of 3000 rpm.

Allowable overhang length

*Refer to page 390 for details.

Moment direction

MP MY MR

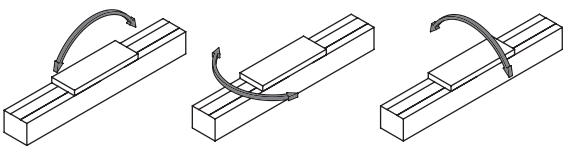

Dimensions Motor top mounting

● ETV-05-*****-U

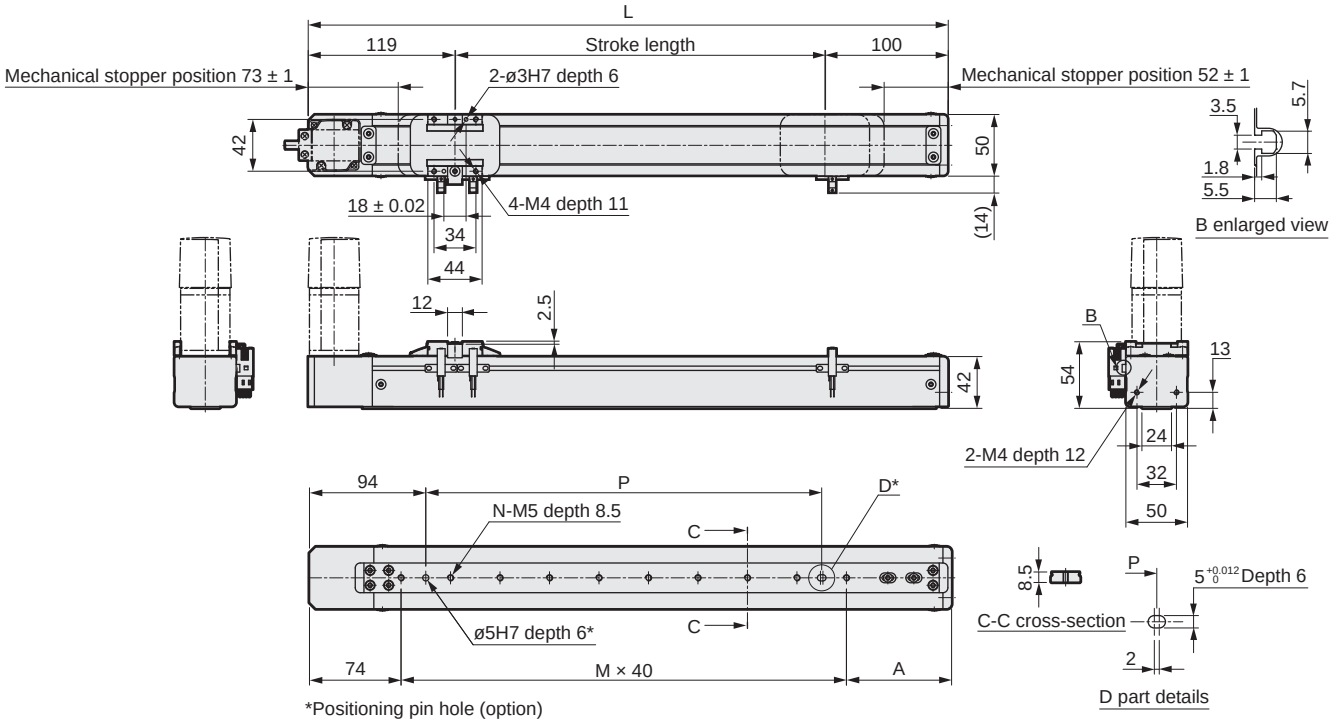

*Positioning pin hole (option)

Stroke length (mm)	100	150	200	250	300	350	400	450	500	550	600	650	700	750	800
L	319	369	419	469	519	569	619	669	719	769	819	869	919	969	1019
A	85	95	65	75	85	95	65	75	85	95	65	75	85	95	65
M	4	5	7	8	9	10	12	13	14	15	17	18	19	20	22
N	5	6	8	9	10	11	13	14	15	16	18	19	20	21	23
P	120	160	240	280	320	360	440	480	520	560	640	680	720	760	800
Weight (kg)	2.2	2.3	2.4	2.5	2.7	2.8	2.8	3.0	3.1	3.2	3.3	3.4	3.5	3.6	3.7

Motor mounting part

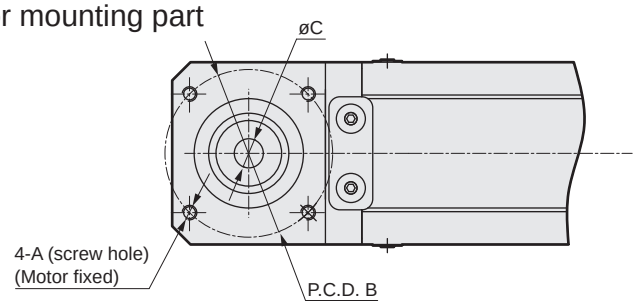

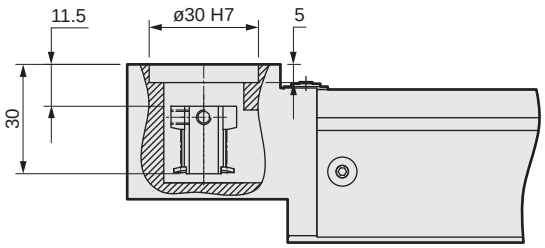

Mounted motor specification		A	B	C	Motor mounting bolt
M	100 W	M4	ø46	ø8	4-M4 × L12
Y	100 W	M4	ø46	ø8	4-M4 × L12
P	100 W	M3	ø45	ø8	4-M3 × L12
F	100 W	M4	ø46	ø8	4-M4 × L12

List of attachments

[Motor mounting parts]

Mounted motor specification	Timing belt, pulley	Motor capacity	Motor mounting bolt	
			Size	Quantity
M	Included at shipment	100 W	M4	2
Y			M4	2
P			M3	4
F			M4	2

[Origin sensor/Limit sensor]

Manufacturer	Model	Quantity
OMRON Corporation	EE-SX672	3

*Refer to page 392 for sensor specifications.

Dimensions Motor bottom mounting

● ETV-05-*****-D

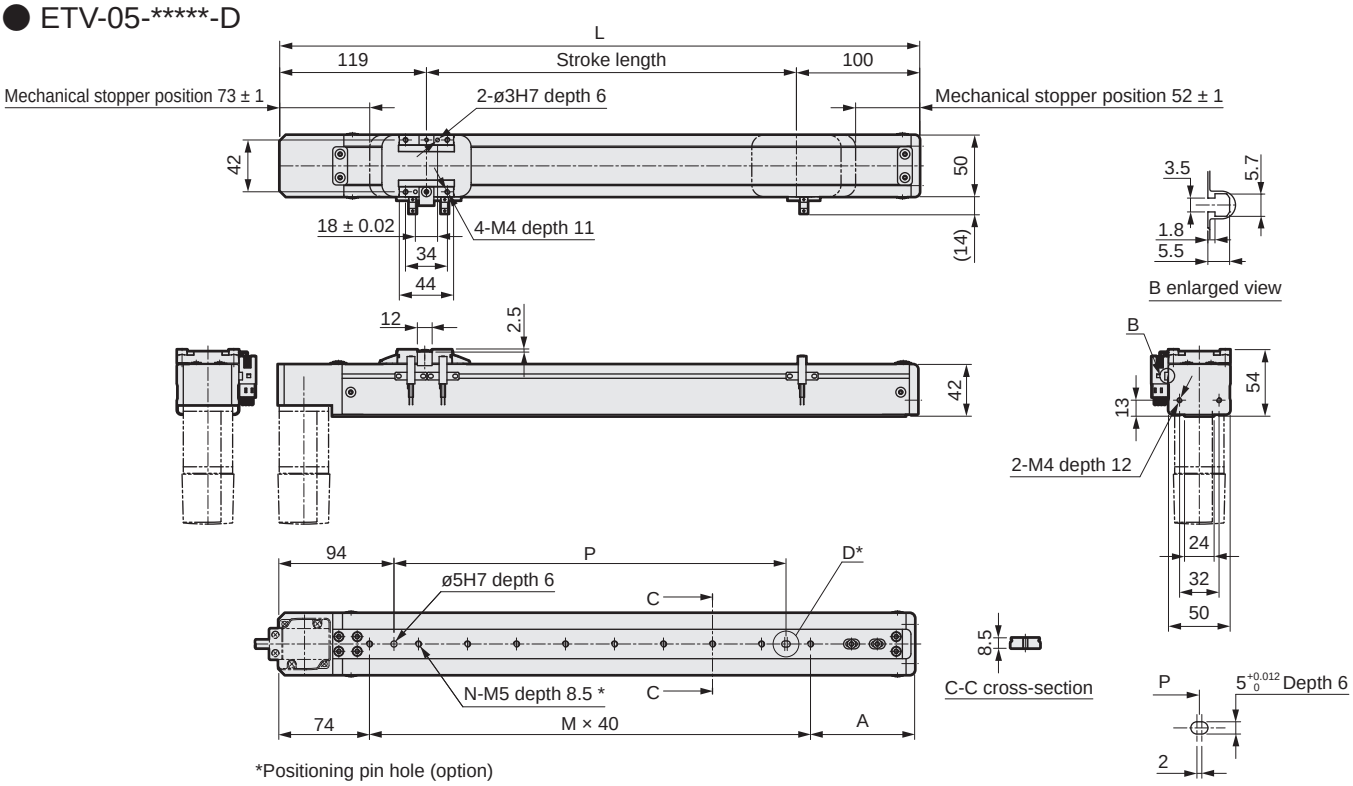

*Positioning pin hole (option)

Stroke length (mm)	100	150	200	250	300	350	400	450	500	550	600	650	700	750	800
L	319	369	419	469	519	569	619	669	719	769	819	869	919	969	1019
A	85	95	65	75	85	95	65	75	85	95	65	75	85	95	65
M	4	5	7	8	9	10	12	13	14	15	17	18	19	20	22
N	5	6	8	9	10	11	13	14	15	16	18	19	20	21	23
P	120	160	240	280	320	360	440	480	520	560	640	680	720	760	800
Weight (kg)	2.2	2.3	2.4	2.5	2.7	2.8	2.8	3.0	3.1	3.2	3.3	3.4	3.5	3.6	3.7

Motor mounting part

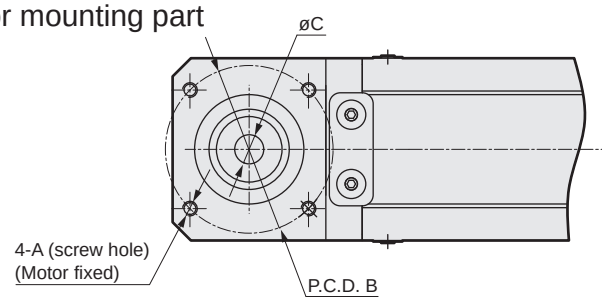

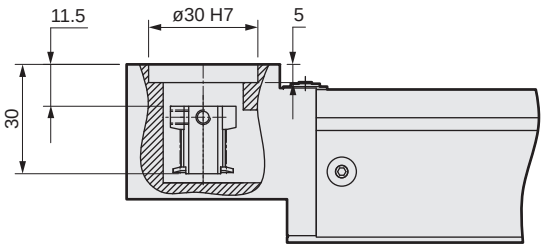

Mounted motor specification		A	B	C	Motor mounting bolt
M	100 W	M4	ø46	ø8	4-M4 × L12
Y	100 W	M4	ø46	ø8	4-M4 × L12
P	100 W	M3	ø45	ø8	4-M3 × L12
F	100 W	M4	ø46	ø8	4-M4 × L12

List of attachments

[Motor mounting parts]

Mounted motor specification	Timing belt, pulley	Motor capacity	Motor mounting bolt	
			Size	Quantity
M	Included at shipment	100 W	M4	2
Y			M4	2
P			M3	4
F			M4	2

[Origin sensor/Limit sensor]

Manufacturer	Model	Quantity
OMRON Corporation	EE-SX672	3

*Refer to page 392 for sensor specifications.

MEMO

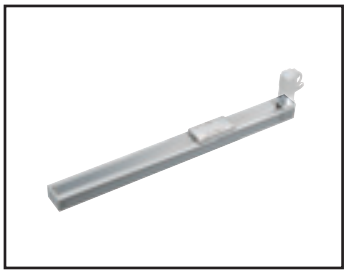

Electric actuator Belt

ETV-06 Series

Motor side mounting (left, right, bottom)

● Servo motor capacity: 100 W

How to order

ETV - 06 - 40 010 - U M 1 X N N N N

Ⓐ Body size

06	Body width 65 mm

Ⓑ Lead equivalent

40	40 mm

Ⓒ Stroke length

010 to 080	100 mm (In 50 mm increments) 800 mm

Ⓓ Motor mounting direction

U	Top mounting
D	Bottom mounting

Ⓔ Mounted motor specification

M, Y, P, F	Select the mounted motor specification from the table below.

Ⓕ Motor capacity

1	100 W

Ⓖ Driving belt

X	Standard (rubber)

Ⓗ Origin sensor (1 pc) *1 *2

N	None
C	Outside motor side
D	Outside motor opposite side

Ⓘ Limit sensor (2 pcs) *1 *2

N	None
B	Outside

Ⓙ Grease nipple *3 *4

N	None (Body mounting direction: Standard)
D	None (Body mounting direction: Bottom side)

Ⓚ Positioning pin hole

N	None
P	Yes

*1: Origin sensor and limit sensor are available as a set. As it is both-or-nothing, select "None" for both.
*2: The user can adjust the sensor position. (Included at shipment)
*3: Select the body mounting direction. N (top side ø4.5 spot face) or D (M5 from bottom side bottom surface)
*4: "Body mounting direction: Standard" here refers to mounting from the top.

Manufacturer	100 W
Mitsubishi Electric Corporation	M
Delta Electronics Co., Ltd.	M
Sanyo Denki Co., Ltd.	M
YASKAWA Electric Corporation	Y
Keyence Corporation	Y
Panasonic Corporation	P
OMRON Corporation	M
Fuji Electric Co., Ltd.	M
FANUC CORPORATION	F
Bosch Rexroth AG	P
Rockwell Automation, Inc.	M
SIEMENS AG	M

*Refer to page 347 for the motor model No.

Specifications

Applicable motor capacity		100 W servo motor
Drive method		Belt width 12 mm
Stroke length	mm	100 to 800
Lead equivalent	mm	40
Max. load capacity *1	Horizontal kg	3
	Vertical kg	-
Max. speed	mm/s	2000
Rated thrust *1	N	42
Repeatability	mm	±0.08
Lost motion		0.2 mm or less
Dynamic allowable load	N	1209.1
Static allowable moment	N·m	MP: 80, MY: 70, MR: 75
Dynamic allowable moment	N·m	MP: 8.9, MY: 8.9, MR: 24.8
Operating ambient temperature, humidity		0 to 40°C (no freezing) 35 to 80% RH (no condensation)
Storage ambient temperature, humidity		-10 to 50°C (no freezing) 35 to 80% RH (no condensation)
Atmosphere		No corrosive gas, explosive gas, or dust

*1 Rated thrust and max. load capacity are guideline values assuming that the motor mounted will output the rated torque.

Stroke and max. speed

(mm/s)

Lead equivalent \ Stroke length	100 to 800
40	2000

*The max. speed is the speed when the motor mounted by the customer can output a rotation speed of 3000 rpm.

Allowable overhang length

*Refer to page 390 for details.

Moment direction

MP MY MR

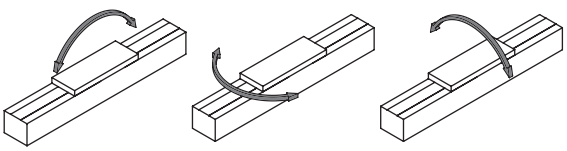

Dimensions Motor top mounting

● ETV-06-*****-U

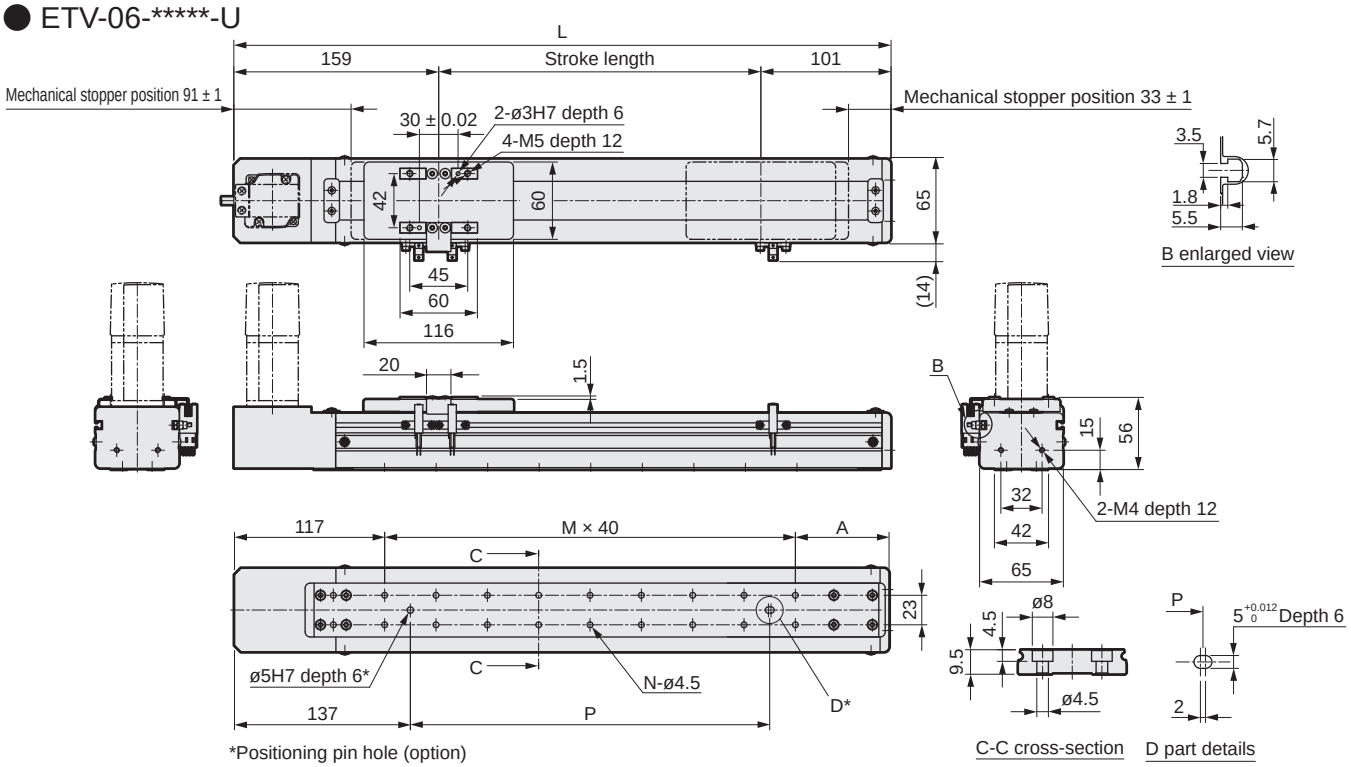

*Positioning pin hole (option)

Stroke length (mm)	100	150	200	250	300	350	400	450	500	550	600	650	700	750	800
L	360	410	460	510	560	610	660	710	760	810	860	910	960	1010	1060
A	83	93	63	73	83	93	63	73	83	93	63	73	83	93	63
M	4	5	7	8	9	10	12	13	14	15	17	18	19	20	22
N	10	12	16	18	20	22	26	28	30	32	36	38	40	42	46
P	120	160	240	280	320	360	440	480	520	560	640	680	720	760	840
Weight (kg)	2.5	2.6	2.8	3.0	3.3	3.4	3.5	3.7	3.9	4.1	4.2	4.4	4.6	4.8	4.9

*N-M5 when Ⓙ Grease nipple is D.

Motor mounting part

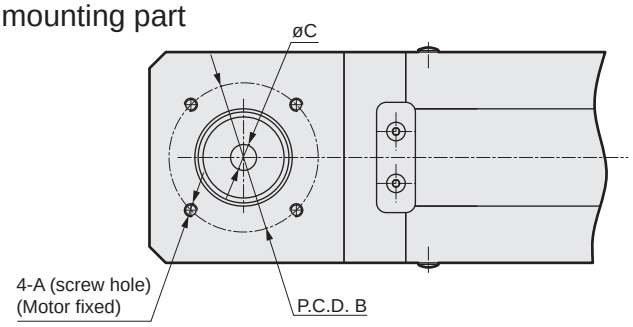

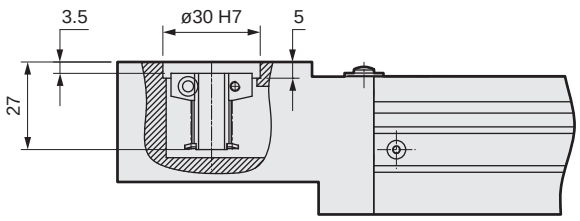

Mounted motor specification		A	B	C	Motor mounting bolt
M	100 W	M4	ø46	ø8	4-M4 × L12
Y	100 W	M4	ø46	ø8	4-M4 × L12
P	100 W	M3	ø45	ø8	4-M3 × L12
F	100 W	M4	ø46	ø8	4-M4 × L12

List of attachments

[Motor mounting parts]

Mounted motor specification	Timing belt, pulley	Motor capacity	Motor mounting bolt	
			Size	Quantity
M	Included at shipment	100 W	M4	2
Y			M4	2
P			M3	4
F			M4	2

[Origin sensor/Limit sensor]

Manufacturer	Model	Quantity
OMRON Corporation	EE-SX672	3

*Refer to page 392 for sensor specifications.

Dimensions Motor bottom mounting

● ETV-06-*****-D

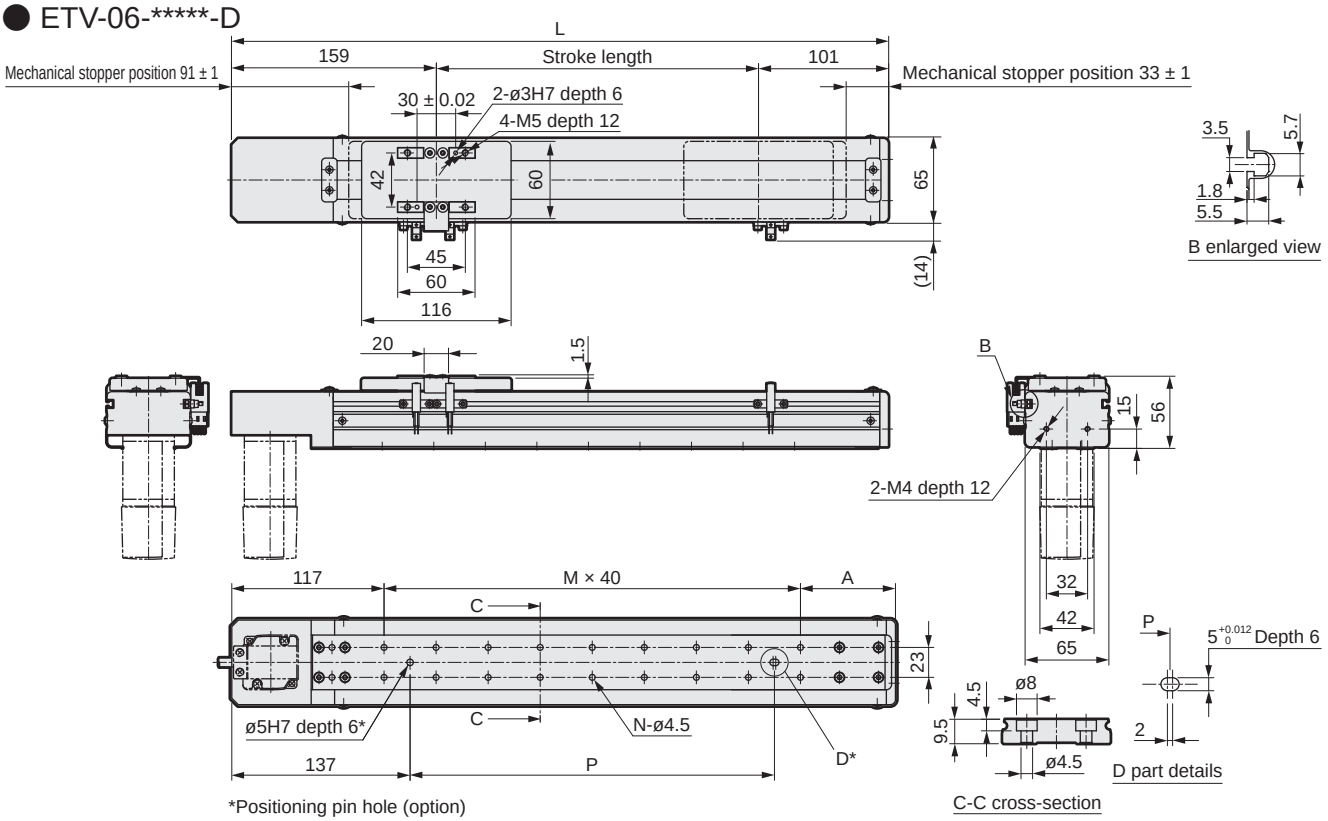

*Positioning pin hole (option)

Stroke length (mm)	100	150	200	250	300	350	400	450	500	550	600	650	700	750	800
L	360	410	460	510	560	610	660	710	760	810	860	910	960	1010	1060
A	83	93	63	73	83	93	63	73	83	93	63	73	83	93	63
M	4	5	7	8	9	10	12	13	14	15	17	18	19	20	22
N	10	12	16	18	20	22	26	28	30	32	36	38	40	42	46
P	120	160	240	280	320	360	440	480	520	560	640	680	720	760	840
Weight (kg)	2.5	2.6	2.8	3.0	3.3	3.4	3.5	3.7	3.9	4.1	4.2	4.4	4.6	4.8	4.9

Motor mounting part

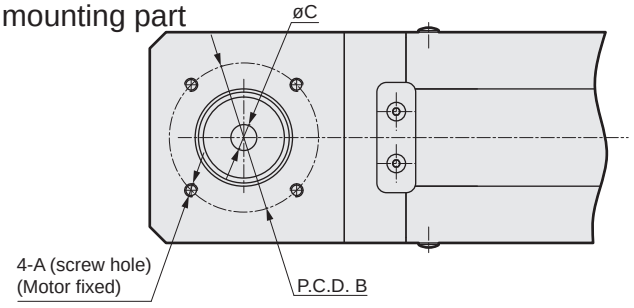

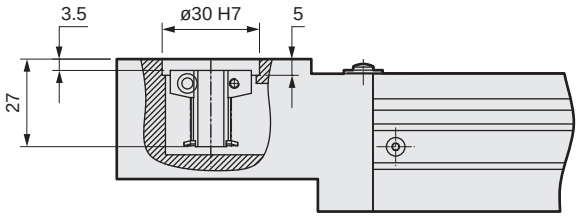

Mounted motor specification		A	B	C	Motor mounting bolt
M	100 W	M4	ø46	ø8	4-M4 × L12
Y	100 W	M4	ø46	ø8	4-M4 × L12
P	100 W	M3	ø45	ø8	4-M3 × L12
F	100 W	M4	ø46	ø8	4-M4 × L12

List of attachments

[Motor mounting parts]

Mounted motor specification	Timing belt, pulley	Motor capacity	Motor mounting bolt	
			Size	Quantity
M	Included at shipment	100 W	M4	2
Y			M4	2
P			M3	4
F			M4	2

[Origin sensor/Limit sensor]

Manufacturer	Model	Quantity
OMRON Corporation	EE-SX672	3

*Refer to page 392 for sensor specifications.

MEMO

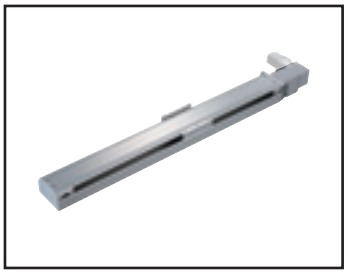

Electric actuator Belt

ETV-10 Series

Motor side mounting (left, right, bottom)

● Servo motor capacity: 100 W

How to order

ETV - 10 - 32 010 - R M 1 X N N N N

Ⓐ 10

Ⓑ 32

Ⓒ 010

Ⓓ R

Ⓔ M

Ⓕ 1

Ⓖ X

Ⓗ N

Ⓘ N

Ⓙ N

Ⓚ N

Ⓐ Body size

10	Body width 102 mm

Ⓑ Lead equivalent

32	32 mm

Ⓒ Stroke length

010 to 255	100 mm (In 50 mm increments) 2550 mm

Ⓓ Motor mounting direction *5

R	Right mounting
S	Right top mounting
T	Right bottom mounting
L	Left mounting
V	Left top mounting
W	Left bottom mounting

Ⓔ Mounted motor specification

M	Select the mounted motor specification from the table below.
Y	
P	
F	

Ⓕ Motor capacity

1	100 W

Ⓖ Driving belt

X	Standard (rubber)
L	Low dust generation (urethane)

Ⓗ Origin sensor (1 pc) *1 *2 *3

N	None
C	Outside motor side
D	Outside motor opposite side

Ⓘ Limit sensor (2 pcs) *1 *2 *3

N	None
B	Outside

Ⓙ Grease nipple *3 *4 *5

N	None (Body mounting direction: Standard)
R	Right
L	Left

Ⓚ Positioning pin hole

N	None
P	Yes

*1: Origin sensor and limit sensor are available as a set. As it is both-or-nothing, select "None" for both.
*2: The user can adjust the sensor position. (Included at shipment)
*3: Contact CKD to use the origin sensor, limit sensor and grease nipple in the same direction.
*4: "Body mounting direction: Standard" here indicates that either top or bottom mounting is possible.
*5: When selecting motor mounting direction R, S, or T, grease nipple R cannot be selected.
When selecting L, V, or W, grease nipple L cannot be selected.

Manufacturer	100 W
Mitsubishi Electric Corporation	M
Delta Electronics Co., Ltd.	M
Sanyo Denki Co., Ltd.	M
YASKAWA Electric Corporation	Y
Keyence Corporation	Y
Panasonic Corporation	P
OMRON Corporation	M
Fuji Electric Co., Ltd.	M
FANUC CORPORATION	F
Bosch Rexroth AG	P
Rockwell Automation, Inc.	M
SIEMENS AG	M

*Refer to page 347 for the motor model No.

Specifications

Applicable motor capacity		100 W servo motor
Drive method		Belt width 15 mm
Stroke length	mm	100 to 2550
Lead equivalent	mm	32
Max. load capacity *1	Horizontal kg	10
	Vertical kg	-
Max. speed	mm/s	1600
Rated thrust *1	N	61
Repeatability	mm	±0.04
Lost motion		0.1 mm or less
Dynamic allowable load	N	2651.4
Static allowable moment	N·m	MP: 110, MY: 110, MR: 120
Dynamic allowable moment	N·m	MP: 24.1, MY: 24.1, MR: 24.8
Operating ambient temperature, humidity		0 to 40°C (no freezing) 35 to 80% RH (no condensation)
Storage ambient temperature, humidity		-10 to 50°C (no freezing) 35 to 80% RH (no condensation)
Atmosphere		No corrosive gas, explosive gas, or dust

*1 Rated thrust and max. load capacity are guideline values assuming that the motor mounted will output the rated torque.

Stroke and max. speed

(mm/s)

Lead equivalent \ Stroke length	100 to 2550
32	1600

*The max. speed is the speed when the motor mounted by the customer can output a rotation speed of 3000 rpm.

Allowable overhang length

*Refer to page 390 for details.

Moment direction

MP

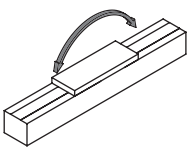

MY

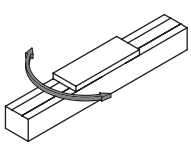

MR

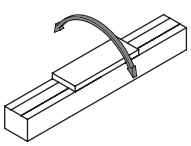

Dimensions Motor right-side mounting

● ETV-10-*****-R

· Refer to page 394 for grease nipple dimensions.

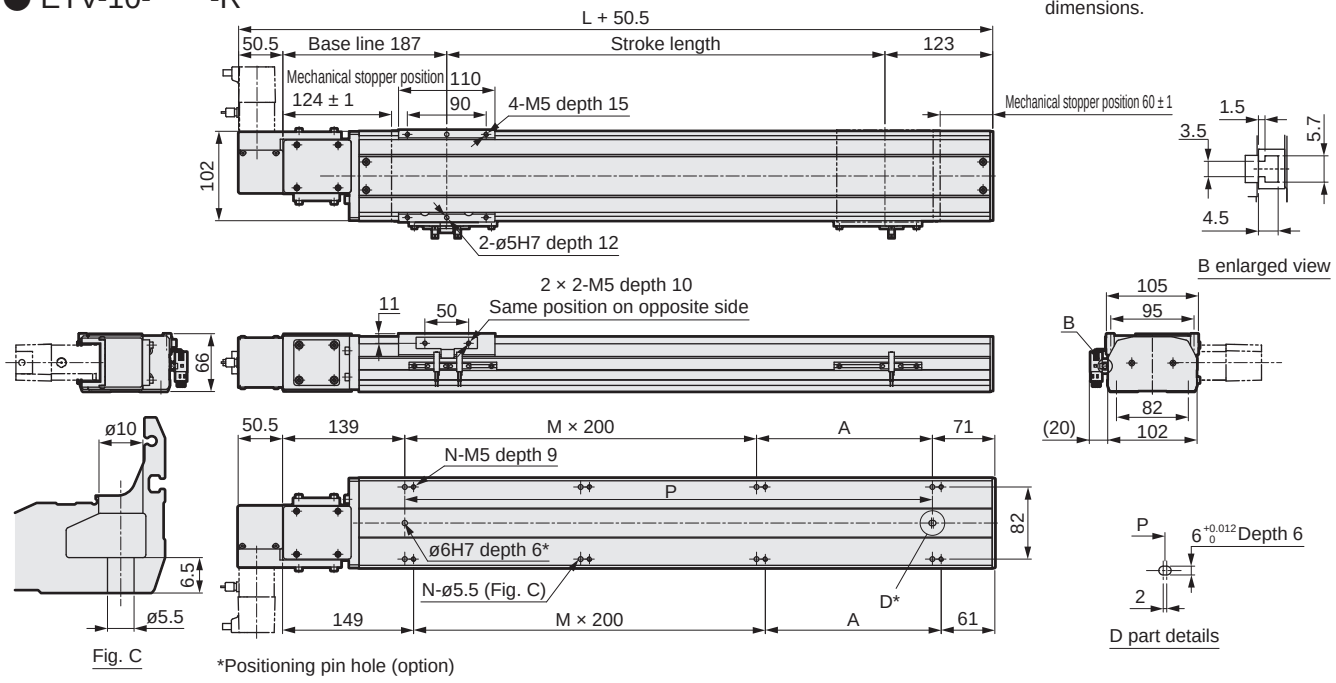

Stroke length (mm)	100	150	200	250	300	350	400	450	500	550	600	650	700	750	800	850	900	950	1000	1050	1100	1150	1200	1250	1300
L	410	460	510	560	610	660	710	760	810	860	910	960	1010	1060	1110	1160	1210	1260	1310	1360	1410	1460	1510	1560	1610
A	200	50	100	150	200	50	100	150	200	50	100	150	200	50	100	150	200	50	100	150	200	50	100	150	200
M	0	1	1	1	1	2	2	2	2	3	3	3	3	4	4	4	4	5	5	5	5	6	6	6	6
N	4	6	6	6	6	8	8	8	8	10	10	10	10	12	12	12	12	14	14	14	14	16	16	16	16
P	200	250	300	350	400	450	500	550	600	650	700	750	800	850	900	950	1000	1050	1100	1150	1200	1250	1300	1350	1400
Weight (kg)	6.8	7.2	7.7	8.1	8.5	8.9	9.3	9.8	10.2	10.6	11.0	11.5	11.9	12.3	12.7	13.2	13.6	14.0	14.4	14.8	15.3	15.7	16.1	16.5	16.9

Stroke length (mm)	1350	1400	1450	1500	1550	1600	1650	1700	1750	1800	1850	1900	1950	2000	2050	2100	2150	2200	2250	2300	2350	2400	2450	2500	2550
L	1660	1710	1760	1810	1860	1910	1960	2010	2060	2110	2160	2210	2260	2310	2360	2410	2460	2510	2560	2610	2660	2710	2760	2810	2860
A	50	100	150	200	50	100	150	200	50	100	150	200	50	100	150	200	50	100	150	200	50	100	150	200	50
M	7	7	7	7	8	8	8	8	9	9	9	9	10	10	10	10	11	11	11	11	12	12	12	12	13
N	18	18	18	18	20	20	20	20	22	22	22	22	24	24	24	24	26	26	26	26	28	28	28	28	30
P	1450	1500	1550	1600	1650	1700	1750	1800	1850	1900	1950	2000	2050	2100	2150	2200	2250	2300	2350	2400	2450	2500	2550	2600	2650
Weight (kg)	17.4	17.8	18.2	18.6	19.0	19.5	19.9	20.3	20.7	21.1	21.6	22.0	22.4	22.8	23.2	23.7	24.1	24.5	24.9	25.3	25.8	26.2	26.6	27.0	27.4

Motor mounting part

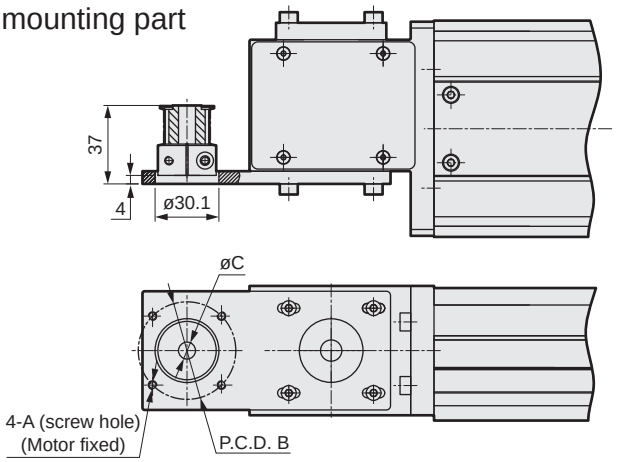

Mounted motor specification		A	B	C	Motor mounting bolt
M	100 W	M4	ø46	ø8	4-M4 × L12
Y	100 W	M4	ø46	ø8	4-M4 × L12
P	100 W	M3	ø45	ø8	4-M3 × L12
F	100 W	M4	ø46	ø8	4-M4 × L12

List of attachments

[Motor mounting parts]

Mounted motor specification	Timing belt, pulley	Motor capacity	Motor mounting bolt	
			Size	Quantity
M	Included at shipment	100 W	M4	2
Y			M4	2
P			M3	4
F			M4	2

[Origin sensor/Limit sensor]

Manufacturer	Model	Quantity
OMRON Corporation	EE-SX672	3

*Refer to page 392 for sensor specifications.

Dimensions Motor right top mounting

● ETV-10-*****-S

· Refer to page 394 for grease nipple dimensions.

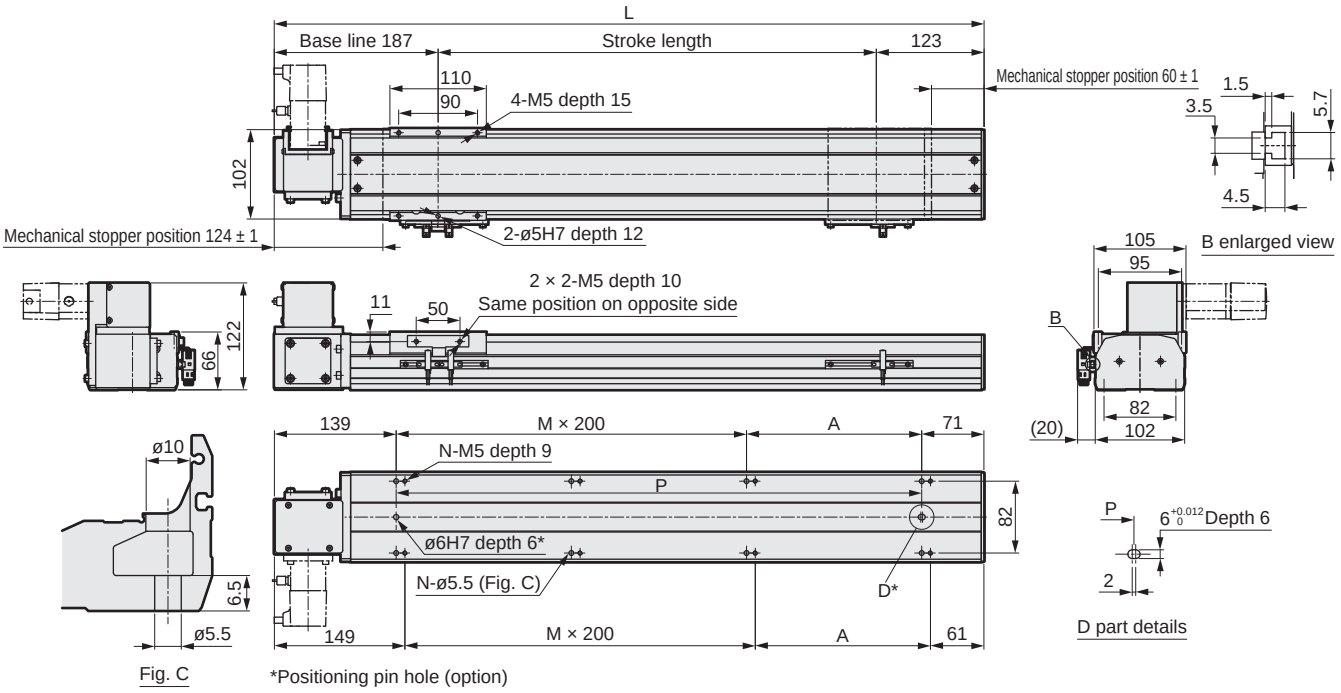

Stroke length (mm)	100	150	200	250	300	350	400	450	500	550	600	650	700	750	800	850	900	950	1000	1050	1100	1150	1200	1250	1300
L	410	460	510	560	610	660	710	760	810	860	910	960	1010	1060	1110	1160	1210	1260	1310	1360	1410	1460	1510	1560	1610
A	200	50	100	150	200	50	100	150	200	50	100	150	200	50	100	150	200	50	100	150	200	50	100	150	200
M	0	1	1	1	1	2	2	2	2	3	3	3	3	4	4	4	4	5	5	5	5	6	6	6	6
N	4	6	6	6	6	8	8	8	8	10	10	10	10	12	12	12	12	14	14	14	14	16	16	16	16
P	200	250	300	350	400	450	500	550	600	650	700	750	800	850	900	950	1000	1050	1100	1150	1200	1250	1300	1350	1400
Weight (kg)	6.8	7.2	7.7	8.1	8.5	8.9	9.3	9.8	10.2	10.6	11.0	11.5	11.9	12.3	12.7	13.2	13.6	14.0	14.4	14.8	15.3	15.7	16.1	16.5	16.9

Stroke length (mm)	1350	1400	1450	1500	1550	1600	1650	1700	1750	1800	1850	1900	1950	2000	2050	2100	2150	2200	2250	2300	2350	2400	2450	2500	2550
L	1660	1710	1760	1810	1860	1910	1960	2010	2060	2110	2160	2210	2260	2310	2360	2410	2460	2510	2560	2610	2660	2710	2760	2810	2860
A	50	100	150	200	50	100	150	200	50	100	150	200	50	100	150	200	50	100	150	200	50	100	150	200	50
M	7	7	7	7	8	8	8	8	9	9	9	9	10	10	10	10	11	11	11	11	12	12	12	12	13
N	18	18	18	18	20	20	20	20	22	22	22	22	24	24	24	24	26	26	26	26	28	28	28	28	30
P	1450	1500	1550	1600	1650	1700	1750	1800	1850	1900	1950	2000	2050	2100	2150	2200	2250	2300	2350	2400	2450	2500	2550	2600	2650
Weight (kg)	17.4	17.8	18.2	18.6	19.0	19.5	19.9	20.3	20.7	21.1	21.6	22.0	22.4	22.8	23.2	23.7	24.1	24.5	24.9	25.3	25.8	26.2	26.6	27.0	27.4

Motor mounting part

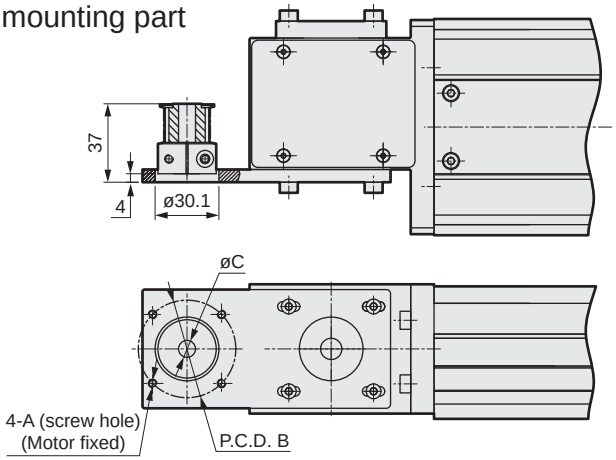

Mounted motor specification		A	B	C	Motor mounting bolt
M	100 W	M4	ø46	ø8	4-M4 × L12
Y	100 W	M4	ø46	ø8	4-M4 × L12
P	100 W	M3	ø45	ø8	4-M3 × L12
F	100 W	M4	ø46	ø8	4-M4 × L12

List of attachments

[Motor mounting parts]

Mounted motor specification	Timing belt, pulley	Motor capacity	Motor mounting bolt	
			Size	Quantity
M	Included at shipment	100 W	M4	2
Y			M4	2
P			M3	4
F			M4	2

[Origin sensor/Limit sensor]

Manufacturer	Model	Quantity
OMRON Corporation	EE-SX672	3

*Refer to page 392 for sensor specifications.

Dimensions Motor right bottom mounting

● ETV-10-*****-T

· Refer to page 394 for grease nipple dimensions.

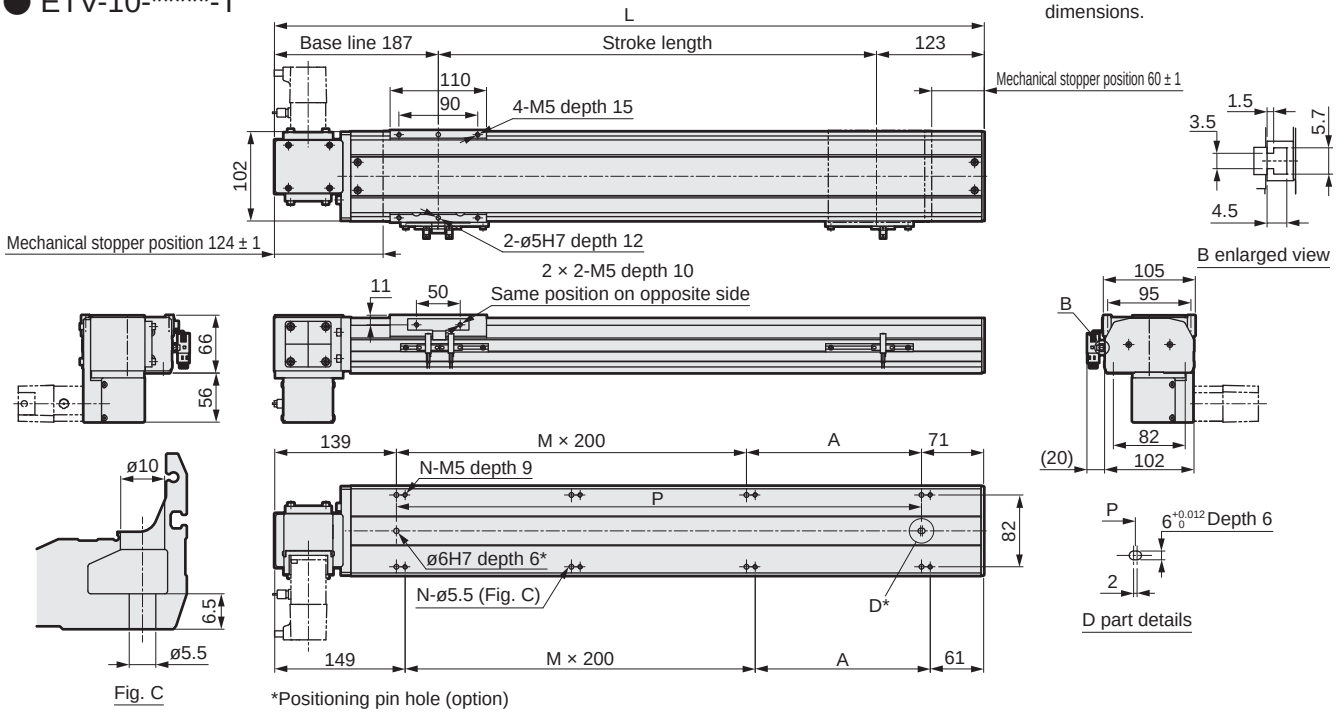

*Positioning pin hole (option)

Stroke length (mm)	100	150	200	250	300	350	400	450	500	550	600	650	700	750	800	850	900	950	1000	1050	1100	1150	1200	1250	1300
L	410	460	510	560	610	660	710	760	810	860	910	960	1010	1060	1110	1160	1210	1260	1310	1360	1410	1460	1510	1560	1610
A	200	50	100	150	200	50	100	150	200	50	100	150	200	50	100	150	200	50	100	150	200	50	100	150	200
M	0	1	1	1	1	2	2	2	2	3	3	3	3	4	4	4	4	5	5	5	5	6	6	6	6
N	4	6	6	6	6	8	8	8	8	10	10	10	10	12	12	12	12	14	14	14	14	16	16	16	16
P	200	250	300	350	400	450	500	550	600	650	700	750	800	850	900	950	1000	1050	1100	1150	1200	1250	1300	1350	1400
Weight (kg)	6.8	7.2	7.7	8.1	8.5	8.9	9.3	9.8	10.2	10.6	11.0	11.5	11.9	12.3	12.7	13.2	13.6	14.0	14.4	14.8	15.3	15.7	16.1	16.5	16.9

Stroke length (mm)	1350	1400	1450	1500	1550	1600	1650	1700	1750	1800	1850	1900	1950	2000	2050	2100	2150	2200	2250	2300	2350	2400	2450	2500	2550
L	1660	1710	1760	1810	1860	1910	1960	2010	2060	2110	2160	2210	2260	2310	2360	2410	2460	2510	2560	2610	2660	2710	2760	2810	2860
A	50	100	150	200	50	100	150	200	50	100	150	200	50	100	150	200	50	100	150	200	50	100	150	200	50
M	7	7	7	7	8	8	8	8	9	9	9	9	10	10	10	10	11	11	11	11	12	12	12	12	13
N	18	18	18	18	20	20	20	20	22	22	22	22	24	24	24	24	26	26	26	26	28	28	28	28	30
P	1450	1500	1550	1600	1650	1700	1750	1800	1850	1900	1950	2000	2050	2100	2150	2200	2250	2300	2350	2400	2450	2500	2550	2600	2650
Weight (kg)	17.4	17.8	18.2	18.6	19.0	19.5	19.9	20.3	20.7	21.1	21.6	22.0	22.4	22.8	23.2	23.7	24.1	24.5	24.9	25.3	25.8	26.2	26.6	27.0	27.4

Motor mounting part

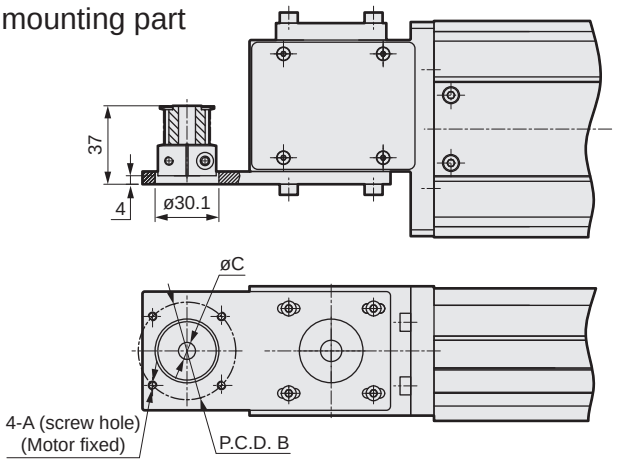

Mounted motor specification		A	B	C	Motor mounting bolt
M	100 W	M4	ø46	ø8	4-M4 × L12
Y	100 W	M4	ø46	ø8	4-M4 × L12
P	100 W	M3	ø45	ø8	4-M3 × L12
F	100 W	M4	ø46	ø8	4-M4 × L12

List of attachments

[Motor mounting parts]

Mounted motor specification	Timing belt, pulley	Motor capacity	Motor mounting bolt	
			Size	Quantity
M	Included at shipment	100 W	M4	2
Y			M4	2
P			M3	4
F			M4	2

[Origin sensor/Limit sensor]

Manufacturer	Model	Quantity
OMRON Corporation	EE-SX672	3

*Refer to page 392 for sensor specifications.

Dimensions Motor left-side mounting

● ETV-10-*****-L

· Refer to page 394 for grease nipple dimensions.

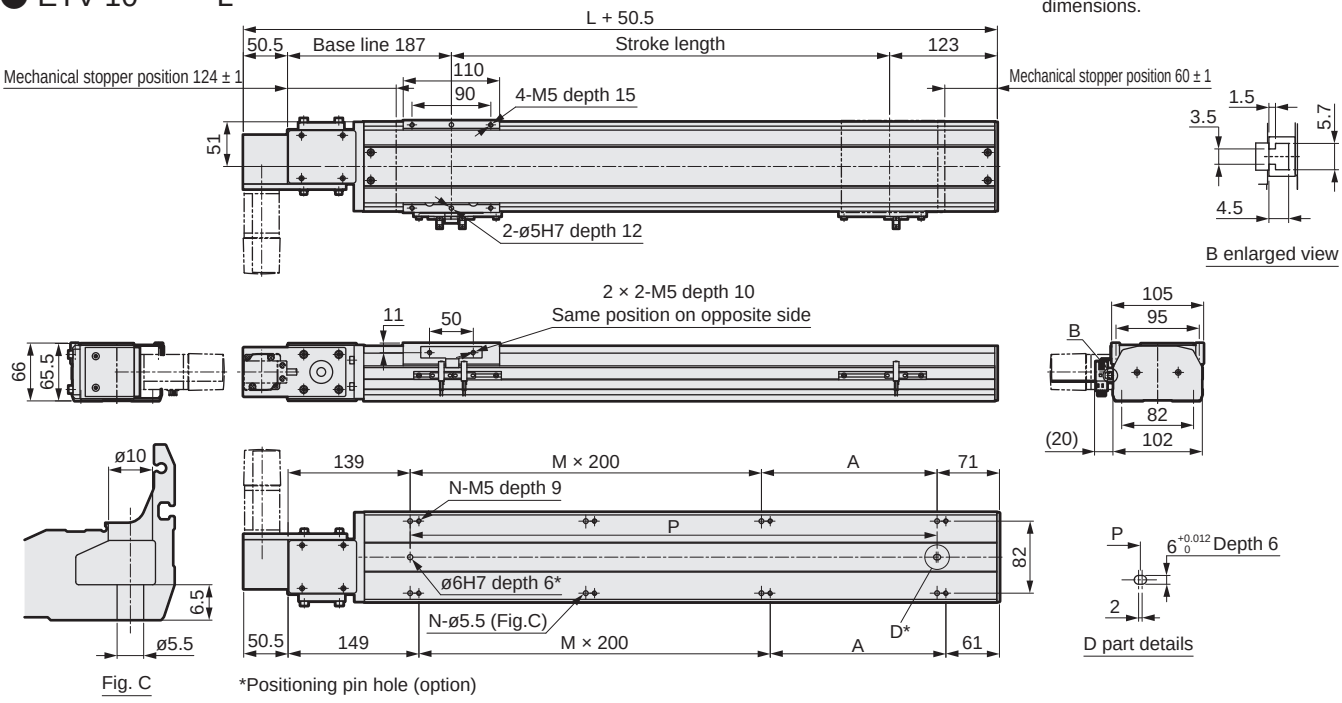

Fig. C

*Positioning pin hole (option)

Stroke length (mm)	100	150	200	250	300	350	400	450	500	550	600	650	700	750	800	850	900	950	1000	1050	1100	1150	1200	1250	1300
L	410	460	510	560	610	660	710	760	810	860	910	960	1010	1060	1110	1160	1210	1260	1310	1360	1410	1460	1510	1560	1610
A	200	50	100	150	200	50	100	150	200	50	100	150	200	50	100	150	200	50	100	150	200	50	100	150	200
M	0	1	1	1	1	2	2	2	2	3	3	3	3	4	4	4	4	5	5	5	5	6	6	6	6
N	4	6	6	6	6	8	8	8	8	10	10	10	10	12	12	12	12	14	14	14	14	16	16	16	16
P	200	250	300	350	400	450	500	550	600	650	700	750	800	850	900	950	1000	1050	1100	1150	1200	1250	1300	1350	1400
Weight (kg)	6.8	7.2	7.7	8.1	8.5	8.9	9.3	9.8	10.2	10.6	11.0	11.5	11.9	12.3	12.7	13.2	13.6	14.0	14.4	14.8	15.3	15.7	16.1	16.5	16.9

Stroke length (mm)	1350	1400	1450	1500	1550	1600	1650	1700	1750	1800	1850	1900	1950	2000	2050	2100	2150	2200	2250	2300	2350	2400	2450	2500	2550
L	1660	1710	1760	1810	1860	1910	1960	2010	2060	2110	2160	2210	2260	2310	2360	2410	2460	2510	2560	2610	2660	2710	2760	2810	2860
A	50	100	150	200	50	100	150	200	50	100	150	200	50	100	150	200	50	100	150	200	50	100	150	200	50
M	7	7	7	7	8	8	8	8	9	9	9	9	10	10	10	10	11	11	11	11	12	12	12	12	13
N	18	18	18	18	20	20	20	20	22	22	22	22	24	24	24	24	26	26	26	26	28	28	28	28	30
P	1450	1500	1550	1600	1650	1700	1750	1800	1850	1900	1950	2000	2050	2100	2150	2200	2250	2300	2350	2400	2450	2500	2550	2600	2650
Weight (kg)	17.4	17.8	18.2	18.6	19.0	19.5	19.9	20.3	20.7	21.1	21.6	22.0	22.4	22.8	23.2	23.7	24.1	24.5	24.9	25.3	25.8	26.2	26.6	27.0	27.4

Motor mounting part

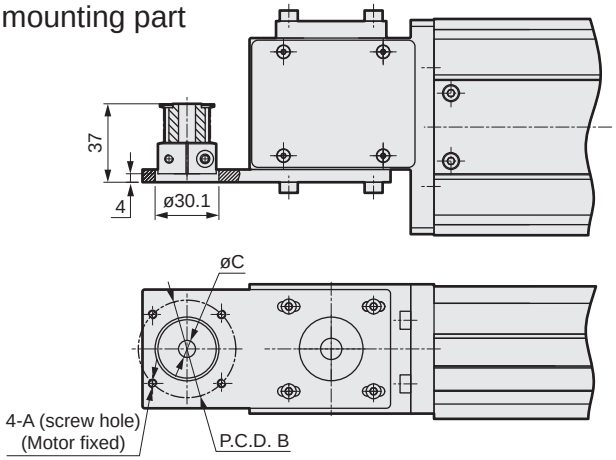

Mounted motor specification		A	B	C	Motor mounting bolt
M	100 W	M4	ø46	ø8	4-M4 × L12
Y	100 W	M4	ø46	ø8	4-M4 × L12
P	100 W	M3	ø45	ø8	4-M3 × L12
F	100 W	M4	ø46	ø8	4-M4 × L12

List of attachments

[Motor mounting parts]

Mounted motor specification	Timing belt, pulley	Motor capacity	Motor mounting bolt	
			Size	Quantity
M	Included at shipment	100 W	M4	2
Y			M4	2
P			M3	4
F			M4	2

[Origin sensor/Limit sensor]

Manufacturer	Model	Quantity
OMRON Corporation	EE-SX672	3

*Refer to page 392 for sensor specifications.

Dimensions Motor left top mounting

● ETV-10-*****-V

· Refer to page 394 for grease nipple dimensions.

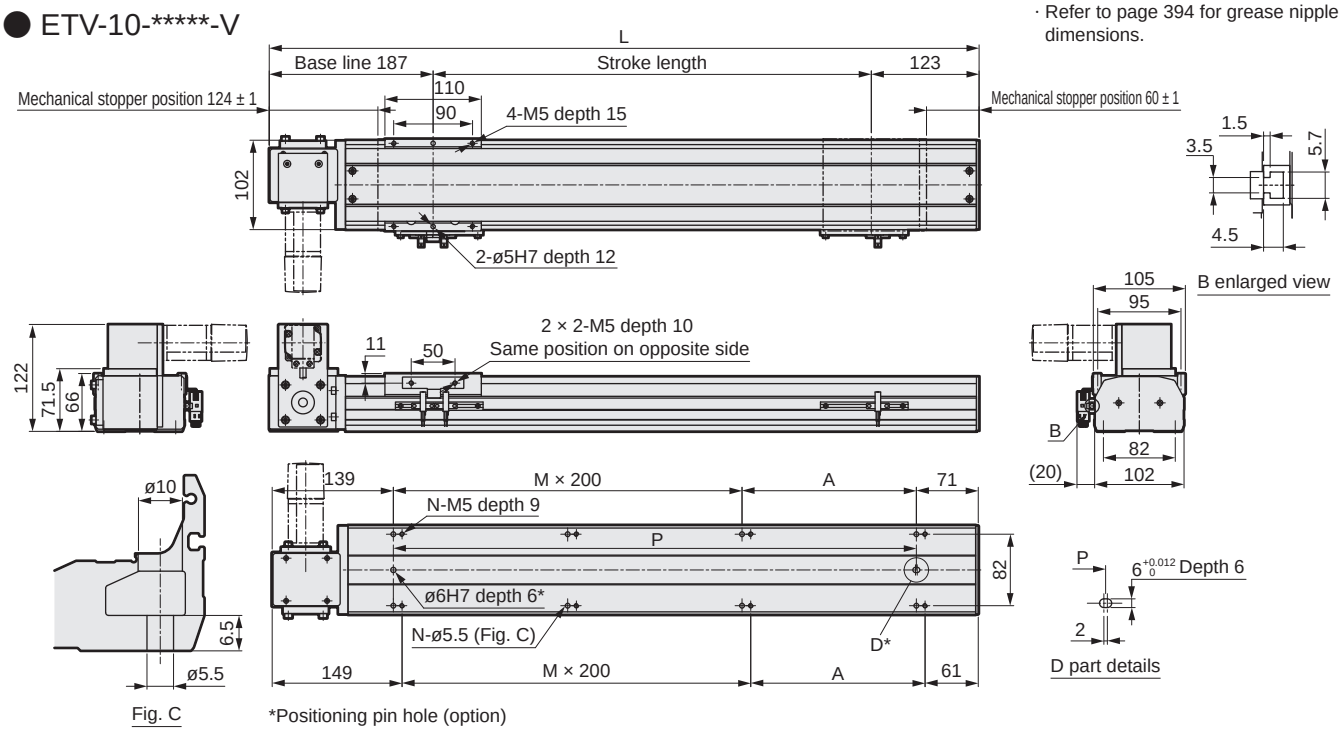

Fig. C

*Positioning pin hole (option)

Stroke length (mm)	100	150	200	250	300	350	400	450	500	550	600	650	700	750	800	850	900	950	1000	1050	1100	1150	1200	1250	1300
L	410	460	510	560	610	660	710	760	810	860	910	960	1010	1060	1110	1160	1210	1260	1310	1360	1410	1460	1510	1560	1610
A	200	50	100	150	200	50	100	150	200	50	100	150	200	50	100	150	200	50	100	150	200	50	100	150	200
M	0	1	1	1	1	2	2	2	2	3	3	3	3	4	4	4	4	5	5	5	5	6	6	6	6
N	4	6	6	6	6	8	8	8	8	10	10	10	10	12	12	12	12	14	14	14	14	16	16	16	16
P	200	250	300	350	400	450	500	550	600	650	700	750	800	850	900	950	1000	1050	1100	1150	1200	1250	1300	1350	1400
Weight (kg)	6.8	7.2	7.7	8.1	8.5	8.9	9.3	9.8	10.2	10.6	11.0	11.5	11.9	12.3	12.7	13.2	13.6	14.0	14.4	14.8	15.3	15.7	16.1	16.5	16.9

Stroke length (mm)	1350	1400	1450	1500	1550	1600	1650	1700	1750	1800	1850	1900	1950	2000	2050	2100	2150	2200	2250	2300	2350	2400	2450	2500	2550
L	1660	1710	1760	1810	1860	1910	1960	2010	2060	2110	2160	2210	2260	2310	2360	2410	2460	2510	2560	2610	2660	2710	2760	2810	2860
A	50	100	150	200	50	100	150	200	50	100	150	200	50	100	150	200	50	100	150	200	50	100	150	200	50
M	7	7	7	7	8	8	8	8	9	9	9	9	10	10	10	10	11	11	11	11	12	12	12	12	13
N	18	18	18	18	20	20	20	20	22	22	22	22	24	24	24	24	26	26	26	26	28	28	28	28	30
P	1450	1500	1550	1600	1650	1700	1750	1800	1850	1900	1950	2000	2050	2100	2150	2200	2250	2300	2350	2400	2450	2500	2550	2600	2650
Weight (kg)	17.4	17.8	18.2	18.6	19.0	19.5	19.9	20.3	20.7	21.1	21.6	22.0	22.4	22.8	23.2	23.7	24.1	24.5	24.9	25.3	25.8	26.2	26.6	27.0	27.4

Motor mounting part

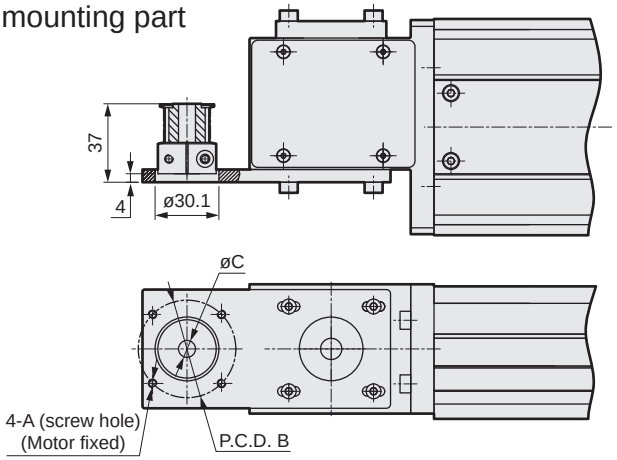

Mounted motor specification		A	B	C	Motor mounting bolt
M	100 W	M4	ø46	ø8	4-M4 × L12
Y	100 W	M4	ø46	ø8	4-M4 × L12
P	100 W	M3	ø45	ø8	4-M3 × L12
F	100 W	M4	ø46	ø8	4-M4 × L12

List of attachments

[Motor mounting parts]

Mounted motor specification	Timing belt, pulley	Motor capacity	Motor mounting bolt	
			Size	Quantity
M	Included at shipment	100 W	M4	2
Y			M4	2
P			M3	4
F			M4	2

[Origin sensor/Limit sensor]

Manufacturer	Model	Quantity
OMRON Corporation	EE-SX672	3

*Refer to page 392 for sensor specifications.

Dimensions Motor left bottom mounting

● ETV-10-*****-W

· Refer to page 394 for grease nipple dimensions.

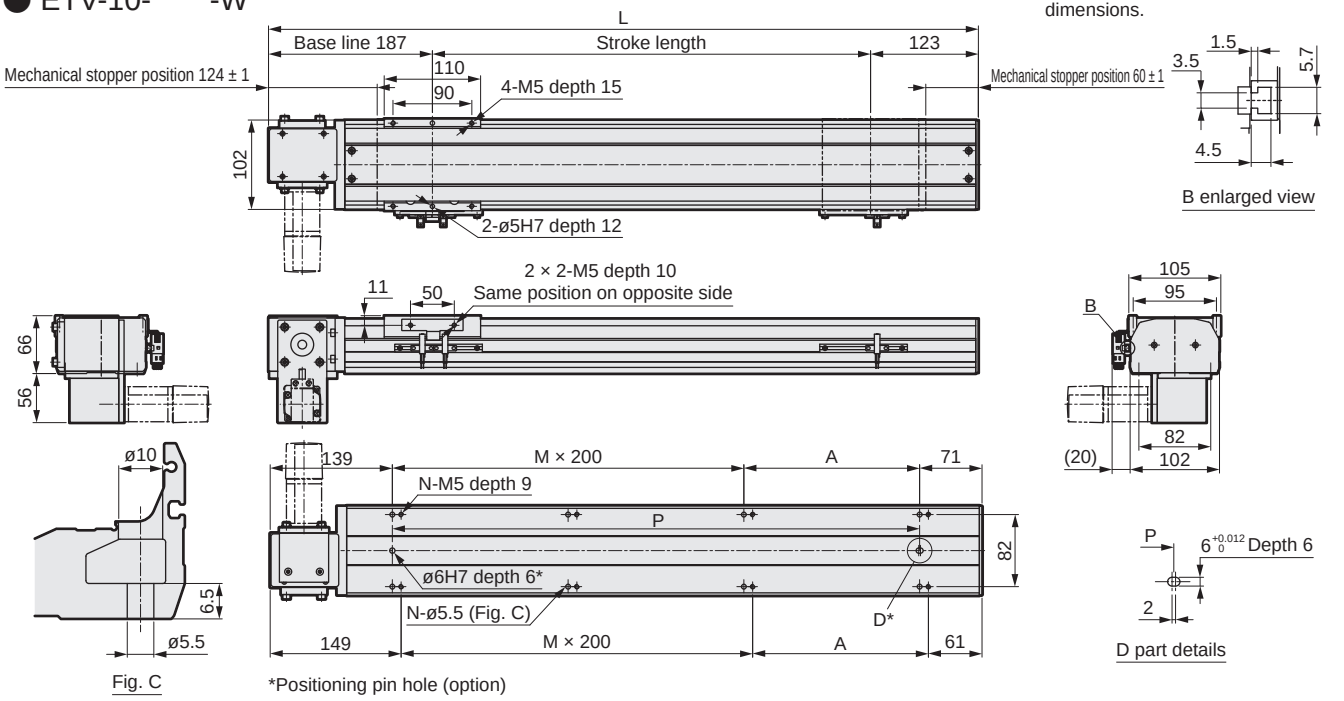

Stroke length (mm)	100	150	200	250	300	350	400	450	500	550	600	650	700	750	800	850	900	950	1000	1050	1100	1150	1200	1250	1300
L	410	460	510	560	610	660	710	760	810	860	910	960	1010	1060	1110	1160	1210	1260	1310	1360	1410	1460	1510	1560	1610
A	200	50	100	150	200	50	100	150	200	50	100	150	200	50	100	150	200	50	100	150	200	50	100	150	200
M	0	1	1	1	1	2	2	2	2	3	3	3	3	4	4	4	4	5	5	5	5	6	6	6	6
N	4	6	6	6	6	8	8	8	8	10	10	10	10	12	12	12	12	14	14	14	14	16	16	16	16
P	200	250	300	350	400	450	500	550	600	650	700	750	800	850	900	950	1000	1050	1100	1150	1200	1250	1300	1350	1400
Weight (kg)	6.8	7.2	7.7	8.1	8.5	8.9	9.3	9.8	10.2	10.6	11.0	11.5	11.9	12.3	12.7	13.2	13.6	14.0	14.4	14.8	15.3	15.7	16.1	16.5	16.9

Stroke length (mm)	1350	1400	1450	1500	1550	1600	1650	1700	1750	1800	1850	1900	1950	2000	2050	2100	2150	2200	2250	2300	2350	2400	2450	2500	2550
L	1660	1710	1760	1810	1860	1910	1960	2010	2060	2110	2160	2210	2260	2310	2360	2410	2460	2510	2560	2610	2660	2710	2760	2810	2860
A	50	100	150	200	50	100	150	200	50	100	150	200	50	100	150	200	50	100	150	200	50	100	150	200	50
M	7	7	7	7	8	8	8	8	9	9	9	9	10	10	10	10	11	11	11	11	12	12	12	12	13
N	18	18	18	18	20	20	20	20	22	22	22	22	24	24	24	24	26	26	26	26	28	28	28	28	30
P	1450	1500	1550	1600	1650	1700	1750	1800	1850	1900	1950	2000	2050	2100	2150	2200	2250	2300	2350	2400	2450	2500	2550	2600	2650
Weight (kg)	17.4	17.8	18.2	18.6	19.0	19.5	19.9	20.3	20.7	21.1	21.6	22.0	22.4	22.8	23.2	23.7	24.1	24.5	24.9	25.3	25.7	26.2	26.6	27.0	27.4

Motor mounting part

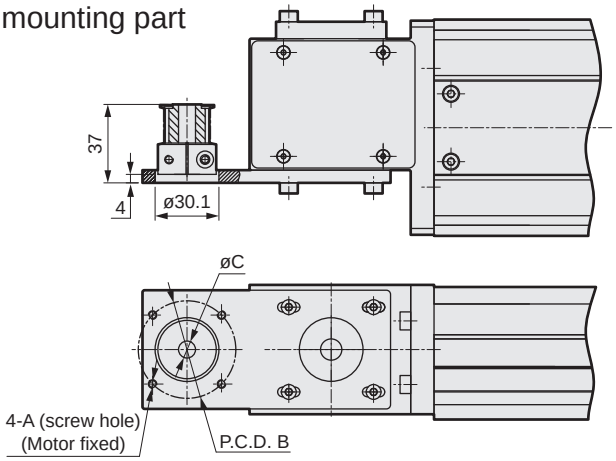

Mounted motor specification		A	B	C	Motor mounting bolt
M	100 W	M4	ø46	ø8	4-M4 × L12
Y	100 W	M4	ø46	ø8	4-M4 × L12
P	100 W	M3	ø45	ø8	4-M3 × L12
F	100 W	M4	ø46	ø8	4-M4 × L12

List of attachments

[Motor mounting parts]

Mounted motor specification	Timing belt, pulley	Motor capacity	Motor mounting bolt	
			Size	Quantity
M	Included at shipment	100 W	M4	2
Y			M4	2
P			M3	4
F			M4	2

[Origin sensor/Limit sensor]

Manufacturer	Model	Quantity
OMRON Corporation	EE-SX672	3

*Refer to page 392 for sensor specifications.

MEMO

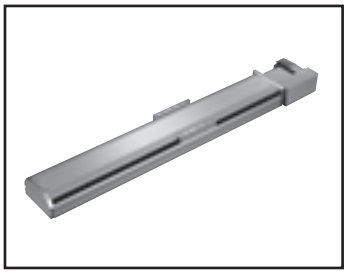

Electric actuator Belt

ETV-14 Series

Motor side mounting (left, right, bottom)

● Servo motor capacity: 200 W

How to order

ETV - 14 - 40 - 010 - R M 2 X N N N N

Ⓐ 14

Ⓑ 40

Ⓒ 010

Ⓓ R

Ⓔ M

Ⓕ 2

Ⓖ X

Ⓗ N

Ⓘ N

Ⓙ N

Ⓚ N

Ⓐ Body size

14	Body width 135 mm

Ⓑ Lead equivalent

40	40 mm

Ⓒ Stroke length

010 to 305	100 mm (In 50 mm increments) 3050 mm

Ⓓ Motor mounting direction *5

R	Right mounting
S	Right top mounting
T	Right bottom mounting
L	Left mounting
V	Left top mounting
W	Left bottom mounting

Ⓔ Mounted motor specification

M Y P F	Select the mounted motor specification from the table below.

Ⓕ Motor capacity

2	200 W

Ⓖ Driving belt

X	Standard (rubber)
L	Low dust generation (urethane)

Ⓗ Origin sensor (1 pc) *1 *2 *3

N	None
C	Outside motor side
D	Outside motor opposite side

Ⓘ Limit sensor (2 pcs) *1 *2 *3

N	None
B	Outside

Ⓙ Grease nipple *3 *4 *5

N	None (Body mounting direction: Standard)
R	Right
L	Left

Ⓚ Positioning pin hole

N	None
P	Yes

Manufacturer	200 W
Mitsubishi Electric Corporation	M
Delta Electronics Co., Ltd.	M
Sanyo Denki Co., Ltd.	M
YASKAWA Electric Corporation	Y
Keyence Corporation	Y
Panasonic Corporation	P
OMRON Corporation	P
Fuji Electric Co., Ltd.	M
FANUC CORPORATION	F
Bosch Rexroth AG	P
Rockwell Automation, Inc.	M
SIEMENS AG	M

*Refer to page 347 for the motor model No.

*1: Origin sensor and limit sensor are available as a set. As it is both-or-nothing, select "None" for both.
*2: The user can adjust the sensor position. (Included at shipment)
*3: Contact CKD to use the origin sensor, limit sensor and grease nipple in the same direction.
*4: "Body mounting direction: Standard" here indicates that either top or bottom mounting is possible.
*5: When selecting motor mounting direction R, S, or T, grease nipple R cannot be selected.
When selecting L, V, or W, grease nipple L cannot be selected.

Specifications

Applicable motor capacity		200 W servo motor
Drive method		Belt width 22 mm
Stroke length	mm	100 to 3050
Lead equivalent	mm	40
Max. load capacity *1	Horizontal kg	25
	Vertical kg	-
Max. speed	mm/s	2000
Rated thrust *1	N	100
Repeatability	mm	±0.04
Lost motion		0.1 mm or less
Dynamic allowable load	N	6566.9
Static allowable moment	N·m	MP: 552, MY: 551, MR: 485
Dynamic allowable moment	N·m	MP: 262.7, MY: 262.7, MR: 261.0
Operating ambient temperature, humidity		0 to 40°C (no freezing) 35 to 80% RH (no condensation)
Storage ambient temperature, humidity		-10 to 50°C (no freezing) 35 to 80% RH (no condensation)
Atmosphere		No corrosive gas, explosive gas, or dust

*1 Rated thrust and max. load capacity are guideline values assuming that the motor mounted will output the rated torque.

Stroke and max. speed

(mm/s)

Lead equivalent \ Stroke length	100 to 3050
40	2000

*The max. speed is the speed when the motor mounted by the customer can output a rotation speed of 3000 rpm.

Allowable overhang length

*Refer to page 390 for details.

Moment direction

MP

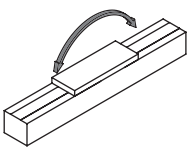

MY

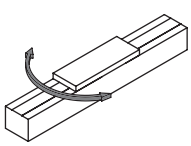

MR

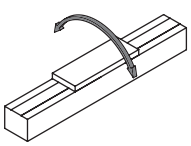

Dimensions Motor right-side mounting

● ETV-14-*****-R

· Refer to page 394 for grease nipple dimensions.

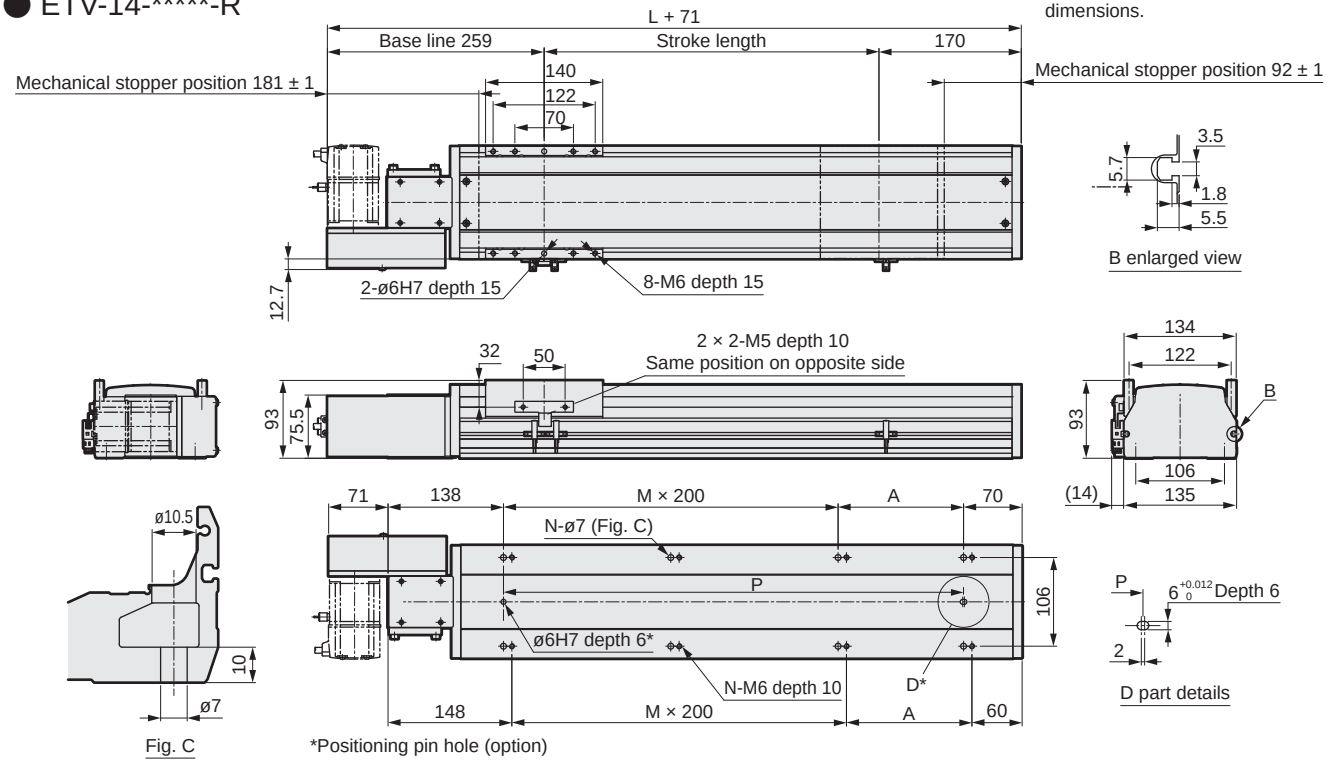

Stroke length (mm)	100	150	200	250	300	350	400	450	500	550	600	650	700	750	800	850	900	950	1000	1050	1100	1150	1200	1250	1300	1350	1400	1450	1500	1550
L	458	508	558	608	658	708	758	808	858	908	958	1008	1058	1108	1158	1208	1258	1308	1358	1408	1458	1508	1558	1608	1658	1708	1758	1808	1858	1908
A	50	100	150	200	50	100	150	200	50	100	150	200	50	100	150	200	50	100	150	200	50	100	150	200	50	100	150	200	50	100
M	1	1	1	1	2	2	2	2	3	3	3	3	4	4	4	4	5	5	5	5	6	6	6	6	7	7	7	7	8	8
N	6	6	6	6	8	8	8	8	10	10	10	10	12	12	12	12	14	14	14	14	16	16	16	16	18	18	18	18	20	20
P	250	300	350	400	450	500	550	600	650	700	750	800	850	900	950	1000	1050	1100	1150	1200	1250	1300	1350	1400	1450	1500	1550	1600	1650	1700
Weight (kg)	8.6	9.0	9.5	10.0	10.5	11.0	11.4	12.0	12.4	13.0	13.4	13.9	14.4	14.9	15.4	15.9	16.4	16.9	17.3	17.9	18.5	19.1	19.7	20.3	20.9	21.5	22.1	22.7	23.3	23.9

Stroke length (mm)	1600	1650	1700	1750	1800	1850	1900	1950	2000	2050	2100	2150	2200	2250	2300	2350	2400	2450	2500	2550	2600	2650	2700	2750	2800	2850	2900	2950	3000	3050
L	1958	2008	2058	2108	2158	2208	2258	2308	2358	2408	2458	2508	2558	2608	2658	2708	2758	2808	2858	2908	2958	3008	3058	3108	3158	3208	3258	3308	3358	3408
A	150	200	50	100	150	200	50	100	150	200	50	100	150	200	50	100	150	200	50	100	150	200	50	100	150	200	50	100	150	200
M	8	8	9	9	9	9	10	10	10	10	11	11	11	11	12	12	12	12	13	13	13	13	14	14	14	14	15	15	15	15
N	20	20	22	22	22	22	24	24	24	24	26	26	26	26	28	28	28	28	30	30	30	30	32	32	32	32	34	34	34	34
P	1750	1800	1850	1900	1950	2000	2050	2100	2150	2200	2250	2300	2350	2400	2450	2500	2550	2600	2650	2700	2750	2800	2850	2900	2950	3000	3050	3100	3150	3200
Weight (kg)	24.5	25.1	25.7	26.3	26.9	27.5	28.1	28.7	29.3	29.9	30.5	31.1	31.7	32.3	32.9	33.5	34.1	34.7	35.3	35.9	36.5	37.1	37.7	38.3	38.9	39.5	40.1	40.7	41.3	41.9

Motor mounting part

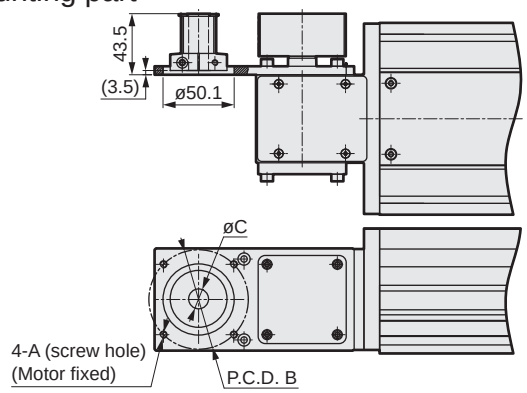

Mounted motor specification		A	B	C	Motor mounting bolt
M	200 W	M5	ø70	ø14	4-M5 × L12
Y	200 W	M5	ø70	ø14	4-M5 × L12
P	200 W	M4	ø70	ø11	4-M4 × L12
F	200 W	M5	ø70	ø9	4-M5 × L12

List of attachments

[Motor mounting parts]

Mounted motor specification	Timing belt, pulley	Motor capacity	Motor mounting bolt	
			Size	Quantity
M	Included at shipment	200 W	M5	4
Y			M5	4
P			M4	4
F			M5	4

[Origin sensor/Limit sensor]

Manufacturer	Model	Quantity
OMRON Corporation	EE-SX672	3

*Refer to page 392 for sensor specifications.

Dimensions Motor right top mounting

● ETV-14-*****-S

· Refer to page 394 for grease nipple dimensions.

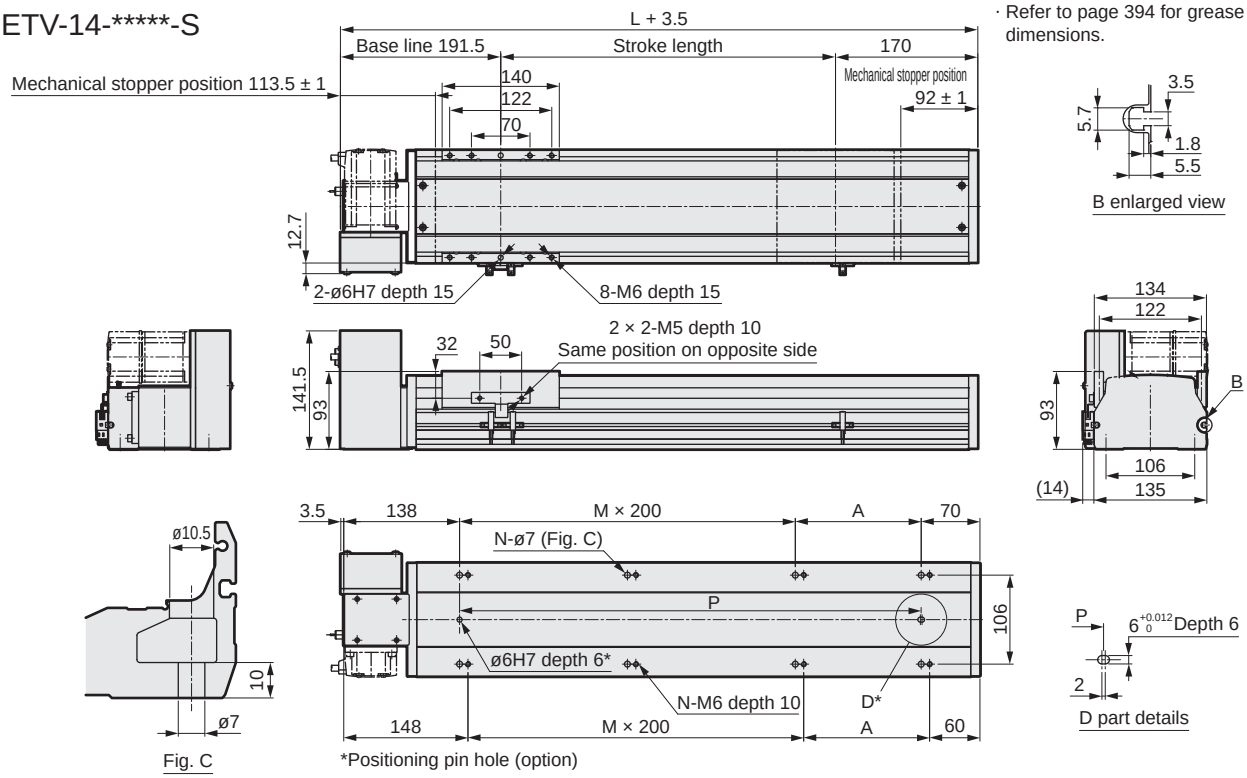

Stroke length (mm)	100	150	200	250	300	350	400	450	500	550	600	650	700	750	800	850	900	950	1000	1050	1100	1150	1200	1250	1300	1350	1400	1450	1500	1550
L	458	508	558	608	658	708	758	808	858	908	958	1008	1058	1108	1158	1208	1258	1308	1358	1408	1458	1508	1558	1608	1658	1708	1758	1808	1858	1908
A	50	100	150	200	50	100	150	200	50	100	150	200	50	100	150	200	50	100	150	200	50	100	150	200	50	100	150	200	50	100
M	1	1	1	1	2	2	2	2	3	3	3	3	4	4	4	4	5	5	5	5	6	6	6	6	7	7	7	7	8	8
N	6	6	6	6	8	8	8	8	10	10	10	10	12	12	12	12	14	14	14	14	16	16	16	16	18	18	18	18	20	20
P	250	300	350	400	450	500	550	600	650	700	750	800	850	900	950	1000	1050	1100	1150	1200	1250	1300	1350	1400	1450	1500	1550	1600	1650	1700
Weight (kg)	8.6	9.0	9.5	10.0	10.5	11.0	11.4	12.0	12.4	13.0	13.4	13.9	14.4	14.9	15.4	15.9	16.4	16.9	17.3	17.9	18.5	19.1	19.7	20.3	20.9	21.5	22.1	22.7	23.3	23.9

Stroke length (mm)	1600	1650	1700	1750	1800	1850	1900	1950	2000	2050	2100	2150	2200	2250	2300	2350	2400	2450	2500	2550	2600	2650	2700	2750	2800	2850	2900	2950	3000	3050
L	1958	2008	2058	2108	2158	2208	2258	2308	2358	2408	2458	2508	2558	2608	2658	2708	2758	2808	2858	2908	2958	3008	3058	3108	3158	3208	3258	3308	3358	3408
A	150	200	50	100	150	200	50	100	150	200	50	100	150	200	50	100	150	200	50	100	150	200	50	100	150	200	50	100	150	200
M	8	8	9	9	9	9	10	10	10	10	11	11	11	11	12	12	12	12	13	13	13	13	14	14	14	14	15	15	15	15
N	20	20	22	22	22	22	24	24	24	24	26	26	26	26	28	28	28	28	30	30	30	30	32	32	32	32	34	34	34	34
P	1750	1800	1850	1900	1950	2000	2050	2100	2150	2200	2250	2300	2350	2400	2450	2500	2550	2600	2650	2700	2750	2800	2850	2900	2950	3000	3050	3100	3150	3200
Weight (kg)	24.5	25.1	25.7	26.3	26.9	27.5	28.1	28.7	29.3	29.9	30.5	31.1	31.7	32.3	32.9	33.5	34.1	34.7	35.3	35.9	36.5	37.1	37.7	38.3	38.9	39.5	40.1	40.7	41.3	41.9

Motor mounting part

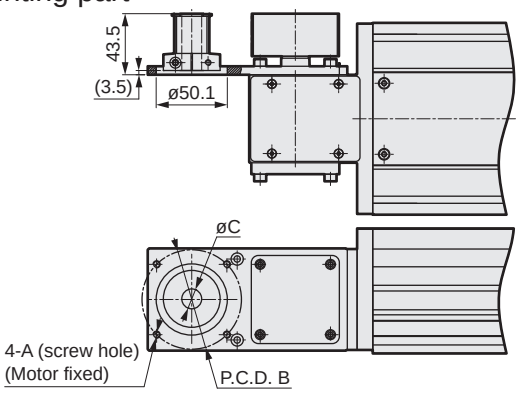

Mounted motor specification		A	B	C	Motor mounting bolt
M	200 W	M5	ø70	ø14	4-M5 × L12
Y	200 W	M5	ø70	ø14	4-M5 × L12
P	200 W	M4	ø70	ø11	4-M4 × L12
F	200 W	M5	ø70	ø9	4-M5 × L12

List of attachments

[Motor mounting parts]

Mounted motor specification	Timing belt, pulley	Motor capacity	Motor mounting bolt	
			Size	Quantity
M	Included at shipment	200 W	M5	4
Y			M5	4
P			M4	4
F			M5	4

[Origin sensor/Limit sensor]

Manufacturer	Model	Quantity
OMRON Corporation	EE-SX672	3

*Refer to page 392 for sensor specifications.

Dimensions Motor right bottom mounting

● ETV-14-*****-T

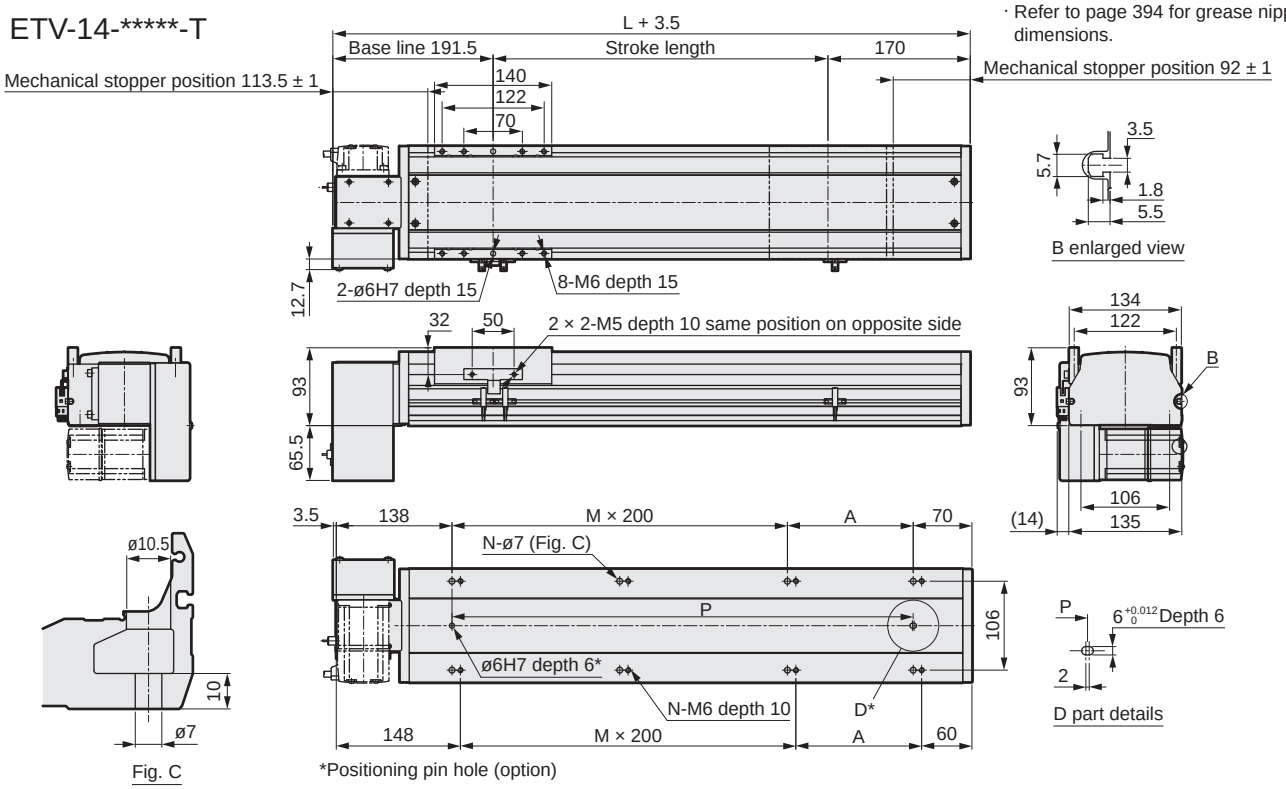

· Refer to page 394 for grease nipple dimensions.

Fig. C

*Positioning pin hole (option)

Stroke length (mm)	100	150	200	250	300	350	400	450	500	550	600	650	700	750	800	850	900	950	1000	1050	1100	1150	1200	1250	1300	1350	1400	1450	1500	1550
L	458	508	558	608	658	708	758	808	858	908	958	1008	1058	1108	1158	1208	1258	1308	1358	1408	1458	1508	1558	1608	1658	1708	1758	1808	1858	1908
A	50	100	150	200	50	100	150	200	50	100	150	200	50	100	150	200	50	100	150	200	50	100	150	200	50	100	150	200	50	100
M	1	1	1	1	2	2	2	2	3	3	3	3	4	4	4	4	5	5	5	5	6	6	6	6	7	7	7	7	8	8
N	6	6	6	6	8	8	8	8	10	10	10	10	12	12	12	12	14	14	14	14	16	16	16	16	18	18	18	18	20	20
P	250	300	350	400	450	500	550	600	650	700	750	800	850	900	950	1000	1050	1100	1150	1200	1250	1300	1350	1400	1450	1500	1550	1600	1650	1700
Weight (kg)	8.6	9.0	9.5	10.0	10.5	11.0	11.4	12.0	12.4	13.0	13.4	13.9	14.4	14.9	15.4	15.9	16.4	16.9	17.3	17.9	18.5	19.1	19.7	20.3	20.9	21.5	22.1	22.7	23.3	23.9

Stroke length (mm)	1600	1650	1700	1750	1800	1850	1900	1950	2000	2050	2100	2150	2200	2250	2300	2350	2400	2450	2500	2550	2600	2650	2700	2750	2800	2850	2900	2950	3000	3050
L	1958	2008	2058	2108	2158	2208	2258	2308	2358	2408	2458	2508	2558	2608	2658	2708	2758	2808	2858	2908	2958	3008	3058	3108	3158	3208	3258	3308	3358	3408
A	150	200	50	100	150	200	50	100	150	200	50	100	150	200	50	100	150	200	50	100	150	200	50	100	150	200	50	100	150	200
M	8	8	9	9	9	9	10	10	10	10	11	11	11	11	12	12	12	12	13	13	13	13	14	14	14	14	15	15	15	15
N	20	20	22	22	22	22	24	24	24	24	26	26	26	26	28	28	28	28	30	30	30	30	32	32	32	32	34	34	34	34
P	1750	1800	1850	1900	1950	2000	2050	2100	2150	2200	2250	2300	2350	2400	2450	2500	2550	2600	2650	2700	2750	2800	2850	2900	2950	3000	3050	3100	3150	3200
Weight (kg)	24.5	25.1	25.7	26.3	26.9	27.5	28.1	28.7	29.3	29.9	30.5	31.1	31.7	32.3	32.9	33.5	34.1	34.7	35.3	35.9	36.5	37.1	37.7	38.3	38.9	39.5	40.1	40.7	41.3	41.9

Motor mounting part

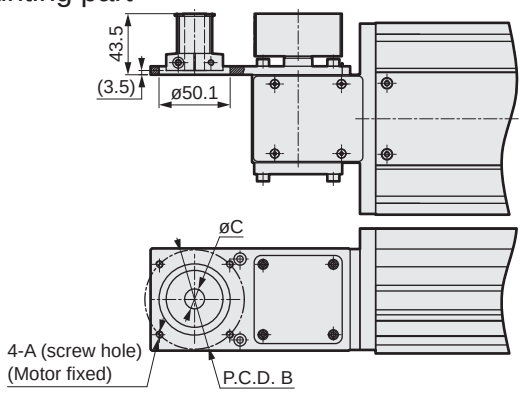

Mounted motor specification		A	B	C	Motor mounting bolt
M	200 W	M5	ø70	ø14	4-M5 × L12
Y	200 W	M5	ø70	ø14	4-M5 × L12
P	200 W	M4	ø70	ø11	4-M4 × L12
F	200 W	M5	ø70	ø9	4-M5 × L12

List of attachments

[Motor mounting parts]

Mounted motor specification	Timing belt, pulley	Motor capacity	Motor mounting bolt	
			Size	Quantity
M	Included at shipment	200 W	M5	4
Y			M5	4
P			M4	4
F			M5	4

[Origin sensor/Limit sensor]

Manufacturer	Model	Quantity
OMRON Corporation	EE-SX672	3

*Refer to page 392 for sensor specifications.

Dimensions Motor left-side mounting

● ETV-14-*****-L

· Refer to page 394 for grease nipple dimensions.

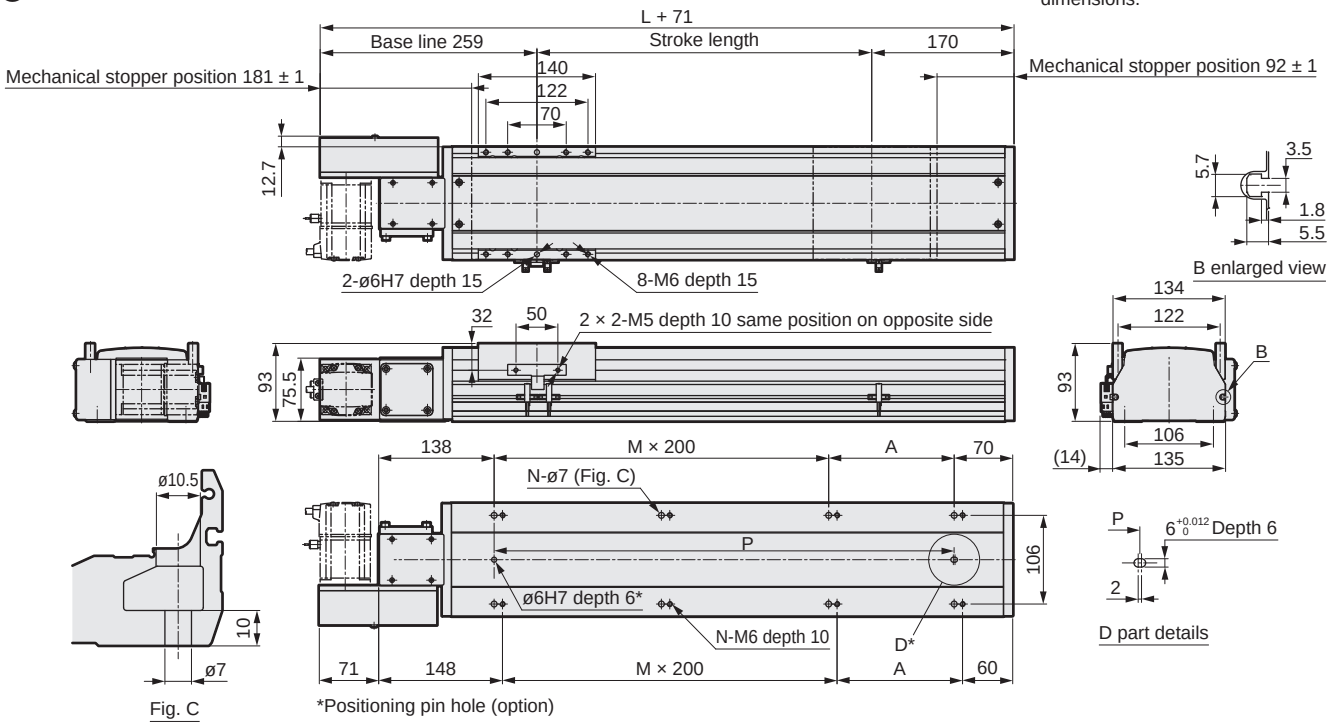

Stroke length (mm)	100	150	200	250	300	350	400	450	500	550	600	650	700	750	800	850	900	950	1000	1050	1100	1150	1200	1250	1300	1350	1400	1450	1500	1550
L	458	508	558	608	658	708	758	808	858	908	958	1008	1058	1108	1158	1208	1258	1308	1358	1408	1458	1508	1558	1608	1658	1708	1758	1808	1858	1908
A	50	100	150	200	50	100	150	200	50	100	150	200	50	100	150	200	50	100	150	200	50	100	50	200	50	100	150	200	50	100
M	1	1	1	1	2	2	2	2	3	3	3	3	4	4	4	4	5	5	5	5	6	6	6	6	7	7	7	7	8	8
N	6	6	6	6	8	8	8	8	10	10	10	10	12	12	12	12	14	14	14	14	16	16	16	16	18	18	18	18	20	20
P	250	300	350	400	450	500	550	600	650	700	750	800	850	900	950	1000	1050	1100	1150	1200	1250	1300	1350	1400	1450	1500	1550	1600	1650	1700
Weight (kg)	8.6	9.0	9.5	10.0	10.5	11.0	11.4	12.0	12.4	13.0	13.4	13.9	14.4	14.9	15.4	15.9	16.4	16.9	17.3	17.9	18.5	19.1	19.7	20.3	20.9	21.5	22.1	22.7	23.3	23.9

Stroke length (mm)	1600	1650	1700	1750	1800	1850	1900	1950	2000	2050	2100	2150	2200	2250	2300	2350	2400	2450	2500	2550	2600	2650	2700	2750	2800	2850	2900	2950	3000	3050
L	1958	2008	2058	2108	2158	2208	2258	2308	2358	2408	2458	2508	2558	2608	2658	2708	2758	2808	2858	2908	2958	3008	3058	3108	3158	3208	3258	3308	3358	3408
A	150	200	50	100	150	200	50	100	150	200	50	100	150	200	50	100	150	200	50	100	150	200	50	100	150	200	50	100	150	200
M	8	8	9	9	9	9	10	10	10	10	11	11	11	11	12	12	12	12	13	13	13	13	14	14	14	14	15	15	15	15
N	20	20	22	22	22	22	24	24	24	24	26	26	26	26	28	28	28	28	30	30	30	30	32	32	32	32	34	34	34	34
P	1750	1800	1850	1900	1950	2000	2050	2100	2150	2200	2250	2300	2350	2400	2450	2500	2550	2600	2650	2700	2750	2800	2850	2900	2950	3000	3050	3100	3150	3200
Weight (kg)	24.5	25.1	25.7	26.3	26.9	27.5	28.1	28.7	29.3	29.9	30.5	31.1	31.7	32.3	32.9	33.5	34.1	34.7	35.3	35.9	36.5	37.1	37.7	38.3	38.9	39.5	40.1	40.7	41.3	41.9

Motor mounting part

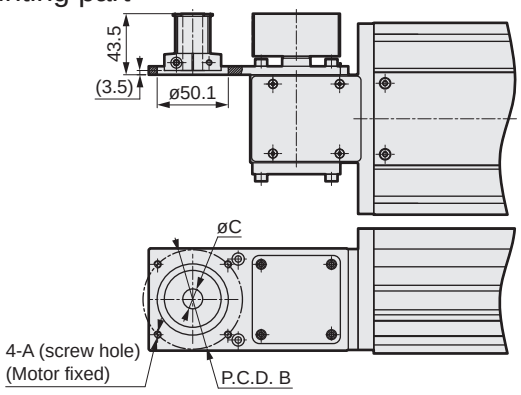

Mounted motor specification		A	B	C	Motor mounting bolt
M	200 W	M5	ø70	ø14	4-M5 × L12
Y	200 W	M5	ø70	ø14	4-M5 × L12
P	200 W	M4	ø70	ø11	4-M4 × L12
F	200 W	M5	ø70	ø9	4-M5 × L12

List of attachments

[Motor mounting parts]

Mounted motor specification	Timing belt, pulley	Motor capacity	Motor mounting bolt	
			Size	Quantity
M	Included at shipment	200 W	M5	4
Y			M5	4
P			M4	4
F			M5	4

[Origin sensor/Limit sensor]

Manufacturer	Model	Quantity
OMRON Corporation	EE-SX672	3

*Refer to page 392 for sensor specifications.

Dimensions Motor left top mounting

● ETV-14-*****-V

· Refer to page 394 for grease nipple dimensions.

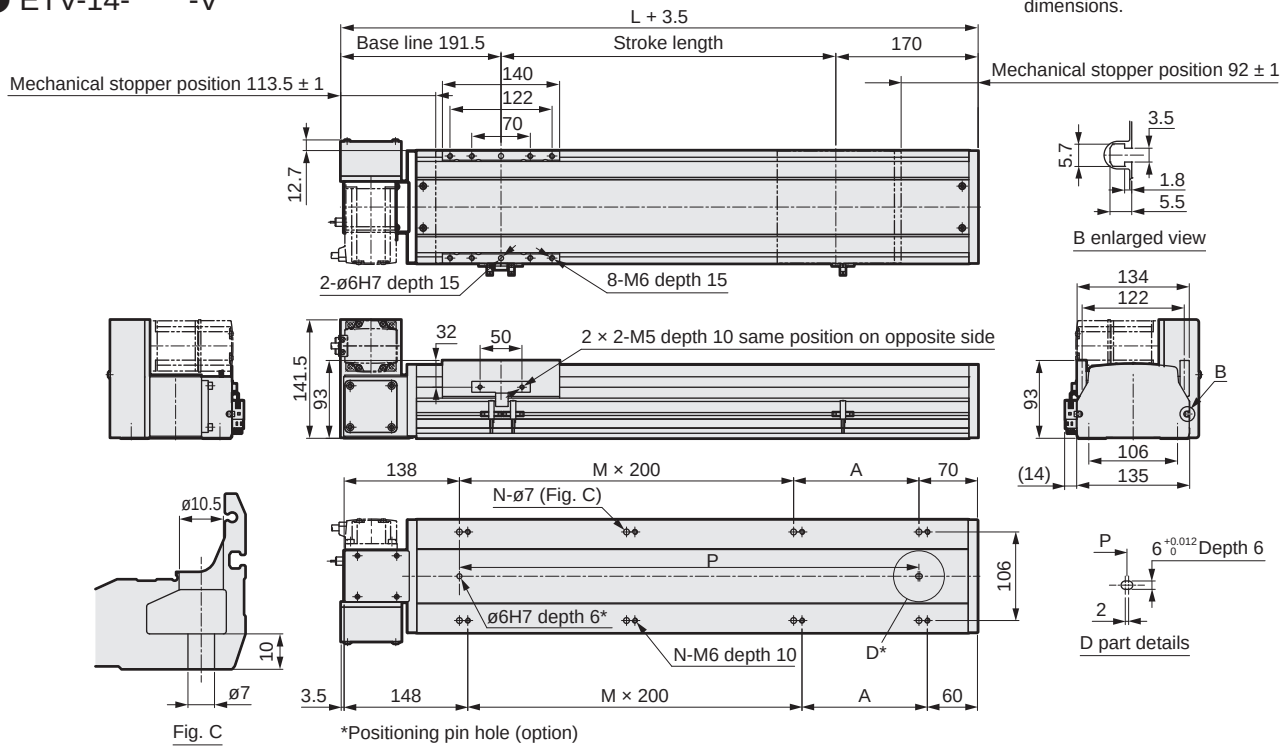

Fig. C

*Positioning pin hole (option)

Stroke length (mm)	100	150	200	250	300	350	400	450	500	550	600	650	700	750	800	850	900	950	1000	1050	1100	1150	1200	1250	1300	1350	1400	1450	1500	1550
L	458	508	558	608	658	708	758	808	858	908	958	1008	1058	1108	1158	1208	1258	1308	1358	1408	1458	1508	1558	1608	1658	1708	1758	1808	1858	1908
A	50	100	150	200	50	100	150	200	50	100	150	200	50	100	150	200	50	100	150	200	50	100	150	200	50	100	150	200	50	100
M	1	1	1	1	2	2	2	2	3	3	3	3	4	4	4	4	5	5	5	5	6	6	6	6	7	7	7	7	8	8
N	6	6	6	6	8	8	8	8	10	10	10	10	12	12	12	12	14	14	14	14	16	16	16	16	18	18	18	18	20	20
P	250	300	350	400	450	500	550	600	650	700	750	800	850	900	950	1000	1050	1100	1150	1200	1250	1300	1350	1400	1450	1500	1550	1600	1650	1700
Weight (kg)	8.6	9.0	9.5	10.0	10.5	11.0	11.4	12.0	12.4	13.0	13.4	13.9	14.4	14.9	15.4	15.9	16.4	16.9	17.3	17.9	18.5	19.1	19.7	20.3	20.9	21.5	22.1	22.7	23.3	23.9

Stroke length (mm)	1600	1650	1700	1750	1800	1850	1900	1950	2000	2050	2100	2150	2200	2250	2300	2350	2400	2450	2500	2550	2600	2650	2700	2750	2800	2850	2900	2950	3000	3050
L	1958	2008	2058	2108	2158	2208	2258	2308	2358	2408	2458	2508	2558	2608	2658	2708	2758	2808	2858	2908	2958	3008	3058	3108	3158	3208	3258	3308	3358	3408
A	150	200	50	100	150	200	50	100	150	200	50	100	150	200	50	100	150	200	50	100	150	200	50	100	150	200	50	100	150	200
M	8	8	9	9	9	9	10	10	10	10	11	11	11	11	12	12	12	12	13	13	13	13	14	14	14	14	15	15	15	15
N	20	20	22	22	22	22	24	24	24	24	26	26	26	26	28	28	28	28	30	30	30	30	32	32	32	32	34	34	34	34
P	1750	1800	1850	1900	1950	2000	2050	2100	2150	2200	2250	2300	2350	2400	2450	2500	2550	2600	2650	2700	2750	2800	2850	2900	2950	3000	3050	3100	3150	3200
Weight (kg)	24.5	25.1	25.7	26.3	26.9	27.5	28.1	28.7	29.3	29.9	30.5	31.1	31.7	32.3	32.9	33.5	34.1	34.7	35.3	35.9	36.5	37.1	37.7	38.3	38.9	39.5	40.1	40.7	41.3	41.9

Motor mounting part

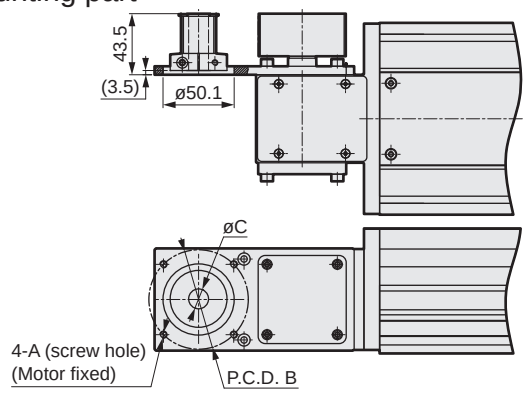

Mounted motor specification		A	B	C	Motor mounting bolt
M	200 W	M5	ø70	ø14	4-M5 × L12
Y	200 W	M5	ø70	ø14	4-M5 × L12
P	200 W	M4	ø70	ø11	4-M4 × L12
F	200 W	M5	ø70	ø9	4-M5 × L12

List of attachments

[Motor mounting parts]

Mounted motor specification	Timing belt, pulley	Motor capacity	Motor mounting bolt	
			Size	Quantity
M	Included at shipment	200 W	M5	4
Y			M5	4
P			M4	4
F			M5	4

[Origin sensor/Limit sensor]

Manufacturer	Model	Quantity
OMRON Corporation	EE-SX672	3

*Refer to page 392 for sensor specifications.

Dimensions Motor left bottom mounting

● ETV-14-*****-W

· Refer to page 394 for grease nipple dimensions.

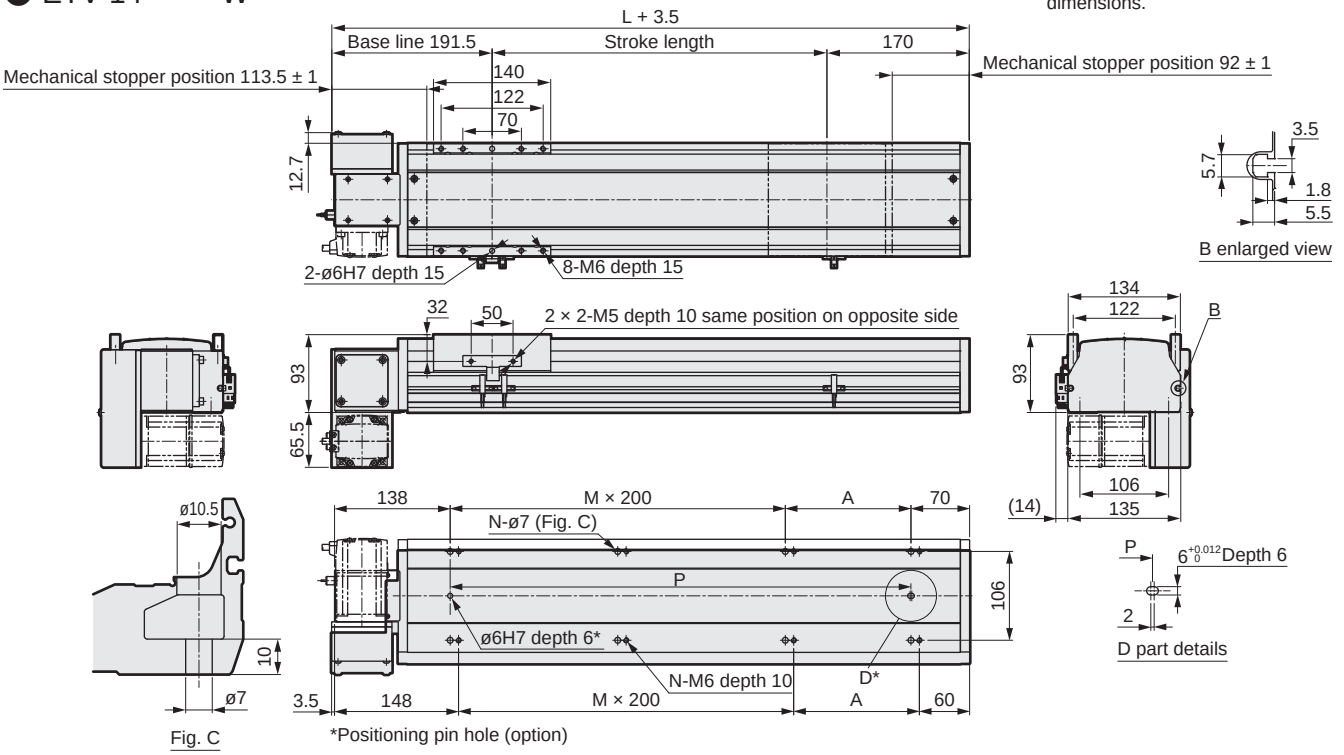

Fig. C

*Positioning pin hole (option)

Stroke length (mm)	100	150	200	250	300	350	400	450	500	550	600	650	700	750	800	850	900	950	1000	1050	1100	1150	1200	1250	1300	1350	1400	1450	1500	1550
L	458	508	558	608	658	708	758	808	858	908	958	1008	1058	1108	1158	1208	1258	1308	1358	1408	1458	1508	1558	1608	1658	1708	1758	1808	1858	1908
A	50	100	150	200	50	100	150	200	50	100	150	200	50	100	150	200	50	100	150	200	50	100	150	200	50	100	150	200	50	100
M	1	1	1	1	2	2	2	2	3	3	3	3	4	4	4	4	5	5	5	5	6	6	6	6	7	7	7	7	8	8
N	6	6	6	6	8	8	8	8	10	10	10	10	12	12	12	12	14	14	14	14	16	16	16	16	18	18	18	18	20	20
P	250	300	350	400	450	500	550	600	650	700	750	800	850	900	950	1000	1050	1100	1150	1200	1250	1300	1350	1400	1450	1500	1550	1600	1650	1700
Weight (kg)	8.6	9.0	9.5	10.0	10.5	11.0	11.4	12.0	12.4	13.0	13.4	13.9	14.4	14.9	15.4	15.9	16.4	16.9	17.3	17.9	18.5	19.1	19.7	20.3	20.9	21.5	22.1	22.7	23.3	23.9

Stroke length (mm)	1600	1650	1700	1750	1800	1850	1900	1950	2000	2050	2100	2150	2200	2250	2300	2350	2400	2450	2500	2550	2600	2650	2700	2750	2800	2850	2900	2950	3000	3050
L	1958	2008	2058	2108	2158	2208	2258	2308	2358	2408	2458	2508	2558	2608	2658	2708	2758	2808	2858	2908	2958	3008	3058	3108	3158	3208	3258	3308	3358	3408
A	150	200	50	100	150	200	50	100	150	200	50	100	150	200	50	100	150	200	50	100	150	200	50	100	150	200	50	100	150	200
M	8	8	9	9	9	9	10	10	10	10	11	11	11	11	12	12	12	12	13	13	13	13	14	14	14	14	15	15	15	15
N	20	20	22	22	22	22	24	24	24	24	26	26	26	26	28	28	28	28	30	30	30	30	32	32	32	32	34	34	34	34
P	1750	1800	1850	1900	1950	2000	2050	2100	2150	2200	2250	2300	2350	2400	2450	2500	2550	2600	2650	2700	2750	2800	2850	2900	2950	3000	3050	3100	3150	3200
Weight (kg)	24.5	25.1	25.7	26.3	26.9	27.5	28.1	28.7	29.3	29.9	30.5	31.1	31.7	32.3	32.9	33.5	34.1	34.7	35.3	35.9	36.5	37.1	37.7	38.3	38.9	39.5	40.1	40.7	41.3	41.9

Motor mounting part

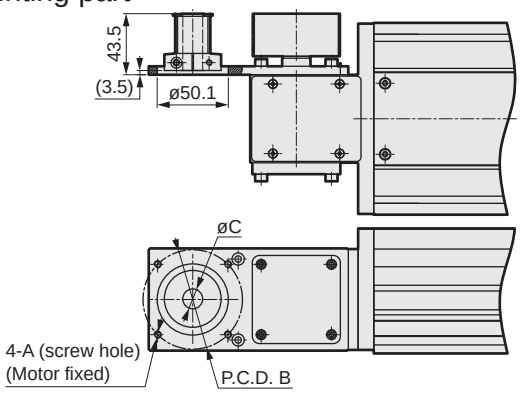

Mounted motor specification		A	B	C	Motor mounting bolt
M	200 W	M5	ø70	ø14	4-M5 × L12
Y	200 W	M5	ø70	ø14	4-M5 × L12
P	200 W	M4	ø70	ø11	4-M4 × L12
F	200 W	M5	ø70	ø9	4-M5 × L12

List of attachments

[Motor mounting parts]

Mounted motor specification	Timing belt, pulley	Motor capacity	Motor mounting bolt	
			Size	Quantity
M	Included at shipment	200 W	M5	4
Y			M5	4
P			M4	4
F			M5	4

[Origin sensor/Limit sensor]

Manufacturer	Model	Quantity
OMRON Corporation	EE-SX672	3

*Refer to page 392 for sensor specifications.

MEMO

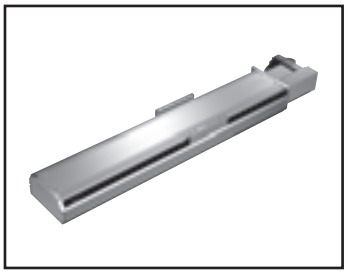

Electric actuator Belt

ETV-17 Series

Motor side mounting (left, right, bottom)

● Servo motor capacity: 400 W

How to order

ETV - 17 - 40 010 - R M 4 X N N N N

Ⓐ 17

Ⓑ 40

Ⓒ 010

Ⓓ R

Ⓔ M

Ⓕ 4

Ⓖ X

Ⓗ N

Ⓘ N

Ⓙ N

Ⓚ N

Ⓐ Body size

17	Body width 170 mm

Ⓑ Lead equivalent

40	40 mm

Ⓒ Stroke length

010 to 305	100 mm (In 50 mm increments) 3050 mm

Ⓓ Motor mounting direction *5

R	Right mounting
S	Right top mounting
T	Right bottom mounting
L	Left mounting
V	Left top mounting
W	Left bottom mounting

Ⓔ Mounted motor specification

M	Select the mounted motor specification from the table below.
Y	
P	
F	

Ⓕ Motor capacity

4	400 W

Ⓖ Driving belt

X	Standard (rubber)
L	Low dust generation (urethane)

Ⓗ Origin sensor (1 pc) *1 *2 *3

N	None
C	Outside motor side
D	Outside motor opposite side

Ⓘ Limit sensor (2 pcs) *1 *2 *3

N	None
B	Outside

Ⓙ Grease nipple *3 *4 *5

N	None (Body mounting direction: Standard)
R	Right
L	Left

Ⓚ Positioning pin hole

N	None
P	Yes

*1: Origin sensor and limit sensor are available as a set. As it is both-or-nothing, select "None" for both.
*2: The user can adjust the sensor position. (Included at shipment)
*3: Contact CKD to use the origin sensor, limit sensor and grease nipple in the same direction.
*4: "Body mounting direction: Standard" here indicates that either top or bottom mounting is possible.
*5: When selecting motor mounting direction R, S, or T, grease nipple R cannot be selected.
When selecting L, V, or W, grease nipple L cannot be selected.

Manufacturer	400 W
Mitsubishi Electric Corporation	M
Delta Electronics Co., Ltd.	M
Sanyo Denki Co., Ltd.	M
YASKAWA Electric Corporation	Y
Keyence Corporation	Y
Panasonic Corporation	P
OMRON Corporation	P
Fuji Electric Co., Ltd.	M
FANUC CORPORATION	F
Bosch Rexroth AG	P
Rockwell Automation, Inc.	M
SIEMENS AG	M

*Refer to page 347 for the motor model No.

Specifications

Applicable motor capacity		400 W servo motor
Drive method		Belt width 30 mm
Stroke length	mm	100 to 3500
Lead equivalent	mm	40
Max. load capacity *1	Horizontal kg	45
	Vertical kg	-
Max. speed	mm/s	2000
Rated thrust *1	N	204
Repeatability	mm	±0.04
Lost motion		0.1 mm or less
Dynamic allowable load	N	10102.1
Static allowable moment	N·m	MP: 1034, MY: 1032, MR: 908
Dynamic allowable moment	N·m	MP: 424.3, MY: 424.3, MR: 520.3
Operating ambient temperature, humidity		0 to 40°C (no freezing) 35 to 80% RH (no condensation)
Storage ambient temperature, humidity		-10 to 50°C (no freezing) 35 to 80% RH (no condensation)
Atmosphere		No corrosive gas, explosive gas, or dust

*1 Rated thrust and max. load capacity are guideline values assuming that the motor mounted will output the rated torque.

Stroke and max. speed

(mm/s)

Lead equivalent \ Stroke length	100 to 3500
40	2000

*The max. speed is the speed when the motor mounted by the customer can output a rotation speed of 3000 rpm.

Allowable overhang length

*Refer to page 390 for details.

Moment direction

MP

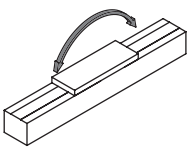

MY

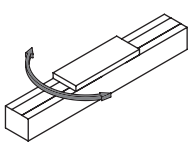

MR

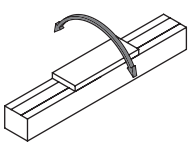

Dimensions Motor right-side mounting

● ETV-17-*****-R

· Refer to page 394 for grease nipple dimensions.

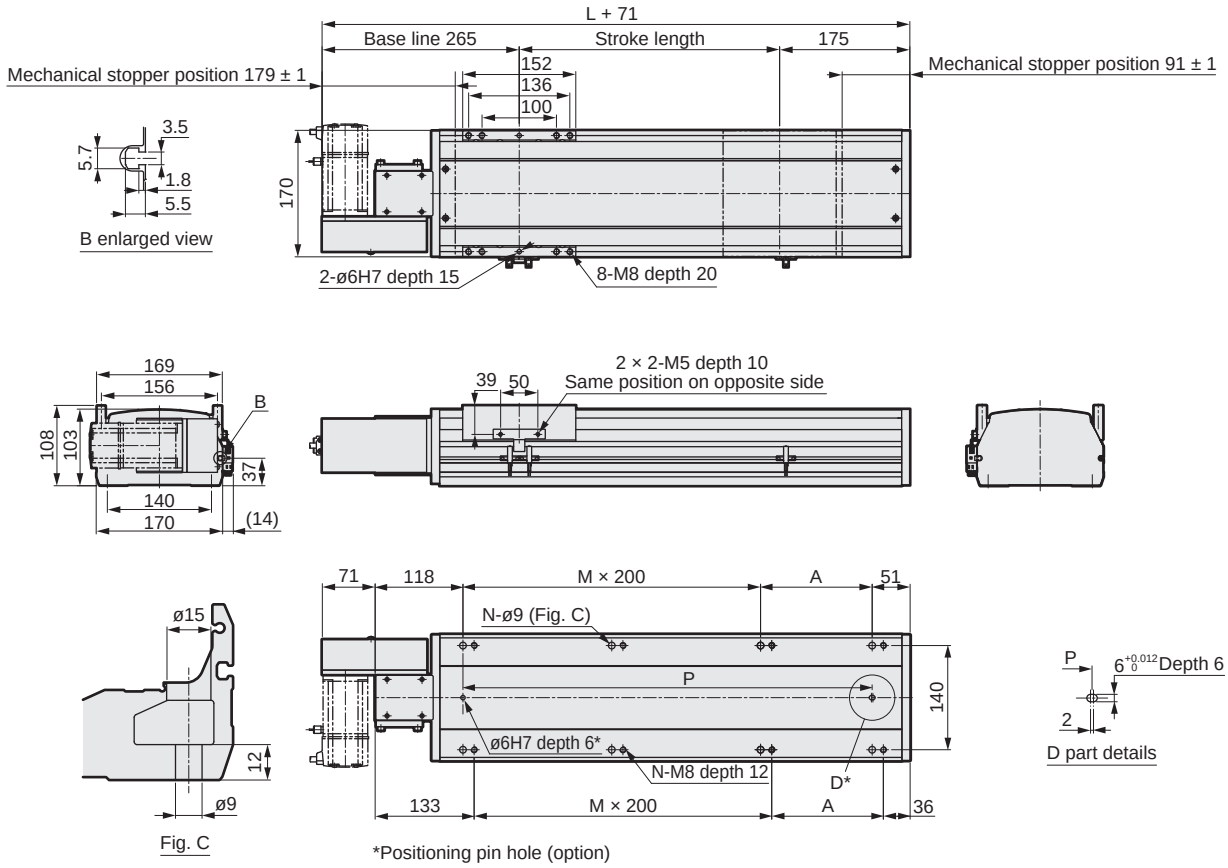

Stroke length (mm)	100	150	200	250	300	350	400	450	500	550	600	650	700	750	800	850	900	950	1000	1050	1100	1150	1200
L	469	519	569	619	669	719	769	819	869	919	969	1019	1069	1119	1169	1219	1269	1319	1369	1419	1469	1519	1569
A	100	150	200	50	100	150	200	50	100	150	200	50	100	150	200	50	100	150	200	50	100	150	200
M	1	1	1	2	2	2	2	3	3	3	3	4	4	4	4	5	5	5	5	6	6	6	6
N	6	6	6	8	8	8	8	10	10	10	10	12	12	12	12	14	14	14	14	16	16	16	16
P	300	350	400	450	500	550	600	650	700	750	800	850	900	950	1000	1050	1100	1150	1200	1250	1300	1350	1400
Weight (kg)	12.0	13.8	14.6	15.4	16.1	16.9	17.7	18.5	19.2	20.0	20.8	21.6	22.3	23.1	23.9	24.7	25.4	26.2	27.0	27.8	28.6	29.4	30.2

Stroke length (mm)	1250	1300	1350	1400	1450	1500	1550	1600	1650	1700	1750	1800	1850	1900	1950	2000	2050	2100	2150	2200	2250	2300	2350
L	1619	1669	1719	1769	1819	1869	1919	1969	2019	2069	2119	2169	2219	2269	2319	2369	2419	2469	2519	2569	2619	2669	2719
A	50	100	150	200	50	100	150	200	50	100	150	200	50	100	150	200	50	100	150	200	50	100	150
M	7	7	7	7	8	8	8	8	9	9	9	9	10	10	10	10	11	11	11	11	12	12	12
N	18	18	18	18	20	20	20	20	22	22	22	22	24	24	24	24	26	26	26	26	28	28	28
P	1450	1500	1550	1600	1650	1700	1750	1800	1850	1900	1950	2000	2050	2100	2150	2200	2250	2300	2350	2400	2450	2500	2550
Weight (kg)	31.0	31.8	32.6	33.4	34.2	35.0	35.8	36.6	37.4	38.2	39.0	39.8	40.6	41.4	42.2	43.0	43.8	44.6	45.4	46.2	47.0	47.8	48.6

Stroke length (mm)	2400	2450	2500	2550	2600	2650	2700	2750	2800	2850	2900	2950	3000	3050	3100	3150	3200	3250	3300	3350	3400	3450	3500
L	2769	2819	2869	2919	2969	3019	3069	3119	3169	3219	3269	3319	3369	3419	3469	3519	3569	3619	3669	3719	3769	3819	3869
A	200	50	100	150	200	50	100	150	200	50	100	150	200	50	100	150	200	50	100	150	200	50	100
M	12	13	13	13	13	14	14	14	14	15	15	15	15	16	16	16	16	17	17	17	17	18	18
N	28	30	30	30	30	32	32	32	32	34	34	34	34	36	36	36	36	38	38	38	38	40	40
P	2600	2650	2700	2750	2800	2850	2900	2950	3000	3050	3100	3150	3200	3250	3300	3350	3400	3450	3500	3550	3600	3650	3700
Weight (kg)	49.4	50.2	51.0	51.8	52.6	53.4	54.2	55.0	55.8	56.6	57.4	58.2	59.0	59.8	60.6	61.4	62.2	63.0	63.8	64.6	65.4	66.2	67.0

*Refer to page 379 for motor mounting part dimensions and list of attachments.

Dimensions Motor right top mounting

● ETV-17-*****-S

· Refer to page 394 for grease nipple dimensions.

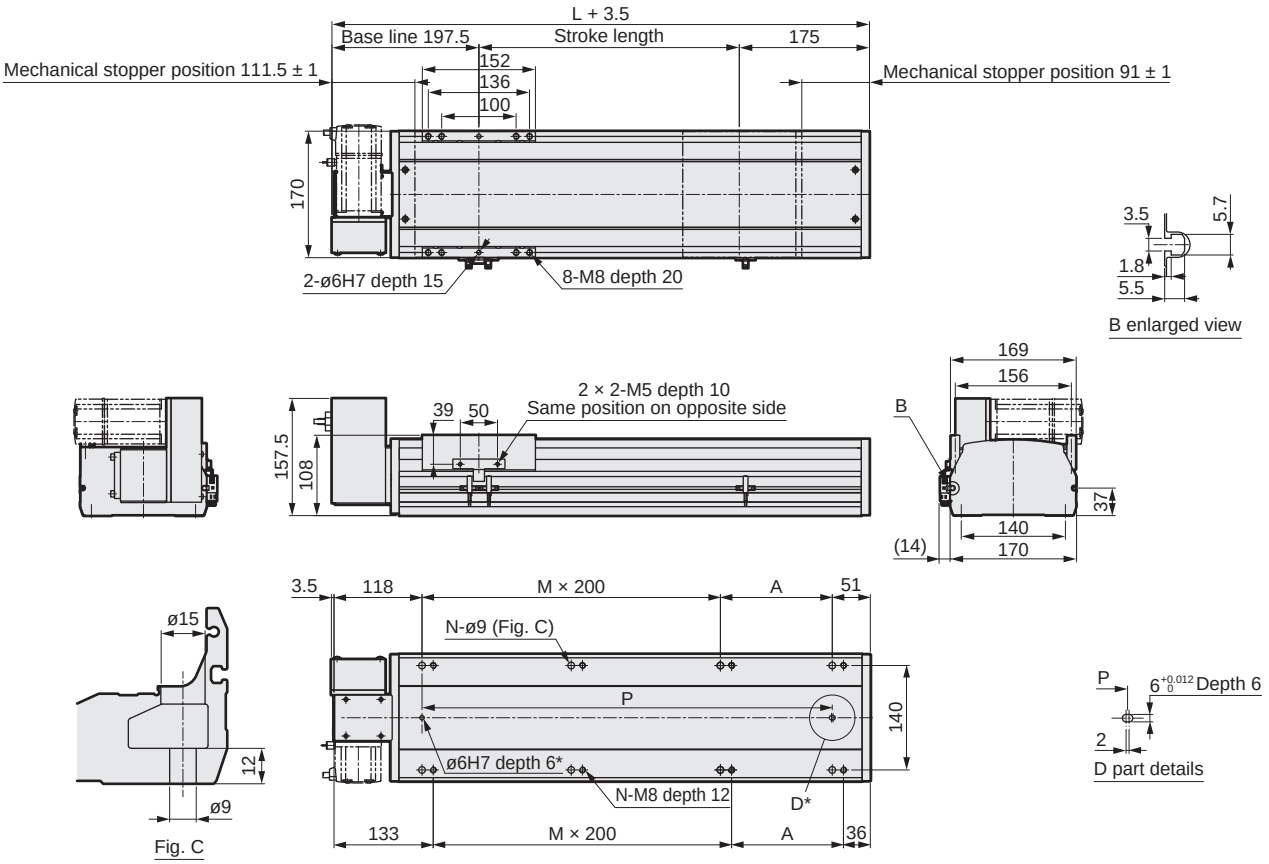

*Positioning pin hole (option)

Stroke length (mm)	100	150	200	250	300	350	400	450	500	550	600	650	700	750	800	850	900	950	1000	1050	1100	1150	1200
L	469	519	569	619	669	719	769	819	869	919	969	1019	1069	1119	1169	1219	1269	1319	1369	1419	1469	1519	1569
A	100	150	200	50	100	150	200	50	100	150	200	50	100	150	200	50	100	150	200	50	100	150	200
M	1	1	1	2	2	2	2	3	3	3	3	4	4	4	4	5	5	5	5	6	6	6	6
N	6	6	6	8	8	8	8	10	10	10	10	12	12	12	12	14	14	14	14	16	16	16	16
P	300	350	400	450	500	550	600	650	700	750	800	850	900	950	1000	1050	1100	1150	1200	1250	1300	1350	1400
Weight (kg)	12.0	13.8	14.6	15.4	16.1	16.9	17.7	18.5	19.2	20.0	20.8	21.6	22.3	23.1	23.9	24.7	25.4	26.2	27.0	27.8	28.6	29.4	30.2

Stroke length (mm)	1250	1300	1350	1400	1450	1500	1550	1600	1650	1700	1750	1800	1850	1900	1950	2000	2050	2100	2150	2200	2250	2300	2350
L	1619	1669	1719	1769	1819	1869	1919	1969	2019	2069	2119	2169	2219	2269	2319	2369	2419	2469	2519	2569	2619	2669	2719
A	50	100	150	200	50	100	150	200	50	100	150	200	50	100	150	200	50	100	150	200	50	100	150
M	7	7	7	7	8	8	8	8	9	9	9	9	10	10	10	10	11	11	11	11	12	12	12
N	18	18	18	18	20	20	20	20	22	22	22	22	24	24	24	24	26	26	26	26	28	28	28
P	1450	1500	1550	1600	1650	1700	1750	1800	1850	1900	1950	2000	2050	2100	2150	2200	2250	2300	2350	2400	2450	2500	2550
Weight (kg)	31.0	31.8	32.6	33.4	34.2	35.0	35.8	36.6	37.4	38.2	39.0	39.8	40.6	41.4	42.2	43.0	43.8	44.6	45.4	46.2	47.0	47.8	48.6

Stroke length (mm)	2400	2450	2500	2550	2600	2650	2700	2750	2800	2850	2900	2950	3000	3050	3100	3150	3200	3250	3300	3350	3400	3450	3500
L	2769	2819	2869	2919	2969	3019	3069	3119	3169	3219	3269	3319	3369	3419	3469	3519	3569	3619	3669	3719	3769	3819	3869
A	200	50	100	150	200	50	100	150	200	50	100	150	200	50	100	150	200	50	100	150	200	50	100
M	12	13	13	13	13	14	14	14	14	15	15	15	15	16	16	16	16	17	17	17	17	18	18
N	28	30	30	30	30	32	32	32	32	34	34	34	34	36	36	36	36	38	38	38	38	40	40
P	2600	2650	2700	2750	2800	2850	2900	2950	3000	3050	3100	3150	3200	3250	3300	3350	3400	3450	3500	3550	3600	3650	3700
Weight (kg)	49.4	50.2	51.0	51.8	52.6	53.4	54.2	55.0	55.8	56.6	57.4	58.2	59.0	59.8	60.6	61.4	62.2	63.0	63.8	64.6	65.4	66.2	67.0

*Refer to page 379 for motor mounting part dimensions and list of attachments.

Dimensions Motor right bottom mounting

● ETV-17-*****-T

· Refer to page 394 for grease nipple dimensions.

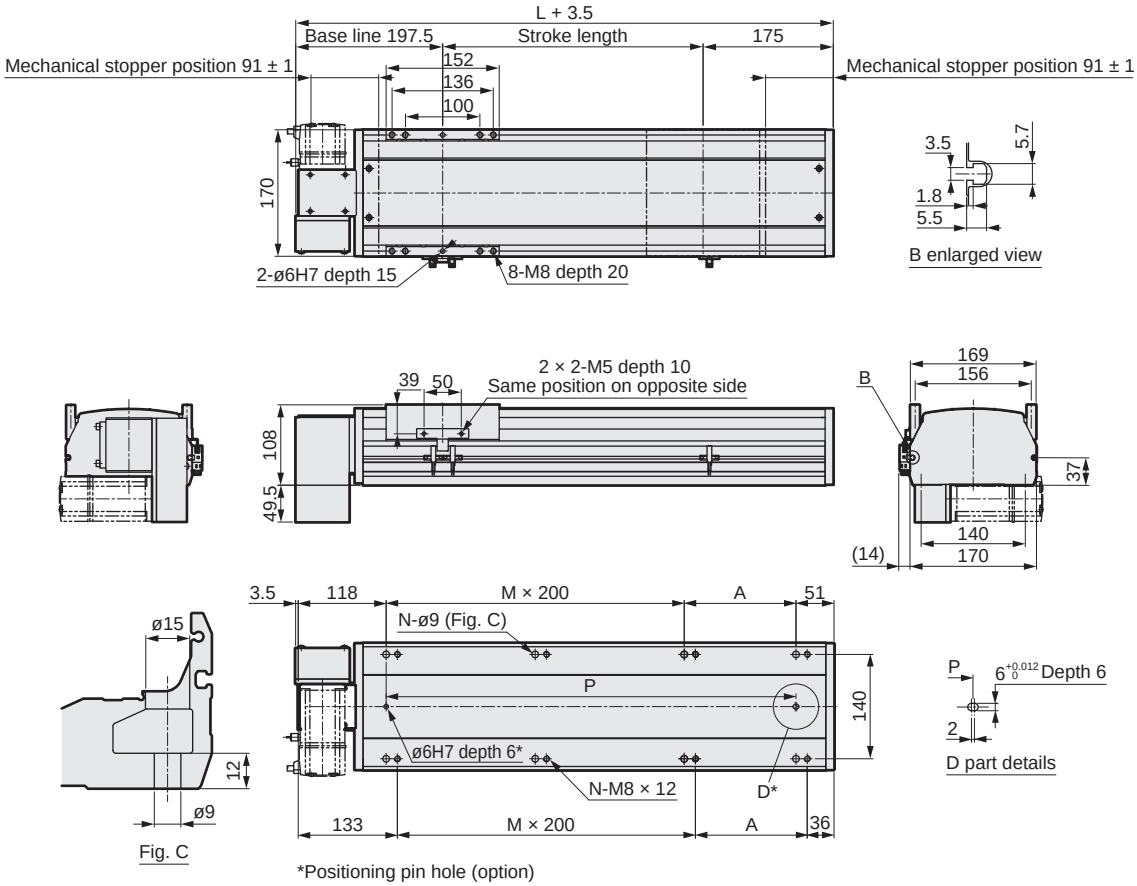

*Positioning pin hole (option)

Stroke length (mm)	100	150	200	250	300	350	400	450	500	550	600	650	700	750	800	850	900	950	1000	1050	1100	1150	1200
L	469	519	569	619	669	719	769	819	869	919	969	1019	1069	1119	1169	1219	1269	1319	1369	1419	1469	1519	1569
A	100	150	200	50	100	150	200	50	100	150	200	50	100	150	200	50	100	150	200	50	100	150	200
M	1	1	1	2	2	2	2	3	3	3	3	4	4	4	4	5	5	5	5	6	6	6	6
N	6	6	6	8	8	8	8	10	10	10	10	12	12	12	12	14	14	14	14	16	16	16	16
P	300	350	400	450	500	550	600	650	700	750	800	850	900	950	1000	1050	1100	1150	1200	1250	1300	1350	1400
Weight (kg)	12.0	13.8	14.6	15.4	16.1	16.9	17.7	18.5	19.2	20.0	20.8	21.6	22.3	23.1	23.9	24.7	25.4	26.2	27.0	27.8	28.6	29.4	30.2

Stroke length (mm)	1250	1300	1350	1400	1450	1500	1550	1600	1650	1700	1750	1800	1850	1900	1950	2000	2050	2100	2150	2200	2250	2300	2350
L	1619	1669	1719	1769	1819	1869	1919	1969	2019	2069	2119	2169	2219	2269	2319	2369	2419	2469	2519	2569	2619	2669	2719
A	50	100	150	200	50	100	150	200	50	100	150	200	50	100	150	200	50	100	150	200	50	100	150
M	7	7	7	7	8	8	8	8	9	9	9	9	10	10	10	10	11	11	11	11	12	12	12
N	18	18	18	18	20	20	20	20	22	22	22	22	24	24	24	24	26	26	26	26	28	28	28
P	1450	1500	1550	1600	1650	1700	1750	1800	1850	1900	1950	2000	2050	2100	2150	2200	2250	2300	2350	2400	2450	2500	2550
Weight (kg)	31.0	31.8	32.6	33.4	34.2	35.0	35.8	36.6	37.4	38.2	39.0	39.8	40.6	41.4	42.2	43.0	43.8	44.6	45.4	46.2	47.0	47.8	48.6

Stroke length (mm)	2400	2450	2500	2550	2600	2650	2700	2750	2800	2850	2900	2950	3000	3050	3100	3150	3200	3250	3300	3350	3400	3450	3500
L	2769	2819	2869	2919	2969	3019	3069	3119	3169	3219	3269	3319	3369	3419	3469	3519	3569	3619	3669	3719	3769	3819	3869
A	200	50	100	150	200	50	100	150	200	50	100	150	200	50	100	150	200	50	100	150	200	50	100
M	12	13	13	13	13	14	14	14	14	15	15	15	15	16	16	16	16	17	17	17	17	18	18
N	28	30	30	30	30	32	32	32	32	34	34	34	34	36	36	36	36	38	38	38	38	40	40
P	2600	2650	2700	2750	2800	2850	2900	2950	3000	3050	3100	3150	3200	3250	3300	3350	3400	3450	3500	3550	3600	3650	3700
Weight (kg)	49.4	50.2	51.0	51.8	52.6	53.4	54.2	55.0	55.8	56.6	57.4	58.2	59.0	59.8	60.6	61.4	62.2	63.0	63.8	64.6	65.4	66.2	67.0

*Refer to page 379 for motor mounting part dimensions and list of attachments.

Dimensions Motor left-side mounting

● ETV-17-*****-L

· Refer to page 394 for grease nipple dimensions.

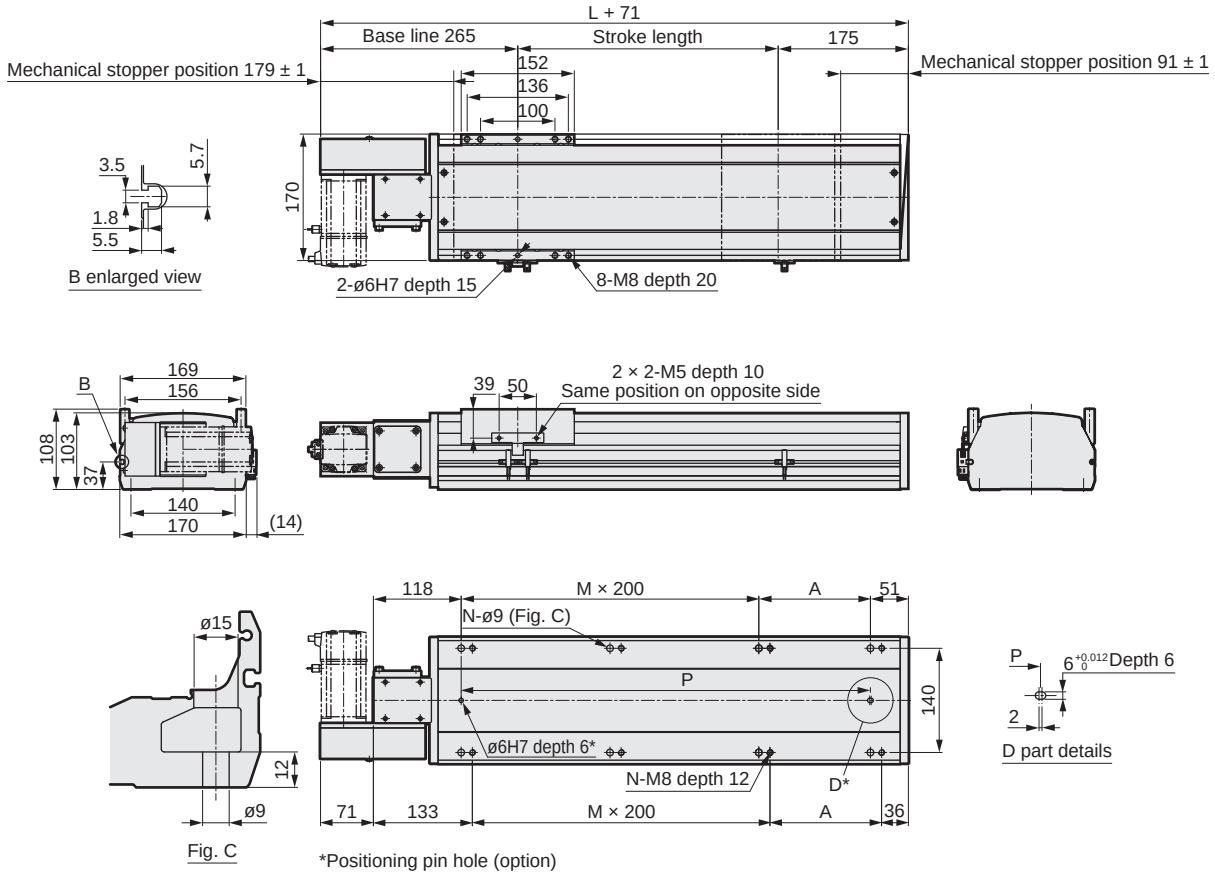

Stroke length (mm)	100	150	200	250	300	350	400	450	500	550	600	650	700	750	800	850	900	950	1000	1050	1100	1150	1200
L	469	519	569	619	669	719	769	819	869	919	969	1019	1069	1119	1169	1219	1269	1319	1369	1419	1469	1519	1569
A	100	150	200	50	100	150	200	50	100	150	200	50	100	150	200	50	100	150	200	50	100	150	200
M	1	1	1	2	2	2	2	3	3	3	3	4	4	4	4	5	5	5	5	6	6	6	6
N	6	6	6	8	8	8	8	10	10	10	10	12	12	12	12	14	14	14	14	16	16	16	16
P	300	350	400	450	500	550	600	650	700	750	800	850	900	950	1000	1050	1100	1150	1200	1250	1300	1350	1400
Weight (kg)	12.0	13.8	14.6	15.4	16.1	16.9	17.7	18.5	19.2	20.0	20.8	21.6	22.3	23.1	23.9	24.7	25.4	26.2	27.0	27.8	28.6	29.4	30.2

Stroke length (mm)	1250	1300	1350	1400	1450	1500	1550	1600	1650	1700	1750	1800	1850	1900	1950	2000	2050	2100	2150	2200	2250	2300	2350
L	1619	1669	1719	1769	1819	1869	1919	1969	2019	2069	2119	2169	2219	2269	2319	2369	2419	2469	2519	2569	2619	2669	2719
A	50	100	150	200	50	100	150	200	50	100	150	200	50	100	150	200	50	100	150	200	50	100	150
M	7	7	7	7	8	8	8	8	9	9	9	9	10	10	10	10	11	11	11	11	12	12	12
N	18	18	18	18	20	20	20	20	22	22	22	22	24	24	24	24	26	26	26	26	28	28	28
P	1450	1500	1550	1600	1650	1700	1750	1800	1850	1900	1950	2000	2050	2100	2150	2200	2250	2300	2350	2400	2450	2500	2550
Weight (kg)	31.0	31.8	32.6	33.4	34.2	35.0	35.8	36.6	37.4	38.2	39.0	39.8	40.6	41.4	42.2	43.0	43.8	44.6	45.4	46.2	47.0	47.8	48.6

Stroke length (mm)	2400	2450	2500	2550	2600	2650	2700	2750	2800	2850	2900	2950	3000	3050	3100	3150	3200	3250	3300	3350	3400	3450	3500
L	2769	2819	2869	2919	2969	3019	3069	3119	3169	3219	3269	3319	3369	3419	3469	3519	3569	3619	3669	3719	3769	3819	3869
A	200	50	100	150	200	50	100	150	200	50	100	150	200	50	100	150	200	50	100	150	200	50	100
M	12	13	13	13	13	14	14	14	14	15	15	15	15	16	16	16	16	17	17	17	17	18	18
N	28	30	30	30	30	32	32	32	32	34	34	34	34	36	36	36	36	38	38	38	38	40	40
P	2600	2650	2700	2750	2800	2850	2900	2950	3000	3050	3100	3150	3200	3250	3300	3350	3400	3450	3500	3550	3600	3650	3700
Weight (kg)	49.4	50.2	51.0	51.8	52.6	53.4	54.2	55.0	55.8	56.6	57.4	58.2	59.0	59.8	60.6	61.4	62.2	63.0	63.8	64.6	65.4	66.2	67.0

*Refer to page 379 for motor mounting part dimensions and list of attachments.

Dimensions Motor left top mounting

● ETV-17-*****-V

· Refer to page 394 for grease nipple dimensions.

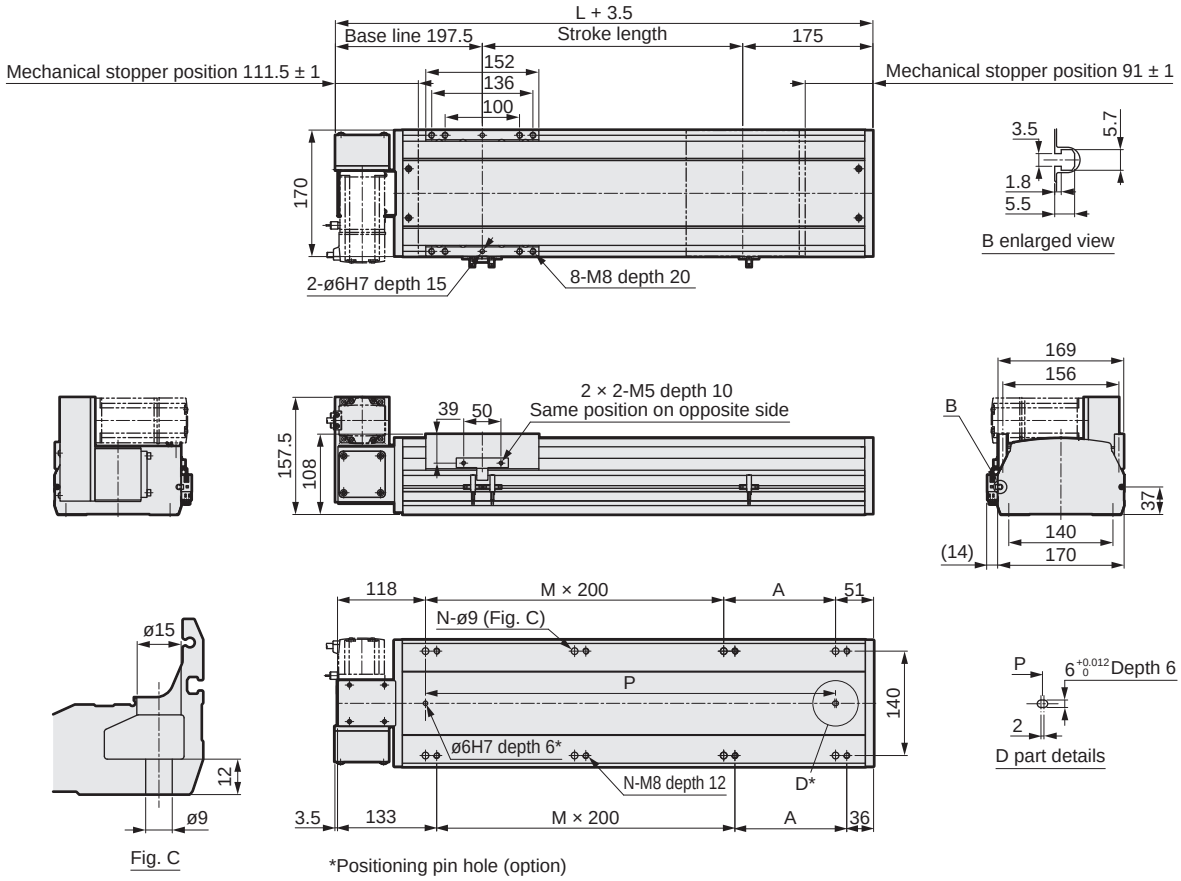

Stroke length (mm)	100	150	200	250	300	350	400	450	500	550	600	650	700	750	800	850	900	950	1000	1050	1100	1150	1200
L	469	519	569	619	669	719	769	819	869	919	969	1019	1069	1119	1169	1219	1269	1319	1369	1419	1469	1519	1569
A	100	150	200	50	100	150	200	50	100	150	200	50	100	150	200	50	100	150	200	50	100	150	200
M	1	1	1	2	2	2	2	3	3	3	3	4	4	4	4	5	5	5	5	6	6	6	6
N	6	6	6	8	8	8	8	10	10	10	10	12	12	12	12	14	14	14	14	16	16	16	16
P	300	350	400	450	500	550	600	650	700	750	800	850	900	950	1000	1050	1100	1150	1200	1250	1300	1350	1400
Weight (kg)	12.0	13.8	14.6	15.4	16.1	16.9	17.7	18.5	19.2	20.0	20.8	21.6	22.3	23.1	23.9	24.7	25.4	26.2	27.0	27.8	28.6	29.4	30.2

Stroke length (mm)	1250	1300	1350	1400	1450	1500	1550	1600	1650	1700	1750	1800	1850	1900	1950	2000	2050	2100	2150	2200	2250	2300	2350
L	1619	1669	1719	1769	1819	1869	1919	1969	2019	2069	2119	2169	2219	2269	2319	2369	2419	2469	2519	2569	2619	2669	2719
A	50	100	150	200	50	100	150	200	50	100	150	200	50	100	150	200	50	100	150	200	50	100	150
M	7	7	7	7	8	8	8	8	9	9	9	9	10	10	10	10	11	11	11	11	12	12	12
N	18	18	18	18	20	20	20	20	22	22	22	22	24	24	24	24	26	26	26	26	28	28	28
P	1450	1500	1550	1600	1650	1700	1750	1800	1850	1900	1950	2000	2050	2100	2150	2200	2250	2300	2350	2400	2450	2500	2550
Weight (kg)	31.0	31.8	32.6	33.4	34.2	35.0	35.8	36.6	37.4	38.2	39.0	39.8	40.6	41.4	42.2	43.0	43.8	44.6	45.4	46.2	47.0	47.8	48.6

Stroke length (mm)	2400	2450	2500	2550	2600	2650	2700	2750	2800	2850	2900	2950	3000	3050	3100	3150	3200	3250	3300	3350	3400	3450	3500
L	2769	2819	2869	2919	2969	3019	3069	3119	3169	3219	3269	3319	3369	3419	3469	3519	3569	3619	3669	3719	3769	3819	3869
A	200	50	100	150	200	50	100	150	200	50	100	150	200	50	100	150	200	50	100	150	200	50	100
M	12	13	13	13	13	14	14	14	14	15	15	15	15	16	16	16	16	17	17	17	17	18	18
N	28	30	30	30	30	32	32	32	32	34	34	34	34	36	36	36	36	38	38	38	38	40	40
P	2600	2650	2700	2750	2800	2850	2900	2950	3000	3050	3100	3150	3200	3250	3300	3350	3400	3450	3500	3550	3600	3650	3700
Weight (kg)	49.4	50.2	51.0	51.8	52.6	53.4	54.2	55.0	55.8	56.6	57.4	58.2	59.0	59.8	60.6	61.4	62.2	63.0	63.8	64.6	65.4	66.2	67.0

*Refer to page 379 for motor mounting part dimensions and list of attachments.

Dimensions Motor left bottom mounting

● ETV-17-*****-W

· Refer to page 394 for grease nipple dimensions.

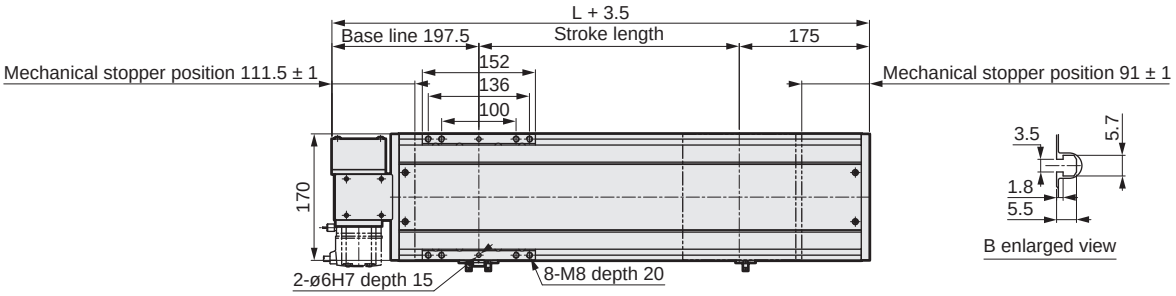

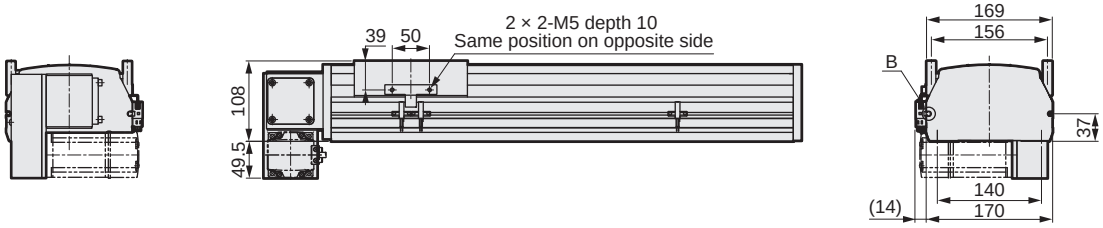

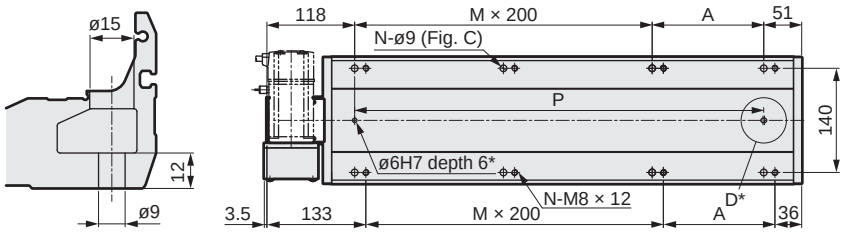

Stroke length (mm)	100	150	200	250	300	350	400	450	500	550	600	650	700	750	800	850	900	950	1000	1050	1100	1150	1200
L	469	519	569	619	669	719	769	819	869	919	969	1019	1069	1119	1169	1219	1269	1319	1369	1419	1469	1519	1569
A	100	150	200	50	100	150	200	50	100	150	200	50	100	150	200	50	100	150	200	50	100	150	200
M	1	1	1	2	2	2	2	3	3	3	3	4	4	4	4	5	5	5	5	6	6	6	6
N	6	6	6	8	8	8	8	10	10	10	10	12	12	12	12	14	14	14	14	16	16	16	16
P	300	350	400	450	500	550	600	650	700	750	800	850	900	950	1000	1050	1100	1150	1200	1250	1300	1350	1400
Weight (kg)	12.0	13.8	14.6	15.4	16.1	16.9	17.7	18.5	19.2	20.0	20.8	21.6	22.3	23.1	23.9	24.7	25.4	26.2	27.0	27.8	28.6	29.4	30.2

Stroke length (mm)	1250	1300	1350	1400	1450	1500	1550	1600	1650	1700	1750	1800	1850	1900	1950	2000	2050	2100	2150	2200	2250	2300	2350
L	1619	1669	1719	1769	1819	1869	1919	1969	2019	2069	2119	2169	2219	2269	2319	2369	2419	2469	2519	2569	2619	2669	2719
A	50	100	150	200	50	100	150	200	50	100	150	200	50	100	150	200	50	100	150	200	50	100	150
M	7	7	7	7	8	8	8	8	9	9	9	9	10	10	10	10	11	11	11	11	12	12	12
N	18	18	18	18	20	20	20	20	22	22	22	22	24	24	24	24	26	26	26	26	28	28	28
P	1450	1500	1550	1600	1650	1700	1750	1800	1850	1900	1950	2000	2050	2100	2150	2200	2250	2300	2350	2400	2450	2500	2550
Weight (kg)	31.0	31.8	32.6	33.4	34.2	35.0	35.8	36.6	37.4	38.2	39.0	39.8	40.6	41.4	42.2	43.0	43.8	44.6	45.4	46.2	47.0	47.8	48.6

Stroke length (mm)	2400	2450	2500	2550	2600	2650	2700	2750	2800	2850	2900	2950	3000	3050	3100	3150	3200	3250	3300	3350	3400	3450	3500
L	2769	2819	2869	2919	2969	3019	3069	3119	3169	3219	3269	3319	3369	3419	3469	3519	3569	3619	3669	3719	3769	3819	3869
A	200	50	100	150	200	50	100	150	200	50	100	150	200	50	100	150	200	50	100	150	200	50	100
M	12	13	13	13	13	14	14	14	14	15	15	15	15	16	16	16	16	17	17	17	17	18	18
N	28	30	30	30	30	32	32	32	32	34	34	34	34	36	36	36	36	38	38	38	38	40	40
P	2600	2650	2700	2750	2800	2850	2900	2950	3000	3050	3100	3150	3200	3250	3300	3350	3400	3450	3500	3550	3600	3650	3700
Weight (kg)	49.4	50.2	51.0	51.8	52.6	53.4	54.2	55.0	55.8	56.6	57.4	58.2	59.0	59.8	60.6	61.4	62.2	63.0	63.8	64.6	65.4	66.2	67.0

*Refer to page 379 for motor mounting part dimensions and list of attachments.

Motor mounting part

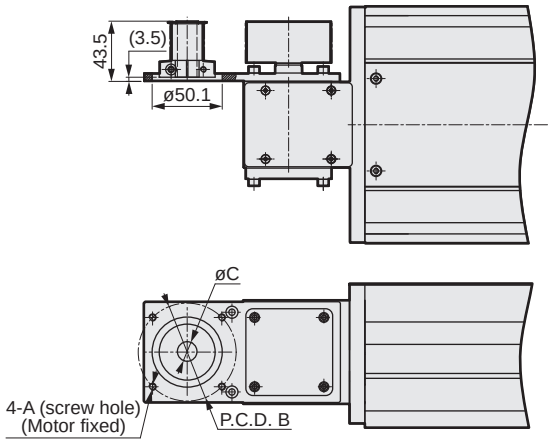

Mounted motor specification		A	B	C	Motor mounting bolt
M	400 W	M5	ø70	ø14	4-M5 × L12
Y	400 W	M5	ø70	ø14	4-M5 × L12
P	400 W	M4	ø70	ø14	4-M4 × L12
F	400 W	M5	ø70	ø14	4-M5 × L12

List of attachments

[Motor mounting parts]

Mounted motor specification	Timing belt, pulley	Motor capacity	Motor mounting bolt	
			Size	Quantity
M	Included at shipment	400 W	M5	4
Y			M5	4
P			M4	4
F			M5	4

[Origin sensor/Limit sensor]

Manufacturer	Model	Quantity
OMRON Corporation	EE-SX672	3

*Refer to page 392 for sensor specifications.

MEMO

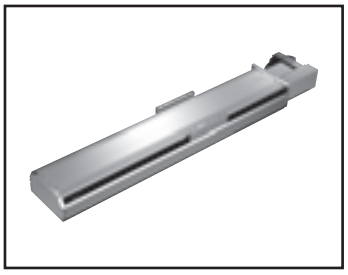

Electric actuator Belt

ETV-22 Series

Motor side mounting (left, right, bottom)

● Servo motor capacity: 750 W

How to order

ETV - 22 - 40 010 - R M 8 X N N N N

(A) (B) (C) (D) (E) (F) (G) (H) (I) (J) (K)

(A) Body size

22	Body width 220 mm

(B) Lead equivalent

40	40 mm

(C) Stroke length *1 *2

010 to 350	100 mm (In 50 mm increments) 3500 mm

(D) Motor mounting direction *5

R	Right mounting
S	Right top mounting
T	Right bottom mounting
L	Left mounting
V	Left top mounting
W	Left bottom mounting

(E) Mounted motor specification

M	Select the mounted motor specification from the table below.
Y	
P	
F	

(F) Motor capacity

8	750 W

(G) Driving belt

X	Standard (rubber)
L	Low dust generation (urethane)

(H) Origin sensor (1 pc) *1 *2 *3

N	None
C	Outside motor side
D	Outside motor opposite side

(I) Limit sensor (2 pcs) *1 *2 *3

N	None
B	Outside

(J) Grease nipple *3 *4 *5

N	None (Body mounting direction: Standard)
R	Right
L	Left

(K) Positioning pin hole

N	None
P	Yes

*1: Origin sensor and limit sensor are available as a set. As it is both-or-nothing, select "None" for both.
*2: The user can adjust the sensor position. (Included at shipment)
*3: Contact CKD to use the origin sensor, limit sensor and grease nipple in the same direction.
*4: "Body mounting direction: Standard" here indicates that either top or bottom mounting is possible.
*5: When selecting motor mounting direction R, S, or T, grease nipple R cannot be selected.
When selecting L, V, or W, grease nipple L cannot be selected.

Manufacturer	750 W
Mitsubishi Electric Corporation	M
Delta Electronics Co., Ltd.	M
Sanyo Denki Co., Ltd.	-
YASKAWA Electric Corporation	Y
Keyence Corporation	Y
Panasonic Corporation	P
OMRON Corporation	P
Fuji Electric Co., Ltd.	M
FANUC CORPORATION	F
Bosch Rexroth AG	P
Rockwell Automation, Inc.	M
SIEMENS AG	M

*Refer to page 347 for the motor model No.

Specifications

Applicable motor capacity		750 W servo motor
Drive method		Belt width 50 mm
Stroke length	mm	100 to 3500
Lead equivalent	mm	40
Max. load capacity *1	Horizontal kg	85
	Vertical kg	-
Max. speed	mm/s	2000
Rated thrust *1	N	367
Repeatability	mm	±0.04
Lost motion		0.1 mm or less
Dynamic allowable load	N	14174.2
Static allowable moment	N·m	MP: 2052, MY: 2052, MR: 1810
Dynamic allowable moment	N·m	MP: 1098.5, MY: 1098.5, MR: 999.3
Operating ambient temperature, humidity		0 to 40°C (no freezing) 35 to 80% RH (no condensation)
Storage ambient temperature, humidity		-10 to 50°C (no freezing) 35 to 80% RH (no condensation)
Atmosphere		No corrosive gas, explosive gas, or dust

*1 Rated thrust and max. load capacity are guideline values assuming that the motor mounted will output the rated torque.

Stroke and max. speed

(mm/s)

Lead equivalent \ Stroke length	100 to 3500
40	2000

*The max. speed is the speed when the motor mounted by the customer can output a rotation speed of 3000 rpm.

Allowable overhang length

*Refer to page 390 for details.

Moment direction

MP MY MR

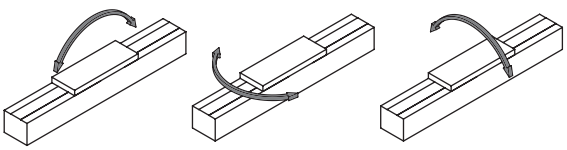

Dimensions Motor right-side mounting

● ETV-22-*****-R

· Refer to page 394 for grease nipple dimensions.

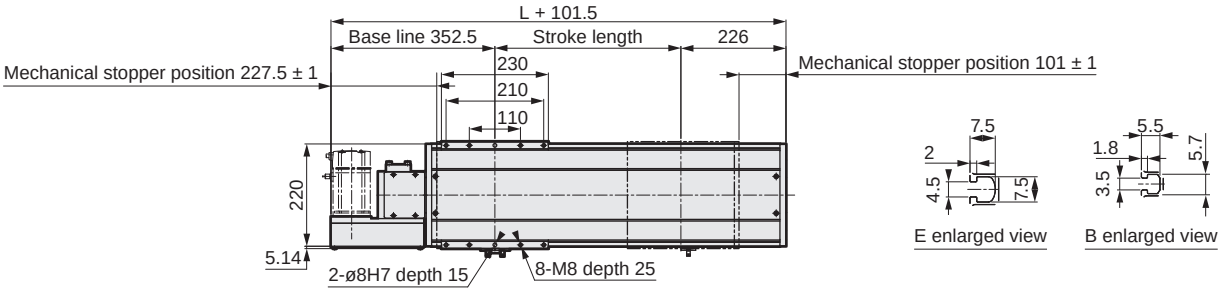

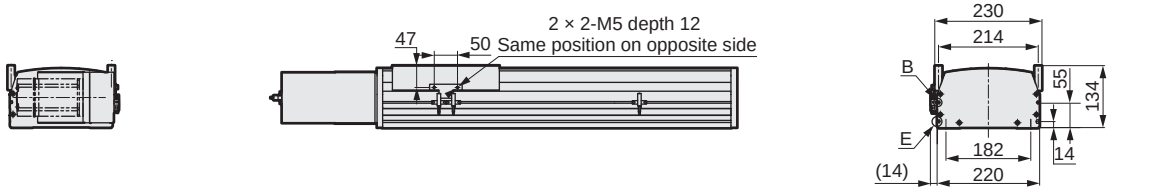

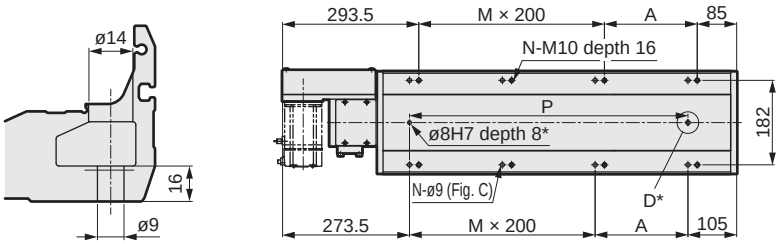

Fig. C

*Positioning pin hole (option)

Stroke length (mm)	100	150	200	250	300	350	400	450	500	550	600	650	700	750	800	850	900	950	1000	1050	1100	1150	1200
L	577	627	677	727	777	827	877	927	977	1027	1077	1127	1177	1227	1277	1327	1377	1427	1477	1527	1577	1627	1677
A	100	150	200	50	100	150	200	50	100	150	200	50	100	150	200	50	100	150	200	50	100	150	200
M	1	1	1	2	2	2	2	3	3	3	3	4	4	4	4	5	5	5	5	6	6	6	6
N	6	6	6	8	8	8	8	10	10	10	10	12	12	12	12	14	14	14	14	16	16	16	16
P	300	350	400	450	500	550	600	650	700	750	800	850	900	950	1000	1050	1100	1150	1200	1250	1300	1350	1400
Weight (kg)	30.0	31.2	32.4	33.6	34.8	36.0	37.2	38.4	39.6	40.8	42.0	43.2	44.4	45.6	46.8	48.0	49.2	50.4	51.6	52.8	54.0	55.2	56.4

Stroke length (mm)	1250	1300	1350	1400	1450	1500	1550	1600	1650	1700	1750	1800	1850	1900	1950	2000	2050	2100	2150	2200	2250	2300	2350
L	1727	1777	1827	1877	1927	1977	2027	2077	2127	2177	2227	2277	2327	2377	2427	2477	2527	2577	2627	2677	2727	2777	2827
A	50	100	150	200	50	100	150	200	50	100	150	200	50	100	150	200	50	100	150	200	50	100	150
M	7	7	7	7	8	8	8	8	9	9	9	9	10	10	10	10	11	11	11	11	12	12	12
N	18	18	18	18	20	20	20	20	22	22	22	22	24	24	24	24	26	26	26	26	28	28	28
P	1450	1500	1550	1600	1650	1700	1750	1800	1850	1900	1950	2000	2050	2100	2150	2200	2250	2300	2350	2400	2450	2500	2550
Weight (kg)	57.6	58.8	60.0	61.2	62.4	63.6	64.8	66.0	67.2	68.4	69.6	70.8	72.0	73.2	74.4	75.6	76.8	78.0	79.2	80.4	81.6	82.8	84.0

Stroke length (mm)	2400	2450	2500	2550	2600	2650	2700	2750	2800	2850	2900	2950	3000	3050	3100	3150	3200	3250	3300	3350	3400	3450	3500
L	2877	2927	2977	3027	3077	3127	3177	3227	3277	3327	3377	3427	3477	3527	3577	3627	3677	3727	3777	3827	3877	3927	3977
A	200	50	100	150	200	50	100	150	200	50	100	150	200	50	100	150	200	50	100	150	200	50	100
M	12	13	13	13	13	14	14	14	14	15	15	15	15	16	16	16	16	17	17	17	17	18	18
N	28	30	30	30	30	32	32	32	32	34	34	34	34	36	36	36	36	38	38	38	38	40	40
P	2600	2650	2700	2750	2800	2850	2900	2950	3000	3050	3100	3150	3200	3250	3300	3350	3400	3450	3500	3550	3600	3650	3700
Weight (kg)	85.2	86.4	87.6	88.8	90.0	91.2	92.4	93.6	94.8	96.0	97.2	98.4	99.6	100.8	102.0	103.2	104.4	105.6	106.8	108.0	109.2	110.4	111.6

*Refer to page 387 for motor mounting part dimensions and list of attachments.

Dimensions Motor right top mounting

● ETV-22-*****-S

· Refer to page 394 for grease nipple dimensions.

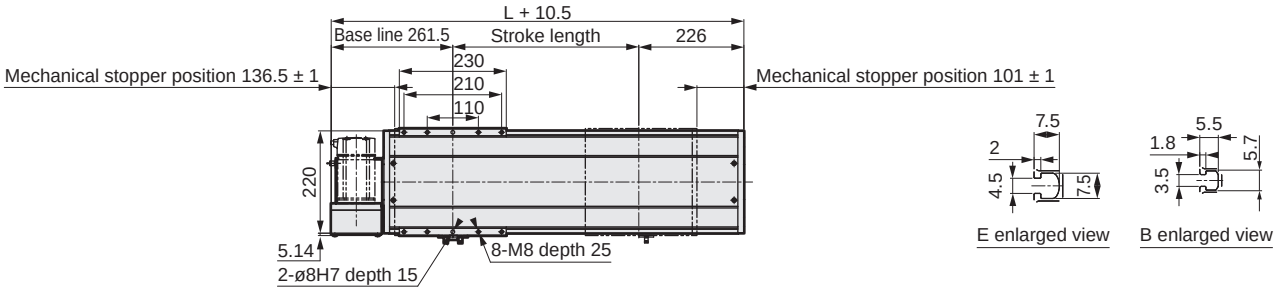

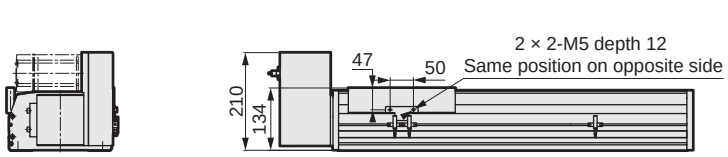

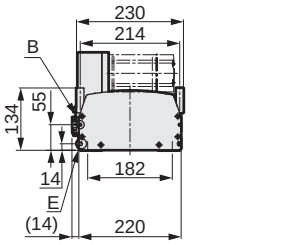

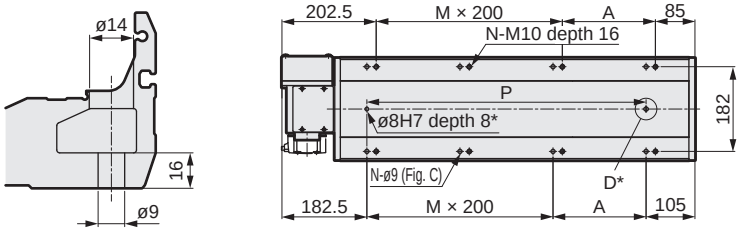

Fig. C

* Positioning pin hole (option)

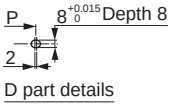

D part details

Stroke length (mm)	100	150	200	250	300	350	400	450	500	550	600	650	700	750	800	850	900	950	1000	1050	1100	1150	1200
L	577	627	677	727	777	827	877	927	977	1027	1077	1127	1177	1227	1277	1327	1377	1427	1477	1527	1577	1627	1677
A	100	150	200	50	100	150	200	50	100	150	200	50	100	150	200	50	100	150	200	50	100	150	200
M	1	1	1	2	2	2	2	3	3	3	3	4	4	4	4	5	5	5	5	6	6	6	6
N	6	6	6	8	8	8	8	10	10	10	10	12	12	12	12	14	14	14	14	16	16	16	16
P	300	350	400	450	500	550	600	650	700	750	800	850	900	950	1000	1050	1100	1150	1200	1250	1300	1350	1400
Weight (kg)	30.0	31.2	32.4	33.6	34.8	36.0	37.2	38.4	39.6	40.8	42.0	43.2	44.4	45.6	46.8	48.0	49.2	50.4	51.6	52.8	54.0	55.2	56.4

Stroke length (mm)	1250	1300	1350	1400	1450	1500	1550	1600	1650	1700	1750	1800	1850	1900	1950	2000	2050	2100	2150	2200	2250	2300	2350
L	1727	1777	1827	1877	1927	1977	2027	2077	2127	2177	2227	2277	2327	2377	2427	2477	2527	2577	2627	2677	2727	2777	2827
A	50	100	150	200	50	100	150	200	50	100	150	200	50	100	150	200	50	100	150	200	50	100	150
M	7	7	7	7	8	8	8	8	9	9	9	9	10	10	10	10	11	11	11	11	12	12	12
N	18	18	18	18	20	20	20	20	22	22	22	22	24	24	24	24	26	26	26	26	28	28	28
P	1450	1500	1550	1600	1650	1700	1750	1800	1850	1900	1950	2000	2050	2100	2150	2200	2250	2300	2350	2400	2450	2500	2550
Weight (kg)	57.6	58.8	60.0	61.2	62.4	63.6	64.8	66.0	67.2	68.4	69.6	70.8	72.0	73.2	74.4	75.6	76.8	78.0	79.2	80.4	81.6	82.8	84.0

Stroke length (mm)	2400	2450	2500	2550	2600	2650	2700	2750	2800	2850	2900	2950	3000	3050	3100	3150	3200	3250	3300	3350	3400	3450	3500
L	2877	2927	2977	3027	3077	3127	3177	3227	3277	3327	3377	3427	3477	3527	3577	3627	3677	3727	3777	3827	3877	3927	3977
A	200	50	100	150	200	50	100	150	200	50	100	150	200	50	100	150	200	50	100	150	200	50	100
M	12	13	13	13	13	14	14	14	14	15	15	15	15	16	16	16	16	17	17	17	17	18	18
N	28	30	30	30	30	32	32	32	32	34	34	34	34	36	36	36	36	38	38	38	38	40	40
P	2600	2650	2700	2750	2800	2850	2900	2950	3000	3050	3100	3150	3200	3250	3300	3350	3400	3450	3500	3550	3600	3650	3700
Weight (kg)	85.2	86.4	87.6	88.8	90.0	91.2	92.4	93.6	94.8	96.0	97.2	98.4	99.6	100.8	102.0	103.2	104.4	105.6	106.8	108.0	109.2	110.4	111.6

*Refer to page 387 for motor mounting part dimensions and list of attachments.

Dimensions Motor right bottom mounting

● ETV-22-*****-T

· Refer to page 394 for grease nipple dimensions.

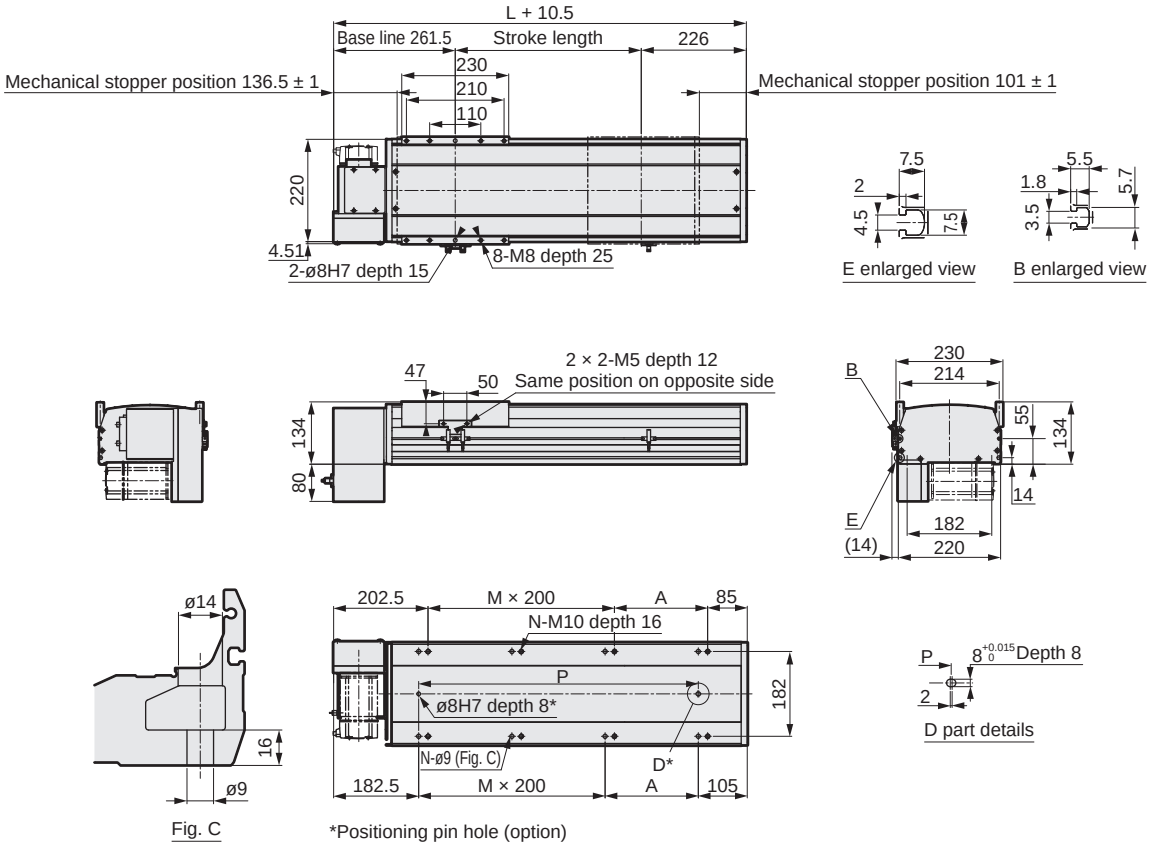

Stroke length (mm)	100	150	200	250	300	350	400	450	500	550	600	650	700	750	800	850	900	950	1000	1050	1100	1150	1200
L	577	627	677	727	777	827	877	927	977	1027	1077	1127	1177	1227	1277	1327	1377	1427	1477	1527	1577	1627	1677
A	100	150	200	50	100	150	200	50	100	150	200	50	100	150	200	50	100	150	200	50	100	150	200
M	1	1	1	2	2	2	2	3	3	3	3	4	4	4	4	5	5	5	5	6	6	6	6
N	6	6	6	8	8	8	8	10	10	10	10	12	12	12	12	14	14	14	14	16	16	16	16
P	300	350	400	450	500	550	600	650	700	750	800	850	900	950	1000	1050	1100	1150	1200	1250	1300	1350	1400
Weight (kg)	30.0	31.2	32.4	33.6	34.8	36.0	37.2	38.4	39.6	40.8	42.0	43.2	44.4	45.6	46.8	48.0	49.2	50.4	51.6	52.8	54.0	55.2	56.4

Stroke length (mm)	1250	1300	1350	1400	1450	1500	1550	1600	1650	1700	1750	1800	1850	1900	1950	2000	2050	2100	2150	2200	2250	2300	2350
L	1727	1777	1827	1877	1927	1977	2027	2077	2127	2177	2227	2277	2327	2377	2427	2477	2527	2577	2627	2677	2727	2777	2827
A	50	100	150	200	50	100	150	200	50	100	150	200	50	100	150	200	50	100	150	200	50	100	150
M	7	7	7	7	8	8	8	8	9	9	9	9	10	10	10	10	11	11	11	11	12	12	12
N	18	18	18	18	20	20	20	20	22	22	22	22	24	24	24	24	26	26	26	26	28	28	28
P	1450	1500	1550	1600	1650	1700	1750	1800	1850	1900	1950	2000	2050	2100	2150	2200	2250	2300	2350	2400	2450	2500	2550
Weight (kg)	57.6	58.8	60.0	61.2	62.4	63.6	64.8	66.0	67.2	68.4	69.6	70.8	72.0	73.2	74.4	75.6	76.8	78.0	79.2	80.4	81.6	82.8	84.0

Stroke length (mm)	2400	2450	2500	2550	2600	2650	2700	2750	2800	2850	2900	2950	3000	3050	3100	3150	3200	3250	3300	3350	3400	3450	3500
L	2877	2927	2977	3027	3077	3127	3177	3227	3277	3327	3377	3427	3477	3527	3577	3627	3677	3727	3777	3827	3877	3927	3977
A	200	50	100	150	200	50	100	150	200	50	100	150	200	50	100	150	200	50	100	150	200	50	100
M	12	13	13	13	13	14	14	14	14	15	15	15	15	16	16	16	16	17	17	17	17	18	18
N	28	30	30	30	30	32	32	32	32	34	34	34	34	36	36	36	36	38	38	38	38	40	40
P	2600	2650	2700	2750	2800	2850	2900	2950	3000	3050	3100	3150	3200	3250	3300	3350	3400	3450	3500	3550	3600	3650	3700
Weight (kg)	85.2	86.4	87.6	88.8	90.0	91.2	92.4	93.6	94.8	96.0	97.2	98.4	99.6	100.8	102.0	103.2	104.4	105.6	106.8	108.0	109.2	110.4	111.6

*Refer to page 387 for motor mounting part dimensions and list of attachments.

Dimensions Motor left-side mounting

● ETV-22-*****-L

· Refer to page 394 for grease nipple dimensions.

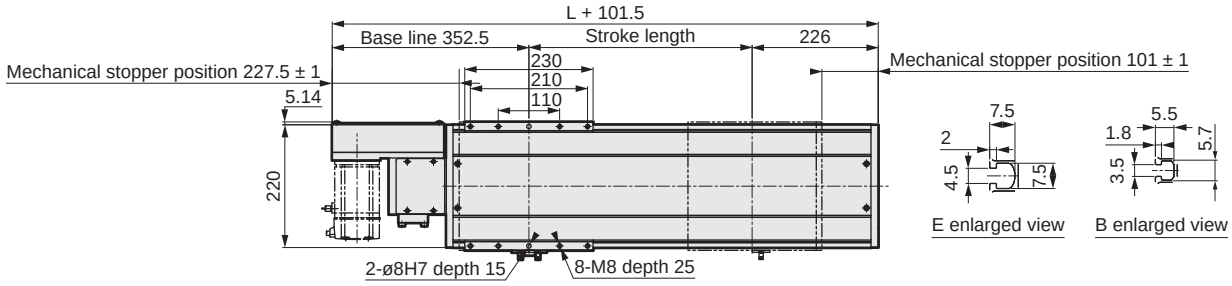

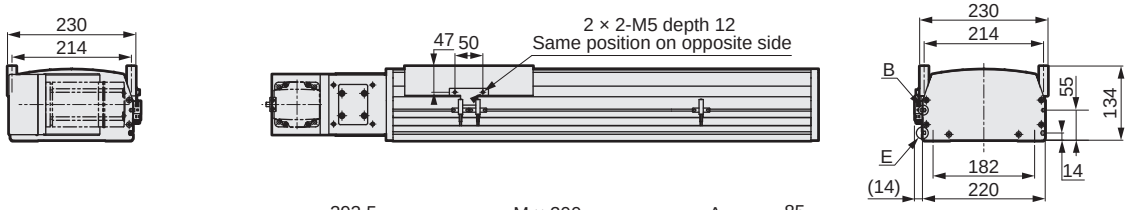

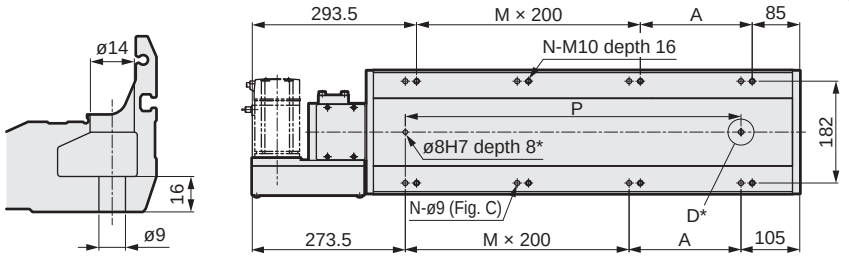

*Positioning pin hole (option)

Stroke length (mm)	100	150	200	250	300	350	400	450	500	550	600	650	700	750	800	850	900	950	1000	1050	1100	1150	1200
L	577	627	677	727	777	827	877	927	977	1027	1077	1127	1177	1227	1277	1327	1377	1427	1477	1527	1577	1627	1677
A	100	150	200	50	100	150	200	50	100	150	200	50	100	150	200	50	100	150	200	50	100	150	200
M	1	1	1	2	2	2	2	3	3	3	3	4	4	4	4	5	5	5	5	6	6	6	6
N	6	6	6	8	8	8	8	10	10	10	10	12	12	12	12	14	14	14	14	16	16	16	16
P	300	350	400	450	500	550	600	650	700	750	800	850	900	950	1000	1050	1100	1150	1200	1250	1300	1350	1400
Weight (kg)	30.0	31.2	32.4	33.6	34.8	36.0	37.2	38.4	39.6	40.8	42.0	43.2	44.4	45.6	46.8	48.0	49.2	50.4	51.6	52.8	54.0	55.2	56.4

Stroke length (mm)	1250	1300	1350	1400	1450	1500	1550	1600	1650	1700	1750	1800	1850	1900	1950	2000	2050	2100	2150	2200	2250	2300	2350
L	1727	1777	1827	1877	1927	1977	2027	2077	2127	2177	2227	2277	2327	2377	2427	2477	2527	2577	2627	2677	2727	2777	2827
A	50	100	150	200	50	100	150	200	50	100	150	200	50	100	150	200	50	100	150	200	50	100	150
M	7	7	7	7	8	8	8	8	9	9	9	9	10	10	10	10	11	11	11	11	12	12	12
N	18	18	18	18	20	20	20	20	22	22	22	22	24	24	24	24	26	26	26	26	28	28	28
P	1450	1500	1550	1600	1650	1700	1750	1800	1850	1900	1950	2000	2050	2100	2150	2200	2250	2300	2350	2400	2450	2500	2550
Weight (kg)	57.6	58.8	60.0	61.2	62.4	63.6	64.8	66.0	67.2	68.4	69.6	70.8	72.0	73.2	74.4	75.6	76.8	78.0	79.2	80.4	81.6	82.8	84.0

Stroke length (mm)	2400	2450	2500	2550	2600	2650	2700	2750	2800	2850	2900	2950	3000	3050	3100	3150	3200	3250	3300	3350	3400	3450	3500
L	2877	2927	2977	3027	3077	3127	3177	3227	3277	3327	3377	3427	3477	3527	3577	3627	3677	3727	3777	3827	3877	3927	3977
A	200	50	100	150	200	50	100	150	200	50	100	150	200	50	100	150	200	50	100	150	200	50	100
M	12	13	13	13	13	14	14	14	14	15	15	15	15	16	16	16	16	17	17	17	17	18	18
N	28	30	30	30	30	32	32	32	32	34	34	34	34	36	36	36	36	38	38	38	38	40	40
P	2600	2650	2700	2750	2800	2850	2900	2950	3000	3050	3100	3150	3200	3250	3300	3350	3400	3450	3500	3550	3600	3650	3700
Weight (kg)	85.2	86.4	87.6	88.8	90.0	91.2	92.4	93.6	94.8	96.0	97.2	98.4	99.6	100.8	102.0	103.2	104.4	105.6	106.8	108.0	109.2	110.4	111.6

*Refer to page 387 for motor mounting part dimensions and list of attachments.

Dimensions Motor left top mounting

● ETV-22-*****-V

· Refer to page 394 for grease nipple dimensions.

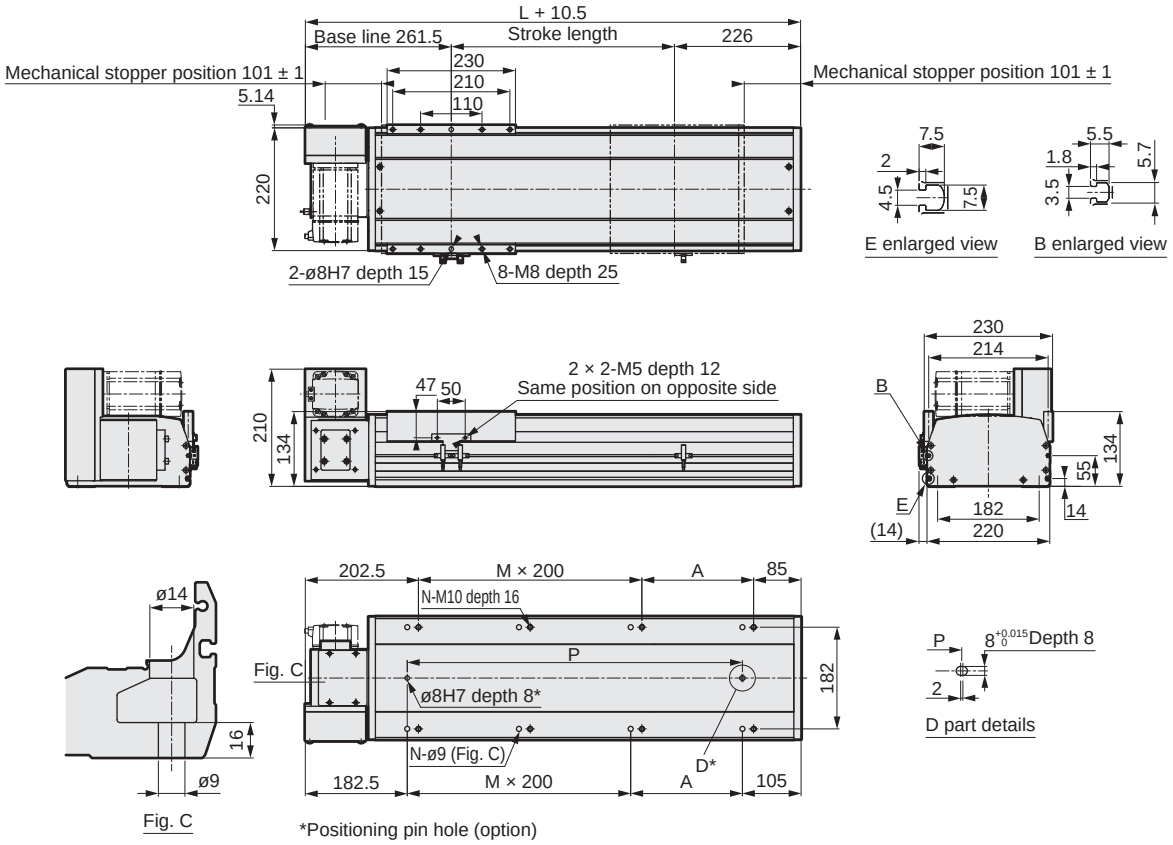

*Positioning pin hole (option)

Stroke length (mm)	100	150	200	250	300	350	400	450	500	550	600	650	700	750	800	850	900	950	1000	1050	1100	1150	1200
L	577	627	677	727	777	827	877	927	977	1027	1077	1127	1177	1227	1277	1327	1377	1427	1477	1527	1577	1627	1677
A	100	150	200	50	100	150	200	50	100	150	200	50	100	150	200	50	100	150	200	50	100	150	200
M	1	1	1	2	2	2	2	3	3	3	3	4	4	4	4	5	5	5	5	6	6	6	6
N	6	6	6	8	8	8	8	10	10	10	10	12	12	12	12	14	14	14	14	16	16	16	16
P	300	350	400	450	500	550	600	650	700	750	800	850	900	950	1000	1050	1100	1150	1200	1250	1300	1350	1400
Weight (kg)	30.0	31.2	32.4	33.6	34.8	36.0	37.2	38.4	39.6	40.8	42.0	43.2	44.4	45.6	46.8	48.0	49.2	50.4	51.6	52.8	54.0	55.2	56.4

Stroke length (mm)	1250	1300	1350	1400	1450	1500	1550	1600	1650	1700	1750	1800	1850	1900	1950	2000	2050	2100	2150	2200	2250	2300	2350
L	1727	1777	1827	1877	1927	1977	2027	2077	2127	2177	2227	2277	2327	2377	2427	2477	2527	2577	2627	2677	2727	2777	2827
A	50	100	150	200	50	100	150	200	50	100	150	200	50	100	150	200	50	100	150	200	50	100	150
M	7	7	7	7	8	8	8	8	9	9	9	9	10	10	10	10	11	11	11	11	12	12	12
N	18	18	18	18	20	20	20	20	22	22	22	22	24	24	24	24	26	26	26	26	28	28	28
P	1450	1500	1550	1600	1650	1700	1750	1800	1850	1900	1950	2000	2050	2100	2150	2200	2250	2300	2350	2400	2450	2500	2550
Weight (kg)	57.6	58.8	60.0	61.2	62.4	63.6	64.8	66.0	67.2	68.4	69.6	70.8	72.0	73.2	74.4	75.6	76.8	78.0	79.2	80.4	81.6	82.8	84.0

Stroke length (mm)	2400	2450	2500	2550	2600	2650	2700	2750	2800	2850	2900	2950	3000	3050	3100	3150	3200	3250	3300	3350	3400	3450	3500
L	2877	2927	2977	3027	3077	3127	3177	3227	3277	3327	3377	3427	3477	3527	3577	3627	3677	3727	3777	3827	3877	3927	3977
A	200	50	100	150	200	50	100	150	200	50	100	150	200	50	100	150	200	50	100	150	200	50	100
M	12	13	13	13	13	14	14	14	14	15	15	15	15	16	16	16	16	17	17	17	17	18	18
N	28	30	30	30	30	32	32	32	32	34	34	34	34	36	36	36	36	38	38	38	38	40	40
P	2600	2650	2700	2750	2800	2850	2900	2950	3000	3050	3100	3150	3200	3250	3300	3350	3400	3450	3500	3550	3600	3650	3700
Weight (kg)	85.2	86.4	87.6	88.8	90.0	91.2	92.4	93.6	94.8	96.0	97.2	98.4	99.6	100.8	102.0	103.2	104.4	105.6	106.8	108.0	109.2	110.4	111.6

*Refer to page 387 for motor mounting part dimensions and list of attachments.

Dimensions Motor left bottom mounting

● ETV-22-*****-W

· Refer to page 394 for grease nipple dimensions.

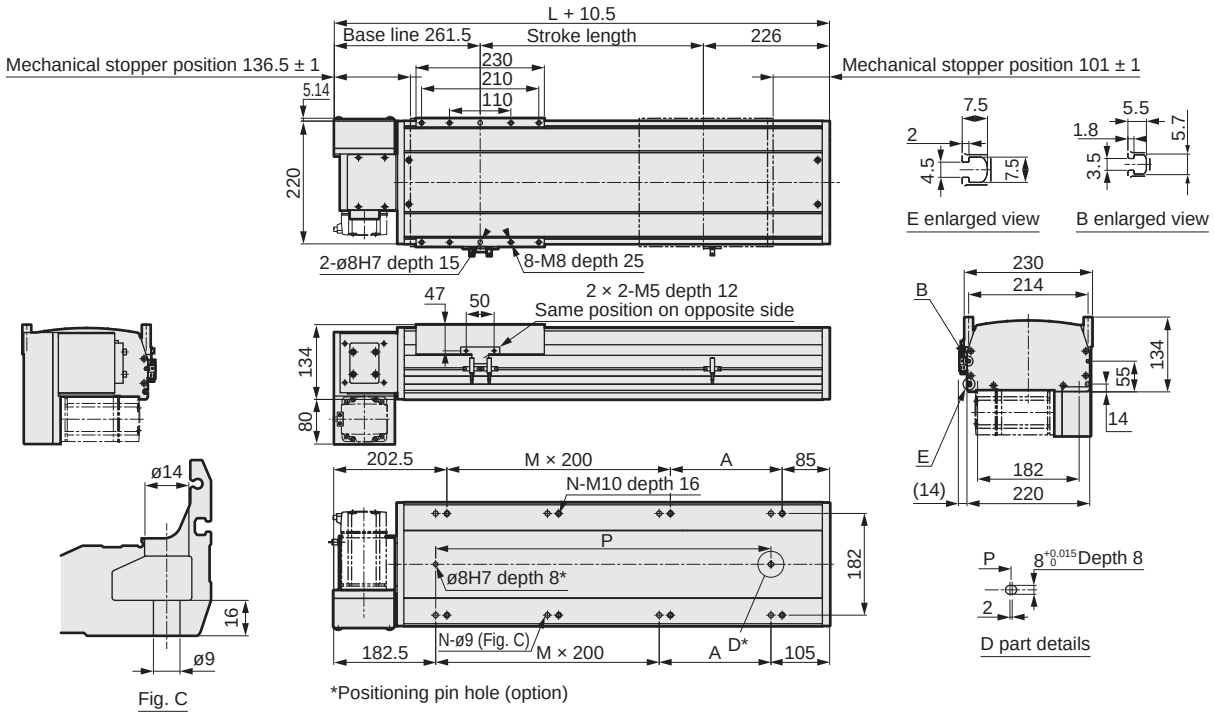

Stroke length (mm)	100	150	200	250	300	350	400	450	500	550	600	650	700	750	800	850	900	950	1000	1050	1100	1150	1200
L	577	627	677	727	777	827	877	927	977	1027	1077	1127	1177	1227	1277	1327	1377	1427	1477	1527	1577	1627	1677
A	100	150	200	50	100	150	200	50	100	150	200	50	100	150	200	50	100	150	200	50	100	150	200
M	1	1	1	2	2	2	2	3	3	3	3	4	4	4	4	5	5	5	5	6	6	6	6
N	6	6	6	8	8	8	8	10	10	10	10	12	12	12	12	14	14	14	14	16	16	16	16
P	300	350	400	450	500	550	600	650	700	750	800	850	900	950	1000	1050	1100	1150	1200	1250	1300	1350	1400
Weight (kg)	30.0	31.2	32.4	33.6	34.8	36.0	37.2	38.4	39.6	40.8	42.0	43.2	44.4	45.6	46.8	48.0	49.2	50.4	51.6	52.8	54.0	55.2	56.4

Stroke length (mm)	1250	1300	1350	1400	1450	1500	1550	1600	1650	1700	1750	1800	1850	1900	1950	2000	2050	2100	2150	2200	2250	2300	2350
L	1727	1777	1827	1877	1927	1977	2027	2077	2127	2177	2227	2277	2327	2377	2427	2477	2527	2577	2627	2677	2727	2777	2827
A	50	100	150	200	50	100	150	200	50	100	150	200	50	100	150	200	50	100	150	200	50	100	150
M	7	7	7	7	8	8	8	8	9	9	9	9	10	10	10	10	11	11	11	11	12	12	12
N	18	18	18	18	20	20	20	20	22	22	22	22	24	24	24	24	26	26	26	26	28	28	28
P	1450	1500	1550	1600	1650	1700	1750	1800	1850	1900	1950	2000	2050	2100	2150	2200	2250	2300	2350	2400	2450	2500	2550
Weight (kg)	57.6	58.8	60.0	61.2	62.4	63.6	64.8	66.0	67.2	68.4	69.6	70.8	72.0	73.2	74.4	75.6	76.8	78.0	79.2	80.4	81.6	82.8	84.0

Stroke length (mm)	2400	2450	2500	2550	2600	2650	2700	2750	2800	2850	2900	2950	3000	3050	3100	3150	3200	3250	3300	3350	3400	3450	3500
L	2877	2927	2977	3027	3077	3127	3177	3227	3277	3327	3377	3427	3477	3527	3577	3627	3677	3727	3777	3827	3877	3927	3977
A	200	50	100	150	200	50	100	150	200	50	100	150	200	50	100	150	200	50	100	150	200	50	100
M	12	13	13	13	13	14	14	14	14	15	15	15	15	16	16	16	16	17	17	17	17	18	18
N	28	30	30	30	30	32	32	32	32	34	34	34	34	36	36	36	36	38	38	38	38	40	40
P	2600	2650	2700	2750	2800	2850	2900	2950	3000	3050	3100	3150	3200	3250	3300	3350	3400	3450	3500	3550	3600	3650	3700
Weight (kg)	85.2	86.4	87.6	88.8	90.0	91.2	92.4	93.6	94.8	96.0	97.2	98.4	99.6	100.8	102.0	103.2	104.4	105.6	106.8	108.0	109.2	110.4	111.6

*Refer to page 387 for motor mounting part dimensions and list of attachments.

Motor mounting part

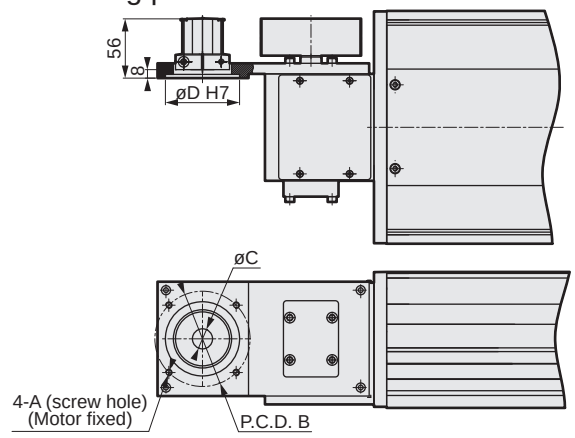

Mounted motor specification		A	B	C	D	Motor mounting bolt
M	750 W	M6	ø90	ø19	ø70	4-M6 × L20
Y	750 W	M6	ø90	ø19	ø70	4-M6 × L20
P	750 W	M5	ø90	ø19	ø70	4-M5 × L20
F	750 W	M6	ø100	ø14	ø80	4-M6 × L20

List of attachments

[Motor mounting parts]

Mounted motor specification	Timing belt, pulley	Motor capacity	Motor mounting bolt	
			Size	Quantity
M	Included at shipment	750 W	M6	4
Y			M6	4
P			M5	4
F			M6	4

[Origin sensor/Limit sensor]

Manufacturer	Model	Quantity
OMRON Corporation	EE-SX672	3

*Refer to page 392 for sensor specifications.

MEMO

Model selection

STEP 1 Confirming load capacity

Load capacity varies with mounting orientation and screw lead.
Refer to the selection table (page 344) and the specification table for each model to select the size and lead.

STEP 2 Confirming positioning time

Calculate the positioning time of the selected product according to the following example and confirm that the required tact is achievable.
Select the speed and acceleration/deceleration from the specification table for each model and the motor selected by the customer.

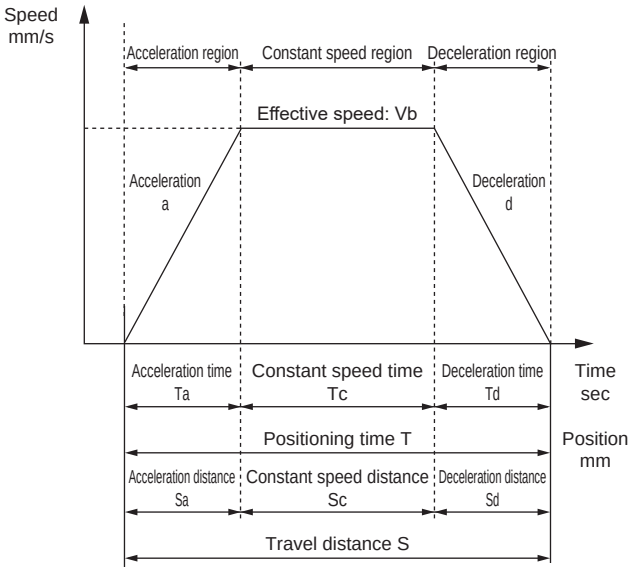

	Description	Code	Unit	Remarks
Set value	Set speed	V	mm/s	
	Set acceleration	a	mm/s^2	
	Set deceleration	d	mm/s^2	
	Travel distance	S	mm	
Calculated value	Achieved speed	Vmax	mm/s	$= \{2 \times a \times d \times S/(a + d)\}^{1/2}$
	Effective speed	Vb	mm/s	Smaller of V and Vmax
	Acceleration time	Ta	s	= Vb/a [0.4 sec or more]
	Deceleration time	Td	s	= Vb/d [0.4 sec or more]
	Constant speed time	Tc	s	= Sc/Vb
	Acceleration distance	Sa	mm	$= (a \times Ta^2)/2$
	Deceleration distance	Sd	mm	$= (d \times Td^2)/2$
	Constant speed distance	Sc	mm	= S - (Sa + Sd)
	Positioning time	T	s	= Ta + Tc + Td

*Do not use at speeds that exceed the specifications.
*Acceleration/deceleration setting by acceleration/deceleration time varies with set speed and stroke length.
*Depending on acceleration/deceleration and stroke length, the trapezoid speed waveform may not be formed (the set speed may not be achieved). In this case, select the effective speed (Vb) from the set speed (V) and the achieved speed (Vmax), whichever is smaller.
*Use with acceleration time/deceleration time of 0.4 sec or longer.
*1 G ≈ 9.8 m/s^2.

STEP 3 Confirming allowable overhang length

Make sure that the load overhang length during operation is within the allowable range (pages 390 to 391).

For selection details, confirm with the CKD online model selection system, or contact CKD.

Introducing the online model selection system

[For confirmation via PC]

(https://www.ckd.co.jp/kiki/en/selection_system/)

[For confirmation via iPad or smartphone]

*Depending on your smartphone environment, it may not be displayed correctly.

MEMO

Allowable overhang length (ETV Series)

[When installed horizontally]

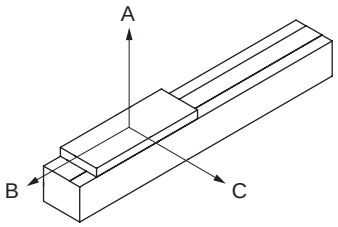

[Allowable overhang length]

● ETV-05

Motor mounted	Acceleration/deceleration time sec	Screw lead equivalent	Weight kg	Overhang mm		
				A	B	C
Left/Right/ Bottom	0.4	40	3	55	20	30

● ETV-14

Motor mounted	Acceleration/deceleration time sec	Screw lead equivalent	Weight kg	Overhang mm		
				A	B	C
Left/Right/ Bottom	0.4	40	10	1800	700	550
			20	880	330	260
			25	700	260	200

● ETV-06

Motor mounted	Acceleration/deceleration time sec	Screw lead equivalent	Weight kg	Overhang mm		
				A	B	C
Left/Right/ Bottom	0.4	40	3	210	60	110

● ETV-17

Motor mounted	Acceleration/deceleration time sec	Screw lead equivalent	Weight kg	Overhang mm		
				A	B	C
Left/Right/ Bottom	0.4	40	10	3000	1250	1150
			20	1600	600	550
			30	1050	400	360
			45	650	250	230

● ETV-10

Motor mounted	Acceleration/deceleration time sec	Screw lead equivalent	Weight kg	Overhang mm		
				A	B	C
Left/Right/ Bottom	0.4	32	5	550	160	140
			8	330	100	85
			10	260	80	65

● ETV-22

Motor mounted	Acceleration/deceleration time sec	Screw lead equivalent	Weight kg	Overhang mm		
				A	B	C
Left/Right/ Bottom	0.4	40	45	1700	650	470
			65	1150	420	310
			85	850	310	225

*When suspending from above, use 1/3 of the static allowable moment, dynamic allowable load, dynamic allowable moment, and overhang length.
Use overhang length up to the center of gravity of the load within A, B and C directions.

Allowable overhang length (ETV Series)

[When wall-mounted]

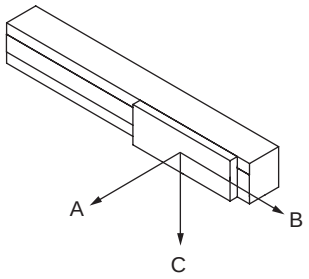

[Allowable overhang length]

● ETV-05

Motor mounted	Acceleration/deceleration time sec	Screw lead equivalent	Weight kg	Overhang mm		
				A	B	C
Left/Right/ Bottom	0.4	40	3	29	21	57

● ETV-14

Motor mounted	Acceleration/deceleration time sec	Screw lead equivalent	Weight kg	Overhang mm		
				A	B	C
Left/Right/ Bottom	0.4	40	10	540	690	1800
			20	260	330	860
			25	200	255	680

● ETV-06

Motor mounted	Acceleration/deceleration time sec	Screw lead equivalent	Weight kg	Overhang mm		
				A	B	C
Left/Right/ Bottom	0.4	40	3	120	80	220

● ETV-17

Motor mounted	Acceleration/deceleration time sec	Screw lead equivalent	Weight kg	Overhang mm		
				A	B	C
Left/Right/ Bottom	0.4	40	10	1150	1250	2700
			20	550	600	1550
			30	350	390	1000
			45	220	230	630

● ETV-10

Motor mounted	Acceleration/deceleration time sec	Screw lead equivalent	Weight kg	Overhang mm		
				A	B	C
Left/Right/ Bottom	0.4	32	5	140	160	520
			8	85	100	320
			10	65	75	250

● ETV-22

Motor mounted	Acceleration/deceleration time sec	Screw lead equivalent	Weight kg	Overhang mm		
				A	B	C
Left/Right/ Bottom	0.4	40	45	480	650	1700
			65	320	430	1150
			85	230	320	850

*When suspending from above, use 1/3 of the static allowable moment, dynamic allowable load, dynamic allowable moment, and overhang length.
Use overhang length up to the center of gravity of the load within A, B and C directions.

Sensor specifications

Manufacturer	Model	Quantity
OMRON Corporation	EE-SX672	3

Performance

Item	Specifications
Hysteresis	0.025 mm or less
Light source (peak emission wavelength)	GaAs infrared LED (940 nm)
Indicator lamp	ON when receiving light (red)
Power supply voltage	5 to 24 VDC ±10% ripple (P-P) 10% or less
Current consumption	35 mA or less (NPN)
Control output	NPN: NPN open collector output 5 to 24 VDC 100 mA or less OFF state current 0.5 mA or less Residual voltage 0.8 V or less (at load current 100 mA) Residual voltage 0.4 V or less (at load current 40 mA)
Operating ambient illumination	Light-receiving surface luminance Fluorescent light: 1,000 lx or less
Ambient temperature range	When operating: -25 to +55°C When stored: -30 to +80°C (no condensation or freezing)
Ambient humidity range	When operating: 5 to 85% RH When stored: 5 to 95% RH (no condensation or freezing)
Degree of protection	IP50 IEC 60529 Standards
Cord length	2 m (Connector with cord [EE-1006 2M])

Output circuit

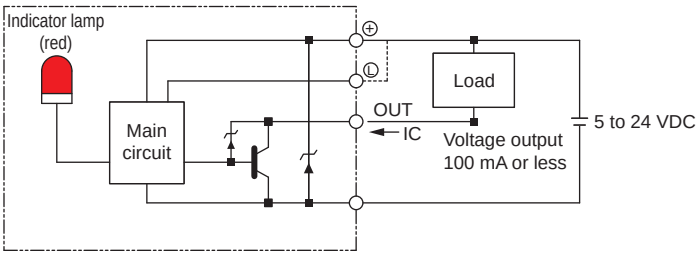

Wiring diagram

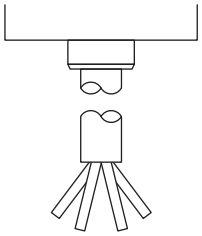

Terminal layout

Brown	5 to 24 VDC
Pink	L
Blue	0 V
Black	OUTPUT

Sensor dog dimensions

	Motor mounting direction
Body size	U/D
ETV-05	Fig. 1
ETV-06	Fig. 2

Fig. 1

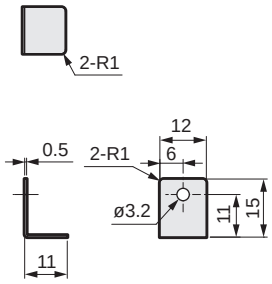

Fig. 2

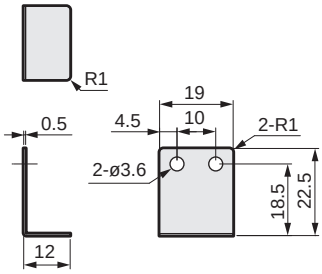

	Motor mounting direction
Body size	R/S/T/L/V/W
ETV-10	Fig. 3
ETV-14	Fig. 4
ETV-17	Fig. 4
ETV-22	Fig. 5

Fig. 3

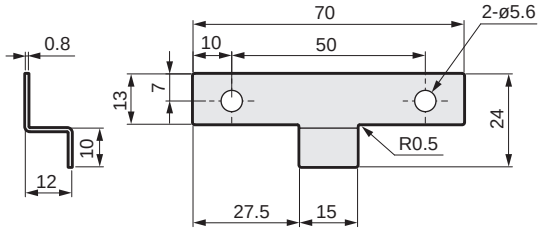

Fig. 4

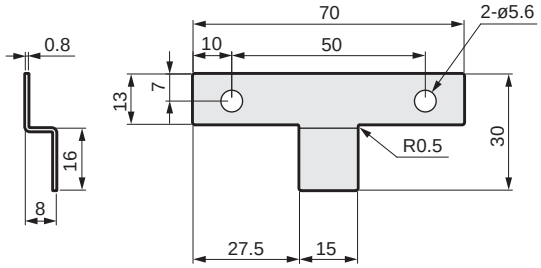

Fig. 5

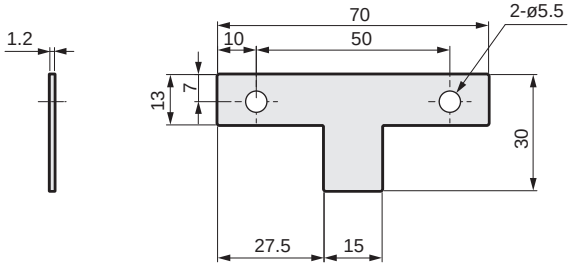

Grease nipple dimensions

*Horizontally symmetrical against the actuator.

● ETV-10

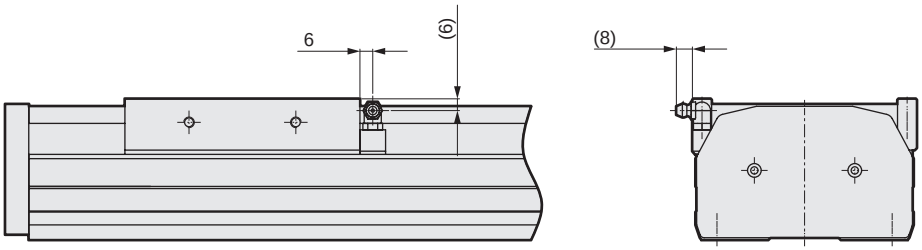

● ETV-14

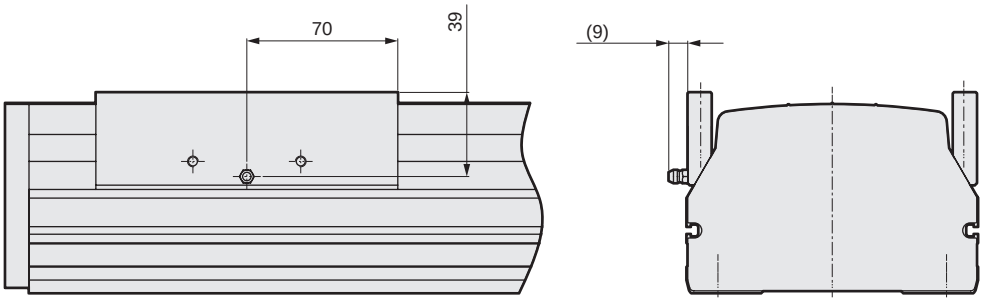

● ETV-17

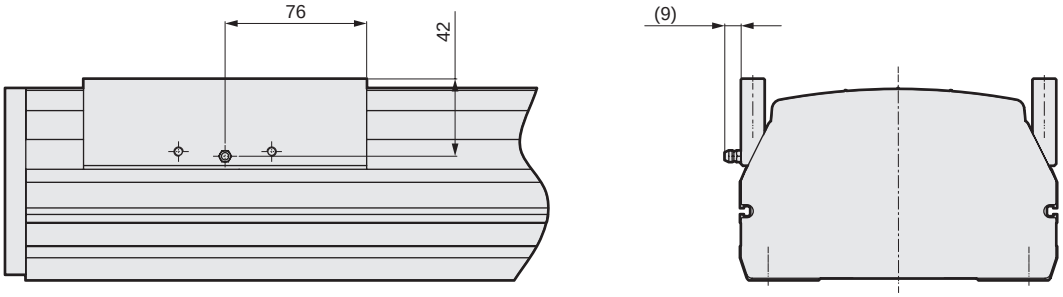

● ETV-22

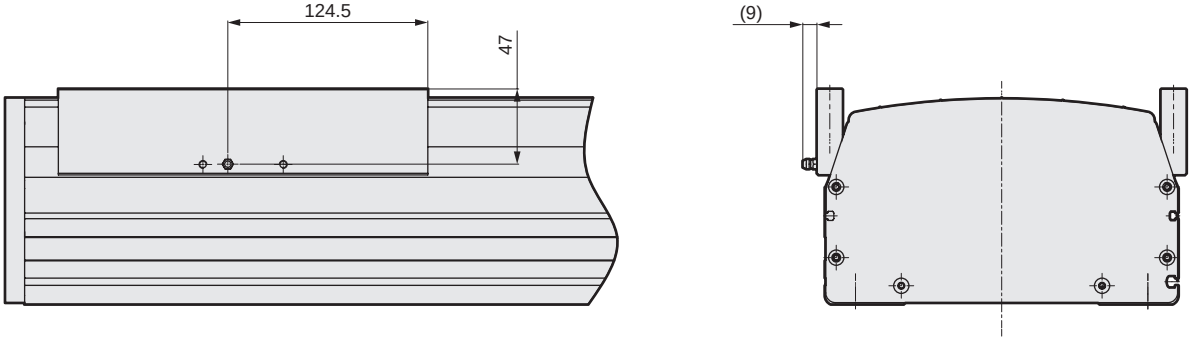

MEMO

List of attachments

Basic

Motor mounting bolt (common motor mounting direction)

Model No.	Mounted motor specification	Motor capacity	Size	Quantity
ETV-05 ETV-06 ETV-10	M	100 W	M4	2
	Y		M4	2
	P		M3	4
	F		M4	2
ETV-14	M	200 W	M5	4
	Y		M5	4
	P		M4	4
	F		M5	4
ETV-17	M	400 W	M5	4
	Y		M5	4
	P		M4	4
	F		M5	4
ETV-22	M	750 W	M6	4
	Y		M6	4
	P		M5	4
	F		M6	4

By motor mounting direction

Attachment name	Attachment quantity
Timing belt	1
Pulley	1

When origin/limit sensor is selected

Sensor mounting direction	Shipping format	Quantity
Outer sensor	Included at shipment *1	3 *2

*1 When "None" is selected for origin sensor or limit sensor, the other sensor is also "None".
*2 Sensor mounting screws are also included.

Maintenance parts

● Maintenance parts set

Model No.	Compatibility	Components				
		(1)	(2)	(3)	(4)	(5)
		Timing belt 	Pulley 	Sensor dog 	Photoelectric bracket 	Bearing 
ETV-08JP002-0014	ETV-05	-	○ (1 pc)	○ (1 pc)	-	○ (1 pc)
ETV-08JP002-0015	ETV-06	-	○ (1 pc)	○ (1 pc)	-	○ (1 pc)
ETV-08JP002-0024	ETV-10	○ (1 pc)	○ (1 pc)	○ (1 pc)	○ (4 pcs)	-
ETV-08JP002-0025	ETV-14	○ (1 pc)	○ (3 pcs)	○ (1 pc)	-	-
ETV-08JP002-0026	ETV-17	○ (1 pc)	○ (1 pc)	○ (1 pc)	-	-
ETV-08JP002-0019	ETV-22	○ (2 pcs)	○ (2 pcs)	○ (1 pc)	-	-

● Maintenance parts (outside mounted sensor)

Model No. 	Compatibility	Part
ETS-22008-000001	All models	Body
ETS-22008-000006		Cable

Safety precautions

Stepper motor compatible				Servo motor compatible							
ECS	ETS	EBR	EBS	EKS	ECV	ETV	ECS	ETS Multi-Axis	ETS	EBR	EBS

ECV

Slider (belt drive/low dust specifications)

Servo motor compatible electric actuator
Motorless specification

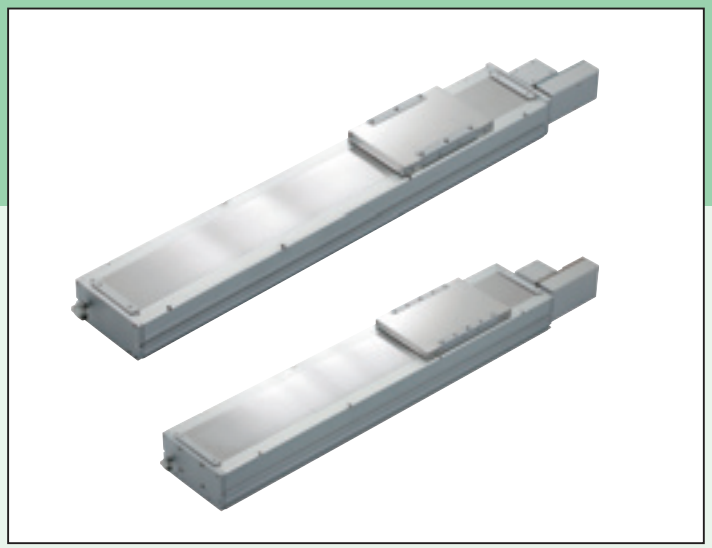

CONTENTS

Product introduction	Intro Pages
Series variation	400
● Specifications/How to order/Dimensions	
· ECV-05	404
· ECV-06	408
· ECV-10	412
· ECV-14	420
· ECV-17	428
· ECV-22	436
● Model selection	444
● Technical data	446
⚠ Safety precautions	686
Model Selection Check Sheet	708

Series variation

Type	Model No.	Applicable motor capacity (W)	Body width (mm)	Lead equivalent (mm)	Max. load capacity (kg) Horizontal *1	Max. load capacity (kg) Vertical	Stroke length (mm) and max. speed (mm/s) *2	Page
Low dust belt type	 ECV-05	100	50	40	3	—	100 / 300 / 600: 2000 mm/s; 800: Max. st: 800 mm, 0.8 sec. *3	404
	 ECV-06	100	65	40	3	—	100 / 300 / 600: 2000; 800: Max. st: 800 mm, 0.8 sec.	408
	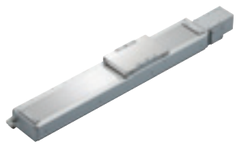 ECV-10	100	102	32	10	—	100 / 300 / 600: 1600; 2550: Max. st: 2550 mm, 1.99 sec.	412
	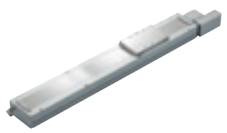 ECV-14	200	135	40	25	—	100 / 300 / 600: 2000; 3050: Max. st: 3050 mm, 1.93 sec.	420
	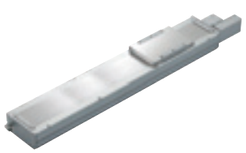 ECV-17	400	170	40	45	—	100 / 300 / 600: 2000; 3500: Max. st: 3500 mm, 2.15 sec.	428
	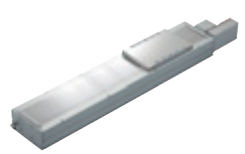 ECV-22	750	220	40	85	—	100 / 300 / 600: 2000; 3400: Max. st: 3400 mm, 2.1 sec.	436

*1: The load capacity when wall mounted is the same as for horizontal mounting.
*2: The max. speed is the speed when the motor mounted by the customer can output a rotation speed of 3000 rpm.
*3: ⏱ shows the positioning time. Maximum stroke when installed horizontally and operated at max. speed and max. acceleration/deceleration. Note that this is not the value at maximum load capacity.

How to order

How to order

ECV - 06 - 40 010 - D M 1 X C B D P

Ⓐ Body size *4

05	Body width 50 mm
06	Body width 65 mm
10	Body width 102 mm
14	Body width 135 mm
17	Body width 170 mm
22	Body width 220 mm

Ⓑ Lead equivalent *1

32	32 mm
40	40 mm

Ⓒ Stroke length

010 to 350	100 mm (In 50 mm increments) 3500 mm

Ⓓ Motor mounting direction *2

U	Top mounting
D	Bottom mounting
R	Right mounting
S	Right top mounting
T	Right bottom mounting
L	Left mounting
V	Left top mounting
W	Left bottom mounting

Ⓔ Mounted motor specification

M	Refer to the list on the page at right
Y	
P	
F	

Ⓕ Motor capacity

1	100 W
2	200 W
4	400 W
8	750 W

Ⓖ Driving belt *4

X	Standard (rubber)
L	Low dust generation (urethane)

Ⓗ Origin sensor *3

N	None
C	Outside, motor side (included at shipment)
D	Outside, motor opposite side (included at shipment)

Ⓘ Limit sensor *3

N	None
B	Outside (included at shipment)

Ⓙ Grease nipple

N	None (Body mounting direction: Standard)
D	None (Body mounting direction: Bottom side)
R	Right
L	Left

Ⓚ Positioning pin hole

N	None
P	Yes

*1: Only ETV-10 supports 32 mm.
*2: Only ETV-05 and 06 support U and D.
Other sizes support only R, S, T, L, V and W.
*3: The sensor dog is assembled at shipment regardless of sensor presence.
*4: For body sizes 05 and 06, Belt L cannot be selected.

Manufacturer	50 W	100 W	200 W	400 W	750 W
Mitsubishi Electric Corporation	M	M	M	M	M
Delta Electronics Co., Ltd.	M	M	M	M	M
Sanyo Denki Co., Ltd.	M	M	M	M	-
YASKAWA Electric Corporation	Y	Y	Y	Y	Y
Keyence Corporation	Y	Y	Y	Y	Y
Panasonic Corporation	P	P	P	P	P
OMRON Corporation	M	M	P	P	P
Fuji Electric Co., Ltd.	M	M	M	M	M
FANUC CORPORATION	F	F	F	F	F
Bosch Rexroth AG	P	P	P	P	P
Rockwell Automation, Inc.	M	M	M	M	M
SIEMENS AG	M	M	M	M	M

Example of model No.

ECV-06-40010-DM1XCBDP

Ⓐ Body size : 06 Series
Ⓑ Lead equivalent : 40 mm
Ⓒ Stroke length : 100 mm
Ⓓ Motor mounting direction : Bottom side mounting
Ⓔ Mounted motor specification : M (refer to the table on the page at right)
Ⓕ Motor capacity : 100 W
Ⓖ Driving belt : Standard (rubber)
Ⓗ Origin sensor : External motor side
Ⓘ Limit sensor : Outside
Ⓙ Grease nipple : None (Body mounting method: Bottom side)
Ⓚ Positioning pin hole : Yes

*This product is composed of an actuator (and motor mounting parts) only; there is no motor attached.
The user must prepare, mount, and adjust the motor and driver.

List of servo motors recommended for mounting

Code	Manufacturer	Series	100 W (ECV-05/06/10 Series)
M	Mitsubishi Electric Corporation	MELSERVO J4	HG-KR13
		MELSERVO J5	HK-KT13W
M	Delta Electronics Co., Ltd.	ECMA-C	ECMA-C10401
M	Sanyo Corporation, Ltd.	SANMOTION R	R2□A04010
Y	YASKAWA Electric Corporation	Σ-V	SGMJV-01
		Σ-7	SGM7J-01
Y	Keyence Corporation	SV	SV-□010
		SV2	SV2-□010
P	Panasonic Corporation	MINAS A5	MSMD01
		MINAS A6	MSMF01
M	OMRON Corporation	G5	R88M-K10030
		1S	R88M-1M10030
M	Fuji Electric Co., Ltd.	ALPHA7 GYS	GYS101D7-□B2□
		ALPHA7 GYB	-
F	FANUC CORPORATION	βiS-B	A06B-0112-B1
P	Bosch Rexroth AG	MSM	MSM019B
M	Rockwell Automation, Inc.	TLP	TLP-A046-010-DKA□2
M	SIEMENS AG	1FK2SV2 *1	1FK2102-1AG0

Code	Manufacturer	Series	200 W (ECV-14 Series)	400 W (ECV-17 Series)	750 W (ECV-22 Series)
M	Mitsubishi Electric Corporation	MELSERVO J4	HG-KR23	HG-KR43	HG-KR73
		MELSERVO J5	HK-KT23W	HK-KT43W	HK-KT7M3W
M	Delta Electronics Co., Ltd.	ECMA-C	ECMA-C10602	ECMA-C10604	ECMA-C10807
M	Sanyo Corporation, Ltd.	SANMOTION R	R2□A06020	R2□A06040	-
Y	YASKAWA Electric Corporation	Σ-V	SGMJV-02	SGMJV-04	SGMJV-08
		Σ-7	SGM7J-02	SGM7J-04	SGM7J-08
Y	Keyence Corporation	SV	SV-□020	SV-□040	SV-□075
		SV2	SV2-□020	SV2-□040	SV2-□075
P	Panasonic Corporation	MINAS A5	MSMD02	MSMD04	MSMD08
		MINAS A6	MSMF02	MSMF04	MSMF08
P	OMRON Corporation	G5	R88M-K20030	R88M-K40030	R88M-K75030
		1S	R88M-1M20030	R88M-1M40030	R88M-1M75030
M	Fuji Electric Co., Ltd.	ALPHA7 GYS	GYS201D7-□B2□	GYS401D7-□B2□	GYS751D7-□B2□
		ALPHA7 GYB	GYB201D7-□B2□	GYB401D7-□B2□	GYB751D7-□B2□
F	FANUC CORPORATION	βiS-B	A06B-2115-B1	A06B-2116-B1	A06B-2063-B1
P	Bosch Rexroth AG	MSM	MSM031B	MSM031C	MSM041B
M	Rockwell Automation, Inc.	TLP	TLP-A070-020-DKA□2	TLP-A070-040-DKA□2	TLP-A090-075-DKA□2
M	SIEMENS AG	1FK2 *1	1FK2203-2AG0	1FK2203-4AG0	1FK2204-5AK0

*Contact CKD for mounting other than the above motors and products of other motor manufacturers.
*1: The servo motor is subject to the regulations of Export Trade Control Order Appendix Table 1 Item 7 (8), and is applicable with regard to its specifications. (as of January 2021)

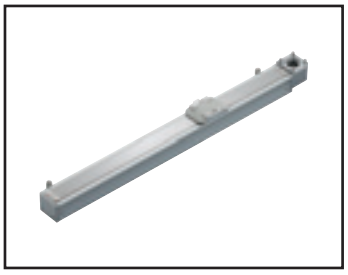

Electric actuator Belt

ECV-05 Series

Motor side mounting (left, right, bottom)

● Servo motor capacity: 100 W

How to order

ECV - 05 - 40 - 010 - U M 1 X N N N N

Ⓐ Body size

05	Body width 50 mm

Ⓑ Lead equivalent

40	40 mm

Ⓒ Stroke length

010 to 080	100 mm (In 50 mm increments) 800 mm

Ⓓ Motor mounting direction

U	Top mounting
D	Bottom mounting

Ⓔ Mounted motor specification

M, Y, P, F	Select the mounted motor specification from the table below.

Ⓕ Motor capacity

1	100 W

Ⓖ Driving belt

X	Standard (rubber)

Ⓗ Origin sensor (1 pc) *1 *2

N	None
C	Outside motor side
D	Outside motor opposite side

Ⓘ Limit sensor (2 pcs) *1 *2

N	None
B	Outside

Ⓙ Grease nipple *3

N	None (Body mounting direction: Standard)

Ⓚ Positioning pin hole

N	None
P	Yes

Manufacturer	100 W
Mitsubishi Electric Corporation	M
Delta Electronics Co., Ltd.	M
Sanyo Denki Co., Ltd.	M
YASKAWA Electric Corporation	Y
Keyence Corporation	Y
Panasonic Corporation	P
OMRON Corporation	M
Fuji Electric Co., Ltd.	M
FANUC CORPORATION	F
Bosch Rexroth AG	P
Rockwell Automation, Inc.	M
SIEMENS AG	M

*Refer to page 403 for the motor model No.

*1: Origin sensor and limit sensor are available as a set. As it is both-or-nothing, select "None" for both.
*2: The user can adjust the sensor position. (Included at shipment)
*3: "Body mounting direction: Standard" here refers to mounting from the bottom side.

Specifications

Applicable motor capacity		100 W servo motor
Drive method		Belt width 9 mm
Stroke length	mm	100 to 800
Lead equivalent	mm	40
Max. load capacity *1	Horizontal kg	3
	Vertical kg	-
Max. speed	mm/s	2000
Rated thrust *1	N	42
Repeatability	mm	±0.08
Lost motion		0.2 mm or less
Dynamic allowable load	N	551.1
Static allowable moment	N·m	MP: 20, MY: 16, MR: 19
Dynamic allowable moment	N·m	MP: 2.8, MY: 2.8, MR: 6.8
Operating ambient temperature, humidity		0 to 40°C (no freezing) 35 to 80% RH (no condensation)
Storage ambient temperature, humidity		-10 to 50°C (no freezing) 35 to 80% RH (no condensation)
Atmosphere		No corrosive gas, explosive gas, or dust

*1: Rated thrust and max. load capacity are guideline values assuming that the motor mounted will output the rated torque.

Stroke and max. speed

(mm/s)

Lead equivalent \ Stroke length	100 to 800
40	2000

*The max. speed is the speed when the motor mounted by the customer can output a rotation speed of 3000 rpm.

Allowable overhang length

*Refer to page 446 for details.

Moment direction

MP MY MR

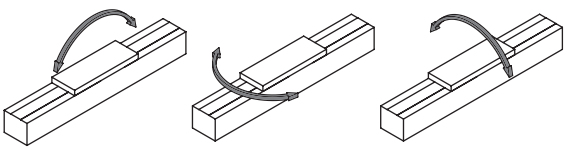

Dimensions Motor top mounting

● ECV-05-*****-U

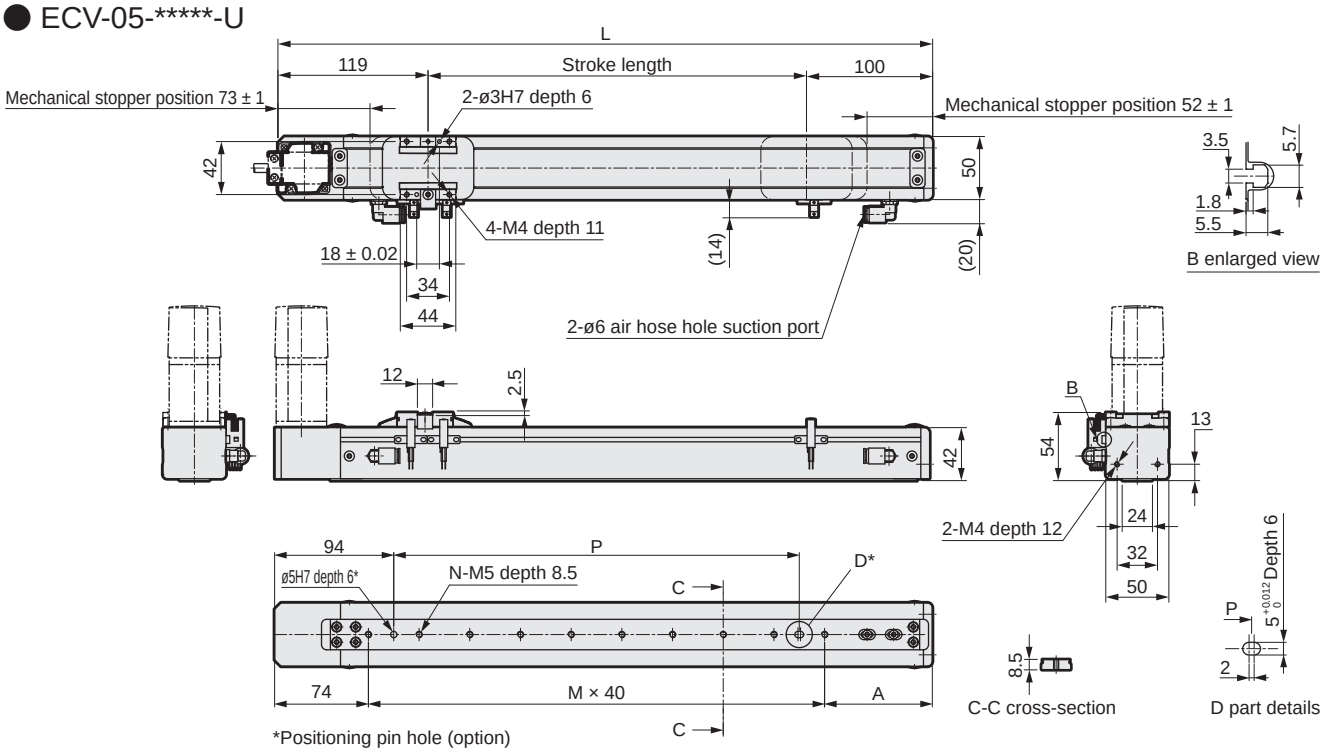

Stroke length (mm)	100	150	200	250	300	350	400	450	500	550	600	650	700	750	800
L	319	369	419	469	519	569	619	669	719	769	819	869	919	969	1019
A	85	95	65	75	85	95	65	75	85	95	65	75	85	95	65
M	4	5	7	8	9	10	12	13	14	15	17	18	19	20	22
N	5	6	8	9	10	11	13	14	15	16	18	19	20	21	23
P	120	160	240	280	320	360	440	480	520	560	640	680	720	760	800
Weight (kg)	2.2	2.3	2.4	2.5	2.6	2.7	2.8	2.9	3.0	3.1	3.2	3.3	3.4	3.5	3.6

Motor mounting part

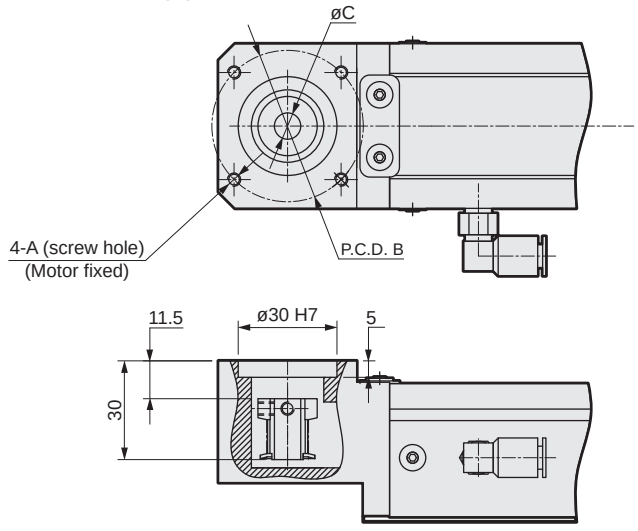

Mounted motor specification		A	B	C	Motor mounting bolt
M	100 W	M4	ø46	ø8	4-M4 × L12
Y	100 W	M4	ø46	ø8	4-M4 × L12
P	100 W	M3	ø45	ø8	4-M3 × L12
F	100 W	M4	ø46	ø8	4-M4 × L12

List of attachments

[Motor mounting parts]

Mounted motor specification	Timing belt, pulley	Fitting	Motor capacity	Motor mounting bolt	
				Size	Quantity
M	Included at shipment	Assembled at shipment	100 W	M4	2
Y				M4	2
P				M3	4
F				M4	2

*Refer to page 452 for fitting details.

[Origin sensor/Limit sensor]

Manufacturer	Model	Quantity
OMRON Corporation	EE-SX672	3

*Refer to page 448 for sensor specifications.

Dimensions Motor bottom mounting

● ECV-05-*****-D

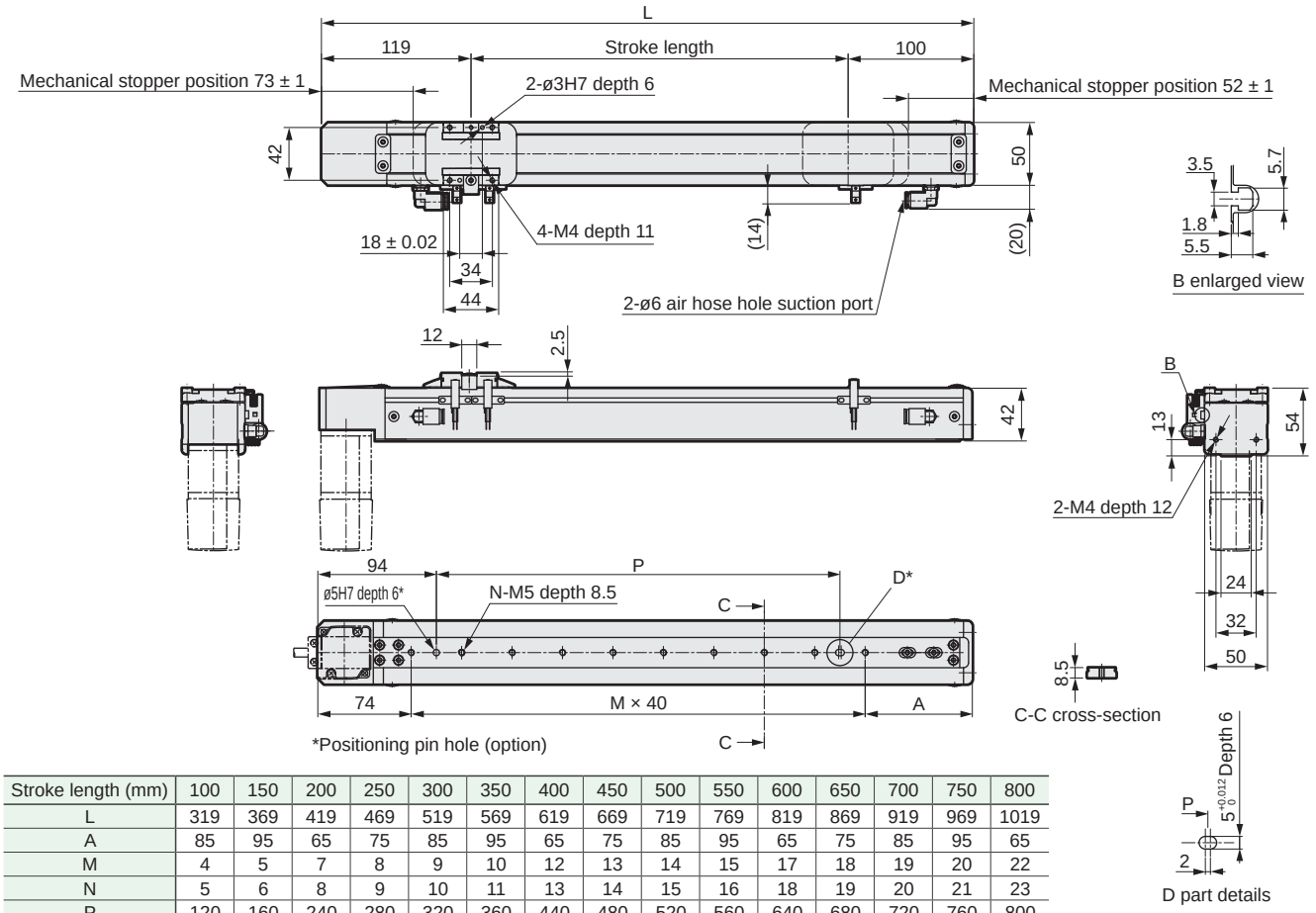

Stroke length (mm)	100	150	200	250	300	350	400	450	500	550	600	650	700	750	800
L	319	369	419	469	519	569	619	669	719	769	819	869	919	969	1019
A	85	95	65	75	85	95	65	75	85	95	65	75	85	95	65
M	4	5	7	8	9	10	12	13	14	15	17	18	19	20	22
N	5	6	8	9	10	11	13	14	15	16	18	19	20	21	23
P	120	160	240	280	320	360	440	480	520	560	640	680	720	760	800
Weight (kg)	2.2	2.3	2.4	2.5	2.6	2.7	2.8	2.9	3.0	3.1	3.2	3.3	3.4	3.5	3.6

Motor mounting part

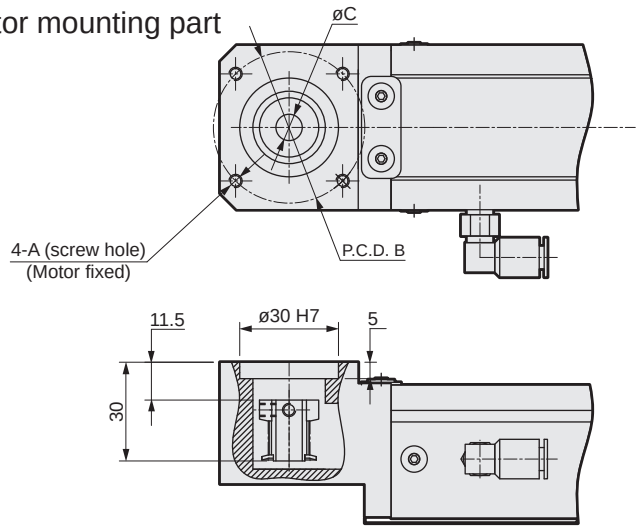

Mounted motor specification		A	B	C	Motor mounting bolt
M	100 W	M4	ø46	ø8	4-M4 × L12
Y	100 W	M4	ø46	ø8	4-M4 × L12
P	100 W	M3	ø45	ø8	4-M3 × L12
F	100 W	M4	ø46	ø8	4-M4 × L12

List of attachments

[Motor mounting parts]

Mounted motor specification	Timing belt, pulley	Fitting	Motor capacity	Motor mounting bolt	
				Size	Quantity
M	Included at shipment	Assembled at shipment	100 W	M4	2
Y				M4	2
P				M3	4
F				M4	2

*Refer to page 452 for fitting details.

[Origin sensor/Limit sensor]

Manufacturer	Model	Quantity
OMRON Corporation	EE-SX672	3

*Refer to page 448 for sensor specifications.

MEMO

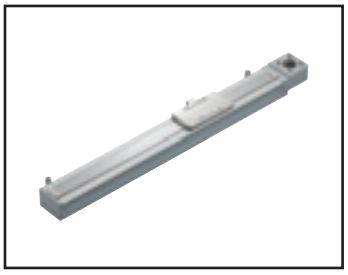

Electric actuator Belt

ECV-06 Series

Motor side mounting (left, right, bottom)

● Servo motor capacity: 100 W

How to order

ECV - 06 - 40 010 - U M 1 X N N N N

Ⓐ 06

Ⓑ 40

Ⓒ 010

Ⓓ U

Ⓔ M

Ⓕ 1

Ⓖ X

Ⓗ N

Ⓘ N

Ⓙ N

Ⓚ N

Ⓐ Body size

06	Body width 65 mm

Ⓑ Lead equivalent

40	40 mm

Ⓒ Stroke length

010 to 080	100 mm (In 50 mm increments) 800 mm

Ⓓ Motor mounting direction

U	Top mounting
D	Bottom mounting

Ⓔ Mounted motor specification

M	Select the mounted motor specification from the table below.
Y	
P	
F	

Ⓕ Motor capacity

1	100 W

Ⓖ Driving belt

X	Standard (rubber)

Ⓗ Origin sensor (1 pc) *1 *2

N	None
C	Outside motor side
D	Outside motor opposite side

Ⓘ Limit sensor (2 pcs) *1 *2

N	None
B	Outside

Ⓙ Grease nipple *3

N	None (Body mounting direction: Standard)

Ⓚ Positioning pin hole

N	None
P	Yes

Manufacturer	100 W
Mitsubishi Electric Corporation	M
Delta Electronics Co., Ltd.	M
Sanyo Denki Co., Ltd.	M
YASKAWA Electric Corporation	Y
Keyence Corporation	Y
Panasonic Corporation	P
OMRON Corporation	M
Fuji Electric Co., Ltd.	M
FANUC CORPORATION	F
Bosch Rexroth AG	P
Rockwell Automation, Inc.	M
SIEMENS AG	M

*Refer to page 403 for the motor model No.

*1: Origin sensor and limit sensor are available as a set. As it is both-or-nothing, select "None" for both.
*2: The user can adjust the sensor position. (Included at shipment)
*3: "Body mounting direction: Standard" here refers to mounting from the bottom side.

Specifications

Applicable motor capacity		100 W servo motor
Drive method		Belt width 12 mm
Stroke length	mm	100 to 800
Lead equivalent	mm	40
Max. load capacity *1	Horizontal kg	3
	Vertical kg	-
Max. speed	mm/s	2000
Rated thrust *1	N	42
Repeatability	mm	±0.08
Lost motion		0.2 mm or less
Dynamic allowable load	N	1209.1
Static allowable moment	N·m	MP: 80, MY: 70, MR: 75
Dynamic allowable moment	N·m	MP: 8.9, MY: 8.9, MR: 24.8
Operating ambient temperature, humidity		0 to 40°C (no freezing) 35 to 80% RH (no condensation)
Storage ambient temperature, humidity		-10 to 50°C (no freezing) 35 to 80% RH (no condensation)
Atmosphere		No corrosive gas, explosive gas, or dust

*1 Rated thrust and max. load capacity are guideline values assuming that the motor mounted will output the rated torque.

Stroke and max. speed

(mm/s)

Lead equivalent \ Stroke length	100 to 800
40	2000

*The max. speed is the speed when the motor mounted by the customer can output a rotation speed of 3000 rpm.

Allowable overhang length

*Refer to page 446 for details.

Moment direction

MP

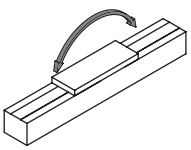

MY

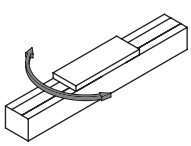

MR

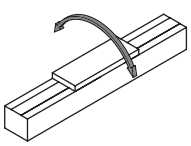

Dimensions Motor top mounting

● ECV-06-*****-U

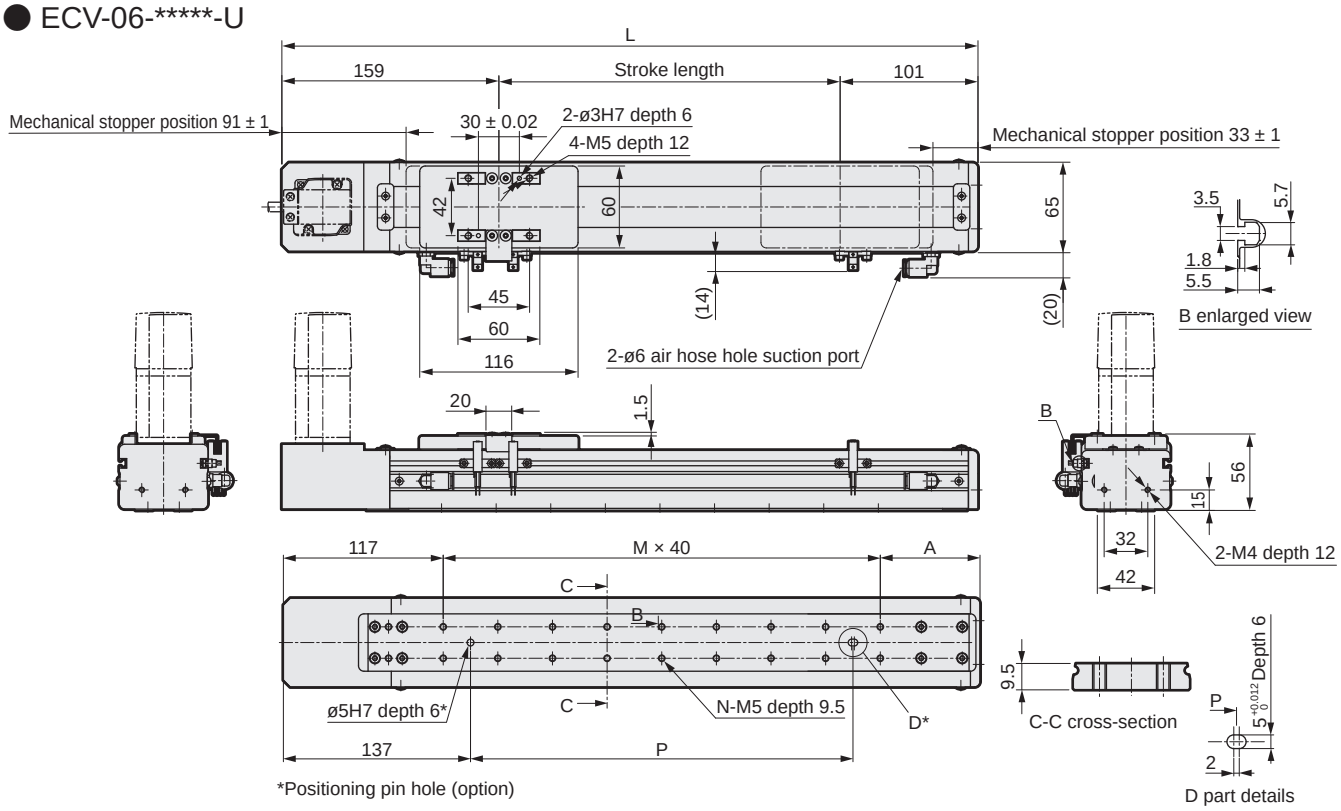

Stroke length (mm)	100	150	200	250	300	350	400	450	500	550	600	650	700	750	800
L	360	410	460	510	560	610	660	710	760	810	860	910	960	1010	1060
A	83	93	63	73	83	93	63	73	83	93	63	73	83	93	63
M	4	5	7	8	9	10	12	13	14	15	17	18	19	20	22
N	10	12	16	18	20	22	26	28	30	32	36	38	40	42	46
P	120	160	240	280	320	360	440	480	520	560	640	680	720	760	840
Weight (kg)	2.5	2.6	2.8	3.0	3.3	3.4	3.5	3.7	3.9	4.1	4.2	4.4	4.6	4.8	4.9

Motor mounting part

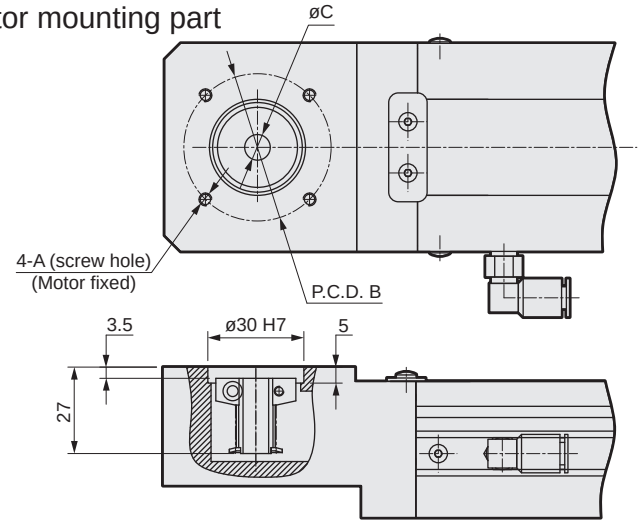

Mounted motor specification		A	B	C	Motor mounting bolt
M	100 W	M4	ø46	ø8	4-M4 × L12
Y	100 W	M4	ø46	ø8	4-M4 × L12
P	100 W	M3	ø45	ø8	4-M3 × L12
F	100 W	M4	ø46	ø8	4-M4 × L12

List of attachments

[Motor mounting parts]

Mounted motor specification	Timing belt, pulley	Fitting	Motor capacity	Motor mounting bolt	
				Size	Quantity
M	Included at shipment	Assembled at shipment	100 W	M4	2
Y				M4	2
P				M3	4
F				M4	2

*Refer to page 452 for fitting details.

[Origin sensor/Limit sensor]

Manufacturer	Model	Quantity
OMRON Corporation	EE-SX672	3

*Refer to page 448 for sensor specifications.

Dimensions Motor bottom mounting

● ECV-06-*****-D

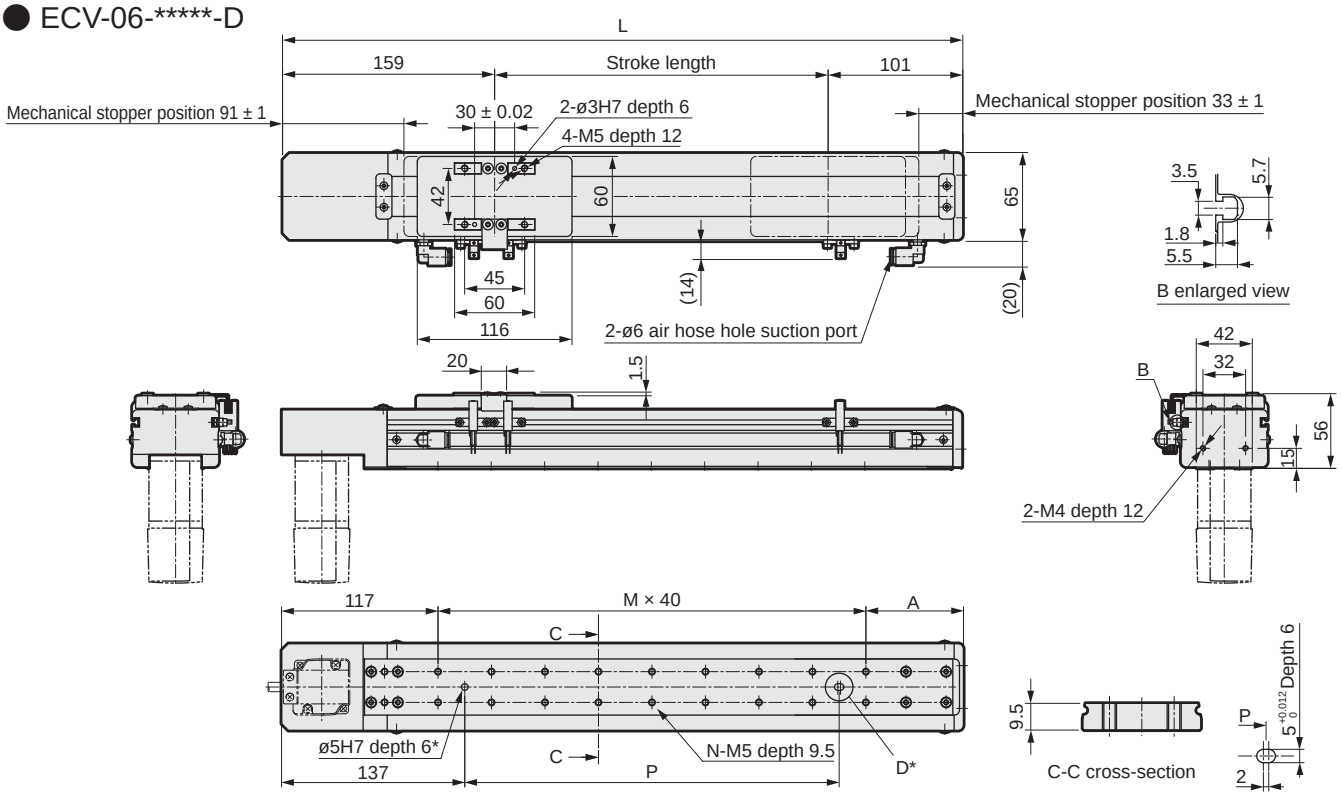

*Positioning pin hole (option)

Stroke length (mm)	100	150	200	250	300	350	400	450	500	550	600	650	700	750	800
L	360	410	460	510	560	610	660	710	760	810	860	910	960	1010	1060
A	83	93	63	73	83	93	63	73	83	93	63	73	83	93	63
M	4	5	7	8	9	10	12	13	14	15	17	18	19	20	22
N	10	12	16	18	20	22	26	28	30	32	36	38	40	42	46
P	120	160	240	280	320	360	440	480	520	560	640	680	720	760	840
Weight (kg)	2.5	2.6	2.8	3.0	3.3	3.4	3.5	3.7	3.9	4.1	4.2	4.4	4.6	4.8	4.9

Motor mounting part

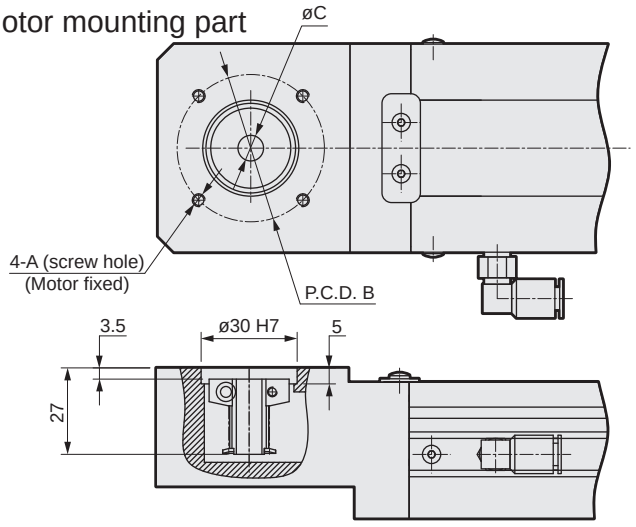

Mounted motor specification		A	B	C	Motor mounting bolt
M	100 W	M4	ø46	ø8	4-M4 × L12
Y	100 W	M4	ø46	ø8	4-M4 × L12
P	100 W	M3	ø45	ø8	4-M3 × L12
F	100 W	M4	ø46	ø8	4-M4 × L12

List of attachments

[Motor mounting parts]

Mounted motor specification	Timing belt, pulley	Fitting	Motor capacity	Motor mounting bolt	
				Size	Quantity
M	Included at shipment	Assembled at shipment	100 W	M4	2
Y				M4	2
P				M3	4
F				M4	2

*Refer to page 452 for fitting details.

[Origin sensor/Limit sensor]

Manufacturer	Model	Quantity
OMRON Corporation	EE-SX672	3

*Refer to page 448 for sensor specifications.

MEMO

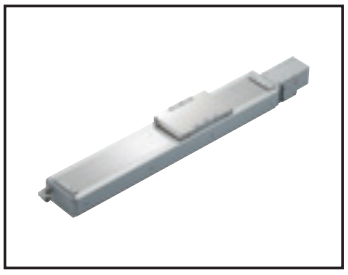

Electric actuator Belt

ECV-10 Series

Motor side mounting (left, right, bottom)

● Servo motor capacity: 100 W

How to order

ECV - 10 - 32 010 - R M 1 X N N N N

(A) (B) (C) (D) (E) (F) (G) (H) (I) (J) (K)

(A) Body size

10	Body width 102 mm

(B) Lead equivalent

32	32 mm

(C) Stroke length

010 to 255	100 mm (In 50 mm increments) 2550 mm

(D) Motor mounting direction *5

R	Right mounting
S	Right top mounting
T	Right bottom mounting
L	Left mounting
V	Left top mounting
W	Left bottom mounting

(E) Mounted motor specification

M	Select the mounted motor specification from the table below.
Y	
P	
F	

(F) Motor capacity

1	100 W

(G) Driving belt

X	Standard (rubber)
L	Low dust generation (urethane)

(H) Origin sensor (1 pc) *1 *2 *3

N	None
C	Outside motor side
D	Outside motor opposite side

(I) Limit sensor (2 pcs) *1 *2 *3

N	None
B	Outside

(J) Grease nipple *3 *4 *5

N	None (Body mounting direction: Standard)
R	Right
L	Left

(K) Positioning pin hole

N	None
P	Yes

Manufacturer	100 W
Mitsubishi Electric Corporation	M
Delta Electronics Co., Ltd.	M
Sanyo Denki Co., Ltd.	M
YASKAWA Electric Corporation	Y
Keyence Corporation	Y
Panasonic Corporation	P
OMRON Corporation	M
Fuji Electric Co., Ltd.	M
FANUC CORPORATION	F
Bosch Rexroth AG	P
Rockwell Automation, Inc.	M
SIEMENS AG	M

*Refer to page 403 for the motor model No.

*1: Origin sensor and limit sensor are available as a set. As it is both-or-nothing, select "None" for both.
*2: The user can adjust the sensor position. (Included at shipment)
*3: Contact CKD to use the origin sensor, limit sensor and grease nipple in the same direction.
*4: "Body mounting direction: Standard" here refers to mounting from the bottom side.
*5: When selecting motor mounting direction R, S, or T, grease nipple R cannot be selected. When selecting L, V, or W, grease nipple L cannot be selected.

Specifications

Applicable motor capacity		100 W servo motor
Drive method		Belt width 15 mm
Stroke length	mm	100 to 2550
Lead equivalent	mm	32
Max. load capacity *1	Horizontal kg	10
	Vertical kg	-
Max. speed	mm/s	1600
Rated thrust *1	N	61
Repeatability	mm	±0.04
Lost motion		0.1 mm or less
Dynamic allowable load	N	2651.4
Static allowable moment	N·m	MP: 110, MY: 110, MR: 120
Dynamic allowable moment	N·m	MP: 24.1, MY: 24.1, MR: 24.8
Operating ambient temperature, humidity		0 to 40°C (no freezing) 35 to 80% RH (no condensation)
Storage ambient temperature, humidity		-10 to 50°C (no freezing) 35 to 80% RH (no condensation)
Atmosphere		No corrosive gas, explosive gas, or dust

*1 Rated thrust and max. load capacity are guideline values assuming that the motor mounted will output the rated torque.

Stroke and max. speed

(mm/s)

Lead equivalent \ Stroke length	100 to 2550
32	1600

*The max. speed is the speed when the motor mounted by the customer can output a rotation speed of 3000 rpm.

Allowable overhang length

*Refer to page 446 for details.

Moment direction

MP MY MR

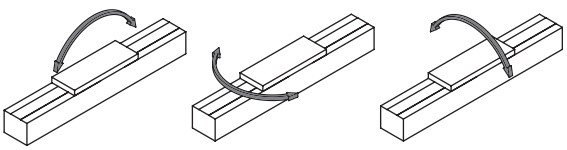

Dimensions Motor right-side mounting

● ECV-10-*****-R

· Refer to page 450 for grease nipple dimensions.

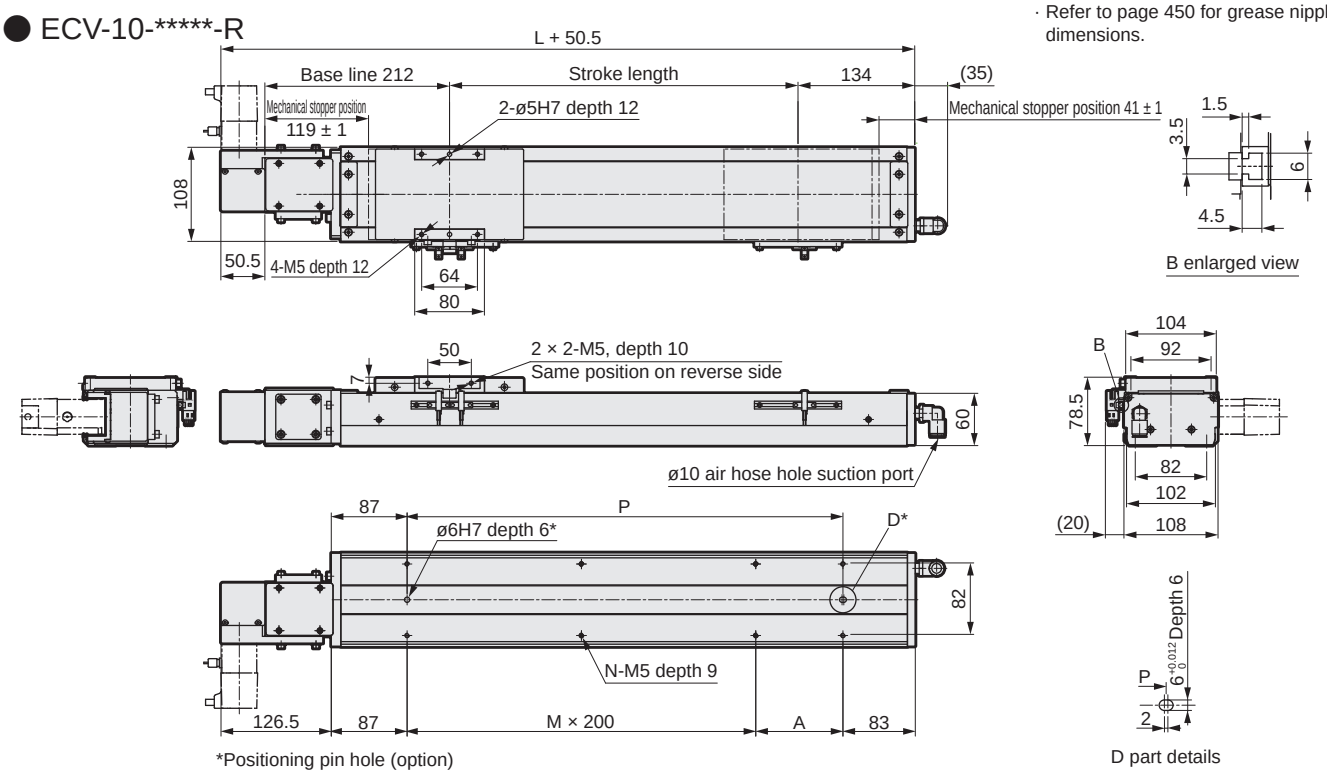

*Positioning pin hole (option)

Stroke length (mm)	100	150	200	250	300	350	400	450	500	550	600	650	700	750	800	850	900	950	1000	1050	1100	1150	1200	1250	1300
L	446	496	546	596	646	696	746	796	846	896	946	996	1046	1096	1146	1196	1246	1296	1346	1396	1446	1496	1546	1596	1646
A	200	50	100	150	200	50	100	150	200	50	100	150	200	50	100	150	200	50	100	150	200	50	100	150	200
M	0	1	1	1	1	2	2	2	2	3	3	3	3	4	4	4	4	5	5	5	5	6	6	6	6
N	4	6	6	6	6	8	8	8	8	10	10	10	10	12	12	12	12	14	14	14	14	16	16	16	16
P	200	250	300	350	400	450	500	550	600	650	700	750	800	850	900	950	1000	1050	1100	1150	1200	1250	1300	1350	1400
Weight (kg)	8.3	8.7	9.2	9.6	10.0	10.4	10.8	11.3	11.7	12.1	12.5	13.0	13.4	13.8	14.2	14.7	15.1	15.5	15.9	16.3	16.8	17.2	17.6	18.0	18.4

Stroke length (mm)	1350	1400	1450	1500	1550	1600	1650	1700	1750	1800	1850	1900	1950	2000	2050	2100	2150	2200	2250	2300	2350	2400	2450	2500	2550
L	1696	1746	1796	1846	1896	1946	1996	2046	2096	2146	2196	2246	2296	2346	2396	2446	2496	2546	2596	2646	2696	2746	2796	2846	2896
A	50	100	150	200	50	100	150	200	50	100	150	200	50	100	150	200	50	100	150	200	50	100	150	200	50
M	7	7	7	7	8	8	8	8	9	9	9	9	10	10	10	10	11	11	11	11	12	12	12	12	13
N	18	18	18	18	20	20	20	20	22	22	22	22	24	24	24	24	26	26	26	26	28	28	28	28	30
P	1450	1500	1550	1600	1650	1700	1750	1800	1850	1900	1950	2000	2050	2100	2150	2200	2250	2300	2350	2400	2450	2500	2550	2600	2650
Weight (kg)	18.9	19.3	19.7	20.1	20.5	21.0	21.4	21.8	22.2	22.4	23.1	23.5	23.9	24.3	24.7	25.2	25.6	26.0	26.4	26.8	27.3	27.7	28.1	28.5	28.9

Motor mounting part

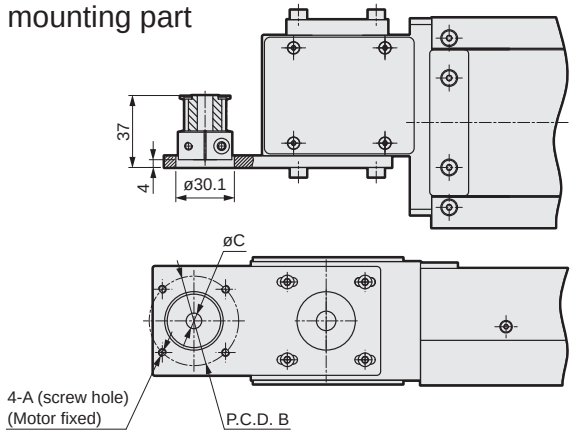

Mounted motor specification		A	B	C	Motor mounting bolt
M	100 W	M4	ø46	ø8	4-M4 × L12
Y	100 W	M4	ø46	ø8	4-M4 × L12
P	100 W	M3	ø45	ø8	4-M3 × L12
F	100 W	M4	ø46	ø8	4-M4 × L12

List of attachments

[Motor mounting parts]

Mounted motor specification	Timing belt, pulley	Fitting	Motor capacity	Motor mounting bolt	
				Size	Quantity
M	Included at shipment	Included at shipment	100 W	M4	2
Y				M4	2
P				M3	4
F				M4	2

*Refer to page 452 for fitting details.

[Origin sensor/Limit sensor]

Manufacturer	Model	Quantity
OMRON Corporation	EE-SX672	3

*Refer to page 448 for sensor specifications.

Dimensions Motor right top mounting

● ECV-10-*****-S

· Refer to page 450 for grease nipple dimensions.

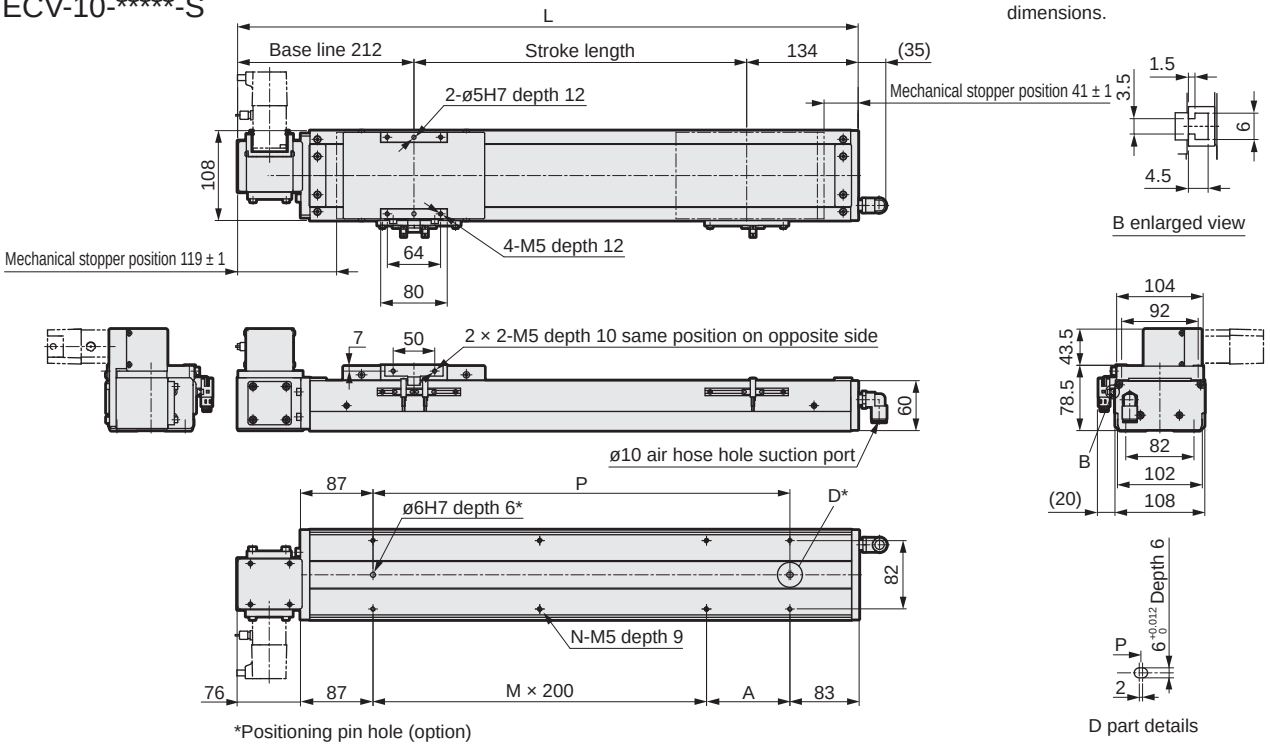

Stroke length (mm)	100	150	200	250	300	350	400	450	500	550	600	650	700	750	800	850	900	950	1000	1050	1100	1150	1200	1250	1300
L	446	496	546	596	646	696	746	796	846	896	946	996	1046	1096	1146	1196	1246	1296	1346	1396	1446	1496	1546	1596	1646
A	200	50	100	150	200	50	100	150	200	50	100	150	200	50	100	150	200	50	100	150	200	50	100	150	200
M	0	1	1	1	1	2	2	2	2	3	3	3	3	4	4	4	4	5	5	5	5	6	6	6	6
N	4	6	6	6	6	8	8	8	8	10	10	10	10	12	12	12	12	14	14	14	14	16	16	16	16
P	200	250	300	350	400	450	500	550	600	650	700	750	800	850	900	950	1000	1050	1100	1150	1200	1250	1300	1350	1400
Weight (kg)	8.3	8.7	9.2	9.6	10.0	10.4	10.8	11.3	11.7	12.1	12.5	13.0	13.4	13.8	14.2	14.7	15.1	15.5	15.9	16.3	16.8	17.2	17.6	18.0	18.4

Stroke length (mm)	1350	1400	1450	1500	1550	1600	1650	1700	1750	1800	1850	1900	1950	2000	2050	2100	2150	2200	2250	2300	2350	2400	2450	2500	2550
L	1696	1746	1796	1846	1896	1946	1996	2046	2096	2146	2196	2246	2296	2346	2396	2446	2496	2546	2596	2646	2696	2746	2796	2846	2896
A	50	100	150	200	50	100	150	200	50	100	150	200	50	100	150	200	50	100	150	200	50	100	150	200	50
M	7	7	7	7	8	8	8	8	9	9	9	9	10	10	10	10	11	11	11	11	12	12	12	12	13
N	18	18	18	18	20	20	20	20	22	22	22	22	24	24	24	24	26	26	26	26	28	28	28	28	30
P	1450	1500	1550	1600	1650	1700	1750	1800	1850	1900	1950	2000	2050	2100	2150	2200	2250	2300	2350	2400	2450	2500	2550	2600	2650
Weight (kg)	18.9	19.3	19.7	20.1	20.5	21.0	21.4	21.8	22.2	22.4	23.1	23.5	23.9	24.3	24.7	25.2	25.6	26.0	26.4	26.8	27.3	27.7	28.1	28.5	28.9

Motor mounting part

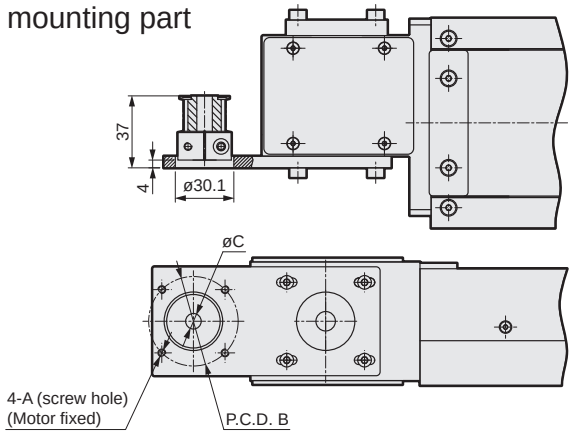

Mounted motor specification		A	B	C	Motor mounting bolt
M	100 W	M4	ø46	ø8	4-M4 × L12
Y	100 W	M4	ø46	ø8	4-M4 × L12
P	100 W	M3	ø45	ø8	4-M3 × L12
F	100 W	M4	ø46	ø8	4-M4 × L12

List of attachments

[Motor mounting parts]

Mounted motor specification	Timing belt, pulley	Fitting	Motor capacity	Motor mounting bolt	
				Size	Quantity
M	Included at shipment	Included at shipment	100 W	M4	2
Y				M4	2
P				M3	4
F				M4	2

*Refer to page 452 for fitting details.

[Origin sensor/Limit sensor]

Manufacturer	Model	Quantity
OMRON Corporation	EE-SX672	3

*Refer to page 448 for sensor specifications.

Dimensions Motor right bottom mounting

● ECV-10-*****-T

· Refer to page 450 for grease nipple dimensions.

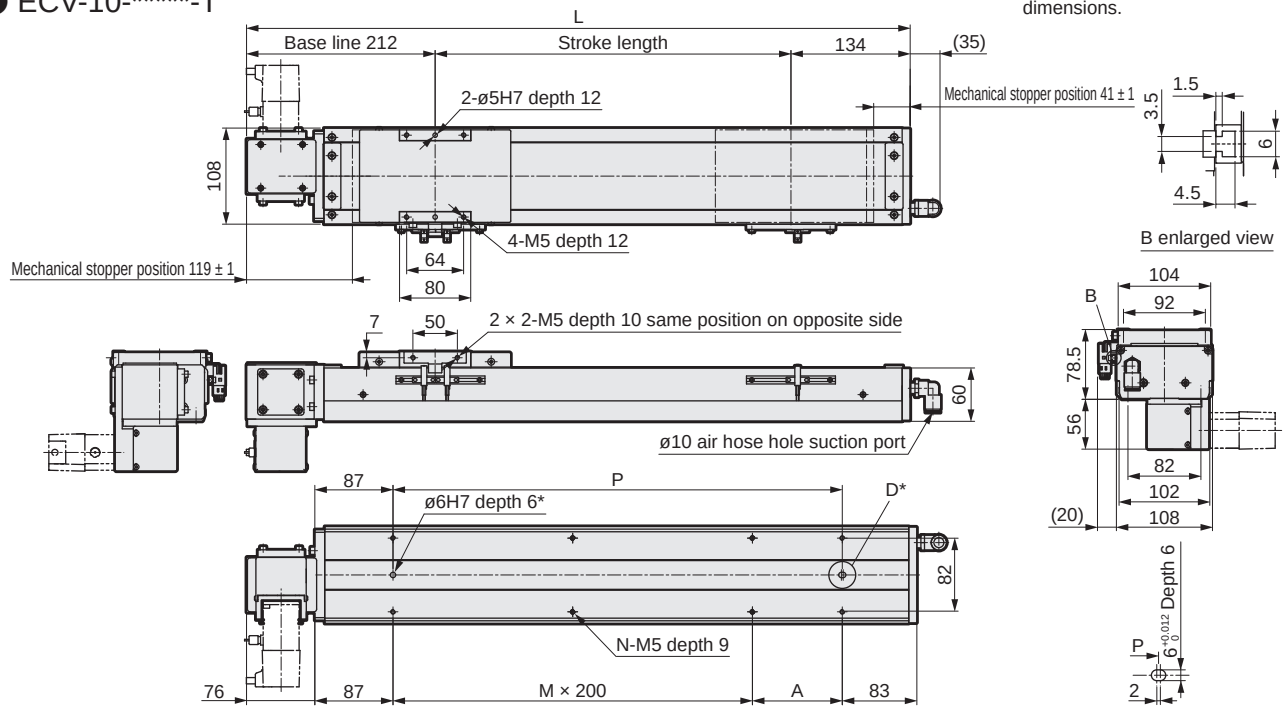

Stroke length (mm)	100	150	200	250	300	350	400	450	500	550	600	650	700	750	800	850	900	950	1000	1050	1100	1150	1200	1250	1300
L	446	496	546	596	646	696	746	796	846	896	946	996	1046	1096	1146	1196	1246	1296	1346	1396	1446	1496	1546	1596	1646
A	200	50	100	150	200	50	100	150	200	50	100	150	200	50	100	150	200	50	100	150	200	50	100	150	200
M	0	1	1	1	1	2	2	2	2	3	3	3	3	4	4	4	4	5	5	5	5	6	6	6	6
N	4	6	6	6	6	8	8	8	8	10	10	10	10	12	12	12	12	14	14	14	14	16	16	16	16
P	200	250	300	350	400	450	500	550	600	650	700	750	800	850	900	950	1000	1050	1100	1150	1200	1250	1300	1350	1400
Weight (kg)	8.3	8.7	9.2	9.6	10.0	10.4	10.8	11.3	11.7	12.1	12.5	13.0	13.4	13.8	14.2	14.7	15.1	15.5	15.9	16.3	16.8	17.2	17.6	18.0	18.4

Stroke length (mm)	1350	1400	1450	1500	1550	1600	1650	1700	1750	1800	1850	1900	1950	2000	2050	2100	2150	2200	2250	2300	2350	2400	2450	2500	2550
L	1696	1746	1796	1846	1896	1946	1996	2046	2096	2146	2196	2246	2296	2346	2396	2446	2496	2546	2596	2646	2696	2746	2796	2846	2896
A	50	100	150	200	50	100	150	200	50	100	150	200	50	100	150	200	50	100	150	200	50	100	150	200	50
M	7	7	7	7	8	8	8	8	9	9	9	9	10	10	10	10	11	11	11	11	12	12	12	12	13
N	18	18	18	18	20	20	20	20	22	22	22	22	24	24	24	24	26	26	26	26	28	28	28	28	30
P	1450	1500	1550	1600	1650	1700	1750	1800	1850	1900	1950	2000	2050	2100	2150	2200	2250	2300	2350	2400	2450	2500	2550	2600	2650
Weight (kg)	18.9	19.3	19.7	20.1	20.5	21.0	21.4	21.8	22.2	22.4	23.1	23.5	23.9	24.3	24.7	25.2	25.6	26.0	26.4	26.8	27.3	27.7	28.1	28.5	28.9

Motor mounting part

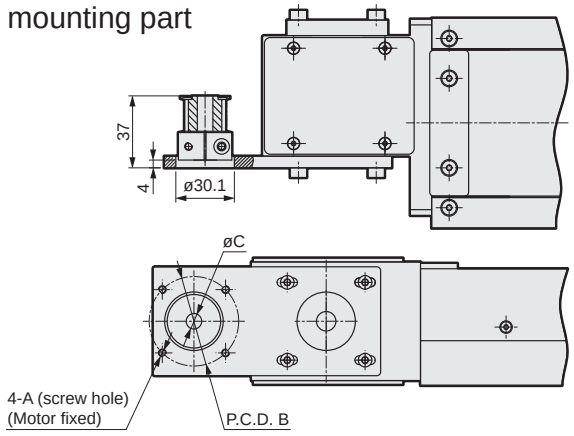

Mounted motor specification		A	B	C	Motor mounting bolt
M	100 W	M4	ø46	ø8	4-M4 × L12
Y	100 W	M4	ø46	ø8	4-M4 × L12
P	100 W	M3	ø45	ø8	4-M3 × L12
F	100 W	M4	ø46	ø8	4-M4 × L12

List of attachments

[Motor mounting parts]

Mounted motor specification	Timing belt, pulley	Fitting	Motor capacity	Motor mounting bolt	
				Size	Quantity
M	Included at shipment	Included at shipment	100 W	M4	2
Y				M4	2
P				M3	4
F				M4	2

*Refer to page 452 for fitting details.

[Origin sensor/Limit sensor]

Manufacturer	Model	Quantity
OMRON Corporation	EE-SX672	3

*Refer to page 448 for sensor specifications.

Dimensions Motor left-side mounting

● ECV-10-*****-L

· Refer to page 450 for grease nipple dimensions.

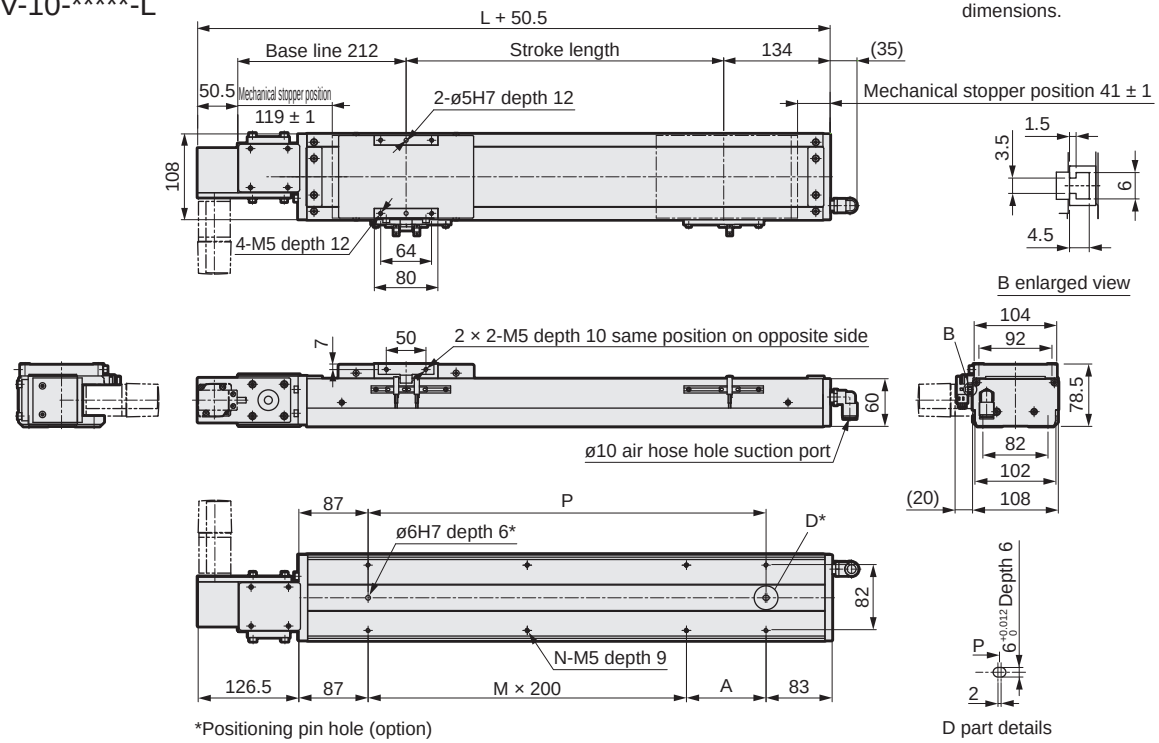

*Positioning pin hole (option)

D part details

Stroke length (mm)	100	150	200	250	300	350	400	450	500	550	600	650	700	750	800	850	900	950	1000	1050	1100	1150	1200	1250	1300
L	446	496	546	596	646	696	746	796	846	896	946	996	1046	1096	1146	1196	1246	1296	1346	1396	1446	1496	1546	1596	1646
A	200	50	100	150	200	50	100	150	200	50	100	150	200	50	100	150	200	50	100	150	200	50	100	150	200
M	0	1	1	1	1	2	2	2	2	3	3	3	3	4	4	4	4	5	5	5	5	6	6	6	6
N	4	6	6	6	6	8	8	8	8	10	10	10	10	12	12	12	12	14	14	14	14	16	16	16	16
P	200	250	300	350	400	450	500	550	600	650	700	750	800	850	900	950	1000	1050	1100	1150	1200	1250	1300	1350	1400
Weight (kg)	8.3	8.7	9.2	9.6	10.0	10.4	10.8	11.3	11.7	12.1	12.5	13.0	13.4	13.8	14.2	14.7	15.1	15.5	15.9	16.3	16.8	17.2	17.6	18.0	18.4

Stroke length (mm)	1350	1400	1450	1500	1550	1600	1650	1700	1750	1800	1850	1900	1950	2000	2050	2100	2150	2200	2250	2300	2350	2400	2450	2500	2550
L	1696	1746	1796	1846	1896	1946	1996	2046	2096	2146	2196	2246	2296	2346	2396	2446	2496	2546	2596	2646	2696	2746	2796	2846	2896
A	50	100	150	200	50	100	150	200	50	100	150	200	50	100	150	200	50	100	150	200	50	100	150	200	50
M	7	7	7	7	8	8	8	8	9	9	9	9	10	10	10	10	11	11	11	11	12	12	12	12	13
N	18	18	18	18	20	20	20	20	22	22	22	22	24	24	24	24	26	26	26	26	28	28	28	28	30
P	1450	1500	1550	1600	1650	1700	1750	1800	1850	1900	1950	2000	2050	2100	2150	2200	2250	2300	2350	2400	2450	2500	2550	2600	2650
Weight (kg)	18.9	19.3	19.7	20.1	20.5	21.0	21.4	21.8	22.2	22.4	23.1	23.5	23.9	24.3	24.7	25.2	25.6	26.0	26.4	26.8	27.3	27.7	28.1	28.5	28.9

Motor mounting part

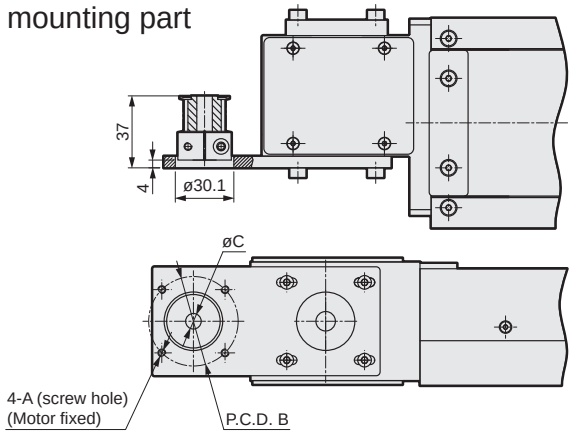

Mounted motor specification		A	B	C	Motor mounting bolt
M	100 W	M4	ø46	ø8	4-M4 × L12
Y	100 W	M4	ø46	ø8	4-M4 × L12
P	100 W	M3	ø45	ø8	4-M3 × L12
F	100 W	M4	ø46	ø8	4-M4 × L12

List of attachments

[Motor mounting parts]

Mounted motor specification	Timing belt, pulley	Fitting	Motor capacity	Motor mounting bolt	
				Size	Quantity
M	Included at shipment	Included at shipment	100 W	M4	2
Y				M4	2
P				M3	4
F				M3	4

*Refer to page 452 for fitting details.

[Origin sensor/Limit sensor]

Manufacturer	Model	Quantity
OMRON Corporation	EE-SX672	3

*Refer to page 448 for sensor specifications.

Dimensions Motor left top mounting

● ECV-10-*****-V

· Refer to page 450 for grease nipple dimensions.

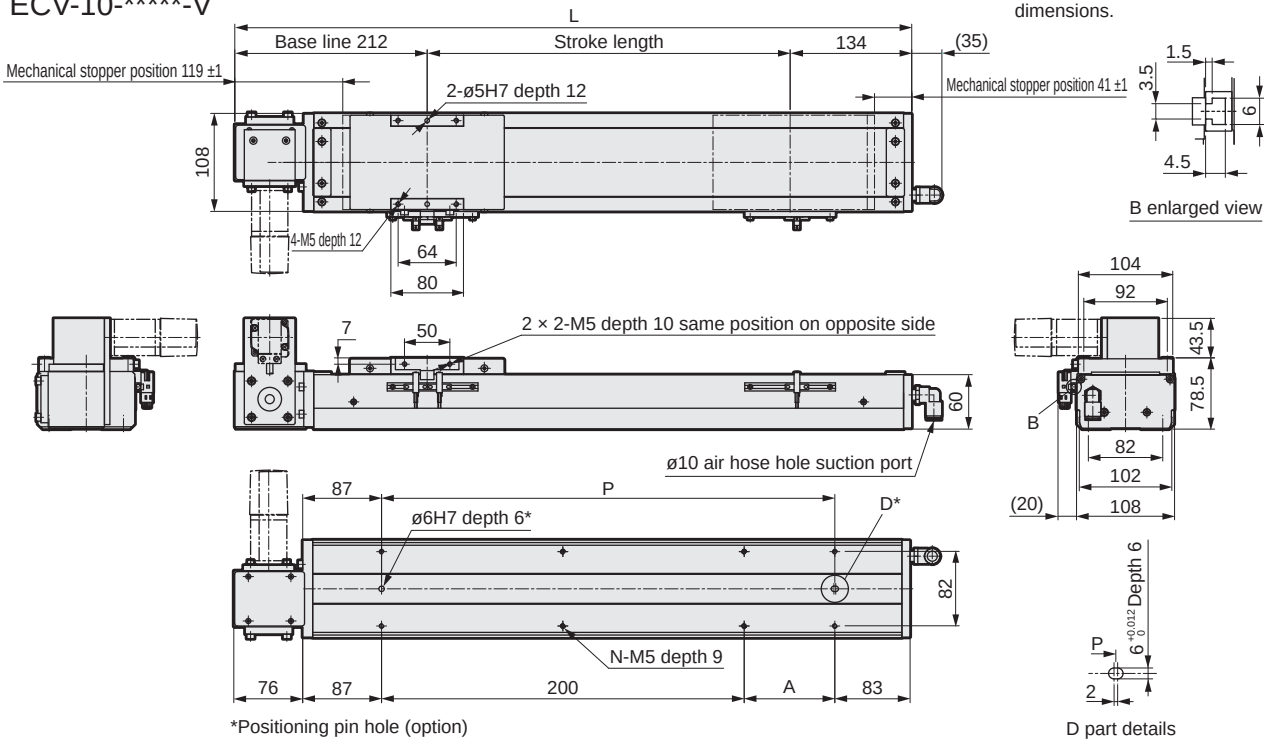

*Positioning pin hole (option)

Stroke length (mm)	100	150	200	250	300	350	400	450	500	550	600	650	700	750	800	850	900	950	1000	1050	1100	1150	1200	1250	1300
L	446	496	546	596	646	696	746	796	846	896	946	996	1046	1096	1146	1196	1246	1296	1346	1396	1446	1496	1546	1596	1646
A	200	50	100	150	200	50	100	150	200	50	100	150	200	50	100	150	200	50	100	150	200	50	100	150	200
M	0	1	1	1	1	2	2	2	2	3	3	3	3	4	4	4	4	5	5	5	5	6	6	6	6
N	4	6	6	6	6	8	8	8	8	10	10	10	10	12	12	12	12	14	14	14	14	16	16	16	16
P	200	250	300	350	400	450	500	550	600	650	700	750	800	850	900	950	1000	1050	1100	1150	1200	1250	1300	1350	1400
Weight (kg)	8.3	8.7	9.2	9.6	10.0	10.4	10.8	11.3	11.7	12.1	12.5	13.0	13.4	13.8	14.2	14.7	15.1	15.5	15.9	16.3	16.8	17.2	17.6	18.0	18.4

Stroke length (mm)	1350	1400	1450	1500	1550	1600	1650	1700	1750	1800	1850	1900	1950	2000	2050	2100	2150	2200	2250	2300	2350	2400	2450	2500	2550
L	1696	1746	1796	1846	1896	1946	1996	2046	2096	2146	2196	2246	2296	2346	2396	2446	2496	2546	2596	2646	2696	2746	2796	2846	2896
A	50	100	150	200	50	100	150	200	50	100	150	200	50	100	150	200	50	100	150	200	50	100	150	200	50
M	7	7	7	7	8	8	8	8	9	9	9	9	10	10	10	10	11	11	11	11	12	12	12	12	13
N	18	18	18	18	20	20	20	20	22	22	22	22	24	24	24	24	26	26	26	26	28	28	28	28	30
P	1450	1500	1550	1600	1650	1700	1750	1800	1850	1900	1950	2000	2050	2100	2150	2200	2250	2300	2350	2400	2450	2500	2550	2600	2650
Weight (kg)	18.9	19.3	19.7	20.1	20.5	21.0	21.4	21.8	22.2	22.4	23.1	23.5	23.9	24.3	24.7	25.2	25.6	26.0	26.4	26.8	27.3	27.7	28.1	28.5	28.9

Motor mounting part

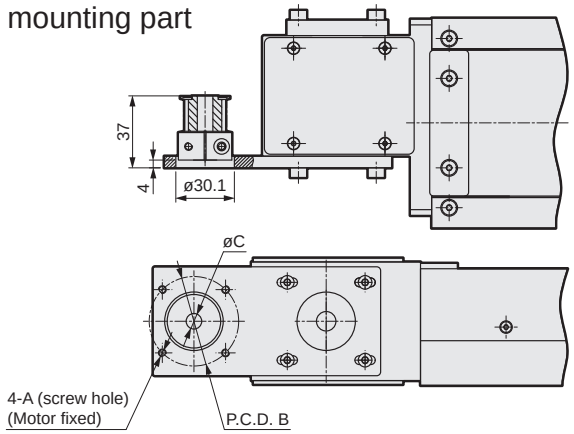

Mounted motor specification		A	B	C	Motor mounting bolt
M	100 W	M4	ø46	ø8	4-M4 × L12
Y	100 W	M4	ø46	ø8	4-M4 × L12
P	100 W	M3	ø45	ø8	4-M3 × L12
F	100 W	M4	ø46	ø8	4-M4 × L12

List of attachments

[Motor mounting parts]

Mounted motor specification	Timing belt, pulley	Fitting	Motor capacity	Motor mounting bolt	
				Size	Quantity
M	Included at shipment	Included at shipment	100 W	M4	2
Y				M4	2
P				M3	4
F				M4	2

*Refer to page 452 for fitting details.

[Origin sensor/Limit sensor]

Manufacturer	Model	Quantity
OMRON Corporation	EE-SX672	3

*Refer to page 448 for sensor specifications.

Dimensions Motor left bottom mounting

● ECV-10-*****-W

· Refer to page 450 for grease nipple dimensions.

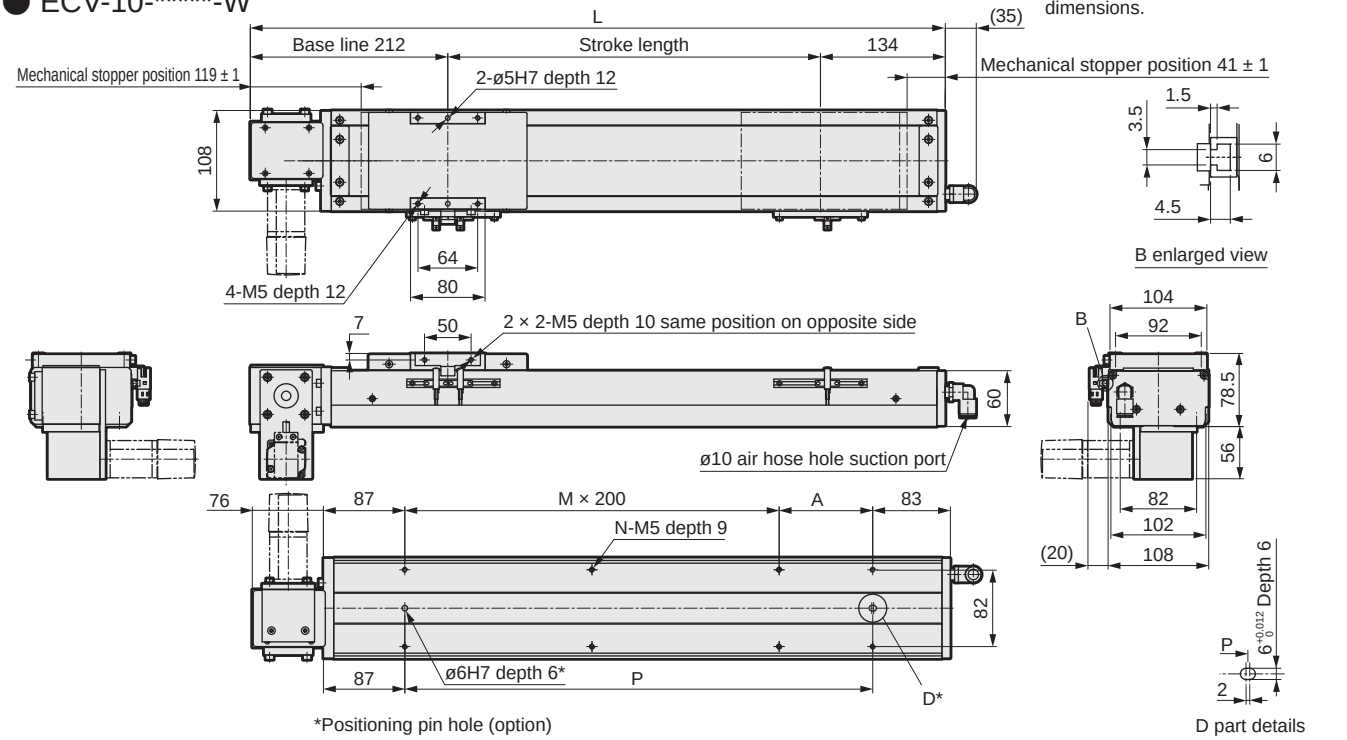

Stroke length (mm)	100	150	200	250	300	350	400	450	500	550	600	650	700	750	800	850	900	950	1000	1050	1100	1150	1200	1250	1300
L	446	496	546	596	646	696	746	796	846	896	946	996	1046	1096	1146	1196	1246	1296	1346	1396	1446	1496	1546	1596	1646
A	200	50	100	150	200	50	100	150	200	50	100	150	200	50	100	150	200	50	100	150	200	50	100	150	200
M	0	1	1	1	1	2	2	2	2	3	3	3	3	4	4	4	4	5	5	5	5	6	6	6	6
N	4	6	6	6	6	8	8	8	8	10	10	10	10	12	12	12	12	14	14	14	14	16	16	16	16
P	200	250	300	350	400	450	500	550	600	650	700	750	800	850	900	950	1000	1050	1100	1150	1200	1250	1300	1350	1400
Weight (kg)	8.3	8.7	9.2	9.6	10.0	10.4	10.8	11.3	11.7	12.1	12.5	13.0	13.4	13.8	14.2	14.7	15.1	15.5	15.9	16.3	16.8	17.2	17.6	18.0	18.4

Stroke length (mm)	1350	1400	1450	1500	1550	1600	1650	1700	1750	1800	1850	1900	1950	2000	2050	2100	2150	2200	2250	2300	2350	2400	2450	2500	2550
L	1696	1746	1796	1846	1896	1946	1996	2046	2096	2146	2196	2246	2296	2346	2396	2446	2496	2546	2596	2646	2696	2746	2796	2846	2896
A	50	100	150	200	50	100	150	200	50	100	150	200	50	100	150	200	50	100	150	200	50	100	150	200	50
M	7	7	7	7	8	8	8	8	9	9	9	9	10	10	10	10	11	11	11	11	12	12	12	12	13
N	18	18	18	18	20	20	20	20	22	22	22	22	24	24	24	24	26	26	26	26	28	28	28	28	30
P	1450	1500	1550	1600	1650	1700	1750	1800	1850	1900	1950	2000	2050	2100	2150	2200	2250	2300	2350	2400	2450	2500	2550	2600	2650
Weight (kg)	18.9	19.3	19.7	20.1	20.5	21.0	21.4	21.8	22.2	22.4	23.1	23.5	23.9	24.3	24.7	25.2	25.6	26.0	26.4	26.8	27.3	27.7	28.1	28.5	28.9

Motor mounting part

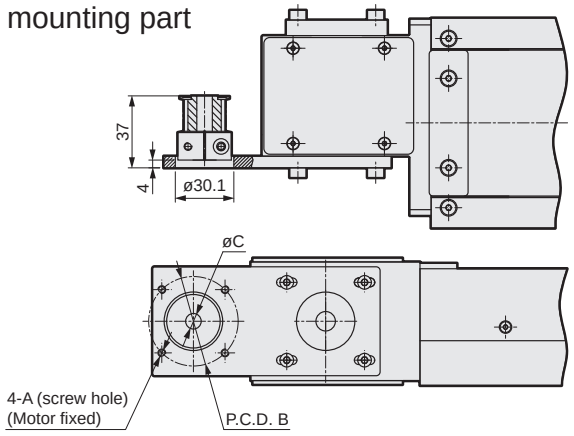

Mounted motor specification		A	B	C	Motor mounting bolt
M	100 W	M4	ø46	ø8	4-M4 × L12
Y	100 W	M4	ø46	ø8	4-M4 × L12
P	100 W	M3	ø45	ø8	4-M3 × L12
F	100 W	M4	ø46	ø8	4-M4 × L12

List of attachments

[Motor mounting parts]

Mounted motor specification	Timing belt, pulley	Fitting	Motor capacity	Motor mounting bolt	
				Size	Quantity
M	Included at shipment	Included at shipment	100 W	M4	2
Y				M4	2
P				M3	4
F				M4	2

*Refer to page 452 for fitting details.

[Origin sensor/Limit sensor]

Manufacturer	Model	Quantity
OMRON Corporation	EE-SX672	3

*Refer to page 448 for sensor specifications.

MEMO

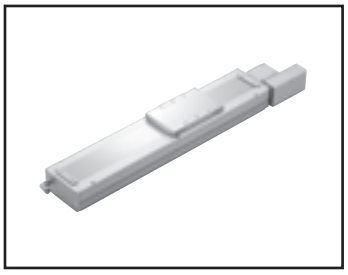

Electric actuator Belt

ECV-14 Series

Motor side mounting (left, right, bottom)

● Servo motor capacity: 200 W

How to order

ECV - 14 - 40 - 010 - R M 2 X N N N N

Ⓐ Body size

14	Body width 135 mm

Ⓑ Lead equivalent

40	40 mm

Ⓒ Stroke length

010 to 305	100 mm (In 50 mm increments) 3050 mm

Ⓓ Motor mounting direction *5

R	Right mounting
S	Right top mounting
T	Right bottom mounting
L	Left mounting
V	Left top mounting
W	Left bottom mounting

Ⓔ Mounted motor specification

M, Y, P, F	Select the mounted motor specification from the table below.

Ⓕ Motor capacity

2	200 W

Ⓖ Driving belt

X	Standard (rubber)
L	Low dust generation (urethane)

Ⓗ Origin sensor (1 pc) *1 *2 *3

N	None
C	Outside motor side
D	Outside motor opposite side

Ⓘ Limit sensor (2 pcs) *1 *2 *3

N	None
B	Outside

Ⓙ Grease nipple *3 *4 *5

N	None (Body mounting direction: Standard)
R	Right
L	Left

Ⓚ Positioning pin hole

N	None
P	Yes

Manufacturer	200 W
Mitsubishi Electric Corporation	M
Delta Electronics Co., Ltd.	M
Sanyo Denki Co., Ltd.	M
YASKAWA Electric Corporation	Y
Keyence Corporation	Y
Panasonic Corporation	P
OMRON Corporation	P
Fuji Electric Co., Ltd.	M
FANUC CORPORATION	F
Bosch Rexroth AG	P
Rockwell Automation, Inc.	M
SIEMENS AG	M

*Refer to page 403 for the motor model No.

*1: Origin sensor and limit sensor are available as a set. As it is both-or-nothing, select "None" for both.
*2: The user can adjust the sensor position. (Included at shipment)
*3: Contact CKD to use the origin sensor, limit sensor and grease nipple in the same direction.
*4: "Body mounting direction: Standard" here refers to mounting from the bottom side.
*5: When selecting motor mounting direction R, S, or T, grease nipple R cannot be selected. When selecting L, V, or W, grease nipple L cannot be selected.

Specifications

Applicable motor capacity		200 W servo motor
Drive method		Belt width 22 mm
Stroke length	mm	100 to 3050
Lead equivalent	mm	40
Max. load capacity *1	Horizontal kg	25
	Vertical kg	-
Max. speed	mm/s	2000
Rated thrust *1	N	100
Repeatability	mm	±0.04
Lost motion		0.1 mm or less
Dynamic allowable load	N	6566.9
Static allowable moment	N·m	MP: 552, MY: 551, MR: 485
Dynamic allowable moment	N·m	MP: 262.7, MY: 262.7, MR: 261.0
Operating ambient temperature, humidity		0 to 40°C (no freezing) 35 to 80% RH (no condensation)
Storage ambient temperature, humidity		-10 to 50°C (no freezing) 35 to 80% RH (no condensation)
Atmosphere		No corrosive gas, explosive gas, or dust

*1 Rated thrust and max. load capacity are guideline values assuming that the motor mounted will output the rated torque.

Stroke and max. speed

(mm/s)

Lead equivalent \ Stroke length	100 to 3050
40	2000

*The max. speed is the speed when the motor mounted by the customer can output a rotation speed of 3000 rpm.

Allowable overhang length

*Refer to page 446 for details.

Moment direction

MP MY MR

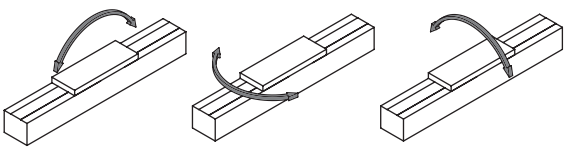

Dimensions Motor right-side mounting

● ECV-14-*****-R

· Refer to page 450 for grease nipple dimensions.

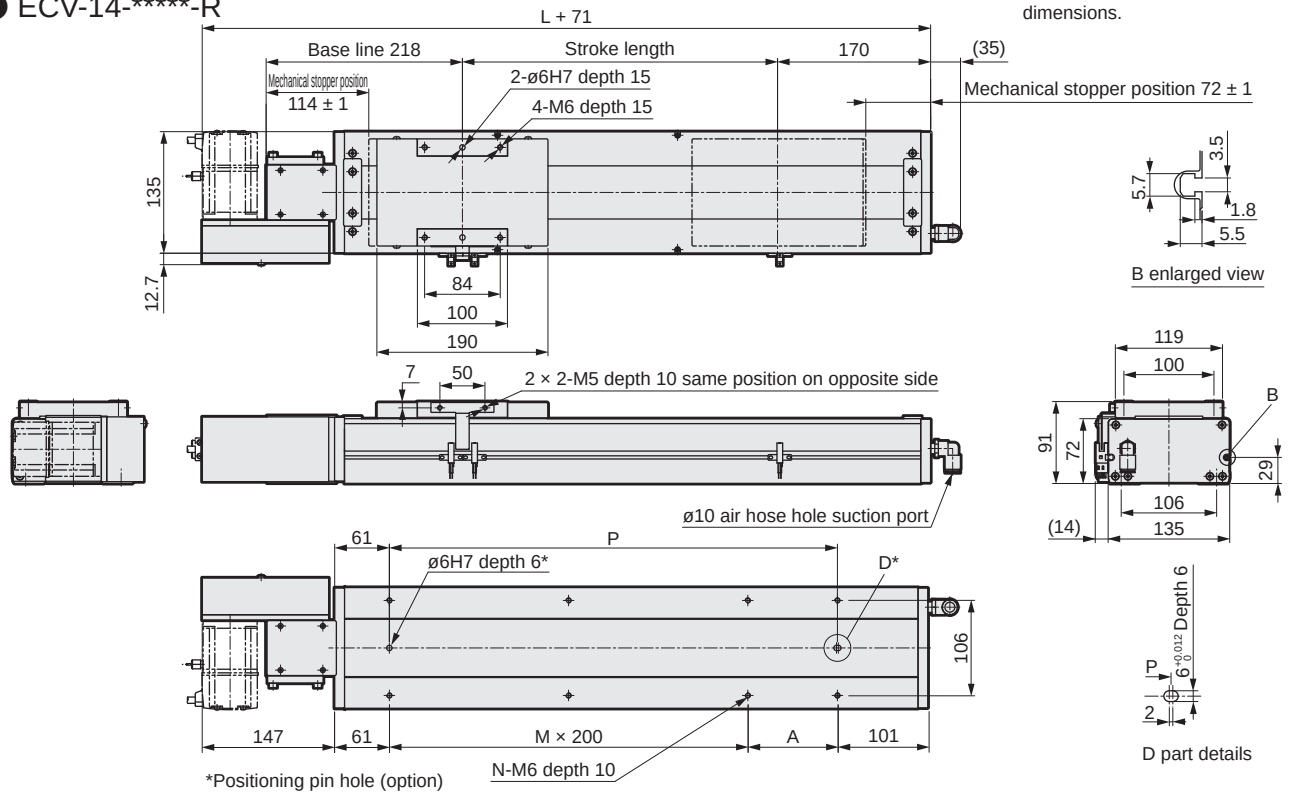

Stroke length (mm)	100	150	200	250	300	350	400	450	500	550	600	650	700	750	800	850	900	950	1000	1050	1100	1150	1200	1250	1300	1350	1400	1450	1500	1550
L	488	538	588	638	688	738	788	838	888	938	988	1038	1088	1138	1188	1238	1288	1338	1388	1438	1488	1538	1588	1638	1688	1738	1788	1838	1888	1938
A	50	100	150	200	50	100	150	200	50	100	150	200	50	100	150	200	50	100	150	200	50	100	150	200	50	100	150	200	50	100
M	1	1	1	1	2	2	2	2	3	3	3	3	4	4	4	4	5	5	5	5	6	6	6	6	7	7	7	7	8	8
N	6	6	6	6	8	8	8	8	10	10	10	10	12	12	12	12	14	14	14	14	16	16	16	16	18	18	18	18	20	20
P	250	300	350	400	450	500	550	600	650	700	750	800	850	900	950	1000	1050	1100	1150	1200	1250	1300	1350	1400	1450	1500	1550	1600	1650	1700
Weight (kg)	11.6	12.0	12.5	13.0	13.5	14.0	14.4	15.0	15.4	16.0	16.4	16.9	17.4	17.9	18.4	18.9	19.4	19.9	20.3	20.9	21.5	22.1	22.7	23.3	23.9	24.5	25.1	25.7	26.3	26.9

Stroke length (mm)	1600	1650	1700	1750	1800	1850	1900	1950	2000	2050	2100	2150	2200	2250	2300	2350	2400	2450	2500	2550	2600	2650	2700	2750	2800	2850	2900	2950	3000	3050
L	1988	2038	2088	2138	2188	2238	2288	2338	2388	2438	2488	2538	2588	2638	2688	2738	2788	2838	2888	2938	2988	3038	3088	3138	3188	3238	3288	3338	3388	3438
A	150	200	50	100	150	200	50	100	150	200	50	100	150	200	50	100	150	200	50	100	150	200	50	100	150	200	50	100	150	200
M	8	8	9	9	9	9	10	10	10	10	11	11	11	11	12	12	12	12	13	13	13	13	14	14	14	14	15	15	15	15
N	20	20	22	22	22	22	24	24	24	24	26	26	26	26	28	28	28	28	30	30	30	30	32	32	32	32	34	34	34	34
P	1750	1800	1850	1900	1950	2000	2050	2100	2150	2200	2250	2300	2350	2400	2450	2500	2550	2600	2650	2700	2750	2800	2850	2900	2950	3000	3050	3100	3150	3200
Weight (kg)	27.5	28.1	28.7	29.3	29.9	30.5	31.1	31.7	32.3	32.9	33.5	34.1	34.7	35.3	35.9	36.5	37.1	37.7	38.3	38.9	39.5	40.1	40.7	41.3	41.5	42.5	43.1	43.7	44.3	44.9

Motor mounting part

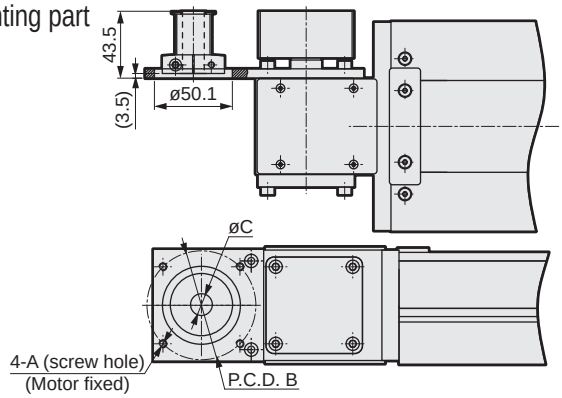

Mounted motor specification		A	B	C	Motor mounting bolt
M	200 W	M5	ø70	ø14	4-M5 × L12
Y	200 W	M5	ø70	ø14	4-M5 × L12
P	200 W	M4	ø70	ø11	4-M4 × L12
F	200 W	M5	ø70	ø9	4-M5 × L12

List of attachments

[Motor mounting parts]

Mounted motor specification	Timing belt, pulley	Fitting	Motor capacity	Motor mounting bolt	
				Size	Quantity
M	Included at shipment	Included at shipment	200 W	M5	4
Y				M5	4
P				M4	4
F				M5	4

*Refer to page 452 for fitting details.

[Origin sensor/Limit sensor]

Manufacturer	Model	Quantity
OMRON Corporation	EE-SX672	3

*Refer to page 448 for sensor specifications.

Dimensions Motor right top mounting

● ECV-14-*****-S

· Refer to page 450 for grease nipple dimensions.

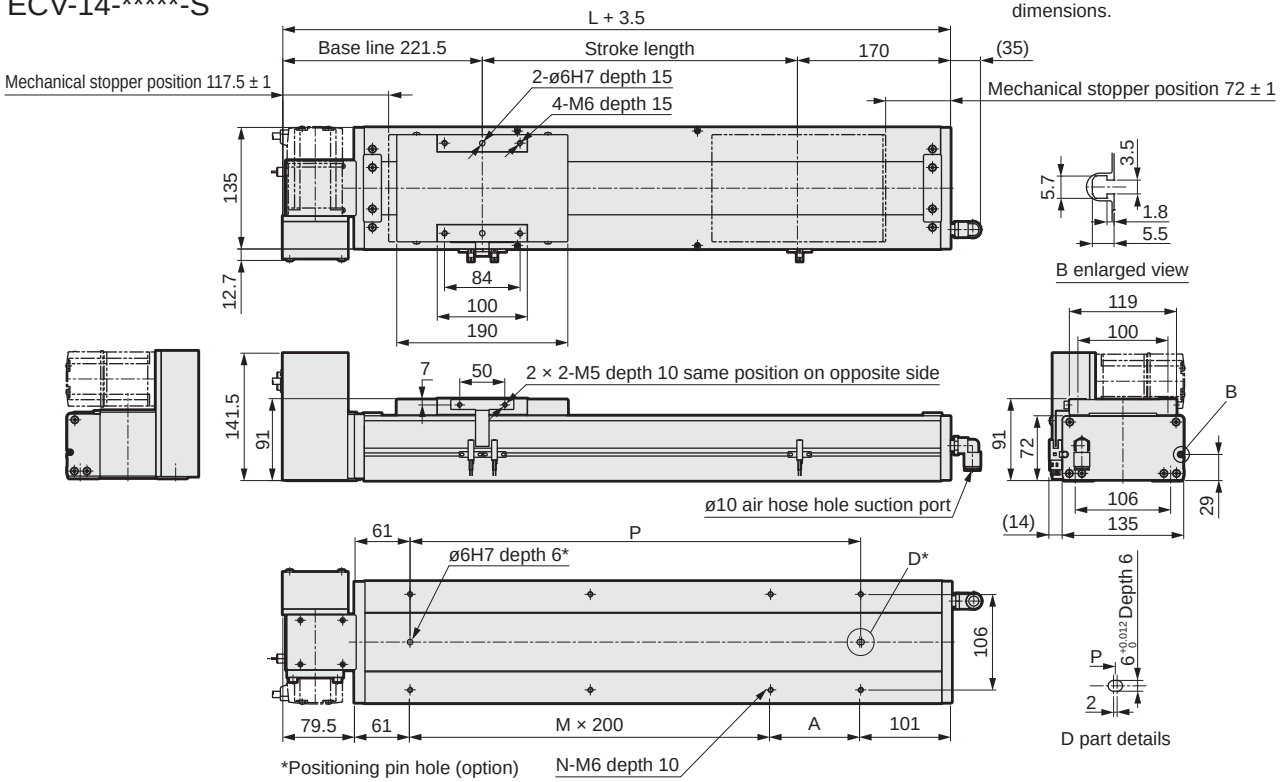

Stroke length (mm)	100	150	200	250	300	350	400	450	500	550	600	650	700	750	800	850	900	950	1000	1050	1100	1150	1200	1250	1300	1350	1400	1450	1500	1550
L	488	538	588	638	688	738	788	838	888	938	988	1038	1088	1138	1188	1238	1288	1338	1388	1438	1488	1538	1588	1638	1688	1738	1788	1838	1888	1938
A	50	100	150	200	50	100	150	200	50	100	150	200	50	100	150	200	50	100	150	200	50	100	150	200	50	100	150	200	50	100
M	1	1	1	1	2	2	2	2	3	3	3	3	4	4	4	4	5	5	5	5	6	6	6	6	7	7	7	7	8	8
N	6	6	6	6	8	8	8	8	10	10	10	10	12	12	12	12	14	14	14	14	16	16	16	16	18	18	18	18	20	20
P	250	300	350	400	450	500	550	600	650	700	750	800	850	900	950	1000	1050	1100	1150	1200	1250	1300	1350	1400	1450	1500	1550	1600	1650	1700
Weight (kg)	11.6	12.0	12.5	13.0	13.5	14.0	14.4	15.0	15.4	16.0	16.4	16.9	17.4	17.9	18.4	18.9	19.4	19.9	20.3	20.9	21.5	22.1	22.7	23.3	23.9	24.5	25.1	25.7	26.3	26.9

Stroke length (mm)	1600	1650	1700	1750	1800	1850	1900	1950	2000	2050	2100	2150	2200	2250	2300	2350	2400	2450	2500	2550	2600	2650	2700	2750	2800	2850	2900	2950	3000	3050
L	1988	2038	2088	2138	2188	2238	2288	2338	2388	2438	2488	2538	2588	2638	2688	2738	2788	2838	2888	2938	2988	3038	3088	3138	3188	3238	3288	3338	3388	3438
A	150	200	50	100	150	200	50	100	150	200	50	100	150	200	50	100	150	200	50	100	150	200	50	100	150	200	50	100	150	200
M	8	8	9	9	9	9	10	10	10	10	11	11	11	11	12	12	12	12	13	13	13	13	14	14	14	14	15	15	15	15
N	20	20	22	22	22	22	24	24	24	24	26	26	26	26	28	28	28	28	30	30	30	30	32	32	32	32	34	34	34	34
P	1750	1800	1850	1900	1950	2000	2050	2100	2150	2200	2250	2300	2350	2400	2450	2500	2550	2600	2650	2700	2750	2800	2850	2900	2950	3000	3050	3100	3150	3200
Weight (kg)	27.5	28.1	28.7	29.3	29.9	30.5	31.1	31.7	32.3	32.9	33.5	34.1	34.7	35.3	35.9	36.5	37.1	37.7	38.3	38.9	39.5	40.1	40.7	41.3	41.5	42.5	43.1	43.7	44.3	44.9

Motor mounting part

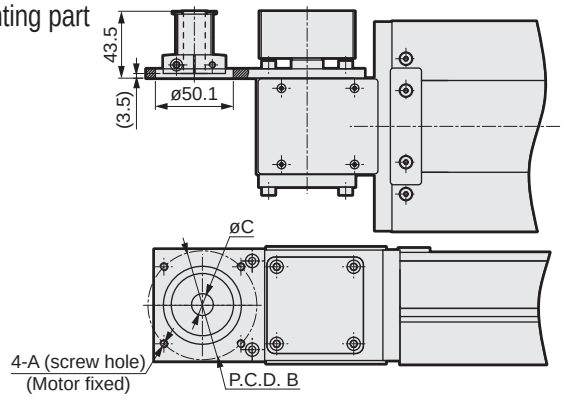

Mounted motor specification		A	B	C	Motor mounting bolt
M	200 W	M5	ø70	ø14	4-M5 × L12
Y	200 W	M5	ø70	ø14	4-M5 × L12
P	200 W	M4	ø70	ø11	4-M4 × L12
F	200 W	M5	ø70	ø9	4-M5 × L12

List of attachments

[Motor mounting parts]

Mounted motor specification	Timing belt, pulley	Fitting	Motor capacity	Motor mounting bolt	
				Size	Quantity
M	Included at shipment	Included at shipment	200 W	M5	4
Y				M5	4
P				M4	4
F				M5	4

*Refer to page 452 for fitting details.

[Origin sensor/Limit sensor]

Manufacturer	Model	Quantity
OMRON Corporation	EE-SX672	3

*Refer to page 448 for sensor specifications.

Dimensions Motor right bottom mounting

● ECV-14-*****-T

· Refer to page 450 for grease nipple dimensions.

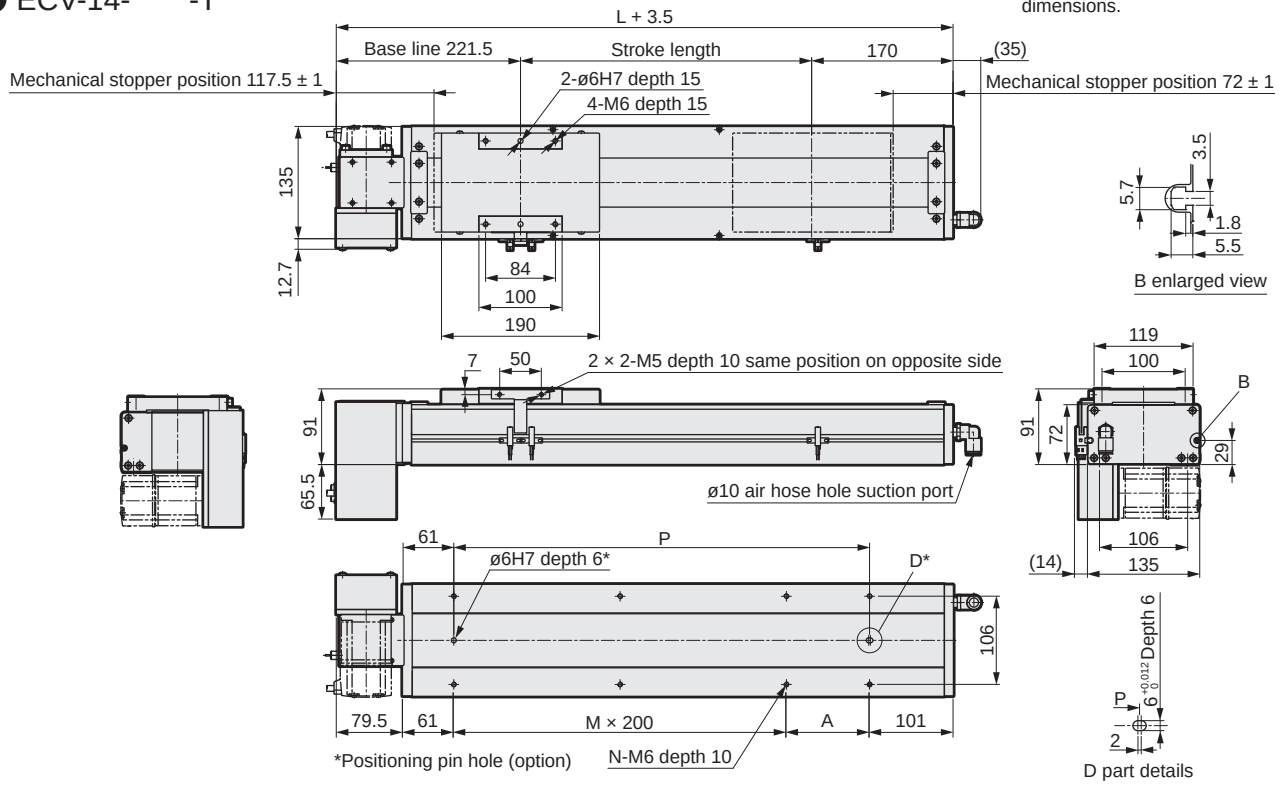

Stroke length (mm)	100	150	200	250	300	350	400	450	500	550	600	650	700	750	800	850	900	950	1000	1050	1100	1150	1200	1250	1300	1350	1400	1450	1500	1550
L	488	538	588	638	688	738	788	838	888	938	988	1038	1088	1138	1188	1238	1288	1338	1388	1438	1488	1538	1588	1638	1688	1738	1788	1838	1888	1938
A	50	100	150	200	50	100	150	200	50	100	150	200	50	100	150	200	50	100	150	200	50	100	150	200	50	100	150	200	50	100
M	1	1	1	1	2	2	2	2	3	3	3	3	4	4	4	4	5	5	5	5	6	6	6	6	7	7	7	7	8	8
N	6	6	6	6	8	8	8	8	10	10	10	10	12	12	12	12	14	14	14	14	16	16	16	16	18	18	18	18	20	20
P	250	300	350	400	450	500	550	600	650	700	750	800	850	900	950	1000	1050	1100	1150	1200	1250	1300	1350	1400	1450	1500	1550	1600	1650	1700
Weight (kg)	11.6	12.0	12.5	13.0	13.5	14.0	14.4	15.0	15.4	16.0	16.4	16.9	17.4	17.9	18.4	18.9	19.4	19.9	20.3	20.9	21.5	22.1	22.7	23.3	23.9	24.5	25.1	25.7	26.3	26.9

Stroke length (mm)	1600	1650	1700	1750	1800	1850	1900	1950	2000	2050	2100	2150	2200	2250	2300	2350	2400	2450	2500	2550	2600	2650	2700	2750	2800	2850	2900	2950	3000	3050
L	1988	2038	2088	2138	2188	2238	2288	2338	2388	2438	2488	2538	2588	2638	2688	2738	2788	2838	2888	2938	2988	3038	3088	3138	3188	3238	3288	3338	3388	3438
A	150	200	50	100	150	200	50	100	150	200	50	100	150	200	50	100	150	200	50	100	150	200	50	100	150	200	50	100	150	200
M	8	8	9	9	9	9	10	10	10	10	11	11	11	11	12	12	12	12	13	13	13	13	14	14	14	14	15	15	15	15
N	20	20	22	22	22	22	24	24	24	24	26	26	26	26	28	28	28	28	30	30	30	30	32	32	32	32	34	34	34	34
P	1750	1800	1850	1900	1950	2000	2050	2100	2150	2200	2250	2300	2350	2400	2450	2500	2550	2600	2650	2700	2750	2800	2850	2900	2950	3000	3050	3100	3150	3200
Weight (kg)	27.5	28.1	28.7	29.3	29.9	30.5	31.1	31.7	32.3	32.9	33.5	34.1	34.7	35.3	35.9	36.5	37.1	37.7	38.3	38.9	39.5	40.1	40.7	41.3	41.5	42.5	43.1	43.7	44.3	44.9

Motor mounting part

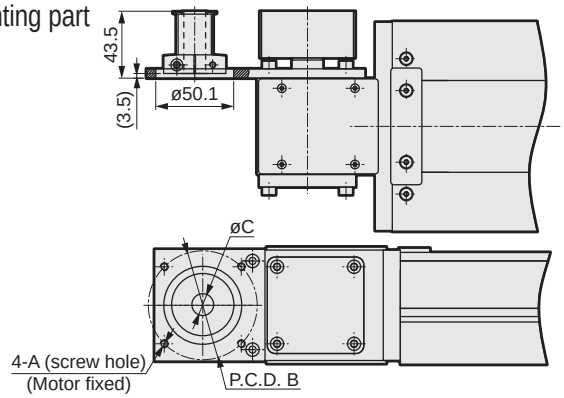

Mounted motor specification		A	B	C	Motor mounting bolt
M	200 W	M5	ø70	ø14	4-M5 × L12
Y	200 W	M5	ø70	ø14	4-M5 × L12
P	200 W	M4	ø70	ø11	4-M4 × L12
F	200 W	M5	ø70	ø9	4-M5 × L12

List of attachments

[Motor mounting parts]

Mounted motor specification	Timing belt, pulley	Fitting	Motor capacity	Motor mounting bolt	
				Size	Quantity
M	Included at shipment	Included at shipment	200 W	M5	4
Y				M5	4
P				M4	4
F				M5	4

*Refer to page 452 for fitting details.

[Origin sensor/Limit sensor]

Manufacturer	Model	Quantity
OMRON Corporation	EE-SX672	3

*Refer to page 448 for sensor specifications.

Dimensions Motor left-side mounting

● ECV-14-*****-L

· Refer to page 450 for grease nipple dimensions.

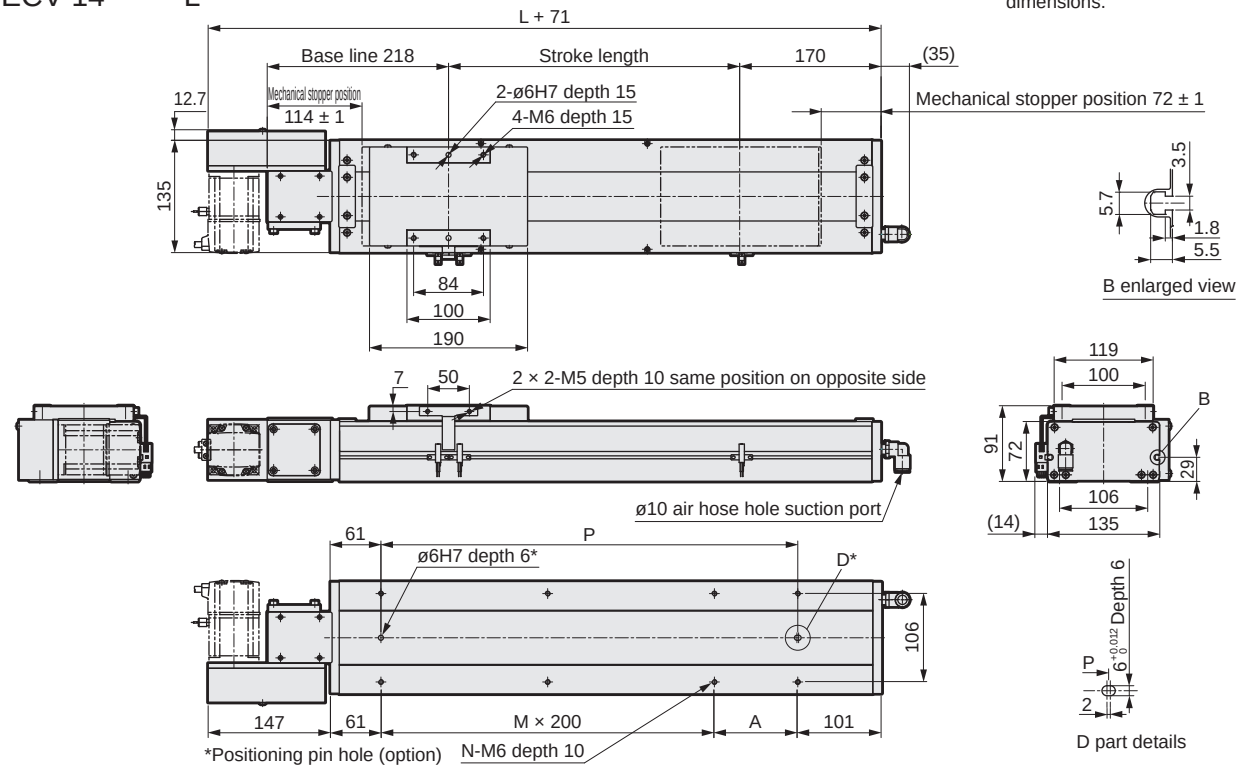

Stroke length (mm)	100	150	200	250	300	350	400	450	500	550	600	650	700	750	800	850	900	950	1000	1050	1100	1150	1200	1250	1300	1350	1400	1450	1500	1550
L	488	538	588	638	688	738	788	838	888	938	988	1038	1088	1138	1188	1238	1288	1338	1388	1438	1488	1538	1588	1638	1688	1738	1788	1838	1888	1938
A	50	100	150	200	50	100	150	200	50	100	150	200	50	100	150	200	50	100	150	200	50	100	150	200	50	100	150	200	50	100
M	1	1	1	1	2	2	2	2	3	3	3	3	4	4	4	4	5	5	5	5	6	6	6	6	7	7	7	7	8	8
N	6	6	6	6	8	8	8	8	10	10	10	10	12	12	12	12	14	14	14	14	16	16	16	16	18	18	18	18	20	20
P	250	300	350	400	450	500	550	600	650	700	750	800	850	900	950	1000	1050	1100	1150	1200	1250	1300	1350	1400	1450	1500	1550	1600	1650	1700
Weight (kg)	11.6	12.0	12.5	13.0	13.5	14.0	14.4	15.0	15.4	16.0	16.4	16.9	17.4	17.9	18.4	18.9	19.4	19.9	20.3	20.9	21.5	22.1	22.7	23.3	23.9	24.5	25.1	25.7	26.3	26.9

Stroke length (mm)	1600	1650	1700	1750	1800	1850	1900	1950	2000	2050	2100	2150	2200	2250	2300	2350	2400	2450	2500	2550	2600	2650	2700	2750	2800	2850	2900	2950	3000	3050
L	1988	2038	2088	2138	2188	2238	2288	2338	2388	2438	2488	2538	2588	2638	2688	2738	2788	2838	2888	2938	2988	3038	3088	3138	3188	3238	3288	3338	3388	3438
A	150	200	50	100	150	200	50	100	150	200	50	100	150	200	50	100	150	200	50	100	150	200	50	100	150	200	50	100	150	200
M	8	8	9	9	9	9	10	10	10	10	11	11	11	11	12	12	12	12	13	13	13	13	14	14	14	14	15	15	15	15
N	20	20	22	22	22	22	24	24	24	24	26	26	26	26	28	28	28	28	30	30	30	30	32	32	32	32	34	34	34	34
P	1750	1800	1850	1900	1950	2000	2050	2100	2150	2200	2250	2300	2350	2400	2450	2500	2550	2600	2650	2700	2750	2800	2850	2900	2950	3000	3050	3100	3150	3200
Weight (kg)	27.5	28.1	28.7	29.3	29.9	30.5	31.1	31.7	32.3	32.9	33.5	34.1	34.7	35.3	35.9	36.5	37.1	37.7	38.3	38.9	39.5	40.1	40.7	41.3	41.5	42.5	43.1	43.7	44.3	44.9

Motor mounting part

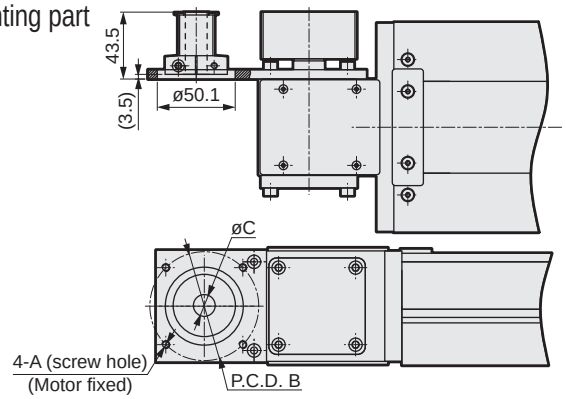

Mounted motor specification		A	B	C	Motor mounting bolt
M	200 W	M5	ø70	ø14	4-M5 × L12
Y	200 W	M5	ø70	ø14	4-M5 × L12
P	200 W	M4	ø70	ø11	4-M4 × L12
F	200 W	M5	ø70	ø9	4-M5 × L12

List of attachments

[Motor mounting parts]

Mounted motor specification	Timing belt, pulley	Fitting	Motor capacity	Motor mounting bolt	
				Size	Quantity
M	Included at shipment	Included at shipment	200 W	M5	4
Y				M5	4
P				M4	4
F				M5	4

*Refer to page 452 for fitting details.

[Origin sensor/Limit sensor]

Manufacturer	Model	Quantity
OMRON Corporation	EE-SX672	3

*Refer to page 448 for sensor specifications.

Dimensions Motor left top mounting

● ECV-14-*****-V

· Refer to page 450 for grease nipple dimensions.

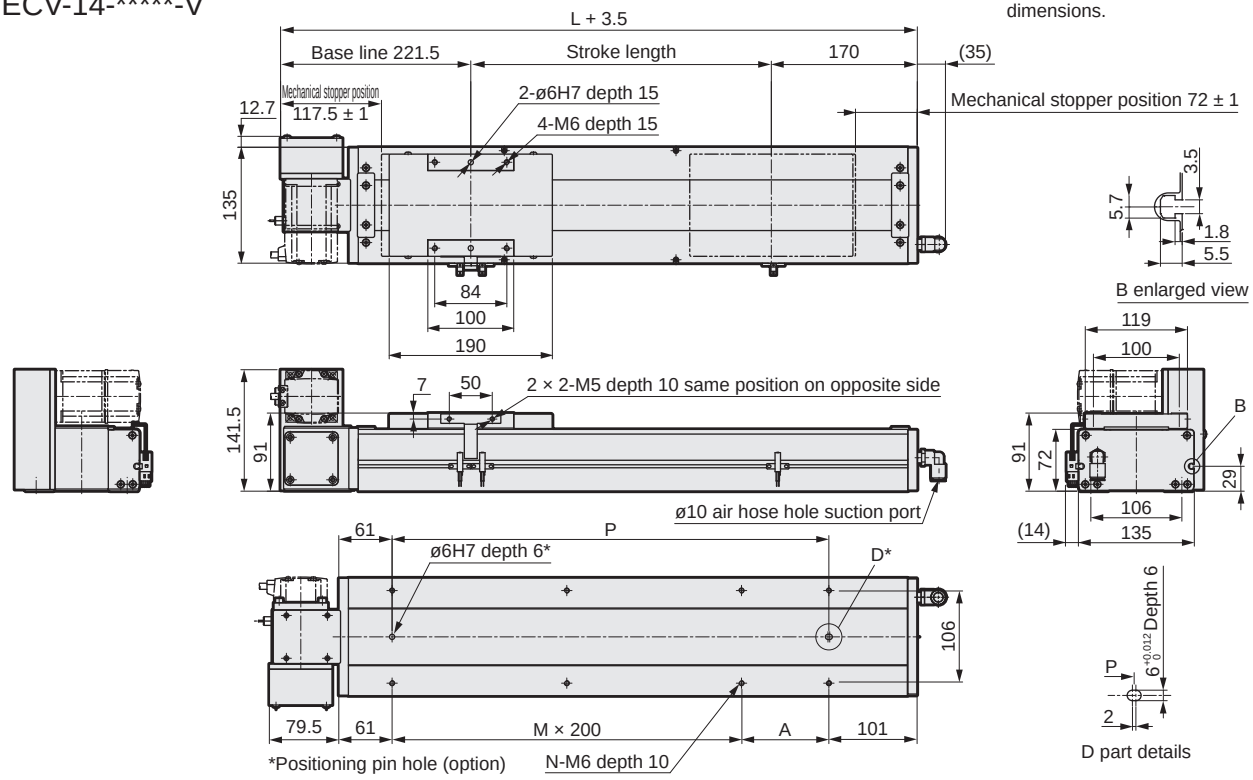

Stroke length (mm)	100	150	200	250	300	350	400	450	500	550	600	650	700	750	800	850	900	950	1000	1050	1100	1150	1200	1250	1300	1350	1400	1450	1500	1550
L	488	538	588	638	688	738	788	838	888	938	988	1038	1088	1138	1188	1238	1288	1338	1388	1438	1488	1538	1588	1638	1688	1738	1788	1838	1888	1938
A	50	100	150	200	50	100	150	200	50	100	150	200	50	100	150	200	50	100	150	200	50	100	150	200	50	100	150	200	50	100
M	1	1	1	1	2	2	2	2	3	3	3	3	4	4	4	4	5	5	5	5	6	6	6	6	7	7	7	7	8	8
N	6	6	6	6	8	8	8	8	10	10	10	10	12	12	12	12	14	14	14	14	16	16	16	16	18	18	18	18	20	20
P	250	300	350	400	450	500	550	600	650	700	750	800	850	900	950	1000	1050	1100	1150	1200	1250	1300	1350	1400	1450	1500	1550	1600	1650	1700
Weight (kg)	11.6	12.0	12.5	13.0	13.5	14.0	14.4	15.0	15.4	16.0	16.4	16.9	17.4	17.9	18.4	18.9	19.4	19.9	20.3	20.9	21.5	22.1	22.7	23.3	23.9	24.5	25.1	25.7	26.3	26.9

Stroke length (mm)	1600	1650	1700	1750	1800	1850	1900	1950	2000	2050	2100	2150	2200	2250	2300	2350	2400	2450	2500	2550	2600	2650	2700	2750	2800	2850	2900	2950	3000	3050
L	1988	2038	2088	2138	2188	2238	2288	2338	2388	2438	2488	2538	2588	2638	2688	2738	2788	2838	2888	2938	2988	3038	3088	3138	3188	3238	3288	3338	3388	3438
A	150	200	50	100	150	200	50	100	150	200	50	100	150	200	50	100	150	200	50	100	150	200	50	100	150	200	50	100	150	200
M	8	8	9	9	9	9	10	10	10	10	11	11	11	11	12	12	12	12	13	13	13	13	14	14	14	14	15	15	15	15
N	20	20	22	22	22	22	24	24	24	24	26	26	26	26	28	28	28	28	30	30	30	30	32	32	32	32	34	34	34	34
P	1750	1800	1850	1900	1950	2000	2050	2100	2150	2200	2250	2300	2350	2400	2450	2500	2550	2600	2650	2700	2750	2800	2850	2900	2950	3000	3050	3100	3150	3200
Weight (kg)	27.5	28.1	28.7	29.3	29.9	30.5	31.1	31.7	32.3	32.9	33.5	34.1	34.7	35.3	35.9	36.5	37.1	37.7	38.3	38.9	39.5	40.1	40.7	41.3	41.5	42.5	43.1	43.7	44.3	44.9

Motor mounting part

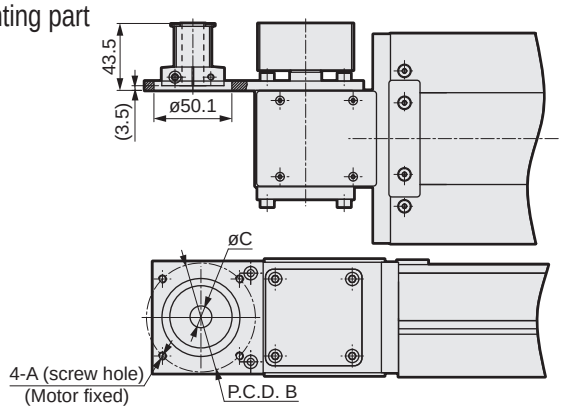

Mounted motor specification		A	B	C	Motor mounting bolt
M	200 W	M5	ø70	ø14	4-M5 × L12
Y	200 W	M5	ø70	ø14	4-M5 × L12
P	200 W	M4	ø70	ø11	4-M4 × L12
F	200 W	M5	ø70	ø9	4-M5 × L12

List of attachments

[Motor mounting parts]

Mounted motor specification	Timing belt, pulley	Fitting	Motor capacity	Motor mounting bolt	
				Size	Quantity
M	Included at shipment	Included at shipment	200 W	M5	4
Y				M5	4
P				M4	4
F				M5	4

*Refer to page 452 for fitting details.

[Origin sensor/Limit sensor]

Manufacturer	Model	Quantity
OMRON Corporation	EE-SX672	3

*Refer to page 448 for sensor specifications.

Dimensions Motor left bottom mounting

● ECV-14-*****-W

· Refer to page 450 for grease nipple dimensions.

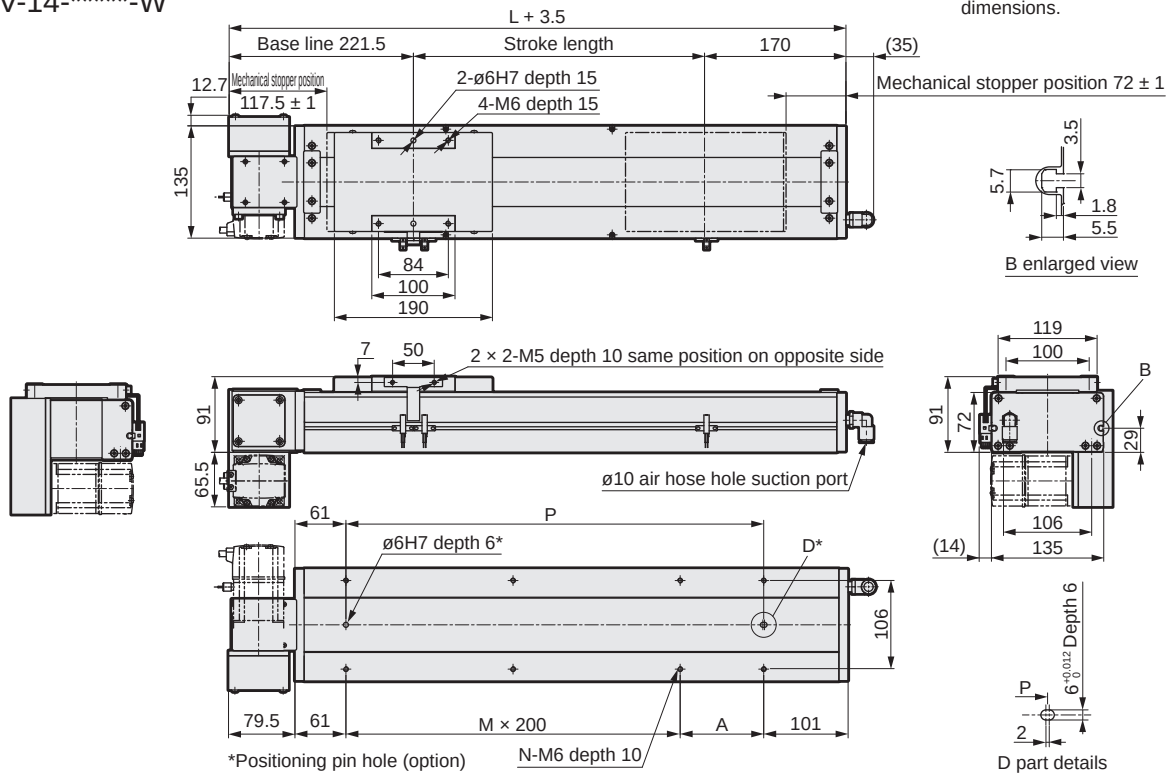

Stroke length (mm)	100	150	200	250	300	350	400	450	500	550	600	650	700	750	800	850	900	950	1000	1050	1100	1150	1200	1250	1300	1350	1400	1450	1500	1550
L	488	538	588	638	688	738	788	838	888	938	988	1038	1088	1138	1188	1238	1288	1338	1388	1438	1488	1538	1588	1638	1688	1738	1788	1838	1888	1938
A	50	100	150	200	50	100	150	200	50	100	150	200	50	100	150	200	50	100	150	200	50	100	150	200	50	100	150	200	50	100
M	1	1	1	1	2	2	2	2	3	3	3	3	4	4	4	4	5	5	5	5	6	6	6	6	7	7	7	7	8	8
N	6	6	6	6	8	8	8	8	10	10	10	10	12	12	12	12	14	14	14	14	16	16	16	16	18	18	18	18	20	20
P	250	300	350	400	450	500	550	600	650	700	750	800	850	900	950	1000	1050	1100	1150	1200	1250	1300	1350	1400	1450	1500	1550	1600	1650	1700
Weight (kg)	11.6	12.0	12.5	13.0	13.5	14.0	14.4	15.0	15.4	16.0	16.4	16.9	17.4	17.9	18.4	18.9	19.4	19.9	20.3	20.9	21.5	22.1	22.7	23.3	23.9	24.5	25.1	25.7	26.3	26.9

Stroke length (mm)	1600	1650	1700	1750	1800	1850	1900	1950	2000	2050	2100	2150	2200	2250	2300	2350	2400	2450	2500	2550	2600	2650	2700	2750	2800	2850	2900	2950	3000	3050
L	1988	2038	2088	2138	2188	2238	2288	2338	2388	2438	2488	2538	2588	2638	2688	2738	2788	2838	2888	2938	2988	3038	3088	3138	3188	3238	3288	3338	3388	3438
A	150	200	50	100	150	200	50	100	150	200	50	100	150	200	50	100	150	200	50	100	150	200	50	100	150	200	50	100	150	200
M	8	8	9	9	9	9	10	10	10	10	11	11	11	11	12	12	12	12	13	13	13	13	14	14	14	14	15	15	15	15
N	20	20	22	22	22	22	24	24	24	24	26	26	26	26	28	28	28	28	30	30	30	30	32	32	32	32	34	34	34	34
P	1750	1800	1850	1900	1950	2000	2050	2100	2150	2200	2250	2300	2350	2400	2450	2500	2550	2600	2650	2700	2750	2800	2850	2900	2950	3000	3050	3100	3150	3200
Weight (kg)	27.5	28.1	28.7	29.3	29.9	30.5	31.1	31.7	32.3	32.9	33.5	34.1	34.7	35.3	35.9	36.5	37.1	37.7	38.3	38.9	39.5	40.1	40.7	41.3	41.5	42.5	43.1	43.7	44.3	44.9

Motor mounting part

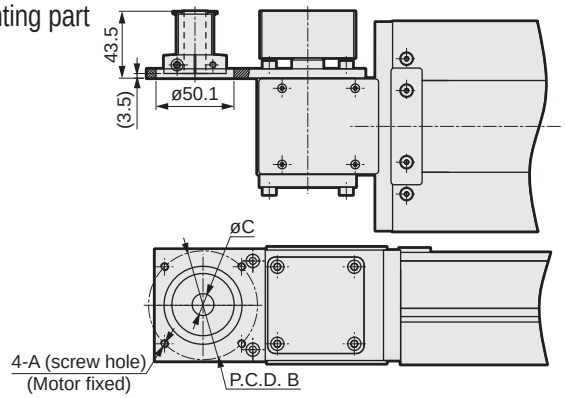

Mounted motor specification		A	B	C	Motor mounting bolt
M	200 W	M5	ø70	ø14	4-M5 × L12
Y	200 W	M5	ø70	ø14	4-M5 × L12
P	200 W	M4	ø70	ø11	4-M4 × L12
F	200 W	M5	ø70	ø9	4-M5 × L12

List of attachments

[Motor mounting parts]

Mounted motor specification	Timing belt, pulley	Fitting	Motor capacity	Motor mounting bolt	
				Size	Quantity
M	Included at shipment	Included at shipment	200 W	M5	4
Y				M5	4
P				M4	4
F				M5	4

*Refer to page 452 for fitting details.

[Origin sensor/Limit sensor]

Manufacturer	Model	Quantity
OMRON Corporation	EE-SX672	3

*Refer to page 448 for sensor specifications.

MEMO

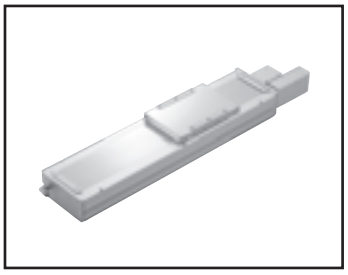

Electric actuator Belt

ECV-17 Series

Motor side mounting (left, right, bottom)

● Servo motor capacity: 400 W

How to order

ECV - 17 - 40 010 - R M 4 X N N N N

Ⓐ Body size

17	Body width 170 mm

Ⓑ Lead equivalent

40	40 mm

Ⓒ Stroke length

010 to 350	100 mm (In 50 mm increments) 3500 mm

Ⓓ Motor mounting direction *5

R	Right mounting
S	Right top mounting
T	Right bottom mounting
L	Left mounting
V	Left top mounting
W	Left bottom mounting

Ⓔ Mounted motor specification

M, Y, P, F	Select the mounted motor specification from the table below.

Ⓕ Motor capacity

4	400 W

Ⓖ Driving belt

X	Standard (rubber)
L	Low dust generation (urethane)

Ⓗ Origin sensor (1 pc) *1 *2 *3

N	None
C	Outside motor side
D	Outside motor opposite side

Ⓘ Limit sensor (2 pcs) *1 *2 *3

N	None
B	Outside

Ⓙ Grease nipple *3 *4 *5

N	None (Body mounting direction: Standard)
R	Right
L	Left

Ⓚ Positioning pin hole

N	None
P	Yes

Manufacturer	400 W
Mitsubishi Electric Corporation	M
Delta Electronics Co., Ltd.	M
Sanyo Denki Co., Ltd.	M
YASKAWA Electric Corporation	Y
Keyence Corporation	Y
Panasonic Corporation	P
OMRON Corporation	P
Fuji Electric Co., Ltd.	M
FANUC CORPORATION	F
Bosch Rexroth AG	P
Rockwell Automation, Inc.	M
SIEMENS AG	M

*Refer to page 403 for the motor model No.

*1: Origin sensor and limit sensor are available as a set. As it is both-or-nothing, select "None" for both.
*2: The user can adjust the sensor position. (Included at shipment)
*3: Contact CKD to use the origin sensor, limit sensor and grease nipple in the same direction.
*4: "Body mounting direction: Standard" here refers to mounting from the bottom side.
*5: When selecting motor mounting direction R, S, or T, grease nipple R cannot be selected. When selecting L, V, or W, grease nipple L cannot be selected.

Specifications

Applicable motor capacity		400 W servo motor
Drive method		Belt width 30 mm
Stroke length	mm	100 to 3500
Lead equivalent	mm	40
Max. load capacity *1	Horizontal kg	45
	Vertical kg	-
Max. speed	mm/s	2000
Rated thrust *1	N	204
Repeatability	mm	±0.04
Lost motion		0.1 mm or less
Dynamic allowable load	N	10102.1
Static allowable moment	N·m	MP: 1034, MY: 1032, MR: 908
Dynamic allowable moment	N·m	MP: 424.3, MY: 424.3, MR: 520.3
Operating ambient temperature, humidity		0 to 40°C (no freezing) 35 to 80% RH (no condensation)
Storage ambient temperature, humidity		-10 to 50°C (no freezing) 35 to 80% RH (no condensation)
Atmosphere		No corrosive gas, explosive gas, or dust

*1 Rated thrust and max. load capacity are guideline values assuming that the motor mounted will output the rated torque.

Stroke and max. speed

(mm/s)

Lead equivalent \ Stroke length	100 to 3500
40	2000

*The max. speed is the speed when the motor mounted by the customer can output a rotation speed of 3000 rpm.

Allowable overhang length

*Refer to page 446 for details.

Moment direction

MP MY MR

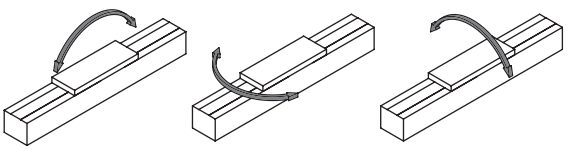

Dimensions Motor right-side mounting

● ECV-17-*****-R

· Refer to page 450 for grease nipple dimensions.

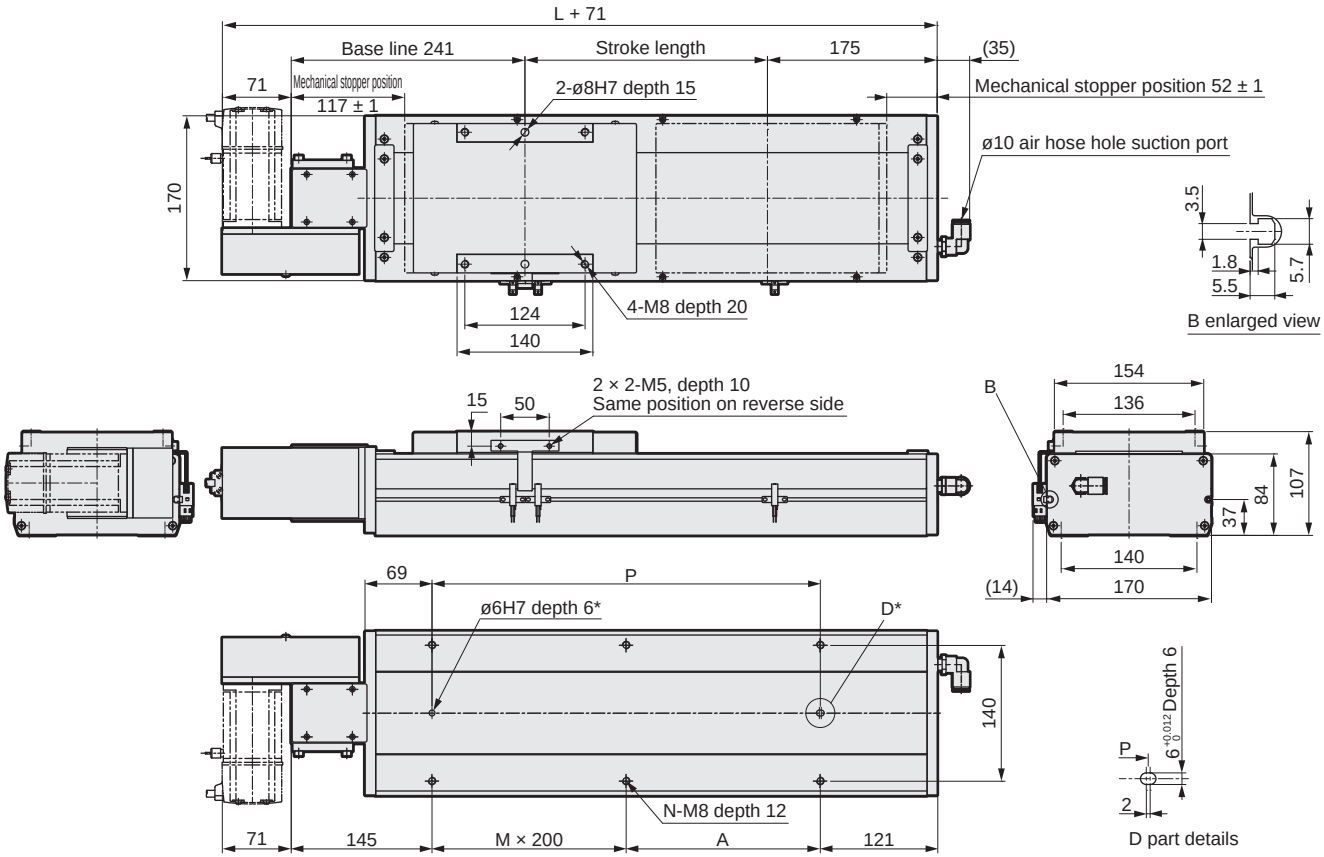

*Positioning pin hole (option)

Stroke length (mm)	100	150	200	250	300	350	400	450	500	550	600	650	700	750	800	850	900	950	1000	1050	1100	1150	1200
L	516	566	616	666	716	766	816	866	916	966	1016	1066	1116	1166	1216	1266	1316	1366	1416	1466	1516	1566	1616
A	50	100	150	200	50	100	150	200	50	100	150	200	50	100	150	200	50	100	150	200	50	100	150
M	1	1	1	1	2	2	2	2	3	3	3	3	4	4	4	4	5	5	5	5	6	6	6
N	6	6	6	6	8	8	8	8	10	10	10	10	12	12	12	12	14	14	14	14	16	16	16
P	250	300	350	400	450	500	550	600	650	700	750	800	850	900	950	1000	1050	1100	1150	1200	1250	1300	1350
Weight (kg)	15.0	16.8	17.6	18.4	19.1	19.9	20.7	21.5	22.2	23.0	23.8	24.6	25.3	26.1	26.9	27.7	28.4	29.2	30.0	30.8	31.6	32.4	33.2

Stroke length (mm)	1250	1300	1350	1400	1450	1500	1550	1600	1650	1700	1750	1800	1850	1900	1950	2000	2050	2100	2150	2200	2250	2300	2350
L	1666	1716	1766	1816	1866	1916	1966	2016	2066	2116	2166	2216	2266	2316	2366	2416	2466	2516	2566	2616	2666	2716	2766
A	200	50	100	150	200	50	100	150	200	50	100	150	200	50	100	150	200	50	100	150	200	50	100
M	6	7	7	7	7	8	8	8	8	9	9	9	9	10	10	10	10	11	11	11	11	12	12
N	16	18	18	18	18	20	20	20	20	22	22	22	22	24	24	24	24	26	26	26	26	28	28
P	1400	1450	1500	1550	1600	1650	1700	1750	1800	1850	1900	1950	2000	2050	2100	2150	2200	2250	2300	2350	2400	2450	2500
Weight (kg)	34.0	34.8	35.6	36.4	37.2	38.0	38.8	39.6	40.4	41.2	42.0	42.8	43.6	44.4	45.2	46.0	46.8	47.6	48.4	49.2	50.0	50.8	51.6

Stroke length (mm)	2400	2450	2500	2550	2600	2650	2700	2750	2800	2850	2900	2950	3000	3050	3100	3150	3200	3250	3300	3350	3400	3450	3500
L	2816	2866	2916	2966	3016	3066	3116	3166	3216	3266	3316	3366	3416	3466	3516	3566	3616	3666	3716	3766	3816	3866	3916
A	150	200	50	100	150	200	50	100	150	200	50	100	150	200	50	100	150	200	50	100	150	200	50
M	12	12	13	13	13	13	14	14	14	14	15	15	15	15	16	16	16	16	17	17	17	17	18
N	28	28	30	30	30	30	32	32	32	32	34	34	34	34	36	36	36	36	38	38	38	38	40
P	2550	2600	2650	2700	2750	2800	2850	2900	2950	3000	3050	3100	3150	3200	3250	3300	3350	3400	3450	3500	3550	3600	3650
Weight (kg)	52.4	53.2	54.0	54.8	55.6	56.4	57.2	58.0	58.8	59.6	60.4	61.2	62.0	62.8	63.6	64.4	65.2	66.0	66.8	67.6	68.4	69.2	70.0

*Refer to page 435 for motor mounting part dimensions and list of attachments.

Dimensions Motor right top mounting

● ECV-17-*****-S

· Refer to page 450 for grease nipple dimensions.

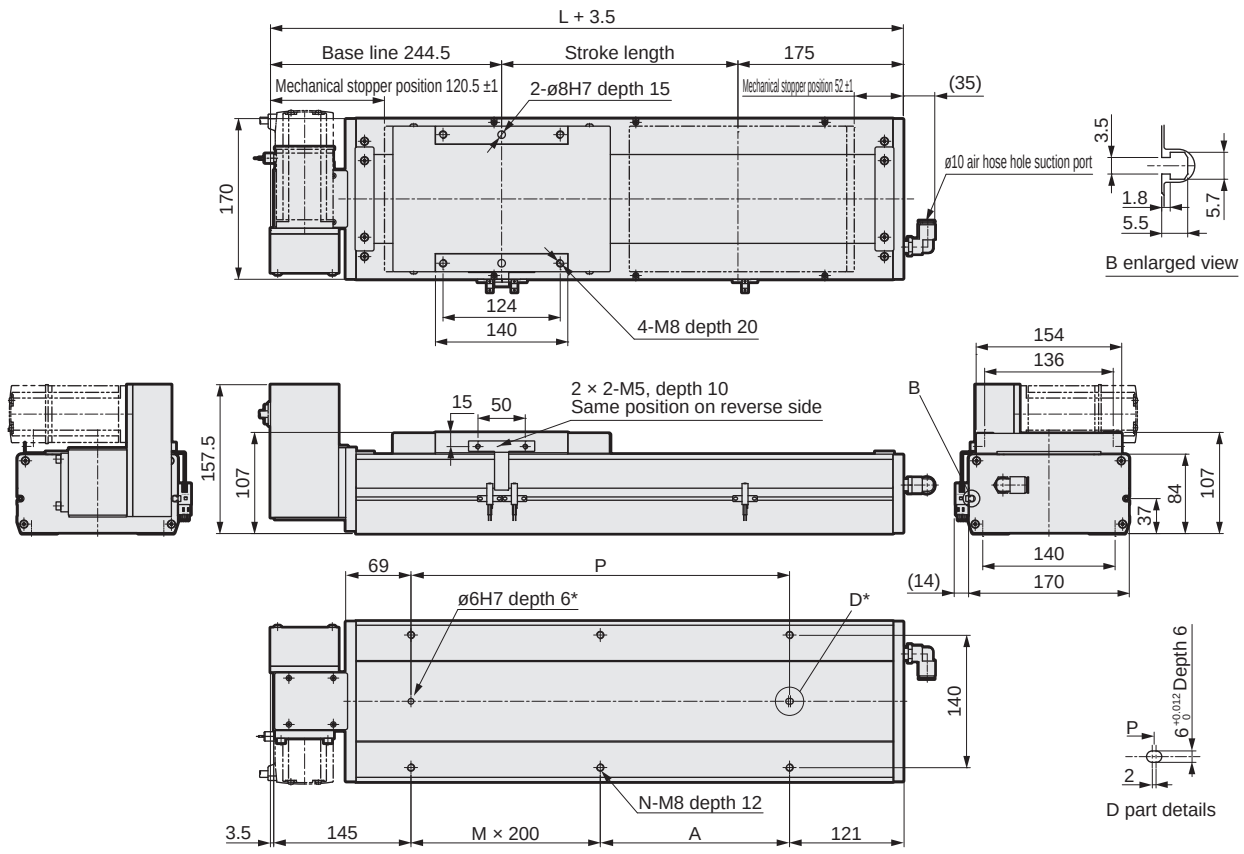

*Positioning pin hole (option)

Stroke length (mm)	100	150	200	250	300	350	400	450	500	550	600	650	700	750	800	850	900	950	1000	1050	1100	1150	1200
L	516	566	616	666	716	766	816	866	916	966	1016	1066	1116	1166	1216	1266	1316	1366	1416	1466	1516	1566	1616
A	50	100	150	200	50	100	150	200	50	100	150	200	50	100	150	200	50	100	150	200	50	100	150
M	1	1	1	1	2	2	2	2	3	3	3	3	4	4	4	4	5	5	5	5	6	6	6
N	6	6	6	6	8	8	8	8	10	10	10	10	12	12	12	12	14	14	14	14	16	16	16
P	250	300	350	400	450	500	550	600	650	700	750	800	850	900	950	1000	1050	1100	1150	1200	1250	1300	1350
Weight (kg)	15.0	16.8	17.6	18.4	19.1	19.9	20.7	21.5	22.2	23.0	23.8	24.6	25.3	26.1	26.9	27.7	28.4	29.2	30.0	30.8	31.6	32.4	33.2

Stroke length (mm)	1250	1300	1350	1400	1450	1500	1550	1600	1650	1700	1750	1800	1850	1900	1950	2000	2050	2100	2150	2200	2250	2300	2350
L	1666	1716	1766	1816	1866	1916	1966	2016	2066	2116	2166	2216	2266	2316	2366	2416	2466	2516	2566	2616	2666	2716	2766
A	200	50	100	150	200	50	100	150	200	50	100	150	200	50	100	150	200	50	100	150	200	50	100
M	6	7	7	7	7	8	8	8	8	9	9	9	9	10	10	10	10	11	11	11	11	12	12
N	16	18	18	18	18	20	20	20	20	22	22	22	22	24	24	24	24	26	26	26	26	28	28
P	1400	1450	1500	1550	1600	1650	1700	1750	1800	1850	1900	1950	2000	2050	2100	2150	2200	2250	2300	2350	2400	2450	2500
Weight (kg)	34.0	34.8	35.6	36.4	37.2	38.0	38.8	39.6	40.4	41.2	42.0	42.8	43.6	44.4	45.2	46.0	46.8	47.6	48.4	49.2	50.0	50.8	51.6

Stroke length (mm)	2400	2450	2500	2550	2600	2650	2700	2750	2800	2850	2900	2950	3000	3050	3100	3150	3200	3250	3300	3350	3400	3450	3500
L	2816	2866	2916	2966	3016	3066	3116	3166	3216	3266	3316	3366	3416	3466	3516	3566	3616	3666	3716	3766	3816	3866	3916
A	150	200	50	100	150	200	50	100	150	200	50	100	150	200	50	100	150	200	50	100	150	200	50
M	12	12	13	13	13	13	14	14	14	14	15	15	15	15	16	16	16	16	17	17	17	17	18
N	28	28	30	30	30	30	32	32	32	32	34	34	34	34	36	36	36	36	38	38	38	38	40
P	2550	2600	2650	2700	2750	2800	2850	2900	2950	3000	3050	3100	3150	3200	3250	3300	3350	3400	3450	3500	3550	3600	3650
Weight (kg)	52.4	53.2	54.0	54.8	55.6	56.4	57.2	58.0	58.8	59.6	60.4	61.2	62.0	62.8	63.6	64.4	65.2	66.0	66.8	67.6	68.4	69.2	70.0

*Refer to page 435 for motor mounting part dimensions and list of attachments.

Dimensions Motor right bottom mounting

● ECV-17-*****-T

· Refer to page 450 for grease nipple dimensions.

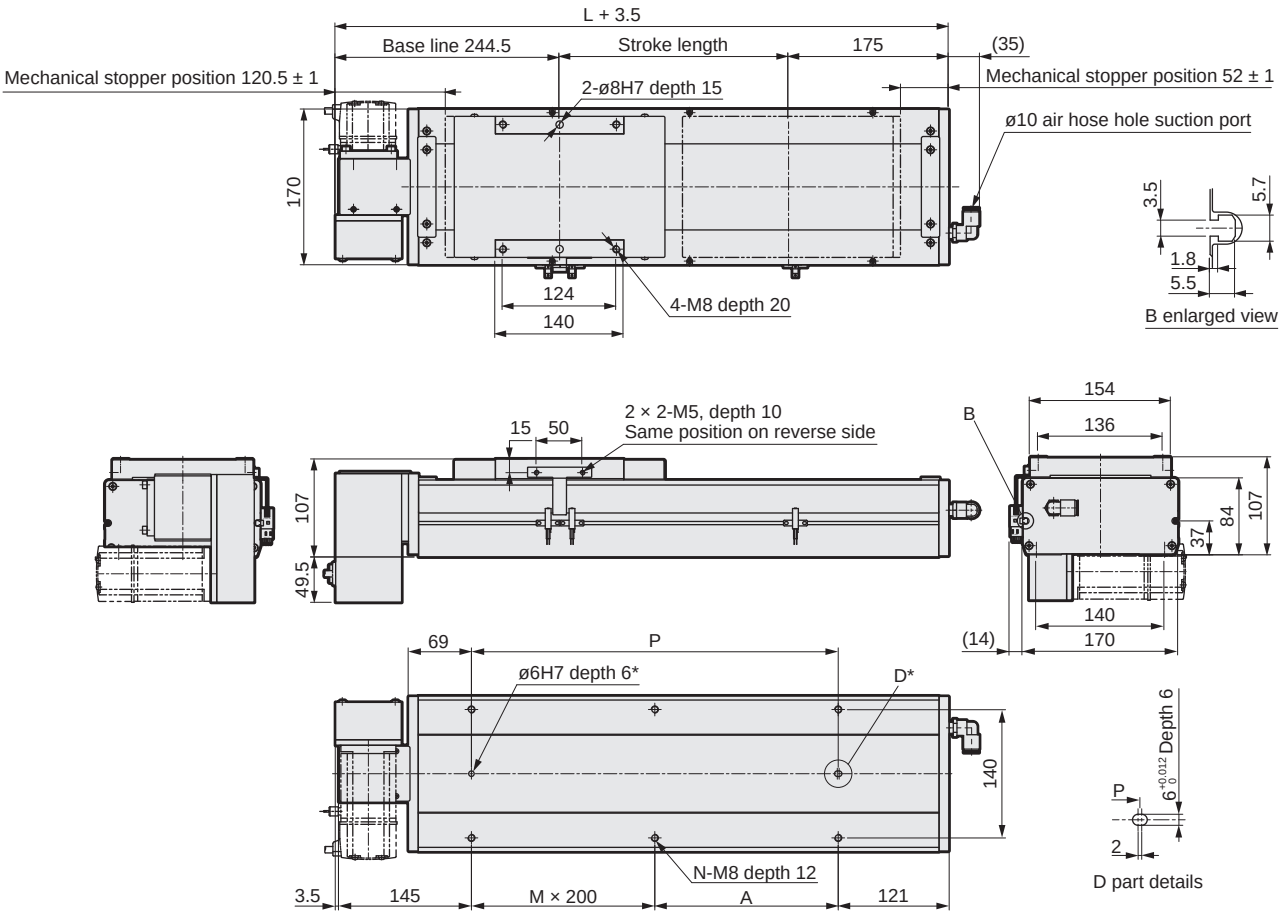

*Positioning pin hole (option)

Stroke length (mm)	100	150	200	250	300	350	400	450	500	550	600	650	700	750	800	850	900	950	1000	1050	1100	1150	1200
L	516	566	616	666	716	766	816	866	916	966	1016	1066	1116	1166	1216	1266	1316	1366	1416	1466	1516	1566	1616
A	50	100	150	200	50	100	150	200	50	100	150	200	50	100	150	200	50	100	150	200	50	100	150
M	1	1	1	1	2	2	2	2	3	3	3	3	4	4	4	4	5	5	5	5	6	6	6
N	6	6	6	6	8	8	8	8	10	10	10	10	12	12	12	12	14	14	14	14	16	16	16
P	250	300	350	400	450	500	550	600	650	700	750	800	850	900	950	1000	1050	1100	1150	1200	1250	1300	1350
Weight (kg)	15.0	16.8	17.6	18.4	19.1	19.9	20.7	21.5	22.2	23.0	23.8	24.6	25.3	26.1	26.9	27.7	28.4	29.2	30.0	30.8	31.6	32.4	33.2

Stroke length (mm)	1250	1300	1350	1400	1450	1500	1550	1600	1650	1700	1750	1800	1850	1900	1950	2000	2050	2100	2150	2200	2250	2300	2350
L	1666	1716	1766	1816	1866	1916	1966	2016	2066	2116	2166	2216	2266	2316	2366	2416	2466	2516	2566	2616	2666	2716	2766
A	200	50	100	150	200	50	100	150	200	50	100	150	200	50	100	150	200	50	100	150	200	50	100
M	6	7	7	7	7	8	8	8	8	9	9	9	9	10	10	10	10	11	11	11	11	12	12
N	16	18	18	18	18	20	20	20	20	22	22	22	22	24	24	24	24	26	26	26	26	28	28
P	1400	1450	1500	1550	1600	1650	1700	1750	1800	1850	1900	1950	2000	2050	2100	2150	2200	2250	2300	2350	2400	2450	2500
Weight (kg)	34.0	34.8	35.6	36.4	37.2	38.0	38.8	39.6	40.4	41.2	42.0	42.8	43.6	44.4	45.2	46.0	46.8	47.6	48.4	49.2	50.0	50.8	51.6

Stroke length (mm)	2400	2450	2500	2550	2600	2650	2700	2750	2800	2850	2900	2950	3000	3050	3100	3150	3200	3250	3300	3350	3400	3450	3500
L	2816	2866	2916	2966	3016	3066	3116	3166	3216	3266	3316	3366	3416	3466	3516	3566	3616	3666	3716	3766	3816	3866	3916
A	150	200	50	100	150	200	50	100	150	200	50	100	150	200	50	100	150	200	50	100	150	200	50
M	12	12	13	13	13	13	14	14	14	14	15	15	15	15	16	16	16	16	17	17	17	17	18
N	28	28	30	30	30	30	32	32	32	32	34	34	34	34	36	36	36	36	38	38	38	38	40
P	2550	2600	2650	2700	2750	2800	2850	2900	2950	3000	3050	3100	3150	3200	3250	3300	3350	3400	3450	3500	3550	3600	3650
Weight (kg)	52.4	53.2	54.0	54.8	55.6	56.4	57.2	58.0	58.8	59.6	60.4	61.2	62.0	62.8	63.6	64.4	65.2	66.0	66.8	67.6	68.4	69.2	70.0

*Refer to page 435 for motor mounting part dimensions and list of attachments.

Dimensions Motor left-side mounting

● ECV-17-*****-L

· Refer to page 450 for grease nipple dimensions.

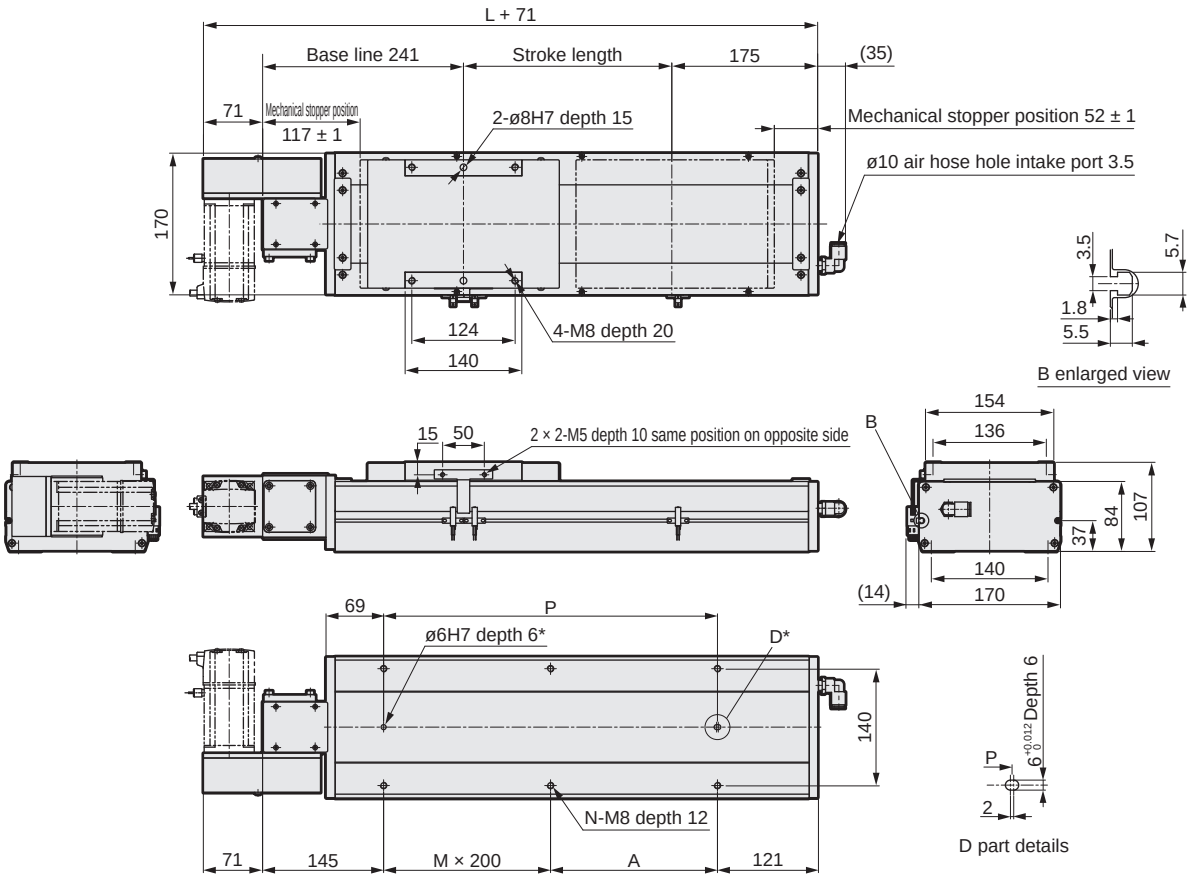

*Positioning pin hole (option)

Stroke length (mm)	100	150	200	250	300	350	400	450	500	550	600	650	700	750	800	850	900	950	1000	1050	1100	1150	1200
L	516	566	616	666	716	766	816	866	916	966	1016	1066	1116	1166	1216	1266	1316	1366	1416	1466	1516	1566	1616
A	50	100	150	200	50	100	150	200	50	100	150	200	50	100	150	200	50	100	150	200	50	100	150
M	1	1	1	1	2	2	2	2	3	3	3	3	4	4	4	4	5	5	5	5	6	6	6
N	6	6	6	6	8	8	8	8	10	10	10	10	12	12	12	12	14	14	14	14	16	16	16
P	250	300	350	400	450	500	550	600	650	700	750	800	850	900	950	1000	1050	1100	1150	1200	1250	1300	1350
Weight (kg)	15.0	16.8	17.6	18.4	19.1	19.9	20.7	21.5	22.2	23.0	23.8	24.6	25.3	26.1	26.9	27.7	28.4	29.2	30.0	30.8	31.6	32.4	33.2

Stroke length (mm)	1250	1300	1350	1400	1450	1500	1550	1600	1650	1700	1750	1800	1850	1900	1950	2000	2050	2100	2150	2200	2250	2300	2350
L	1666	1716	1766	1816	1866	1916	1966	2016	2066	2116	2166	2216	2266	2316	2366	2416	2466	2516	2566	2616	2666	2716	2766
A	200	50	100	150	200	50	100	150	200	50	100	150	200	50	100	150	200	50	100	150	200	50	100
M	6	7	7	7	7	8	8	8	8	9	9	9	9	10	10	10	10	11	11	11	11	12	12
N	16	18	18	18	18	20	20	20	20	22	22	22	22	24	24	24	24	26	26	26	26	28	28
P	1400	1450	1500	1550	1600	1650	1700	1750	1800	1850	1900	1950	2000	2050	2100	2150	2200	2250	2300	2350	2400	2450	2500
Weight (kg)	34.0	34.8	35.6	36.4	37.2	38.0	38.8	39.6	40.4	41.2	42.0	42.8	43.6	44.4	45.2	46.0	46.8	47.6	48.4	49.2	50.0	50.8	51.6

Stroke length (mm)	2400	2450	2500	2550	2600	2650	2700	2750	2800	2850	2900	2950	3000	3050	3100	3150	3200	3250	3300	3350	3400	3450	3500
L	2816	2866	2916	2966	3016	3066	3116	3166	3216	3266	3316	3366	3416	3466	3516	3566	3616	3666	3716	3766	3816	3866	3916
A	150	200	50	100	150	200	50	100	150	200	50	100	150	200	50	100	150	200	50	100	150	200	50
M	12	12	13	13	13	13	14	14	14	14	15	15	15	15	16	16	16	16	17	17	17	17	18
N	28	28	30	30	30	30	32	32	32	32	34	34	34	34	36	36	36	36	38	38	38	38	40
P	2550	2600	2650	2700	2750	2800	2850	2900	2950	3000	3050	3100	3150	3200	3250	3300	3350	3400	3450	3500	3550	3600	3650
Weight (kg)	52.4	53.2	54.0	54.8	55.6	56.4	57.2	58.0	58.8	59.6	60.4	61.2	62.0	62.8	63.6	64.4	65.2	66.0	66.8	67.6	68.4	69.2	70.0

*Refer to page 435 for motor mounting part dimensions and list of attachments.

Dimensions Motor left top mounting

● ECV-17-*****-V

· Refer to page 450 for grease nipple dimensions.

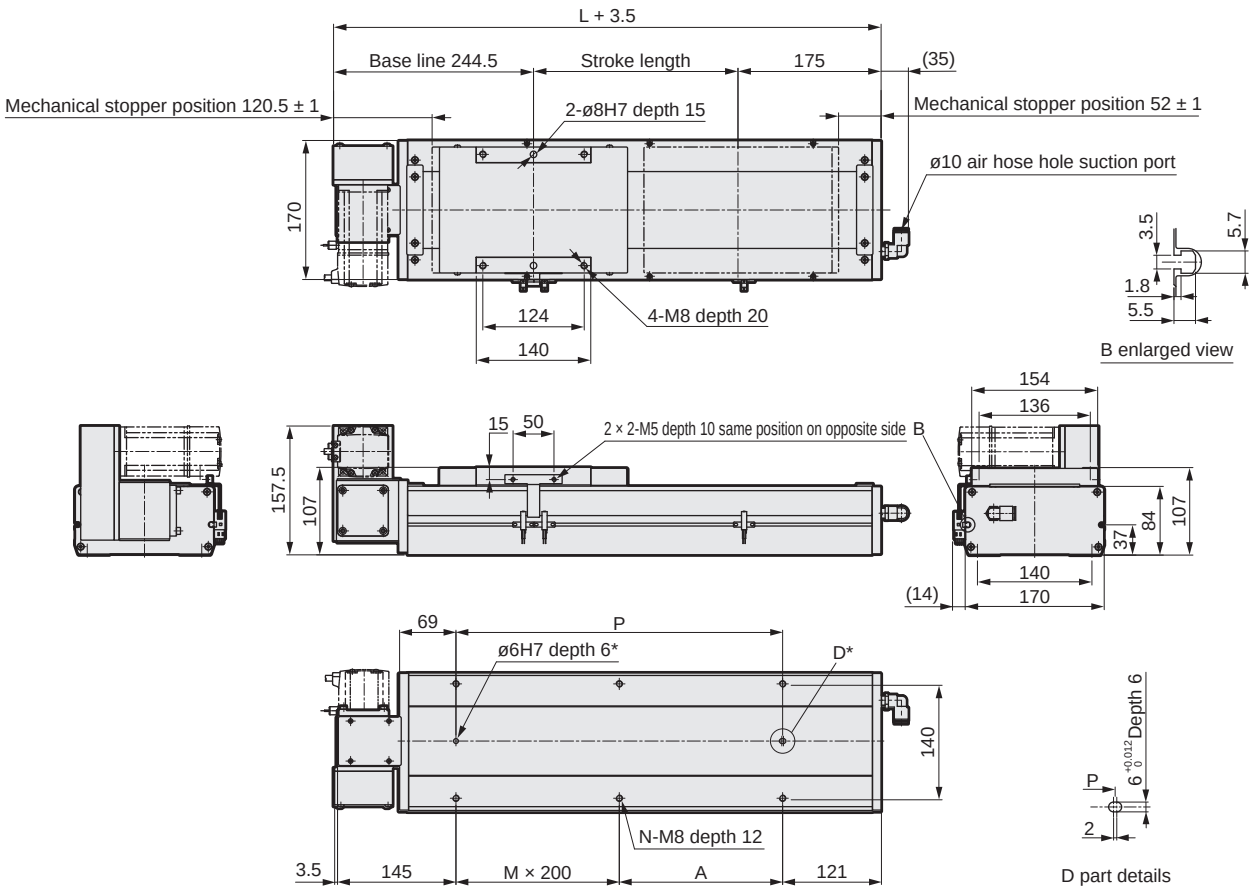

*Positioning pin hole (option)

Stroke length (mm)	100	150	200	250	300	350	400	450	500	550	600	650	700	750	800	850	900	950	1000	1050	1100	1150	1200
L	516	566	616	666	716	766	816	866	916	966	1016	1066	1116	1166	1216	1266	1316	1366	1416	1466	1516	1566	1616
A	50	100	150	200	50	100	150	200	50	100	150	200	50	100	150	200	50	100	150	200	50	100	150
M	1	1	1	1	2	2	2	2	3	3	3	3	4	4	4	4	5	5	5	5	6	6	6
N	6	6	6	6	8	8	8	8	10	10	10	10	12	12	12	12	14	14	14	14	16	16	16
P	250	300	350	400	450	500	550	600	650	700	750	800	850	900	950	1000	1050	1100	1150	1200	1250	1300	1350
Weight (kg)	15.0	16.8	17.6	18.4	19.1	19.9	20.7	21.5	22.2	23.0	23.8	24.6	25.3	26.1	26.9	27.7	28.4	29.2	30.0	30.8	31.6	32.4	33.2

Stroke length (mm)	1250	1300	1350	1400	1450	1500	1550	1600	1650	1700	1750	1800	1850	1900	1950	2000	2050	2100	2150	2200	2250	2300	2350
L	1666	1716	1766	1816	1866	1916	1966	2016	2066	2116	2166	2216	2266	2316	2366	2416	2466	2516	2566	2616	2666	2716	2766
A	200	50	100	150	200	50	100	150	200	50	100	150	200	50	100	150	200	50	100	150	200	50	100
M	6	7	7	7	7	8	8	8	8	9	9	9	9	10	10	10	10	11	11	11	11	12	12
N	16	18	18	18	18	20	20	20	20	22	22	22	22	24	24	24	24	26	26	26	26	28	28
P	1400	1450	1500	1550	1600	1650	1700	1750	1800	1850	1900	1950	2000	2050	2100	2150	2200	2250	2300	2350	2400	2450	2500
Weight (kg)	34.0	34.8	35.6	36.4	37.2	38.0	38.8	39.6	40.4	41.2	42.0	42.8	43.6	44.4	45.2	46.0	46.8	47.6	48.4	49.2	50.0	50.8	51.6

Stroke length (mm)	2400	2450	2500	2550	2600	2650	2700	2750	2800	2850	2900	2950	3000	3050	3100	3150	3200	3250	3300	3350	3400	3450	3500
L	2816	2866	2916	2966	3016	3066	3116	3166	3216	3266	3316	3366	3416	3466	3516	3566	3616	3666	3716	3766	3816	3866	3916
A	150	200	50	100	150	200	50	100	150	200	50	100	150	200	50	100	150	200	50	100	150	200	50
M	12	12	13	13	13	13	14	14	14	14	15	15	15	15	16	16	16	16	17	17	17	17	18
N	28	28	30	30	30	30	32	32	32	32	34	34	34	34	36	36	36	36	38	38	38	38	40
P	2550	2600	2650	2700	2750	2800	2850	2900	2950	3000	3050	3100	3150	3200	3250	3300	3350	3400	3450	3500	3550	3600	3650
Weight (kg)	52.4	53.2	54.0	54.8	55.6	56.4	57.2	58.0	58.8	59.6	60.4	61.2	62.0	62.8	63.6	64.4	65.2	66.0	66.8	67.6	68.4	69.2	70.0

*Refer to page 435 for motor mounting part dimensions and list of attachments.

Dimensions Motor left bottom mounting

● ECV-17-*****-W

· Refer to page 450 for grease nipple dimensions.

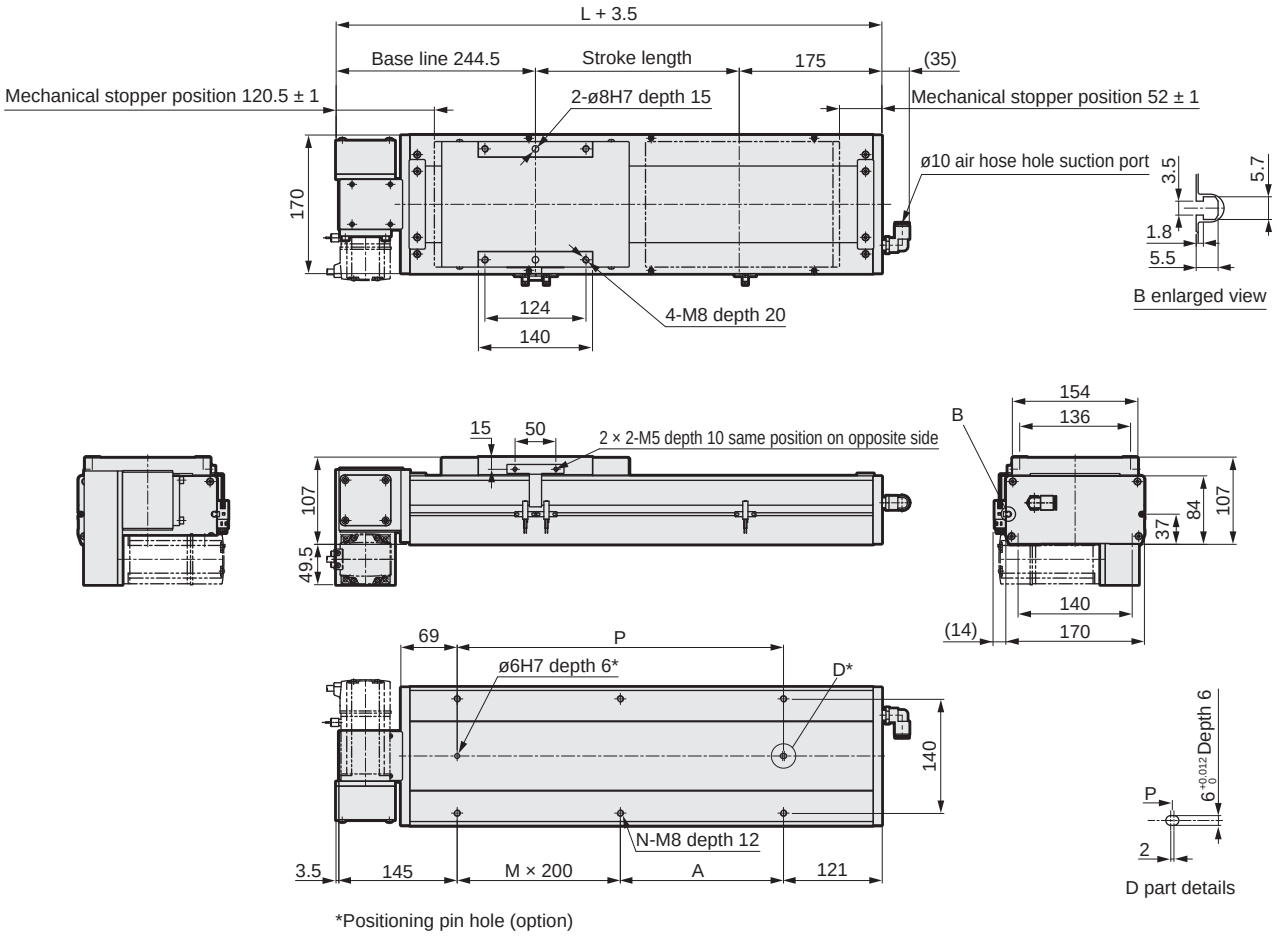

*Positioning pin hole (option)

Stroke length (mm)	100	150	200	250	300	350	400	450	500	550	600	650	700	750	800	850	900	950	1000	1050	1100	1150	1200
L	516	566	616	666	716	766	816	866	916	966	1016	1066	1116	1166	1216	1266	1316	1366	1416	1466	1516	1566	1616
A	50	100	150	200	50	100	150	200	50	100	150	200	50	100	150	200	50	100	150	200	50	100	150
M	1	1	1	1	2	2	2	2	3	3	3	3	4	4	4	4	5	5	5	5	6	6	6
N	6	6	6	6	8	8	8	8	10	10	10	10	12	12	12	12	14	14	14	14	16	16	16
P	250	300	350	400	450	500	550	600	650	700	750	800	850	900	950	1000	1050	1100	1150	1200	1250	1300	1350
Weight (kg)	15.0	16.8	17.6	18.4	19.1	19.9	20.7	21.5	22.2	23.0	23.8	24.6	25.3	26.1	26.9	27.7	28.4	29.2	30.0	30.8	31.6	32.4	33.2

Stroke length (mm)	1250	1300	1350	1400	1450	1500	1550	1600	1650	1700	1750	1800	1850	1900	1950	2000	2050	2100	2150	2200	2250	2300	2350
L	1666	1716	1766	1816	1866	1916	1966	2016	2066	2116	2166	2216	2266	2316	2366	2416	2466	2516	2566	2616	2666	2716	2766
A	200	50	100	150	200	50	100	150	200	50	100	150	200	50	100	150	200	50	100	150	200	50	100
M	6	7	7	7	7	8	8	8	8	9	9	9	9	10	10	10	10	11	11	11	11	12	12
N	16	18	18	18	18	20	20	20	20	22	22	22	22	24	24	24	24	26	26	26	26	28	28
P	1400	1450	1500	1550	1600	1650	1700	1750	1800	1850	1900	1950	2000	2050	2100	2150	2200	2250	2300	2350	2400	2450	2500
Weight (kg)	34.0	34.8	35.6	36.4	37.2	38.0	38.8	39.6	40.4	41.2	42.0	42.8	43.6	44.4	45.2	46.0	46.8	47.6	48.4	49.2	50.0	50.8	51.6

Stroke length (mm)	2400	2450	2500	2550	2600	2650	2700	2750	2800	2850	2900	2950	3000	3050	3100	3150	3200	3250	3300	3350	3400	3450	3500
L	2816	2866	2916	2966	3016	3066	3116	3166	3216	3266	3316	3366	3416	3466	3516	3566	3616	3666	3716	3766	3816	3866	3916
A	150	200	50	100	150	200	50	100	150	200	50	100	150	200	50	100	150	200	50	100	150	200	50
M	12	12	13	13	13	13	14	14	14	14	15	15	15	15	16	16	16	16	17	17	17	17	18
N	28	28	30	30	30	30	32	32	32	32	34	34	34	34	36	36	36	36	38	38	38	38	40
P	2550	2600	2650	2700	2750	2800	2850	2900	2950	3000	3050	3100	3150	3200	3250	3300	3350	3400	3450	3500	3550	3600	3650
Weight (kg)	52.4	53.2	54.0	54.8	55.6	56.4	57.2	58.0	58.8	59.6	60.4	61.2	62.0	62.8	63.6	64.4	65.2	66.0	66.8	67.6	68.4	69.2	70.0

*Refer to page 435 for motor mounting part dimensions and list of attachments.

Motor mounting part

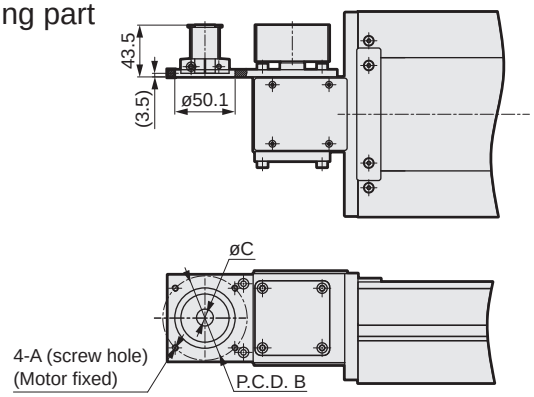

Mounted motor specification		A	B	C	Motor mounting bolt
M	400 W	M5	ø70	ø14	4-M5 × L12
Y	400 W	M5	ø70	ø14	4-M5 × L12
P	400 W	M4	ø70	ø14	4-M4 × L12
F	400 W	M5	ø70	ø14	4-M5 × L12

List of attachments

[Motor mounting parts]

Mounted motor specification	Timing belt, pulley	Fitting	Motor capacity	Motor mounting bolt	
				Size	Quantity
M	Included at shipment	Included at shipment	400 W	M5	4
Y				M5	4
P				M4	4
F				M5	4

*Refer to page 452 for fitting details.

[Origin sensor/Limit sensor]

Manufacturer	Model	Quantity
OMRON Corporation	EE-SX672	3

*Refer to page 448 for sensor specifications.

MEMO

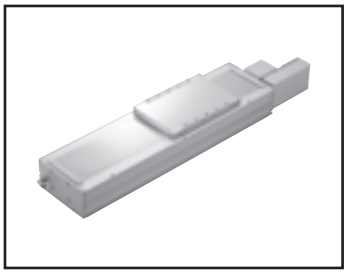

Electric actuator Belt

ECV-22 Series

Motor side mounting (left, right, bottom)

● Servo motor capacity: 750 W

How to order

ECV - 22 - 40 - 010 - R M 8 X N N N N

(A) (B) (C) (D) (E) (F) (G) (H) (I) (J) (K)

(A) Body size

22	Body width 220 mm

(B) Lead equivalent

40	40 mm

(C) Stroke length

010 to 340	100 mm (In 50 mm increments) 3400 mm

(D) Motor mounting direction *5

R	Right mounting
S	Right top mounting
T	Right bottom mounting
L	Left mounting
V	Left top mounting
W	Left bottom mounting

(E) Mounted motor specification

M, Y, P, F	Select the mounted motor specification from the table below.

(F) Motor capacity

8	750 W

(G) Driving belt

X	Standard (rubber)
L	Low dust generation (urethane)

(H) Origin sensor (1 pc) *1 *2 *3

N	None
C	Outside motor side
D	Outside motor opposite side

(I) Limit sensor (2 pcs) *1 *2 *3

N	None
B	Outside

(J) Grease nipple *3 *4 *5

N	None (Body mounting direction: Bottom side)
R	Right
L	Left

(K) Positioning pin hole

N	None
P	Yes

Manufacturer	750 W
Mitsubishi Electric Corporation	M
Delta Electronics Co., Ltd.	M
Sanyo Denki Co., Ltd.	-
YASKAWA Electric Corporation	Y
Keyence Corporation	Y
Panasonic Corporation	P
OMRON Corporation	P
Fuji Electric Co., Ltd.	M
FANUC CORPORATION	F
Bosch Rexroth AG	P
Rockwell Automation, Inc.	M
SIEMENS AG	M

*Refer to page 403 for the motor model No.

*1: Origin sensor and limit sensor are available as a set. As it is both-or-nothing, select "None" for both.
*2: The user can adjust the sensor position. (Included at shipment)
*3: Contact CKD to use the origin sensor, limit sensor and grease nipple in the same direction.
*4: "Body mounting direction: Standard" here refers to mounting from the bottom side.
*5: When selecting motor mounting direction R, S, or T, grease nipple R cannot be selected. When selecting L, V, or W, grease nipple L cannot be selected.

Specifications

Applicable motor capacity		750 W servo motor
Drive method		Belt width 50 mm
Stroke length	mm	100 to 3400
Lead equivalent	mm	40
Max. load capacity *1	Horizontal kg	85
	Vertical kg	-
Max. speed	mm/s	2000
Rated thrust *1	N	367
Repeatability	mm	±0.04
Lost motion		0.1 mm or less
Dynamic allowable load	N	14174.2
Static allowable moment	N·m	MP: 2052, MY: 2052, MR: 1810
Dynamic allowable moment	N·m	MP: 1098.5, MY: 1098.5, MR: 999.3
Operating ambient temperature, humidity		0 to 40°C (no freezing) 35 to 80% RH (no condensation)
Storage ambient temperature, humidity		-10 to 50°C (no freezing) 35 to 80% RH (no condensation)
Atmosphere		No corrosive gas, explosive gas, or dust

*1 Rated thrust and max. load capacity are guideline values assuming that the motor mounted will output the rated torque.

Stroke and max. speed

(mm/s)

Lead equivalent \ Stroke length	100 to 3400
40	2000

*The max. speed is the speed when the motor mounted by the customer can output a rotation speed of 3000 rpm.

Allowable overhang length

*Refer to page 446 for details.

Moment direction

MP MY MR

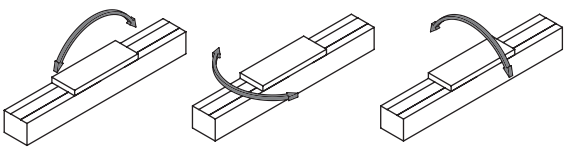

Dimensions Motor right-side mounting

● ECV-22-*****-R

· Refer to page 450 for grease nipple dimensions.

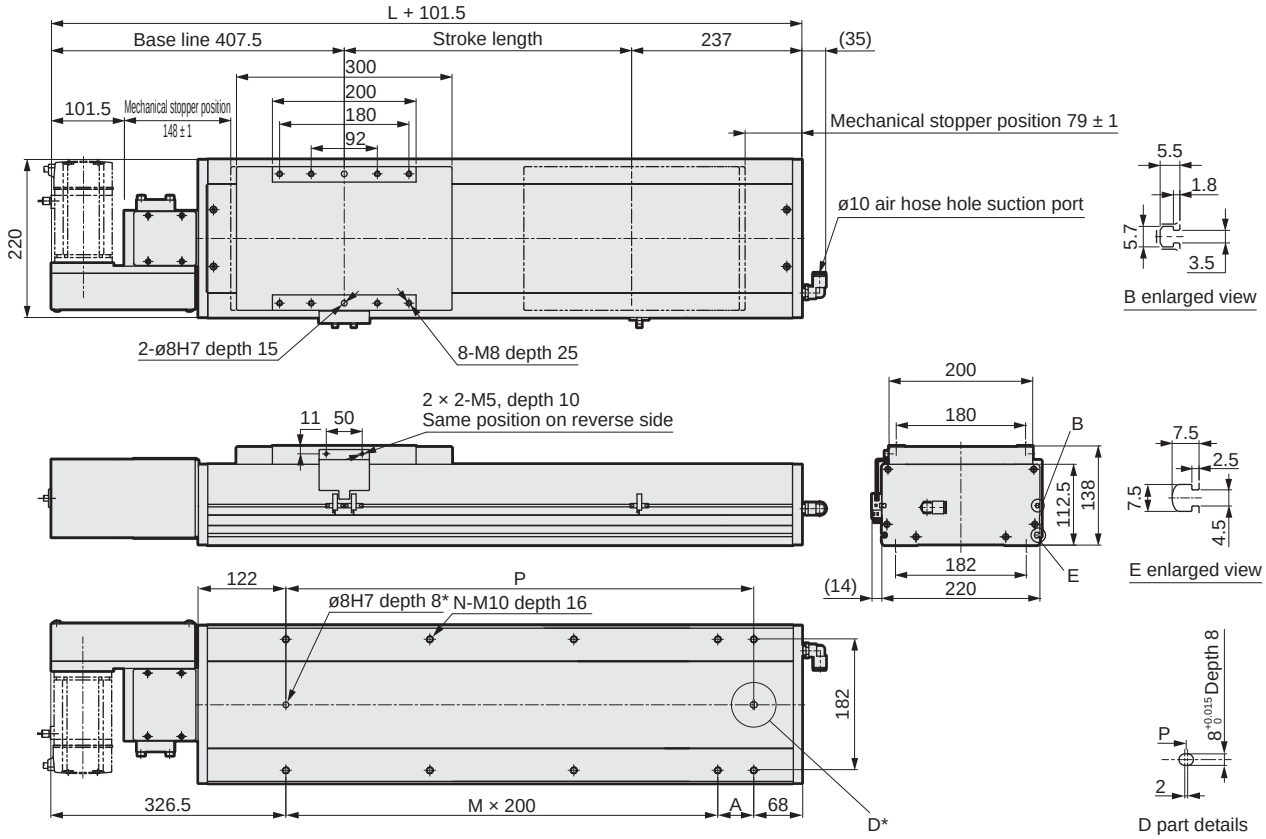

*Positioning pin hole (option)

Stroke length (mm)	100	150	200	250	300	350	400	450	500	550	600	650	700	750	800	850	900	950	1000	1050	1100	1150	1200
L	643	693	743	793	843	893	943	993	1043	1093	1143	1193	1243	1293	1343	1393	1443	1493	1543	1593	1643	1693	1743
A	150	200	50	100	150	200	50	100	150	200	50	100	150	200	50	100	150	200	50	100	150	200	50
M	1	1	2	2	2	2	3	3	3	3	4	4	4	4	5	5	5	5	6	6	6	6	7
N	6	6	8	8	8	8	10	10	10	10	12	12	12	12	14	14	14	14	16	16	16	16	18
P	350	400	450	500	550	600	650	700	750	800	850	900	950	1000	1050	1100	1150	1200	1250	1300	1350	1400	1450
Weight (kg)	33.0	34.2	35.4	36.6	37.8	39.0	40.2	41.4	42.6	43.8	45.0	46.2	47.4	48.6	49.8	51.0	52.2	53.4	54.6	55.8	57.0	58.2	59.4

Stroke length (mm)	1250	1300	1350	1400	1450	1500	1550	1600	1650	1700	1750	1800	1850	1900	1950	2000	2050	2100	2150	2200	2250	2300	2350
L	1793	1843	1893	1943	1993	2043	2093	2143	2193	2243	2293	2343	2393	2443	2493	2543	2593	2643	2693	2743	2793	2843	2893
A	100	150	200	50	100	150	200	50	100	150	200	50	100	150	200	50	100	150	200	50	100	150	200
M	7	7	7	8	8	8	8	9	9	9	9	10	10	10	10	11	11	11	11	12	12	12	12
N	18	18	18	20	20	20	20	22	22	22	22	24	24	24	24	26	26	26	26	28	28	28	28
P	1500	1550	1600	1650	1700	1750	1800	1850	1900	1950	2000	2050	2100	2150	2200	2250	2300	2350	2400	2450	2500	2550	2600
Weight (kg)	60.6	61.8	63.0	64.2	65.4	66.6	67.8	69.0	70.2	71.4	72.6	73.8	75.0	76.2	77.4	78.6	79.8	81.0	82.2	83.4	84.6	85.8	87.0

Stroke length (mm)	2400	2450	2500	2550	2600	2650	2700	2750	2800	2850	2900	2950	3000	3050	3100	3150	3200	3250	3300	3350	3400
L	2943	2993	3043	3093	3143	3193	3243	3293	3343	3393	3443	3493	3543	3593	3643	3693	3743	3793	3843	3893	3943
A	50	100	150	200	50	100	150	200	50	100	150	200	50	100	150	200	50	100	150	200	50
M	13	13	13	13	14	14	14	14	15	15	15	15	16	16	16	16	17	17	17	17	18
N	30	30	30	30	32	32	32	32	34	34	34	34	36	36	36	36	36	38	38	38	40
P	2650	2700	2750	2800	2850	2900	2950	3000	3050	3100	3150	3200	3250	3300	3350	3400	3450	3500	3550	3600	3650
Weight (kg)	88.2	89.4	90.6	91.8	93.0	94.2	95.4	96.6	97.8	99.0	100.2	101.4	102.6	103.8	105.0	106.2	107.4	108.6	109.8	111.0	112.2

*Refer to page 443 for motor mounting part dimensions and list of attachments.

Dimensions Motor right top mounting

● ECV-22-*****-S

· Refer to page 450 for grease nipple dimensions.

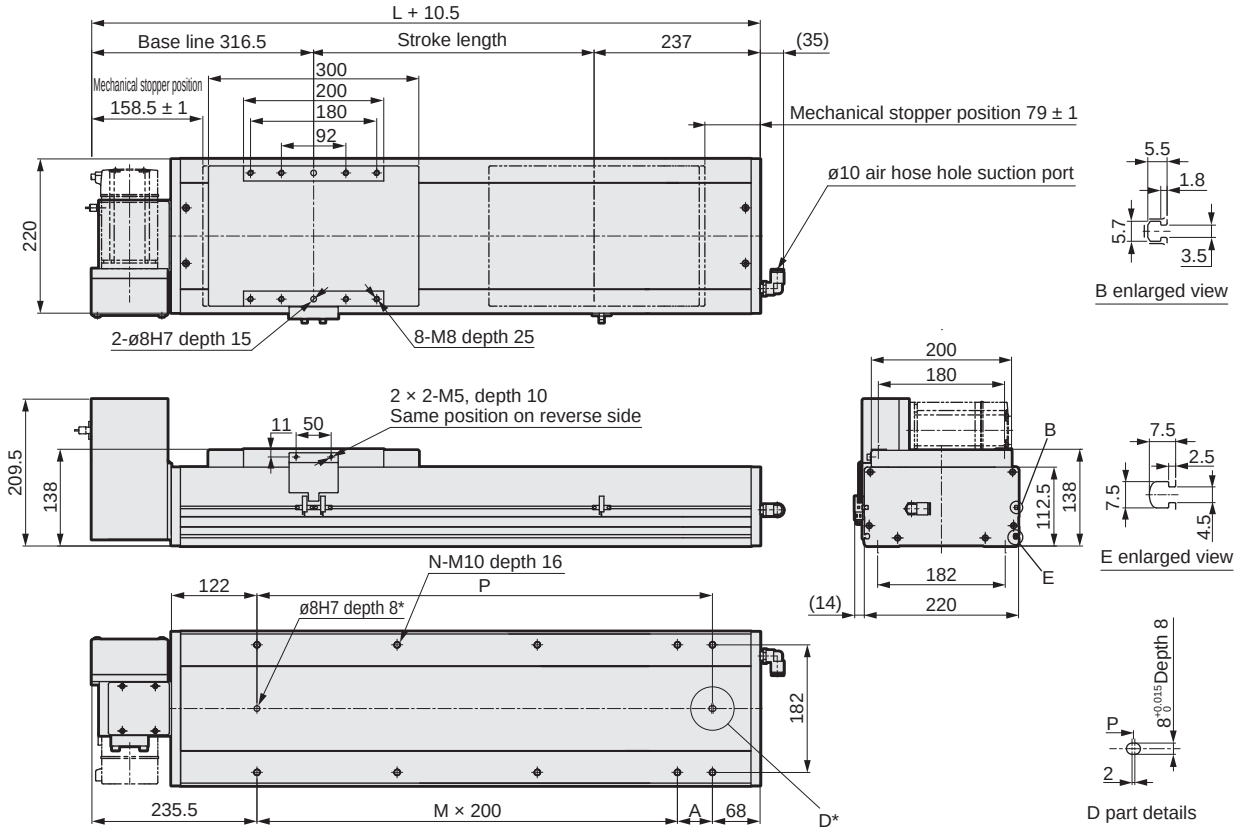

*Positioning pin hole (option)

Stroke length (mm)	100	150	200	250	300	350	400	450	500	550	600	650	700	750	800	850	900	950	1000	1050	1100	1150	1200
L	643	693	743	793	843	893	943	993	1043	1093	1143	1193	1243	1293	1343	1393	1443	1493	1543	1593	1643	1693	1743
A	150	200	50	100	150	200	50	100	150	200	50	100	150	200	50	100	150	200	50	100	150	200	50
M	1	1	2	2	2	2	3	3	3	3	4	4	4	4	5	5	5	5	6	6	6	6	7
N	6	6	8	8	8	8	10	10	10	10	12	12	12	12	14	14	14	14	16	16	16	16	18
P	350	400	450	500	550	600	650	700	750	800	850	900	950	1000	1050	1100	1150	1200	1250	1300	1350	1400	1450
Weight (kg)	33.0	34.2	35.4	36.6	37.8	39.0	40.2	41.4	42.6	43.8	45.0	46.2	47.4	48.6	49.8	51.0	52.2	53.4	54.6	55.8	57.0	58.2	59.4

Stroke length (mm)	1250	1300	1350	1400	1450	1500	1550	1600	1650	1700	1750	1800	1850	1900	1950	2000	2050	2100	2150	2200	2250	2300	2350
L	1793	1843	1893	1943	1993	2043	2093	2143	2193	2243	2293	2343	2393	2443	2493	2543	2593	2643	2693	2743	2793	2843	2893
A	100	150	200	50	100	150	200	50	100	150	200	50	100	150	200	50	100	150	200	50	100	150	200
M	7	7	7	8	8	8	8	9	9	9	9	10	10	10	10	11	11	11	11	12	12	12	12
N	18	18	18	20	20	20	20	22	22	22	22	24	24	24	24	26	26	26	26	28	28	28	28
P	1500	1550	1600	1650	1700	1750	1800	1850	1900	1950	2000	2050	2100	2150	2200	2250	2300	2350	2400	2450	2500	2550	2600
Weight (kg)	60.6	61.8	63.0	64.2	65.4	66.6	67.8	69.0	70.2	71.4	72.6	73.8	75.0	76.2	77.4	78.6	79.8	81.0	82.2	83.4	84.6	85.8	87.0

Stroke length (mm)	2400	2450	2500	2550	2600	2650	2700	2750	2800	2850	2900	2950	3000	3050	3100	3150	3200	3250	3300	3350	3400
L	2943	2993	3043	3093	3143	3193	3243	3293	3343	3393	3443	3493	3543	3543	3643	3693	3743	3793	3843	3893	3943
A	50	100	150	200	50	100	150	200	50	100	150	200	50	100	150	200	50	100	150	200	50
M	13	13	13	13	14	14	14	14	15	15	15	15	16	16	16	16	17	17	17	17	18
N	30	30	30	30	32	32	32	32	34	34	34	34	36	36	36	36	38	38	38	38	40
P	2650	2700	2750	2800	2850	2900	2950	3000	3050	3100	3150	3200	3250	3300	3350	3400	3450	3500	3550	3600	3650
Weight (kg)	88.2	89.4	90.6	91.8	93.0	94.2	95.4	96.6	97.8	99.0	100.2	101.4	102.6	103.8	105.0	106.2	107.4	108.6	109.8	111.0	112.2

*Refer to page 443 for motor mounting part dimensions and list of attachments.

Dimensions Motor right bottom mounting

● ECV-22-*****-T

· Refer to page 450 for grease nipple dimensions.

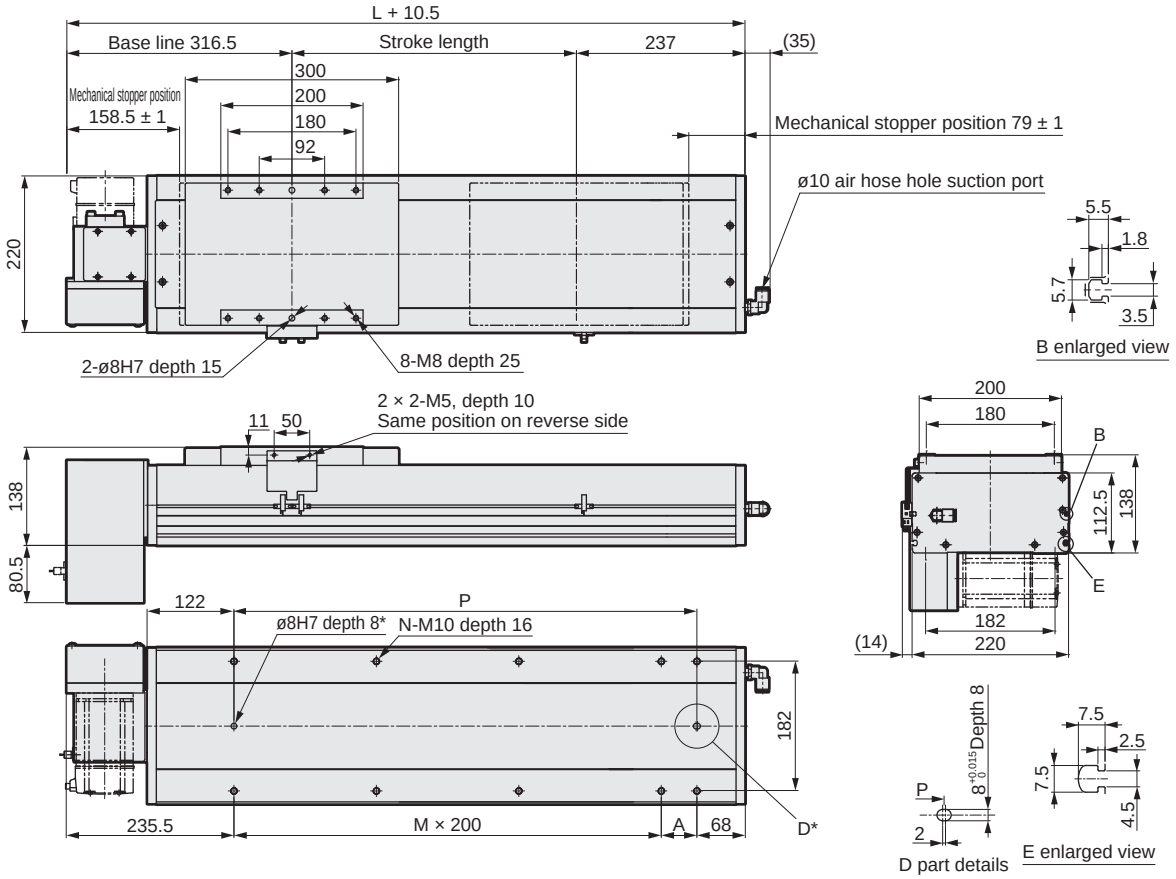

*Positioning pin hole (option)

Stroke length (mm)	100	150	200	250	300	350	400	450	500	550	600	650	700	750	800	850	900	950	1000	1050	1100	1150	1200
L	643	693	743	793	843	893	943	993	1043	1093	1143	1193	1243	1293	1343	1393	1443	1493	1543	1593	1643	1693	1743
A	150	200	50	100	150	200	50	100	150	200	50	100	150	200	50	100	150	200	50	100	150	200	50
M	1	1	2	2	2	2	3	3	3	3	4	4	4	4	5	5	5	5	6	6	6	6	7
N	6	6	8	8	8	8	10	10	10	10	12	12	12	12	14	14	14	14	16	16	16	16	18
P	350	400	450	500	550	600	650	700	750	800	850	900	950	1000	1050	1100	1150	1200	1250	1300	1350	1400	1450
Weight (kg)	33.0	34.2	35.4	36.6	37.8	39.0	40.2	41.4	42.6	43.8	45.0	46.2	47.4	48.6	49.8	51.0	52.2	53.4	54.6	55.8	57.0	58.2	59.4

Stroke length (mm)	1250	1300	1350	1400	1450	1500	1550	1600	1650	1700	1750	1800	1850	1900	1950	2000	2050	2100	2150	2200	2250	2300	2350
L	1793	1843	1893	1943	1993	2043	2093	2143	2193	2243	2293	2343	2393	2443	2493	2543	2593	2643	2693	2743	2793	2843	2893
A	100	150	200	50	100	150	200	50	100	150	200	50	100	150	200	50	100	150	200	50	100	150	200
M	7	7	7	8	8	8	8	9	9	9	9	10	10	10	10	11	11	11	11	12	12	12	12
N	18	18	18	20	20	20	20	22	22	22	22	24	24	24	24	26	26	26	26	28	28	28	28
P	1500	1550	1600	1650	1700	1750	1800	1850	1900	1950	2000	2050	2100	2150	2200	2250	2300	2350	2400	2450	2500	2550	2600
Weight (kg)	60.6	61.8	63.0	64.2	65.4	66.6	67.8	69.0	70.2	71.4	72.6	73.8	75.0	76.2	77.4	78.6	79.8	81.0	82.2	83.4	84.6	85.8	87.0

Stroke length (mm)	2400	2450	2500	2550	2600	2650	2700	2750	2800	2850	2900	2950	3000	3050	3100	3150	3200	3250	3300	3350	3400
L	2943	2993	3043	3093	3143	3193	3243	3293	3343	3393	3443	3493	3543	3593	3643	3693	3743	3793	3843	3893	3943
A	50	100	150	200	50	100	150	200	50	100	150	200	50	100	150	200	50	100	150	200	50
M	13	13	13	13	14	14	14	14	15	15	15	15	16	16	16	16	17	17	17	17	18
N	30	30	30	30	32	32	32	32	34	34	34	34	36	36	36	36	38	38	38	38	40
P	2650	2700	2750	2800	2850	2900	2950	3000	3050	3100	3150	3200	3250	3300	3350	3400	3450	3500	3550	3600	3650
Weight (kg)	88.2	89.4	90.6	91.8	93.0	94.2	95.4	96.6	97.8	99.0	100.2	101.4	102.6	103.8	105.0	106.2	107.4	108.6	109.8	111.0	112.2

*Refer to page 443 for motor mounting part dimensions and list of attachments.

Dimensions Motor left-side mounting

● ECV-22-*****-L

· Refer to page 450 for grease nipple dimensions.

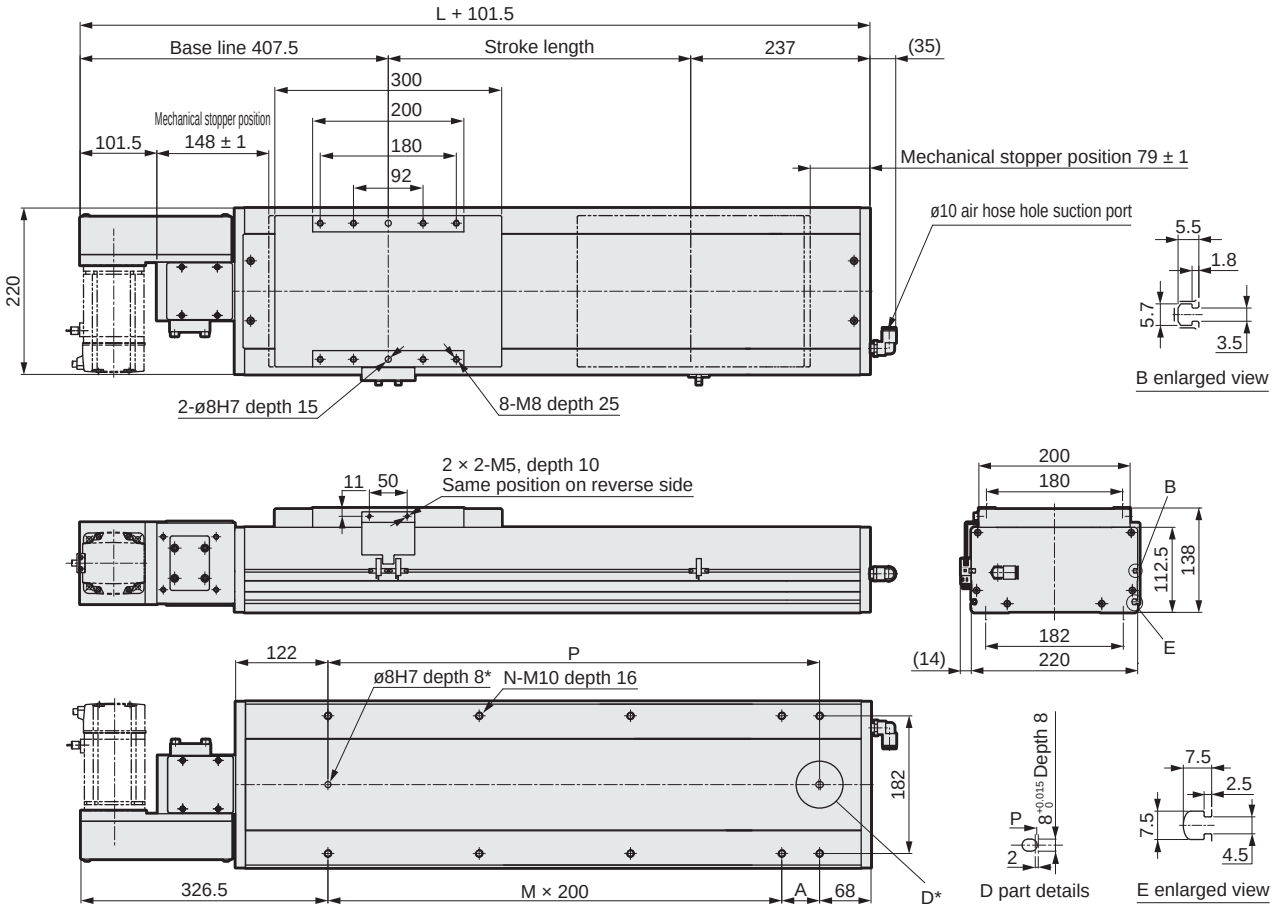

*Positioning pin hole (option)

Stroke length (mm)	100	150	200	250	300	350	400	450	500	550	600	650	700	750	800	850	900	950	1000	1050	1100	1150	1200
L	643	693	743	793	843	893	943	993	1043	1093	1143	1193	1243	1293	1343	1393	1443	1493	1543	1593	1643	1693	1743
A	150	200	50	100	150	200	50	100	150	200	50	100	150	200	50	100	150	200	50	100	150	200	50
M	1	1	2	2	2	2	3	3	3	3	4	4	4	4	5	5	5	5	6	6	6	6	7
N	6	6	8	8	8	8	10	10	10	10	12	12	12	12	14	14	14	14	16	16	16	16	18
P	350	400	450	500	550	600	650	700	750	800	850	900	950	1000	1050	1100	1150	1200	1250	1300	1350	1400	1450
Weight (kg)	33.0	34.2	35.4	36.6	37.8	39.0	40.2	41.4	42.6	43.8	45.0	46.2	47.4	48.6	49.8	51.0	52.2	53.4	54.6	55.8	57.0	58.2	59.4

Stroke length (mm)	1250	1300	1350	1400	1450	1500	1550	1600	1650	1700	1750	1800	1850	1900	1950	2000	2050	2100	2150	2200	2250	2300	2350
L	1793	1843	1893	1943	1993	2043	2093	2143	2193	2243	2293	2343	2393	2443	2493	2543	2593	2643	2693	2743	2793	2843	2893
A	100	150	200	50	100	150	200	50	100	150	200	50	100	150	200	50	100	150	200	50	100	150	200
M	7	7	7	8	8	8	8	9	9	9	9	10	10	10	10	11	11	11	11	12	12	12	12
N	18	18	18	20	20	20	20	22	22	22	22	24	24	24	24	26	26	26	26	28	28	28	28
P	1500	1550	1600	1650	1700	1750	1800	1850	1900	1950	2000	2050	2100	2150	2200	2250	2300	2350	2400	2450	2500	2550	2600
Weight (kg)	60.6	61.8	63.0	64.2	65.4	66.6	67.8	69.0	70.2	71.4	72.6	73.8	75.0	76.2	77.4	78.6	79.8	81.0	82.2	83.4	84.6	85.8	87.0

Stroke length (mm)	2400	2450	2500	2550	2600	2650	2700	2750	2800	2850	2900	2950	3000	3050	3100	3150	3200	3250	3300	3350	3400
L	2943	2993	3043	3093	3143	3193	3243	3293	3343	3393	3443	3493	3543	3593	3643	3693	3743	3793	3843	3893	3943
A	50	100	150	200	50	100	150	200	50	100	150	200	50	100	150	200	50	100	150	200	50
M	13	13	13	13	14	14	14	14	15	15	15	15	16	16	16	16	17	17	17	17	18
N	30	30	30	30	32	32	32	32	34	34	34	34	36	36	36	36	38	38	38	38	40
P	2650	2700	2750	2800	2850	2900	2950	3000	3050	3100	3150	3200	3250	3300	3350	3400	3450	3500	3550	3600	3650
Weight (kg)	88.2	89.4	90.6	91.8	93.0	94.2	95.4	96.6	97.8	99.0	100.2	101.4	102.6	103.8	105.0	106.2	107.4	108.6	109.8	111.0	112.2

*Refer to page 443 for motor mounting part dimensions and list of attachments.

Dimensions Motor left top mounting

● ECV-22-*****-V

· Refer to page 450 for grease nipple dimensions.

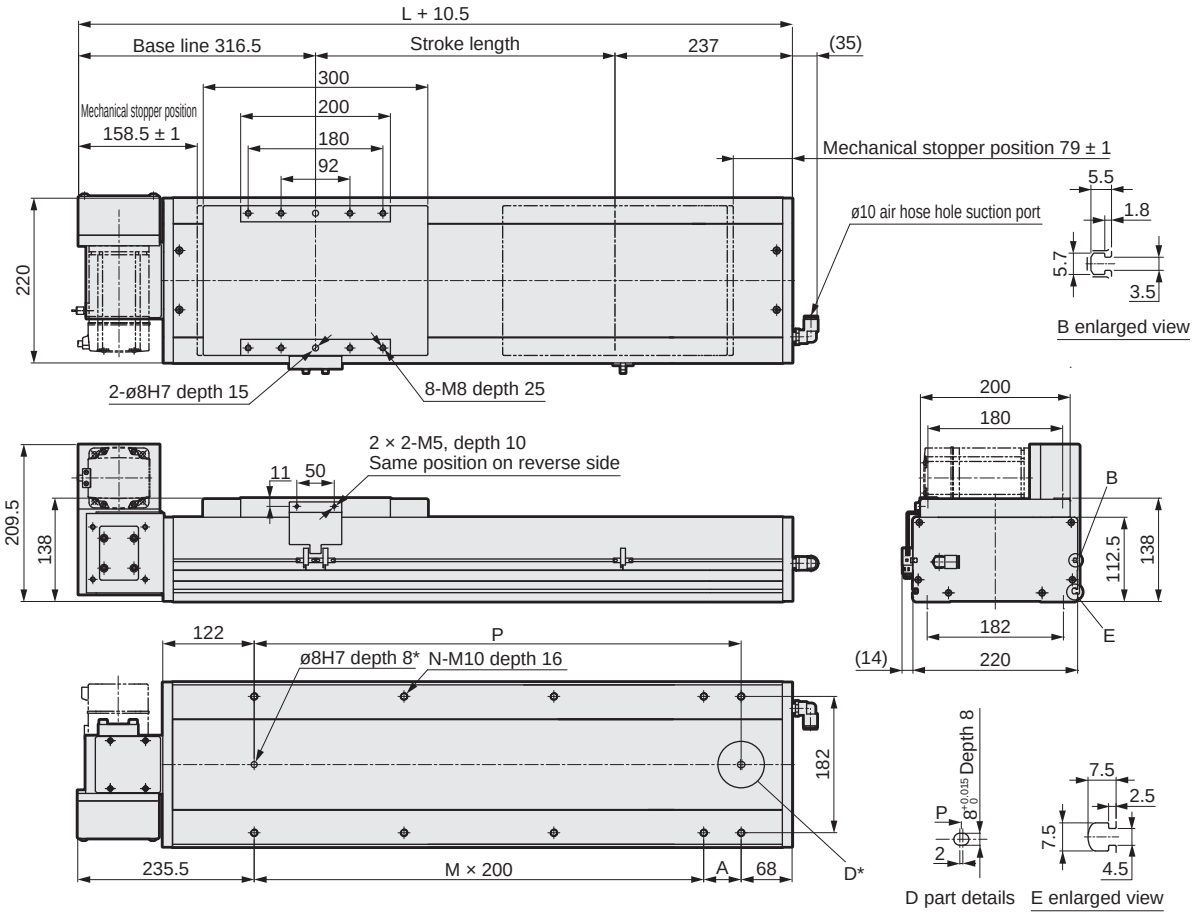

*Positioning pin hole (option)

Stroke length (mm)	100	150	200	250	300	350	400	450	500	550	600	650	700	750	800	850	900	950	1000	1050	1100	1150	1200
L	643	693	743	793	843	893	943	993	1043	1093	1143	1193	1243	1293	1343	1393	1443	1493	1543	1593	1643	1693	1743
A	150	200	50	100	150	200	50	100	150	200	50	100	150	200	50	100	150	200	50	100	150	200	50
M	1	1	2	2	2	2	3	3	3	3	4	4	4	4	5	5	5	5	6	6	6	6	7
N	6	6	8	8	8	8	10	10	10	10	12	12	12	12	14	14	14	14	16	16	16	16	18
P	350	400	450	500	550	600	650	700	750	800	850	900	950	1000	1050	1100	1150	1200	1250	1300	1350	1400	1450
Weight (kg)	33.0	34.2	35.4	36.6	37.8	39.0	40.2	41.4	42.6	43.8	45.0	46.2	47.4	48.6	49.8	51.0	52.2	53.4	54.6	55.8	57.0	58.2	59.4

Stroke length (mm)	1250	1300	1350	1400	1450	1500	1550	1600	1650	1700	1750	1800	1850	1900	1950	2000	2050	2100	2150	2200	2250	2300	2350
L	1793	1843	1893	1943	1993	2043	2093	2143	2193	2243	2293	2343	2393	2443	2493	2543	2593	2643	2693	2743	2793	2843	2893
A	100	150	200	50	100	150	200	50	100	150	200	50	100	150	200	50	100	150	200	50	100	150	200
M	7	7	7	8	8	8	8	9	9	9	9	10	10	10	10	11	11	11	11	12	12	12	12
N	18	18	18	20	20	20	20	22	22	22	22	24	24	24	24	26	26	26	26	28	28	28	28
P	1500	1550	1600	1650	1700	1750	1800	1850	1900	1950	2000	2050	2100	2150	2200	2250	2300	2350	2400	2450	2500	2550	2600
Weight (kg)	60.6	61.8	63.0	64.2	65.4	66.6	67.8	69.0	70.2	71.4	72.6	73.8	75.0	76.2	77.4	78.6	79.8	81.0	82.2	83.4	84.6	85.8	87.0

Stroke length (mm)	2400	2450	2500	2550	2600	2650	2700	2750	2800	2850	2900	2950	3000	3050	3100	3150	3200	3250	3300	3350	3400
L	2943	2993	3043	3093	3143	3193	3243	3293	3343	3393	3443	3493	3543	3593	3643	3693	3743	3793	3843	3893	3943
A	50	100	150	200	50	100	150	200	50	100	150	200	50	100	150	200	50	100	150	200	50
M	13	13	13	13	14	14	14	14	15	15	15	15	16	16	16	16	17	17	17	17	18
N	30	30	30	30	32	32	32	32	34	34	34	34	36	36	36	36	38	38	38	38	40
P	2650	2700	2750	2800	2850	2900	2950	3000	3050	3100	3150	3200	3250	3300	3350	3400	3450	3500	3550	3600	3650
Weight (kg)	88.2	89.4	90.6	91.8	93.0	94.2	95.4	96.6	97.8	99.0	100.2	101.4	102.6	103.8	105.0	106.2	107.4	108.6	109.8	111.0	112.2

*Refer to page 443 for motor mounting part dimensions and list of attachments.

Dimensions Motor left bottom mounting

● ECV-22-*****-W

· Refer to page 450 for grease nipple dimensions.

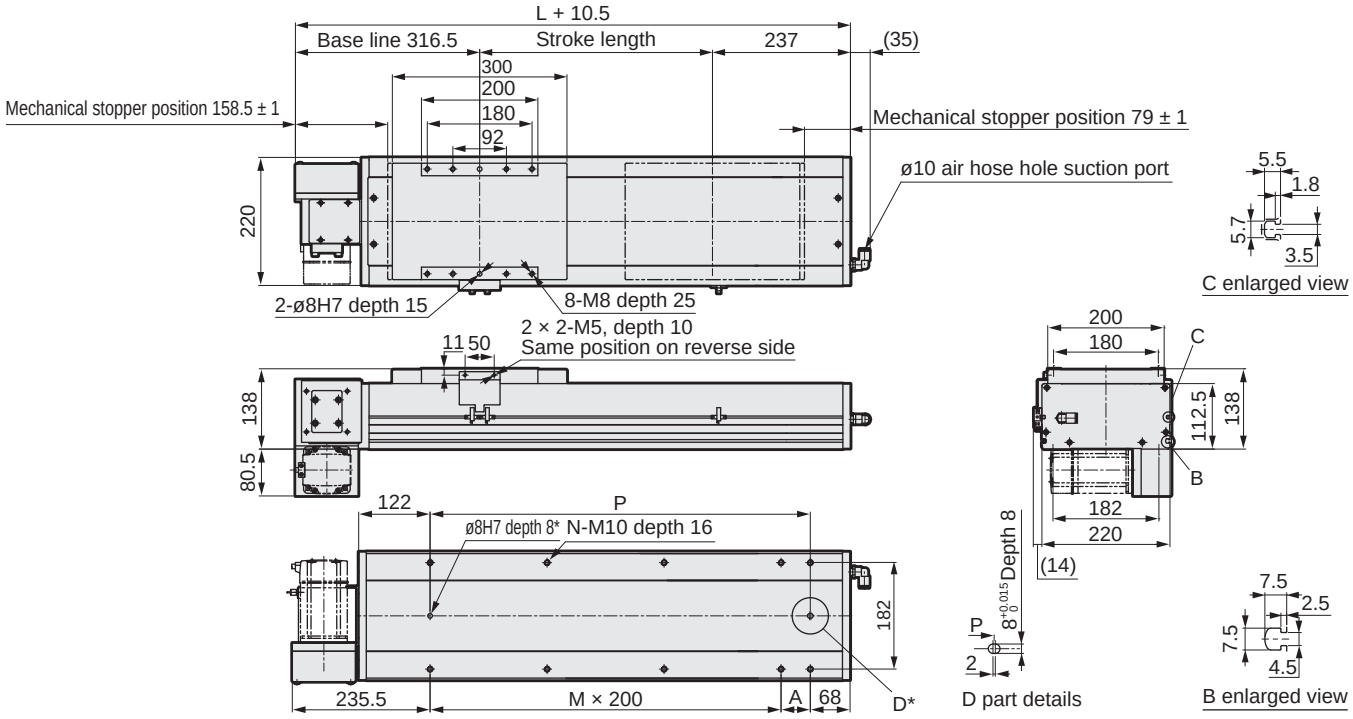

*Positioning pin hole (option)

Stroke length (mm)	100	150	200	250	300	350	400	450	500	550	600	650	700	750	800	850	900	950	1000	1050	1100	1150	1200
L	643	693	743	793	843	893	943	993	1043	1093	1143	1193	1243	1293	1343	1393	1443	1493	1543	1593	1643	1693	1743
A	150	200	50	100	150	200	50	100	150	200	50	100	150	200	50	100	150	200	50	100	150	200	50
M	1	1	2	2	2	2	3	3	3	3	4	4	4	4	5	5	5	5	6	6	6	6	7
N	6	6	8	8	8	8	10	10	10	10	12	12	12	12	14	14	14	14	16	16	16	16	18
P	350	400	450	500	550	600	650	700	750	800	850	900	950	1000	1050	1100	1150	1200	1250	1300	1350	1400	1450
Weight (kg)	33.0	34.2	35.4	36.6	37.8	39.0	40.2	41.4	42.6	43.8	45.0	46.2	47.4	48.6	49.8	51.0	52.2	53.4	54.6	55.8	57.0	58.2	59.4

Stroke length (mm)	1250	1300	1350	1400	1450	1500	1550	1600	1650	1700	1750	1800	1850	1900	1950	2000	2050	2100	2150	2200	2250	2300	2350
L	1793	1843	1893	1943	1993	2043	2093	2143	2193	2243	2293	2343	2393	2443	2493	2543	2593	2643	2693	2743	2793	2843	2893
A	100	150	200	50	100	150	200	50	100	150	200	50	100	150	200	50	100	150	200	50	100	150	200
M	7	7	7	8	8	8	8	9	9	9	9	10	10	10	10	11	11	11	11	12	12	12	12
N	18	18	18	20	20	20	20	22	22	22	22	24	24	24	24	26	26	26	26	28	28	28	28
P	1500	1550	1600	1650	1700	1750	1800	1850	1900	1950	2000	2050	2100	2150	2200	2250	2300	2350	2400	2450	2500	2550	2600
Weight (kg)	60.6	61.8	63.0	64.2	65.4	66.6	67.8	69.0	70.2	71.4	72.6	73.8	75.0	76.2	77.4	78.6	79.8	81.0	82.2	83.4	84.6	85.8	87.0

Stroke length (mm)	2400	2450	2500	2550	2600	2650	2700	2750	2800	2850	2900	2950	3000	3050	3100	3150	3200	3250	3300	3350	3400
L	2943	2993	3043	3093	3143	3193	3243	3293	3343	3393	3443	3493	3543	3593	3643	3693	3743	3793	3843	3893	3943
A	50	100	150	200	50	100	150	200	50	100	150	200	50	100	150	200	50	100	150	200	50
M	13	13	13	13	14	14	14	14	15	15	15	15	16	16	16	16	17	17	17	17	18
N	30	30	30	30	32	32	32	32	34	34	34	34	36	36	36	36	38	38	38	38	40
P	2650	2700	2750	2800	2850	2900	2950	3000	3050	3100	3150	3200	3250	3300	3350	3400	3450	3500	3550	3600	3650
Weight (kg)	88.2	89.4	90.6	91.8	93.0	94.2	95.4	96.6	97.8	99.0	100.2	101.4	102.6	103.8	105.0	106.2	107.4	108.6	109.8	111.0	112.2

*Refer to page 443 for motor mounting part dimensions and list of attachments.

Motor mounting part

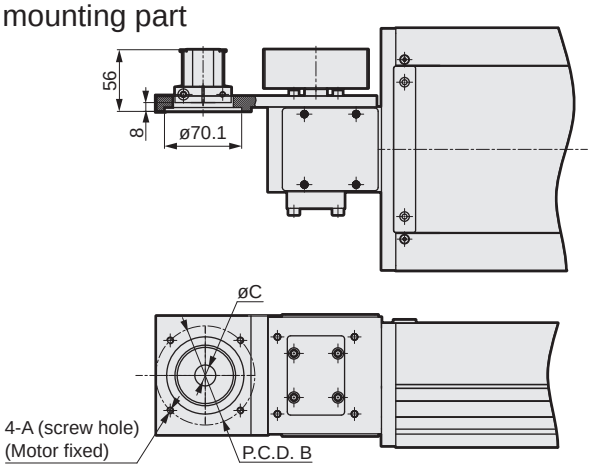

Mounted motor specification		A	B	C	Motor mounting bolt
M	750 W	M6	ø90	ø19	4-M6 × L20
Y	750 W	M6	ø90	ø19	4-M6 × L20
P	750 W	M5	ø90	ø19	4-M5 × L20
F	750 W	M6	ø100	ø14	4-M6 × L20

List of attachments

[Motor mounting parts]

Mounted motor specification	Timing belt, pulley	Fitting	Motor capacity	Motor mounting bolt	
				Size	Quantity
M	Included at shipment	Included at shipment	750 W	M6	4
Y				M6	4
P				M5	4
F				M6	4

*Refer to page 452 for fitting details.

[Origin sensor/Limit sensor]

Manufacturer	Model	Quantity
OMRON Corporation	EE-SX672	3

*Refer to page 448 for sensor specifications.

MEMO

Model selection

STEP 1 Confirming load capacity

Load capacity varies with mounting orientation and screw lead.
Refer to the selection table (page 400) and the specification table for each model to select the size and lead.

STEP 2 Confirming positioning time

Calculate the positioning time of the selected product according to the following example and confirm that the required tact is achievable.
Select the speed and acceleration/deceleration from the specification table for each model and the motor selected by the customer.

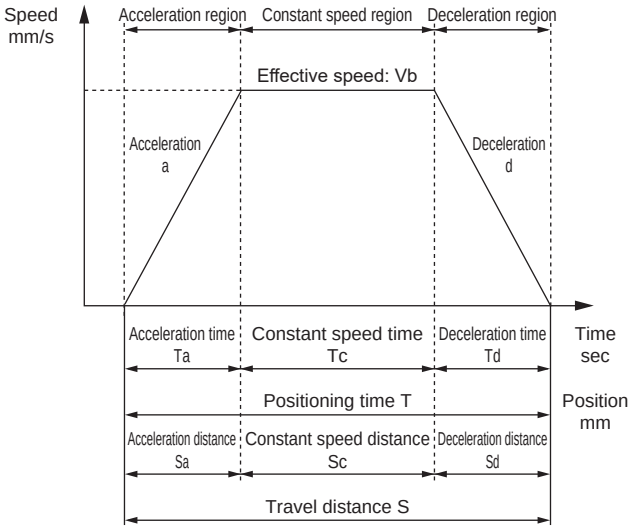

	Description	Code	Unit	Remarks
Set value	Set speed	V	mm/s	
	Set acceleration	a	mm/s^2	
	Set deceleration	d	mm/s^2	
	Travel distance	S	mm	
Calculated value	Achieved speed	Vmax	mm/s	$= \{2 \times a \times d \times S/(a + d)\}^{1/2}$
	Effective speed	Vb	mm/s	Smaller of V and Vmax
	Acceleration time	Ta	s	= Vb/a [0.4 sec or more]
	Deceleration time	Td	s	= Vb/d [0.4 sec or more]
	Constant speed time	Tc	s	= Sc/Vb
	Acceleration distance	Sa	mm	$= (a \times Ta^2)/2$
	Deceleration distance	Sd	mm	$= (d \times Td^2)/2$
	Constant speed distance	Sc	mm	= S - (Sa + Sd)
	Positioning time	T	s	= Ta + Tc + Td

*Do not use at speeds that exceed the specifications.
*Acceleration/deceleration setting by acceleration/deceleration time varies with set speed and stroke length.
*Depending on acceleration/deceleration and stroke length, the trapezoid speed waveform may not be formed (the set speed may not be achieved). In this case, select the effective speed (Vb) from the set speed (V) and the achieved speed (Vmax), whichever is smaller.
*Use with acceleration time/deceleration time of 0.4 sec or longer.
*1 G ≈ 9.8 m/s^2.

STEP 3 Checking allowable overhang length

Make sure that the load overhang length during operation is within the allowable range (pages 446 to 447).

For selection details, confirm with the CKD online model selection system, or contact CKD.

Introducing the online model selection system

[For confirmation via PC]

(https://www.ckd.co.jp/kiki/en/selection_system/)

[For confirmation via iPad or smartphone]

*Depending on your smartphone environment, it may not be displayed correctly.

MEMO

Allowable overhang length (ECV Series)

[When installed horizontally]

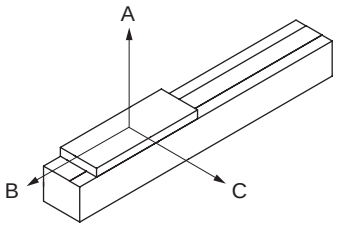

[Allowable overhang length]

● ECV-05

Motor mounted	Acceleration/deceleration time sec	Screw lead equivalent	Weight kg	Overhang mm		
				A	B	C
Left/Right/ Bottom	0.4	40	3	55	20	30

● ECV-14

Motor mounted	Acceleration/deceleration time sec	Screw lead equivalent	Weight kg	Overhang mm		
				A	B	C
Left/Right/ Bottom	0.4	40	10	1800	700	550
			20	880	330	260
			25	700	260	200

● ECV-06

Motor mounted	Acceleration/deceleration time sec	Screw lead equivalent	Weight kg	Overhang mm		
				A	B	C
Left/Right/ Bottom	0.4	40	3	210	60	110

● ECV-17

Motor mounted	Acceleration/deceleration time sec	Screw lead equivalent	Weight kg	Overhang mm		
				A	B	C
Left/Right/ Bottom	40	10	10	3000	1250	1150
			20	1600	600	550
			30	1050	400	360
			45	650	250	230

● ECV-10

Motor mounted	Acceleration/deceleration time sec	Screw lead equivalent	Weight kg	Overhang mm		
				A	B	C
Left/Right/ Bottom	0.4	32	5	550	160	140
			8	330	100	85
			10	260	80	65

● ECV-22

Motor mounted	Acceleration/deceleration time sec	Screw lead equivalent	Weight kg	Overhang mm		
				A	B	C
Left/Right/ Bottom	0.4	40	45	1700	650	470
			65	1150	420	310
			85	850	310	225

Allowable overhang length (ECV Series)

[When wall-mounted]

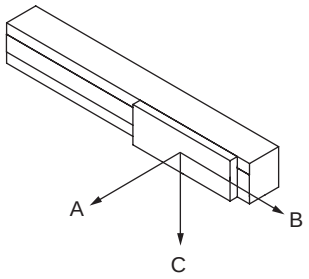

[Allowable overhang length]

● ECV-05

Motor mounted	Acceleration/deceleration time sec	Screw lead equivalent	Weight kg	Overhang mm		
				A	B	C
Left/Right/ Bottom	0.4	40	3	29	21	57

● ECV-14

Motor mounted	Acceleration/deceleration time sec	Screw lead equivalent	Weight kg	Overhang mm		
				A	B	C
Left/Right/ Bottom	0.4	40	10	540	690	1800
			20	260	330	860
			25	200	255	680

● ECV-06

Motor mounted	Acceleration/deceleration time sec	Screw lead equivalent	Weight kg	Overhang mm		
				A	B	C
Left/Right/ Bottom	0.4	40	3	120	80	220

● ECV-17

Motor mounted	Acceleration/deceleration time sec	Screw lead equivalent	Weight kg	Overhang mm		
				A	B	C
Left/Right/ Bottom	0.4	40	10	1150	1250	2700
			20	550	600	1550
			30	350	390	1000
			45	220	230	630

● ECV-10

Motor mounted	Acceleration/deceleration time sec	Screw lead equivalent	Weight kg	Overhang mm		
				A	B	C
Left/Right/ Bottom	0.4	32	5	140	160	520
			8	85	100	320
			10	65	75	250

● ECV-22

Motor mounted	Acceleration/deceleration time sec	Screw lead equivalent	Weight kg	Overhang mm		
				A	B	C
Left/Right/ Bottom	0.4	40	45	480	650	1700
			65	320	430	1150
			85	230	320	850

Sensor specifications

Manufacturer	Model	Quantity
OMRON Corporation	EE-SX672	3

Performance

Item	Specifications
Hysteresis	0.025 mm or less
Light source (peak emission wavelength)	GaAs infrared LED (940 nm)
Indicator lamp	ON when receiving light (red)
Power supply voltage	5 to 24 VDC ±10% ripple (P-P) 10% or less
Current consumption	35 mA or less (NPN)
Control output	NPN: NPN open collector output 5 to 24 VDC 100 mA or less OFF state current 0.5 mA or less Residual voltage 0.8 V or less (at load current 100 mA) Residual voltage 0.4 V or less (at load current 40 mA)
Operating ambient illumination	Light-receiving surface luminance Fluorescent light: 1,000 lx or less
Ambient temperature	When operating: -25 to +55°C When stored: -30 to +80°C (no condensation or freezing)
Ambient humidity	When operating: 5 to 85% RH When stored: 5 to 95% RH (no condensation or freezing)
Degree of protection	IP50 IEC 60529 Standards
Cord length	2 m (Connector with cord [EE-1006 2M])

Output circuit

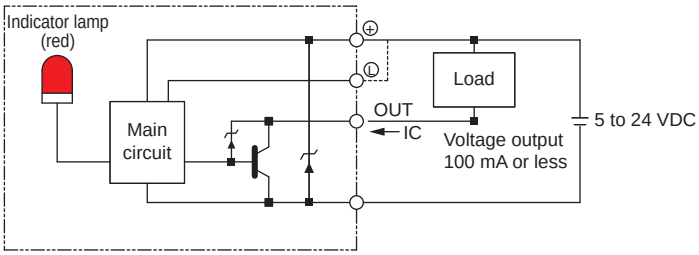

Wiring diagram

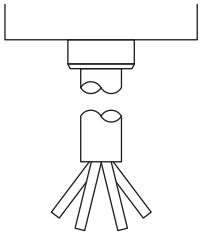

Terminal layout

Brown	5 to 24 VDC
Pink	L
Blue	0 V
Black	OUTPUT

Sensor dog dimensions

	Motor mounting direction
Body size	U/D
ECV-05	Fig. 1
ECV-06	Fig. 2

Fig. 1

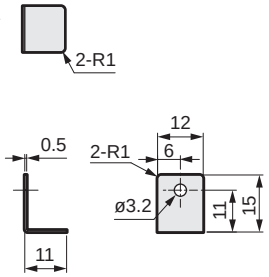

Fig. 2

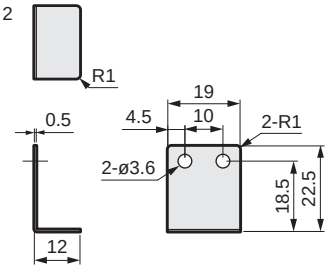

	Motor mounting direction
Body size	R/S/T/L/V/W
ECV-10	Fig. 3
ECV-14	Fig. 4
ECV-17	Fig. 4
ECV-22	Fig. 5

Fig. 3

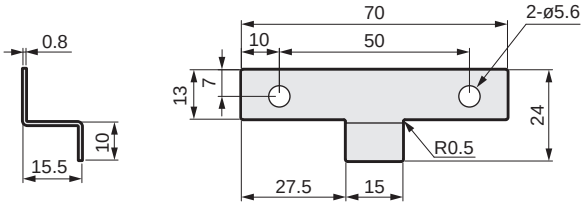

Fig. 4

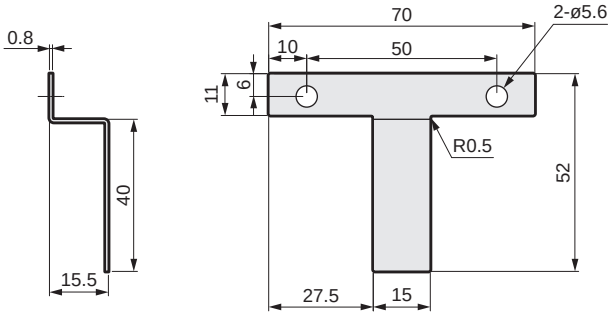

Fig. 5

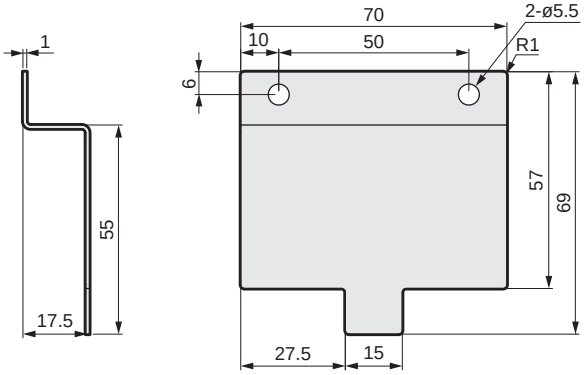

Grease nipple dimensions

*Horizontally symmetrical against the actuator.

● ECV-10

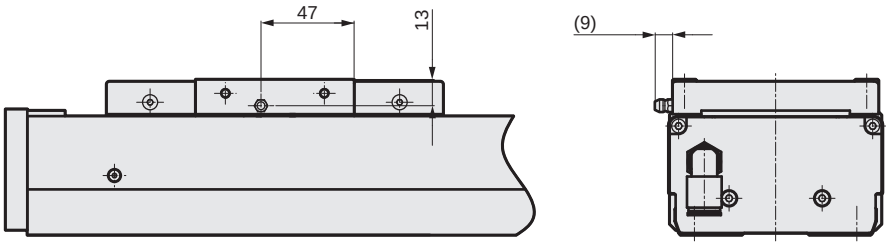

● ECV-14

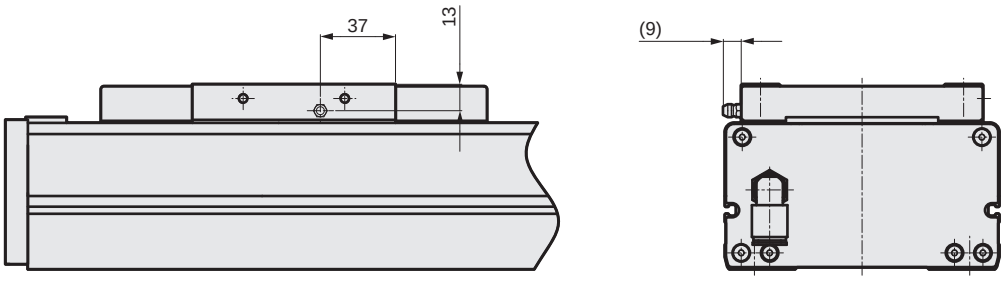

● ECV-17

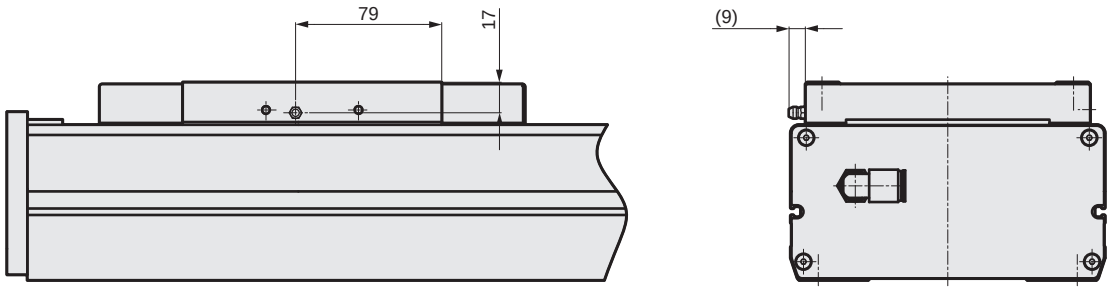

● ECV-22

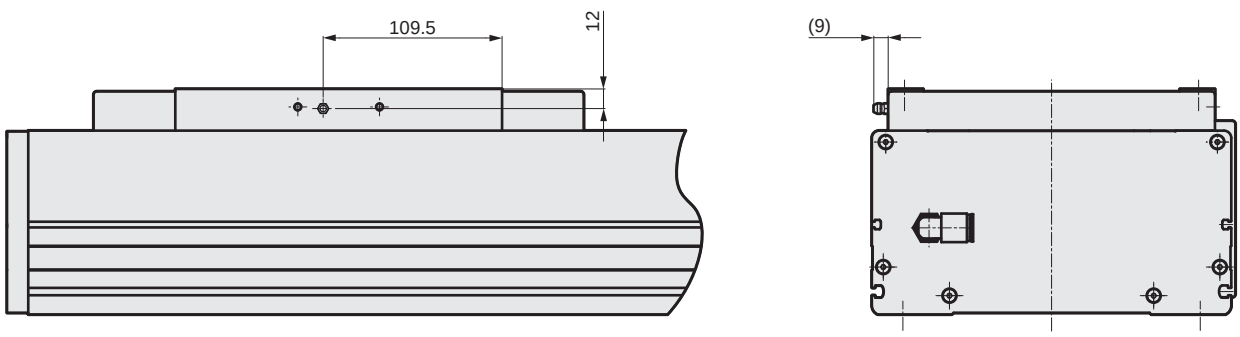

MEMO

List of attachments

Basic

Motor mounting bolt (common motor mounting direction)

Model No.	Mounted motor specification	Motor capacity	Size	Quantity
ECV-05 ECV-06 ECV-10	M	100 W	M4	2 pcs
	Y		M4	2 pcs
	P		M3	4 pcs
	F		M4	2 pcs
ECV-14	M	200 W	M5	4 pcs
	Y		M5	4 pcs
	P		M4	4 pcs
	F		M5	4 pcs
ECV-17	M	400 W	M5	4 pcs
	Y		M5	4 pcs
	P		M4	4 pcs
	F		M5	4 pcs
ECV-22	M	750 W	M6	4 pcs
	Y		M6	4 pcs
	P		M5	4 pcs
	F		M6	4 pcs

By motor mounting direction

Attachment name	Attachment quantity
Timing belt	1
Pulley	1

When origin/limit sensors are selected

Sensor mounting direction	Shipping format	Quantity
Outer sensor	Included at shipment *1	3 *2

*1: When “None” is selected for origin sensor or limit sensor, the other sensor is also “None”. The sensor rail (ECV-10) is “None” at shipment.
*2: Sensor mounting screws are also included.

Suction port fitting

Model No.	Fitting model No.	Shipping format	Quantity
ECV-05/ECV-06	GWL6-M5	Assembled at shipment	2
ECV-10 to ECV-22	GWL10-8	Included at shipment	1

Maintenance parts

● Maintenance parts set

Model No.	Compatibility	Components					
		(1)	(2)	(3)	(4)	(5)	(6)
		Timing belt 	Pulley 	Sensor dog 	Photoelectric bracket 	Bearing 	Roller unit 
ETV-08JP002-0014	ECV-05	-	○ (1 pc)	○ (1 pc)	-	○ (1 pc)	-
ETV-08JP002-0015	ECV-06	-	○ (1 pc)	○ (1 pc)	-	○ (1 pc)	-
ECV-08JP002-0021	ECV-10	○ (1 pc)	○ (1 pc)	○ (1 pc)	○ (4 pcs)	-	○ (4 pcs)
ECV-08JP002-0022	ECV-14	○ (1 pc)	○ (3 pcs)	○ (1 pc)	-	-	○ (4 pcs)
ECV-08JP002-0023	ECV-17	○ (1 pc)	○ (1 pc)	○ (1 pc)	-	-	○ (4 pcs)
ECV-08JP002-0020	ECV-22	○ (2 pcs)	○ (2 pcs)	○ (1 pc)	-	-	○ (6 pcs)

● Maintenance parts (external mounted sensor)

Model No. 	Compatibility	Part
ETS-22008-000001	All models	Body
ETS-22008-000006		Cable

Dust generation characteristics Reference data

Test circuit

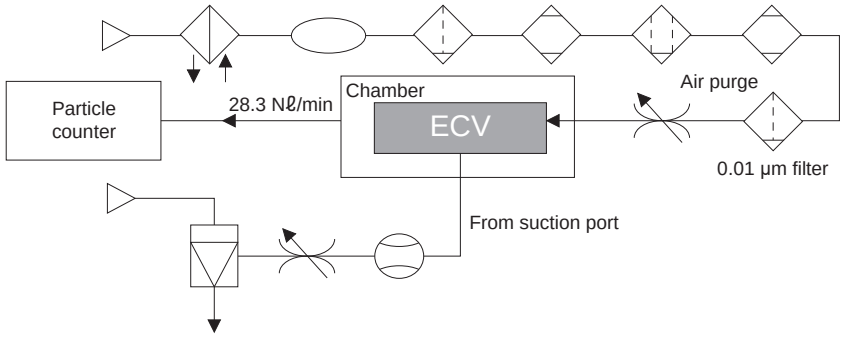

Measuring method

(1) Set a test sample in the acrylic resin chamber.

(2) Supply clean air at the same flow rate as the particle counter intake rate (28.3 Nℓ/min).

(3) Place the chamber in an ISO class 4 (class 10) clean bench.

(4) Activate the test sample, and measure changes in particle concentration over time during the specified measurement time.

(5) Test sample operating speed

Measuring conditions

Item		Description
Test sample	Model No.	Operating speed 800 mm/sec for ECV-05-40040
		Operating speed 800 mm/sec for ECV-14-40040
		Operating speed 800 mm/sec for ECV-17-40040
	Acceleration/deceleration time	0.4 sec
	Air intake	30.0 Nℓ/min for ECV-05-40040
		60.0 Nℓ/min for ECV-14-40040
		80.0 Nℓ/min for ECV-17-40040
Chamber	Internal capacity	28.3 Nℓ
Particle counter	Name	Laser dust monitor
	Min. measurable particle diameter	0.1 μm
	Intake	28.3 Nℓ/min
Setting conditions	Sampling	10 min
	Interval	40 min
	Measurement time	50 h

Dust generation data

The values in the data are measured values under the above conditions, and are not guaranteed.

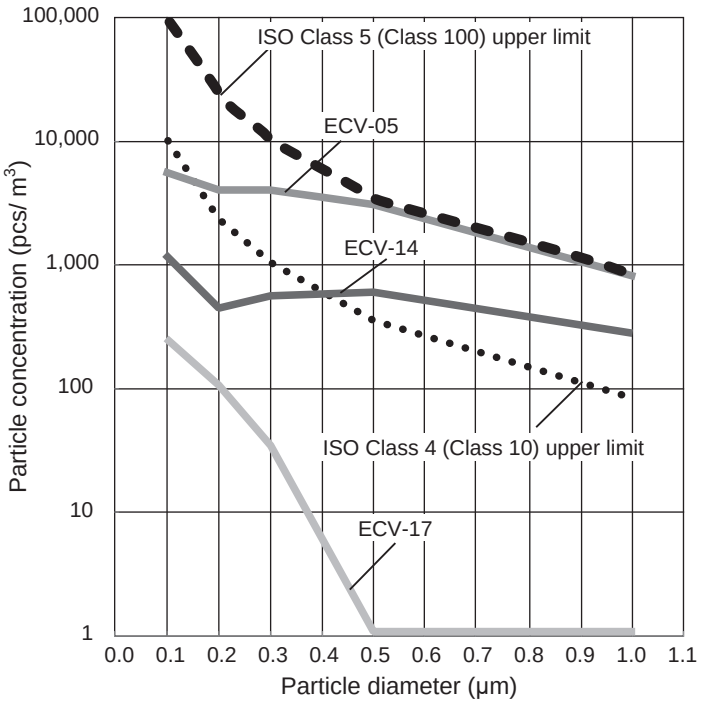

MEMO

Safety precautions

Stepper motor compatible				Servo motor compatible							
ECS	ETS	EBR	EBS	EKS	ECV	ETV	ECS	ETS Multi-Axis	ETS	EBR	EBS

EKS-L*

Slider (Fast tact/high rigidity model)

Electric actuator
Motorless specification



CONTENTS

Product introduction	Intro
Series variation	458
● Specifications/How to order/Dimensions	
· EKS-04L*	462
· EKS-05L*	470
· EKS-06L*	478
· EKS-08L*	486
· EKS-10L*	494
● Model selection	502
● Technical data	504
⚠ Safety precautions	686
Model Selection Check Sheet	708

Series variation

Type	Model No.		Applicable motor capacity (W)	Body width (mm)	Screw lead (mm)	Max. load capacity (kg) *1 Horizontal	Wall-mounted	Vertical	Stroke length (mm) and max. speed (mm/s) *2	Page
Slider		EKS-04L*-10	50 100	43	10	19	10.5	8.5	100 mm: 500 mm/s; 200: 500 mm/s; 300: 500 mm/s; 400: 500 mm/s; 500: 500 mm/s; 600: 440; 700: 340; 800: 260; 900: 210; 1000: *3 4.3 sec.	462
		EKS-04L*-16			16	14	8	7	100 mm: 800; 200: 800; 300: 800; 400: 800; 500: 800; 600: 710; 700: 540; 800: 420; 900: 340; 1000: 2.66 sec.	
		EKS-05L*-10	100	53	10	26	19	12.5	100 mm: 500; 200: 500; 300: 500; 400: 500; 500: 500; 600: 390; 700: 310; 800: 250; 900: 3.61 sec.	470
		EKS-05L*-20			20	7.5	7.5	6	100 mm: 1000; 200: 1000; 300: 1000; 400: 1000; 500: 1000; 600: 780; 700: 620; 800: 500; 900: 1.83 sec.	
		EKS-06L*-20	200	64	20	42	20	12	100 mm: 1000; 200: 1000; 300: 1000; 400: 1000; 500: 1000; 600: 980; 700: 770; 800: 630; 900: 520; 1000: 430; 1100: 370; 1200: 320; 1300: 4.08 sec.	478
		EKS-06L*-30			30	20.5	18	7.5	100 mm: 1500; 200: 1500; 300: 1500; 400: 1500; 500: 1500; 600: 1480; 700: 1160; 800: 940; 900: 780; 1000: 650; 1100: 550; 1200: 480; 1300: 2.73 sec.	
		EKS-08L*-20	400	84	20	83.5	45	23.5	100 mm: 1000; 200: 1000; 300: 1000; 400: 1000; 500: 1000; 600: 980; 700: 800; 800: 670; 900: 560; 1000: 480; 1100: 420; 1200: 360; 1300: 320; 1400: 4.7 sec.	486
		EKS-08L*-40			40	19	19	10.5	100 mm: 2000; 200: 2000; 300: 2000; 400: 2000; 500: 2000; 600: 1970; 700: 1610; 800: 1340; 900: 1130; 1000: 970; 1100: 840; 1200: 730; 1300: 650; 1400: 2.34 sec.	
		EKS-10L*-25	750	104	25	118.5	76	33.5	100 mm: 1250; 200: 1250; 300: 1250; 400: 1250; 500: 1250; 600: 1050; 700: 890; 800: 760; 900: 660; 1000: 580; 1100: 510; 1200: 2.97 sec.	494
		EKS-10L*-50			50	40	40	14.5	100 mm: 2500; 200: 2500; 300: 2500; 400: 2500; 500: 2500; 600: 2110; 700: 1790; 800: 1530; 900: 1330; 1000: 1160; 1100: 1030; 1200: 1.51 sec.	

*1: Values for max. load capacity are at acceleration/deceleration 0.5 G and straight motor mounting. Refer to the specifications for each model and the Load Capacity by Acceleration/deceleration table on page 510 to 511 for details.
*2: The max. speed is the speed when the motor mounted by the customer can output a rotation speed of 3000 rpm. The max. speed is restricted by the stroke. Do not move at speeds beyond the limit.
*3: ⏱ shows the positioning time. Maximum stroke when installed horizontally and operated at max. speed and max. acceleration/deceleration. Note that this is not the value at maximum load capacity.

How to order

How to order

EKS - 04 L E - 10 0300 N NN - M 1 N C B

Ⓐ Body size

04	Body width 43 mm
05	Body width 53 mm
06	Body width 64 mm
08	Body width 84 mm
10	Body width 104 mm

Ⓑ Motor

L	None

Ⓒ Motor mounting direction

E	Straight mounting
R	Right mounting
D	Bottom mounting
L	Left mounting

Ⓓ Screw lead

10	10 mm
16	16 mm
20	20 mm
25	25 mm
30	30 mm
40	40 mm
50	50 mm

Ⓔ Stroke length

0100 to 1500	100 mm (In 100 mm increments) 1500 mm

Ⓕ Brake

N	None

Ⓖ Mounted motor specification

M Y P	Refer to the list on the page at right

Ⓗ Motor capacity

H	50 W
1	100 W
2	200 W
4	400 W
8	750 W

Ⓘ Motor shaft fixing method *1 *2 *3

N	For straight mounting
D	Flat
K	Key
M	Friction locking

Ⓙ Origin sensor

N	None
C	Yes

Ⓚ Limit sensor

N	None
B	Yes

*1: For straight mounting of all body sizes, select "For straight mounting."
*2: For side mounting of EBS-04, 05, and 06 only, select "Flat" or "Key."
*3: For side mounting of EBS-06, 08, and 10 only, select "Friction locking."

Example of model No.

EKS-04LE-100300NNN-M1NCB

Body size	: 04 Series
Motor	: None
Motor mounting direction	: Straight mounting
Screw lead	: 10 mm
Stroke length	: 300 mm
Mounted motor specification	: M (refer to the table on the page at right)
Motor capacity	: 100 W
Motor shaft fixing method	: Straight
Origin sensor	: Yes
Limit sensor	: Yes

*This product is composed of an actuator (and motor mounting parts) only; there is no motor attached.
The user must prepare, mount, and adjust the motor and driver.

List of servo motors recommended for mounting

Code	Manufacturer	Series	50 W (EKS-04 Series)	100 W (EKS-04/05 Series)
M	Mitsubishi Electric Corporation	MELSERVO J4	HG-KR053	HG-KR13
		MELSERVO J5	HG-KT053W	HK-KT13W
M	Delta Electronics Co., Ltd.	ECMA-C	ECMA-C1040F	ECMA-C10401
M	Sanyo Corporation, Ltd.	SANMOTION R *1	R2□A04005	R2□A04010
Y	YASKAWA Electric Corporation	Σ-V	SGMJV-A5	SGMJV-01
		Σ-7	SGM7J-A5	SGM7J-01
Y	Keyence Corporation	SV	SV-□005	SV-□010
		SV2	SV2-□005	SV2-□010
P	Panasonic Corporation	MINAS A5	MSMD5A	MSMD01
		MINAS A6	MSMF5A	MSMF01
M	OMRON Corporation	G5	R88M-K0503	R88M-K10030
		1S	-	R88M-1M10030
M	Fuji Electric Co., Ltd.	ALPHA7 GYS	GYS500D7-□B2□	GYS101D7-□B2□
		ALPHA7 GYB	-	-
M	FANUC CORPORATION	βis series	βis0.2/5000	βis0.3/5000
P	Bosch Rexroth AG	MSM	MSM019A	MSM019B
M	Rockwell Automation, Inc.	TLP	TLP-A046-005-DKA□2	TLP-A046-010-DKA□2
M	SIEMENS AG	1FK2 *2	1FK2102-0AG0	1FK2102-1AG0

Code	Manufacturer	Series	200 W (EKS-06 Series)	400 W (EKS-08 Series)	750 W (EKS-10 Series)
M	Mitsubishi Electric Corporation	MELSERVO J4	HG-KR23	HG-KR43	HG-KR73
		MELSERVO J5	HK-KT23W	HK-KT43W	HK-KT7M3W
M	Delta Electronics Co., Ltd.	ECMA-C	ECMA-C10602	ECMA-C10604	ECMA-C10807
M	Sanyo Corporation, Ltd.	SANMOTION R	R2□A06020	R2□A06040	-
Y	YASKAWA Electric Corporation	Σ-V	SGMJV-02	SGMJV-04	SGMJV-08
		Σ-7	SGM7J-02	SGM7J-04	SGM7J-08
Y	Keyence Corporation	SV	SV-□020	SV-□040	SV-□075
		SV2	SV2-□020	SV2-□040	SV2-□075
P	Panasonic Corporation	MINAS A5	MSMD02	MSMD04	MSMD08
		MINAS A6	MSMF02	MSMF04	MSMF08
P	OMRON Corporation	G5	R88M-K20030	R88M-K40030	R88M-K75030
		1S	R88M-1M20030	R88M-1M40030	R88M-1M75030
M	Fuji Electric Co., Ltd.	ALPHA7 GYS	GYS201D7-□B2□	GYS401D7-□B2□	GYS751D7-□B2□
		ALPHA7 GYB	GYB201D7-□B2□	GYB401D7-□B2□	GYB751D7-□B2□
P	Bosch Rexroth AG	MSM	MSM031B	MSM031C	MSM041B
M	Rockwell Automation, Inc.	TLP	TLP-A070-020-DKA□2	TLP-A070-040-DKA□2	TLP-A090-075-DKA□2
M	SIEMENS AG	1FK2 *2	1FK2203-2AG0	1FK2203-4AG0	1FK2204-5AK0

* Contact CKD for mounting other than the above motors and products of other motor manufacturers.
* Contact CKD for brake use with vertical use, etc.
*1: Motor side/bottom mounting direction (R: right, D: bottom, L: left) is not supported.
*2: The servo motor is subject to the regulations of Export Trade Control Order Appendix Table 1 Item 7 (8), and is applicable with regard to its specifications. (as of January 2021)



Electric actuator (motorless) Slider

EKS-04LE

Straight motor mounting

● Servo motor capacity: 50 W/100 W

How to order

EKS - 04 L E - 10 0300 N NN - M 1 N C B

(A) (B) (C) (D) (E) (F) (G) (H) (I) (J) (K)

(A) Body size

04	Body width 43 mm

(B) Motor

L	None

(C) Motor mounting direction

E	Straight mounting

(D) Screw lead

10	10 mm
16	16 mm

(E) Stroke length *1

0100 to 0900	100 mm (In 100 mm increments) 900 mm

(F) Brake

N	None

(G) Mounted motor specification

M	Select the mounted motor specification from the table at right.
Y	
P	

(H) Motor capacity

H	50 W
1	100 W

(I) Motor shaft fixing method

N	For straight mounting

(J) Origin sensor *2

N	None
C	Yes

(K) Limit sensor *2

N	None
B	Yes

Manufacturer	50 W	100 W
Mitsubishi Electric Corporation	M	M
Delta Electronics Co., Ltd.	M	M
Sanyo Denki Co., Ltd.	M	M
YASKAWA Electric Corporation	Y	Y
Keyence Corporation	Y	Y
Panasonic Corporation	P	P
OMRON Corporation	M	M
Fuji Electric Co., Ltd.	M	M
FANUC CORPORATION	M	M
Bosch Rexroth AG	P	P
Rockwell Automation, Inc.	M	M
SIEMENS AG	M	M

*Refer to page 461 for the motor model No.

*1: For the stroke length per 50 mm, contact CKD.
*2: Origin sensor and limit sensor are available as a set. As it is both-or-nothing, select "None" for both.

Specifications

Applicable motor capacity		50 W/100 W servo motor	
Drive method		Ball screw ø10	
Stroke length	mm	100 to 900	
Screw lead	mm	10	16
Max. load capacity *1 *2	kg Horizontal	19	14
	Wall-mounted	10.5	8
	Vertical	8.5	7
Max. speed	mm/s	500	800
Rated thrust *2	N	179	112
Repeatability	mm	±0.01	
Lost motion	mm	0.1 or less	
Static allowable load	N	2140	
Static allowable moment	N·m	MP: 103, MY: 103, MR: 58	
Operating ambient temperature, humidity		0 to 40°C (no freezing) 20 to 80% RH (no condensation)	
Storage ambient temperature, humidity		0 to 40°C (no freezing) 20 to 80% RH (no condensation)	
Atmosphere		No corrosive gas, explosive gas, or dust	

*1: Values for max. load capacity are at acceleration/deceleration 0.5 G. Refer to page 510 for details.
*2: Rated thrust and max. load capacity are guideline values assuming that the motor mounted will output the rated torque.

Stroke and max. speed

(mm/s)

Stroke length / Screw lead	100 to 500	600	700	800	900
10	500	440	340	260	210
16	800	710	540	420	340

*The max. speed is the speed when the motor mounted by the customer can output a rotation speed of 3000 rpm.
The max. speed is restricted by the stroke. Do not move at speeds beyond the limit.

Allowable overhang length

*Refer to page 504 for details.

Moment direction

MP MY MR

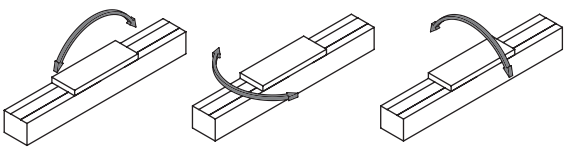

Dimensions Straight motor mounting

● EKS-04LE

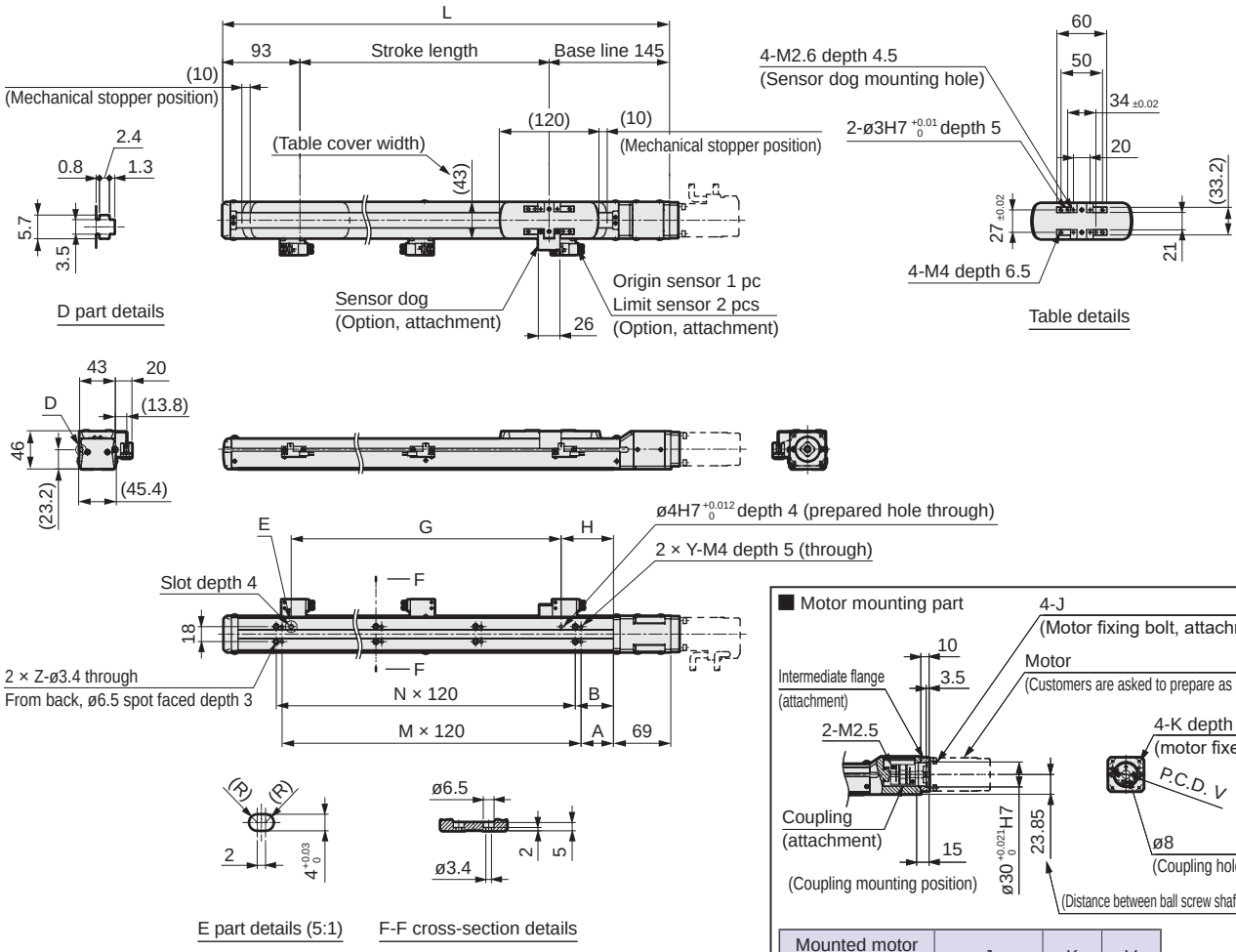

Mounted motor specification	J	K	V
M	M4 × L10	M4	46
Y	M4 × L10	M4	46
P	M3 × L10	M3	45

Stroke code	0100	0200	0300	0400	0500	0600	0700	0800	0900
Stroke length (mm)	100	200	300	400	500	600	700	800	900
L	338	438	538	638	738	838	938	1038	1138
A	59	42	39	89	79	69	59	42	39
B	66	56	46	96	86	76	66	56	46
G	125	225	325	425	525	625	725	825	925
H	48	63	63	48	63	63	48	63	63
M	1	2	3	3	4	5	6	7	8
N	1	2	3	3	4	5	6	7	8
Y	2	3	4	4	5	6	7	8	9
Z	2	3	4	4	5	6	7	8	9
Weight (kg)	1.7	2.1	2.5	2.9	3.2	3.6	4	4.4	4.7

List of attachments

[Motor mounting parts]

Mounted motor specification	Coupling	Intermediate flange fixing bolt	Motor mounting bolt	
			Size	Quantity
M	Included at shipment	Included at shipment	M4	4
Y			M4	4
P			M3	4

[Origin sensor, limit sensor]

Manufacturer	Model	Included quantity
OMRON Corporation	EE-SX674	3

*Refer to page 512 for sensor specifications.



Electric actuator (motorless) Slider

EKS-04L*

Motor side mounting (left, right, bottom)

● Servo motor capacity: 50 W/100 W

How to order

EKS - 04 (A) L (B) R (C) - 10 (D) 0300 (E) N (F) NN - M (G) 1 (H) D (I) C (J) B (K)

(A) Body size

04	Body width 43 mm

(B) Motor

L	None

(C) Motor mounting direction

R	Right mounting
D	Bottom mounting
L	Left mounting

(D) Screw lead

10	10 mm
16	16 mm

(E) Stroke length

0100 to 0900	100 mm (In 100 mm increments) 900 mm

(F) Brake

N	None

(G) Mounted motor specification

M	Select the mounted motor specification from the table at right.
Y	
P	

(H) Motor capacity

H	50 W
1	100 W

(I) Motor shaft fixing method

D	Flat
K	Key

(J) Origin sensor *2

N	None
C	Yes

(K) Limit sensor *2

N	None
B	Yes

Manufacturer	50 W	100 W
Mitsubishi Electric Corporation	M	M
Delta Electronics Co., Ltd.	M	M
Sanyo Denki Co., Ltd.	M	M
YASKAWA Electric Corporation	Y	Y
Keyence Corporation	Y	Y
Panasonic Corporation	P	P
OMRON Corporation	M	M
Fuji Electric Co., Ltd.	M	M
FANUC CORPORATION	M	M
Bosch Rexroth AG	P	P
Rockwell Automation, Inc.	M	M
SIEMENS AG	M	M

*Refer to page 461 for the motor model No.

*1: For the stroke length per 50 mm, contact CKD.
*2: Origin sensor and limit sensor are available as a set. As it is both-or-nothing, select "None" for both.

Specifications

Applicable motor capacity		50 W/100 W servo motor	
Drive method		Ball screw ø10	
Stroke length	mm	100 to 900	
Screw lead	mm	10	16
Max. load capacity *1*2	kg Horizontal	19	14
	Wall-mounted	10.5	8
	Vertical	8.5	7
Max. speed	mm/s	500	800
Rated thrust *2	N	179	112
Repeatability	mm	±0.01	
Lost motion	mm	0.1 or less	
Static allowable load	N	2140	
Static allowable moment	N·m	MP: 103, MY: 103, MR: 58	
Operating ambient temperature, humidity		0 to 40°C (no freezing) 20 to 80% RH (no condensation)	
Storage ambient temperature, humidity		0 to 40°C (no freezing) 20 to 80% RH (no condensation)	
Atmosphere		No corrosive gas, explosive gas, or dust	

*1: Values for max. load capacity are at acceleration/deceleration 0.5 G. Refer to page 510 for details.
*2: Rated thrust and max. load capacity are guideline values assuming that the motor mounted will output the rated torque.

Stroke and max. speed

(mm/s)

Stroke length / Screw lead	100 to 500	600	700	800	900
10	500	440	340	260	210
16	800	710	540	420	340

*The max. speed is the speed when the motor mounted by the customer can output a rotation speed of 3000 rpm.
The max. speed is restricted by the stroke. Do not move at speeds beyond the limit.

Allowable overhang length

*Refer to page 504 for details.

Moment direction

MP MY MR

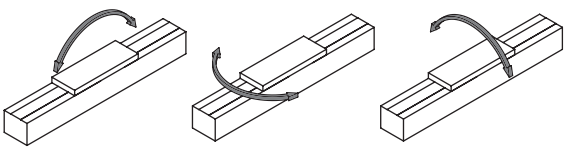

Dimensions Motor right-side mounting

● EKS-04LR

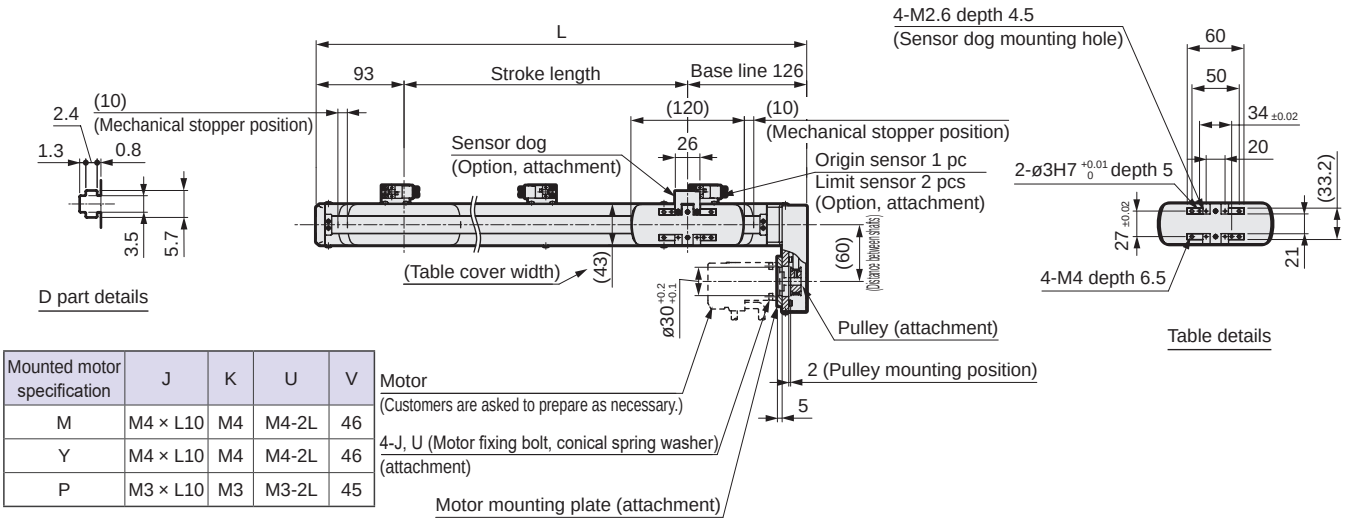

Mounted motor specification	J	K	U	V
M	M4 × L10	M4	M4-2L	46
Y	M4 × L10	M4	M4-2L	46
P	M3 × L10	M3	M3-2L	45

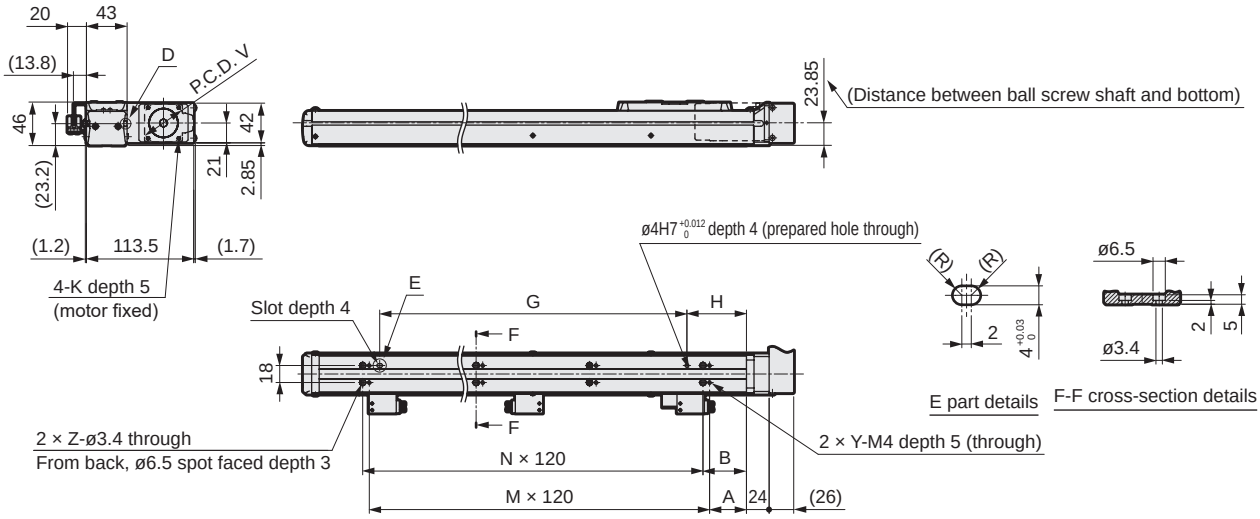

Stroke code	0100	0200	0300	0400	0500	0600	0700	0800	0900
Stroke length (mm)	100	200	300	400	500	600	700	800	900
L	319	419	519	619	719	819	919	1019	1119
A	59	42	39	89	79	69	59	42	39
B	66	56	46	96	86	76	66	56	46
G	125	225	325	425	525	625	725	825	925
H	48	63	63	48	63	63	48	63	63
M	1	2	3	3	4	5	6	7	8
N	1	2	3	3	4	5	6	7	8
Y	2	3	4	4	5	6	7	8	9
Z	2	3	4	4	5	6	7	8	9
Weight (kg)	1.9	2.3	2.7	3	3.4	3.8	4.2	4.5	4.9

List of attachments

[Motor mounting parts]

Mounted motor specification	Pulley	Motor mounting plate fixing bolt	Motor mounting bolt	
			Size	Quantity
M	Included at shipment	Included at shipment	M4	4
Y			M4	4
P			M3	4

[Origin sensor, limit sensor]

Manufacturer	Model	Included quantity
OMRON Corporation	EE-SX674	3

*Refer to page 512 for sensor specifications.

Dimensions Motor bottom mounting

● EKS-04LD

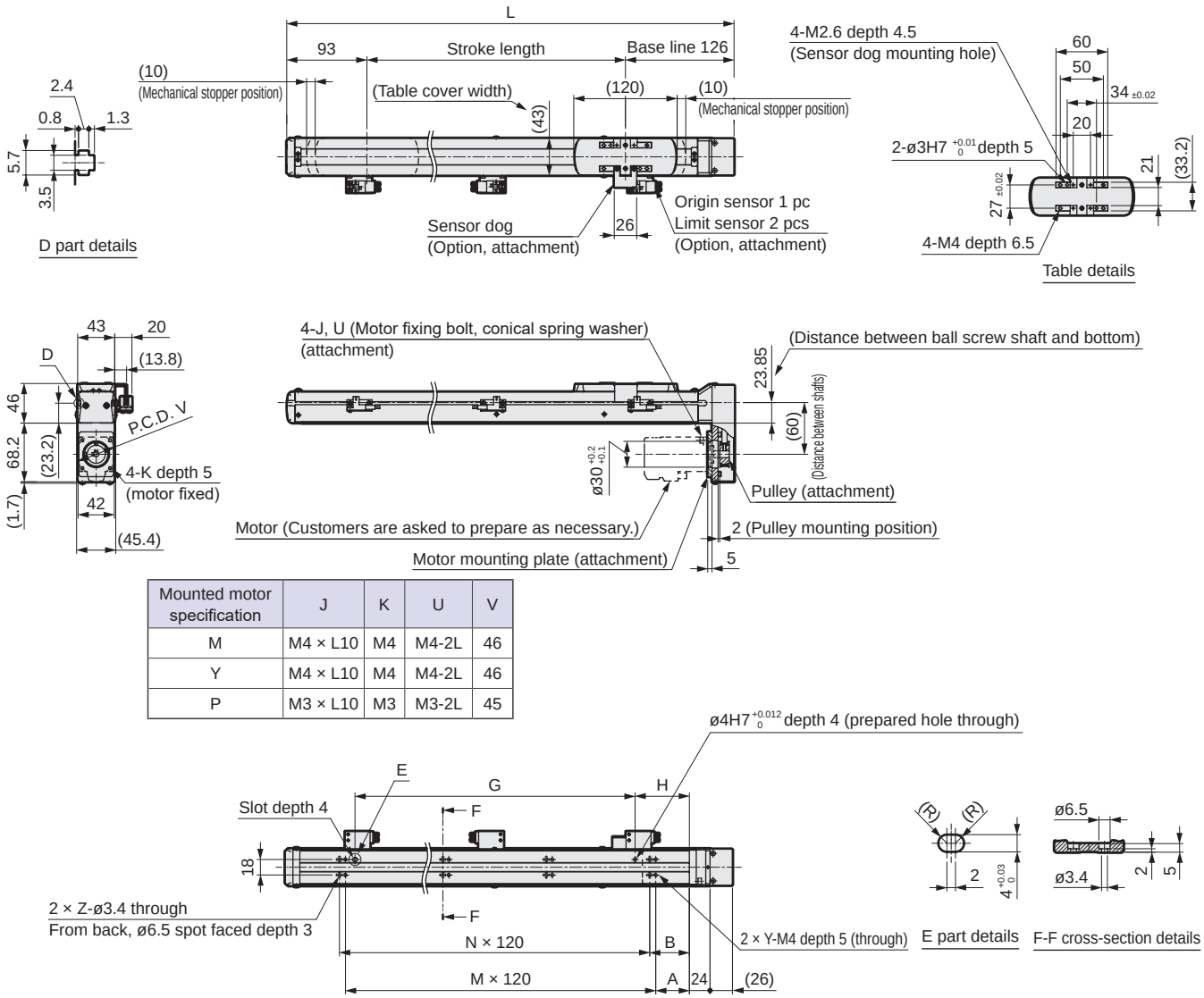

Mounted motor specification	J	K	U	V
M	M4 × L10	M4	M4-2L	46
Y	M4 × L10	M4	M4-2L	46
P	M3 × L10	M3	M3-2L	45

Stroke code	0100	0200	0300	0400	0500	0600	0700	0800	0900
Stroke length (mm)	100	200	300	400	500	600	700	800	900
L	319	419	519	619	719	819	919	1019	1119
A	59	42	39	89	79	69	59	42	39
B	66	56	46	96	86	76	66	56	46
G	125	225	325	425	525	625	725	825	925
H	48	63	63	48	63	63	48	63	63
M	1	2	3	3	4	5	6	7	8
N	1	2	3	3	4	5	6	7	8
Y	2	3	4	4	5	6	7	8	9
Z	2	3	4	4	5	6	7	8	9
Weight (kg)	1.9	2.3	2.7	3	3.4	3.8	4.2	4.5	4.9

List of attachments

[Motor mounting parts]

Mounted motor specification	Pulley	Motor mounting plate fixing bolt	Motor mounting bolt	
			Size	Quantity
M	Included at shipment	Included at shipment	M4	4
Y			M4	4
P			M3	4

[Origin sensor, limit sensor]

Manufacturer	Model	Included quantity
OMRON Corporation	EE-SX674	3

*Refer to page 512 for sensor specifications.

Dimensions Motor left-side mounting

● EKS-04LL

Mounted motor specification	J	K	U	V
M	M4 × L10	M4	M4-2L	46
Y	M4 × L10	M4	M4-2L	46
P	M3 × L10	M3	M3-2L	45

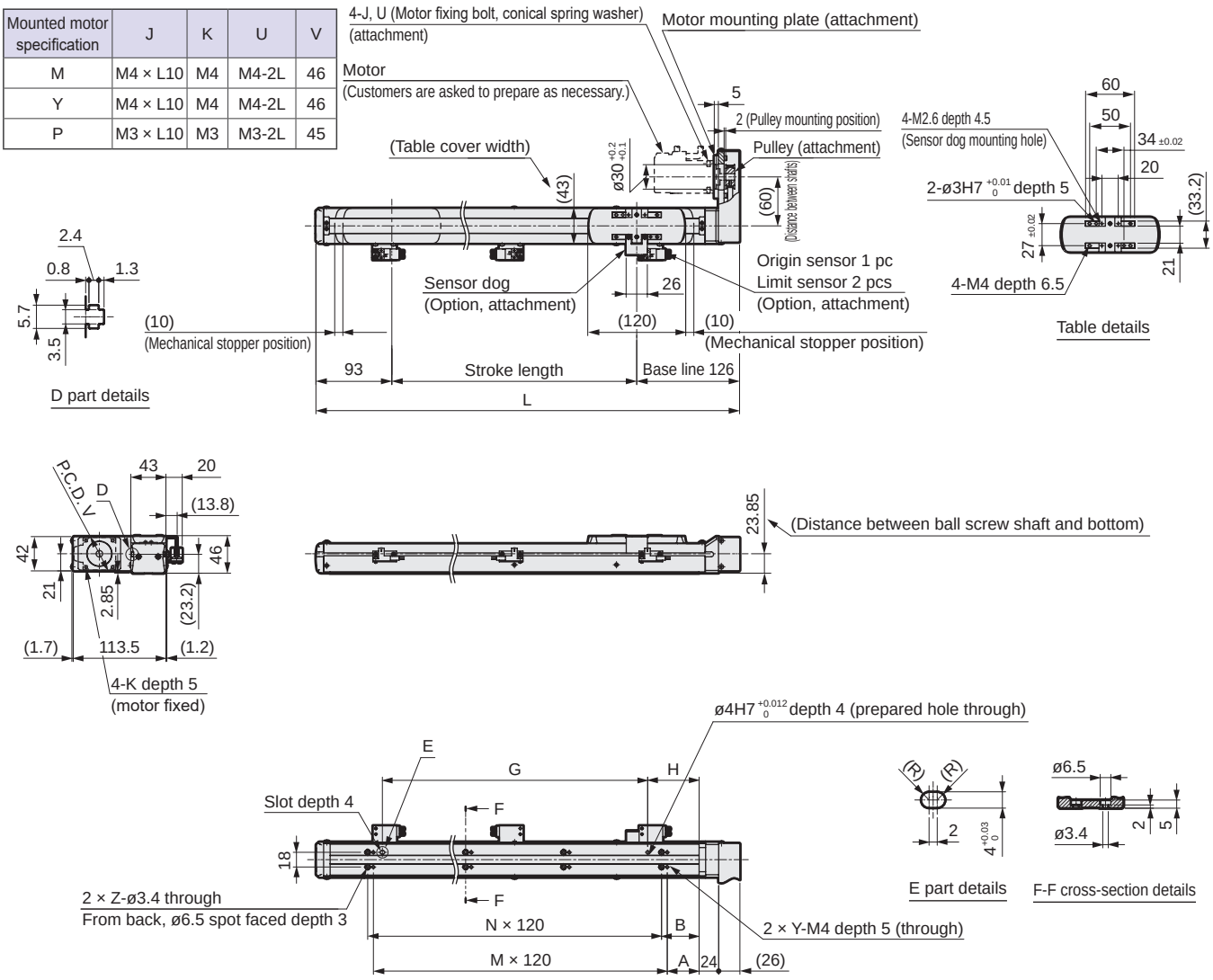

Stroke code	0100	0200	0300	0400	0500	0600	0700	0800	0900
Stroke length (mm)	100	200	300	400	500	600	700	800	900
L	319	419	519	619	719	819	919	1019	1119
A	59	42	39	89	79	69	59	42	39
B	66	56	46	96	86	76	66	56	46
G	125	225	325	425	525	625	725	825	925
H	48	63	63	48	63	63	48	63	63
M	1	2	3	3	4	5	6	7	8
N	1	2	3	3	4	5	6	7	8
Y	2	3	4	4	5	6	7	8	9
Z	2	3	4	4	5	6	7	8	9
Weight (kg)	1.9	2.3	2.7	3	3.4	3.8	4.2	4.5	4.9

List of attachments

[Motor mounting parts]

Mounted motor specification	Pulley	Motor mounting plate fixing bolt	Motor mounting bolt	
			Size	Quantity
M	Included at shipment	Included at shipment	M4	4
Y			M4	4
P			M3	4

[Origin sensor, limit sensor]

Manufacturer	Model	Included quantity
OMRON Corporation	EE-SX674	3

*Refer to page 512 for sensor specifications.

Common options

Dimensions for straight motor mounting

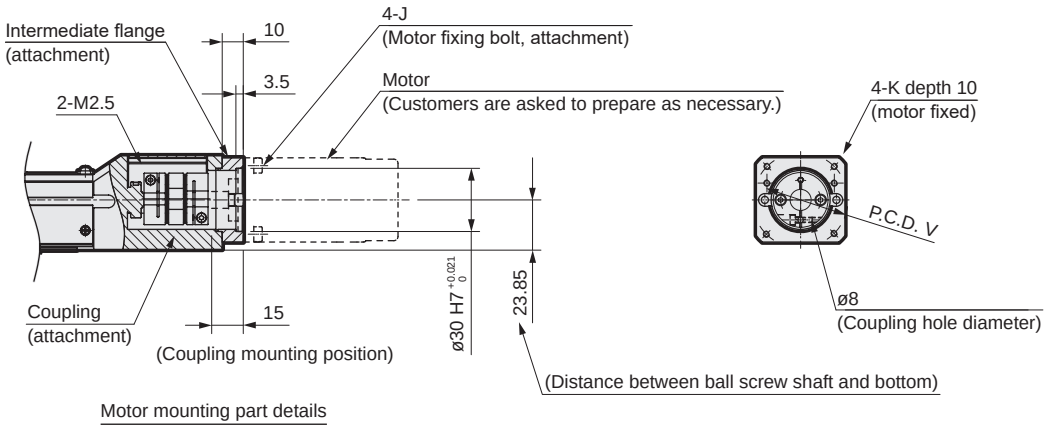

Motor mounting part details

Mounted motor specification	J	K	V
M	M4 × L10	M4	46
Y	M4 × L10	M4	46
P	M3 × L10	M3	45

For motor mounting on side/bottom

Motor shaft fixing method

Pulley (attachment)

Motor shaft fixing method: Flat	Motor shaft fixing method: Key
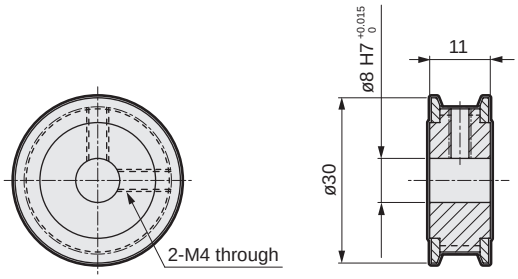	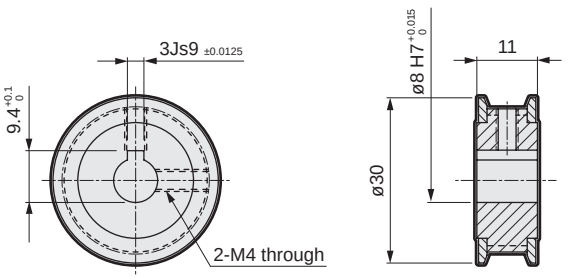

MEMO



Electric actuator (motorless) Slider

EKS-05LE

Straight motor mounting

● Servo motor capacity: 100 W

How to order

EKS - 05 L E - 10 0300 N NN - M 1 N C B

(A) (B) (C) (D) (E) (F) (G) (H) (I) (J) (K)

(A) Body size

05	Body width 53 mm

(B) Motor

L	None

(C) Motor mounting direction

E	Straight mounting

(D) Screw lead

10	10 mm
20	20 mm

(E) Stroke length *1

0100 to 0900	100 mm (In 100 mm increments) 900 mm

(F) Brake

N	None

(G) Mounted motor specification

M	Select the mounted motor specification from the table at right.
Y	
P	

(H) Motor capacity

1	100 W

(I) Motor shaft fixing method

N	For straight mounting

(J) Origin sensor *2

N	None
C	Yes

(K) Limit sensor *2

N	None
B	Yes

Manufacturer	100 W
Mitsubishi Electric Corporation	M
Delta Electronics Co., Ltd.	M
Sanyo Denki Co., Ltd.	M
YASKAWA Electric Corporation	Y
Keyence Corporation	Y
Panasonic Corporation	P
OMRON Corporation	M
Fuji Electric Co., Ltd.	M
FANUC CORPORATION	M
Bosch Rexroth AG	P
Rockwell Automation, Inc.	M
SIEMENS AG	M

*Refer to page 461 for the motor model No.

*1: For the stroke length per 50 mm, contact CKD.
*2: Origin sensor and limit sensor are available as a set. As it is both-or-nothing, select "None" for both.

Specifications

Applicable motor capacity		100 W servo motor	
Drive method		Ball screw ø13	
Stroke length	mm	100 to 900	
Screw lead	mm	10	20
Max. load capacity *1 *2	kg Horizontal	26	7.5
	Wall-mounted	19	7.5
	Vertical	12.5	6
Max. speed	mm/s	500	1000
Rated thrust *2	N	179	89
Repeatability	mm	±0.01	
Lost motion	mm	0.1 or less	
Static allowable load	N	3100	
Static allowable moment	N·m	MP: 147, MY: 147, MR: 149	
Operating ambient temperature, humidity		0 to 40°C (no freezing) 20 to 80% RH (no condensation)	
Storage ambient temperature, humidity		0 to 40°C (no freezing) 20 to 80% RH (no condensation)	
Atmosphere		No corrosive gas, explosive gas, or dust	

*1: Values for max. load capacity are at acceleration/deceleration 0.5 G. Refer to page 510 for details.
*2: Rated thrust and max. load capacity are guideline values assuming that the motor mounted will output the rated torque.

Stroke and max. speed

(mm/s)

Stroke length / Screw lead	100 to 600	700	800	900
10	500	390	310	250
20	1000	780	620	500

*The max. speed is the speed when the motor mounted by the customer can output a rotation speed of 3000 rpm.
The max. speed is restricted by the stroke. Do not move at speeds beyond the limit.

Allowable overhang length

*Refer to page 504 for details.

Moment direction

MP MY MR

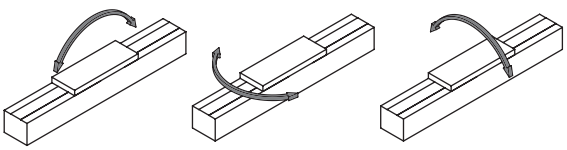

Dimensions Straight motor mounting

● EKS-05LE

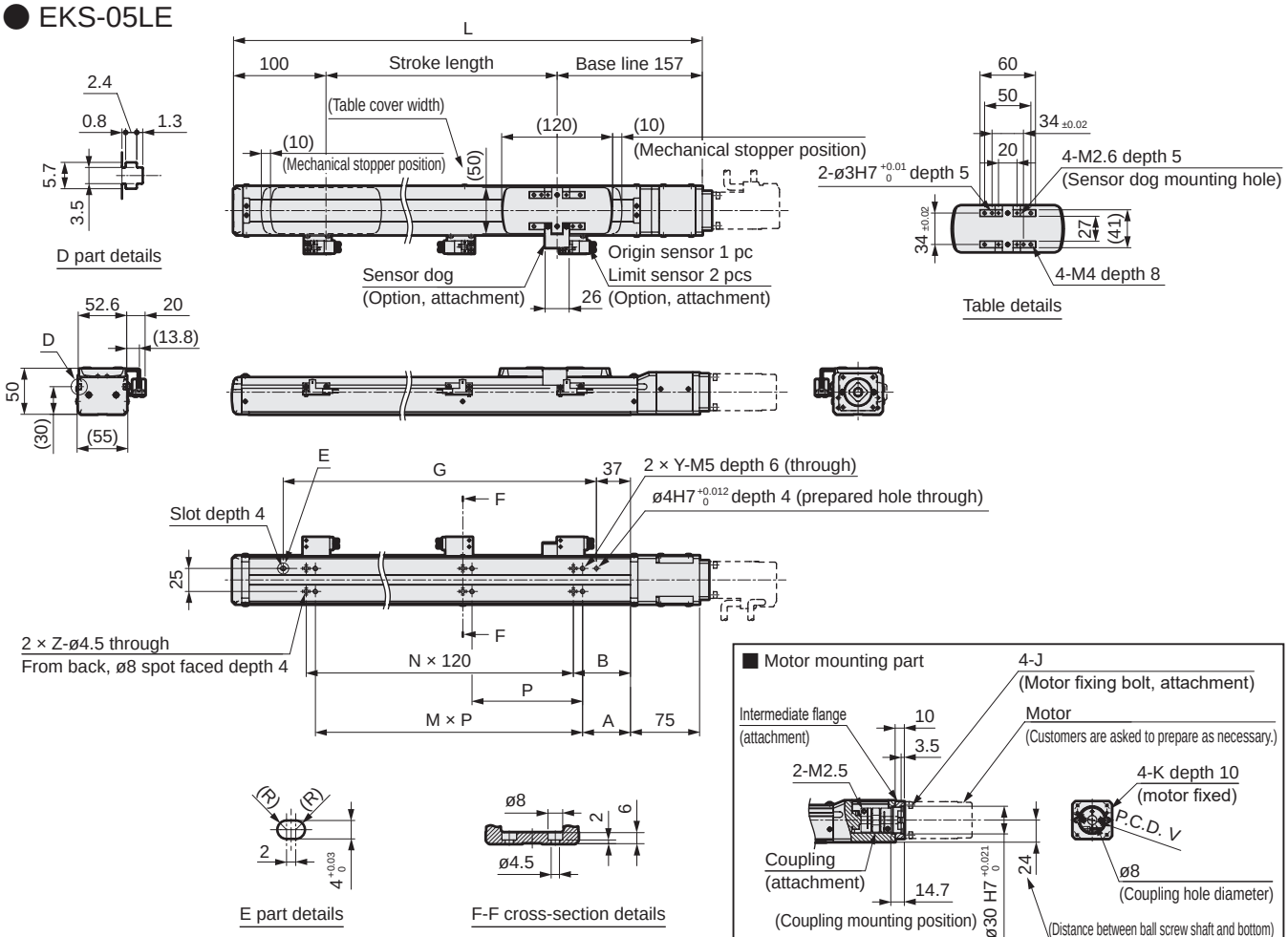

Mounted motor specification	J	K	V
M	M4 × L10	M4	46
Y	M4 × L10	M4	46
P	M3 × L10	M3	45

Stroke code	0100	0200	0300	0400	0500	0600	0700	0800	0900
Stroke length (mm)	100	200	300	400	500	600	700	800	900
L	357	457	557	657	757	857	957	1057	1157
A	12	52	27	92	82	72	62	52	27
B	72	62	52	102	92	82	72	62	52
G	190	290	390	490	590	690	790	890	990
M	2	2	3	3	4	5	6	7	8
N	1	2	3	3	4	5	6	7	8
P	120								
Y	3	3	4	4	5	6	7	8	9
Z	2	3	4	4	5	6	7	8	9
Weight (kg)	2.6	3.1	3.7	4.2	4.8	5.4	5.9	6.5	7

List of attachments

[Motor mounting parts]

Mounted motor specification	Coupling	Intermediate flange fixing bolt	Motor mounting bolt	
			Size	Quantity
M	Included at shipment	Included at shipment	M4	4
Y			M4	4
P			M3	4

[Origin sensor, limit sensor]

Manufacturer	Model	Included quantity
OMRON Corporation	EE-SX674	3

*Refer to page 512 for sensor specifications.



Electric actuator (motorless) Slider

EKS-05L*

Motor side mounting (left, right, bottom)

● Servo motor capacity: 100 W

How to order

EKS - 05 L R - 10 0300 N NN - M 1 D C B

Ⓐ Ⓑ Ⓒ Ⓓ Ⓔ Ⓕ Ⓖ Ⓗ Ⓘ Ⓙ Ⓚ

Ⓐ Body size	
05	Body width 53 mm

Ⓑ Motor	
L	None

Ⓒ Motor mounting direction	
R	Right mounting
D	Bottom mounting
L	Left mounting

Ⓓ Screw lead	
10	10 mm
20	20 mm

Ⓔ Stroke length *1	
0100 to 0900	100 mm (In 100 mm increments) 900 mm

Ⓕ Brake	
N	None

Ⓖ Mounted motor specification	
M	Select the mounted motor specification from the table at right.
Y	
P	

Ⓗ Motor capacity	
1	100 W

Ⓘ Motor shaft fixing method	
D	Flat
K	Key

Ⓙ Origin sensor *2	
N	None
C	Yes

Ⓚ Limit sensor *2	
N	None
B	Yes

Manufacturer	100 W
Mitsubishi Electric Corporation	M
Delta Electronics Co., Ltd.	M
Sanyo Denki Co., Ltd.	M
YASKAWA Electric Corporation	Y
Keyence Corporation	Y
Panasonic Corporation	P
OMRON Corporation	M
Fuji Electric Co., Ltd.	M
FANUC CORPORATION	M
Bosch Rexroth AG	P
Rockwell Automation, Inc.	M
SIEMENS AG	M

*Refer to page 461 for the motor model No.

*1: For the stroke length per 50 mm, contact CKD.
*2: Origin sensor and limit sensor are available as a set. As it is both-or-nothing, select "None" for both.

Specifications

Applicable motor capacity		100 W servo motor	
Drive method		Ball screw ø13	
Stroke length	mm	100 to 900	
Screw lead	mm	10	20
Max. load capacity *1 *2	kg Horizontal	26	7.5
	kg Wall-mounted	19	7.5
	kg Vertical	11.5	5
Max. speed	mm/s	500	1000
Rated thrust *2	N	179	89
Repeatability	mm	±0.01	
Lost motion	mm	0.1 or less	
Static allowable load	N	3100	
Static allowable moment	N·m	MP: 147, MY: 147, MR: 149	
Operating ambient temperature, humidity		0 to 40°C (no freezing) 20 to 80% RH (no condensation)	
Storage ambient temperature, humidity		0 to 40°C (no freezing) 20 to 80% RH (no condensation)	
Atmosphere		No corrosive gas, explosive gas, or dust	

*1: Values for max. load capacity are at acceleration/deceleration 0.5 G. Refer to page 510 for details.
*2: Rated thrust and max. load capacity are guideline values assuming that the motor mounted will output the rated torque.

Stroke and max. speed

(mm/s)

Stroke length / Screw lead	100 to 600	700	800	900
10	500	390	310	250
20	1000	780	620	500

*The max. speed is the speed when the motor mounted by the customer can output a rotation speed of 3000 rpm.
The max. speed is restricted by the stroke. Do not move at speeds beyond the limit.

Allowable overhang length

*Refer to page 504 for details.

Moment direction

MP MY MR

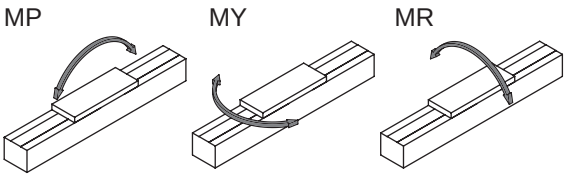

Dimensions Motor right-side mounting

● EKS-05LR

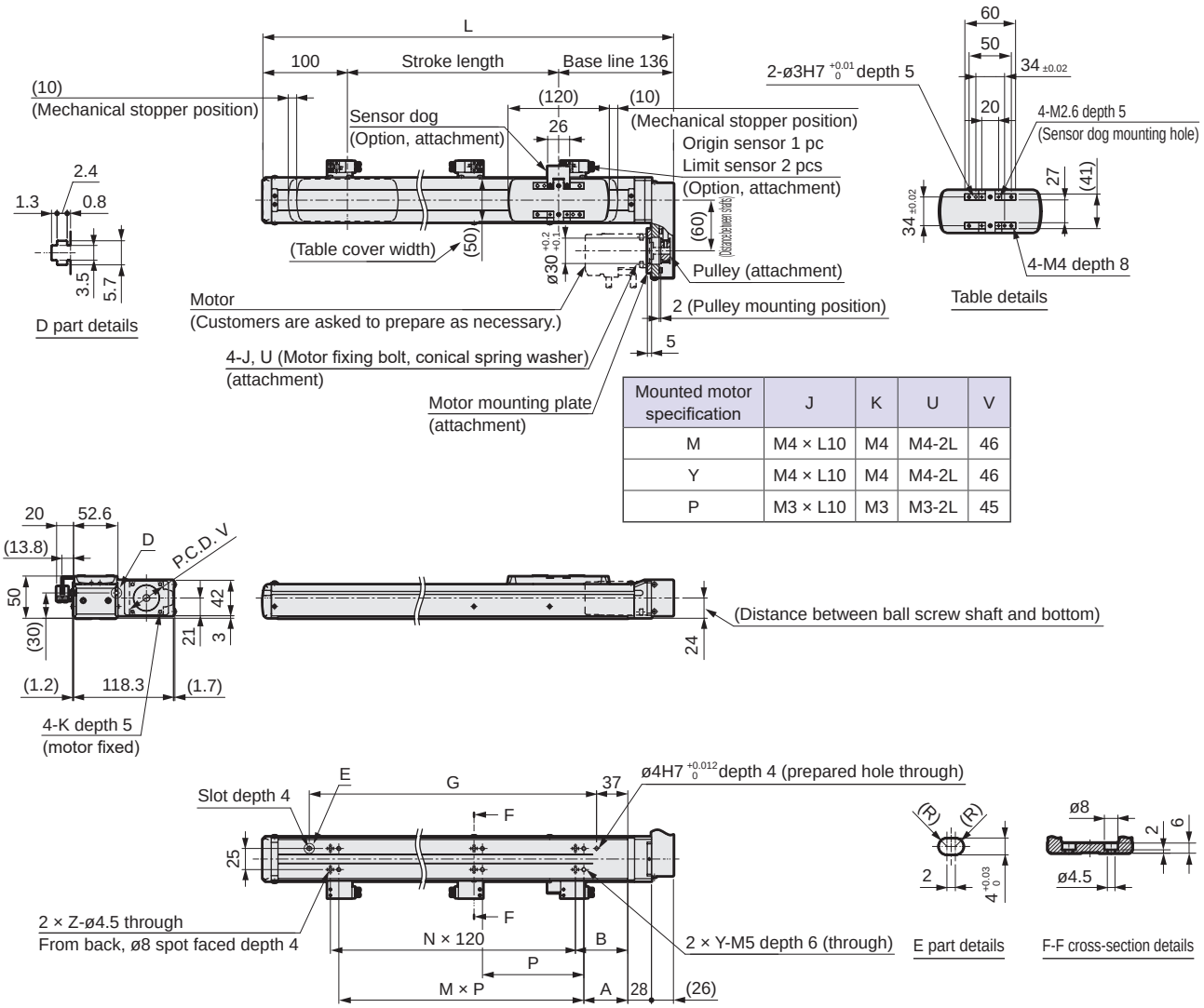

Mounted motor specification	J	K	U	V
M	M4 × L10	M4	M4-2L	46
Y	M4 × L10	M4	M4-2L	46
P	M3 × L10	M3	M3-2L	45

Stroke code	0100	0200	0300	0400	0500	0600	0700	0800	0900
Stroke length (mm)	100	200	300	400	500	600	700	800	900
L	336	436	536	636	736	836	936	1036	1136
A	12	52	27	92	82	72	62	52	27
B	72	62	52	102	92	82	72	62	52
G	190	290	390	490	590	690	790	890	990
M	2	2	3	3	4	5	6	7	8
N	1	2	3	3	4	5	6	7	8
P	120								
Y	3	3	4	4	5	6	7	8	9
Z	2	3	4	4	5	6	7	8	9
Weight (kg)	2.7	3.3	3.8	4.4	4.9	5.5	6	6.6	7.2

List of attachments

[Motor mounting parts]

Mounted motor specification	Pulley	Motor mounting plate fixing bolt	Motor mounting bolt	
			Size	Quantity
M	Included at shipment	Included at shipment	M4	4
Y			M4	4
P			M3	4

[Origin sensor, limit sensor]

Manufacturer	Model	Included quantity
OMRON Corporation	EE-SX674	3

*Refer to page 512 for sensor specifications.

Dimensions Motor bottom mounting

● EKS-05LD

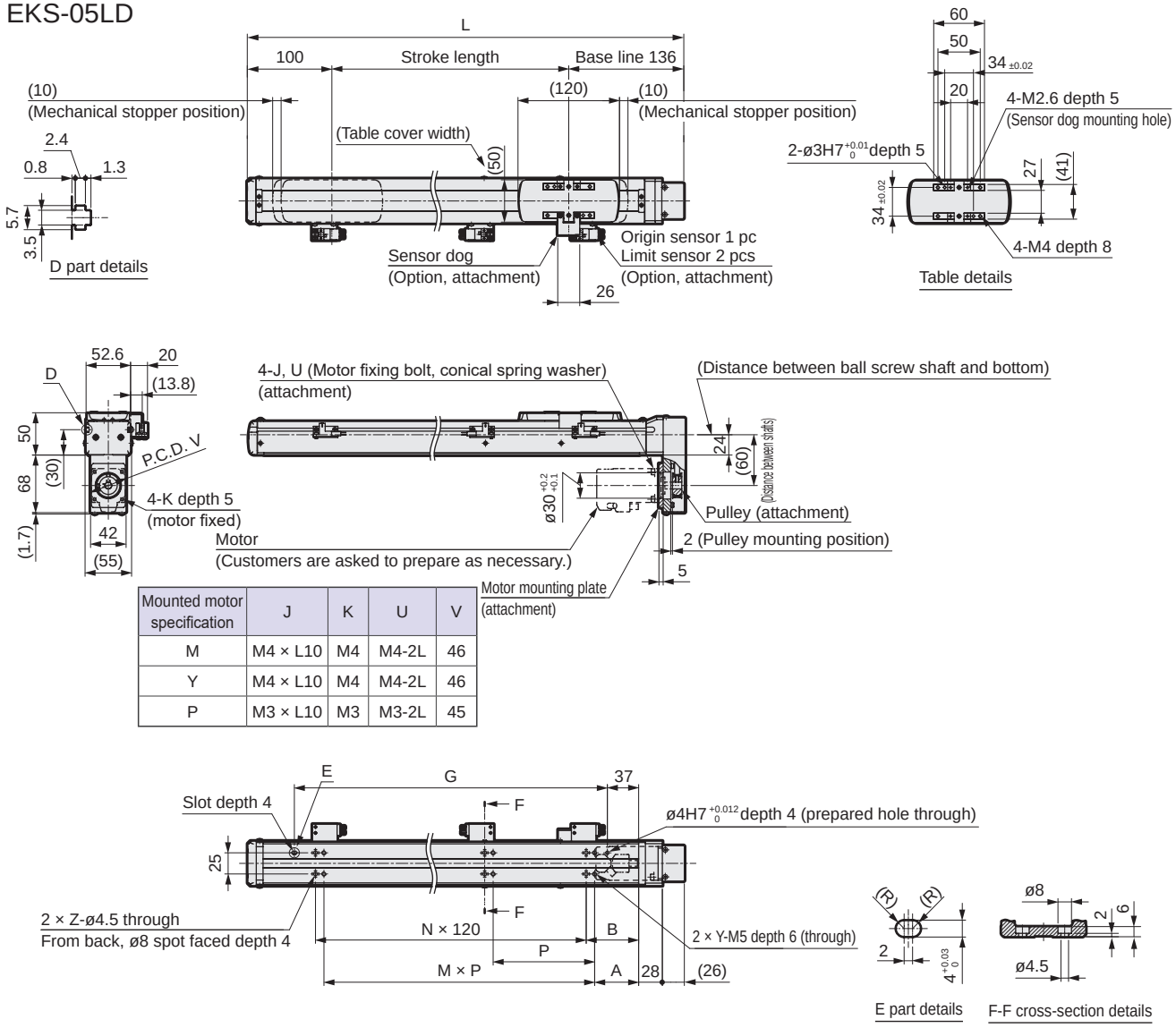

Mounted motor specification	J	K	U	V
M	M4 × L10	M4	M4-2L	46
Y	M4 × L10	M4	M4-2L	46
P	M3 × L10	M3	M3-2L	45

Stroke code	0100	0200	0300	0400	0500	0600	0700	0800	0900
Stroke length (mm)	100	200	300	400	500	600	700	800	900
L	336	436	536	636	736	836	936	1036	1136
A	12	52	27	92	82	72	62	52	27
B	72	62	52	102	92	82	72	62	52
G	190	290	390	490	590	690	790	890	990
M	2	2	3	3	4	5	6	7	8
N	1	2	3	3	4	5	6	7	8
P	120								
Y	3	3	4	4	5	6	7	8	9
Z	2	3	4	4	5	6	7	8	9
Weight (kg)	2.7	3.3	3.8	4.4	4.9	5.5	6	6.6	7.2

List of attachments

[Motor mounting parts]

Mounted motor specification	Pulley	Motor mounting plate fixing bolt	Motor mounting bolt	
			Size	Quantity
M	Included at shipment	Included at shipment	M4	4
Y			M4	4
P			M3	4

[Origin sensor, limit sensor]

Manufacturer	Model	Included quantity
OMRON Corporation	EE-SX674	3

*Refer to page 512 for sensor specifications.

Dimensions Motor left-side mounting

● EKS-05LL

Mounted motor specification	J	K	V	V
M	M4 × L10	M4	M4-2L	46
Y	M4 × L10	M4	M4-2L	46
P	M3 × L10	M3	M3-2L	45

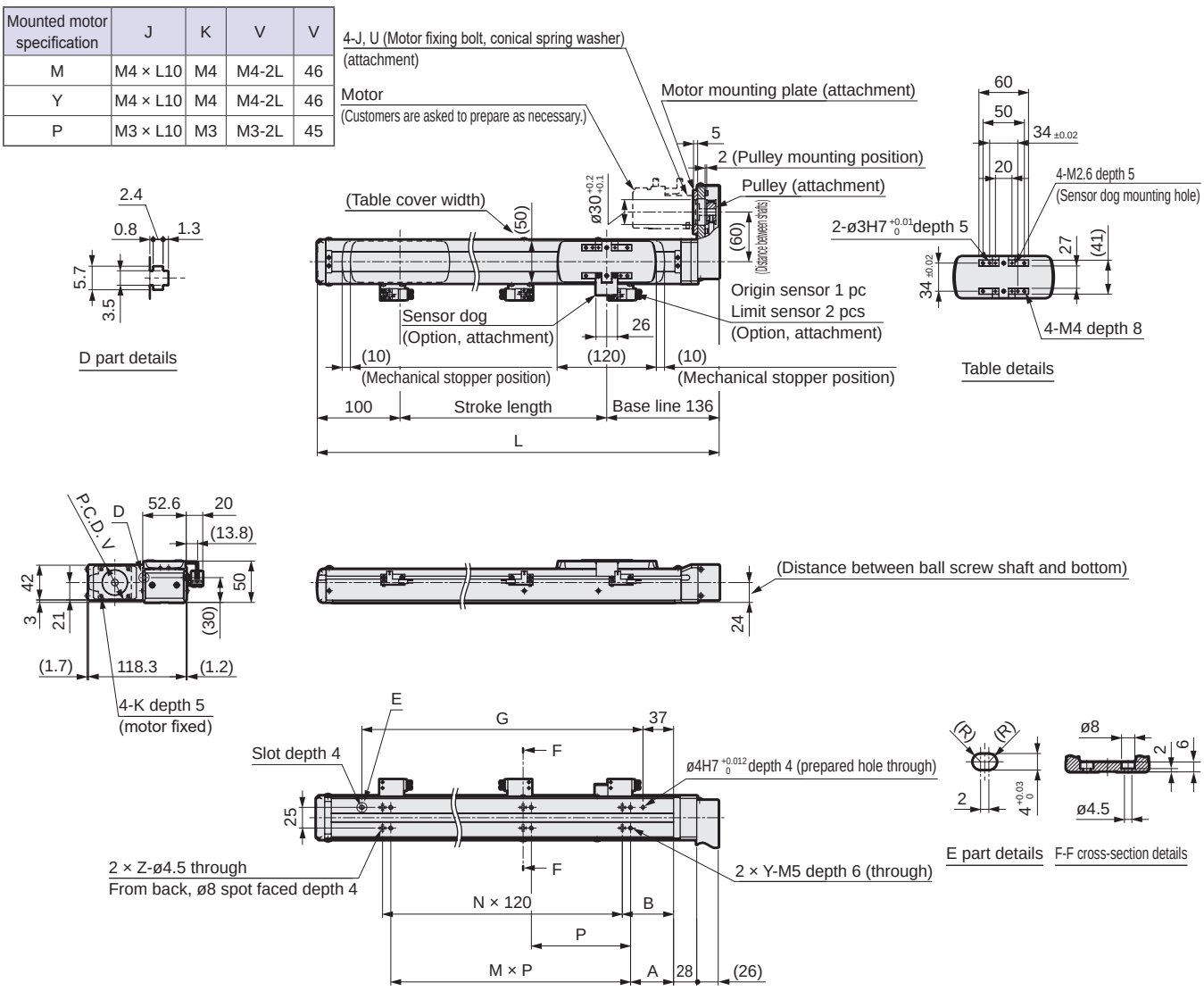

Stroke code	0100	0200	0300	0400	0500	0600	0700	0800	0900
Stroke length (mm)	100	200	300	400	500	600	700	800	900
L	336	436	536	636	736	836	936	1036	1136
A	12	52	27	92	82	72	62	52	27
B	72	62	52	102	92	82	72	62	52
G	190	290	390	490	590	690	790	890	990
M	2	2	3	3	4	5	6	7	8
N	1	2	3	3	4	5	6	7	8
P	120								
Y	3	3	4	4	5	6	7	8	9
Z	2	3	4	4	5	6	7	8	9
Weight (kg)	2.7	3.3	3.8	4.4	4.9	5.5	6	6.6	7.2

List of attachments

[Motor mounting parts]

Mounted motor specification	Pulley	Motor mounting plate fixing bolt	Motor mounting bolt	
			Size	Quantity
M	Included at shipment	Included at shipment	M4	4
Y			M4	4
P			M3	4

[Origin sensor, limit sensor]

Manufacturer	Model	Included quantity
OMRON Corporation	EE-SX674	3

*Refer to page 512 for sensor specifications.

Common options

Dimensions for straight motor mounting

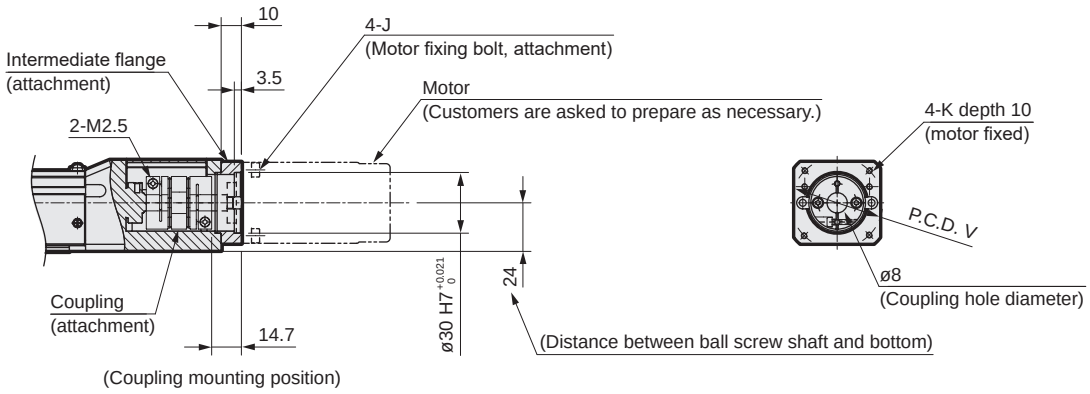

Motor mounting part details

Mounted motor specification	J	K	V
M	M4 × L10	M4	46
Y	M4 × L10	M4	46
P	M3 × L10	M3	45

For motor mounting on side/bottom

Motor shaft fixing method

Pulley (attachment)

Motor shaft fixing method: Flat	Motor shaft fixing method: Key
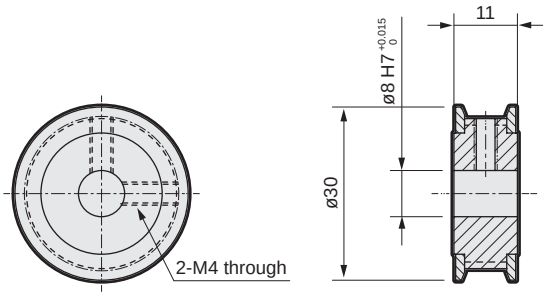	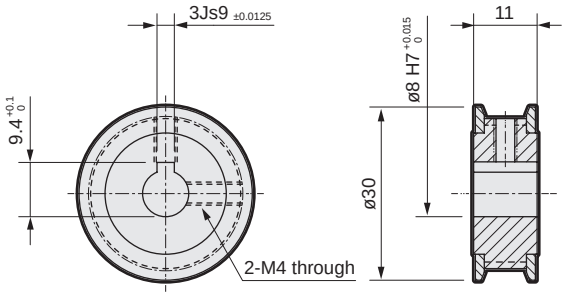

MEMO

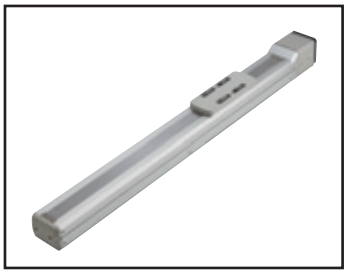

Electric actuator (motorless) Slider

EKS-06LE

Straight motor mounting

● Servo motor capacity: 200 W

How to order

EKS - 06 L E - 20 0300 N NN - M 2 N C B

(A) (B) (C) (D) (E) (F) (G) (H) (I) (J) (K)

(A) Body size

06	Body width 64 mm

(B) Motor

L	None

(C) Motor mounting direction

E	Straight mounting

(D) Screw lead

20	20 mm
30	30 mm

(E) Stroke length *1

0100 to 1300	100 mm (In 100 mm increments) 1300 mm

(F) Brake

N	None

(G) Mounted motor specification

M	Select the mounted motor specification from the table at right.
Y	
P	

(H) Motor capacity

2	200 W

(I) Motor shaft fixing method

N	For straight mounting

(J) Origin sensor *2

N	None
C	Yes

(K) Limit sensor *2

N	None
B	Yes

Manufacturer	200 W
Mitsubishi Electric Corporation	M
Delta Electronics Co., Ltd.	M
Sanyo Denki Co., Ltd.	M
YASKAWA Electric Corporation	Y
Keyence Corporation	Y
Panasonic Corporation	P
OMRON Corporation	P
Fuji Electric Co., Ltd.	M
Bosch Rexroth AG	P
Rockwell Automation, Inc.	M
SIEMENS AG	M

*Refer to page 461 for the motor model No.

*1: For the stroke length per 50 mm, contact CKD.
*2: Origin sensor and limit sensor are available as a set. As it is both-or-nothing, select "None" for both.

Specifications

Applicable motor capacity		200 W servo motor	
Drive method		Ball screw ø15	
Stroke length	mm	100 to 1300	
Screw lead	mm	20	30
Max. load capacity *1 *2	kg Horizontal	42	20.5
	Wall-mounted	20	18
	Vertical	12	7.5
Max. speed	mm/s	1000	1500
Rated thrust *2	N	180	120
Repeatability	mm	±0.01	
Lost motion	mm	0.1 or less	
Static allowable load	N	3250	
Static allowable moment	N·m	MP: 330, MY: 216, MR: 188	
Operating ambient temperature, humidity		0 to 40°C (no freezing) 20 to 80% RH (no condensation)	
Storage ambient temperature, humidity		0 to 40°C (no freezing) 20 to 80% RH (no condensation)	
Atmosphere		No corrosive gas, explosive gas, or dust	

*1: Values for max. load capacity are at acceleration/deceleration 0.5 G. Refer to page 510 for details.
*2: Rated thrust and max. load capacity are guideline values assuming that the motor mounted will output the rated torque.

Stroke and max. speed

(mm/s)

Stroke length / Screw lead	100 up 600	700	800	900	1000	1100	1200	1300
20	1000	980	770	630	520	430	370	320
30	1500	1480	1160	940	780	650	550	480

*The max. speed is the speed when the motor mounted by the customer can output a rotation speed of 3000 rpm.
The max. speed is restricted by the stroke. Do not move at speeds beyond the limit.

Allowable overhang length

*Refer to page 504 for details.

Moment direction

MP MY MR

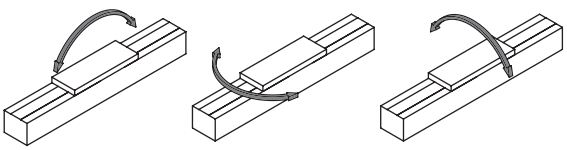

Dimensions Straight motor mounting

● EKS-06LE

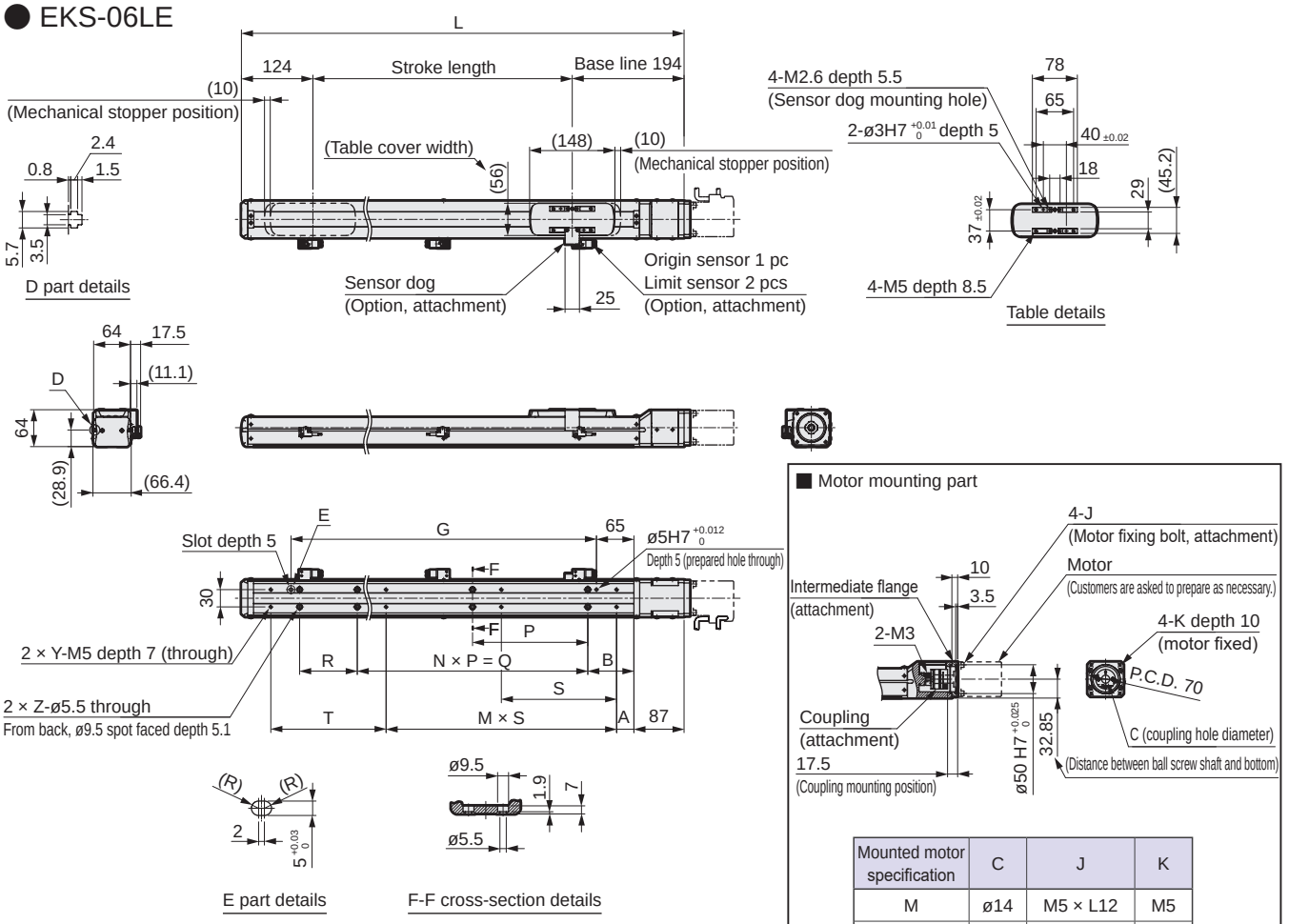

Mounted motor specification	C	J	K
M	ø14	M5 × L12	M5
Y	ø14	M5 × L12	M5
P	ø11	M4 × L12	M4

Stroke code	0100	0200	0300	0400	0500	0600	0700	0800	0900	1000	1100	1200	1300
Stroke length (mm)	100	200	300	400	500	600	700	800	900	1000	1100	1200	1300
L	418	518	618	718	818	918	1018	1118	1218	1318	1418	1518	1618
A	55	55	55	55	55	55	55	55	55	55	55	55	55
B	105	105	105	105	105	105	105	105	105	105	105	105	105
G	180	280	380	480	580	680	780	880	980	1080	1180	1280	1380
M	2	1	2	2	3	3	4	4	5	5	6	6	7
N	-	-	-	2	2	3	3	4	4	5	5	6	6
P	100	200											
Q	-	-	-	400	400	600	600	800	800	1000	1000	1200	1200
R	-	-	100	-	100	-	100	-	100	-	100	-	100
S	100	200											
T	-	100	-	100	-	100	-	100	-	100	-	100	-
Y	3	3	3	4	4	5	5	6	6	7	7	8	8
Z	2	2	3	3	4	4	5	5	6	6	7	7	8
Weight (kg)	4.3	5.1	5.8	6.6	7.4	8.2	8.9	9.7	10.5	11.3	12	12.8	13.6

List of attachments

[Motor mounting parts]

Mounted motor specification	Coupling	Intermediate flange fixing bolt	Motor mounting bolt	
			Size	Quantity
M	Included at shipment	Included at shipment	M5	4
Y			M5	4
P			M4	4

[Origin sensor, limit sensor]

Manufacturer	Model	Included quantity
OMRON Corporation	EE-SX674	3

*Refer to page 512 for sensor specifications.



Electric actuator (motorless) Slider

EKS-06L*

Motor side mounting (left, right, bottom)

● Servo motor capacity: 200 W

How to order

EKS - 06 L R - 20 0300 N NN - M 2 D C B

Ⓐ Body size

06	Body width 64 mm

Ⓑ Motor

L	None

Ⓒ Motor mounting direction

R	Right mounting
D	Bottom mounting
L	Left mounting

Ⓓ Screw lead

20	20 mm
30	30 mm

Ⓔ Stroke length *1

0100 to 1300	100 mm (In 100 mm increments) 1300 mm

Ⓕ Brake

N	None

Ⓖ Mounted motor specification

M	Select the mounted motor specification from the table at right.
Y	
P	

Ⓗ Motor capacity

2	200 W

Ⓘ Motor shaft fixing method

D	Flat
K	Key
M	Friction locking

Ⓙ Origin sensor *2

N	None
C	Yes

Ⓚ Limit sensor *2

N	None
B	Yes

Manufacturer	200 W
Mitsubishi Electric Corporation	M
Delta Electronics Co., Ltd.	M
Sanyo Denki Co., Ltd.	M
YASKAWA Electric Corporation	Y
Keyence Corporation	Y
Panasonic Corporation	P
OMRON Corporation	P
Fuji Electric Co., Ltd.	M
Bosch Rexroth AG	P
Rockwell Automation, Inc.	M
SIEMENS AG	M

*Refer to page 461 for the motor model No.

*1: For the stroke length per 50 mm, contact CKD.
*2: Origin sensor and limit sensor are available as a set. As it is both-or-nothing, select "None" for both.

Specifications

Applicable motor capacity		200 W servo motor	
Drive method		Ball screw ø15	
Stroke length	mm	100 to 1300	
Screw lead	mm	20	30
Max. load capacity *1 *2	kg Horizontal	41	19
	Wall-mounted	20	18
	Vertical	10.5	6.5
Max. speed	mm/s	1000	1500
Rated thrust *2	N	180	120
Repeatability	mm	±0.01	
Lost motion	mm	0.1 or less	
Static allowable load	N	3250	
Static allowable moment	N·m	MP: 330, MY: 216, MR: 188	
Operating ambient temperature, humidity		0 to 40°C (no freezing) 20 to 80% RH (no condensation)	
Storage ambient temperature, humidity		0 to 40°C (no freezing) 20 to 80% RH (no condensation)	
Atmosphere		No corrosive gas, explosive gas, or dust	

*1: Values for max. load capacity are at acceleration/deceleration 0.5 G. Refer to page 510 for details.
*2: Rated thrust and max. load capacity are guideline values assuming that the motor mounted will output the rated torque.

Stroke and max. speed

(mm/s)

Screw lead \ Stroke length	100 to 600	700	800	900	1000	1100	1200	1300
20	1000	980	770	630	520	430	370	320
30	1500	1480	1160	940	780	650	550	480

*The max. speed is the speed when the motor mounted by the customer can output a rotation speed of 3000 rpm.
The max. speed is restricted by the stroke. Do not move at speeds beyond the limit.

Allowable overhang length

*Refer to page 504 for details.

Moment direction

MP MY MR

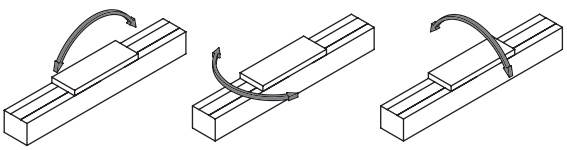

Dimensions Motor right-side mounting

● EKS-06LR

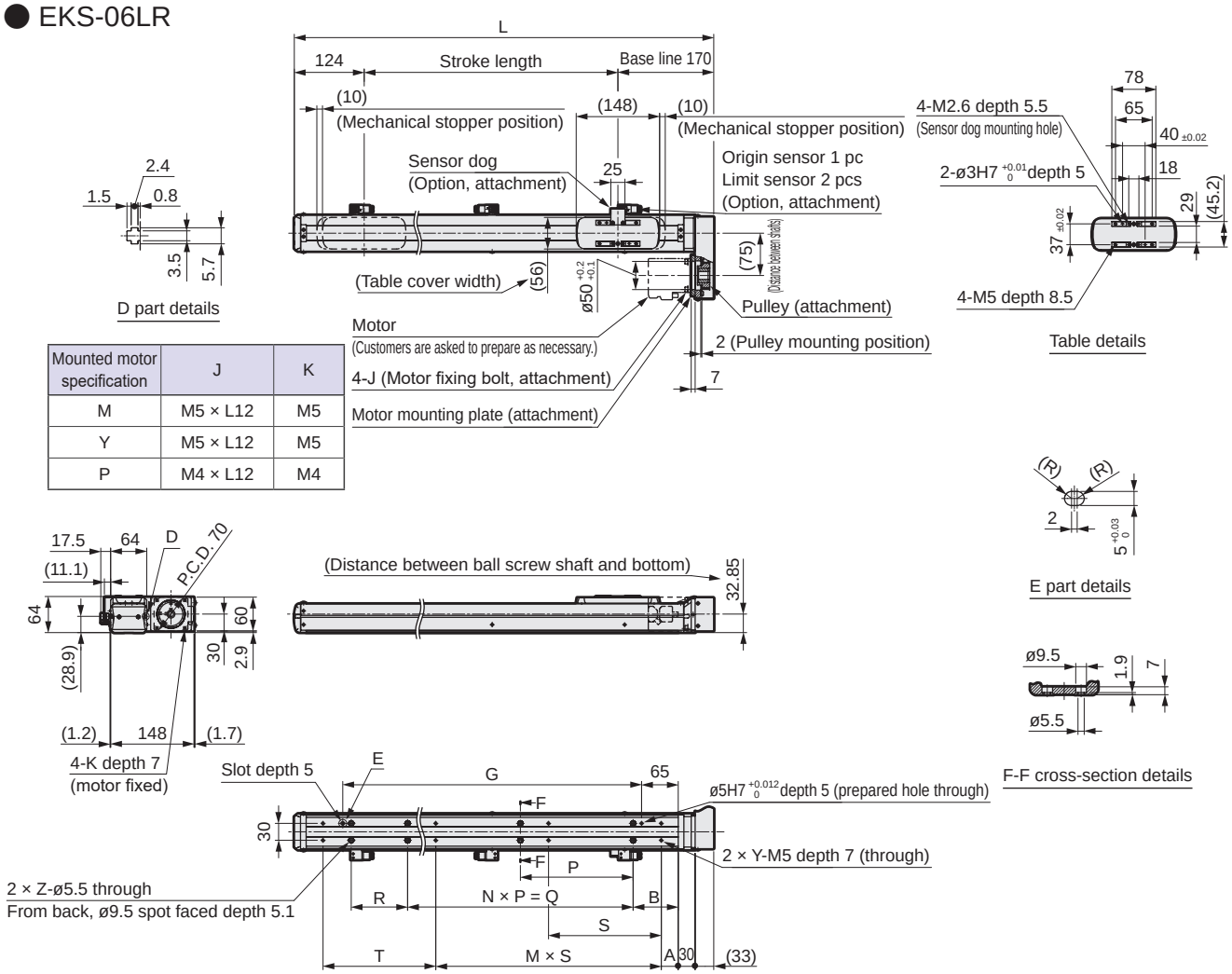

Mounted motor specification	J	K
M	M5 × L12	M5
Y	M5 × L12	M5
P	M4 × L12	M4

Stroke code	0100	0200	0300	0400	0500	0600	0700	0800	0900	1000	1100	1200	1300
Stroke length (mm)	100	200	300	400	500	600	700	800	900	1000	1100	1200	1300
L	394	494	594	694	794	894	994	1094	1194	1294	1394	1494	1594
A	55	55	55	55	55	55	55	55	55	55	55	55	55
B	105	105	105	105	105	105	105	105	105	105	105	105	105
G	180	280	380	480	580	680	780	880	980	1080	1180	1280	1380
M	2	1	2	2	3	3	4	4	5	5	6	6	7
N	-	-	-	2	2	3	3	4	4	5	5	6	6
P	100	200											
Q	-	-	-	400	400	600	600	800	800	1000	1000	1200	1200
R	-	-	100	-	100	-	100	-	100	-	100	-	100
S	100	200											
T	-	100	-	100	-	100	-	100	-	100	-	100	-
Y	3	3	3	4	4	5	5	6	6	7	7	8	8
Z	2	2	3	3	4	4	5	5	6	6	7	7	8
Weight (kg)	4.9	5.6	6.4	7.2	8	8.7	9.5	10.3	11.1	11.8	12.6	13.4	14.2

List of attachments

[Motor mounting parts]

Mounted motor specification	Pulley	Motor mounting plate fixing bolt	Motor mounting bolt	
			Size	Quantity
M	Included at shipment	Included at shipment	M5	4
Y			M5	4
P			M4	4

[Origin sensor, limit sensor]

Manufacturer	Model	Included quantity
OMRON Corporation	EE-SX674	3

*Refer to page 512 for sensor specifications.

Dimensions Motor bottom mounting

● EKS-06LD

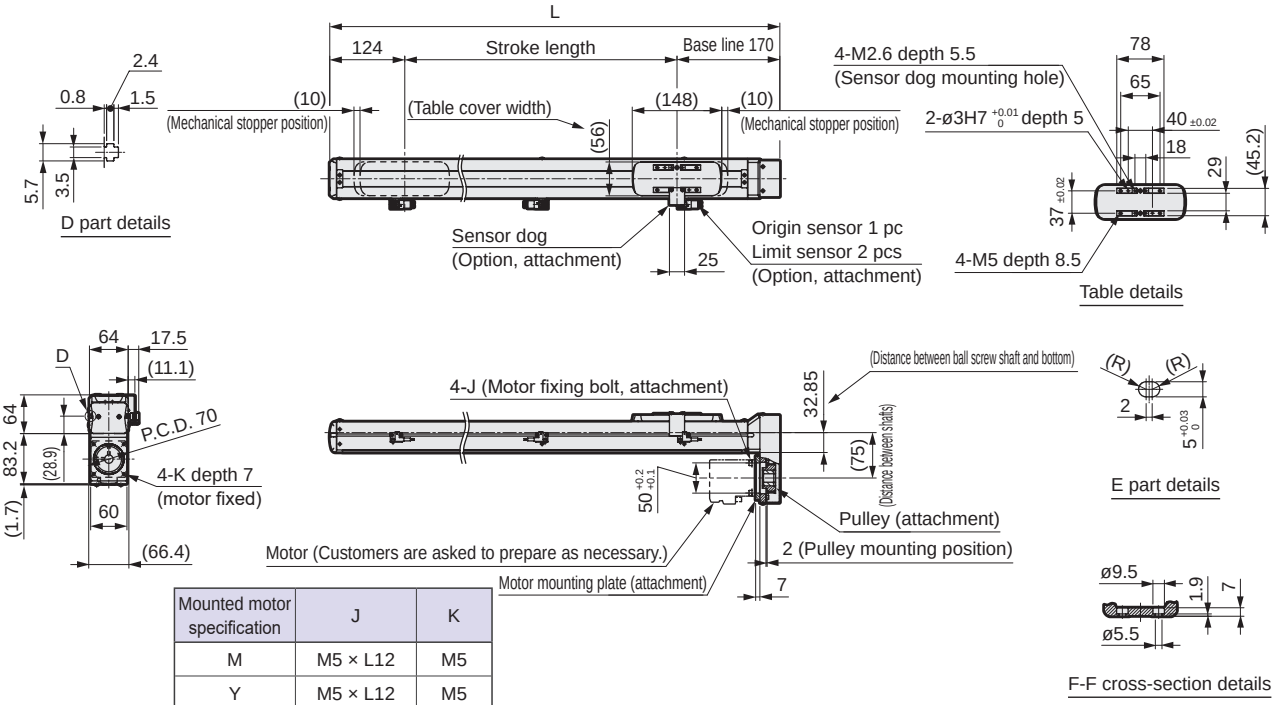

Mounted motor specification	J	K
M	M5 × L12	M5
Y	M5 × L12	M5
P	M4 × L12	M4

Stroke code	0100	0200	0300	0400	0500	0600	0700	0800	0900	1000	1100	1200	1300
Stroke length (mm)	100	200	300	400	500	600	700	800	900	1000	1100	1200	1300
L	394	494	594	694	794	894	994	1094	1194	1294	1394	1494	1594
A	55	55	55	55	55	55	55	55	55	55	55	55	55
B	105	105	105	105	105	105	105	105	105	105	105	105	105
G	180	280	380	480	580	680	780	880	980	1080	1180	1280	1380
M	2	1	2	2	3	3	4	4	5	5	6	6	7
N	-	-	-	2	2	3	3	4	4	5	5	6	6
P	100	200											
Q	-	-	-	400	400	600	600	800	800	1000	1000	1200	1200
R	-	-	100	-	100	-	100	-	100	-	100	-	100
S	100	200											
T	-	100	-	100	-	100	-	100	-	100	-	100	-
Y	3	3	3	4	4	5	5	6	6	7	7	8	8
Z	2	2	3	3	4	4	5	5	6	6	7	7	8
Weight (kg)	4.9	5.6	6.4	7.2	8	8.7	9.5	10.3	11.1	11.8	12.6	13.4	14.2

List of attachments

[Motor mounting parts]

Mounted motor specification	Pulley	Motor mounting plate fixing bolt	Motor mounting bolt	
			Size	Quantity
M	Included at shipment	Included at shipment	M5	4
Y			M5	4
P			M4	4

[Origin sensor, limit sensor]

Manufacturer	Model	Included quantity
OMRON Corporation	EE-SX674	3

*Refer to page 512 for sensor specifications.

Dimensions Motor left-side mounting

● EKS-06LL

Mounted motor specification	J	K
M	M5 × L12	M5
Y	M5 × L12	M5
P	M4 × L12	M4

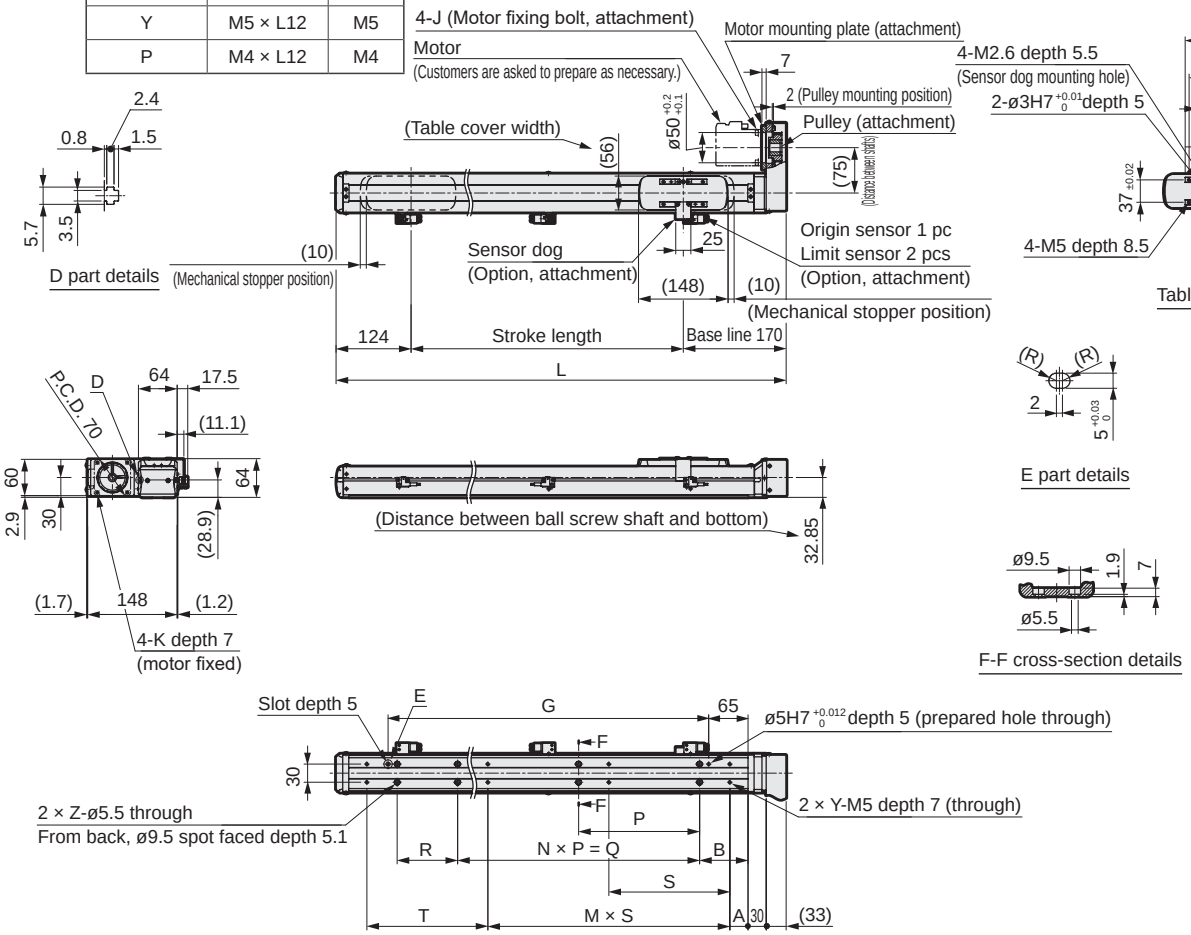

Stroke code	0100	0200	0300	0400	0500	0600	0700	0800	0900	1000	1100	1200	1300
Stroke length (mm)	100	200	300	400	500	600	700	800	900	1000	1100	1200	1300
L	394	494	594	694	794	894	994	1094	1194	1294	1394	1494	1594
A	55	55	55	55	55	55	55	55	55	55	55	55	55
B	105	105	105	105	105	105	105	105	105	105	105	105	105
G	180	280	380	480	580	680	780	880	980	1080	1180	1280	1380
M	2	1	2	2	3	3	4	4	5	5	6	6	7
N	-	-	-	2	2	3	3	4	4	5	5	6	6
P	100	200											
Q	-	-	-	400	400	600	600	800	800	1000	1000	1200	1200
R	-	-	100	-	100	-	100	-	100	-	100	-	100
S	100	200											
T	-	100	-	100	-	100	-	100	-	100	-	100	-
Y	3	3	3	4	4	5	5	6	6	7	7	8	8
Z	2	2	3	3	4	4	5	5	6	6	7	7	8
Weight (kg)	4.9	5.6	6.4	7.2	8	8.7	9.5	10.3	11.1	11.8	12.6	13.4	14.2

List of attachments

[Motor mounting parts]

Mounted motor specification	Pulley	Motor mounting plate fixing bolt	Motor mounting bolt	
			Size	Quantity
M	Included at shipment	Included at shipment	M5	4
Y			M5	4
P			M4	4

[Origin sensor, limit sensor]

Manufacturer	Model	Included quantity
OMRON Corporation	EE-SX674	3

*Refer to page 512 for sensor specifications.

Common options

Dimensions for straight motor mounting

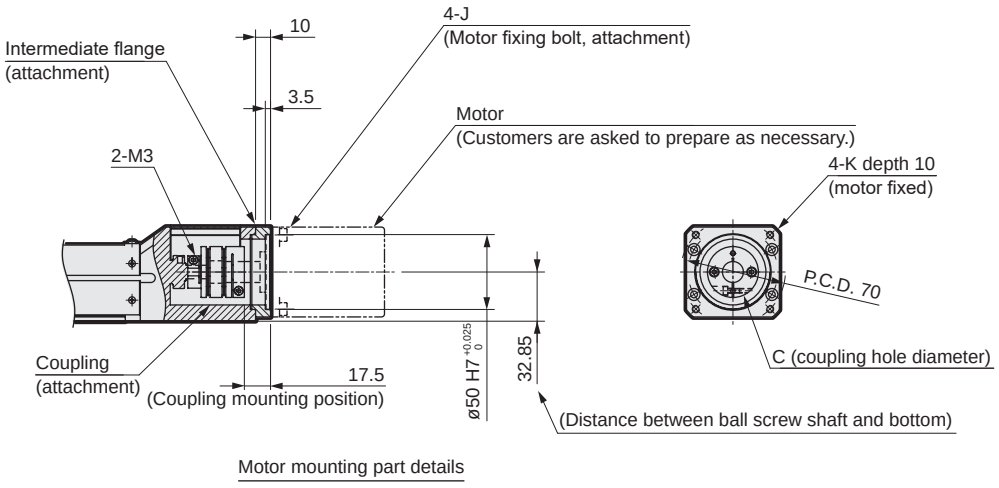

Motor mounting part details

Mounted motor specification	C	J	K
M	ø14	M5 × L12	M5
Y	ø14	M5 × L12	M5
P	ø11	M4 × L12	M4

For motor mounting on side/bottom

Motor shaft fixing method

Pulley (attachment)

Mounted motor specification: M, Y
Motor shaft fixing method: Key

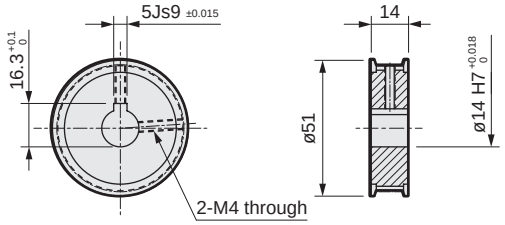

Mounted motor specification: P
Motor shaft fixing method: Key

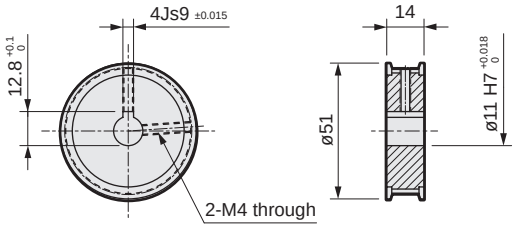

Motor shaft fixing method: Flat

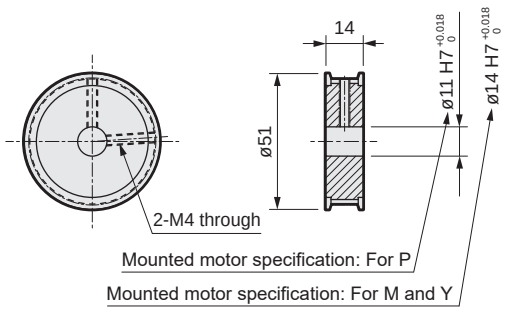

Mounted motor specification: M, Y
Motor shaft fixing method: Friction locking

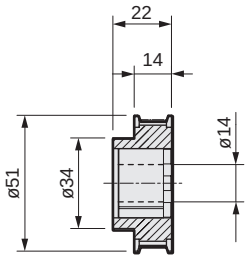

Mounted motor specification: P
Motor shaft fixing method: Friction locking

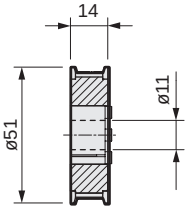

MEMO



Electric actuator (motorless) Slider

EKS-08LE

Straight motor mounting

● Servo motor capacity: 400 W

How to order

EKS - 08 (A) L (B) E (C) - 20 (D) 0300 (E) N (F) NN - M (G) 4 (H) N (I) C (J) B (K)

(A) Body size

08	Body width 84 mm

(B) Motor

L	None

(C) Motor mounting direction

E	Straight mounting

(D) Screw lead

20	20 mm
40	40 mm

(E) Stroke length

0100 to 1500	100 mm (In 100 mm increments) 1500 mm

(F) Brake

N	None

(G) Mounted motor specification

M	Select the mounted motor specification from the table at right.
Y	
P	

(H) Motor capacity

4	400 W

(I) Motor shaft fixing method

N	For straight mounting

(J) Origin sensor *1

N	None
C	Yes

(K) Limit sensor *1

N	None
B	Yes

*1: Origin sensor and limit sensor are available as a set. As it is both-or-nothing, select "None" for both.

Manufacturer	400 W
Mitsubishi Electric Corporation	M
Delta Electronics Co., Ltd.	M
Sanyo Denki Co., Ltd.	M
YASKAWA Electric Corporation	Y
Keyence Corporation	Y
Panasonic Corporation	P
OMRON Corporation	P
Fuji Electric Co., Ltd.	M
Bosch Rexroth AG	P
Rockwell Automation, Inc.	M
SIEMENS AG	M

*Refer to page 461 for the motor model No.

Specifications

Applicable motor capacity		400 W servo motor	
Drive method		Ball screw ø20	
Stroke length	mm	100 to 1500	
Screw lead	mm	20	40
Max. load capacity *1 *2	kg Horizontal	83.5	19
	kg Wall-mounted	45	19
	kg Vertical	23.5	10.5
Max. speed	mm/s	1000	2000
Rated thrust *2	N	359	179
Repeatability	mm	±0.01	
Lost motion	mm	0.1 or less	
Static allowable load	N	4000	
Static allowable moment	N·m	MP: 730, MY: 437, MR: 387	
Operating ambient temperature, humidity		0 to 40°C (no freezing) 20 to 80% RH (no condensation)	
Storage ambient temperature, humidity		0 to 40°C (no freezing) 20 to 80% RH (no condensation)	
Atmosphere		No corrosive gas, explosive gas, or dust	

*1: Values for max. load capacity are at acceleration/deceleration 0.5 G. Refer to page 510 for details.

*2: Rated thrust and max. load capacity are guideline values assuming that the motor mounted will output the rated torque.

Stroke and max. speed

(mm/s)

Screw lead \ Stroke length	100 to 700	800	900	1000	1100	1200	1300	1400	1500
20	1000	980	800	670	560	480	420	360	320
40	2000	1970	1610	1340	1130	970	840	730	650

*The max. speed is the speed when the motor mounted by the customer can output a rotation speed of 3000 rpm.
The max. speed is restricted by the stroke. Do not move at speeds beyond the limit.

Allowable overhang length

*Refer to page 504 for details.

Moment direction

MP MY MR

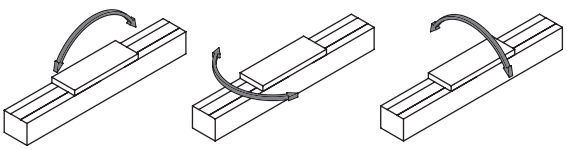

Dimensions Straight motor mounting

● EKS-08LE

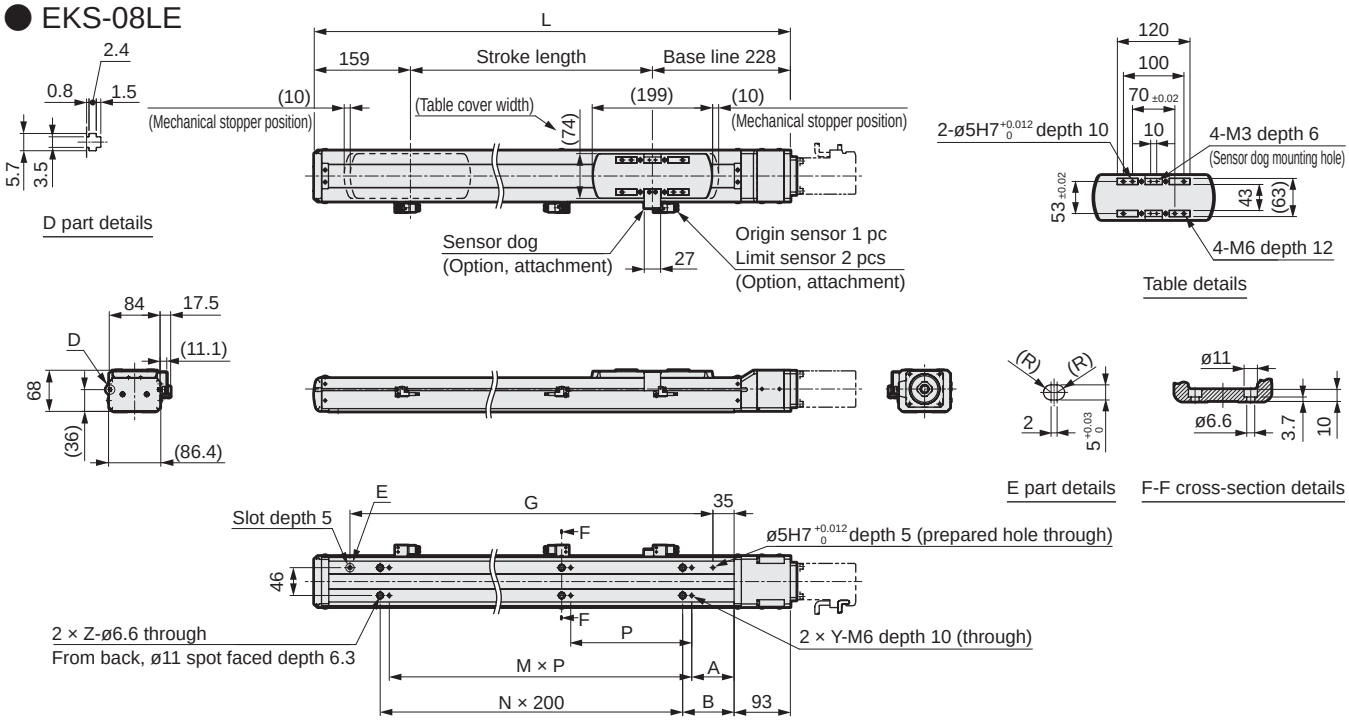

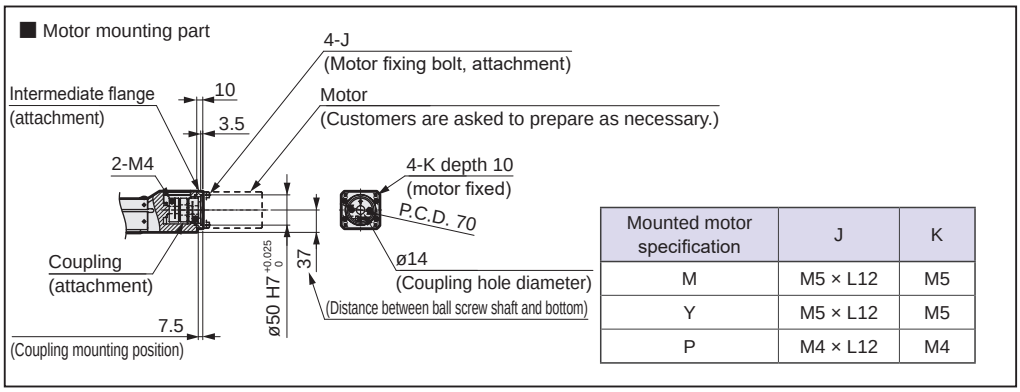

Mounted motor specification	J	K
M	M5 × L12	M5
Y	M5 × L12	M5
P	M4 × L12	M4

Stroke code	0100	0200	0300	0400	0500	0600	0700	0800	0900	1000	1100	1200	1300	1400	1500
Stroke length (mm)	100	200	300	400	500	600	700	800	900	1000	1100	1200	1300	1400	1500
L	487	587	687	787	887	987	1087	1187	1287	1387	1487	1587	1687	1787	1887
A	65	25	70	120	70	120	70	120	70	120	70	120	70	120	70
B	85	135	85	135	85	135	85	135	85	135	85	135	85	135	85
G	300	400	500	600	700	800	900	1000	1100	1200	1300	1400	1500	1600	1700
M	2	2	2	2	3	3	4	4	5	5	6	6	7	7	8
N	1	1	2	2	3	3	4	4	5	5	6	6	7	7	8
P	120	200													
Y	3	3	3	3	4	4	5	5	6	6	7	7	8	8	9
Z	2	2	3	3	4	4	5	5	6	6	7	7	8	8	9
Weight (kg)	8.1	9.4	10.7	12	13.3	14.6	15.9	17.2	18.5	19.8	21.1	22.4	23.7	25	26.3

List of attachments

[Motor mounting parts]

Mounted motor specification	Coupling	Intermediate flange fixing bolt	Motor mounting bolt	
			Size	Quantity
M	Included at shipment	Included at shipment	M5	4
Y			M5	4
P			M4	4

[Origin sensor, limit sensor]

Manufacturer	Model	Included quantity
OMRON Corporation	EE-SX674	3

*Refer to page 512 for sensor specifications.



Electric actuator (motorless) Slider

EKS-08L*

Motor side mounting (left, right, bottom)

● Servo motor capacity: 400 W

How to order

EKS - 08 L R - 20 0300 N NN - M 4 M C B

(A) (B) (C) (D) (E) (F) (G) (H) (I) (J) (K)

(A) Body size

08	Body width 84 mm

(B) Motor

L	None

(C) Motor mounting direction

R	Right mounting
D	Bottom mounting
L	Left mounting

(D) Screw lead

20	20 mm
40	40 mm

(E) Stroke length

0100 to 1500	100 mm (In 100 mm increments) 1500 mm

(F) Brake

N	None

(G) Mounted motor specification

M	Select the mounted motor specification from the table at right.
Y	
P	

(H) Motor capacity

4	400 W

(I) Motor shaft fixing method

M	Friction locking

(J) Origin sensor *1

N	None
C	Yes

(K) Limit sensor *1

N	None
B	Yes

Manufacturer	400 W
Mitsubishi Electric Corporation	M
Delta Electronics Co., Ltd.	M
Sanyo Denki Co., Ltd.	M
YASKAWA Electric Corporation	Y
Keyence Corporation	Y
Panasonic Corporation	P
OMRON Corporation	P
Fuji Electric Co., Ltd.	M
Bosch Rexroth AG	P
Rockwell Automation, Inc.	M
SIEMENS AG	M

*Refer to page 461 for the motor model No.

*1 Origin sensor and limit sensor are available as a set. As it is both-or-nothing, select "None" for both.

Specifications

Applicable motor capacity		400 W servo motor	
Drive method		Ball screw ø20	
Stroke length	mm	100 to 1500	
Screw lead	mm	20	40
Max. load capacity *1 *2	Horizontal kg	79.5	18
	Wall-mounted kg	45	18
	Vertical kg	20.5	9
Max. speed	mm/s	1000	2000
Rated thrust *2	N	359	179
Repeatability	mm	±0.01	
Lost motion	mm	0.1 or less	
Static allowable load	N	4000	
Static allowable moment	N·m	MP: 730, MY: 437, MR: 387	
Operating ambient temperature, humidity		0 to 40°C (no freezing) 20 to 80% RH (no condensation)	
Storage ambient temperature, humidity		0 to 40°C (no freezing) 20 to 80% RH (no condensation)	
Atmosphere		No corrosive gas, explosive gas, or dust	

*1: Values for max. load capacity are at acceleration/deceleration 0.5 G. Refer to page 510 for details.

*2: Rated thrust and max. load capacity are guideline values assuming that the motor mounted will output the rated torque.

Stroke and max. speed

(mm/s)

Stroke length / Screw lead	100 to 700	800	900	1000	1100	1200	1300	1400	1500
20	1000	980	800	670	560	480	420	360	320
40	2000	1970	1610	1340	1130	970	840	730	650

*The max. speed is the speed when the motor mounted by the customer can output a rotation speed of 3000 rpm.
The max. speed is restricted by the stroke. Do not move at speeds beyond the limit.

Allowable overhang length

*Refer to page 504 for details.

Moment direction

MP MY MR

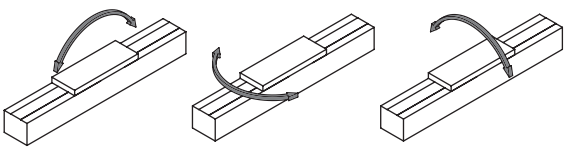

Dimensions Motor right-side mounting

● EKS-08LR

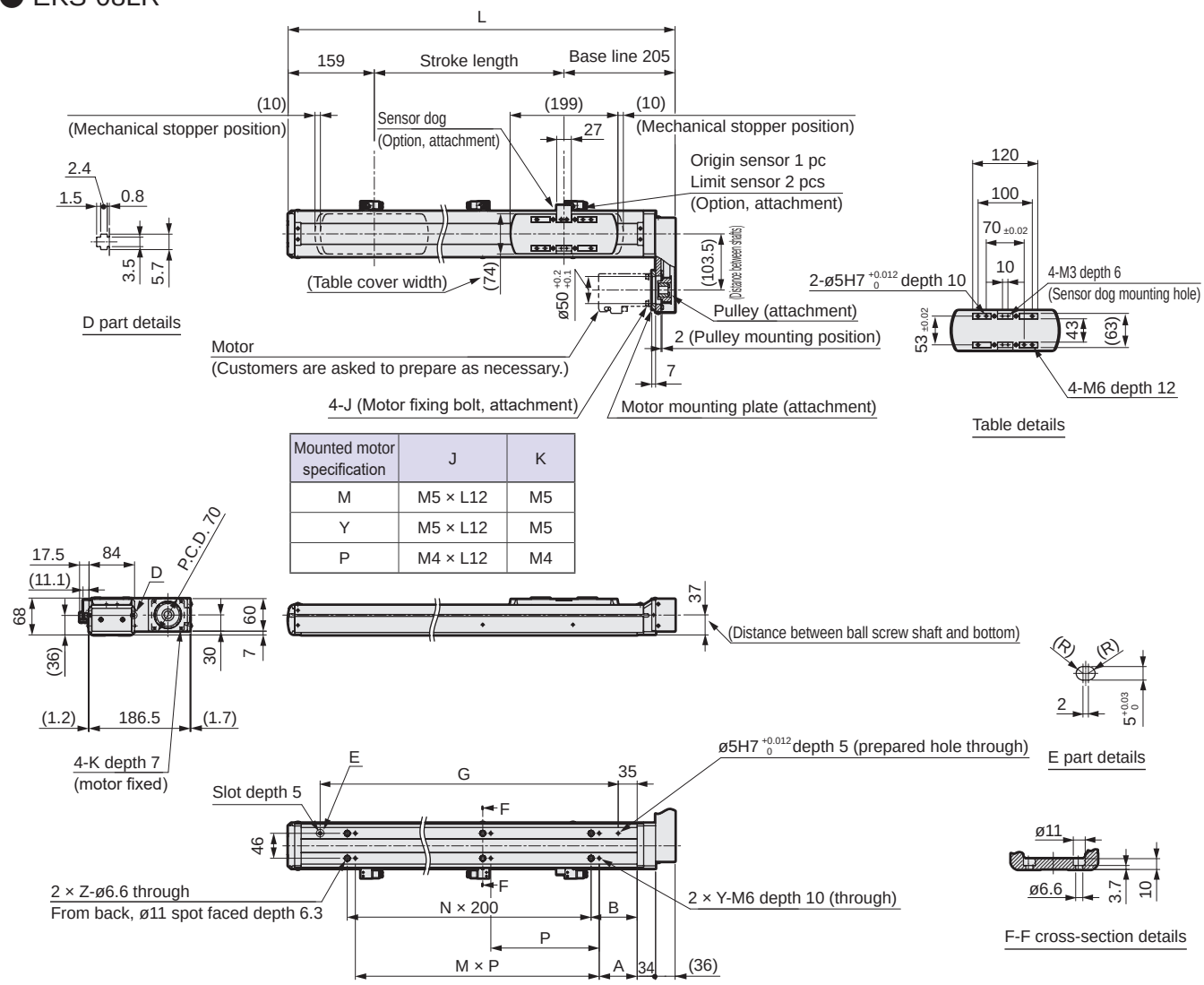

Mounted motor specification	J	K
M	M5 × L12	M5
Y	M5 × L12	M5
P	M4 × L12	M4

Stroke code	0100	0200	0300	0400	0500	0600	0700	0800	0900	1000	1100	1200	1300	1400	1500
Stroke length (mm)	100	200	300	400	500	600	700	800	900	1000	1100	1200	1300	1400	1500
L	464	564	664	764	864	964	1064	1164	1264	1364	1464	1564	1664	1764	1864
A	65	25	70	120	70	120	70	120	70	120	70	120	70	120	70
B	85	135	85	135	85	135	85	135	85	135	85	135	85	135	85
G	300	400	500	600	700	800	900	1000	1100	1200	1300	1400	1500	1600	1700
M	2	2	2	2	3	3	4	4	5	5	6	6	7	7	8
N	1	1	2	2	3	3	4	4	5	5	6	6	7	7	8
P	120	200													
Y	3	3	3	3	4	4	5	5	6	6	7	7	8	8	9
Z	2	2	3	3	4	4	5	5	6	6	7	7	8	8	9
Weight (kg)	8.7	10	11.3	12.6	13.9	15.2	16.5	17.8	19.1	20.4	21.7	23	24.3	25.6	26.9

List of attachments

[Motor mounting parts]

Mounted motor specification	Pulley	Motor mounting plate fixing bolt	Motor mounting bolt	
			Size	Quantity
M	Included at shipment	Included at shipment	M5	4
Y			M5	4
P			M4	4

[Origin sensor, limit sensor]

Manufacturer	Model	Included quantity
OMRON Corporation	EE-SX674	3

*Refer to page 512 for sensor specifications.

Dimensions Motor bottom mounting

● EKS-08LD

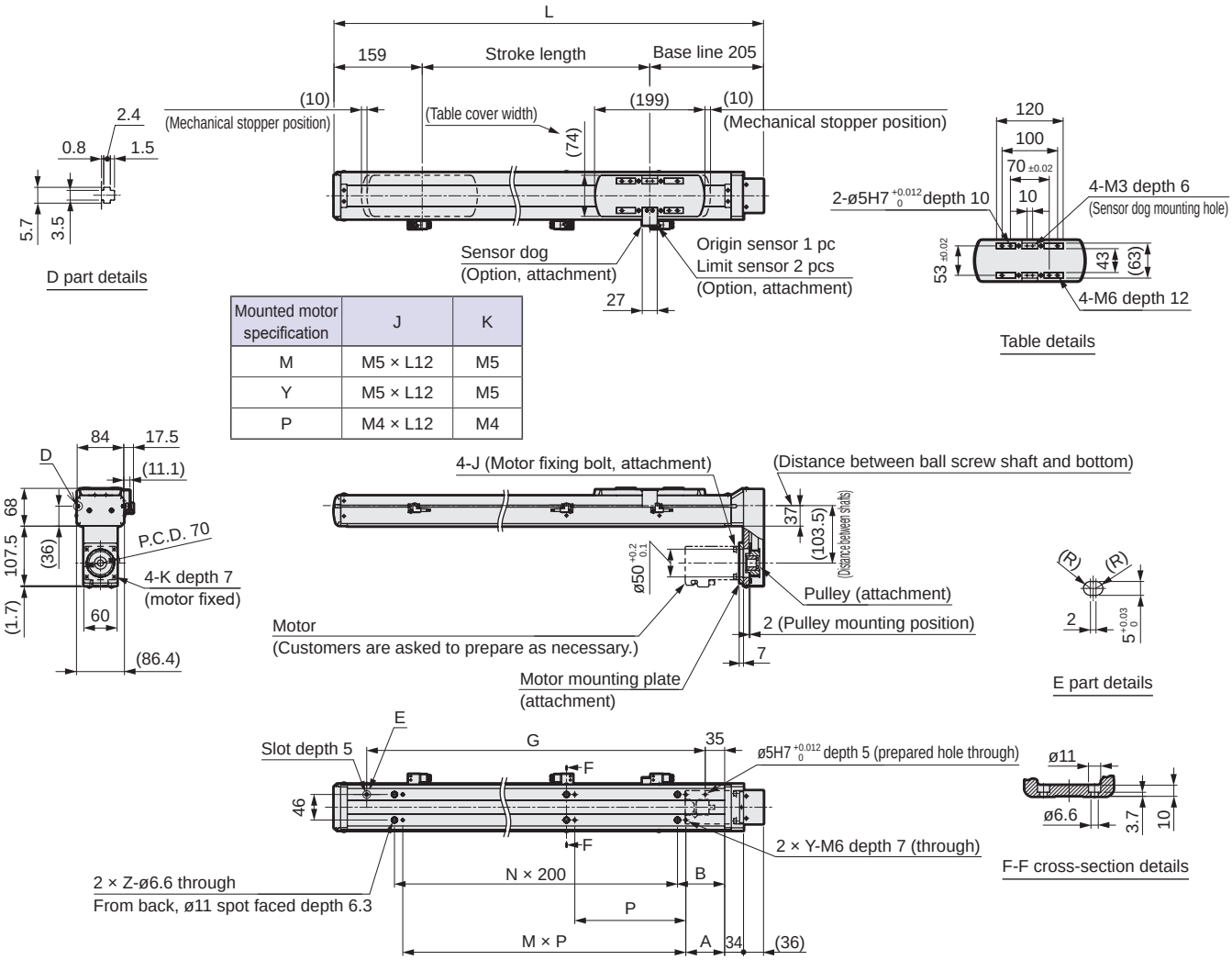

Mounted motor specification	J	K
M	M5 × L12	M5
Y	M5 × L12	M5
P	M4 × L12	M4

Stroke code	0100	0200	0300	0400	0500	0600	0700	0800	0900	1000	1100	1200	1300	1400	1500
Stroke length (mm)	100	200	300	400	500	600	700	800	900	1000	1100	1200	1300	1400	1500
L	464	564	664	764	864	964	1064	1164	1264	1364	1464	1564	1664	1764	1864
A	65	25	70	120	70	120	70	120	70	120	70	120	70	120	70
B	85	135	85	135	85	135	85	135	85	135	85	135	85	135	85
G	300	400	500	600	700	800	900	1000	1100	1200	1300	1400	1500	1600	1700
M	2	2	2	2	3	3	4	4	5	5	6	6	7	7	8
N	1	1	2	2	3	3	4	4	5	5	6	6	7	7	8
P	120	200													
Y	3	3	3	3	4	4	5	5	6	6	7	7	8	8	9
Z	2	2	3	3	4	4	5	5	6	6	7	7	8	8	9
Weight (kg)	8.7	10	11.3	12.6	13.9	15.2	16.5	17.8	19.1	20.4	21.7	23	24.3	25.6	26.9

List of attachments

[Motor mounting parts]

Mounted motor specification	Pulley	Motor mounting plate fixing bolt	Motor mounting bolt	
			Size	Quantity
M	Included at shipment	Included at shipment	M5	4
Y			M5	4
P			M4	4

[Origin sensor, limit sensor]

Manufacturer	Model	Included quantity
OMRON Corporation	EE-SX674	3

*Refer to page 512 for sensor specifications.

Dimensions Motor left-side mounting

● EKS-08LL

Mounted motor specification	J	K
M	M5 × L12	M5
Y	M5 × L12	M5
P	M4 × L12	M4

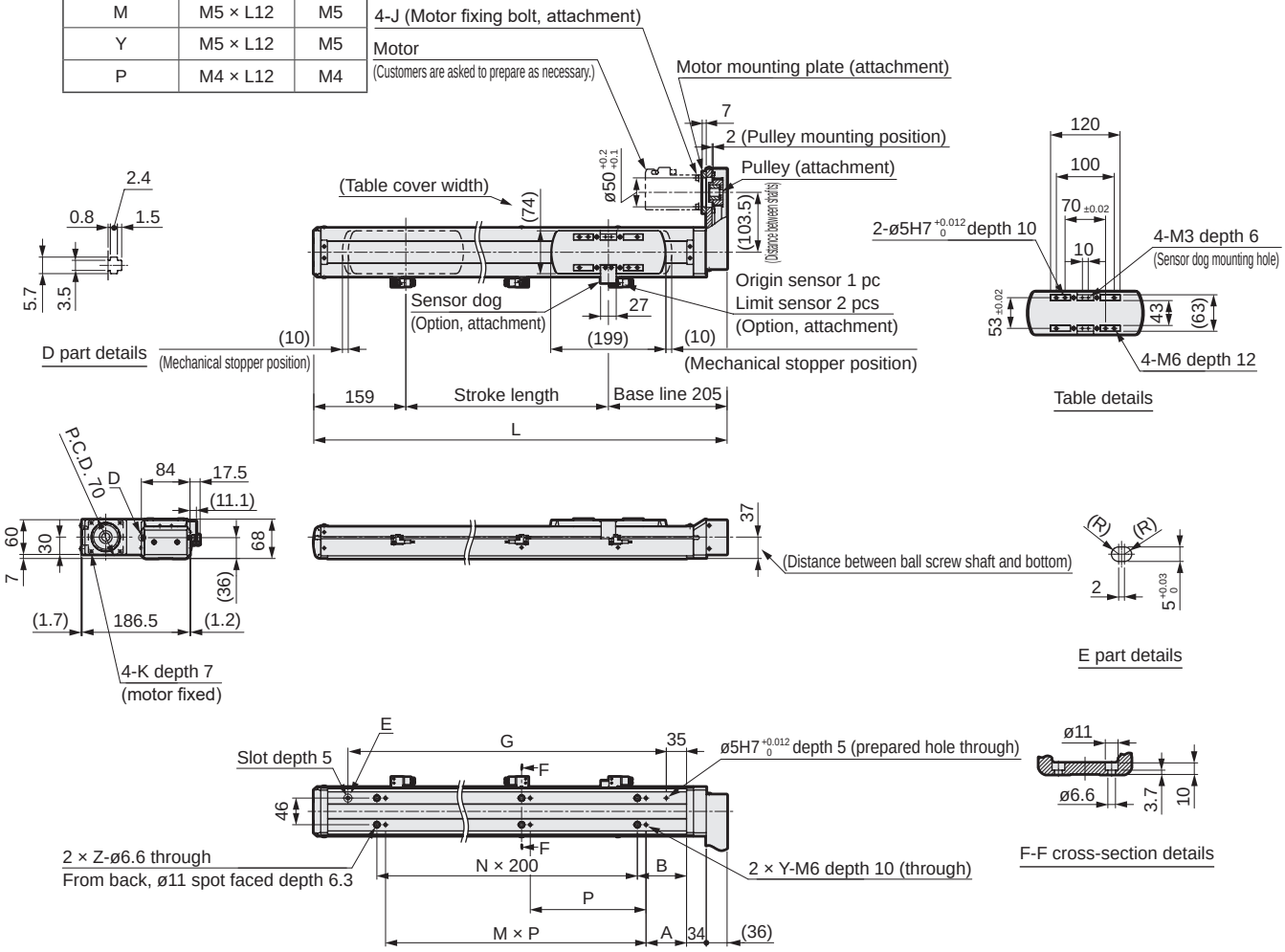

Stroke code	0100	0200	0300	0400	0500	0600	0700	0800	0900	1000	1100	1200	1300	1400	1500
Stroke length (mm)	100	200	300	400	500	600	700	800	900	1000	1100	1200	1300	1400	1500
L	464	564	664	764	864	964	1064	1164	1264	1364	1464	1564	1664	1764	1864
A	65	25	70	120	70	120	70	120	70	120	70	120	70	120	70
B	85	135	85	135	85	135	85	135	85	135	85	135	85	135	85
G	300	400	500	600	700	800	900	1000	1100	1200	1300	1400	1500	1600	1700
M	2	2	2	2	3	3	4	4	5	5	6	6	7	7	8
N	1	1	2	2	3	3	4	4	5	5	6	6	7	7	8
P	120	200													
Y	3	3	3	3	4	4	5	5	6	6	7	7	8	8	9
Z	2	2	3	3	4	4	5	5	6	6	7	7	8	8	9
Weight (kg)	8.7	10	11.3	12.6	13.9	15.2	16.5	17.8	19.1	20.4	21.7	23	24.3	25.6	26.9

List of attachments

[Motor mounting parts]

Mounted motor specification	Pulley	Motor mounting plate fixing bolt	Motor mounting bolt	
			Size	Quantity
M	Included at shipment	Included at shipment	M5	4
Y			M5	4
P			M4	4

[Origin sensor, limit sensor]

Manufacturer	Model	Included quantity
OMRON Corporation	EE-SX674	3

*Refer to page 512 for sensor specifications.

Common options

Dimensions for straight motor mounting

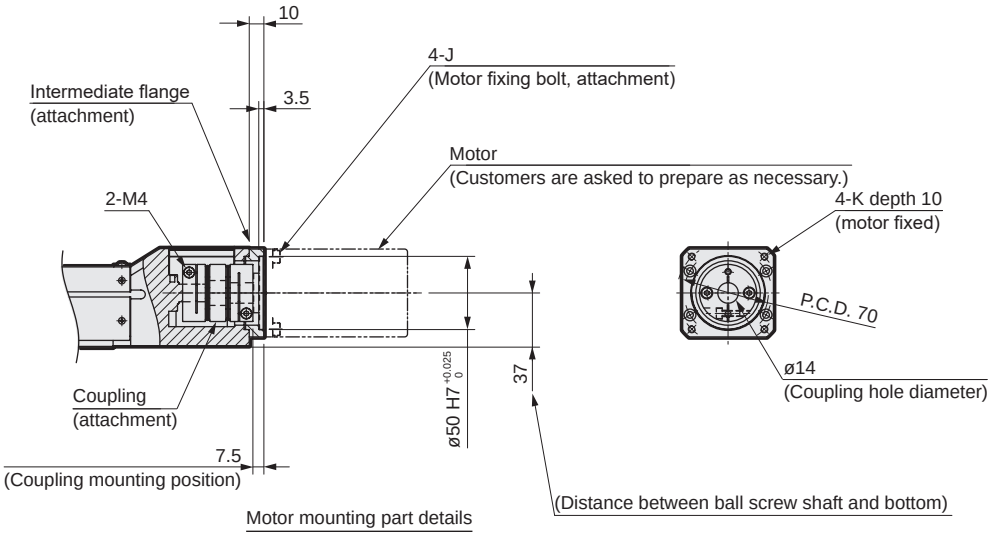

Mounted motor specification	J	K
M	M5 × L12	M5
Y	M5 × L12	M5
P	M4 × L12	M4

For motor mounting on side/bottom

Motor shaft fixing method

Pulley (attachment)

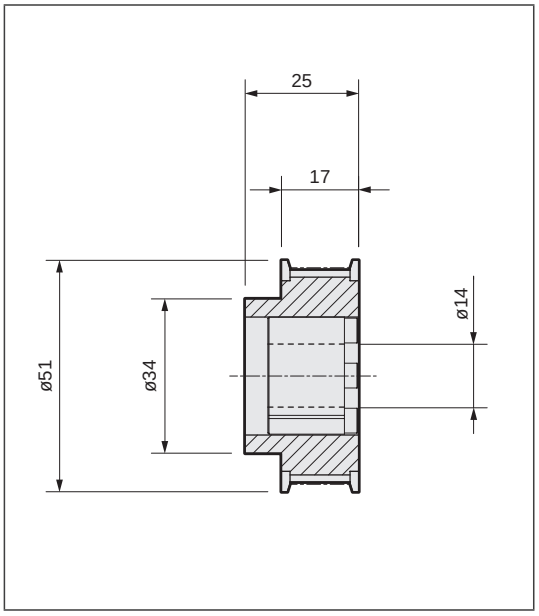

MEMO



Electric actuator (motorless) Slider

EKS-10LE

Straight motor mounting

● Servo motor capacity: 750 W

How to order

EKS - 10 (A) L (B) E (C) - 25 (D) 0300 (E) N (F) NN - M (G) 8 (H) N (I) C (J) B (K)

(A) Body size

10	Body width 104 mm

(B) Motor

L	None

(C) Motor mounting direction

E	Straight mounting

(D) Screw lead

25	25 mm
50	50 mm

(E) Stroke length

0100 to 1500	100 mm (In 100 mm increments) 1500 mm

(F) Brake

N	None

(G) Mounted motor specification

M	Select the mounted motor specification from the table at right.
Y	
P	

(H) Motor capacity

8	750 W

(I) Motor shaft fixing method

N	For straight mounting

(J) Origin sensor *1

N	None
C	Yes

(K) Limit sensor *1

N	None
B	Yes

Manufacturer	750 W
Mitsubishi Electric Corporation	M
Delta Electronics Co., Ltd.	M
YASKAWA Electric Corporation	Y
Keyence Corporation	Y
Panasonic Corporation	P
OMRON Corporation	P
Fuji Electric Co., Ltd.	M
Bosch Rexroth AG	P
Rockwell Automation, Inc.	M
SIEMENS AG	M

*Refer to page 461 for the motor model No.

*1 Origin sensor and limit sensor are available as a set. As it is both-or-nothing, select "None" for both.

Specifications

Applicable motor capacity		750 W servo motor	
Drive method		Ball screw ø25	
Stroke length	mm	100 to 1500	
Screw lead	mm	25	50
Max. load capacity *1 *2	kg Horizontal	118.5	40
	Wall-mounted	76	40
	Vertical	33.5	14.5
Max. speed	mm/s	1250	2500
Rated thrust *2	N	540	270
Repeatability	mm	±0.01	
Lost motion	mm	0.1 or less	
Static allowable load	N	5830	
Static allowable moment	N·m	MP: 1048, MY: 712, MR: 671	
Operating ambient temperature, humidity		0 to 40°C (no freezing) 20 to 80% RH (no condensation)	
Storage ambient temperature, humidity		0 to 40°C (no freezing) 20 to 80% RH (no condensation)	
Atmosphere		No corrosive gas, explosive gas, or dust	

*1: Values for max. load capacity are at acceleration/deceleration 0.5 G. Refer to page 510 for details.

*2: Rated thrust and max. load capacity are guideline values assuming that the motor mounted will output the rated torque.

Stroke and max. speed

(mm/s)

Screw lead \ Stroke length	100 to 900	1000	1100	1200	1300	1400	1500
25	1250	1050	890	760	660	580	510
50	2500	2110	1790	1530	1330	1160	1030

*The max. speed is the speed when the motor mounted by the customer can output a rotation speed of 3000 rpm.
The max. speed is restricted by the stroke. Do not move at speeds beyond the limit.

Allowable overhang length

*Refer to page 504 for details.

Moment direction

MP MY MR

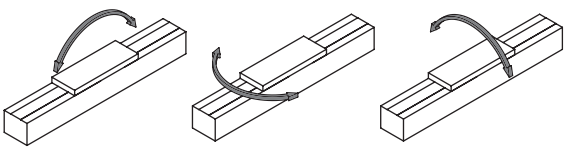

Dimensions Straight motor mounting

● EKS-10LE

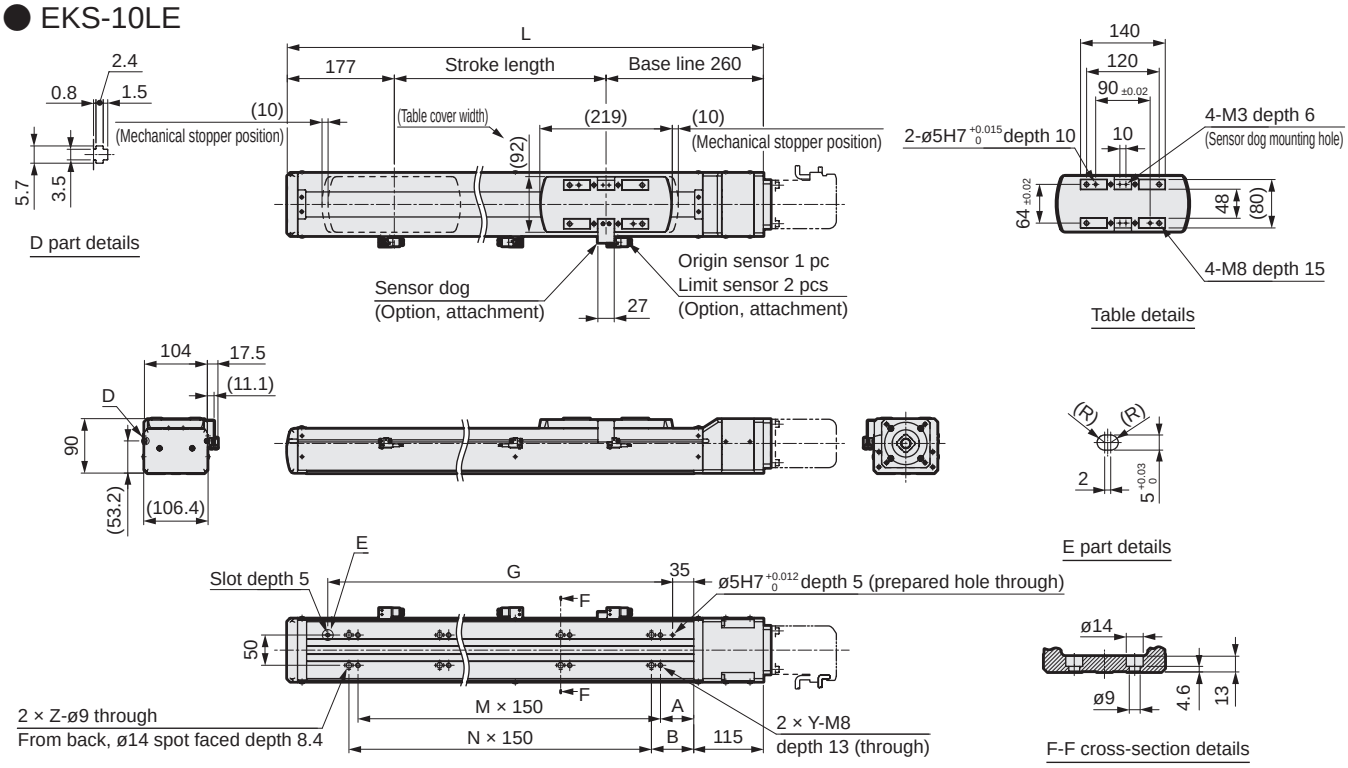

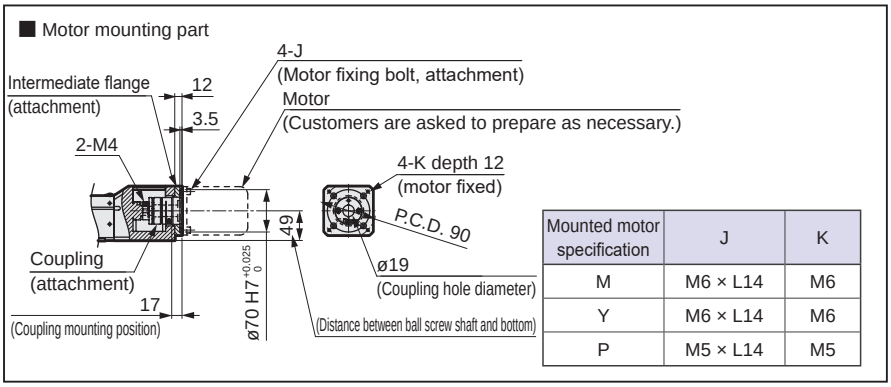

Mounted motor specification	J	K
M	M6 × L14	M6
Y	M6 × L14	M6
P	M5 × L14	M5

Stroke code	0100	0200	0300	0400	0500	0600	0700	0800	0900	1000	1100	1200	1300	1400	1500
Stroke length (mm)	100	200	300	400	500	600	700	800	900	1000	1100	1200	1300	1400	1500
L	537	637	737	837	937	1037	1137	1237	1337	1437	1537	1637	1737	1837	1937
A	45	80	55	105	80	55	105	80	55	105	80	55	105	80	55
B	120	95	70	120	95	70	120	95	70	120	95	70	120	95	70
G	320	420	520	620	720	820	920	1020	1120	1220	1320	1420	1520	1620	1720
M	2	2	3	3	4	5	5	6	7	7	8	9	9	10	11
N	1	2	3	3	4	5	5	6	7	7	8	9	9	10	11
Y	3	3	4	4	5	6	6	7	8	8	9	10	10	11	12
Z	2	3	4	4	5	6	6	7	8	8	9	10	10	11	12
Weight (kg)	14.7	16.8	18.8	20.9	22.9	25	27	29.1	31.2	33.2	35.3	37.3	39.4	41.5	43.5

List of attachments

[Motor mounting parts]

Mounted motor specification	Coupling	Intermediate flange fixing bolt	Motor mounting bolt	
			Size	Quantity
M	Included at shipment	Included at shipment	M6	4
Y			M6	4
P			M5	4

[Origin sensor, limit sensor]

Manufacturer	Model	Included quantity
OMRON Corporation	EE-SX674	3

*Refer to page 512 for sensor specifications.



Electric actuator (motorless) Slider

EKS-10L*

Motor side mounting (left, right, bottom)

● Servo motor capacity: 750 W

How to order

EKS - 10 (A) L (B) R (C) - 25 (D) 0300 (E) N (F) NN - M (G) 8 (H) M (I) C (J) B (K)

(A) Body size

10	Body width 104 mm

(B) Motor

L	None

(C) Motor mounting direction

R	Right mounting
D	Bottom mounting
L	Left mounting

(D) Screw lead

25	25 mm
50	50 mm

(E) Stroke length

0100 to 1500	100 mm (In 100 mm increments) 1500 mm

(F) Brake

N	None

(G) Mounted motor specification

M	Select the mounted motor specification from the table at right.
Y	
P	

(H) Motor capacity

8	750 W

(I) Motor shaft fixing method

M	Friction locking

(J) Origin sensor *1

N	None
C	Yes

(K) Limit sensor *1

N	None
B	Yes

Manufacturer	750 W
Mitsubishi Electric Corporation	M
Delta Electronics Co., Ltd.	M
YASKAWA Electric Corporation	Y
Keyence Corporation	Y
Panasonic Corporation	P
OMRON Corporation	P
Fuji Electric Co., Ltd.	M
Bosch Rexroth AG	P
Rockwell Automation, Inc.	M
SIEMENS AG	M

*Refer to page 461 for the motor model No.

*1 Origin sensor and limit sensor are available as a set. As it is both-or-nothing, select "None" for both.

Specifications

Applicable motor capacity		750 W servo motor	
Drive method		Ball screw ø25	
Stroke length	mm	100 to 1500	
Screw lead	mm	25	50
Max. load capacity *1 *2	kg Horizontal	92.5	37.5
	kg Wall-mounted	76	37.5
	kg Vertical	28	12.5
Max. speed	mm/s	1250	2500
Rated thrust *2	N	540	270
Repeatability	mm	±0.01	
Lost motion	mm	0.1 or less	
Static allowable load	N	5830	
Static allowable moment	N·m	MP: 1048, MY: 712, MR: 671	
Operating ambient temperature, humidity		0 to 40°C (no freezing) 20 to 80% RH (no condensation)	
Storage ambient temperature, humidity		0 to 40°C (no freezing) 20 to 80% RH (no condensation)	
Atmosphere		No corrosive gas, explosive gas, or dust	

*1: Values for max. load capacity are at acceleration/deceleration 0.5 G. Refer to page 510 for details.

*2: Rated thrust and max. load capacity are guideline values assuming that the motor mounted will output the rated torque.

Stroke and max. speed

(mm/s)

Screw lead \ Stroke length	100 to 900	1000	1100	1200	1300	1400	1500
25	1250	1050	890	760	660	580	510
50	2500	2110	1790	1530	1330	1160	1030

*The max. speed is the speed when the motor mounted by the customer can output a rotation speed of 3000 rpm.
The max. speed is restricted by the stroke. Do not move at speeds beyond the limit.

Allowable overhang length

*Refer to page 504 for details.

Moment direction

MP MY MR

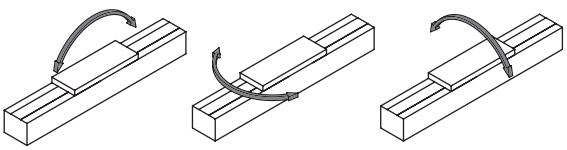

Dimensions Motor right-side mounting

● EKS-10LR

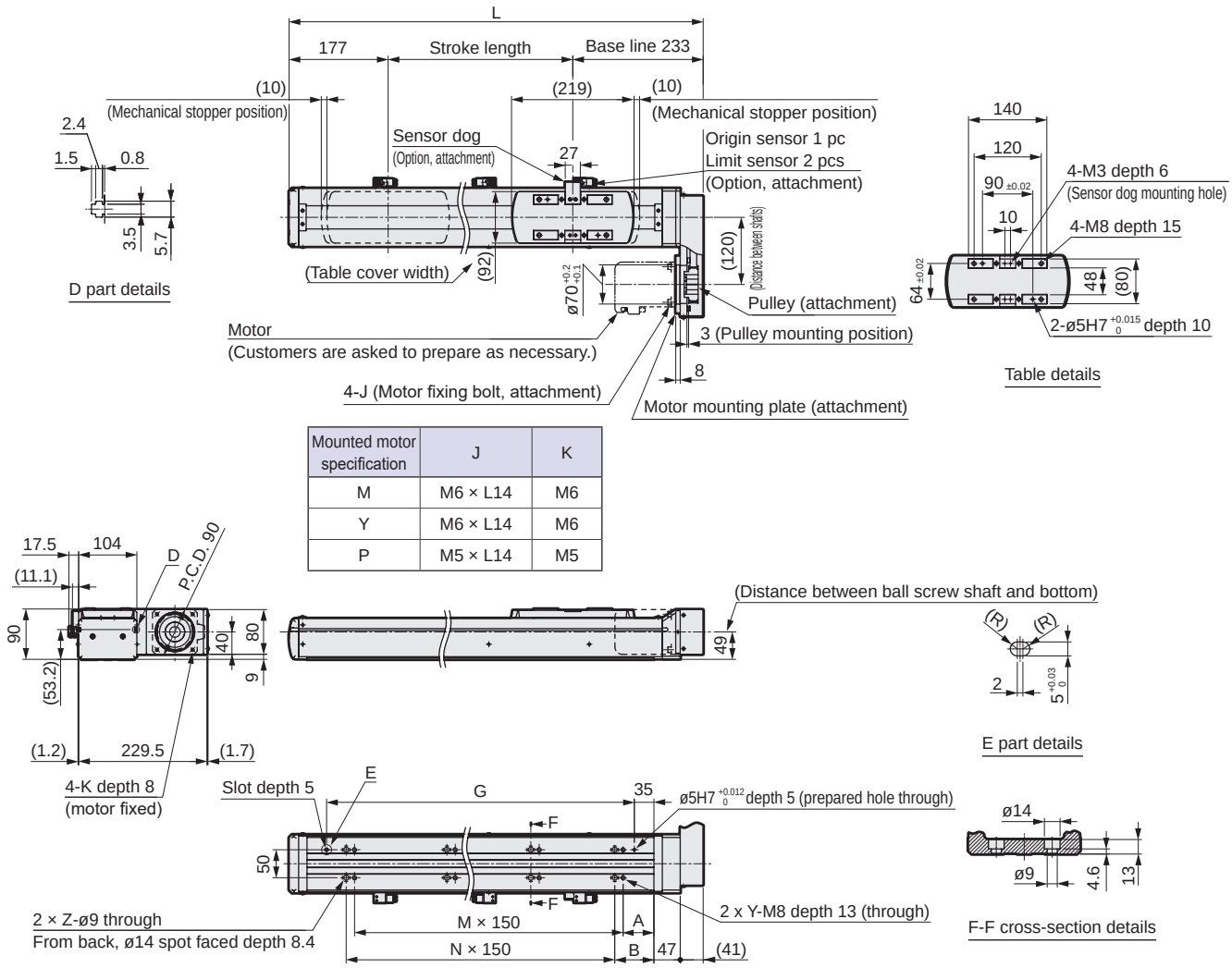

Mounted motor specification	J	K
M	M6 × L14	M6
Y	M6 × L14	M6
P	M5 × L14	M5

Stroke code	0100	0200	0300	0400	0500	0600	0700	0800	0900	1000	1100	1200	1300	1400	1500
Stroke length (mm)	100	200	300	400	500	600	700	800	900	1000	1100	1200	1300	1400	1500
L	510	610	710	810	910	1010	1110	1210	1310	1410	1510	1610	1710	1810	1910
A	45	80	55	105	80	55	105	80	55	105	80	55	105	80	55
B	120	95	70	120	95	70	120	95	70	120	95	70	120	95	70
G	320	420	520	620	720	820	920	1020	1120	1220	1320	1420	1520	1620	1720
M	2	2	3	3	4	5	5	6	7	7	8	9	9	10	11
N	1	2	3	3	4	5	5	6	7	7	8	9	9	10	11
Y	3	3	4	4	5	6	6	7	8	8	9	10	10	11	12
Z	2	3	4	4	5	6	6	7	8	8	9	10	10	11	12
Weight (kg)	15.6	17.7	19.8	21.8	23.9	25.9	28	30.1	32.1	34.2	36.2	38.3	40.4	42.4	44.5

List of attachments

[Motor mounting parts]

Mounted motor specification	Pulley	Motor mounting plate fixing bolt	Motor mounting bolt	
			Size	Quantity
M	Included at shipment	Included at shipment	M6	4
Y			M6	4
P			M5	4

[Origin sensor, limit sensor]

Manufacturer	Model	Included quantity
OMRON Corporation	EE-SX674	3

*Refer to page 512 for sensor specifications.

Dimensions Motor bottom mounting

● EKS-10LD

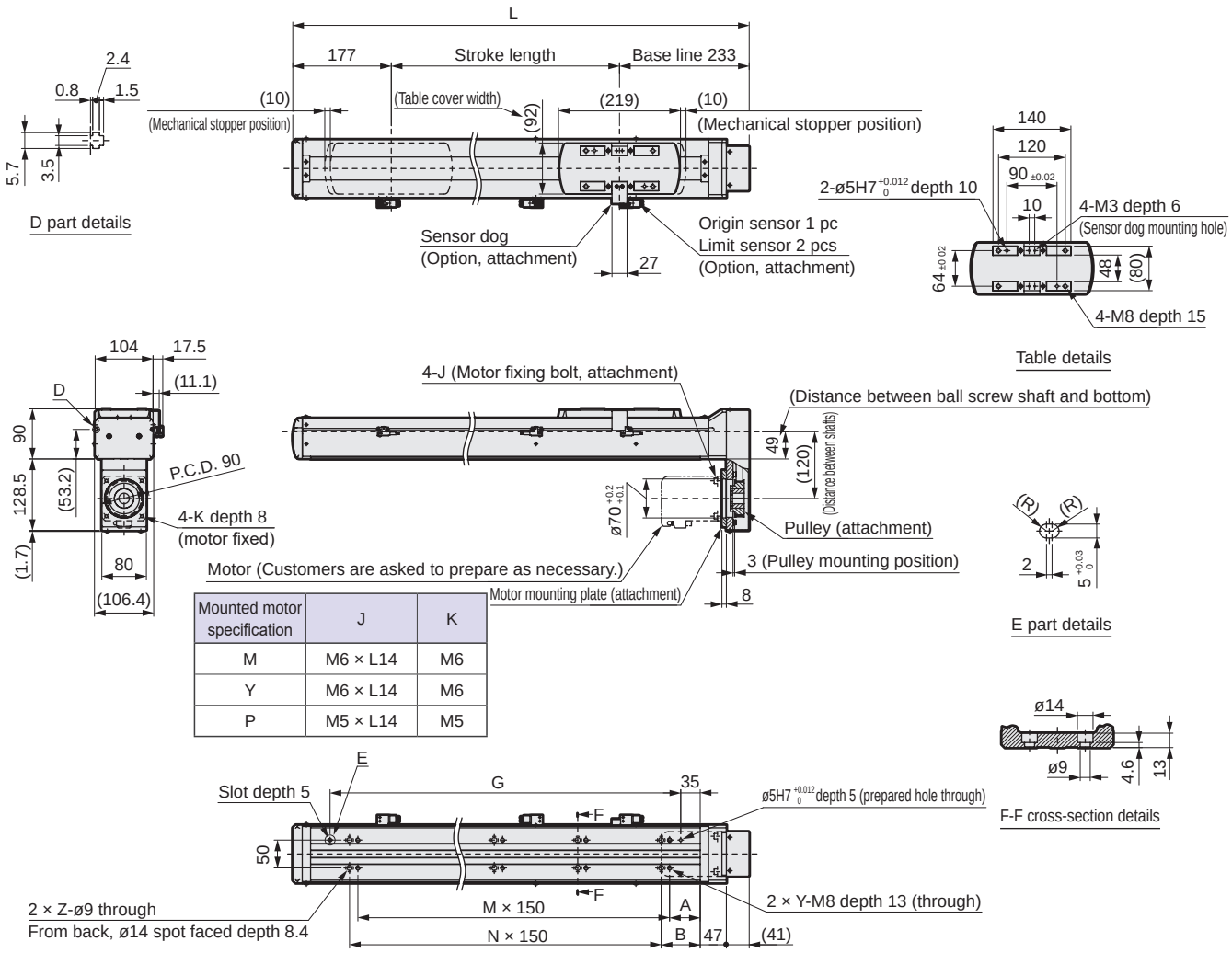

Mounted motor specification	J	K
M	M6 × L14	M6
Y	M6 × L14	M6
P	M5 × L14	M5

Stroke code	0100	0200	0300	0400	0500	0600	0700	0800	0900	1000	1100	1200	1300	1400	1500
Stroke length (mm)	100	200	300	400	500	600	700	800	900	1000	1100	1200	1300	1400	1500
L	510	610	710	810	910	1010	1110	1210	1310	1410	1510	1610	1710	1810	1910
A	45	80	55	105	80	55	105	80	55	105	80	55	105	80	55
B	120	95	70	120	95	70	120	95	70	120	95	70	120	95	70
G	320	420	520	620	720	820	920	1020	1120	1220	1320	1420	1520	1620	1720
M	2	2	3	3	4	5	5	6	7	7	8	9	9	10	11
N	1	2	3	3	4	5	5	6	7	7	8	9	9	10	11
Y	3	3	4	4	5	6	6	7	8	8	9	10	10	11	12
Z	2	3	4	4	5	6	6	7	8	8	9	10	10	11	12
Weight (kg)	15.6	17.7	19.8	21.8	23.9	25.9	28	30.1	32.1	34.2	36.2	38.3	40.4	42.4	44.5

List of attachments

[Motor mounting parts]

Mounted motor specification	Pulley	Motor mounting plate fixing bolt	Motor mounting bolt	
			Size	Quantity
M	Included at shipment	Included at shipment	M6	4
Y			M6	4
P			M5	4

[Origin sensor, limit sensor]

Manufacturer	Model	Included quantity
OMRON Corporation	EE-SX674	3

*Refer to page 512 for sensor specifications.

Dimensions Motor left-side mounting

● EKS-10LL

Mounted motor specification	J	K
M	M6 × L14	M6
Y	M6 × L14	M6
P	M5 × L14	M5

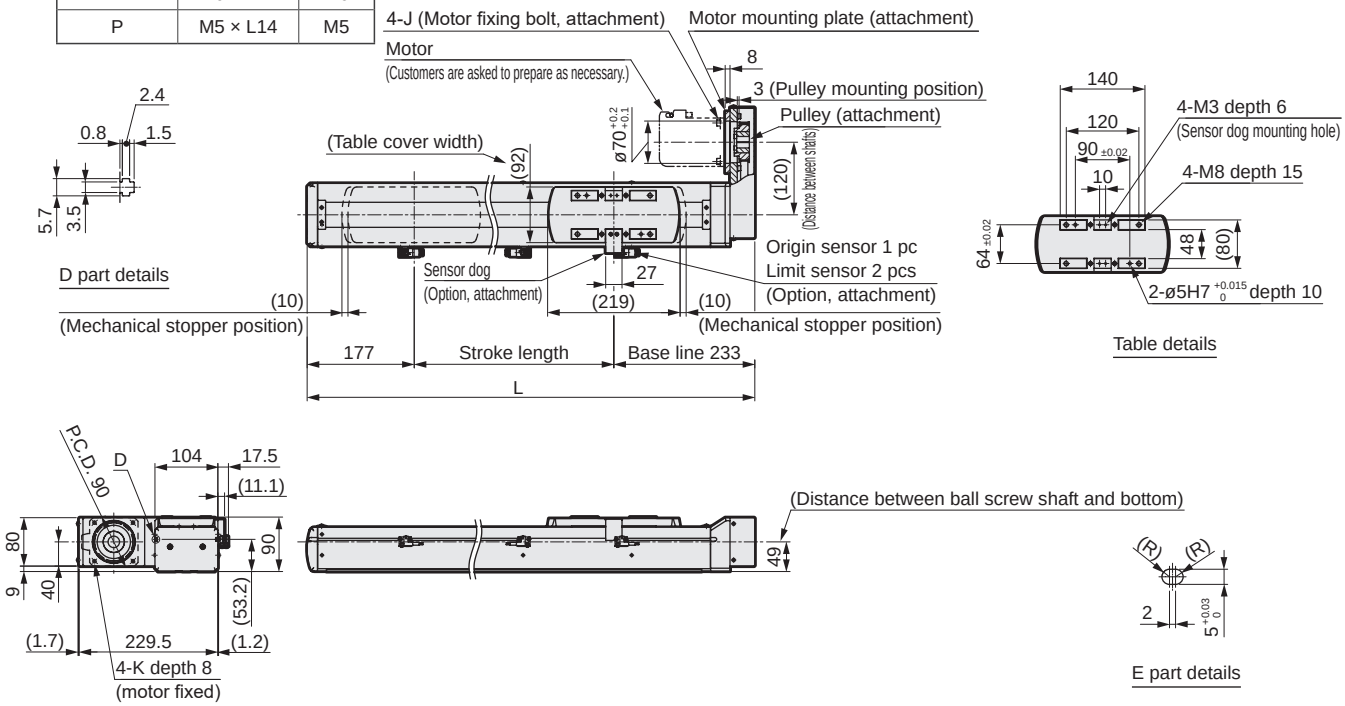

Stroke code	0100	0200	0300	0400	0500	0600	0700	0800	0900	1000	1100	1200	1300	1400	1500
Stroke length (mm)	100	200	300	400	500	600	700	800	900	1000	1100	1200	1300	1400	1500
L	510	610	710	810	910	1010	1110	1210	1310	1410	1510	1610	1710	1810	1910
A	45	80	55	105	80	55	105	80	55	105	80	55	105	80	55
B	120	95	70	120	95	70	120	95	70	120	95	70	120	95	70
G	320	420	520	620	720	820	920	1020	1120	1220	1320	1420	1520	1620	1720
M	2	2	3	3	4	5	5	6	7	7	8	9	9	10	11
N	1	2	3	3	4	5	5	6	7	7	8	9	9	10	11
Y	3	3	4	4	5	6	6	7	8	8	9	10	10	11	12
Z	2	3	4	4	5	6	6	7	8	8	9	10	10	11	12
Weight (kg)	15.6	17.7	19.8	21.8	23.9	25.9	28	30.1	32.1	34.2	36.2	38.3	40.4	42.4	44.5

List of attachments

[Motor mounting parts]

Mounted motor specification	Pulley	Motor mounting plate fixing bolt	Motor mounting bolt	
			Size	Quantity
M	Included at shipment	Included at shipment	M6	4
Y			M6	4
P			M5	4

[Origin sensor, limit sensor]

Manufacturer	Model	Included quantity
OMRON Corporation	EE-SX674	3

*Refer to page 512 for sensor specifications.

Common options

Dimensions for straight motor mounting

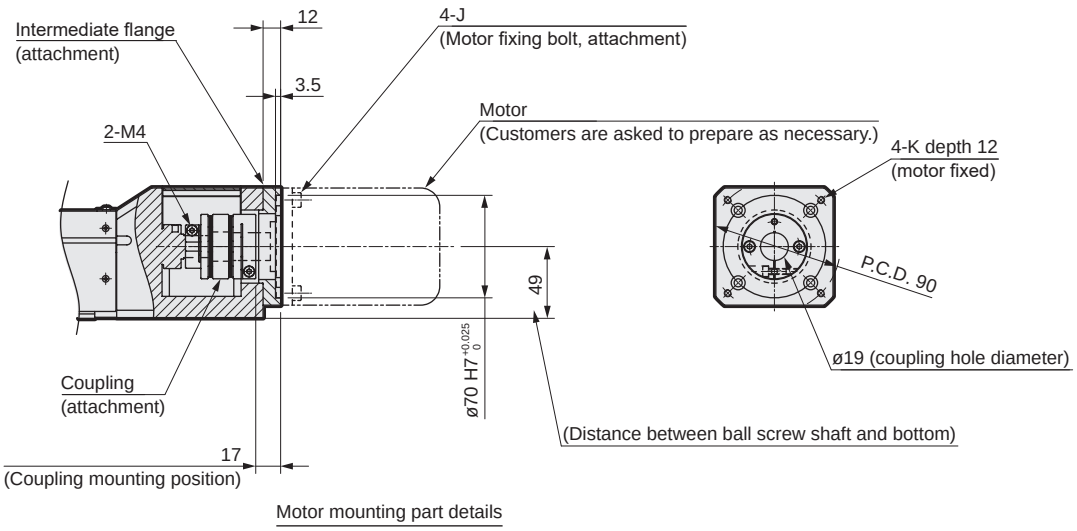

Motor mounting part details

Mounted motor specification	J	K
M	M6 × L14	M6
Y	M6 × L14	M6
P	M5 × L14	M5

For motor mounting on side/bottom

Motor shaft fixing method

Pulley (attachment)

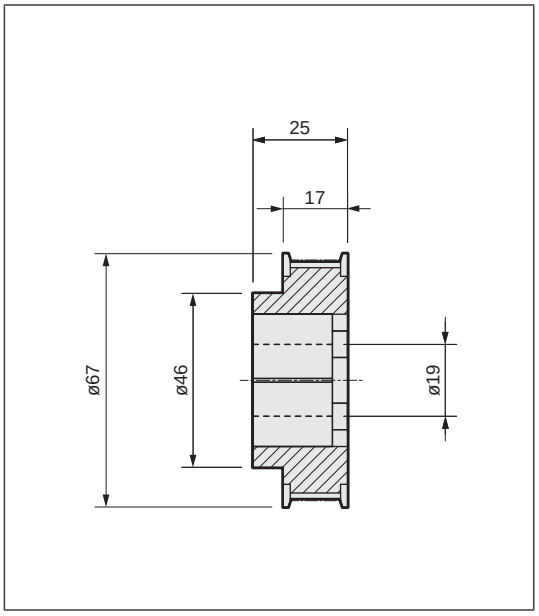

MEMO

Model selection

STEP 1 Confirming load capacity

Load capacity varies with mounting orientation and screw lead.
Refer to the Table of Load Capacity by Acceleration/deceleration (pages 510 and 511) to select the size and screw lead.

STEP 2 Confirming positioning time

Calculate the positioning time of the selected product according to the following example and confirm that the required tact is achievable.
Select the speed and acceleration/deceleration from the specification table for each model and the motor selected by the customer.

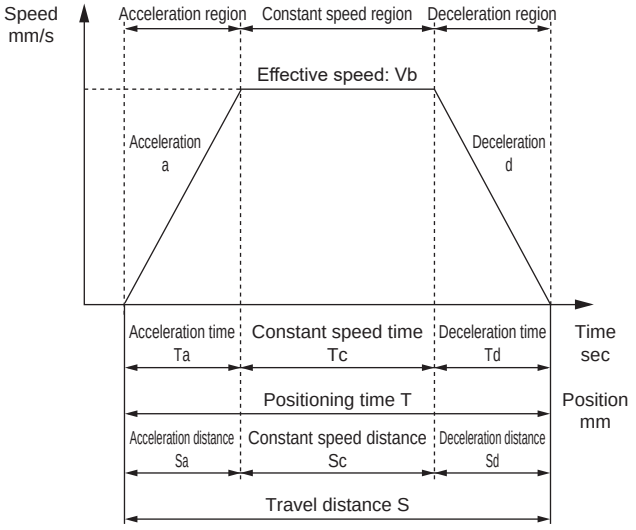

	Description	Code	Unit	Remarks
Set value	Set speed	V	mm/s	
	Set acceleration	a	mm/s^2	
	Set deceleration	d	mm/s^2	
	Travel distance	S	mm	
Calculated value	Achieved speed	Vmax	mm/s	$= \{2 \times a \times d \times S/(a + d)\}^{1/2}$
	Effective speed	Vb	mm/s	Smaller of V and Vmax
	Acceleration time	Ta	s	= Vb/a
	Deceleration time	Td	s	= Vb/d
	Constant speed time	Tc	s	= Sc/Vb
	Acceleration distance	Sa	mm	$= (a \times Ta^2)/2$
	Deceleration distance	Sd	mm	$= (d \times Td^2)/2$
	Constant speed distance	Sc	mm	= S - (Sa + Sd)
	Positioning time	T	s	= Ta + Tc + Td

*Do not use at speeds that exceed the specifications.
*Depending on acceleration/deceleration and stroke length, the trapezoid speed waveform may not be formed (the set speed may not be achieved). In this case, select the effective speed (Vb) from the set speed (V) and the achieved speed (Vmax), whichever is smaller.
*Use at acceleration/deceleration of 2 G or less.
*1 G ≈ 9.8 m/s^2.

STEP 3 Confirming allowable overhang length

Make sure that the load overhang length during operation is within the allowable range (pages 504 to 509).

Contact CKD for selection details.

MEMO

Allowable moment and overhang length by mounting orientation (EKS Series)

[When installed horizontally]

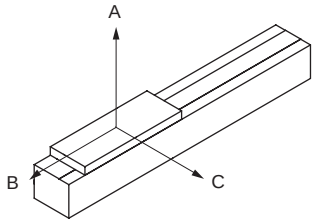

[Allowable overhang length]

● EKS-04

Motor mounted	Acceleration/ deceleration G	Screw lead	Weight kg	Overhang mm A	B	C
Straight	0.15	10	4.5	400	130	220
			9.5	400	60	100
			19	370	20	40
		16	3.5	400	140	220
			7	400	60	100
			14	270	30	40
	1	10	4.5	400	130	210
			9.5	210	60	100
			19	90	20	40
		16	3.5	360	140	200
			7	160	60	90
			14	60	20	40
	2	10	3	400	210	310
			6	220	100	150
			12	90	40	70
		16	2	370	240	290
			4	170	110	140
			8.5	70	50	70
Left/ Right/ Bottom	0.15	10	4.5	400	130	220
			9.5	400	60	100
			19	370	20	40
		16	3.5	400	140	220
			7	400	60	100
			14	270	30	40
	1	10	4.5	400	130	210
			9.5	210	60	100
			19	90	20	40
		16	3.5	360	140	200
			7	160	60	90
			14	60	20	40
	2	10	2.5	400	240	350
			5	250	120	170
			10.5	110	50	80
		16	1.5	400	270	330
			3.5	200	130	160
			7.5	80	60	80

*Screw lead 10 mm at Stroke length: 550 mm
Rated speed: 500 mm/s
Screw lead 16 mm at Stroke length: 550 mm
Rated speed: 800 mm/s.

● EKS-05

Motor mounted	Acceleration/ deceleration G	Screw lead	Weight kg	Overhang mm A	B	C
Straight	0.15	10	6.5	500	160	340
			13	500	70	160
			26	460	30	70
		20	1.5	500	360	500
			3.5	500	170	330
			7.5	500	80	160
	1	10	6	500	160	310
			12.5	270	70	150
			25.5	120	30	70
		20	1.5	500	360	500
			3.5	380	170	270
			7.5	170	80	130
	2	10	1.5	500	500	500
			3.5	500	280	470
			7.5	300	130	230
		20	1	500	490	500
			2.5	330	240	300
			5.5	150	110	150
Left/ Right/ Bottom	0.15	10	6.5	500	160	340
			13	500	70	160
			26	460	30	70
		20	1.5	500	360	500
			3.5	500	170	330
			7.5	500	80	160
	1	10	5.5	500	190	370
			11	320	90	180
			22	140	40	80
		20	1.5	500	360	500
			3.5	380	170	270
			7.5	170	80	130
	2	10	1.5	500	500	500
			3	500	350	500
			6	380	170	290
		20	1	500	500	500
			2.5	360	270	320
			5	160	130	160

*Screw lead 10 mm at Stroke length: 600 mm
Rated speed: 500 mm/s
Screw lead 16 mm at Stroke length: 600 mm
Rated speed: 1000 mm/s.

● EKS-06

Motor mounted	Acceleration/ deceleration G	Screw lead	Weight kg	Overhang mm A	B	C
Straight	0.15	20	11.5	600	120	210
			23.5	460	50	100
			47.5	180	20	40
		30	5	600	290	520
			10	600	140	250
			20.5	550	60	120
	1	20	6.5	490	210	320
			13.5	220	100	160
			27	90	40	70
		30	3.5	600	430	520
			7	350	200	260
			14	150	90	130
	2	20	2	600	600	600
			4.5	460	330	400
			9	210	160	200
		30	1.5	600	600	600
			3.5	420	400	380
			7.5	190	190	200
Left/ Right/ Bottom	0.15	20	11	600	120	230
			22	500	50	100
			44.5	200	20	40
		30	4.5	600	310	570
			9.5	600	150	270
			19	600	70	130
	1	20	5	600	290	430
			10	310	140	210
			22.5	130	60	100
		30	2.5	600	550	600
			5.5	450	270	330
			11	200	120	160
	2	20	1	600	600	600
			2	600	600	600
			4.5	460	330	400
		30	1	600	600	600
			2.5	600	600	570
			5	300	290	290

*Screw lead 20 mm at Stroke length: 650 mm
Rated speed: 1000 mm/s
Screw lead 30 mm at Stroke length: 650 mm
Rated speed: 1500 mm/s.

Allowable moment and overhang length by mounting orientation (EKS Series)

[When installed horizontally]

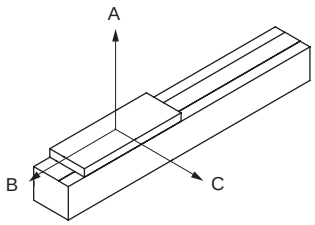

[Allowable overhang length]

● EKS-08

Motor mounted	Acceleration/ deceleration G	Screw lead	Weight kg	Overhang mm A	B	C
Straight	0.15	20	20.5	800	190	320
			41.5	760	90	140
			83.5	310	30	60
		40	4.5	800	680	800
			9.5	800	330	540
			19	800	150	260
	1	20	12	800	340	480
			24.5	380	160	230
			49	160	70	110
		40	4	800	780	770
			8	550	380	380
			16.5	250	180	190
	2	20	3.5	800	800	800
			7	800	610	710
			14	430	300	350
		40	2	800	800	800
			4	690	760	600
			8.5	320	370	300
Left/ Right/ Bottom	0.15	20	19.5	800	200	330
			39.5	800	90	150
			79.5	340	40	60
		40	4.5	800	720	800
			9	800	350	580
			18	800	160	270
	1	20	9.5	800	440	610
			19	500	210	300
			38.5	220	90	140
		40	3	800	800	800
			6.5	680	470	470
			13.5	320	220	230
	2	20	1.5	800	800	800
			3	800	800	800
			6.5	800	660	760
		40	1.5	800	800	800
			3	800	800	800
			6	470	530	420

*Screw lead 20 mm at Stroke length: 700 mm
Rated speed: 1000 mm/s
Screw lead 40 mm at Stroke length: 700 mm
Rated speed: 2000 mm/s.

● EKS-10

Motor mounted	Acceleration/ deceleration G	Screw lead	Weight kg	Overhang mm A	B	C
Straight	0.15	25	42.5	1000	200	350
			85.5	890	90	160
			171.5	360	30	60
		50	10	1000	680	1000
			20	1000	330	590
			40	1000	150	280
	1	25	16	1000	560	770
			32	590	270	380
			64.5	260	120	180
		50	4.5	1000	1000	1000
			9.5	970	710	690
			19	450	340	350
	2	25	4	1000	1000	1000
			8	1000	1000	1000
			16	770	560	640
		50	1.5	1000	1000	1000
			3.5	1000	1000	1000
			7	820	980	740
Left/ Right/ Bottom	0.15	25	40	1000	210	380
			80.5	960	90	170
			161.5	400	40	70
		50	9	1000	730	1000
			18.5	1000	350	630
			37.5	1000	160	300
	1	25	11	1000	830	1000
			22	890	400	560
			44	410	190	280
		50	3	1000	1000	1000
			6.5	1000	1000	1000
			13	690	510	510
	2	50	1	1000	1000	1000
			2.5	1000	1000	1000

*Screw lead 25 mm at Stroke length: 900 mm
Rated speed: 1250 mm/s
Screw lead 50 mm at Stroke length: 900 mm
Rated speed: 2500 mm/s.

Allowable moment and overhang length by mounting orientation (EKS Series)

[When wall-mounted]

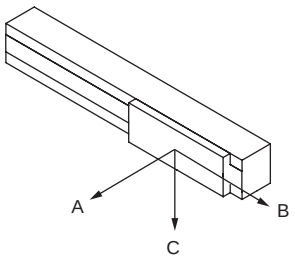

[Allowable overhang length]

● EKS-04

Motor mounted	Acceleration/ deceleration G	Screw lead	Weight kg	Overhang mm A	B	C
Straight	0.15	10	2.5	360	210	400
			5.5	150	90	400
			11	50	30	400
		16	2	360	220	400
			4	150	90	400
			8.5	50	30	350
	1	10	2.5	360	230	400
			5	160	100	400
			10	50	30	180
		16	1.5	340	250	400
			3.5	150	110	310
			7.5	50	40	120
	2	10	2	340	250	400
			4.5	150	110	270
			9.5	50	40	110
		16	1.5	300	270	400
			3.5	130	120	200
			7	50	40	80
Left/ Right/ Bottom	0.15	10	2.5	360	210	400
			5.5	150	90	400
			11	50	30	400
		16	2	360	220	400
			4	150	90	400
			8.5	50	30	350
	1	10	2.5	360	230	400
			5	160	100	400
			10	50	30	180
		16	1.5	340	250	400
			3.5	150	110	310
			7.5	50	40	120
	2	10	2	340	250	400
			4.5	150	110	270
			9.5	50	40	110
		16	1.5	300	270	400
			3.5	130	120	200
			7	50	40	80

*Screw lead 10 mm at Stroke length: 550 mm Rated speed: 500 mm/s
Screw lead 16 mm at Stroke length: 550 mm Rated speed: 800 mm/s.

● EKS-05

Motor mounted	Acceleration/ deceleration G	Screw lead	Weight kg	Overhang mm A	B	C
Straight	0.15	10	4.5	430	200	500
			9.5	190	80	500
			19.5	70	30	500
		20	1.5	500	340	500
			3.5	320	160	500
			7.5	130	60	500
	1	10	4.5	410	210	500
			9	180	90	390
			18	60	30	160
		20	1.5	490	340	500
			3.5	220	150	360
			7.5	90	60	150
	2	10	1.5	500	500	500
			3.5	420	260	500
			7.5	190	120	290
		20	1	500	470	500
			2.5	240	220	320
			5.5	100	90	140
Left/ Right/ Bottom	0.15	10	4.5	430	200	500
			9.5	190	80	500
			19.5	70	30	500
		20	1.5	500	340	500
			3.5	320	160	500
			7.5	130	60	500
	1	10	4.5	410	210	500
			9	180	90	390
			18	60	30	160
		20	1.5	490	340	500
			3.5	220	150	360
			7.5	90	60	150
	2	10	1.5	500	500	500
			3	500	340	500
			6	250	150	370
		20	1	500	500	500
			2.5	270	250	350
			5	120	110	150

*Screw lead 10 mm at Stroke length: 600 mm Rated speed: 500 mm/s
Screw lead 16 mm at Stroke length: 600 mm Rated speed: 1000 mm/s.

● EKS-06

Motor mounted	Acceleration/ deceleration G	Screw lead	Weight kg	Overhang mm A	B	C
Straight	0.15	20	5	480	250	600
			10.5	210	100	600
			21.5	70	30	350
		30	5	510	260	600
			10	220	110	600
			20.5	80	40	390
	1	20	4.5	420	290	600
			9	180	130	320
			18.5	60	40	120
		30	3.5	450	400	600
			7	200	180	320
			14	70	70	120
	2	20	2	600	600	600
			4.5	330	300	450
			9	140	130	200
		30	1.5	600	600	600
			3.5	310	360	400
			7.5	130	160	170
Left/ Right/ Bottom	0.15	20	5	480	250	600
			10.5	210	100	600
			21.5	70	30	350
		30	4.5	550	280	600
			9.5	240	120	600
			19	90	40	440
	1	20	4.5	420	290	600
			9	180	130	320
			18.5	60	40	120
		30	2.5	590	510	600
			5.5	270	240	420
			11	110	100	180
	2	20	1	600	600	600
			2	600	600	600
			4.5	330	300	450
		30	1	600	600	600
			2.5	490	570	600
			5	220	260	290

*Screw lead 20 mm at Stroke length: 650 mm Rated speed: 1000 mm/s
Screw lead 30 mm at Stroke length: 650 mm Rated speed: 1500 mm/s.

Allowable moment and overhang length by mounting orientation (EKS Series)

[When wall-mounted]

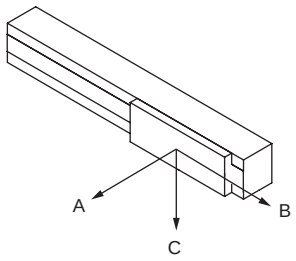

[Allowable overhang length]

● EKS-08

Motor mounted	Acceleration/ deceleration G	Screw lead	Weight kg	Overhang mm A	B	C
Straight	0.15	20	11.5	570	320	800
			23.5	250	140	800
			47.5	90	50	480
		40	4.5	800	640	800
			9.5	530	300	800
			19	230	130	800
	1	20	10.5	510	370	800
			21	220	160	430
			42	80	60	170
		40	4	700	740	800
			8	330	350	520
			16.5	140	150	220
	2	20	3.5	800	800	800
			7	640	580	800
			14	290	270	420
		40	2	800	800	800
			4	510	710	670
			8.5	230	330	310
Left/ Right/ Bottom	0.15	20	11.5	570	320	800
			23.5	250	140	800
			47.5	90	50	480
		40	4.5	800	680	800
			9	560	320	800
			18	240	140	800
	1	20	9.5	560	410	800
			19	250	180	470
			38.5	90	70	190
		40	3	800	800	800
			6.5	410	440	650
			13.5	180	190	290
	2	20	1.5	800	800	800
			3	800	800	800
			6.5	690	630	800
		40	1.5	800	800	800
			3	750	800	800
			6	350	490	460

*Screw lead 20 mm at Stroke length: 700 mm
Rated speed: 1000 mm/s
Screw lead 40 mm at Stroke length: 700 mm
Rated speed: 2000 mm/s.

● EKS-10

Motor mounted	Acceleration/ deceleration G	Screw lead	Weight kg	Overhang mm A	B	C
Straight	0.15	25	21	730	390	1000
			42	310	170	1000
			84	110	60	680
		50	10	1000	640	1000
			20	550	290	1000
			40	220	120	1000
	1	25	16	700	520	1000
			32	310	230	550
			64.5	120	90	220
		50	4.5	1000	1000	1000
			9.5	600	670	920
			19	270	300	410
	2	25	4	1000	1000	1000
			8	1000	1000	1000
			16	550	520	750
		50	1.5	1000	1000	1000
			3.5	1000	1000	1000
			7	620	920	800
Left/ Right/ Bottom	0.15	25	21	730	390	1000
			42	310	170	1000
			84	110	60	680
		50	9	1000	680	1000
			18.5	590	310	1000
			37.5	250	130	1000
	1	25	11	1000	790	1000
			22	490	370	850
			44	210	150	380
		50	3	1000	1000	1000
			6.5	910	1000	1000
			13	420	470	650
	2	50	1	1000	1000	1000
			2.5	1000	1000	1000

*Screw lead 25 mm at Stroke length: 900 mm
Rated speed: 1250 mm/s
Screw lead 50 mm at Stroke length: 900 mm
Rated speed: 2500 mm/s.

Allowable moment and overhang length by mounting orientation (EKS Series)

[When installed vertically]

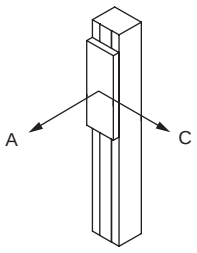

[Allowable overhang length]

● EKS-04

Motor mounted	Acceleration/ deceleration G	Screw lead	Weight kg	Overhang mm A	Overhang mm C
Straight	0.15	10	2	290	290
			4	130	130
			8.5	50	50
		16	1.5	270	270
			3.5	120	120
			7	50	50
	1	10	2	270	270
			4	120	120
			8.5	50	50
		16	1.5	270	270
			3	120	120
			6.5	50	50
	2	10	2	280	280
			4	130	130
			8	50	50
		16	1	290	290
			2.5	130	130
			5.5	50	50
Left/ Right/ Bottom	0.15	10	2	290	290
			4	130	130
			8.5	50	50
		16	1.5	270	270
			3.5	120	120
			7	50	50
	1	10	2	270	270
			4	120	120
			8.5	50	50
		16	1.5	270	270
			3	120	120
			6.5	50	50
	2	10	1.5	350	350
			3	160	160
			6.5	70	70
		16	1	360	360
			2	170	170
			4.5	70	70

*Screw lead 10 mm at Stroke length: 550 mm Rated speed: 500 mm/s
Screw lead 16 mm at Stroke length: 550 mm Rated speed: 800 mm/s.

● EKS-05

Motor mounted	Acceleration/ deceleration G	Screw lead	Weight kg	Overhang mm A	Overhang mm C
Straight	0.15	10	3	320	320
			6	140	140
			12.5	60	60
		20	1.5	420	420
			3	190	190
			6	80	80
	1	10	3	320	320
			6	140	140
			12	60	60
		20	1	400	400
			2.5	190	190
			5.5	80	80
	2	10	1	500	500
			2.5	370	370
			5	170	170
		20	1.5	280	280
			3.5	120	120
			-	-	-
Left/ Right/ Bottom	0.15	10	2.5	350	350
			5.5	160	160
			11.5	60	60
		20	1	460	460
			2.5	210	210
			5.5	90	90
	1	10	2.5	370	370
			5	170	170
			10.5	70	70
		20	1	500	500
			2	240	240
			4.5	100	100
	2	10	1	500	500
			2	470	470
			4	220	220
		20	1.5	330	330
			3	150	150
			-	-	-

*Screw lead 10 mm at Stroke length: 600 mm Rated speed: 500 mm/s
Screw lead 16 mm at Stroke length: 600 mm Rated speed: 1000 mm/s.

● EKS-06

Motor mounted	Acceleration/ deceleration G	Screw lead	Weight kg	Overhang mm A	Overhang mm C
Straight	0.15	20	3	440	440
			6	200	200
			12.5	80	80
		30	2	600	600
			4	340	340
			8	150	150
	1	20	2.5	450	450
			5.5	210	210
			11	90	90
		30	1.5	600	600
			3	330	330
			6.5	150	150
	2	20	1.5	600	600
			3	370	370
			6	170	170
		30	1	600	600
			2	420	420
			4.5	190	190
Left/ Right/ Bottom	0.15	20	2.5	510	510
			5.5	240	240
			11	100	100
		30	1.5	600	600
			3.5	390	390
			7	180	180
	1	20	2	560	560
			4.5	260	260
			9	110	110
		30	1	600	600
			2.5	440	440
			5	200	200
	2	20	1	600	600
			2.5	450	450
			-	-	-
		30	1.5	600	600
			3	310	310
			-	-	-

*Screw lead 20 mm at Stroke length: 650 mm Rated speed: 1000 mm/s
Screw lead 30 mm at Stroke length: 650 mm Rated speed: 1500 mm/s.

Allowable moment and overhang length by mounting orientation (EKS Series)

[When installed vertically]

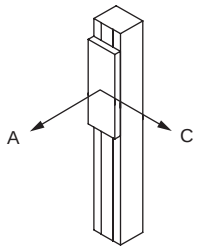

[Allowable overhang length]

● EKS-08

Motor mounted	Acceleration/ deceleration G	Screw lead	Weight kg	Overhang mm A	Overhang mm C
Straight	0.15	20	6	670	670
			12	320	320
			24.5	140	140
		40	2.5	800	800
			5.5	520	520
			11.5	240	240
	1	20	5	690	690
			10.5	330	330
			21.5	150	150
		40	2	800	800
			4	510	510
			8.5	240	240
	2	20	2	800	800
			4	800	800
			8.5	380	380
		40	1	800	800
			2.5	670	670
			5.5	320	320
Left/ Right/ Bottom	0.15	20	5.5	730	730
			11	350	350
			22.5	160	160
		40	2.5	800	800
			5	610	610
			10	290	290
	1	20	4.5	800	800
			9	400	400
			18	180	180
		40	1.5	800	800
			3.5	630	630
			7	300	300
	2	20	1.5	800	800
			3.5	800	800
			-	-	-
		40	1	800	800
			2	800	800
			4	450	450

*Screw lead 20 mm at Stroke length: 700 mm
Rated speed: 1000 mm/s
Screw lead 40 mm at Stroke length: 700 mm
Rated speed: 2000 mm/s.

● EKS-10

Motor mounted	Acceleration/ deceleration G	Screw lead	Weight kg	Overhang mm A	Overhang mm C
Straight	0.15	25	9	950	950
			18.5	450	450
			37	200	200
		50	4	1000	1000
			8.5	760	760
			17	360	360
	1	25	7	1000	1000
			14	530	530
			28	240	240
		50	2.5	1000	1000
			5	850	850
			10.5	400	400
	2	25	2	1000	1000
			4.5	1000	1000
			9.5	720	720
		50	1	1000	1000
			2.5	1000	1000
			5	730	730
Left/ Right/ Bottom	0.15	25	8	1000	1000
			16	520	520
			32.5	240	240
		50	3.5	1000	1000
			7	900	900
			14.5	430	430
	1	25	5	1000	1000
			10.5	720	720
			21	340	340
		50	1.5	1000	1000
			3.5	1000	1000
			7.5	580	580
	2	50	1	1000	1000
			2	1000	1000

*Screw lead 25 mm at Stroke length: 900 mm
Rated speed: 1250 mm/s
Screw lead 50 mm at Stroke length: 900 mm
Rated speed: 2500 mm/s.

Table of Load Capacity by Acceleration/deceleration

[EKS Series (straight motor mounting)]

*The table below lists the max. load capacity at each acceleration/deceleration.
Refer to the model that satisfies the required operation conditions.

When installed horizontally

Unit: kg

Model	Screw lead	Acceleration/deceleration (G)					
		0.15	0.3	0.5	1	1.5	2
EKS-04	10	19	19	19	19	18	12
	16	14	14	14	14	11.5	8.5
EKS-05	10	26	26	26	25.5	13.5	7.5
	20	7.5	7.5	7.5	7.5	7.5	5.5
EKS-06	20	47.5	47.5	42	27	15	9
	30	20.5	20.5	20.5	14	10	7.5
EKS-08	20	83.5	83.5	83.5	49	25.5	14
	40	19	19	19	16.5	11	8.5
EKS-10	25	171.5	171.5	118.5	64.5	33.5	16
	50	40	40	40	19	11	7

* 2G or more may also be supported in some cases. Contact CKD for details.

When wall-mounted

Unit: kg

Model	Screw lead	Acceleration/deceleration (G)					
		0.15	0.3	0.5	1	1.5	2
EKS-04	10	11	10.5	10.5	10	10	9.5
	16	8.5	8.5	8	7.5	7	7
EKS-05	10	19.5	19	19	18	13.5	7.5
	20	7.5	7.5	7.5	7.5	7.5	5.5
EKS-06	20	21.5	21	20	18.5	15	9
	30	20.5	19.5	18	14	10	7.5
EKS-08	20	47.5	46.5	45	42	25.5	14
	40	19	19	19	16.5	11	8.5
EKS-10	25	84	79.5	76	64.5	33.5	16
	50	40	40	40	19	11	7

* 2G or more may also be supported in some cases. Contact CKD for details.

When installed vertically

Unit: kg

Model	Screw lead	Acceleration/deceleration (G)					
		0.15	0.3	0.5	1	1.5	2
EKS-04	10	8.5	8.5	8.5	8.5	8.5	8
	16	7	7	7	6.5	6.5	5.5
EKS-05	10	12.5	12.5	12.5	12	8	5
	20	6	6	6	5.5	5	3.5
EKS-06	20	12.5	12.5	12	11	8.5	6
	30	8	8	7.5	6.5	5.5	4.5
EKS-08	20	24.5	24	23.5	21.5	14.5	8.5
	40	11.5	11	10.5	8.5	7	5.5
EKS-10	25	37	35.5	33.5	28	19	9.5
	50	17	16	14.5	10.5	7.5	5

* 2G or more may also be supported in some cases. Contact CKD for details.

Table of Load Capacity by Acceleration/deceleration

[EKS Series (motor mounting on side/bottom)]

*The table below lists the max. load capacity at each acceleration/deceleration.
Refer to the model that satisfies the required operation conditions.

When installed horizontally

Unit: kg

Model	Screw lead	Acceleration/deceleration (G)					
		0.15	0.3	0.5	1	1.5	2
EKS-04	10	19	19	19	19	15.5	10.5
	16	14	14	14	14	10.5	7.5
EKS-05	10	26	26	26	22	11.5	6
	20	7.5	7.5	7.5	7.5	7.5	5
EKS-06	20	44.5	44.5	41	20.5	10	4.5
	30	19	19	19	11	7.5	5
EKS-08	20	79.5	79.5	79.5	38.5	17	6.5
	40	18	18	18	13.5	8.5	6
EKS-10	25	161.5	150	92.5	44	16.5	0.5
	50	37.5	37.5	37.5	13	6	2.5

* 2G or more may also be supported in some cases. Contact CKD for details.

When wall-mounted

Unit: kg

Model	Screw lead	Acceleration/deceleration (G)					
		0.15	0.3	0.5	1	1.5	2
EKS-04	10	11	10.5	10.5	10	10	9.5
	16	8.5	8.5	8	7.5	7	7
EKS-05	10	19.5	19	19	18	11.5	6
	20	7.5	7.5	7.5	7.5	7.5	5
EKS-06	20	21.5	21	20	18.5	10	4.5
	30	19	19	18	11	7.5	5
EKS-08	20	47.5	46.5	45	38.5	17	6.5
	40	18	18	18	13.5	8.5	6
EKS-10	25	84	79.5	76	44	16.5	0.5
	50	37.5	37.5	37.5	13	6	2.5

* 2G or more may also be supported in some cases. Contact CKD for details.

When installed vertically

Unit: kg

Model	Screw lead	Acceleration/deceleration (G)					
		0.15	0.3	0.5	1	1.5	2
EKS-04	10	8.5	8.5	8.5	8.5	8.5	6.5
	16	7	7	7	6.5	6	4.5
EKS-05	10	11.5	11.5	11.5	10.5	6.5	4
	20	5.5	5.5	5	4.5	4.5	3
EKS-06	20	11	11	10.5	9	5.5	2.5
	30	7	7	6.5	5	4.5	3
EKS-08	20	22.5	21.5	20.5	18	9.5	3.5
	40	10	10	9	7	5.5	4
EKS-10	25	32.5	30.5	28	21	8.5	-
	50	14.5	14	12.5	7.5	4	2

* 2G or more may also be supported in some cases. Contact CKD for details.

Origin sensor, limit sensor (motorless option)

[Specifications]

Item		Specifications
Manufacturer	Manufacturer	OMRON Corporation
	Model	EE-SX674
Hysteresis		0.025 mm or less
Light source (peak emission wavelength)		GaAs infrared LED (940 nm)
Indicator lamp		ON when receiving light (red)
Power supply voltage		5 to 24 VDC ±10% ripple (P-P) 10% or less
Current consumption		12 mA or less (with L terminal open)
Control output	Type	NPN (NPN open collector)
	Output	5 to 24 VDC 100mA or less
	Current when OFF	0.5 mA or less
	Residual voltage	0.8 V or less (with 100 mA load current)
		0.4 V or less (with 40 mA load current)
Operating ambient illumination		Light-receiving surface luminance Fluorescent light: 1,000 lx or less
Ambient temperature range	Operating	-25 to +55°C, no condensation or freezing
	In storage	-30 to +80°C, no condensation or freezing
Ambient humidity range	Operating	5 to 85% RH, no condensation or freezing
	In storage	5 to 95% RH, no condensation or freezing
Degree of protection		IP50 IEC 60529 Standards
Connection		Connector type (can be directly soldered)

*For connectors, see “Photomicrosensor accessories” in the OMRON EE-SX47 catalog.

Output circuit

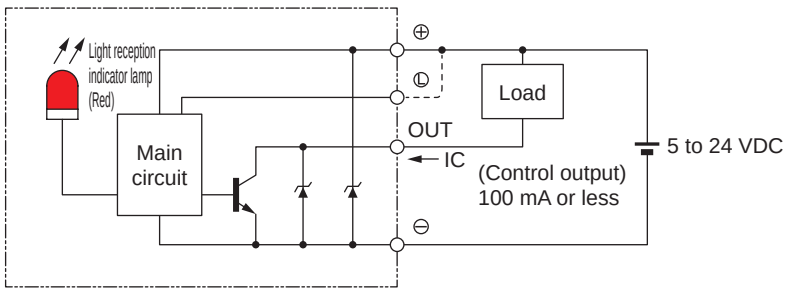

Wiring diagram

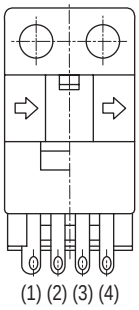

Terminal layout

(1)	⊕	Vcc
(2)	L	L
(3)	OUT	OUTPUT
(4)	⊖	GND (0 V)

List of attachments

For straight motor mounting

Accessories: Intermediate flange, coupling, motor mounting bolts

List of attachments

Model No.	Mounted motor specification	Motor capacity	Included parts			
			Intermediate flange mounting bolt		Motor mounting bolt	
			Size	Quantity	Size	Quantity
EKS-04	M	50 W 100 W	M3	2	M4	4
	Y				M4	
	P				M3	
EKS-05	M	100 W	M3	2	M4	4
	Y				M4	
	P				M3	
EKS-06	M	200 W	M4	4	M5	4
	Y				M5	
	P				M4	
EKS-08	M	400 W	M4	4	M5	4
	Y				M5	
	P				M4	
EKS-10	M	750 W	M5	4	M6	4
	Y				M6	
	P				M5	

For motor mounting on side/bottom

Accessories: Motor mounting plate, pulley, timing belt, belt tension adjustment jig, motor mounting bolts

List of attachments

Model No.	Mounted motor specification	Motor capacity	Included parts			
			Motor mounting plate mounting bolt		Motor mounting bolt	
			Size	Quantity	Size	Quantity
EKS-04	M	50 W 100 W	M3	4	M4	4
	Y				M4	
	P				M3	
EKS-05	M	100 W	M3	4	M4	4
	Y				M4	
	P				M3	
EKS-06	M	200 W	M4	4	M5	4
	Y				M5	
	P				M4	
EKS-08	M	400 W	M4	4	M5	4
	Y				M5	
	P				M4	
EKS-10	M	750 W	M5	4	M6	4
	Y				M6	
	P				M5	

MEMO

Stepper motor compatible electric actuator

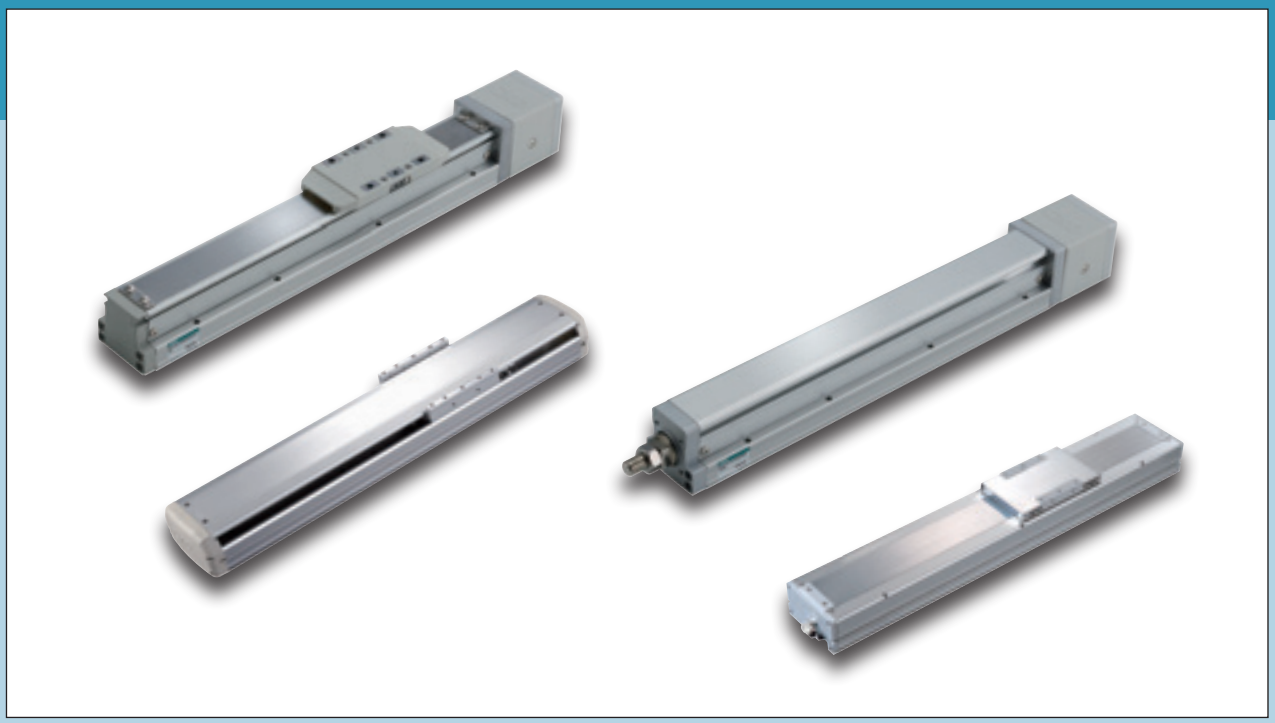

CONTENTS

Product introduction		Intro
■ Slider (standard model)	EBS-L	517
■ Rod with built-in guide	EBR-L	551
■ Slider (ball screw drive)	ETS	583
■ Slider (ball screw drive low dust specifications)	ECS	637
⚠ Safety precautions		686
Model selection check sheet		708

Safety precautions

Stepper motor compatible				Servo motor compatible							
ECS	ETS	EBR	EBS	EKS	ECV	ETV	ECS	ETS Multi-Axis	ETS	EBR	EBS

Stepper motor compatible
electric actuator
Motorless specifications

EBS-L

Slider (standard model)

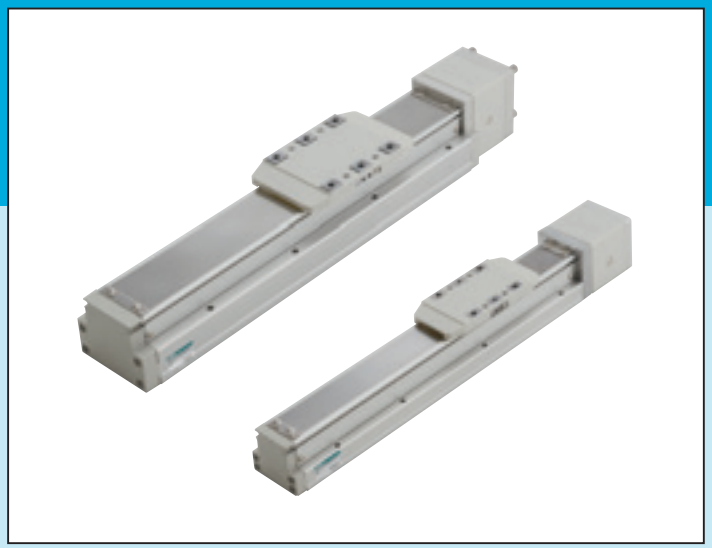

CONTENTS

Product introduction	Intro
Series variation	518
● Specifications/How to order/Dimensions	
· EBS-04L	520
· EBS-05L	526
· EBS-08L	532
● Model selection	538
● Technical data	540
⚠ Safety precautions	686
Model Selection Check Sheet	708

Series variation

Type	Model No.		Applicable motor size	Body width (mm)	Screw lead (mm)	Max. load capacity (kg) *2 Horizontal *1	Max. load capacity (kg) *2 Vertical	Stroke length (mm) and max. speed (mm/s) *3	Page
Slider		EBS-04L*-06	□42	44	6	20	5	50 mm to 550: 300 mm/s; *4 1.7 sec	520
		EBS-04L*-12			12	12	2	50 mm to 600: 600; 0.89 sec	
		EBS-05L*-02	□42	54	2	30	10	50 mm to 100: 100; 90 80 70 60; 13.34 sec	526
		EBS-05L*-05			5	30	10	50 mm to 250: 250; 225 200 175 150; 5.35 sec	
		EBS-05L*-10			10	15	5	50 mm to 500: 500; 450 400 350 300; 2.7 sec	
		EBS-05L*-20			20	10	2.5	50 mm to 1000: 1000; 900 800 700 600; 1.39 sec	
		EBS-08L*-05	□56 □60	82	5	50	15	50 mm to 250: 250; 225 200 175 150 125 100 75 50; 22.01 sec	532
		EBS-08L*-10			10	30	8	50 mm to 500: 500; 450 400 350 300 250 200 150 100; 11.01 sec	
		EBS-08L*-20			20	12	2.5	50 mm to 1000: 1000; 900 800 700 600 500 400 300 200; 5.52 sec	

*1: The load capacity when wall mounted is the same as for horizontal installation.
*2: The rated thrust and max. load capacity values are the allowable values for the actuator body; the actual thrust and load capacity are limited by the motor used.
*3: The max. speed is the speed when the motor mounted by the customer can output a rotation speed of 3000 rpm.
The max. speed is restricted by the stroke. Do not move at speeds beyond the limit.
*4: ⏱ shows the positioning time. Maximum stroke when installed horizontally and operated at max. speed and max. acceleration/deceleration. Note that this is not the value at maximum load capacity.

How to order

Slider

EBS - 05 L E - 02 0300 N NN - A A N N

(A) (B) (C) (D) (E) (F) (G) (H) (I) (J)

(A) Body size

04	Body width 44 mm
05	Body width 54 mm
08	Body width 82 mm

(B) Motor

L	None

(C) Motor mounting direction

E	Straight mounting
R	Right mounting
D	Bottom mounting
L	Left mounting

(D) Screw lead

02	2 mm
05	5 mm
06	6 mm
10	10 mm
12	12 mm
20	20 mm

(E) Stroke length

0050 to 1100	50 mm (In 50 mm increments) 1100 mm

(F) Brake

N	None

(G) Mounted motor specification

A B C	Refer to the list on the page at right

(H) Motor size

A	□42
B	□56
C	□60

(I) Origin sensor

N	None
C	Yes

(J) Limit sensor

N	None
B	Yes

*This product is composed of an actuator (and motor mounting parts) only; there is no motor attached.
The user must prepare, mount, and adjust the motor and driver.

List of stepper motors recommended for mounting

Code	Manufacturer	Series	□42	□56	□60
A	Oriental Motor Co., Ltd.	AZ	AZM46 □0 □	-	AZM66 □0 □ AZM69 □0 □
		AR	ARM46 □0 □	-	ARM66 □0 □ ARM69 □0 □
B	MinebeaMitsumi Inc.	A17PM/A23KM	A17PM □□□□ CSTBCN	A23KM □□□□ CSTBCN	-
B	Dyadic Systems Co., Ltd.	RMJ	RMJ0411	-	-
C		RMJ	-	RMJ0611/RMJ1211	-

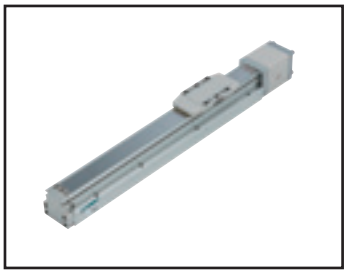

Electric actuator (motorless) Slider

EBS-04LE

Straight motor mounting

● Stepper motor size: □42

RoHS

How to order

EBS - 04 L E - 06 0300 N NN - A A N N

Ⓐ 04 Body width 44 mm

Ⓑ L None

Ⓒ E Straight mounting

Ⓓ 06 6 mm; 12 12 mm

Ⓔ 0050 to 0500 50 mm (In 50 mm increments) 500 mm

Ⓕ N None

Ⓖ A Select the mounted motor specification from the table at right. B

Ⓗ A □42

Ⓘ N None; C Yes

Ⓙ N None; B Yes

Manufacturer	□42
Oriental Motor Co., Ltd.	A
MinebeaMitsumi Inc.	B
Dyadic Systems Co., Ltd.	B

*Refer to page 519 for the motor model No.

*1 Origin sensor and limit sensor are available as a set. As it is both-or-nothing, select "None" for both.

Specifications

Applicable motor sizes		□42 Stepper motor	
Drive method		Ball screw ø10	
Stroke length	mm	50 to 500	
Screw lead	mm	6	12
Max. load capacity *1	Horizontal kg	20	12
	Vertical kg	5	2
Max. speed	mm/s	300	600
Rated thrust *1	N	141	71
Repeatability	mm	±0.01	
Lost motion	mm	0.1 or less	
Static allowable load	N	1030	
Static allowable moment	N·m	MP: 62, MY: 62, MR: 92	
Drive system weight	kg	0.3	
Other inertia	kg·cm²	0.045	
Coefficient of friction		0.03	
Mechanical efficiency		0.8	
Sliding resistance	N	6	
Ball screw length		Stroke + 200	
Operating ambient temperature, humidity		0 to 40°C (no freezing) 35 to 80% RH (no condensation)	
Storage ambient temperature, humidity		-10 to 50°C (no freezing) 35 to 80% RH (no condensation)	
Atmosphere		No corrosive gas, explosive gas, or dust	

*1 The rated thrust and max. load capacity values are the allowable values for the actuator body; the actual thrust and load capacity are limited by the motor used.

Stroke and max. speed

(mm/s)

Screw lead \ Stroke length	50 to 500
6	300
12	600

*Max. speed is when the motor mounted by the customer can output rotation speed of 3000 rpm.
The max. speed is restricted by the stroke. Do not move at speeds beyond the limit.

Allowable overhang length

*Refer to page 540 for details.

Moment direction

MP MY MR

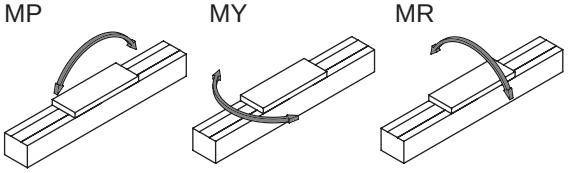

Dimensions Straight motor mounting

EBS-04LE

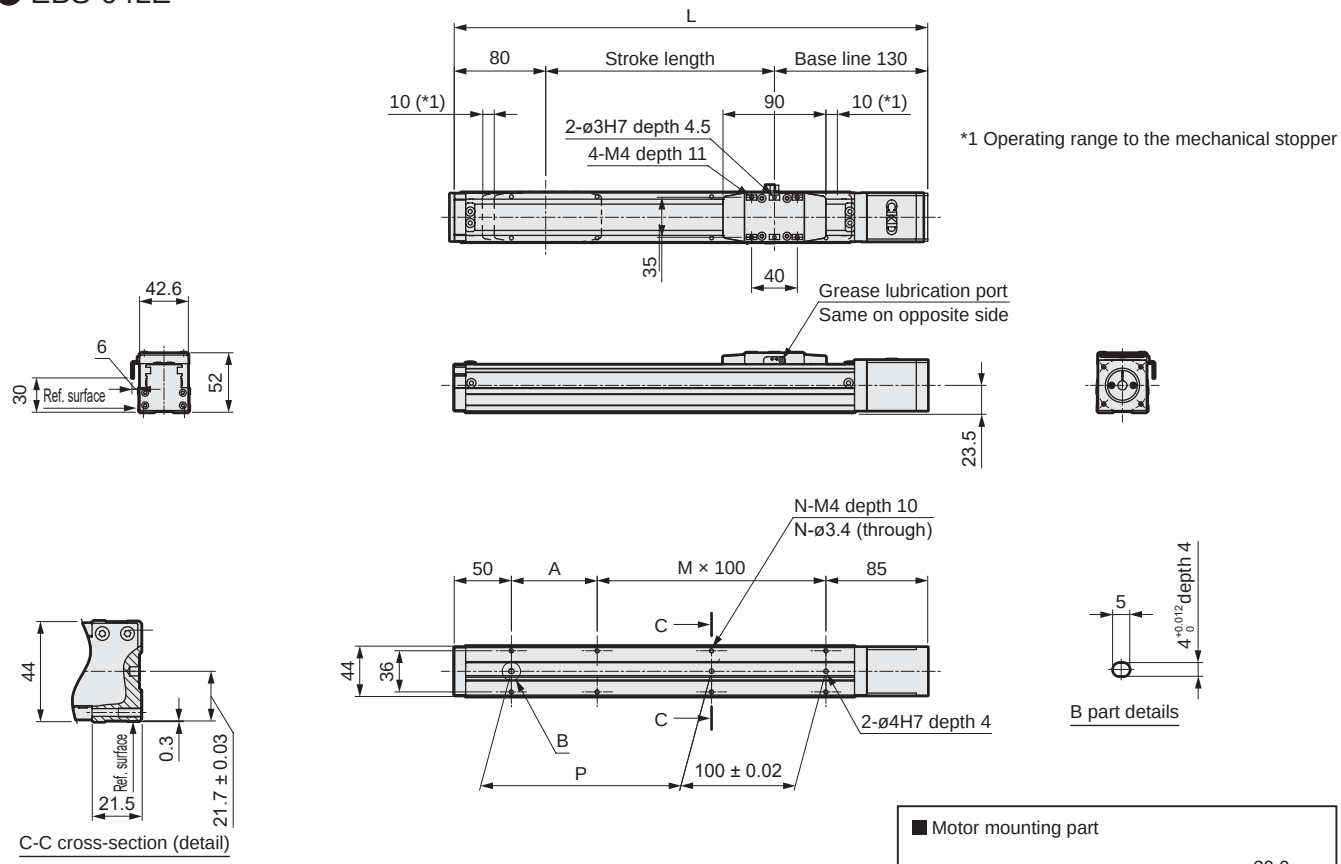

■ When origin/limit sensors are mounted

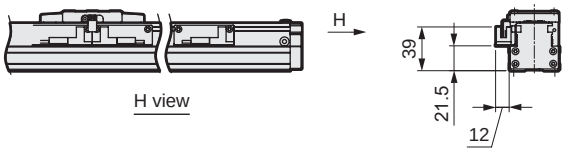

*For stroke of 50 mm,
sensors must be mounted on both sides.
Sensor dogs are also mounted on both sides.

■ Motor mounting part

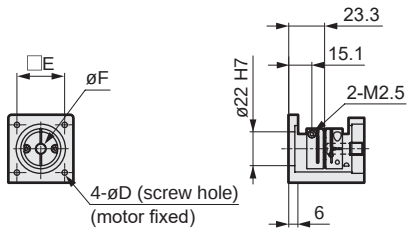

Mounted motor specification	D	E	F	Motor mounting bolt
A	3.5	31	6	4-M3 × L12
B	3.5	31	5	4-M3 × L12

Stroke code	0050	0100	0150	0200	0250	0300	0350	0400	0450	0500
Stroke length (mm)	50	100	150	200	250	300	350	400	450	500
L	260	310	360	410	460	510	560	610	660	710
A	25	75	25	75	25	75	25	75	25	75
M	1	1	2	2	3	3	4	4	5	5
N	6	6	8	8	10	10	12	12	14	14
P	25	75	125	175	225	275	325	375	425	475
Weight (kg)	1.0	1.1	1.3	1.5	1.7	1.8	2.0	2.2	2.4	2.6

List of attachments

[Motor mounting parts]

Mounted motor specification	Coupling	Motor mounting bolt	
		Size	Quantity
A	Assembled at shipment	M3	4
B		M3	4

[Origin sensor, limit sensor]

Sensor		
Manufacturer	Model	Included quantity
OMRON Corporation	EE-SX674	3

*Refer to page 548 for sensor specifications.

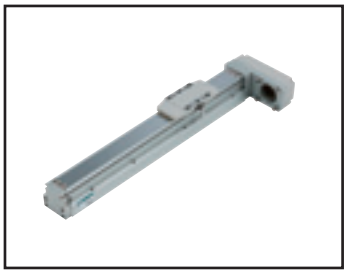

Electric actuator (motorless) Slider

EBS-04L*

Motor side mounting (left, right, bottom)

● Stepper motor size: □42

RoHS

How to order

EBS - 04 L R - 06 0300 N NN - A A N N

Ⓐ 04 Body width 44 mm

Ⓑ L None

Ⓒ R Right mounting; D Bottom mounting; L Left mounting

Ⓓ 06 6 mm; 12 12 mm

Ⓔ 0050 to 0500 50 mm (In 50 mm increments) 500 mm

Ⓕ N None

Ⓖ A Select the mounted motor specification from the table at right. B

Ⓗ A □42

Ⓘ N None; C Yes

Ⓙ N None; B Yes

Manufacturer	□42
Oriental Motor Co., Ltd.	A
MinebeaMitsumi Inc.	B
Dyadic Systems Co., Ltd.	B

*Refer to page 519 for the motor model No.

*1 Origin sensor and limit sensor are available as a set. As it is both-or-nothing, select "None" for both.

Specifications

Applicable motor sizes		□42 Stepper motor	
Drive method		Ball screw ø10	
Stroke length	mm	50 to 500	
Screw lead	mm	6	12
Max. load capacity *1	Horizontal kg	20	12
	Vertical kg	5	2
Max. speed	mm/s	300	600
Rated thrust *1	N	141	71
Repeatability	mm	±0.01	
Lost motion	mm	0.1 or less	
Static allowable load	N	1030	
Static allowable moment	N·m	MP: 62, MY: 62, MR: 92	
Drive system weight	kg	0.3	
Other inertia	kg·cm²	0.09	
Coefficient of friction		0.03	
Mechanical efficiency		0.8	
Sliding resistance	N	6	
Ball screw length		Stroke + 200	
Operating ambient temperature, humidity		0 to 40°C (no freezing) 35 to 80% RH (no condensation)	
Storage ambient temperature, humidity		-10 to 50°C (no freezing) 35 to 80% RH (no condensation)	
Atmosphere		No corrosive gas, explosive gas, or dust	

*1 The rated thrust and max. load capacity values are the allowable values for the actuator body; the actual thrust and load capacity are limited by the motor used.

Stroke and max. speed

(mm/s)

Screw lead \ Stroke length	50 to 500
6	300
12	600

*Max. speed is when the motor mounted by the customer can output rotation speed of 3000 rpm.
The max. speed is restricted by the stroke. Do not move at speeds beyond the limit.

Allowable overhang length

*Refer to page 540 for details.

Moment direction

MP MY MR

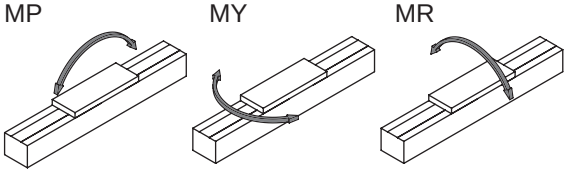

Dimensions Motor right-side mounting

● EBS-04LR

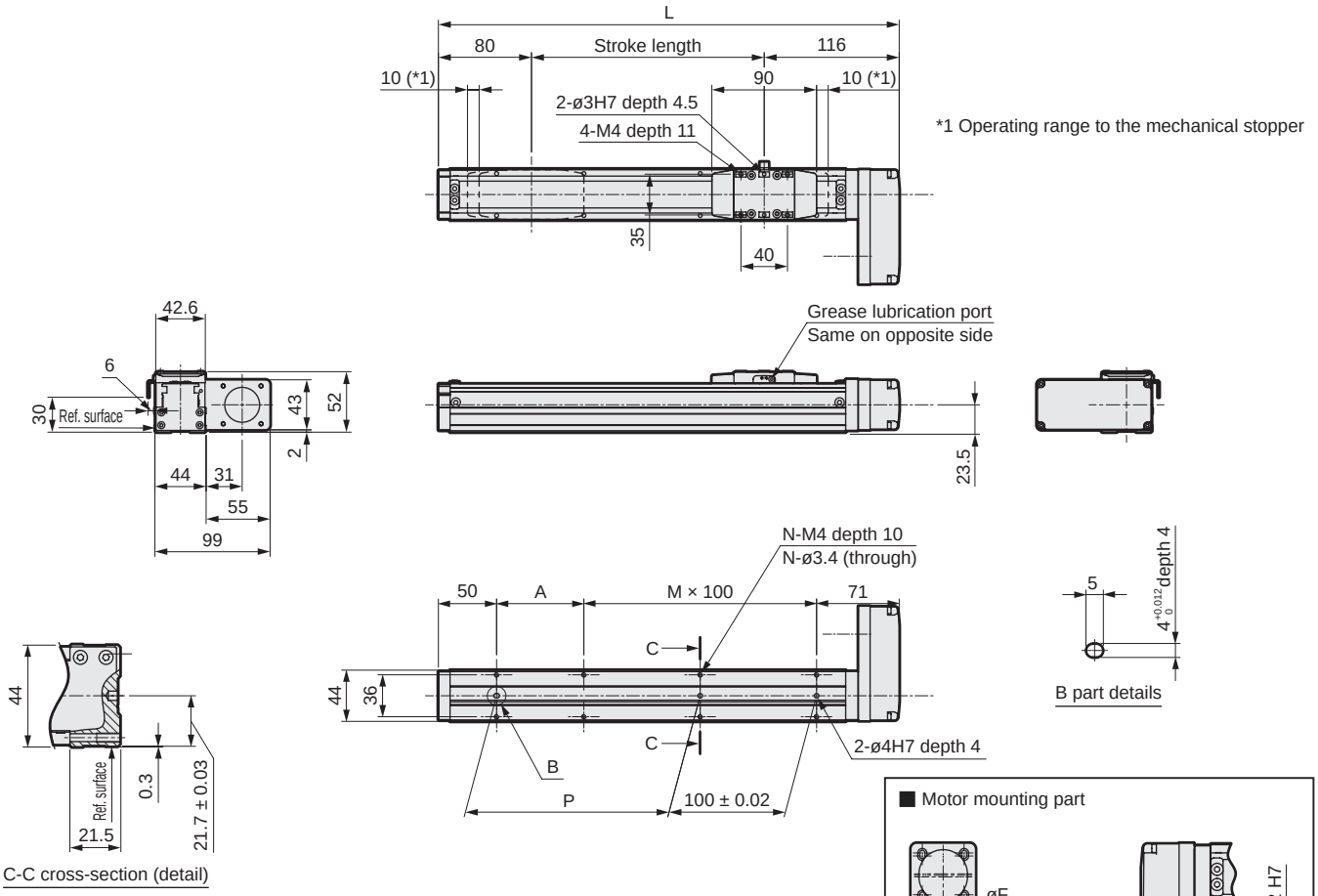

■ When origin/limit sensors are mounted

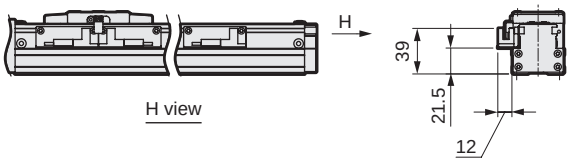

H view

*For stroke of 50 mm,
sensors must be mounted on both sides.
Sensor dogs are also mounted on both sides.

■ Motor mounting part

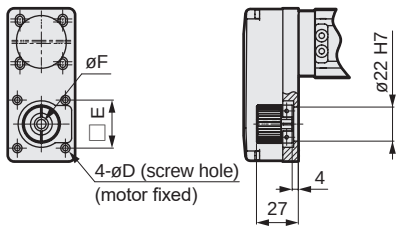

Mounted motor specification	D	E	F	Motor mounting bolt
A	3.5	31	6	4-M3 × L12
B	3.5	31	5	4-M3 × L12

Stroke code	0050	0100	0150	0200	0250	0300	0350	0400	0450	0500
Stroke length (mm)	50	100	150	200	250	300	350	400	450	500
L	246	296	346	396	446	496	546	596	646	696
A	25	75	25	75	25	75	25	75	25	75
M	1	1	2	2	3	3	4	4	5	5
N	6	6	8	8	10	10	12	12	14	14
P	25	75	125	175	225	275	325	375	425	475
Weight (kg)	1.0	1.2	1.4	1.7	1.8	1.9	2.1	2.3	2.5	2.7

List of attachments

[Motor mounting parts]

Mounted motor specification	Timing belt, pulley	Motor mounting bolt	
		Size	Quantity
A	Included at shipment	M3	4
B		M3	4

[Origin sensor, limit sensor]

Sensor		
Manufacturer	Model	Included quantity
OMRON Corporation	EE-SX674	3

*Refer to page 548 for sensor specifications.

Dimensions Motor bottom mounting

● EBS-04LD

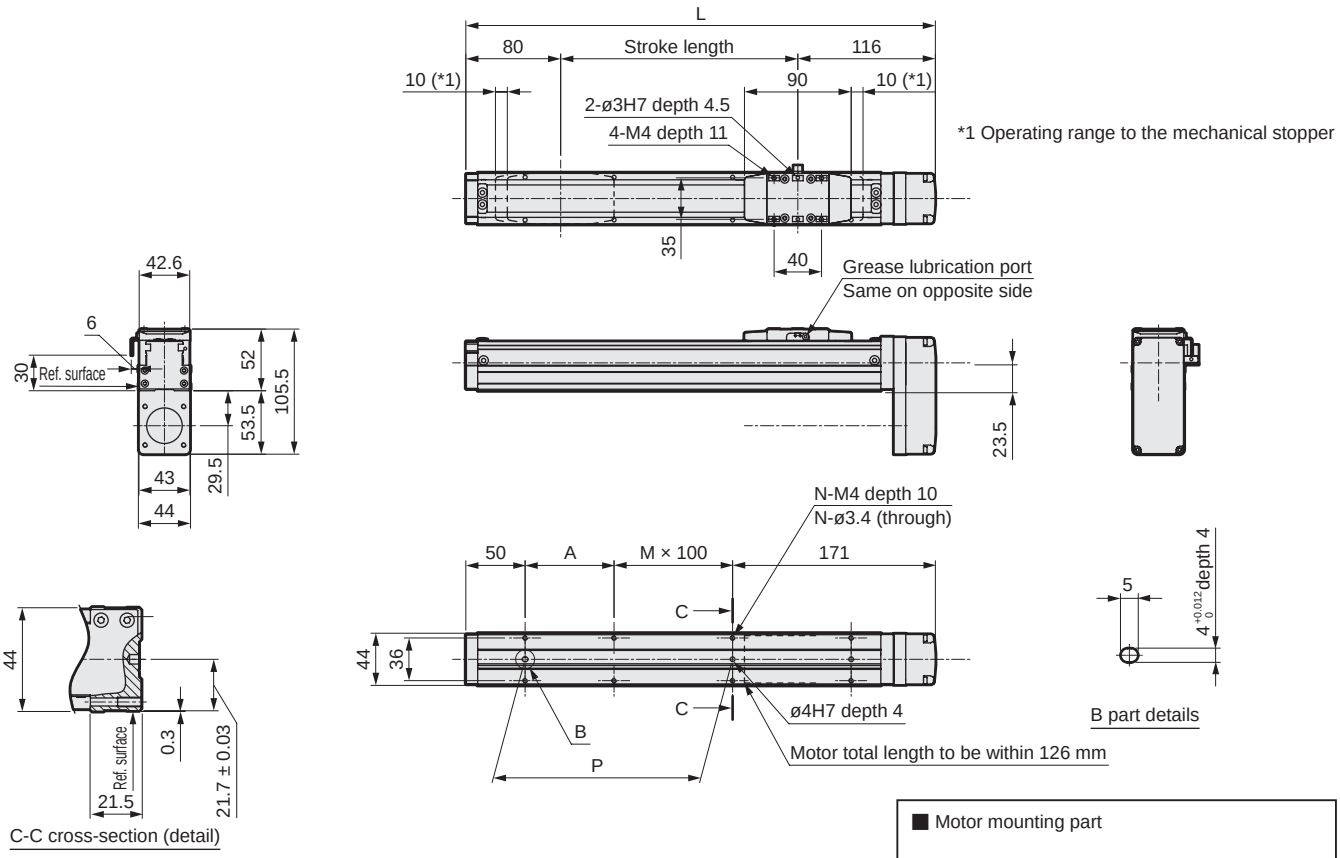

*1 Operating range to the mechanical stopper

■ When origin/limit sensors are mounted

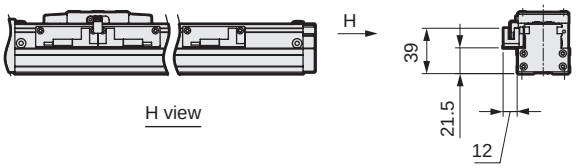

H view

*For stroke of 50 mm,
sensors must be mounted on both sides.
Sensor dogs are also mounted on both sides.

■ Motor mounting part

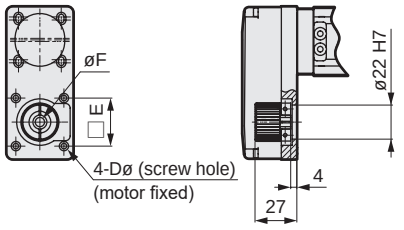

Mounted motor specification	D	E	F	Motor mounting bolt
A	3.5	31	6	4-M3 × L12
B	3.5	31	5	4-M3 × L12

Stroke code	0050	0100	0150	0200	0250	0300	0350	0400	0450	0500
Stroke length (mm)	50	100	150	200	250	300	350	400	450	500
L	246	296	346	396	446	496	546	596	646	696
A	25	75	25	75	25	75	25	75	25	75
M	0	0	1	1	2	2	3	3	4	4
N	4	4	6	6	8	8	10	10	12	12
P	25	75	125	175	225	275	325	375	425	475
Weight (kg)	1.0	1.2	1.4	1.7	1.8	1.9	2.1	2.3	2.5	2.7

List of attachments

[Motor mounting parts]

Mounted motor specification	Timing belt, pulley	Motor mounting bolt	
		Size	Quantity
A	Included at shipment	M3	4
B		M3	4

[Origin sensor, limit sensor]

Sensor		
Manufacturer	Model	Included quantity
OMRON Corporation	EE-SX674	3

*Refer to page 548 for sensor specifications.

Dimensions Motor left-side mounting

● EBS-04LL

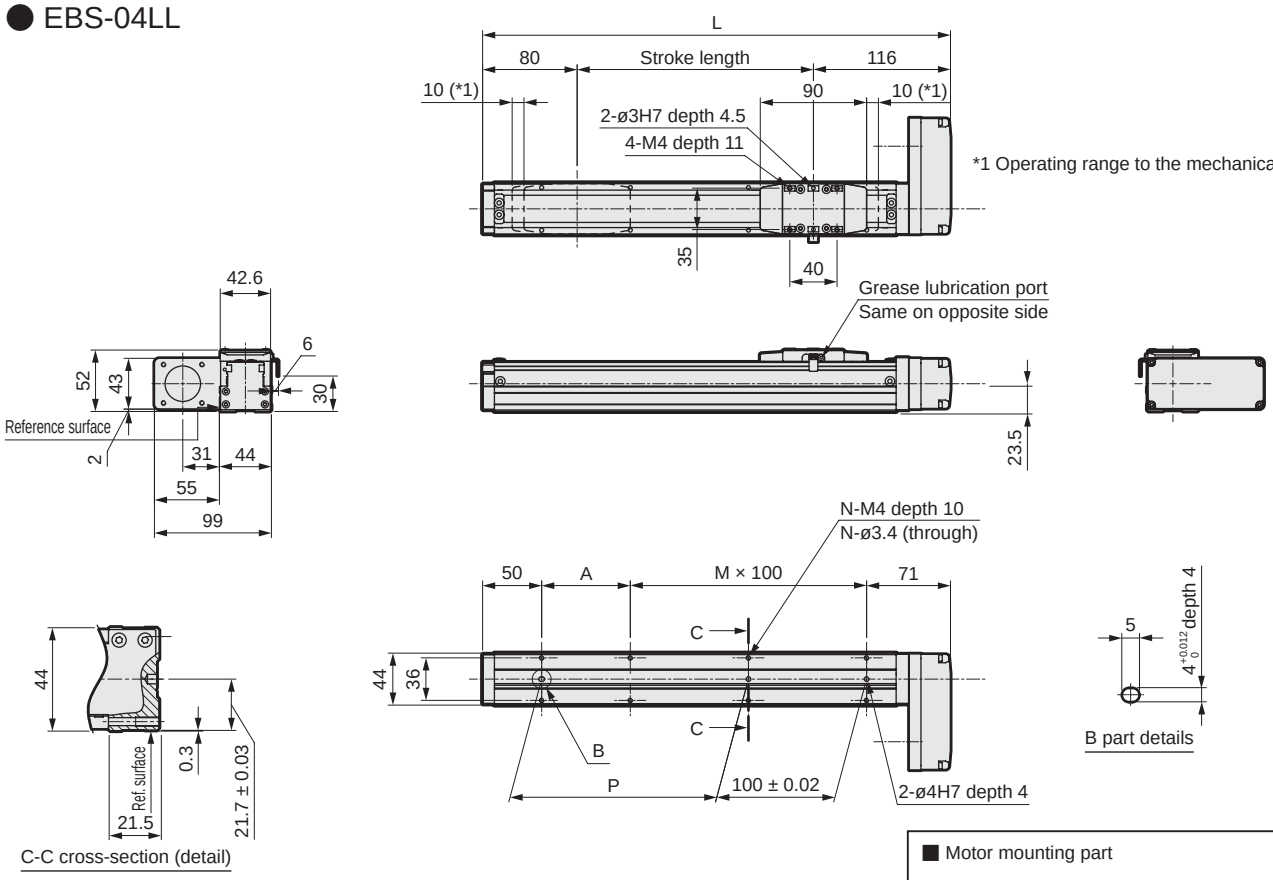

■ When origin/limit sensors are mounted

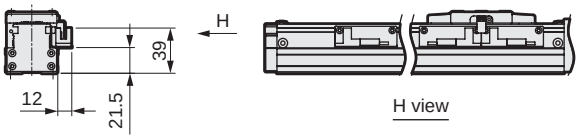

*For stroke of 50 mm,
sensors must be mounted on both sides.
Sensor dogs are also mounted on both sides.

■ Motor mounting part

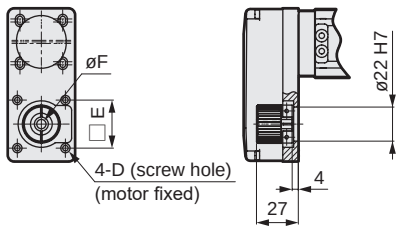

Mounted motor specification	D	E	F	Motor mounting bolt
A	3.5	31	6	4-M3 × L12
B	3.5	31	5	4-M3 × L12

Stroke code	0050	0100	0150	0200	0250	0300	0350	0400	0450	0500
Stroke length (mm)	50	100	150	200	250	300	350	400	450	500
L	246	296	346	396	446	496	546	596	646	696
A	25	75	25	75	25	75	25	75	25	75
M	1	1	2	2	3	3	4	4	5	5
N	6	6	8	8	10	10	12	12	14	14
P	25	75	125	175	225	275	325	375	425	475
Weight (kg)	1.0	1.2	1.4	1.7	1.8	1.9	2.1	2.3	2.5	2.7

List of attachments

[Motor mounting parts]

Mounted motor specification	Timing belt, pulley	Motor mounting bolt	
		Size	Quantity
A	Included at shipment	M3	4
B		M3	4

[Origin sensor, limit sensor]

Sensor		
Manufacturer	Model	Included quantity
OMRON Corporation	EE-SX674	3

*Refer to page 548 for sensor specifications.

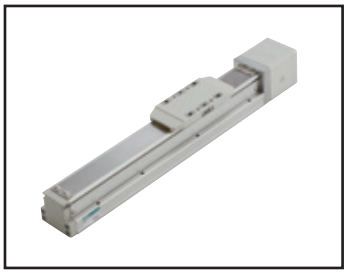

Electric actuator (motorless) Slider

EBS-05LE

Straight motor mounting

● Stepper motor size: □42

RoHS

How to order

EBS - 05 L E - 02 0300 N NN - A A N N

Ⓐ 05 Body width 54 mm

Ⓑ L None

Ⓒ E Straight mounting

Ⓓ 02 2 mm; 05 5 mm; 10 10 mm; 20 20 mm

Ⓔ 0050 to 0800 50 mm (In 50 mm increments) 800 mm

Ⓕ N None

Ⓖ A Select the mounted motor specification from the table at right.

Ⓗ A □42

Ⓘ N None; C Yes

Ⓙ N None; B Yes *1

Manufacturer	□42
Oriental Motor Co., Ltd.	A
MinebeaMitsumi Inc.	B
Dyadic Systems Co., Ltd.	B

*Refer to page 519 for the motor model No.

*1 Origin sensor and limit sensor are available as a set. As it is both-or-nothing, select "None" for both.

Specifications

Applicable motor sizes		□42 Stepper motor			
Drive method		Ball screw ø12			
Stroke length	mm	50 to 800			
Screw lead	mm	2	5	10	20
Max. load capacity *1	Horizontal kg	30	30	15	10
	Vertical kg	10	10	5	2.5
Max. speed	mm/s	100	250	500	1000
Rated thrust *1	N	854	341	170	85
Repeatability	mm	±0.01			
Lost motion	mm	0.1 or less			
Static allowable load	N	1168			
Static allowable moment	N·m	MP: 103, MY: 103, MR: 144			
Drive system weight	kg	0.7			
Other inertia	kg·cm²	0.09			
Coefficient of friction		0.03			
Mechanical efficiency		0.8			
Sliding resistance	N	6			
Ball screw length		Stroke + 200			
Operating ambient temperature, humidity		0 to 40°C (no freezing) 35 to 80% RH (no condensation)			
Storage ambient temperature, humidity		-10 to 50°C (no freezing) 35 to 80% RH (no condensation)			
Atmosphere		No corrosive gas, explosive gas, or dust			

*1 The rated thrust and max. load capacity values are the allowable values for the actuator body; the actual thrust and load capacity are limited by the motor used.

Stroke and max. speed

(mm/s)

Screw lead \ Stroke length	50 to 600	650	700	750	800
2	100	90	80	70	60
5	250	225	200	175	150
10	500	450	400	350	300
20	1000	900	800	700	600

*Max. speed is when the motor mounted by the customer can output rotation speed of 3000 rpm.
The max. speed is restricted by the stroke. Do not move at speeds beyond the limit.

Allowable overhang length

*Refer to page 540 for details.

Moment direction

MP MY MR

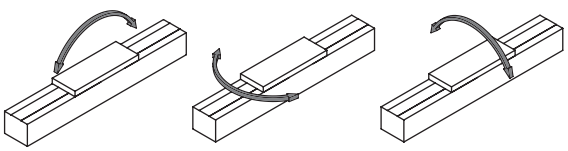

Dimensions Straight motor mounting

● EBS-05LE

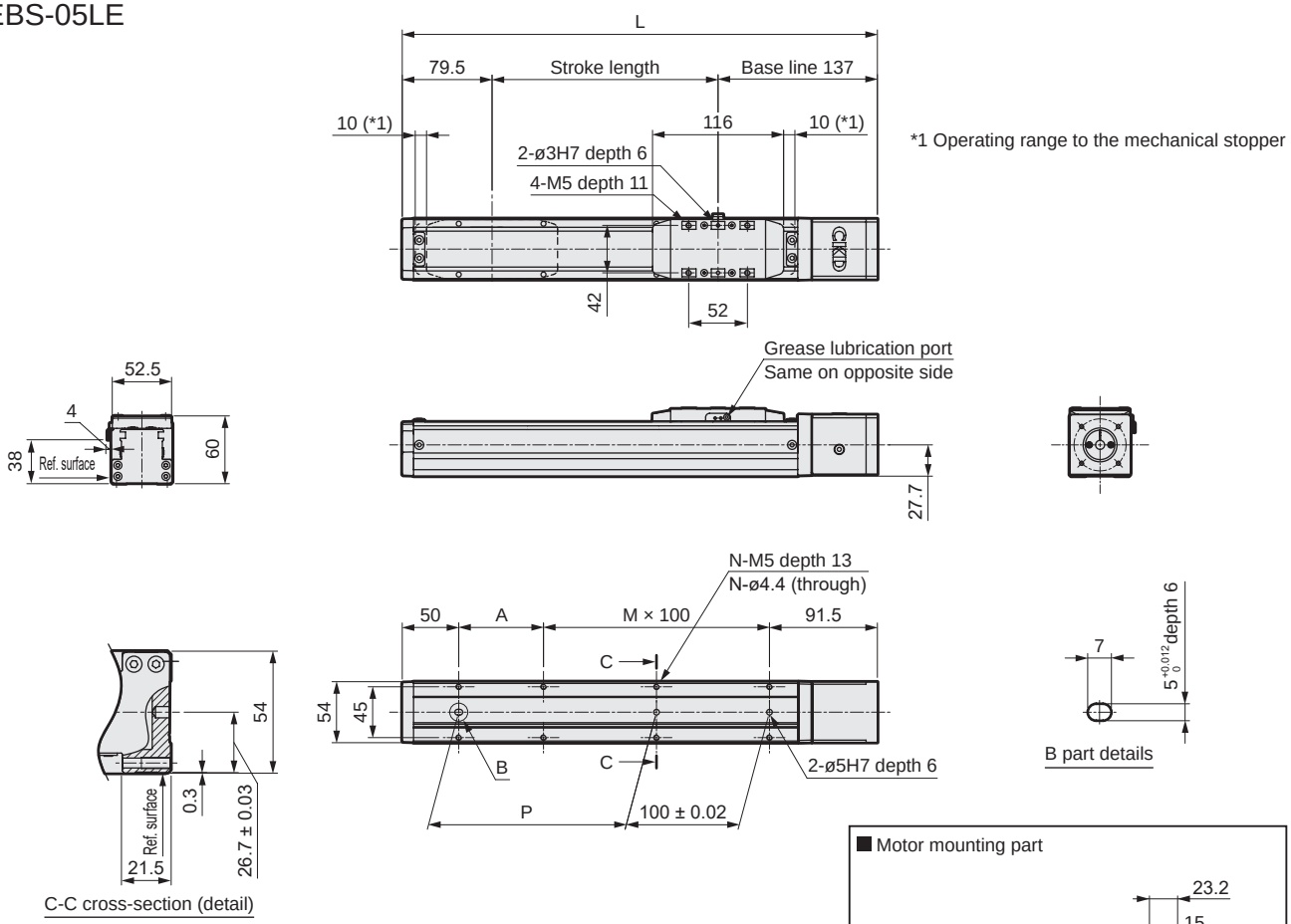

Mounted motor specification	D	E	F	Motor mounting bolt
A	3.5	31	6	4-M3 × L12
B	3.5	31	5	4-M3 × L12

Stroke code	0050	0100	0150	0200	0250	0300	0350	0400	0450	0500	0550	0600	0650	0700	0750	0800
Stroke length (mm)	50	100	150	200	250	300	350	400	450	500	550	600	650	700	750	800
L	266.5	316.5	366.5	416.5	466.5	516.5	566.5	616.5	666.5	716.5	766.5	816.5	866.5	916.5	966.5	1016.5
A	25	75	25	75	25	75	25	75	25	75	25	75	25	75	25	75
M	1	1	2	2	3	3	4	4	5	5	6	6	7	7	8	8
N	6	6	8	8	10	10	12	12	14	14	16	16	18	18	20	20
P	25	75	125	175	225	275	325	375	425	475	525	575	625	675	725	775
Weight (kg)	1.8	1.9	2.1	2.2	2.4	2.5	2.7	2.8	3.0	3.1	3.2	3.4	3.5	3.7	3.8	4.0

List of attachments

[Motor mounting parts]

Mounted motor specification	Coupling	Motor mounting bolt	
		Size	Quantity
A	Assembled at shipment	M3	4
B		M3	4

[Origin sensor, limit sensor]

Manufacturer	Model	Included quantity
OMRON Corporation	EE-SX674	3

*Refer to page 548 for sensor specifications.

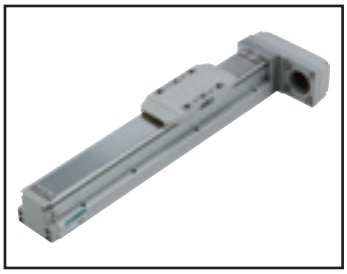

Electric actuator (motorless) Slider

EBS-05L*

Motor side mounting (left, right, bottom)

● Stepper motor size: □42

RoHS

How to order

EBS - 05 L R - 02 0300 N NN - A A N N

Ⓐ Body size

05	Body width 54 mm

Ⓑ Motor

L	None

Ⓒ Motor mounting direction

R	Right mounting
D	Bottom mounting
L	Left mounting

Ⓓ Screw lead

02	2 mm
05	5 mm
10	10 mm
20	20 mm

Ⓔ Stroke length

0050 to 0800	50 mm (In 50 mm increments) 800 mm

Ⓕ Brake

N	None

Ⓖ Mounted motor specification

A	Select the mounted motor specification from the table at right.
B	

Ⓗ Motor size

A	□42

Ⓘ Origin sensor *1

N	None
C	Yes

Ⓙ Limit sensor *1

N	None
B	Yes

Manufacturer	□42
Oriental Motor Co., Ltd.	A
MinebeaMitsumi Inc.	B
Dyadic Systems Co., Ltd.	B

*Refer to page 519 for the motor model No.

*1 Origin sensor and limit sensor are available as a set. As it is both-or-nothing, select "None" for both.

Specifications

Applicable motor sizes		□42 Stepper motor			
Drive method		Ball screw ø12			
Stroke length	mm	50 to 800			
Screw lead		2	5	10	20
Max. load capacity	kg Horizontal	30	30	15	10
	kg Vertical	10	10	5	2.5
Max. speed	mm/s	100	250	500	1000
Rated thrust *1	N	854	341	170	85
Repeatability	mm	±0.01			
Lost motion	mm	0.1 or less			
Static allowable load	N	1168			
Static allowable moment	N·m	MP: 103, MY: 103, MR: 144			
Drive system weight	kg	0.7			
Other inertia	kg·cm²	0.09			
Coefficient of friction		0.03			
Mechanical efficiency		0.8			
Sliding resistance	N	6			
Ball screw length		Stroke + 200			
Operating ambient temperature, humidity		0 to 40°C (no freezing) 35 to 80% RH (no condensation)			
Storage ambient temperature, humidity		-10 to 50°C (no freezing) 35 to 80% RH (no condensation)			
Atmosphere		No corrosive gas, explosive gas, or dust			

*1 The rated thrust and max. load capacity values are the allowable values for the actuator body; the actual thrust and load capacity are limited by the motor used.

Stroke and max. speed

(mm/s)

Lead \ Stroke length	50 to 600	650	700	750	800
2	100	90	80	70	60
5	250	225	200	175	150
10	500	450	400	350	300
20	1000	900	800	700	600

*Max. speed is when the motor mounted by the customer can output rotation speed of 3000 rpm.
The max. speed is restricted by the stroke. Do not move at speeds beyond the limit.

Allowable overhang length

*Refer to page 540 for details.

Moment direction

MP MY MR

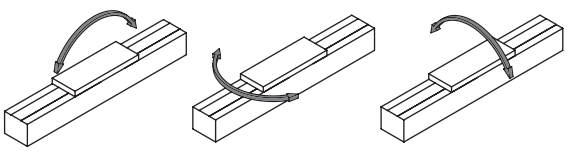

Dimensions Motor right-side mounting

● EBS-05LR

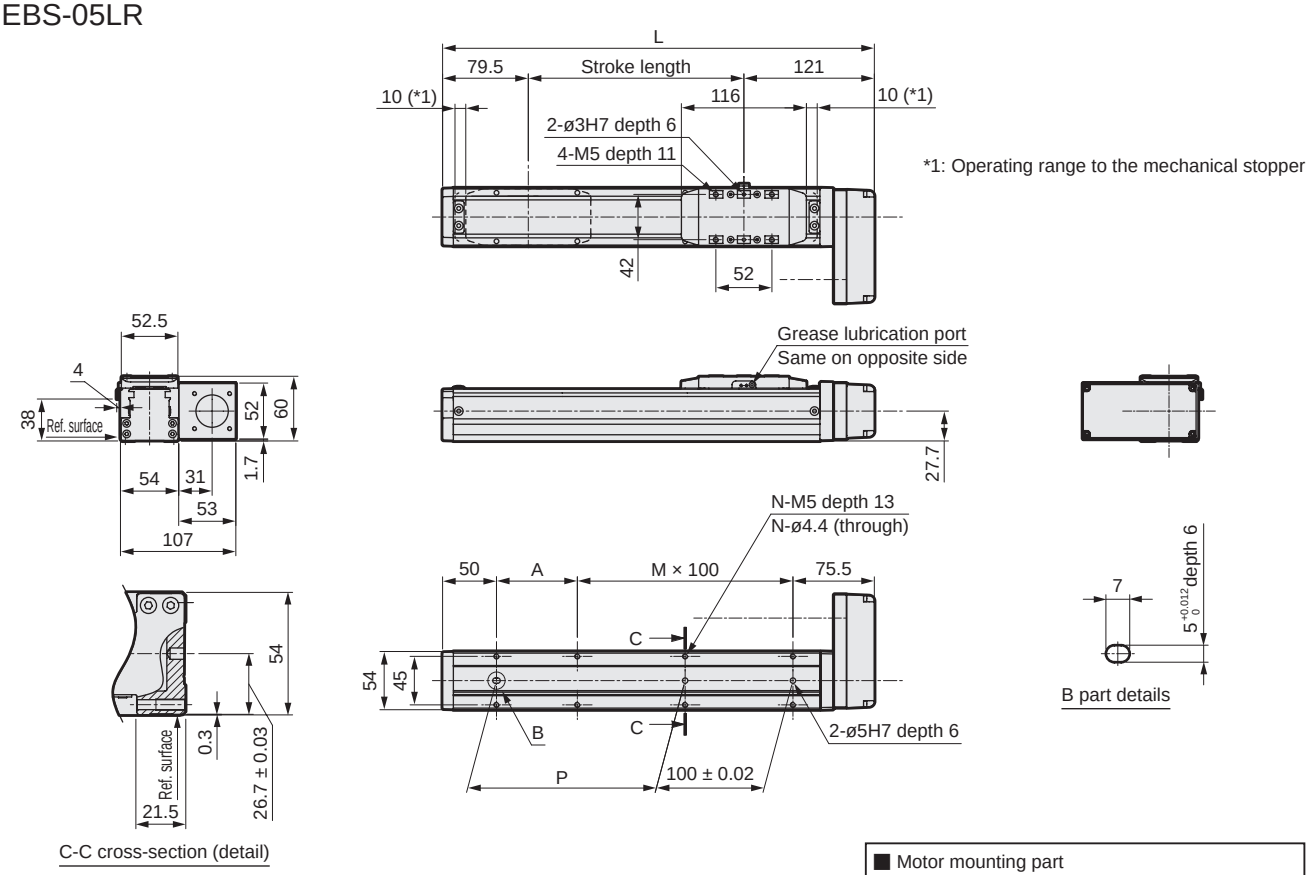

■ When origin/limit sensors are mounted

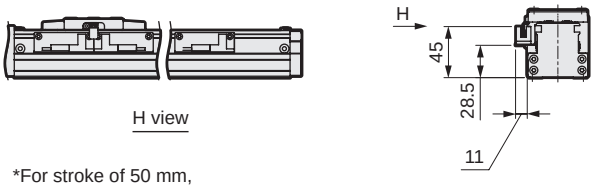

H view

*For stroke of 50 mm,
sensors must be mounted on both sides.
Sensor dogs are also mounted on both sides.

■ Motor mounting part

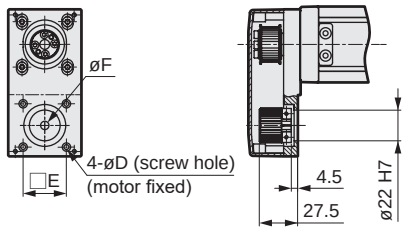

Mounted motor specification	D	E	F	Motor screw
A	3.5	31	6	4-M3 × L12
B	3.5	31	5	4-M3 × L12

Stroke code	0050	0100	0150	0200	0250	0300	0350	0400	0450	0500	0550	0600	0650	0700	0750	0800
Stroke length (mm)	50	100	150	200	250	300	350	400	450	500	550	600	650	700	750	800
L	250.5	300.5	350.5	400.5	450.5	500.5	550.5	600.5	650.5	700.5	750.5	800.5	850.5	900.5	950.5	1000.5
A	25	75	25	75	25	75	25	75	25	75	25	75	25	75	25	75
M	1	1	2	2	3	3	4	4	5	5	6	6	7	7	8	8
N	6	6	8	8	10	10	12	12	14	14	16	16	18	18	20	20
P	25	75	125	175	225	275	325	375	425	475	525	575	625	675	725	775
Weight (kg)	1.8	2.0	2.1	2.2	2.4	2.5	2.7	2.8	3.0	3.1	3.3	3.4	3.5	3.7	3.8	4.0

List of attachments

[Motor mounting]

Mounted motor specification	Timing belt, pulley	Motor mounting bolt	
		Size	Included quantity
A	Included at shipment	M3	4
B		M3	4

[When origin/limit sensors are selected]

Sensor		
Manufacturer	Model	Included quantity
OMRON Corporation	EE-SX674	3

*Refer to page 548 for sensor specifications.

Dimensions Motor bottom mounting

● EBS-05LD

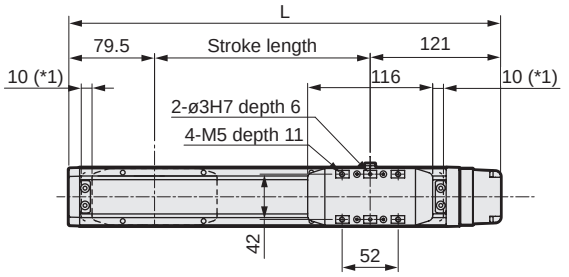

*1: Operating range to the mechanical stopper

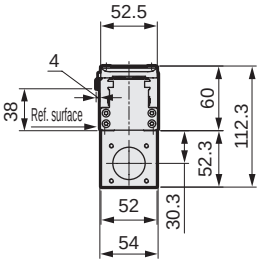

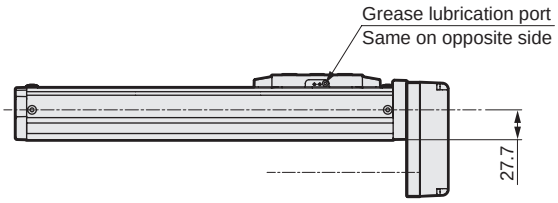

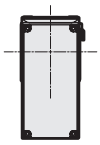

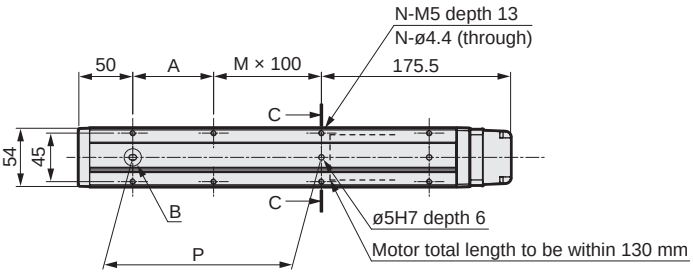

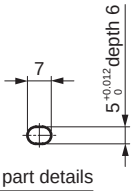

B part details

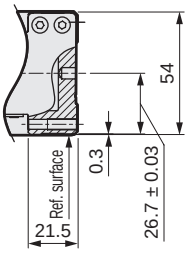

C-C cross-section (detail)

■ When origin/limit sensors are mounted

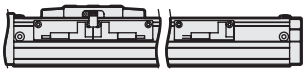

H view

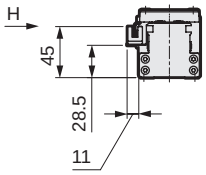

*For stroke of 50 mm,
sensors must be mounted on both sides.
Sensor dogs are also mounted on both sides.

■ Motor mounting part

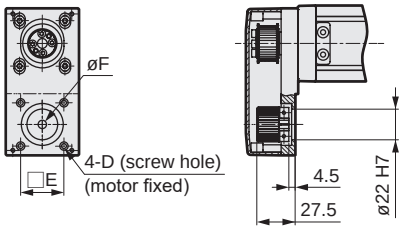

Mounted motor specification	D	E	F	Motor screw
A	3.5	31	6	4-M3 × L12
B	3.5	31	5	4-M3 × L12

Stroke code	0050	0100	0150	0200	0250	0300	0350	0400	0450	0500	0550	0600	0650	0700	0750	0800
Stroke length (mm)	50	100	150	200	250	300	350	400	450	500	550	600	650	700	750	800
L	250.5	300.5	350.5	400.5	450.5	500.5	550.5	600.5	650.5	700.5	750.5	800.5	850.5	900.5	950.5	1000.5
A	25	75	25	75	25	75	25	75	25	75	25	75	25	75	25	75
M	0	0	1	1	2	2	3	3	4	4	5	5	6	6	7	7
N	4	4	6	6	8	8	10	10	12	12	14	14	16	16	18	18
P	25	75	125	175	225	275	325	375	425	475	525	575	625	675	725	775
Weight (kg)	1.8	2.0	2.1	2.2	2.4	2.5	2.7	2.8	3.0	3.1	3.3	3.4	3.5	3.7	3.8	4.0

List of attachments

[Motor mounting]

Mounted motor specification	Timing belt, pulley	Motor mounting bolt	
		Size	Included quantity
A	Included at shipment	M3	4
B		M3	4

[When origin/limit sensors are selected]

Sensor		
Manufacturer	Model	Included quantity
OMRON Corporation	EE-SX674	3

*Refer to page 548 for sensor specifications.

Dimensions Motor left-side mounting

● EBS-05LL

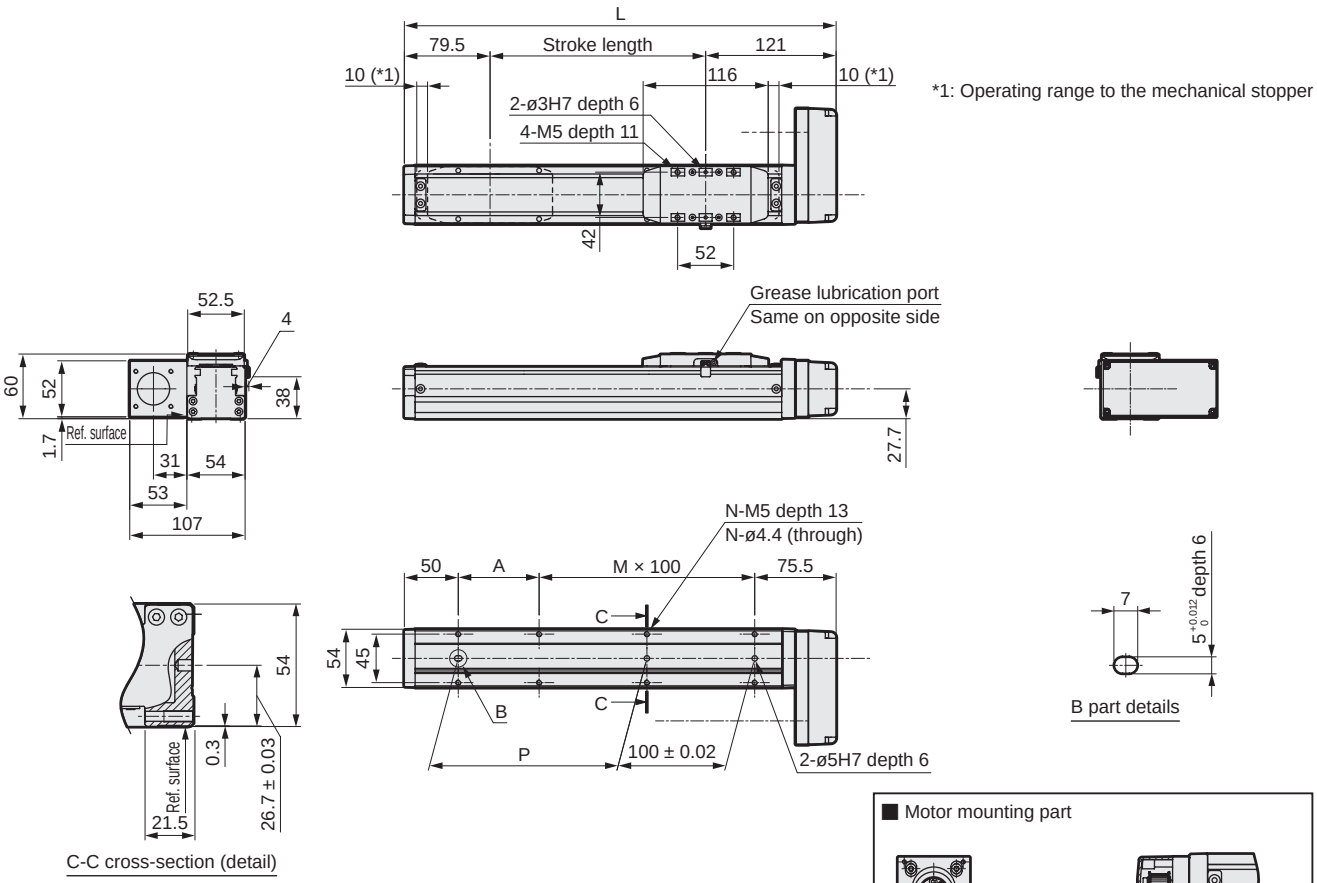

Mounted motor specification	D	E	F	Motor screw
A	3.5	31	6	4-M3 × L12
B	3.5	31	5	4-M3 × L12

Stroke code	0050	0100	0150	0200	0250	0300	0350	0400	0450	0500	0550	0600	0650	0700	0750	0800
Stroke length (mm)	50	100	150	200	250	300	350	400	450	500	550	600	650	700	750	800
L	250.5	300.5	350.5	400.5	450.5	500.5	550.5	600.5	650.5	700.5	750.5	800.5	850.5	900.5	950.5	1000.5
A	25	75	25	75	25	75	25	75	25	75	25	75	25	75	25	75
M	1	1	2	2	3	3	4	4	5	5	6	6	7	7	8	8
N	6	6	8	8	10	10	12	12	14	14	16	16	18	18	20	20
P	25	75	125	175	225	275	325	375	425	475	525	575	625	675	725	775
Weight (kg)	1.8	2.0	2.1	2.2	2.4	2.5	2.7	2.8	3.0	3.1	3.3	3.4	3.5	3.7	3.8	4.0

List of attachments

[Motor mounting]

Mounted motor specification	Timing belt, pulley	Motor mounting bolt	
		Size	Included quantity
A	Included at shipment	M3	4
B		M3	4

[When origin/limit sensors are selected]

Sensor		
Manufacturer	Model	Included quantity
OMRON Corporation	EE-SX674	3

*Refer to page 548 for sensor specifications.

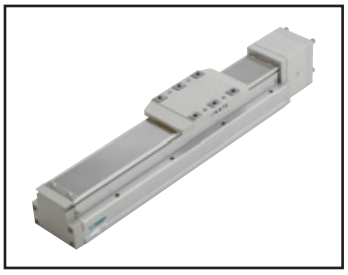

Electric actuator (motorless) Slider

EBS-08LE

Straight motor mounting

● Stepper motor size: □56, □60

RoHS

How to order

EBS - 08 L E - 05 0300 N NN - A B N N

Ⓐ 08 Body width 82 mm

Ⓑ L None

Ⓒ E Straight mounting

Ⓓ 05 5 mm; 10 10 mm; 20 20 mm

Ⓔ 0050 to 1100 50 mm (In 50 mm increments) 1100 mm

Ⓕ N None

Ⓖ A, B, C Select the mounted motor specification from the table at right.

Ⓗ B □56; C □60

Ⓘ N None; C Yes *1

Ⓙ N None; B Yes *1

Manufacturer	□56	□60
Oriental Motor Co., Ltd.	-	A
MinebeaMitsumi Inc.	B	-
Dyadic Systems Co., Ltd.	C	-

*Refer to page 519 for the motor model No.

*1 Origin sensor and limit sensor are available as a set. As it is both-or-nothing, select "None" for both.

Specifications

Applicable motor sizes		□56, □60 stepper motor		
Drive method		Ball screw ø16		
Stroke length	mm	50 to 1100		
Screw lead	mm	5	10	20
Max. load capacity *1	Horizontal kg	50	30	12
	Vertical kg	15	8	2.5
Max. speed	mm/s	250	500	1000
Rated thrust *1	N	683	341	174
Repeatability	mm	±0.01		
Lost motion	mm	0.1 or less		
Static allowable load	N	2781		
Static allowable moment	N·m	MP: 203, MY: 203, MR: 336		
Drive system weight	kg	1.6		
Other inertia	kg·cm²	0.24		
Coefficient of friction		0.03		
Mechanical efficiency		0.8		
Sliding resistance	N	20		
Ball screw length		Stroke + 200		
Operating ambient temperature, humidity		0 to 40°C (no freezing) 35 to 80% RH (no condensation)		
Storage ambient temperature, humidity		-10 to 50°C (no freezing) 35 to 80% RH (no condensation)		
Atmosphere		No corrosive gas, explosive gas, or dust		

*1 The rated thrust and max. load capacity values are the allowable values for the actuator body; the actual thrust and load capacity are limited by the motor used.

Stroke and max. speed

(mm/s)

Screw lead \ Stroke length	50 to 700	750	800	850	900	950	1000	1050	1100
5	250	225	200	175	150	125	100	75	50
10	500	450	400	350	300	250	200	150	100
20	1000	900	800	700	600	500	400	300	200

*Max. speed is when the motor mounted by the customer can output rotation speed of 3000 rpm.
The max. speed is restricted by the stroke. Do not move at speeds beyond the limit.

Allowable overhang length

*Refer to page 540 for details.

Moment direction

MP MY MR

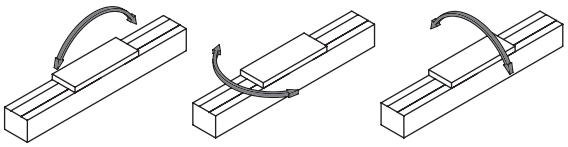

Dimensions Straight motor mounting

● EBS-08LE

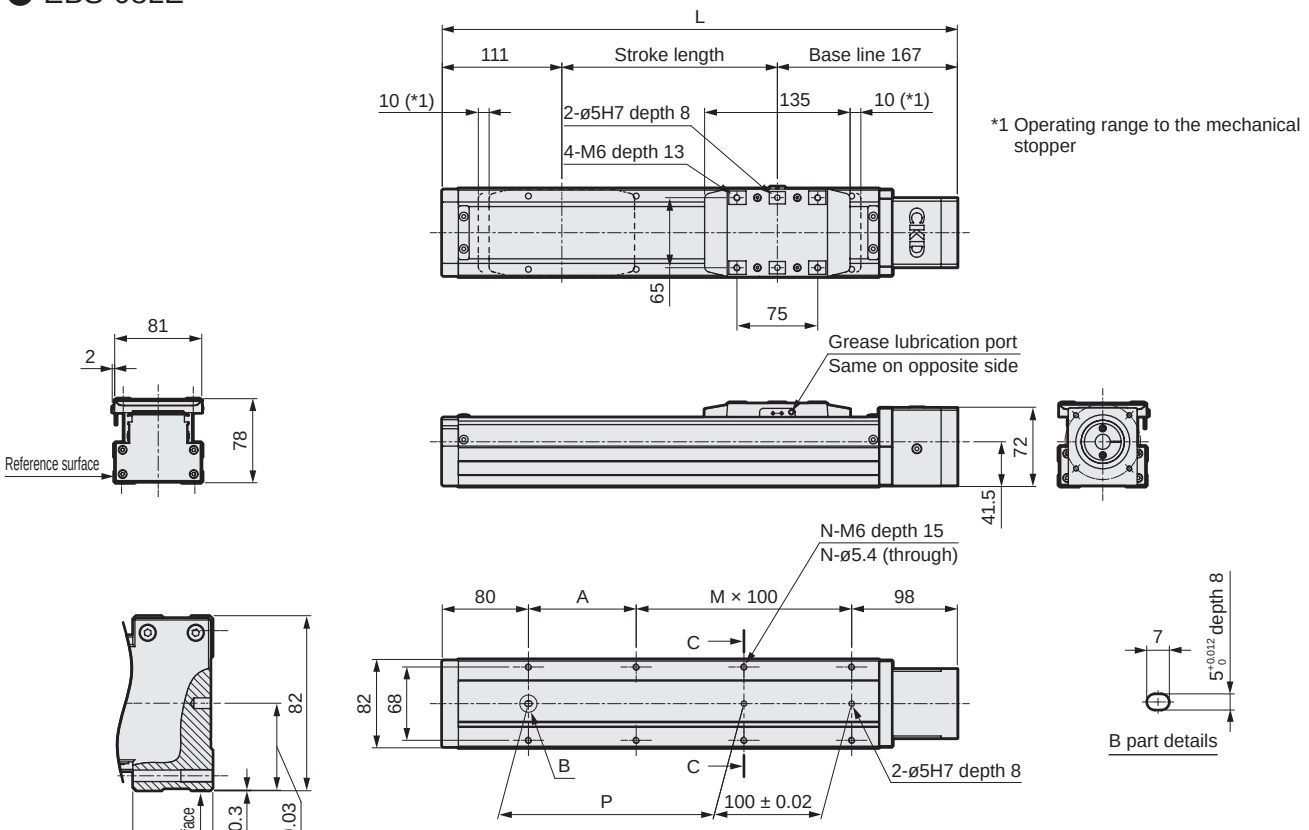

■ When origin/limit sensors are mounted

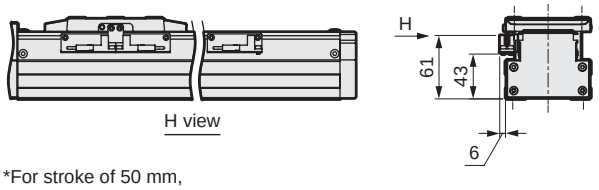

*For stroke of 50 mm,
sensors must be mounted on both sides.
Sensor dogs are also mounted on both sides.

■ Motor mounting part

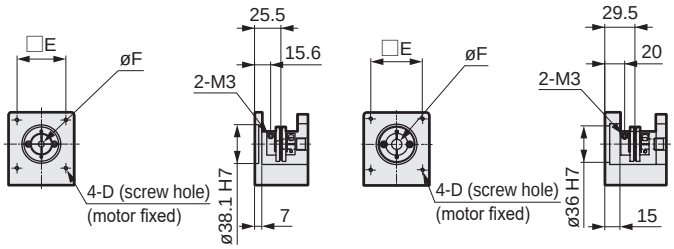

Mounted motor specification		D	E	F	Motor screw
A	□60	M4 depth 10	50	10	4-M4 × L16
B	□56	M4 depth 8	47.14	6.35	4-M4 × L12
C	□56	M4 depth 8	47.14	8	4-M4 × L12

Stroke code	0050	0100	0150	0200	0250	0300	0350	0400	0450	0500	0550	0600	0650	0700	0750	0800	0850	0900	0950	1000	1050	1100
Stroke length (mm)	50	100	150	200	250	300	350	400	450	500	550	600	650	700	750	800	850	900	950	1000	1050	1100
L	328	378	428	478	528	578	628	678	728	778	828	878	928	978	1028	1078	1128	1178	1228	1278	1328	1378
A	50	100	50	100	50	100	50	100	50	100	50	100	50	100	50	100	50	100	50	100	50	100
M	1	1	2	2	3	3	4	4	5	5	6	6	7	7	8	8	9	9	10	10	11	11
N	6	6	8	8	10	10	12	12	14	14	16	16	18	18	20	20	22	22	24	24	26	26
P	50	100	150	200	250	300	350	400	450	500	550	600	650	700	750	800	850	900	950	1000	1050	1100
Weight (kg)	4.3	4.6	4.9	5.2	5.6	5.9	6.2	6.6	6.9	7.2	7.5	7.9	8.2	8.5	8.8	9.2	9.5	9.8	10.2	10.5	10.8	11.1

List of attachments

[Motor mounting parts]

Mounted motor specification	Coupling	Motor mounting bolt	
		Size	Quantity
A	Assembled at shipment	M4	4
B		M4	4
C		M4	4

[Origin sensor, limit sensor]

Manufacturer	Model	Included quantity
OMRON Corporation	EE-SX674	3

*Refer to page 548 for sensor specifications.

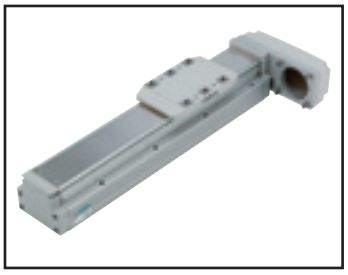

Electric actuator (motorless) Slider

EBS-08L*

Motor side mounting (left, right, bottom)

● Stepper motor size: □56, □60

RoHS

How to order

EBS - 08 L E - 05 0300 N NN - A B N N

Ⓐ 08 Body width 82 mm

Ⓑ L None

Ⓒ R Right mounting; D Bottom mounting; L Left mounting

Ⓓ 05 5 mm; 10 10 mm; 20 20 mm

Ⓔ 0050 to 1100 50 mm (In 50 mm increments) 1100 mm

Ⓕ N None

Ⓖ A Select the mounted motor specification from the table at right.

Ⓗ B □56; C □60

Ⓘ N None; C Yes *1

Ⓙ N None; B Yes *1

Manufacturer	□56	□60
Oriental Motor Co., Ltd.	-	A
MinebeaMitsumi Inc.	B	-
Dyadic Systems Co., Ltd.	C	-

*Refer to page 519 for the motor model No.

*1 Origin sensor and limit sensor are available as a set. As it is both-or-nothing, select "None" for both.

Specifications

Applicable motor sizes		□56, □60 stepper motor		
Drive method		Ball screw ø16		
Stroke length	mm	50 to 1100		
Screw lead		5	10	20
Max. load capacity	kg Horizontal	50	30	12
	kg Vertical	15	8	2.5
Max. speed	mm/s	250	500	1000
Rated thrust	N	683	341	174
Repeatability	mm	±0.01		
Lost motion	mm	0.1 or less		
Static allowable load	N	2781		
Static allowable moment	N·m	MP: 203, MY: 203, MR: 336		
Drive system weight	kg	1.6		
Other inertia	kg·cm^2	0.52		
Coefficient of friction		0.03		
Mechanical efficiency		0.8		
Sliding resistance	N	20		
Ball screw length		Stroke + 200		
Operating ambient temperature, humidity		0 to 40°C (no freezing) 35 to 80% RH (no condensation)		
Storage ambient temperature, humidity		-10 to 50°C (no freezing) 35 to 80% RH (no condensation)		
Atmosphere		No corrosive gas, explosive gas, or dust		

*1 The rated thrust and max. load capacity values are the allowable values for the actuator body; the actual thrust and load capacity are limited by the motor used.

Stroke and max. speed

(mm/s)

Lead \ Stroke length	50 to 700	750	800	850	900	950	1000	1050	1100
5	250	225	200	175	150	125	100	75	50
10	500	450	400	350	300	250	200	150	100
20	1000	900	800	700	600	500	400	300	200

*Max. speed is when the motor mounted by the customer can output rotation speed of 3000 rpm.
The max. speed is restricted by the stroke. Do not move at speeds beyond the limit.

Allowable overhang length

*Refer to page 540 for details.

Moment direction

MP MY MR

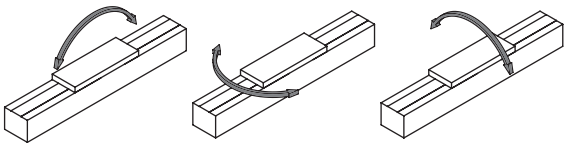

Dimensions Motor right-side mounting

● EBS-08LR

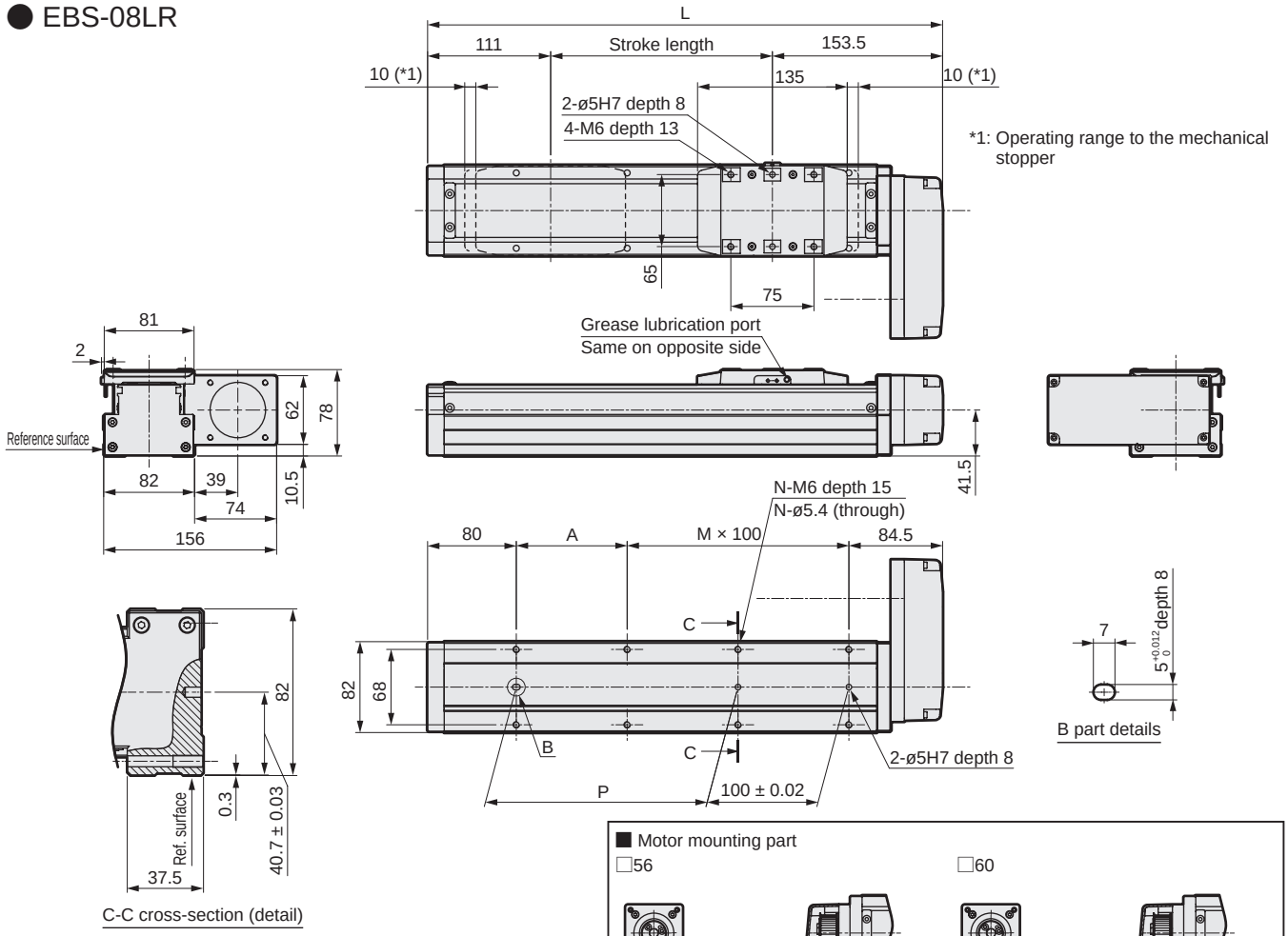

■ When origin/limit sensors are mounted

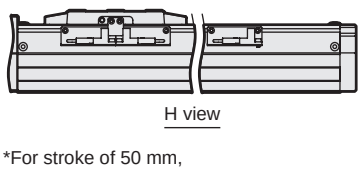

*For stroke of 50 mm,
sensors must be mounted on both sides.
Sensor dogs are also mounted on both sides.

■ Motor mounting part

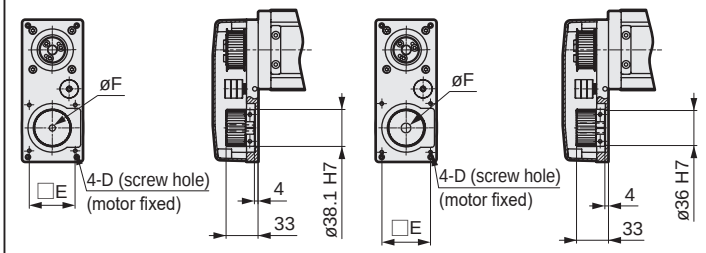

Mounted motor specification		D	E	F	Motor screw
A	□60	M4 depth 12	50	10	4-M4 × L16
B	□56	M4 depth 12	47.14	6.35	4-M4 × L16
C	□56	M4 depth 12	47.14	8	4-M4 × L16

Stroke code	0050	0100	0150	0200	0250	0300	0350	0400	0450	0500	0550	0600	0650	0700	0750	0800	0850	0900	0950	1000	1050	1100
Stroke length (mm)	50	100	150	200	250	300	350	400	450	500	550	600	650	700	750	800	850	900	950	1000	1050	1100
L	314.5	364.5	414.5	464.5	514.5	564.5	614.5	664.5	714.5	764.5	814.5	864.5	914.5	964.5	1014.5	1064.5	1114.5	1164.5	1214.5	1264.5	1314.5	1364.5
A	50	100	50	100	50	100	50	100	50	100	50	100	50	100	50	100	50	100	50	100	50	100
M	1	1	2	2	3	3	4	4	5	5	6	6	7	7	8	8	9	9	10	10	11	11
N	6	6	8	8	10	10	12	12	14	14	16	16	18	18	20	20	22	22	24	24	26	26
P	50	100	150	200	250	300	350	400	450	500	550	600	650	700	750	800	850	900	950	1000	1050	1100
Weight (kg)	4.5	4.8	5.1	5.4	5.8	6.1	6.4	6.8	7.1	7.4	7.7	8.1	8.4	8.7	9.0	9.4	9.7	10.0	10.4	10.7	11.0	11.3

List of attachments

[Motor mounting]

Mounted motor specification	Timing belt, pulley	Motor mounting bolt	
		Size	Included quantity
A	Included at shipment	M4	4
B		M4	4
C		M4	4

[When origin/limit sensors are selected]

Sensor		
Manufacturer	Model	Included quantity
OMRON Corporation	EE-SX674	3

*Refer to page 548 for sensor specifications.

Dimensions Motor bottom mounting

● EBS-08LD

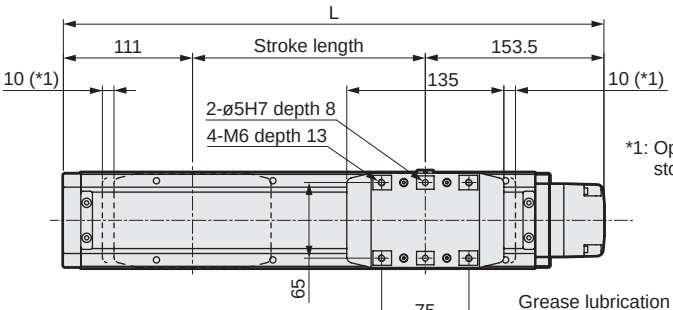

*1: Operating range to the mechanical stopper

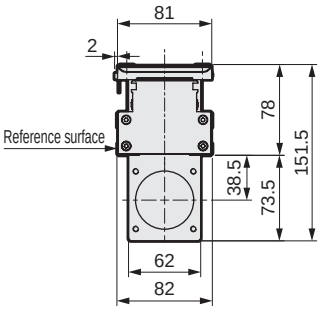

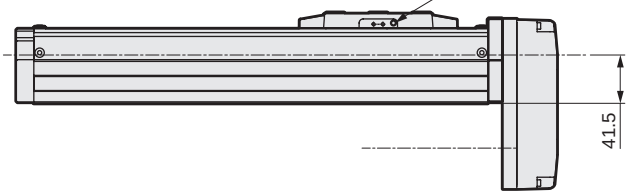

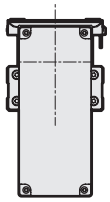

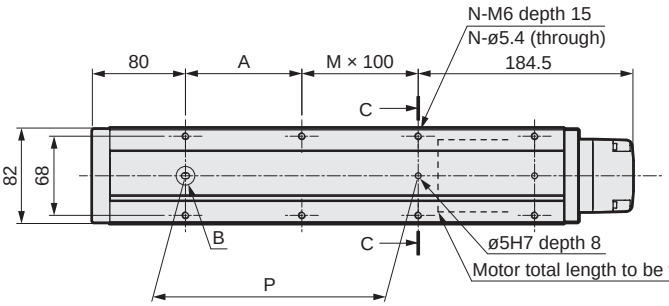

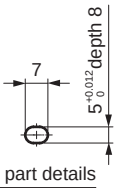

B part details

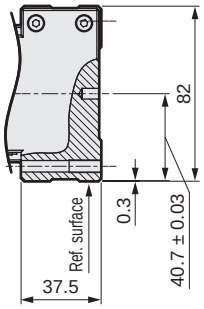

C-C cross-section (detail)

■ When origin/limit sensors are mounted

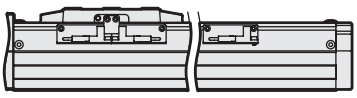

H view

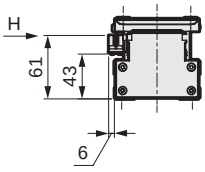

*For stroke of 50 mm,
sensors must be mounted on both sides.
Sensor dogs are also mounted on both sides.

■ Motor mounting part

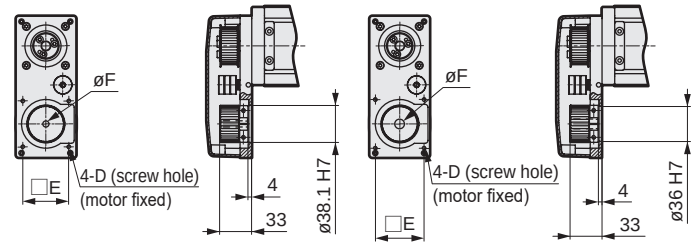

Mounted motor specification		D	E	F	Motor screw
A	□60	M4 depth 12	50	10	4-M4 × L16
B	□56	M4 depth 12	47.14	6.35	4-M4 × L16
C	□56	M4 depth 12	47.14	8	4-M4 × L16

Stroke code	0050	0100	0150	0200	0250	0300	0350	0400	0450	0500	0550	0600	0650	0700	0750	0800	0850	0900	0950	1000	1050	1100
Stroke length (mm)	50	100	150	200	250	300	350	400	450	500	550	600	650	700	750	800	850	900	950	1000	1050	1100
L	314.5	364.5	414.5	464.5	514.5	564.5	614.5	664.5	714.5	764.5	814.5	864.5	914.5	964.5	1014.5	1064.5	1114.5	1164.5	1214.5	1264.5	1314.5	1364.5
A	50	100	50	100	50	100	50	100	50	100	50	100	50	100	50	100	50	100	50	100	50	100
M	0	0	1	1	2	2	3	3	4	4	5	5	6	6	7	7	8	8	9	9	10	10
N	4	4	6	6	8	8	10	10	12	12	14	14	16	16	18	18	20	20	22	22	24	24
P	50	100	150	200	250	300	350	400	450	500	550	600	650	700	750	800	850	900	950	1000	1050	1100
Weight (kg)	4.5	4.8	5.1	5.4	5.8	6.1	6.4	6.8	7.1	7.4	7.7	8.1	8.4	8.7	9.0	9.4	9.7	10.0	10.4	10.7	11.0	11.3

List of attachments

[Motor mounting]

Mounted motor specification	Timing belt, pulley	Motor mounting bolt	
		Size	Included quantity
A	Included at shipment	M4	4
B		M4	4
C		M4	4

[When origin/limit sensors are selected]

Sensor		
Manufacturer	Model	Included quantity
OMRON Corporation	EE-SX674	3

*Refer to page 548 for sensor specifications.

Dimensions Motor left-side mounting

● EBS-08LL

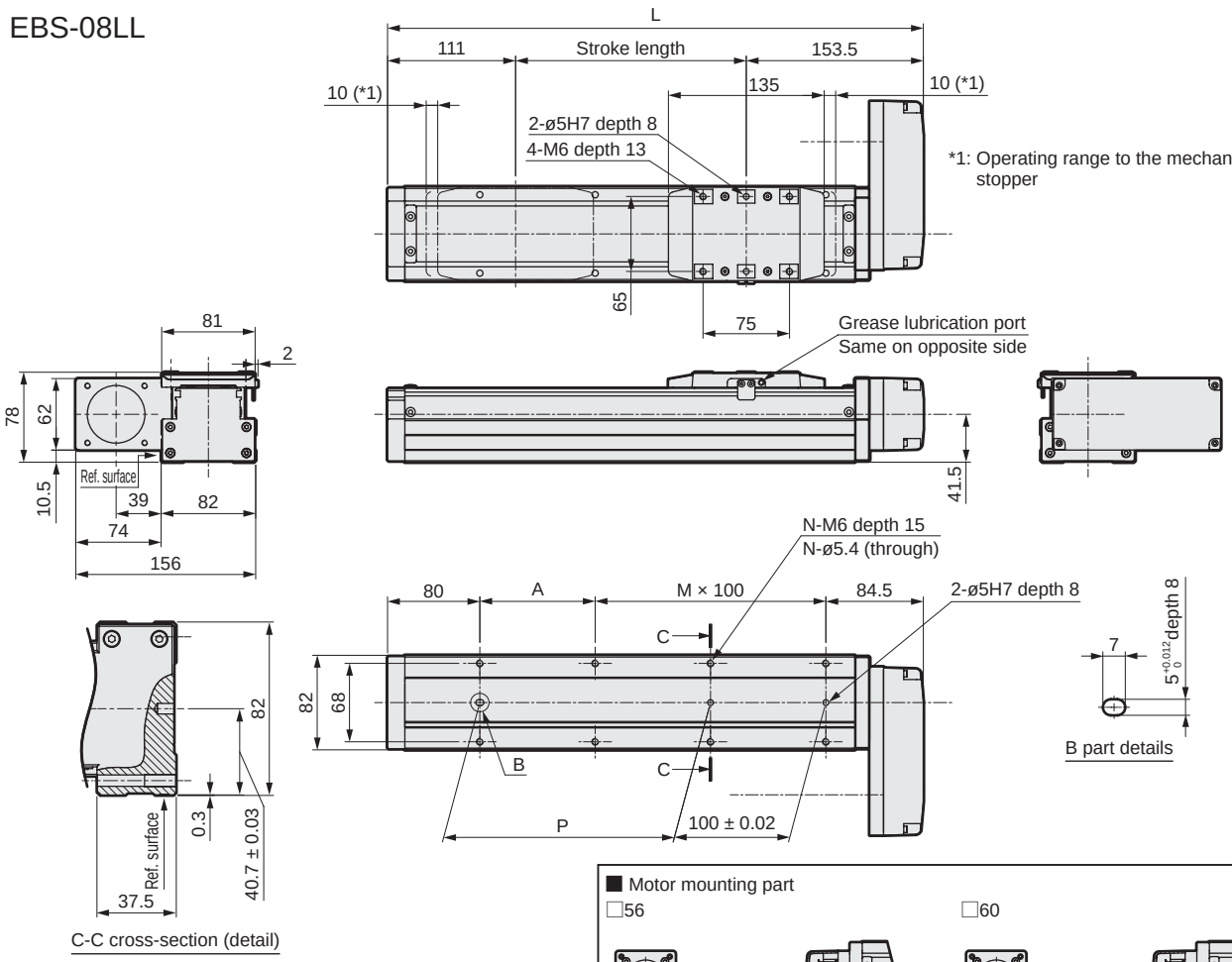

■ When origin/limit sensors are mounted

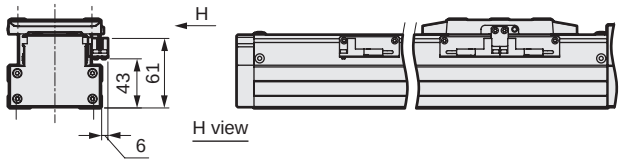

*For stroke of 50 mm,
sensors must be mounted on both sides.
Sensor dogs are also mounted on both sides.

■ Motor mounting part

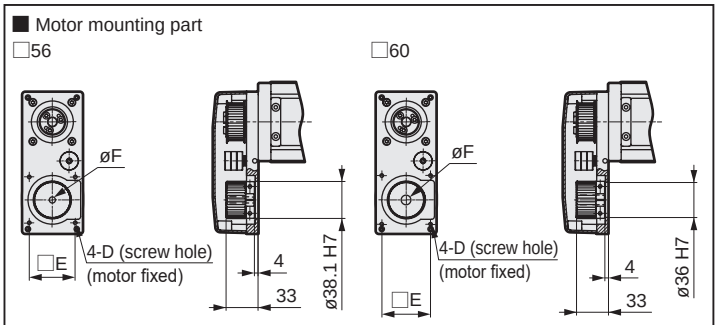

Mounted motor specification		D	E	F	Motor screw
A	□60	M4 depth 12	50	10	4-M4 × L16
B	□56	M4 depth 12	47.14	6.35	4-M4 × L16
C	□56	M4 depth 12	47.14	8	4-M4 × L16

Stroke code	0050	0100	0150	0200	0250	0300	0350	0400	0450	0500	0550	0600	0650	0700	0750	0800	0850	0900	0950	1000	1050	1100
Stroke length (mm)	50	100	150	200	250	300	350	400	450	500	550	600	650	700	750	800	850	900	950	1000	1050	1100
L	314.5	364.5	414.5	464.5	514.5	564.5	614.5	664.5	714.5	764.5	814.5	864.5	914.5	964.5	1014.5	1064.5	1114.5	1164.5	1214.5	1264.5	1314.5	1364.5
A	50	100	50	100	50	100	50	100	50	100	50	100	50	100	50	100	50	100	50	100	50	100
M	1	1	2	2	3	3	4	4	5	5	6	6	7	7	8	8	9	9	10	10	11	11
N	6	6	8	8	10	10	12	12	14	14	16	16	18	18	20	20	22	22	24	24	26	26
P	50	100	150	200	250	300	350	400	450	500	550	600	650	700	750	800	850	900	950	1000	1050	1100
Weight (kg)	4.5	4.8	5.1	5.4	5.8	6.1	6.4	6.8	7.1	7.4	7.7	8.1	8.4	8.7	9.0	9.4	9.7	10.0	10.4	10.7	11.0	11.3

List of attachments

[Motor mounting]

Mounted motor specification	Timing belt, pulley	Motor mounting bolt	
		Size	Included quantity
A	Included at shipment	M4	4
B		M4	4
C		M4	4

[When origin/limit sensors are selected]

Sensor		
Manufacturer	Model	Included quantity
OMRON Corporation	EE-SX674	3

*Refer to page 548 for sensor specifications.

Model selection

STEP 1 Confirming load capacity

Load capacity varies with mounting orientation, screw lead and motor performance.
Refer to the Series Variation (page 518) and the specification table for each model to select the size and screw lead.
For motor performance, contact the motor manufacturer. For motor selection, use the actuator information (mechanical efficiency, etc.) in the specifications.

STEP 2 Confirming positioning time

Calculate the confirmation of the positioning time with the selected product according to the following example and confirm that the required tact is achievable.
Select the speed and acceleration/deceleration from the specification table for each model and the motor selected by the customer.

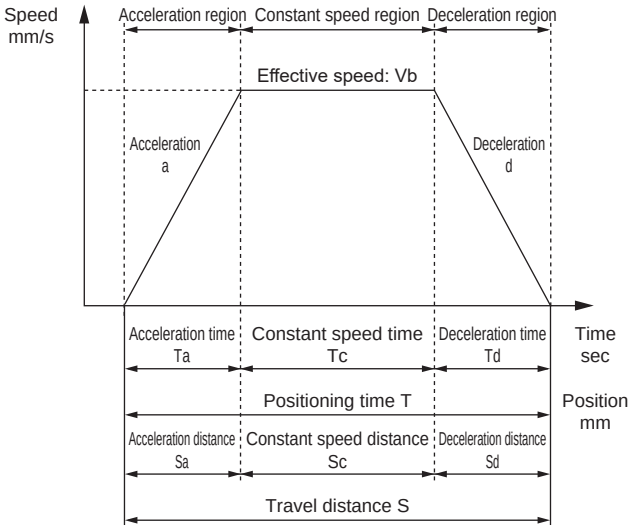

	Description	Code	Unit	Remarks
Set value	Set speed	V	mm/s	
	Set acceleration	a	mm/s^2	
	Set deceleration	d	mm/s^2	
	Travel distance	S	mm	
Calculated value	Achieved speed	Vmax	mm/s	$= \{2 \times a \times d \times S/(a + d)\}^{1/2}$
	Effective speed	Vb	mm/s	Smaller of V and Vmax
	Acceleration time	Ta	s	= Vb/a
	Deceleration time	Td	s	= Vb/d
	Constant speed time	Tc	s	= Sc/Vb
	Acceleration distance	Sa	mm	$= (a \times Ta^2)/2$
	Deceleration distance	Sd	mm	$= (d \times Td^2)/2$
	Constant speed distance	Sc	mm	= S - (Sa + Sd)
	Positioning time	T	s	= Ta + Tc + Td

*Do not use at speeds that exceed the specifications.
*Depending on acceleration/deceleration and stroke length, the trapezoid speed waveform may not be formed (the set speed may not be achieved). In this case, select the effective speed (Vb) from the set speed (V) and the achieved speed (Vmax), whichever is smaller.
*Use at acceleration and deceleration of 1 G or less for horizontal use and 0.5 G or less for vertical use.
*While settling time depends on working conditions, it may take 0.2 seconds or so.
*1 G ≈ 9.8 m/s^2.
*Set the speed and acceleration/deceleration by the motor selected by the customer. For motor selection and calculation of speed and acceleration/deceleration, use the actuator information (mechanical efficiency, etc.) in the specifications.

STEP 3 Confirming allowable overhang length

Make sure that the load overhang length during operation is within the allowable range (pages 540 to 545).

Contact CKD for selection details.

MEMO

Allowable overhang length (EBS Series)

[When installed horizontally]

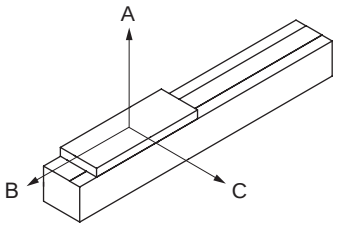

[Allowable overhang length]

● EBS-04

Motor mounted	Acceleration/deceleration G	Screw lead	Weight kg	Overhang mm A	B	C
Straight / side/bottom	0.3	6	5	800	160	225
			10	570	70	100
			20	250	30	40
		12	4	800	180	210
			8	380	80	100
			12	230	50	60
	0.5	6	5	800	160	220
			10	400	70	100
			15	240	40	60
		12	4	580	180	200
			8	260	80	90
			12	150	50	50
	1	6	5	520	160	210
			10	240	70	90
			15	140	40	50
		12	4	350	180	180
			8	150	80	80
			12	80	50	40

*The above values are the allowable values for the actuator body; the actual load capacity is limited by the motor used.
*Values are when the actuator operating life is 5,000km. (Screw lead: 2 mm is the value when the operating life is 1,000km.)
*The overhang direction is for a single-direction load.
*Dimensions A, B, and C are measured from the center of the table top.
*Values are at stroke: 350 mm and motor rotation speed: 3,000 rpm.

● EBS-05

Motor mounted	Acceleration/deceleration G	Screw lead	Weight kg	Overhang mm A	B	C
Straight / side/bottom	0.3	2	10	1000	160	225
			20	1000	75	105
			30	815	45	65
		5	10	1000	125	170
			20	500	55	75
			30	305	35	45
		10	5	1000	235	285
			10	580	110	135
			15	360	70	80
		20	2.5	1000	400	385
			5	615	195	180
			10	265	90	75
	0.5	2	10	1000	160	225
			20	890	75	105
			30	570	45	65
		5	10	765	125	165
			20	345	55	75
			30	205	35	45
		10	5	875	235	280
			10	405	110	125
			15	245	70	75
		20	2.5	925	400	365
			5	425	195	165
			10	180	90	70
	1	2	10	1000	160	220
			20	545	75	100
			30	340	45	60
		5	10	465	125	160
			20	200	55	70
			30	115	35	40
		10	5	535	235	255
			10	240	110	115
			15	140	70	65
		20	2.5	565	400	315
			5	250	190	140
			10	95	85	55

Allowable overhang length (EBS Series)

● EBS-08

Motor mounted	Acceleration/deceleration G	Screw lead	Weight kg	Overhang mm		
				A	B	C
Straight / side/bottom	0.3	5	10	1000	400	620
			25	1000	150	235
			50	560	65	105
		10	10	1000	360	480
			20	840	170	230
			30	530	110	140
		20	2.5	1000	1000	1000
			5	1000	610	670
			10	950	295	315
	0.5	5	10	1000	400	620
			25	920	150	235
			50	420	65	105
		10	10	1000	360	480
			20	625	170	225
			30	390	110	140
		20	2.5	1000	1000	1000
			5	1000	610	620
			10	670	295	290
	1	5	10	1000	400	600
			25	565	150	220
			50	250	65	95
		10	10	820	360	435
			20	380	170	200
			30	230	110	120
		20	2.5	1000	1000	1000
			5	870	610	520
			10	400	295	240

Allowable overhang length (EBS Series)

[When wall-mounted]

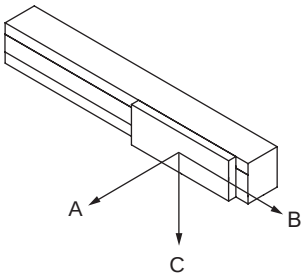

[Allowable overhang length]

● EBS-04

Motor mounted	Acceleration/deceleration G	Screw lead	Weight kg	Overhang mm A	B	C
Straight / side/bottom	0.3	6	5	180	130	800
			10	65	40	470
			15	25	20	240
		12	4	180	150	730
			8	60	50	280
			12	25	20	130
	0.5	6	5	180	130	800
			10	60	40	330
			15	25	20	170
		12	4	170	140	520
			8	60	50	200
			12	25	20	90
	1	6	5	170	130	490
			10	60	40	200
			15	25	20	100
		12	4	150	140	320
			8	50	50	120
			12	20	20	50

*The above values are the allowable values for the actuator body; the actual load capacity is limited by the motor used.
*Values are when the actuator operating life is 5,000km. (Screw lead: 2 mm is the value when the operating life is 1,000km.)
*The overhang direction is for a single-direction load.
*Dimensions A, B, and C are measured from the center of the table top.
*Values are at stroke: 350 mm and motor rotation speed: 3,000 rpm.

● EBS-05

Motor mounted	Acceleration/deceleration G	Screw lead	Weight kg	Overhang mm A	B	C
Straight / side/bottom	0.3	2	10	175	125	1000
			20	55	40	1000
			30	15	10	540
		5	5	310	230	1000
			10	125	90	965
			20	30	20	335
		10	5	245	200	1000
			10	90	75	460
			15	40	30	230
		20	2.5	350	355	1000
			5	145	145	500
			10	45	45	150
	0.5	2	10	175	125	1000
			20	55	40	775
			30	15	10	385
		5	5	310	230	1000
			10	120	90	685
			20	30	20	240
		10	5	240	200	805
			10	90	75	330
			15	40	30	160
		20	2.5	330	355	855
			5	135	145	355
			10	40	40	105
	1	2	10	175	125	1000
			20	55	40	480
			30	15	10	235
		5	5	300	230	955
			10	120	90	425
			20	30	20	145
		10	5	220	200	500
			10	80	75	200
			15	35	30	95
		20	2.5	290	355	530
			5	115	145	220
			10	30	40	60

Allowable overhang length (EBS Series)

● EBS-08

Motor mounted	Acceleration/deceleration G	Screw lead	Weight kg	Overhang mm		
				A	B	C
Straight / side/bottom	0.3	5	10	580	370	1000
			25	185	120	1000
			50	55	35	465
		10	10	450	325	1000
			20	190	135	795
			30	100	75	455
		20	2.5	1000	1000	1000
			5	630	565	1000
			10	280	250	850
	0.5	5	10	580	370	1000
			25	185	120	855
			50	55	35	330
		10	10	445	325	1000
			20	185	135	565
			30	100	75	325
		20	2.5	1000	1000	1000
			5	585	565	1000
			10	260	250	605
	1	5	10	555	370	1000
			25	180	120	530
			50	50	35	200
		10	10	405	325	800
			20	165	135	350
			30	90	70	195
		20	2.5	1000	1000	1000
			5	500	560	845
			10	220	250	370

Allowable overhang length (EBS Series)

[When installed vertically]

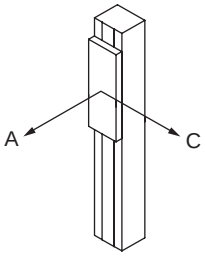

[Allowable overhang length]

● EBS-04

Motor mounted	Acceleration/deceleration G	Screw lead	Weight kg	Overhang mm A	B	C
Straight / side/bottom	0.3	6	1	800	-	780
			3	240	-	230
			5	120	-	120
		12	1	690	-	630
			1.5	440	-	410
			2	320	-	300
	0.5	6	1	800	-	780
			3	240	-	230
			5	120	-	120
		12	1	680	-	620
			1.5	400	-	440
			2	320	-	290

*The above values are the allowable values for the actuator body; the actual load capacity is limited by the motor used.
*Values are when the actuator operating life is 5,000km. (Screw lead: 2 mm is the value when the operating life is 1,000km.)
*The overhang direction is for a single-direction load.
*Dimensions A, B, and C are measured from the center of the table top.
*Values are at stroke: 350 mm and motor rotation speed: 3,000 rpm.

● EBS-05

Motor mounted	Acceleration/deceleration G	Screw lead	Weight kg	Overhang mm A	C
Straight / side/bottom	0.3	2	2.5	640	640
			5	295	295
			10	120	120
		5	2.5	500	490
			5	225	225
			10	85	85
		10	1	1000	1000
			2.5	435	410
			5	195	180
		20	0.5	1000	1000
			1	910	760
			2.5	335	280
	0.5	2	2.5	640	640
			5	295	295
			10	120	120
		5	2.5	500	500
			5	225	225
			10	85	85
		10	1	1000	1000
			2.5	430	410
			5	190	180
		20	0.5	1000	1000
			1	870	740
			2.5	315	275

Allowable overhang length (EBS Series)

[When installed vertically]

● EBS-08

Motor mounted	Acceleration/deceleration G	Screw lead	Weight kg	Overhang mm	
				A	C
Straight / side/bottom	0.3	5	5	775	760
			10	360	350
			15	220	220
		10	3	1000	1000
			5	680	630
			8	405	375
		20	0.5	1000	1000
			1	1000	1000
			2.5	1000	930
	0.5	5	5	775	760
			10	360	350
			15	220	220
		10	3	1000	1000
			5	670	630
			8	400	375
		20	0.5	1000	1000
			1	1000	1000
			2.5	1000	890

Slider parallelism (EBS Series) *Reference value

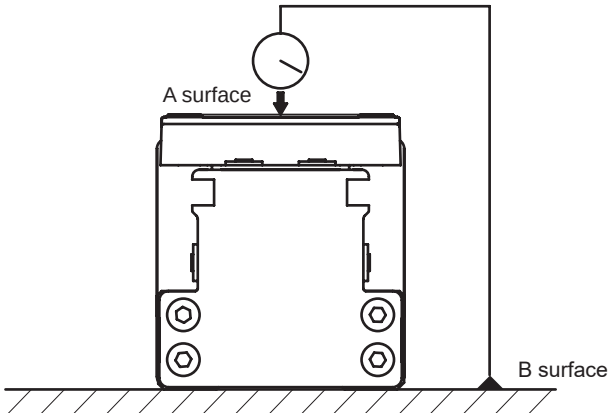

(mm)

	Parallelism
	A surface against B surface
EBS-04 Series	0.03
EBS-05 Series	
EBS-08 Series	

*Parallelism with the product fixed to a surface plate.

Table deflection (EBS Series) *Reference value

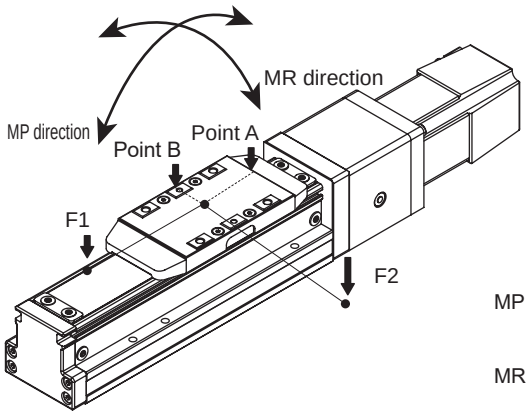

MP direction: Displacement at the table end (Point A) when load (F1) is applied to a position 100 mm from the center of the table

MR direction: Displacement at the table end (Point B) when load (F2) is applied to a position 100 mm from the center of the table

Displacement in MP direction

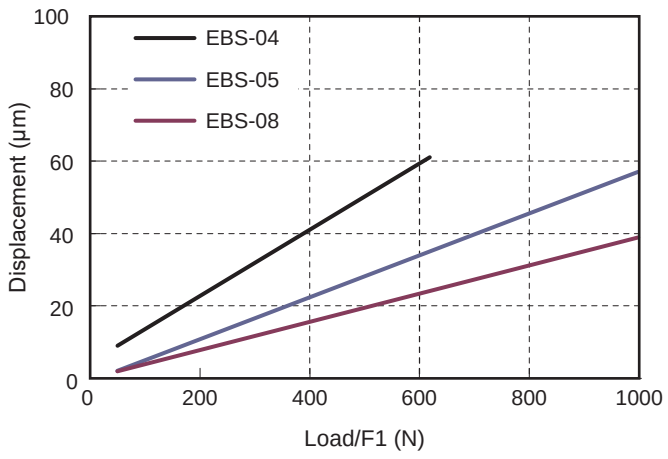

Displacement in MR direction

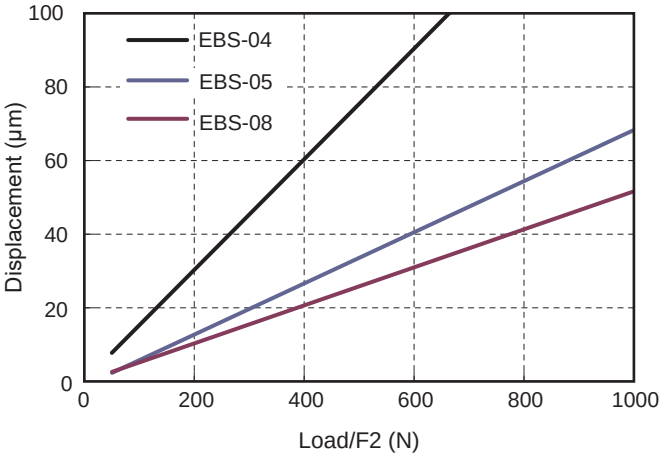

List of attachments

Motor mounting bolt (common motor mounting direction)

Model No.	Mounted motor specification	Motor size	Size	Quantity
EBS-04	A	□42	M3	4
	B		M3	4
EBS-05	A	□42	M3	4
	B		M3	4
EBS-08	A	□56 □60	M4	4
	B		M4	4
	C		M4	4

Coupling

Model No.	Part name	Quantity
LE (Motor mounting direction: Straight)	Coupling (Assembled at shipment)	1

Timing belt, pulley (motor side)

Model No.	Shipping format	Quantity
L* (Motor mounting on side/bottom)	Included at shipment *1	1 each

*1 The body side pulley is assembled.

Sensor mounting plate

Model No.	Shipping format	Quantity
For both with and without sensor	Included at shipment *1	3

*1 Screws for mounting plate are also included.
Sensor dogs are assembled onto all products.

Origin sensor, limit sensor

Model No.	Shipping format	Quantity
When "with" sensor is selected	Included at shipment *2	3 *3

*2 Sensor mounting screws are also included.
*3 When "None" is selected for origin sensor or limit sensor, the other sensor is also "None".

Origin sensor, limit sensor

[Specifications]

Item		Specifications
Manufacturer	Manufacturer	OMRON Corporation
	Model	EE-SX674
Hysteresis		0.025 mm or less
Light source (peak emission wavelength)		GaAs infrared LED (940 nm)
Indicator lamp		ON when receiving light (red)
Power supply voltage		5 to 24 VDC ±10% ripple (P-P) 10% or less
Current consumption		12 mA or less (with L terminal open)
Control output	Type	NPN (NPN open collector)
	Output	5 to 24 VDC 100 mA or less
	Current when OFF	0.5 mA or less
	Residual voltage	0.8 V or less (with 100 mA load current)
		0.4 V or less (with 40 mA load current)
Operating ambient illumination		Light-receiving surface luminance Fluorescent light: 1,000 lx or less
Ambient temperature range	Operating	-25 to +55°C, no condensation or freezing
	In storage	-30 to +80°C, no condensation or freezing
Ambient humidity range	Operating	5 to 85% RH, no condensation or freezing
	In storage	5 to 95% RH, no condensation or freezing
Degree of protection		IP50 IEC 60529 Standards
Cord length		2 m (Connector with cord [EE-1006 2M])

Output circuit

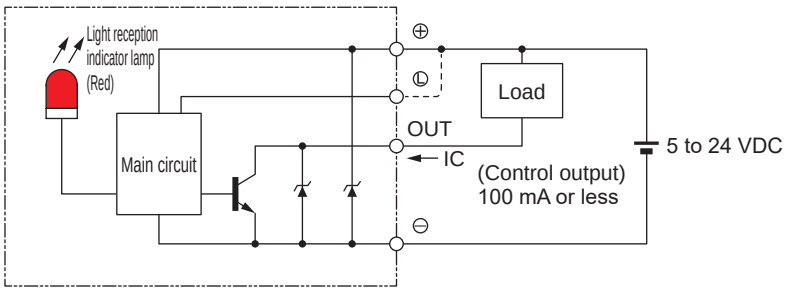

Wiring diagram

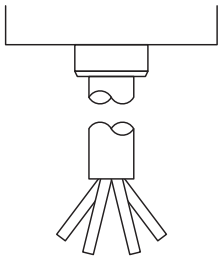

Terminal layout

Brown	5 to 24 VDC
Pink	L
Blue	0 V
Black	OUTPUT

Maintenance parts

Maintenance parts (origin sensor, limit sensor)

Model No. 	Compatibility	Part
EBS-SENSOR-N-KIT	All EBS models	Body, cable, mounting plate (1 each) *1

*1 Mounting plate screws and sensor mounting screws are also included.

Maintenance parts (grease nozzle)

Model No. 	Compatibility
EBS-NOZZLE	All models

Maintenance parts (steel belt)

Model No. 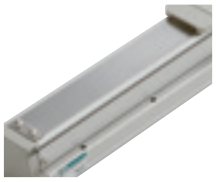	Compatibility
EBS-04-STEELBELT (stroke code 4-digit)	EBS-04 (applicable stroke product)
EBS-05-STEELBELT (stroke code 4-digit)	EBS-05 (applicable stroke product)
EBS-08-STEELBELT (stroke code 4-digit)	EBS-08 (applicable stroke product)

Safety precautions

Stepper motor compatible				Servo motor compatible							
ECS	ETS	EBR	EBS	EKS	ECV	ETV	ECS	ETS Multi-Axis	ETS	EBR	EBS

EBR-L

Rod with built-in guide

Stepper motor compatible electric actuator
Motorless specifications



CONTENTS

Product introduction	Intro
Series variation	552
● Specifications/How to order/Dimensions	
· EBR-04L	554
· EBR-05L	560
· EBR-08L	566
● Model selection	572
● Technical data	574
⚠ Safety precautions	686
Model Selection Check Sheet	708

Series variation

Type	Model No.		Applicable motor size	Body width (mm)	Screw lead (mm)	Max. load capacity (kg) *2 Horizontal *1	Max. load capacity (kg) *2 Vertical	Stroke length (mm) and max. speed (mm/s) *3 50 mm	100	150	200	250	300	350	400	450	500	550	600	650	700	750	800	850	900	950	1000	1050	1100	Page
Rod with built-in guide		EBR-04L*-06	□42	44	6	20	5	300 mm/s					250			*4 1.63 sec													554
		EBR-04L*-12			12	12	2	600					510			0.84 sec													
		EBR-05L*-02	□42	54	2	30	10	100 mm/s					85			4.71 sec													560
		EBR-05L*-05			5	30	10	250					200			2.02 sec													
		EBR-05L*-10			10	15	5	500					400			1.04 sec													
		EBR-05L*-20			20	10	2.5	1000					850			0.56 sec													
		EBR-08L*-05	□56 □60	82	5	50	15	250							200							3.52 sec								566
		EBR-08L*-10			10	30	8	500							400							1.79 sec							
		EBR-08L*-20			20	12	2.5	1000							850							0.91 sec							

*1: The load capacity when wall mounted is the same as for horizontal installation.
*2: The rated thrust and max. load capacity values are the allowable values for the actuator body; the actual thrust and load capacity are limited by the motor used.
*3: The max. speed is the speed when the motor mounted by the customer can output a rotation speed of 3000 rpm.
The max. speed is restricted by the stroke. Do not move at speeds beyond the limit.
*4: ⏱ shows the positioning time. Maximum stroke when installed horizontally and operated at max. speed and max. acceleration/deceleration. Note that this is not the value at maximum load capacity.

How to order

Rod with built-in guide

EBR - 05 L E - 00 - 02 0050 N NN - A A N N

Ⓐ Body size

04	Body width 44 mm
05	Body width 54 mm
08	Body width 82 mm

Ⓑ Motor

L	None

Ⓒ Motor mounting direction

E	Straight mounting
R	Right mounting
D	Bottom mounting
L	Left mounting

Ⓓ Screw lead

02	2 mm
05	5 mm
06	6 mm
10	10 mm
12	12 mm

Ⓔ Stroke length

0050 to 0700	50 mm (In 50 mm increments) 700 mm

Ⓕ Brake

N	None

Ⓖ Mounted motor specification

A B C	Refer to the list on the page at right

Ⓗ Motor size

A	□42
B	□56
C	□60

Ⓘ Origin sensor

N	None
C	Yes

Ⓙ Limit sensor

N	None
B	Yes

*This product is composed of an actuator (and motor mounting parts) only; there is no motor attached.
The user must prepare, mount, and adjust the motor and driver.

List of stepper motors recommended for mounting

Code	Manufacturer	Series	□42	□56	□60
A	Oriental Motor Co., Ltd.	AZ	AZM46□0□	-	AZM66□0□ AZM69□0□
		AR	ARM46□0□	-	ARM66□0□ ARM69□0□
B	MinebeaMitsumi Inc.	A17PM/A23KM	A17PM□□□□CSTBCN	A23KM□□□□CSTBCN	-
B	Dyadic Systems Co., Ltd.	RMJ	RMJ0411	-	-
C		RMJ	-	RMJ0611/RMJ1211	-

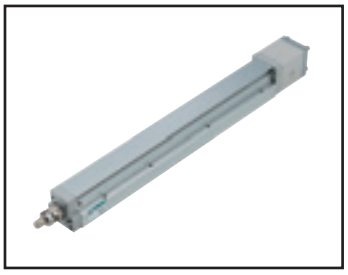

Electric actuator (motorless) Rod with built-in guide

EBR-04LE

Straight motor mounting

● Stepper motor size: □42

RoHS

How to order

EBR - 04 L E - 00 - 06 0050 N NN - A A N N

(A) (B) (C) (D) (E) (F) (G) (H) (I) (J)

(A) Body size	
04	Body width 44 mm

(B) Motor	
L	None

(C) Motor mounting direction	
E	Straight mounting

(D) Screw lead	
06	6 mm
12	12 mm

(E) Stroke length	
0050 to 0400	50 mm (In 50 mm increments) 400 mm

(F) Brake	
N	None

(G) Mounted motor specification	
A	Select the mounted motor specification from the table at right.
B	

(H) Motor size	
A	□42

(I) Origin sensor *1	
N	None
C	Yes

(J) Limit sensor *1	
N	None
B	Yes

Manufacturer	□42
Oriental Motor Co., Ltd.	A
MinebeaMitsumi Inc.	B
Dyadic Systems Co., Ltd.	B

*Refer to page 553 for the motor model No.

*1 Origin sensor and limit sensor are a set. As it is both-or-nothing, select "None" for both.

Specifications

Applicable motor sizes		□42 Stepper motor	
Drive method		Ball screw ø10	
Stroke length	mm	50 to 400	
Screw lead	mm	6	12
Max. load capacity *1	kg Horizontal	20	12
	kg Vertical	5	2
Max. speed	mm/s	300	600
Rated thrust *1	N	141	71
Repeatability	mm	±0.01	
Lost motion	mm	0.1 or less	
Drive system weight	kg	0.6	
Other inertia	kg·cm^2	0.045	
Coefficient of friction		0.03	
Mechanical efficiency		0.8	
Sliding resistance	N	6	
Ball screw length		Stroke + 200	
Operating ambient temperature, humidity		0 to 40°C (no freezing), 35 to 80% RH (no condensation)	
Storage ambient temperature, humidity		-10 to 50°C (no freezing), 35 to 80% RH (no condensation)	
Atmosphere		No corrosive gas, explosive gas, or dust	

*Reference value. The output is limited by the motor used. Select a model suited to the customer's motor.
*Refer to page 574 for the allowable applied load for the overhang amount.
*1 Rated thrust and max. load capacity are guideline values assuming that the motor mounted will output the rated torque.

Stroke and max. speed

(mm/s)

Screw lead \ Stroke length	50 to 250	300	350	400
6	300	250		
12	600	510		

*Max. speed is when the motor mounted by the customer can output rotation speed of 3000 rpm.
The max. speed is restricted by the stroke. Do not move at speeds beyond the limit.

Dimensions Straight motor mounting

● EBR-04LE

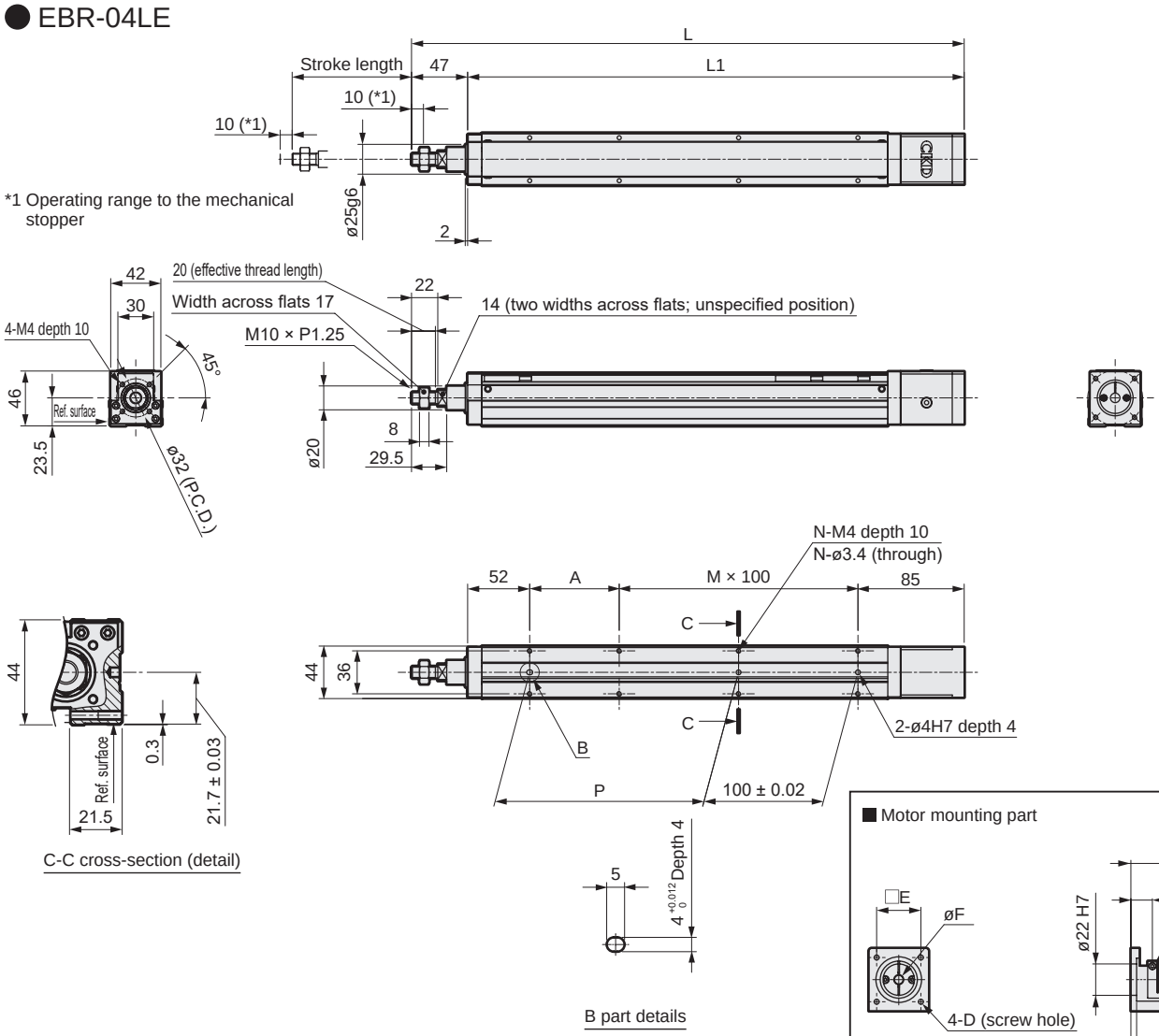

Mounted motor specification	D	E	F	Motor mounting bolt
A	3.5	31	6	4-M3 × L12
B	3.5	31	5	4-M3 × L12

*When the stroke is 50 mm, in some cases sensors must be attached on both sides.

Stroke code	0050	0100	0150	0200	0250	0300	0350	0400
Stroke length (mm)	50	100	150	200	250	300	350	400
L	309	359	409	459	509	559	609	659
L1	262	312	362	412	462	512	562	612
A	25	75	25	75	25	75	25	75
M	1	1	2	2	3	3	4	4
N	6	6	8	8	10	10	12	12
P	25	75	125	175	225	275	325	375
Weight (kg)	1.1	1.2	1.4	1.6	1.7	1.9	2.0	2.2

List of attachments

[Motor mounting parts]

Mounted motor specification	Coupling	Motor mounting bolt	
		Size	Quantity
A	Assembled at shipment	M3	4
B		M3	4

[Origin sensor, limit sensor]

Sensor		
Manufacturer	Model	Included quantity
KITA	KT-32N-2M	3

*Refer to page 578 for sensor specifications.

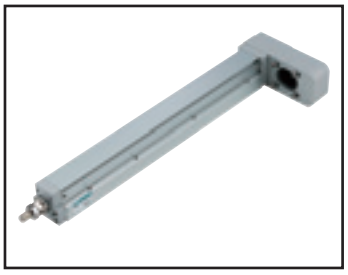

Electric actuator (motorless) Rod with built-in guide

EBR-04L*

Motor side mounting (left, right, bottom)

● Stepper motor size: □42

RoHS

How to order

EBR - 04 L R - 00 - 06 0050 N NN - A A N N

(A) (B) (C) (D) (E) (F) (G) (H) (I) (J)

(A) Body size

04	Body width 44 mm

(B) Motor

L	None

(C) Motor mounting direction

R	Right mounting
D	Bottom mounting
L	Left mounting

(D) Screw lead

06	6 mm
12	12 mm

(E) Stroke length

0050 to 0400	50 mm (In 50 mm increments) 400 mm

(F) Brake

N	None

(G) Mounted motor specification

A	Select the mounted motor specification from the table at right.
B	

Manufacturer	□42
Oriental Motor Co., Ltd.	A
MinebeaMitsumi Inc.	B
Dyadic Systems Co., Ltd.	B

*Refer to page 553 for the motor model No.

(H) Motor size

A	□42

(I) Origin sensor *1

N	None
C	Yes

(J) Limit sensor *1

N	None
B	Yes

*1 Origin sensor and limit sensor are a set. As it is both-or-nothing, select "None" for both.

Specifications

Applicable motor sizes		□42 Stepper motor	
Drive method		Ball screw ø10	
Stroke length	mm	50 to 400	
Screw lead	mm	6	12
Max. load capacity *1	kg Horizontal	20	12
	kg Vertical	5	2
Max. speed	mm/s	300	600
Rated thrust *1	N	141	71
Repeatability	mm	±0.01	
Lost motion	mm	0.1 or less	
Drive system weight	kg	0.6	
Other inertia	kg·cm^2	0.09	
Coefficient of friction		0.03	
Mechanical efficiency		0.8	
Sliding resistance	N	6	
Ball screw length		Stroke + 200	
Operating ambient temperature, humidity		0 to 40°C (no freezing) 35 to 80% RH (no condensation)	
Storage ambient temperature, humidity		-10 to 50°C (no freezing) 35 to 80% RH (no condensation)	
Atmosphere		No corrosive gas, explosive gas, or dust	

*Reference value. The output is limited by the motor used. Select a model suited to the customer's motor.
*Refer to page 574 for the allowable applied load for the overhang amount.
*1 Rated thrust and max. load capacity are guideline values assuming that the motor mounted will output the rated torque.

Stroke and max. speed

(mm/s)

Screw lead \ Stroke length	50 to 250	300	350	400
6	300	250		
12	600	510		

*Max. speed is when the motor mounted by the customer can output rotation speed of 3000 rpm.
The max. speed is restricted by the stroke. Do not move at speeds beyond the limit.

Dimensions Motor right-side mounting

● EBR-04LR

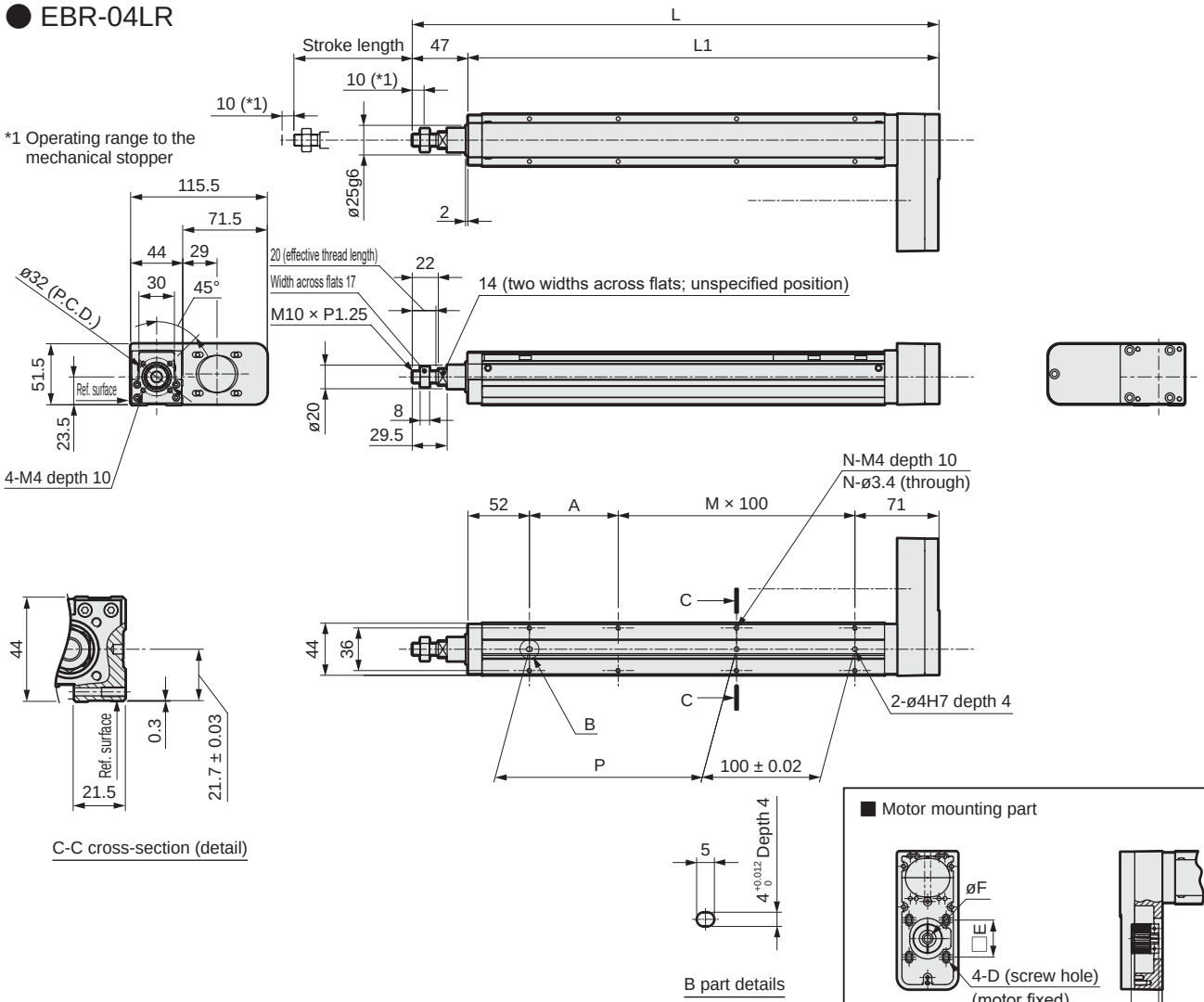

Mounted motor specification	D	E	F	Motor mounting bolt
A	3.5	31	6	4-M3 × L12
B	3.5	31	5	4-M3 × L12

*When the stroke is 50 mm, in some cases sensors must be attached on both sides.

Stroke code	0050	0100	0150	0200	0250	0300	0350	0400
Stroke length (mm)	50	100	150	200	250	300	350	400
L	295	345	395	445	495	545	595	645
L1	248	298	348	398	448	498	548	598
A	25	75	25	75	25	75	25	75
M	1	1	2	2	3	3	4	4
N	6	6	8	8	10	10	12	12
P	25	75	125	175	225	275	325	375
Weight (kg)	1.3	1.5	1.6	1.8	1.9	2.1	2.2	2.4

List of attachments

[Motor mounting parts]

Mounted motor specification	Timing belt, pulley	Motor mounting bolt	
		Size	Quantity
A	Included at shipment	M3	4
B		M3	4

[Origin sensor, limit sensor]

Sensor		
Manufacturer	Model	Included quantity
KITA	KT-32N-2M	3

*Refer to page 578 for sensor specifications.

Dimensions Motor bottom mounting

● EBR-04LD

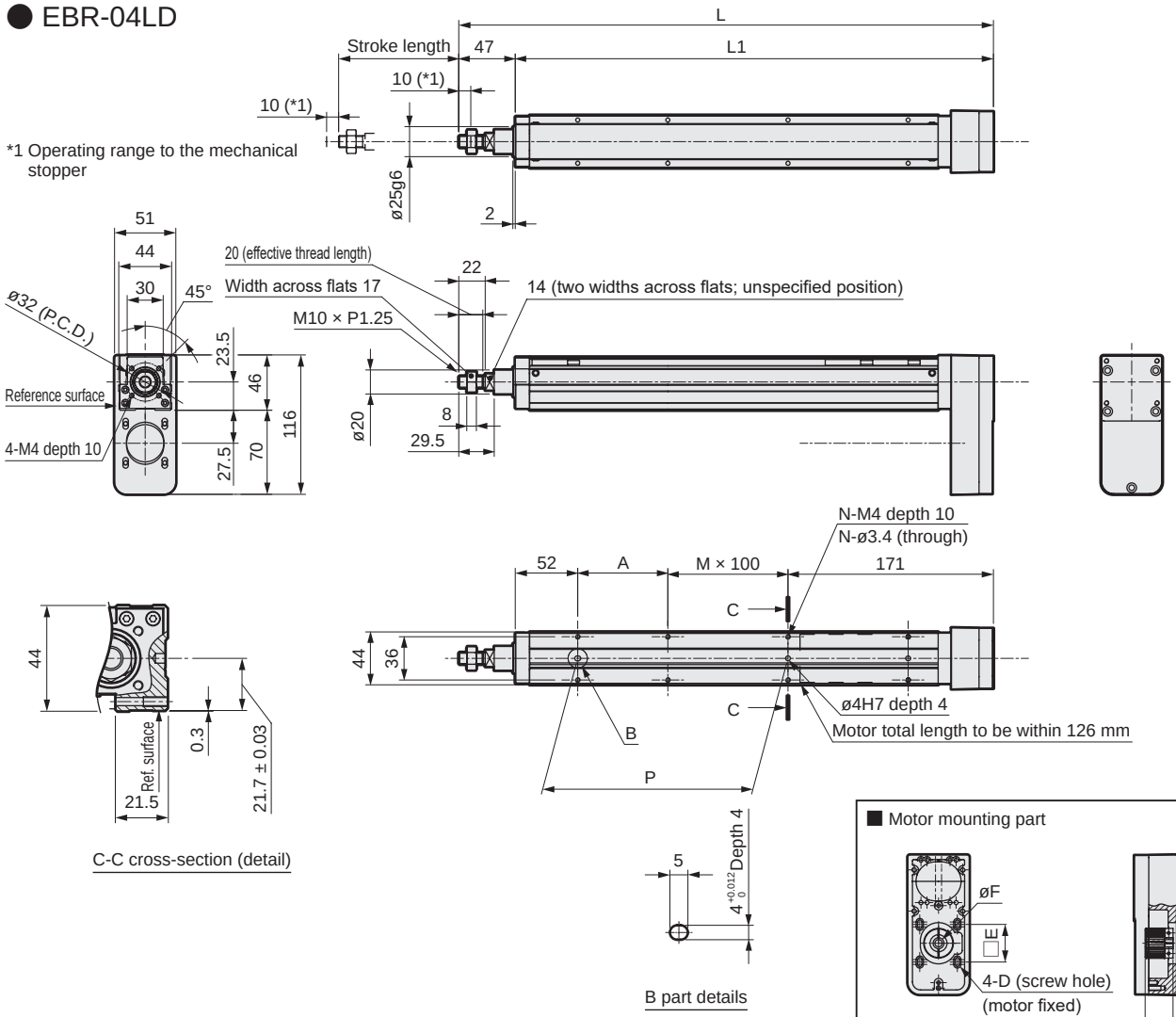

■ Motor mounting part

Mounted motor specification	D	E	F	Motor mounting bolt
A	3.5	31	6	4-M3 × L12
B	3.5	31	5	4-M3 × L12

*When the stroke is 50 mm, in some cases sensors must be attached on both sides.

Stroke code	0050	0100	0150	0200	0250	0300	0350	0400
Stroke length (mm)	50	100	150	200	250	300	350	400
L	295	345	395	445	495	545	595	645
L1	248	298	348	398	448	498	548	598
A	25	75	25	75	25	75	25	75
M	0	0	1	1	2	2	3	3
N	4	4	6	6	8	8	10	10
P	25	75	125	175	225	275	325	375
Weight (kg)	1.3	1.5	1.6	1.8	1.9	2.1	2.2	2.4

List of attachments

[Motor mounting parts]

Mounted motor specification	Timing belt, pulley	Motor mounting bolt	
		Size	Quantity
A	Included at shipment	M3	4
B		M3	4

[Origin sensor, limit sensor]

Sensor		
Manufacturer	Model	Included quantity
KITA	KT-32N-2M	3

*Refer to page 578 for sensor specifications.

Dimensions Motor left-side mounting

● EBR-04LL

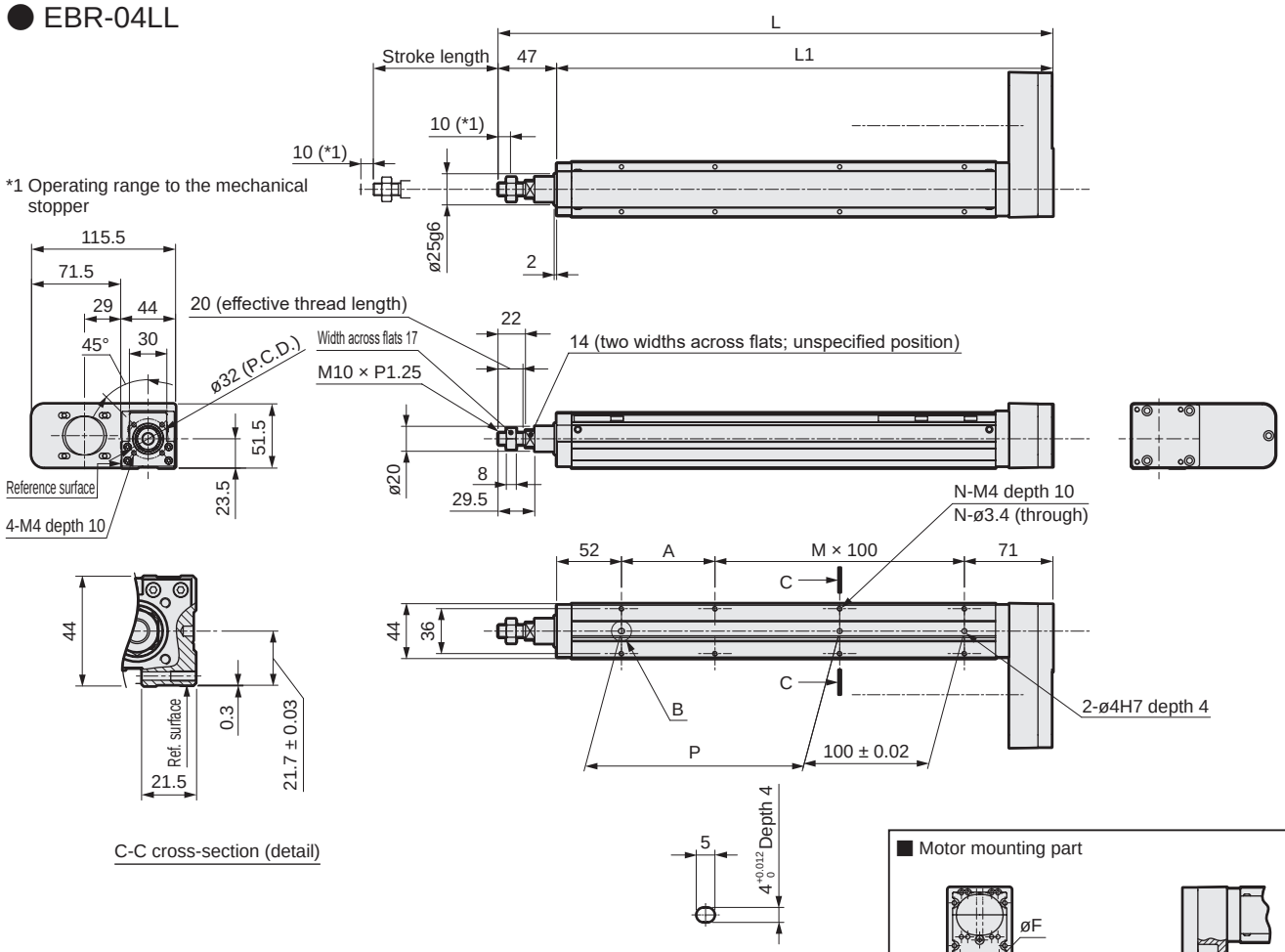

■ Motor mounting part

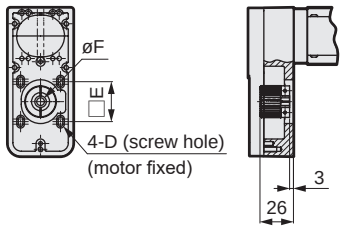

Mounted motor specification	D	E	F	Motor mounting bolt
A	3.5	31	6	4-M3 × L12
B	3.5	31	5	4-M3 × L12

*When the stroke is 50 mm, in some cases sensors must be attached on both sides.

Stroke code	0050	0100	0150	0200	0250	0300	0350	0400
Stroke length (mm)	50	100	150	200	250	300	350	400
L	295	345	395	445	495	545	595	645
L1	248	298	348	398	448	498	548	598
A	25	75	25	75	25	75	25	75
M	1	1	2	2	3	3	4	4
N	6	6	8	8	10	10	12	12
P	25	75	125	175	225	275	325	375
Weight (kg)	1.3	1.5	1.6	1.8	1.9	2.1	2.2	2.4

List of attachments

[Motor mounting parts]

Mounted motor specification	Timing belt, pulley	Motor mounting bolt	
		Size	Quantity
A	Included at shipment	M3	4
B		M3	4

[Origin sensor, limit sensor]

Sensor		
Manufacturer	Model	Included quantity
KITA	KT-32N-2M	3

*Refer to page 578 for sensor specifications.

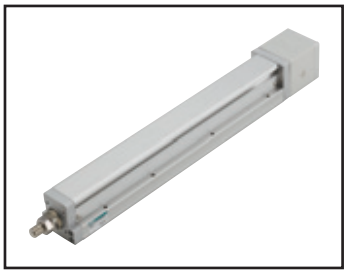

Electric actuator (motorless) Rod with built-in guide

EBR-05LE

Straight motor mounting

● Stepper motor size: □42

RoHS

How to order

EBR - 05 L E - 00 - 02 0050 N NN - A A N N

(A: 05, B: L, C: E, D: 02, E: 0050, F: N, G: A, H: A, I: N, J: N)

Ⓐ Body size	
05	Body width 54 mm

Ⓑ Motor	
L	None

Ⓒ Motor mounting method	
E	Straight mounting

Ⓓ Screw lead	
02	2 mm
05	5 mm
10	10 mm
20	20 mm

Ⓔ Stroke length	
0050 to 0400	50 mm (In 50 mm increments) 400 mm

Ⓕ Brake	
N	None

Ⓖ Mounted motor specification	
A	Select the mounted motor specification from the table at right.
B	

Ⓗ Motor size	
A	□42

Ⓘ Origin sensor *1	
N	None
C	Yes

Ⓙ Limit sensor *1	
N	None
B	Yes

Manufacturer	□42
Oriental Motor Co., Ltd.	A
MinebeaMitsumi Inc.	B
Dyadic Systems Co., Ltd.	B

*Refer to page 553 for the motor model No.

*1 Origin sensor and limit sensor are available as a set. As it is both-or-nothing, select "None" for both.

Specifications

Applicable motor sizes		□42 Stepper motor			
Drive method		Ball screw ø12			
Stroke length	mm	50 to 400			
Screw lead	mm	2	5	10	20
Max. load capacity kg *1	Horizontal	30	30	15	10
	Vertical	10	10	5	2.5
Max. speed	mm/s	100	250	500	1000
Rated thrust *1	N	854	341	170	85
Repeatability	mm	±0.01			
Lost motion	mm	0.1 or less			
Drive system weight	kg	0.9			
Other inertia	kg·cm²	0.09			
Coefficient of friction		0.03			
Mechanical efficiency		0.8			
Sliding resistance	N	6			
Ball screw length		Stroke + 200			
Operating ambient temperature, humidity		0 to 40°C (no freezing) 35 to 80% RH (no condensation)			
Storage ambient temperature, humidity		-10 to 50°C (no freezing) 35 to 80% RH (no condensation)			
Atmosphere		No corrosive gas, explosive gas, or dust			

*Reference value. The output is limited by the motor used. Select a model suited to the customer's motor.
*Refer to page 574 for the allowable applied load for the overhang amount.
*1 Rated thrust and max. load capacity are guideline values assuming that the motor mounted will output the rated torque.

Stroke and max. speed

(mm/s)

Stroke length / Screw lead	50 to 250	300 to 400
2	100	85
5	250	200
10	500	400
20	1000	850

*Max. speed is when the motor mounted by the customer can output rotation speed of 3000 rpm.
The max. speed is restricted by the stroke. Do not move at speeds beyond the limit.

Dimensions Straight motor mounting

EBR-05LE

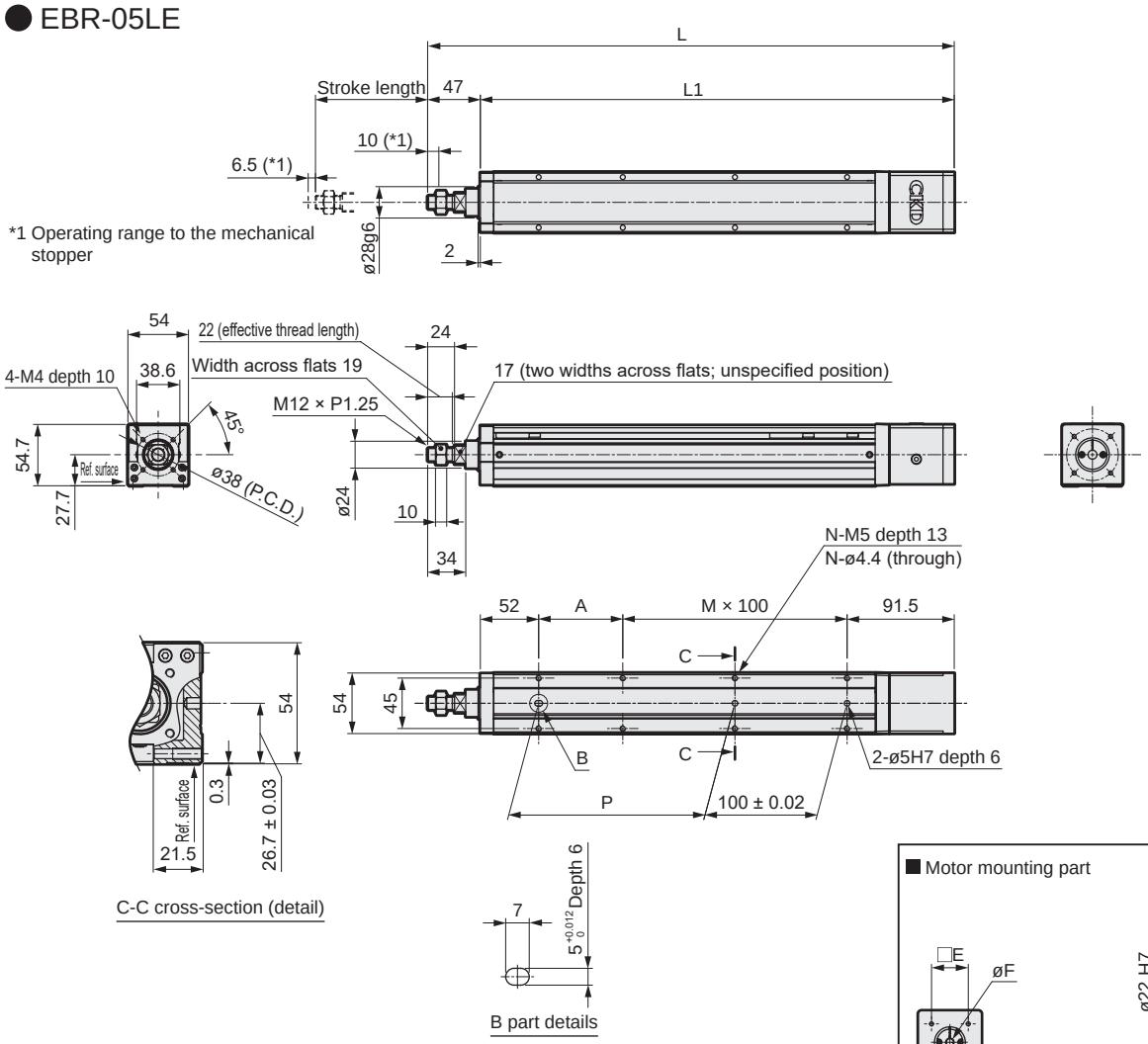

■ Motor mounting part

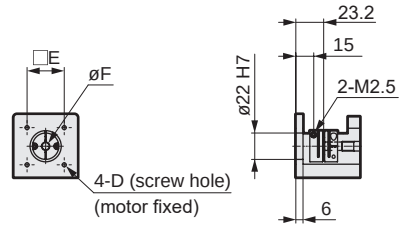

Mounted motor specification	D	E	F	Motor mounting bolt
A	3.5	31	6	4-M3 × L12
B	3.5	31	5	4-M3 × L12

*When the stroke is 50 mm, in some cases sensors must be attached on both sides.

Stroke code	0050	0100	0150	0200	0250	0300	0350	0400
Stroke length (mm)	50	100	150	200	250	300	350	400
L	315.5	365.5	415.5	495.5	515.5	565.5	615.5	665.5
L1	268.5	318.5	368.5	418.5	468.5	518.5	568.5	618.5
A	25	75	25	75	25	75	25	75
M	1	1	2	2	3	3	4	4
N	6	6	8	8	10	10	12	12
P	25	75	125	175	225	275	325	375
Weight (kg)	1.7	1.9	2.1	2.3	2.5	2.7	2.9	3.0

List of attachments

[Motor mounting parts]

Mounted motor specification	Coupling	Motor mounting bolt	
		Size	Quantity
A	Assembled at shipment	M3	4
B		M3	4

[Origin sensor, limit sensor]

Manufacturer	Model	Included quantity
KITA	KT-32N-2M	3

*Refer to page 578 for sensor specifications.



Electric actuator (motorless) Rod with built-in guide

EBR-05L*

Motor side mounting (left, right, bottom)

● Stepper motor size: □42

RoHS

How to order

EBR - 05 L R - 00 - 02 0050 N NN - A A N N

(A) (B) (C) (D) (E) (F) (G) (H) (I) (J)

(A) Body size

05	Body width 54 mm

(B) Motor

L	None

(C) Motor mounting direction

R	Right mounting
D	Bottom mounting
L	Left mounting

(D) Screw lead

02	2 mm
05	5 mm
10	10 mm
20	20 mm

(E) Stroke length

0050 to 0400	50 mm (In 50 mm increments) 400 mm

(F) Brake

N	None

(G) Mounted motor specification

A	Select the mounted motor specification from the table at right.
B	

(H) Motor size

A	□42

(I) Origin sensor *1

N	None
C	Yes

(J) Limit sensor *1

N	None
B	Yes

Manufacturer	□42
Oriental Motor Co., Ltd.	A
MinebeaMitsumi Inc.	B
Dyadic Systems Co., Ltd.	B

*Refer to page 553 for the motor model No.

*1 Origin sensor and limit sensor are available as a set. As it is both-or-nothing, select "None" for both.

Specifications

Applicable motor sizes		□42 Stepper motor			
Drive method		Ball screw ø12			
Stroke length	mm	50 to 400			
Screw lead		2	5	10	20
Max. load capacity *1	kg Horizontal	30	30	15	10
	kg Vertical	10	10	5	2.5
Max. speed	mm/s	100	250	500	1000
Rated thrust *1	N	854	341	170	85
Repeatability	mm	±0.01			
Lost motion	mm	0.1 or less			
Drive system weight	kg	0.9			
Other inertia	kg·cm²	0.09			
Coefficient of friction		0.03			
Mechanical efficiency		0.8			
Sliding resistance	N	6			
Ball screw length		Stroke + 200			
Operating ambient temperature, humidity		0 to 40°C (no freezing) 35 to 80% RH (no condensation)			
Storage ambient temperature, humidity		-10 to 50°C (no freezing) 35 to 80% RH (no condensation)			
Atmosphere		No corrosive gas, explosive gas, or dust			

*Reference value. The output is limited by the motor used. Select a model suited to the customer's motor.

*Refer to page 574 for the allowable applied load for the overhang amount.

*1 Rated thrust and max. load capacity are guideline values assuming that the motor mounted will output the rated torque.

Stroke and max. speed

(mm/s)

Lead \ Stroke length	50 to 250	300	350	400
2	100	85		
5	250	200		
10	500	400		
20	1000	850		

*Max. speed is when the motor mounted by the customer can output rotation speed of 3000 rpm.
The max. speed is restricted by the stroke. Do not move at speeds beyond the limit.
Use Lead 2 at 0.5 G or less.

Dimensions Motor right-side mounting

● EBR-05LR

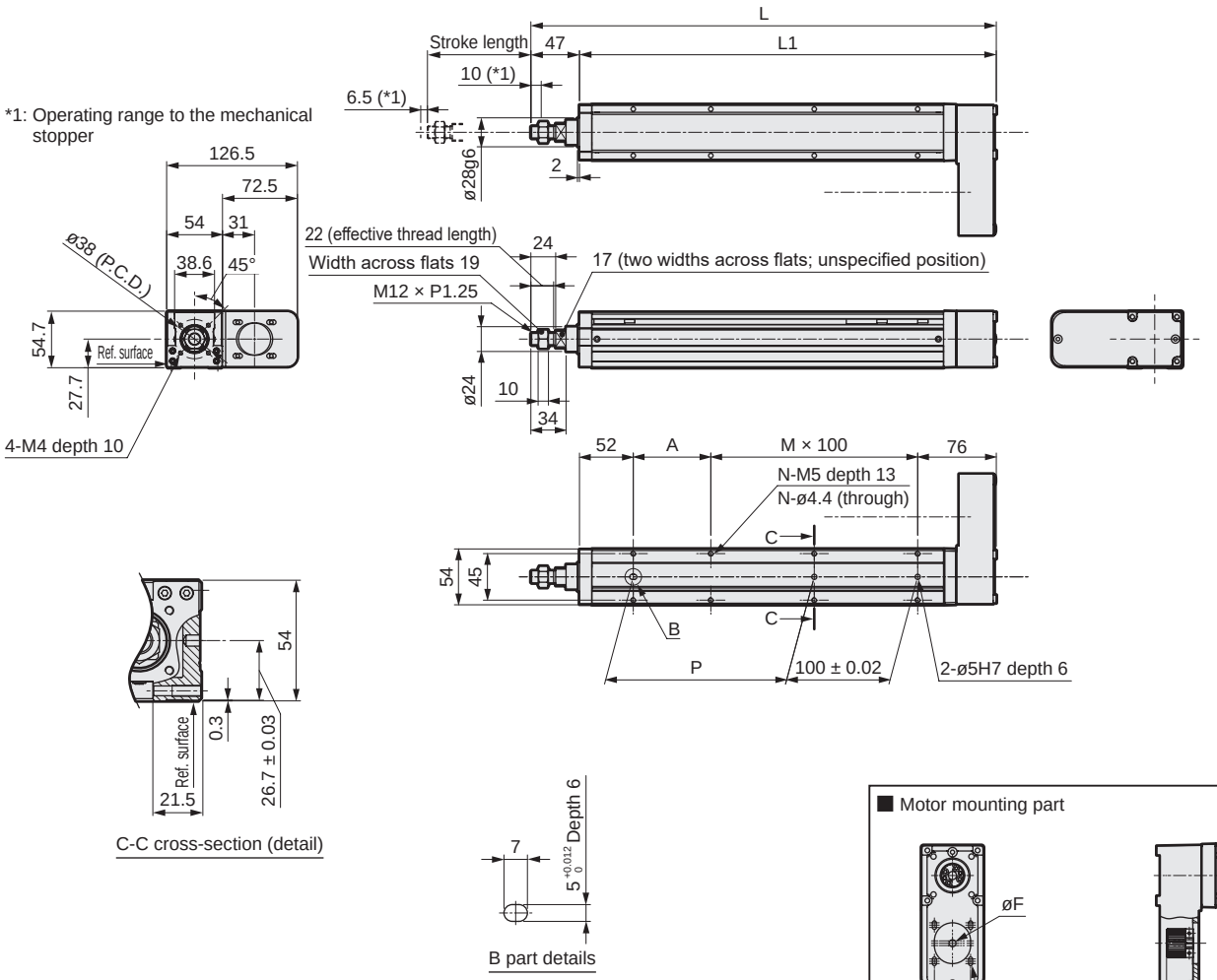

C-C cross-section (detail)

B part details

■ Motor mounting part

Mounted motor specification	D	E	F	Motor screw
A	3.5	31	6	4-M3 × L12
B	3.5	31	5	4-M3 × L12

*When the stroke is 50 mm, in some cases sensors must be attached on both sides.

Stroke code	0050	0100	0150	0200	0250	0300	0350	0400
Stroke length (mm)	50	100	150	200	250	300	350	400
L	300	350	400	450	500	550	600	650
L1	253	303	353	403	453	503	553	603
A	25	75	25	75	25	75	25	75
M	1	1	2	2	3	3	4	4
N	6	6	8	8	10	10	12	12
P	25	75	125	175	225	275	325	375
Weight (kg)	1.9	2.1	2.3	2.5	2.7	2.9	3.1	3.2

List of attachments

[Motor mounting]

Mounted motor specification	Timing belt, pulley	Motor mounting bolt	
		Size	Included quantity
A	Included at shipment	M3	4
B		M3	4

[When origin/limit sensors are selected]

Sensor		
Manufacturer	Model	Included quantity
KITA	KT-32N-2M	3

*Refer to page 578 for sensor specifications.

Dimensions Motor bottom mounting

● EBR-05LD

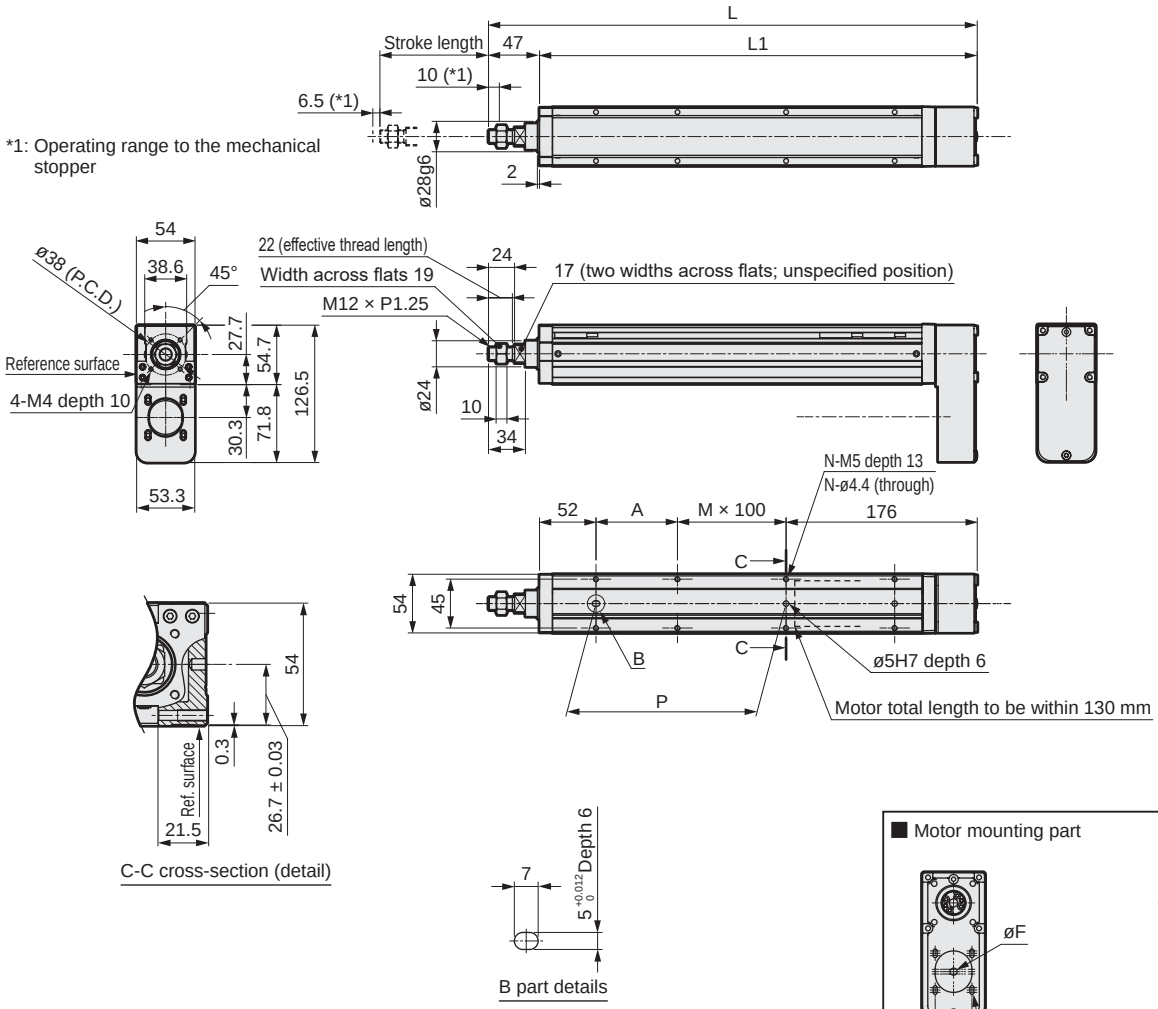

■ Motor mounting part

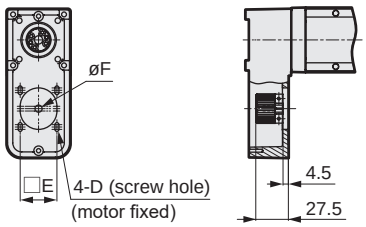

Mounted motor specification	D	E	F	Motor screw
A	3.5	31	6	4-M3 × L12
B	3.5	31	5	4-M3 × L12

*When the stroke is 50 mm, in some cases sensors must be attached on both sides.

Stroke code	0050	0100	0150	0200	0250	0300	0350	0400
Stroke length (mm)	50	100	150	200	250	300	350	400
L	300	350	400	450	500	550	600	650
L1	253	303	353	403	453	503	553	603
A	25	75	25	75	25	75	25	75
M	0	0	1	1	2	2	3	3
N	4	4	6	6	8	8	10	10
P	25	75	125	175	225	275	325	375
Weight (kg)	1.9	2.1	2.3	2.5	2.7	2.9	3.1	3.2

List of attachments

[Motor mounting]

Mounted motor specification	Timing belt, pulley	Motor mounting bolt	
		Size	Included quantity
A	Included at shipment	M3	4
B		M3	4

[When origin/limit sensors are selected]

Sensor		
Manufacturer	Model	Included quantity
KITA	KT-32N-2M	3

*Refer to page 578 for sensor specifications.

Dimensions Motor left-side mounting

● EBR-05LL

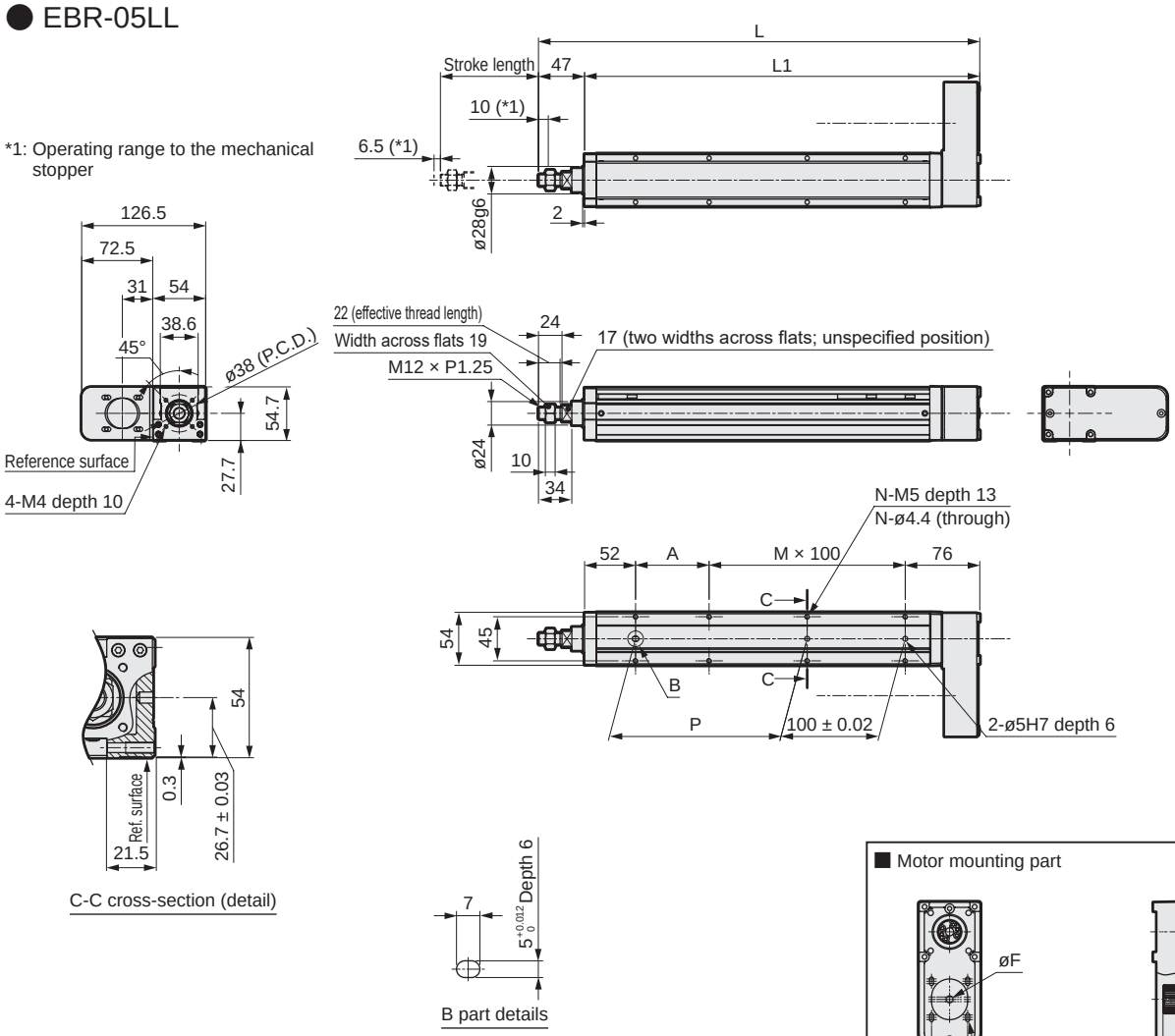

■ Motor mounting part

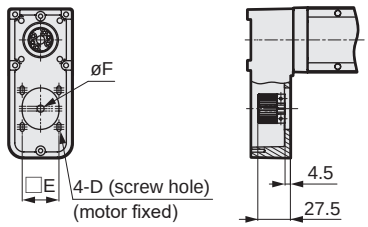

Mounted motor specification	D	E	F	Motor screw
A	3.5	31	6	4-M3 × L12
B	3.5	31	5	4-M3 × L12

*When the stroke is 50 mm, in some cases sensors must be attached on both sides.

Stroke code	0050	0100	0150	0200	0250	0300	0350	0400
Stroke length (mm)	50	100	150	200	250	300	350	400
L	300	350	400	450	500	550	600	650
L1	253	303	353	403	453	503	553	603
A	25	75	25	75	25	75	25	75
M	1	1	2	2	3	3	4	4
N	6	6	8	8	10	10	12	12
P	25	75	125	175	225	275	325	375
Weight (kg)	1.9	2.1	2.3	2.5	2.7	2.9	3.1	3.2

List of attachments

[Motor mounting]

Mounted motor specification	Timing belt, pulley	Motor mounting bolt	
		Size	Included quantity
A	Included at shipment	M3	4
B		M3	4

[When origin/limit sensors are selected]

Sensor		
Manufacturer	Model	Included quantity
KITA	KT-32N-2M	3

*Refer to page 578 for sensor specifications.

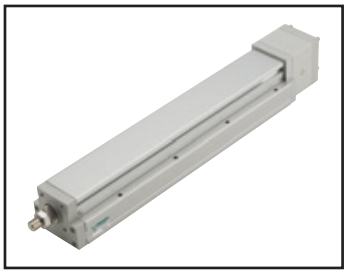

Electric actuator (motorless) Rod with built-in guide

EBR-08LE

Straight motor mounting

● Stepper motor size: □56, □60

RoHS

How to order

EBR - 08 L E - 00 - 05 0050 N NN - A B N N

Ⓐ Ⓑ Ⓒ Ⓓ Ⓔ Ⓕ Ⓖ Ⓗ Ⓘ Ⓙ

Ⓐ Body size	
08	Body width 82 mm

Ⓑ Motor	
L	None

Ⓒ Motor mounting direction	
E	Straight mounting

Ⓓ Screw lead	
05	5 mm
10	10 mm
20	20 mm

Ⓔ Stroke length	
0050 to 0700	50 mm (In 50 mm increments) 700 mm

Ⓕ Brake	
N	None

Ⓖ Mounted motor specification	
A	Select the mounted motor specification from the table at right.
B	
C	

Ⓗ Motor size	
B	□56
C	□60

Ⓘ Origin sensor *1	
N	None
C	Yes

Ⓙ Limit sensor *1	
N	None
B	Yes

Manufacturer	□ 56	□ 60
Oriental Motor Co., Ltd.	-	A
MinebeaMitsumi Inc.	B	-
Dyadic Systems Co., Ltd.	C	-

*Refer to page 553 for the motor model No.

*1 Origin sensor and limit sensor are available as a set. As it is both-or-nothing, select "None" for both.

Specifications

Applicable motor sizes		□56, □60 stepper motor		
Drive method		Ball screw ø16		
Stroke length	mm	50 to 700		
Screw lead	mm	5	10	20
Max. load capacity *1	kg Horizontal	50	30	12
	kg Vertical	15	8	2.5
Max. speed	mm/s	250	500	1000
Rated thrust *1	N	683	341	174
Repeatability	mm	±0.01		
Lost motion	mm	0.1 or less		
Drive system weight	kg	1.7		
Other inertia	kg·cm²	0.24		
Coefficient of friction		0.03		
Mechanical efficiency		0.8		
Sliding resistance	N	20		
Ball screw length		Stroke + 200		
Operating ambient temperature, humidity		0 to 40°C (no freezing) 35 to 80% RH (no condensation)		
Storage ambient temperature, humidity		-10 to 50°C (no freezing) 35 to 80% RH (no condensation)		
Atmosphere		No corrosive gas, explosive gas, or dust		

*Reference value. The output is limited by the motor used. Select a model suited to the customer's motor.
*Refer to page 574 for the allowable applied load for the overhang amount.
*1 Rated thrust and max. load capacity are guideline values assuming that the motor mounted will output the rated torque.

Stroke and max. speed

(mm/s)

Stroke length / Screw lead	50 to 300	350 to 700
5	250	200
10	500	400
20	1000	850

*Max. speed is when the motor mounted by the customer can output rotation speed of 3000 rpm.
The max. speed is restricted by the stroke. Do not move at speeds beyond the limit.

Dimensions Straight motor mounting

● EBR-08LE

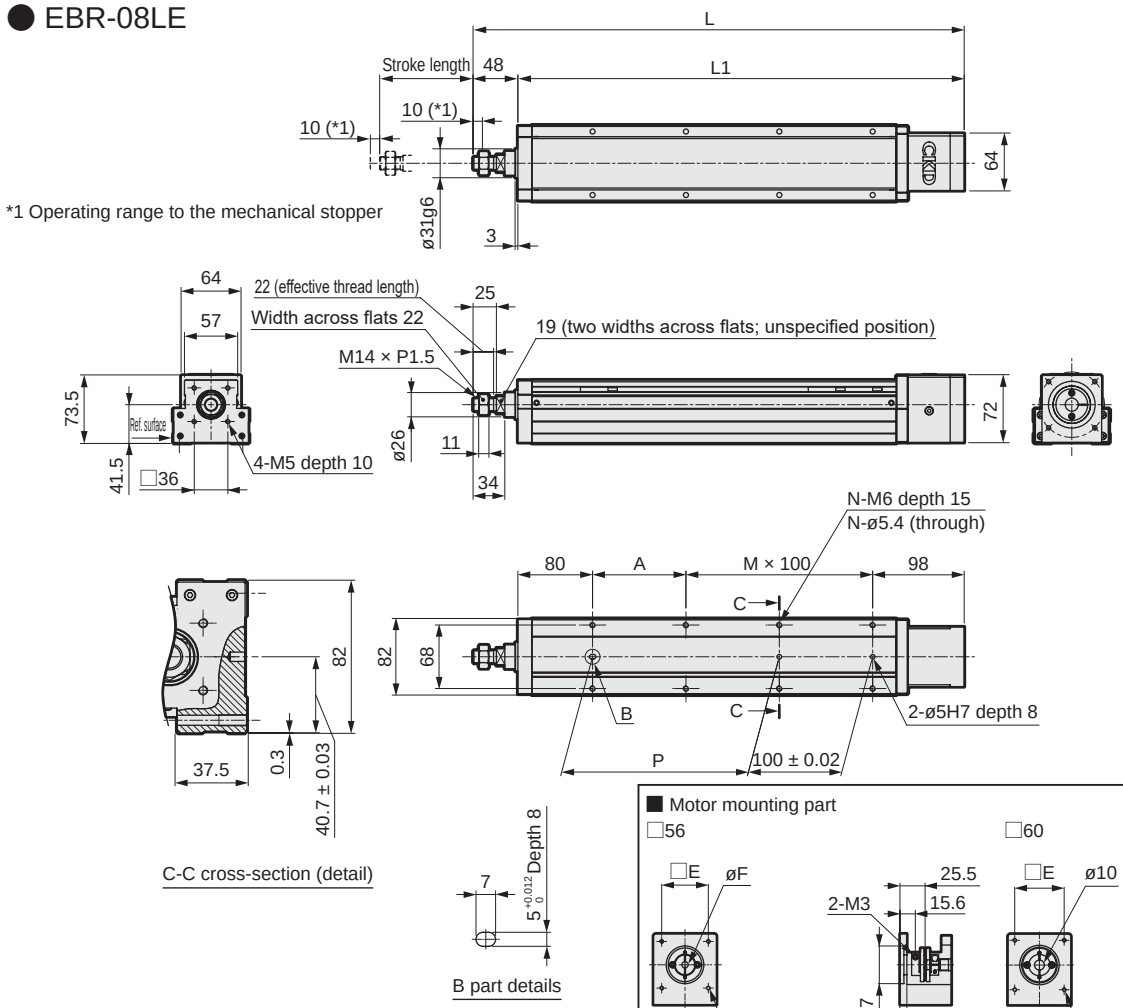

Mounted motor specification		D	E	F	Motor mounting bolt
A	□60	M4 depth 10	50	10	4-M4 × L16
B	□56	M4 depth 8	47.14	6.35	4-M4 × L12
C	□56	M4 depth 8	47.14	8	4-M4 × L12

*1 Operating range to the mechanical stopper

*When the stroke is 50 mm,,
in some cases sensors must be attached on both sides.

Stroke code	0050	0100	0150	0200	0250	0300	0350	0400	0450	0500	0550	0600	0650	0700
Stroke length (mm)	50	100	150	200	250	300	350	400	450	500	550	600	650	700
L	376	426	476	526	576	626	676	726	776	826	876	926	976	1026
L1	328	378	428	478	528	578	628	678	728	778	828	878	928	978
A	50	100	50	100	50	100	50	100	50	100	50	100	50	100
M	1	1	2	2	3	3	4	4	5	5	6	6	7	7
N	6	6	8	8	10	10	12	12	14	14	16	16	18	18
P	50	100	150	200	250	300	350	400	450	500	550	600	650	700
Weight (kg)	4.0	4.4	4.8	5.1	5.5	5.9	6.3	6.6	7.0	7.4	7.7	8.1	8.5	8.8

List of attachments

[Motor mounting parts]

Mounted motor specification	Coupling	Motor mounting bolt	
		Size	Quantity
A	Assembled at shipment	M4	4
B		M4	4
C		M4	4

[Origin sensor, limit sensor]

Manufacturer	Model	Included quantity
KITA	KT-32N-2M	3

*Refer to page 578 for sensor specifications.

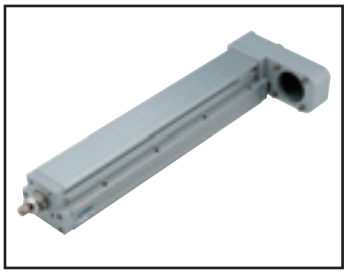

Electric actuator (motorless) Rod with built-in guide

EBR-08L*

Motor side mounting (left, right, bottom)

● Stepper motor size: □56, □60

RoHS

How to order

EBR - 08 L R - 00 - 05 0050 N NN - A B N N

(A) (B) (C) (D) (E) (F) (G) (H) (I) (J)

(A) Body size	
08	Body width 82 mm

(B) Motor	
L	None

(C) Motor mounting direction	
R	Right mounting
D	Bottom mounting
L	Left mounting

(D) Screw lead	
05	5 mm
10	10 mm
20	20 mm

(E) Stroke length	
0050 to 0700	50 mm (In 50 mm increments) 700 mm

(F) Brake	
N	None

(G) Mounted motor specification	
A	Select the mounted motor specification from the table at right.
B	
C	

(H) Motor size	
B	□56
C	□60

(I) Origin sensor *1	
N	None
C	Yes

(J) Limit sensor *1	
N	None
B	Yes

Manufacturer	□56	□60
Oriental Motor Co., Ltd.	-	A
MinebeaMitsumi Inc.	B	-
Dyadic Systems Co., Ltd.	C	-

*Refer to page 553 for the motor model No.

*1 Origin sensor and limit sensor are available as a set. As it is both-or-nothing, select "None" for both.

Specifications

Applicable motor sizes		□56, □60 stepper motor		
Drive method		Ball screw ø16		
Stroke length	mm	50 to 700		
Screw lead		5	10	20
Max. load capacity	kg Horizontal	50	30	12
	kg Vertical	15	8	2.5
Max. speed	mm/s	250	500	1000
Rated thrust	N	683	341	174
Repeatability	mm	±0.01		
Lost motion	mm	0.1 or less		
Drive system weight	kg	1.7		
Other inertia	kg·cm^2	0.52		
Coefficient of friction		0.03		
Mechanical efficiency		0.8		
Sliding resistance	N	20		
Ball screw length		Stroke + 200		
Operating ambient temperature, humidity		0 to 40°C (no freezing), 35 to 80% RH (no condensation)		
Storage ambient temperature, humidity		-10 to 50°C (no freezing), 35 to 80% RH (no condensation)		
Atmosphere		No corrosive gas, explosive gas, or dust		

*Reference value. The output is limited by the motor used. Select a model suited to the customer's motor.

*Refer to page 574 for the allowable applied load for the overhang amount.

*1 Rated thrust and max. load capacity are guideline values assuming that the motor mounted will output the rated torque.

Stroke and max. speed

(mm/s)

Lead \ Stroke length	50 to 300	350	400	450	500	550	600	650	700
5	250	200							
10	500	400							
20	1000	850							

*Max. speed is when the motor mounted by the customer can output rotation speed of 3000 rpm.
The max. speed is restricted by the stroke. Do not move at speeds beyond the limit.

Dimensions Motor right-side mounting

● EBR-08LR

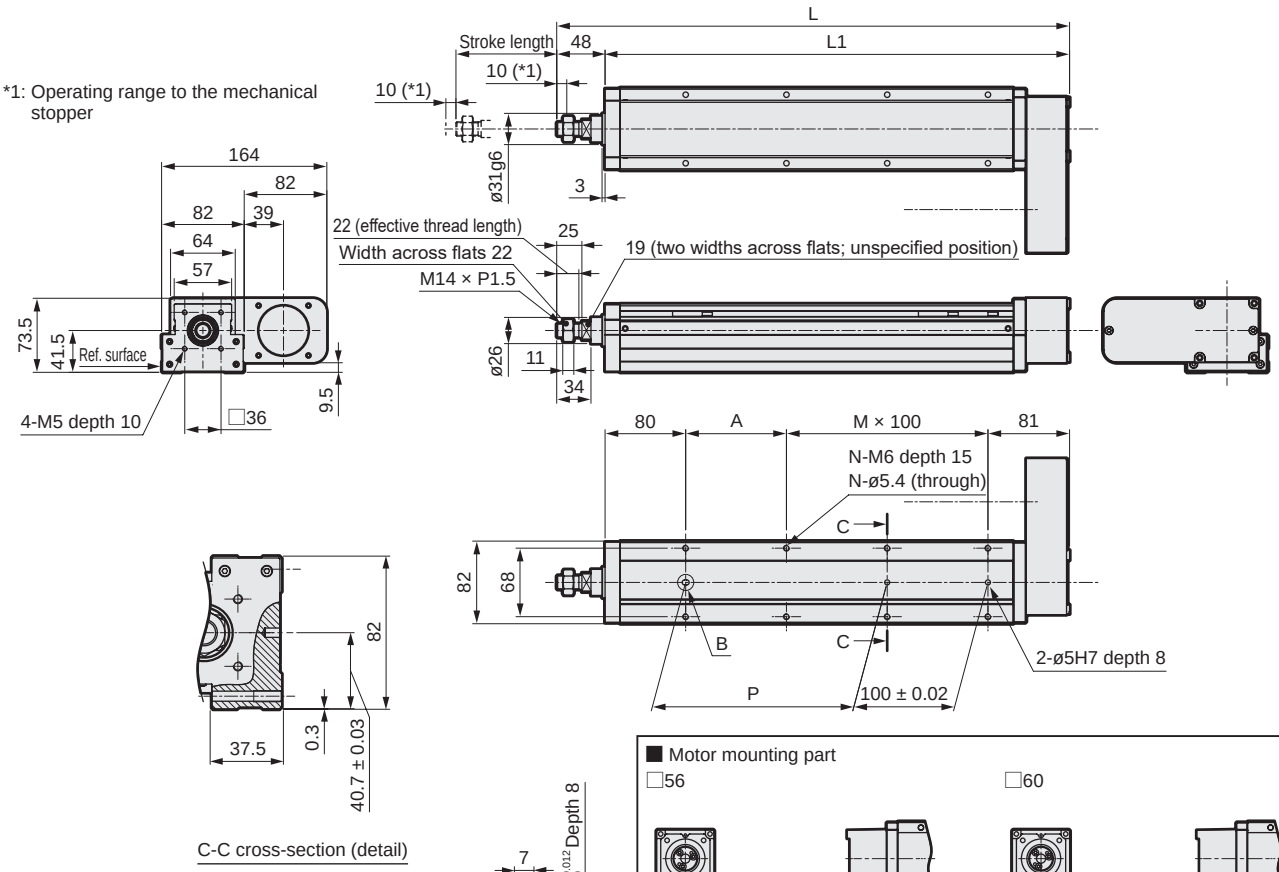

Mounted motor specification		D	E	F	Motor screw
A	□60	M4 depth 12	50	10	4-M4 × L16
B	□56	M4 depth 12	47.14	6.35	4-M4 × L16
C	□56	M4 depth 12	47.14	8	4-M4 × L16

*When the stroke is 50 mm,,
in some cases sensors must be attached on both sides.

Stroke code	0050	0100	0150	0200	0250	0300	0350	0400	0450	0500	0550	0600	0650	0700
Stroke length (mm)	50	100	150	200	250	300	350	400	450	500	550	600	650	700
L	359	409	459	509	559	609	659	709	759	809	859	909	959	1009
L1	311	361	411	461	511	561	611	661	711	761	811	861	911	961
A	50	100	50	100	50	100	50	100	50	100	50	100	50	100
M	1	1	2	2	3	3	4	4	5	5	6	6	7	7
N	6	6	8	8	10	10	12	12	14	14	16	16	18	18
P	50	100	150	200	250	300	350	400	450	500	550	600	650	700
Weight (kg)	4.4	4.8	5.1	5.5	5.9	6.2	6.6	7.0	7.3	7.7	8.1	8.4	8.8	9.1

List of attachments

[Motor mounting]

Mounted motor specification	Timing belt, pulley	Motor mounting bolt	
		Size	Included quantity
A	Included at shipment	M4	4
B		M4	4
C		M4	4

[When origin/limit sensors are selected]

Sensor		
Manufacturer	Model	Included quantity
KITA	KT-32N-2M	3

*Refer to page 578 for sensor specifications.

Dimensions Motor bottom mounting

● EBR-08LD

*1: Operating range to the mechanical stopper

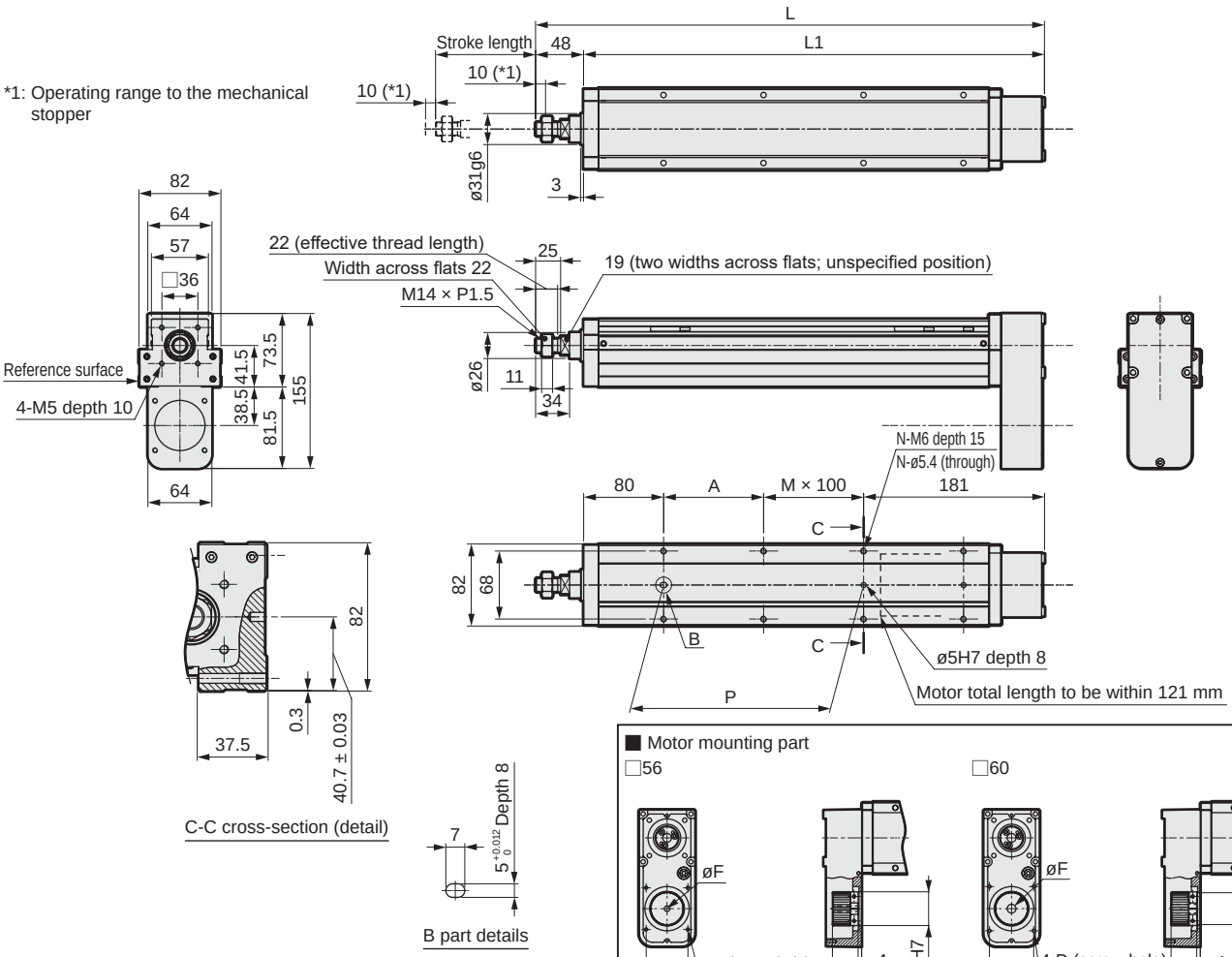

■ Motor mounting part

Mounted motor specification		D	E	F	Motor screw
A	□60	M4 depth 12	50	10	4-M4 × L16
B	□56	M4 depth 12	47.14	6.35	4-M4 × L16
C	□56	M4 depth 12	47.14	8	4-M4 × L16

*When the stroke is 50 mm,, in some cases sensors must be attached on both sides.

Stroke code	0050	0100	0150	0200	0250	0300	0350	0400	0450	0500	0550	0600	0650	0700
Stroke length (mm)	50	100	150	200	250	300	350	400	450	500	550	600	650	700
L	359	409	459	509	559	609	659	709	759	809	859	909	959	1009
L1	311	361	411	461	511	561	611	661	711	761	811	861	911	961
A	50	100	50	100	50	100	50	100	50	100	50	100	50	100
M	0	0	1	1	2	2	3	3	4	4	5	5	6	6
N	4	4	6	6	8	8	10	10	12	12	14	14	16	16
P	50	100	150	200	250	300	350	400	450	500	550	600	650	700
Weight (kg)	4.4	4.8	5.1	5.5	5.9	6.2	6.6	7.0	7.3	7.7	8.1	8.4	8.8	9.1

List of attachments

[Motor mounting]

Mounted motor specification	Timing belt, pulley	Motor mounting bolt	
		Size	Included quantity
A	Included at shipment	M4	4
B		M4	4
C		M4	4

[When origin/limit sensors are selected]

Sensor		
Manufacturer	Model	Included quantity
KITA	KT-32N-2M	3

*Refer to page 578 for sensor specifications.

Dimensions Motor left-side mounting

● EBR-08LL

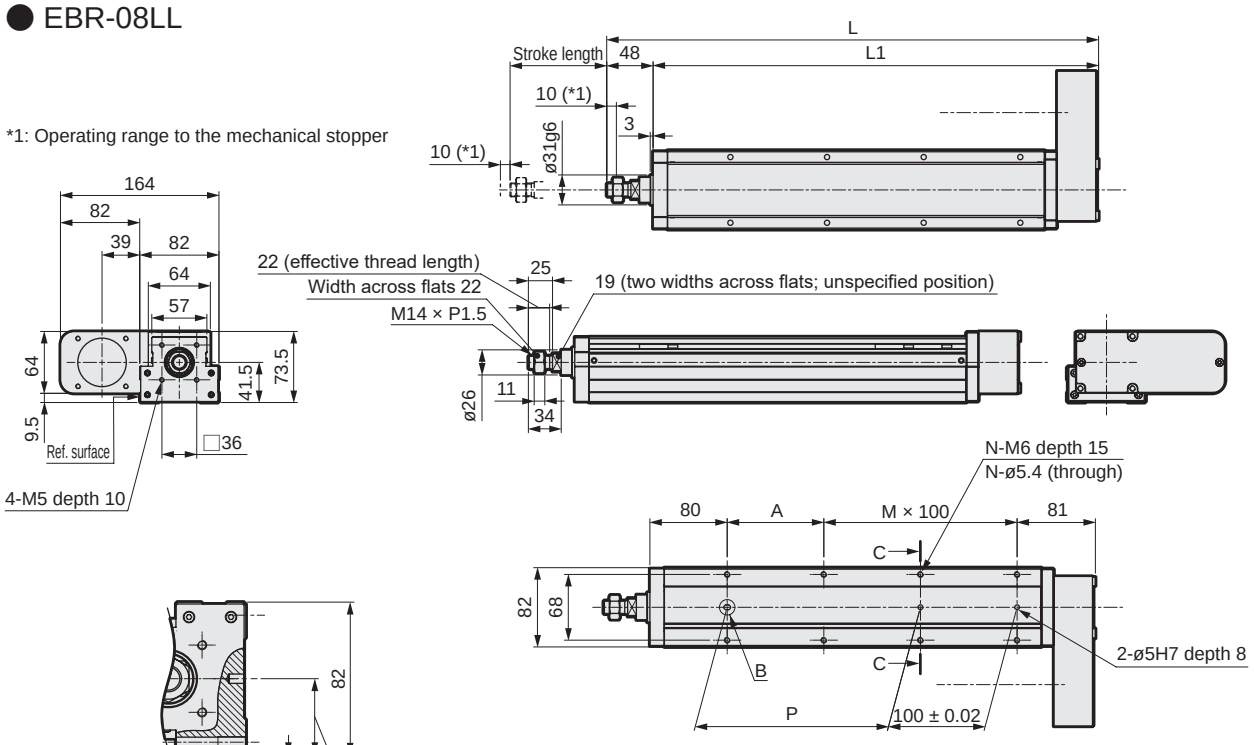

■ Motor mounting part

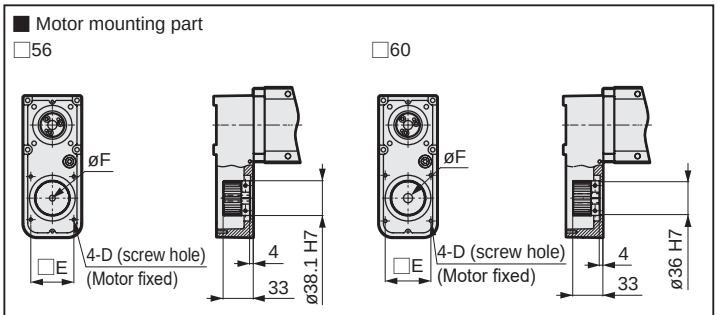

Mounted motor specification		D	E	F	Motor screw
A	□60	M4 depth 12	50	10	4-M4 × L16
B	□56	M4 depth 12	47.14	6.35	4-M4 × L16
C	□56	M4 depth 12	47.14	8	4-M4 × L16

*When the stroke is 50 mm,,
in some cases sensors must be attached on both sides.

Stroke code	0050	0100	0150	0200	0250	0300	0350	0400	0450	0500	0550	0600	0650	0700
Stroke length (mm)	50	100	150	200	250	300	350	400	450	500	550	600	650	700
L	359	409	459	509	559	609	659	709	759	809	859	909	959	1009
L1	311	361	411	461	511	561	611	661	711	761	811	861	911	961
A	50	100	50	100	50	100	50	100	50	100	50	100	50	100
M	1	1	2	2	3	3	4	4	5	5	6	6	7	7
N	6	6	8	8	10	10	12	12	14	14	16	16	18	18
P	50	100	150	200	250	300	350	400	450	500	550	600	650	700
Weight (kg)	4.4	4.8	5.1	5.5	5.9	6.2	6.6	7.0	7.3	7.7	8.1	8.4	8.8	9.1

List of attachments

[Motor mounting]

Mounted motor specification	Timing belt, pulley	Motor mounting bolt	
		Size	Included quantity
A	Included at shipment	M4	4
B		M4	4
C		M4	4

[When origin/limit sensors are selected]

Sensor		
Manufacturer	Model	Included quantity
KITA	KT-32N-2M	3

*Refer to page 578 for sensor specifications.

Model selection

STEP 1 Confirming load capacity

Load capacity varies with mounting orientation, screw lead and motor performance.
Refer to the Series Variation (page 552) and the specification table for each model to select the size and screw lead.
For motor performance, contact the motor manufacturer. For motor selection, use the actuator information (mechanical efficiency, etc.) in the specifications.

STEP 2 Confirming positioning time

Calculate the positioning time of the selected product according to the following example and confirm that the required tact is achievable.
Select the speed and acceleration/deceleration from the specification table for each model and the motor selected by the customer.

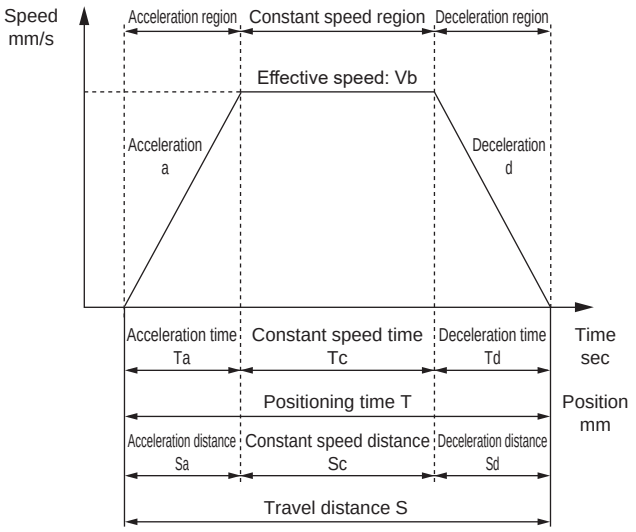

	Description	Code	Unit	Remarks
Set value	Set speed	V	mm/s	
	Set acceleration	a	mm/s^2	
	Set deceleration	d	mm/s^2	
	Travel distance	S	mm	
Calculated value	Achieved speed	Vmax	mm/s	$= \{2 \times a \times d \times S/(a + d)\}^{1/2}$
	Effective speed	Vb	mm/s	Smaller of V and Vmax
	Acceleration time	Ta	s	= Vb/a
	Deceleration time	Td	s	= Vb/d
	Constant speed time	Tc	s	= Sc/Vb
	Acceleration distance	Sa	mm	$= (a \times Ta^2)/2$
	Deceleration distance	Sd	mm	$= (d \times Td^2)/2$
	Constant speed distance	Sc	mm	= S-(Sa + Sd)
	Positioning time	T	s	= Ta + Tc + Td

*Do not use at speeds that exceed the specifications.
*Depending on the acceleration/deceleration and stroke, the trapezoidal velocity waveform may not form (the set speed may not be reached). In this case, select the effective speed (Vb) from the set speed (V) and the achieved speed (Vmax), whichever is smaller.
*Use at acceleration and deceleration of 1 G or less for horizontal use and 0.5 G or less for vertical use.
*While settling time depends on working conditions, it may take 0.2 seconds or so.
*1 G ≈ 9.8 m/s^2.
*Set the speed and acceleration by the motor selected by the customer. For motor selection and calculation of speed and acceleration, use the actuator information (mechanical efficiency, etc.) in the specifications.

STEP 3 Confirming allowable load weight

Confirm that the load weight during operation is within the allowable range (pages 574 to 575).
If the allowable load weight is exceeded, increase the size or use an external guide in conjunction.

MEMO

Allowable load weight

[When installed horizontally or wall-mounted]

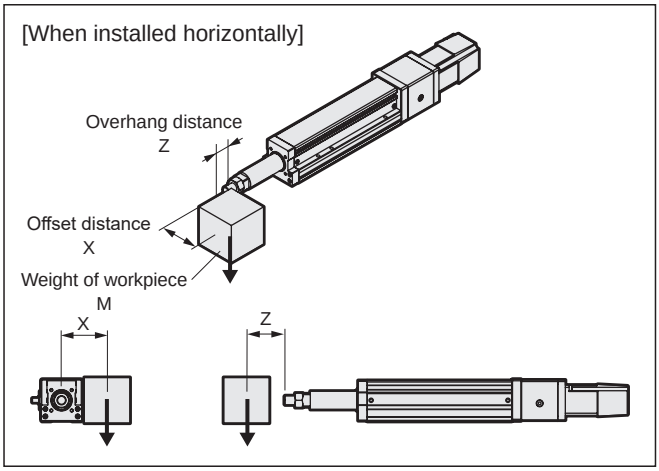

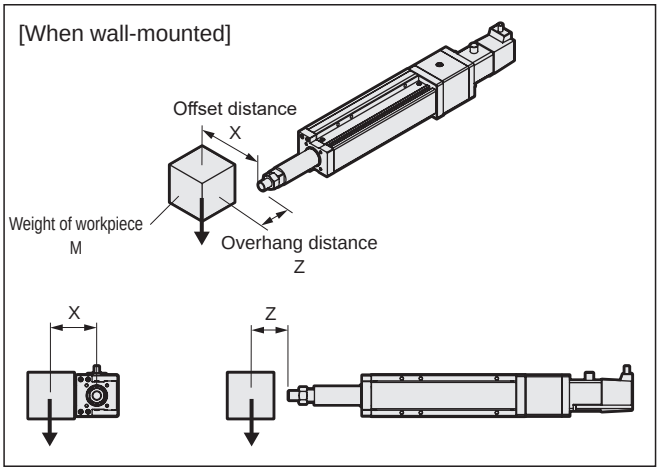

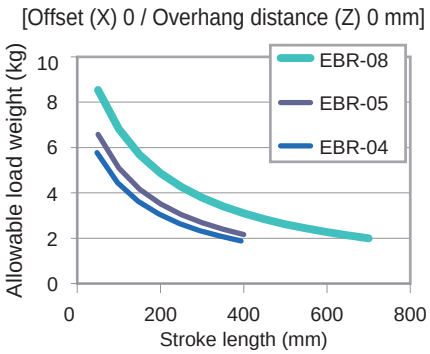

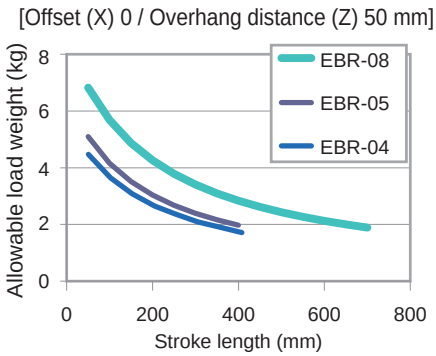

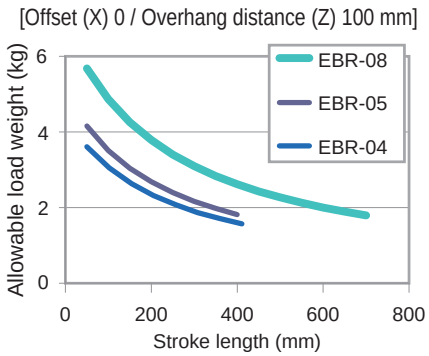

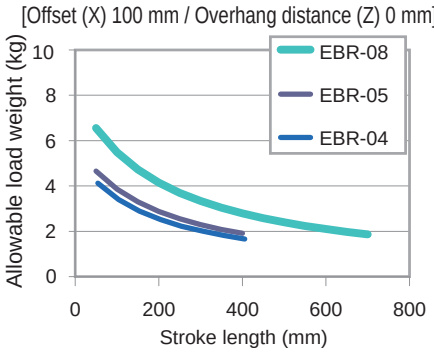

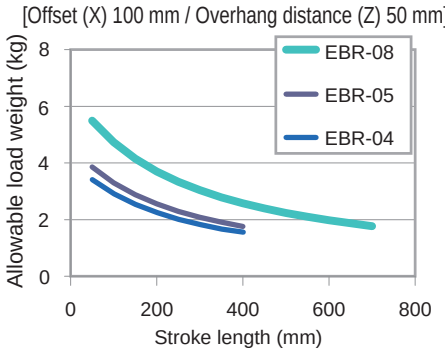

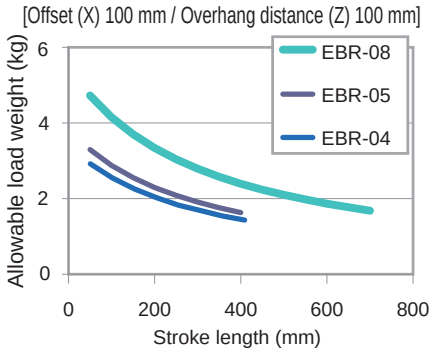

* Values are when the actuator operating life is 5,000km. (Acceleration/deceleration 0.5G, speed 300mm/s)
Screw lead: 2 mm is the value when the travel life is 1,000km.

Allowable load weight

[When installed vertically]

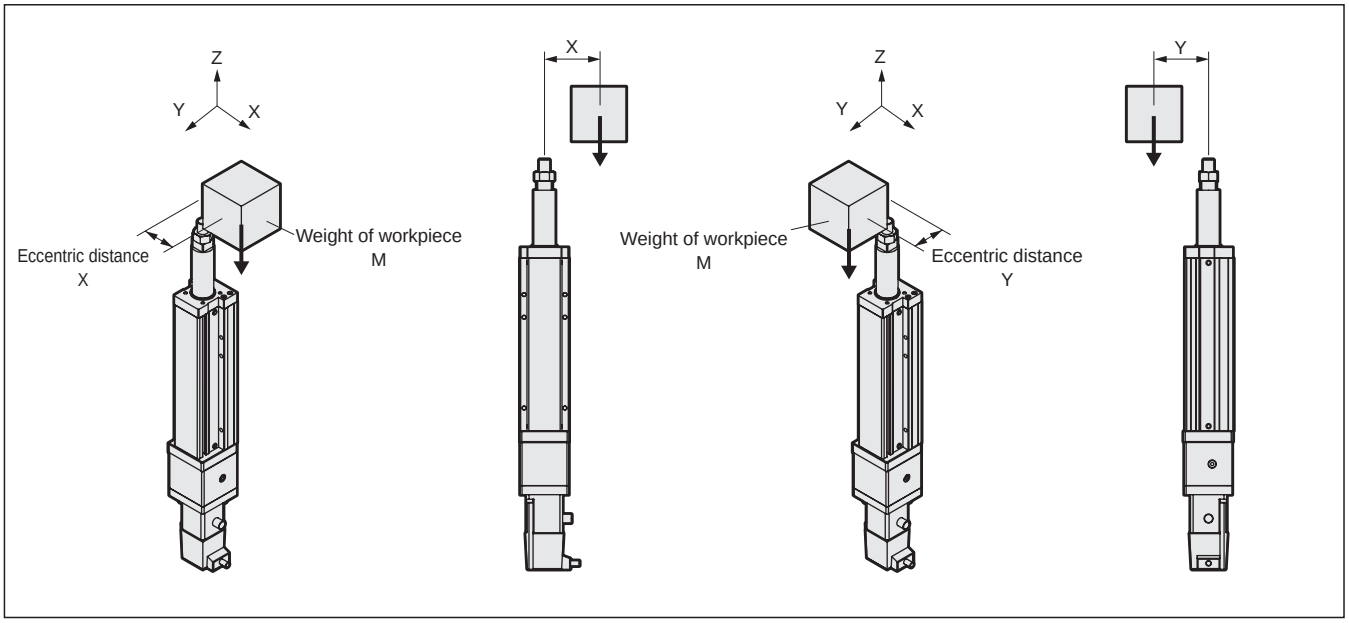

[EBR-04]

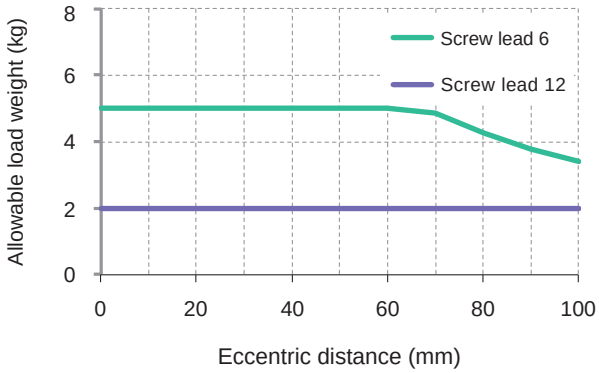

[EBR-05]

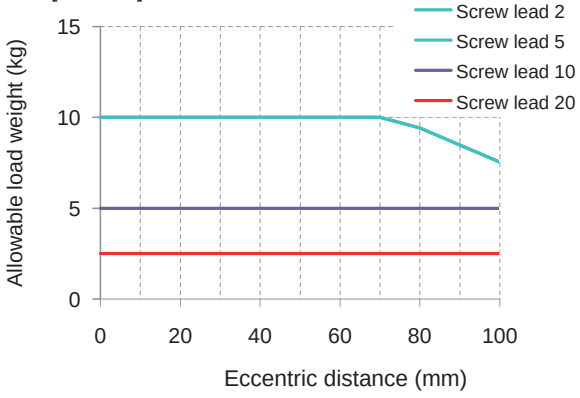

[EBR-08]

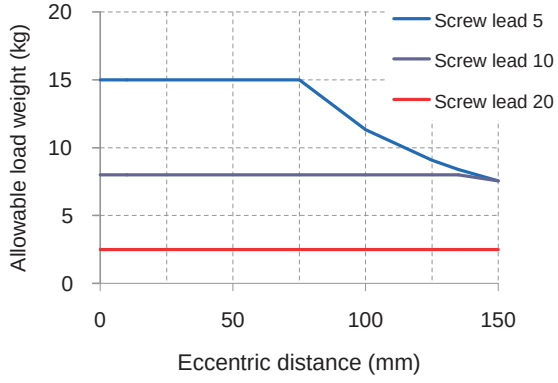

* Values are when the actuator operating life is 5,000km. (Acceleration/deceleration 0.5G, speed 300mm/s)
Screw lead: 2 mm is the value when the travel life is 1,000km.

Rod end runout (EBR Series) *Reference value

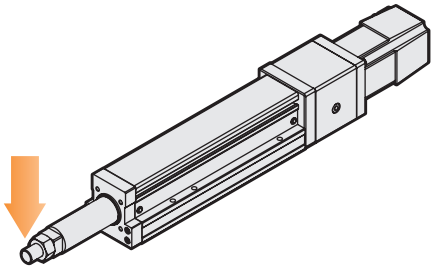

[EBR-04]

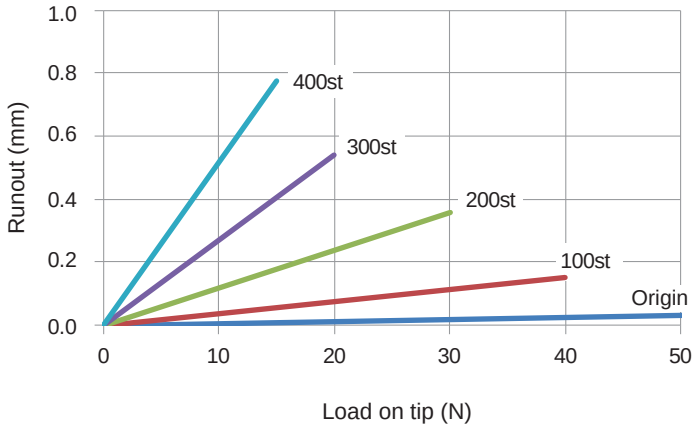

[EBR-05]

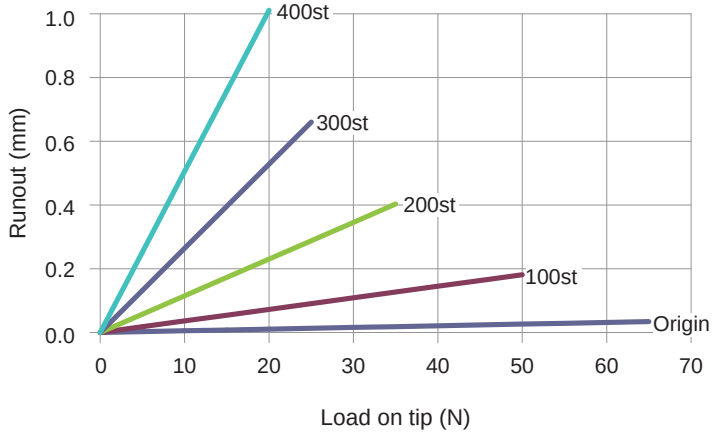

Rod end runout (EBR Series) *Reference value

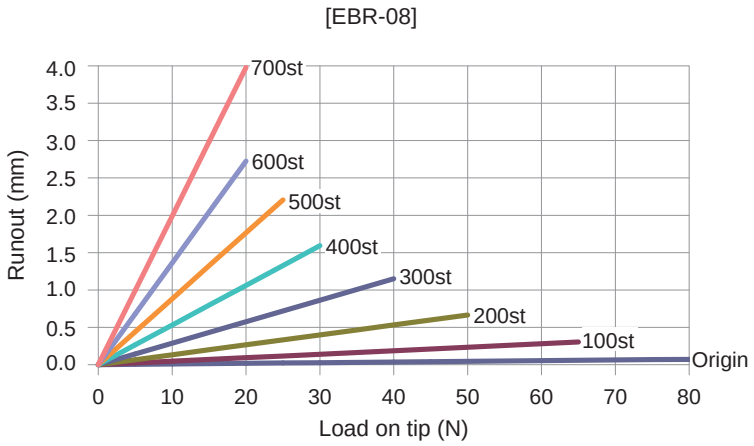

Origin sensor, limit sensor

[Specifications]

Item		Specifications
Manufacturer	Manufacturer	KITA
	Model	KT-32N-2M
Output method		NPN output
Load voltage		10 to 30 VDC
Load current		100 mA or less
Current consumption		17 mA at 24 DC
Internal voltage drop		Max. 1.5 V
Leakage current		Max. 0.01 mA
Indicator lamp		Red
Impact resistance		50G
Ambient temperature		-10 to 70°C
Degree of protection		IP67 IEC 60529 Standards
Cord length		2 m

Output circuit

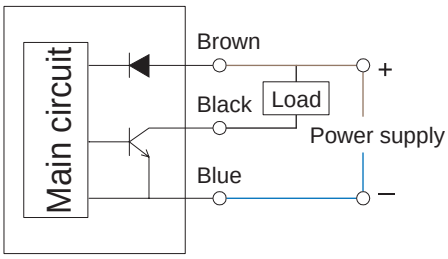

List of attachments

Motor mounting bolt (common motor mounting direction)

Model No.	Mounted motor specification	Motor size	Size	Quantity
EBR-04	A	□42	M3	4
	B		M3	4
EBR-05	A	□42	M3	4
	B		M3	4
EBR-08	A	□56 □60	M4	4
	B		M4	4
	C		M4	4

Coupling

Model No.	Attachment name	Quantity
LE (Motor mounting direction: Straight)	Coupling (Assembled at shipment)	1

Timing belt, pulley (motor side)

Model No.	Shipping format	Quantity
L* (Motor mounting on side/bottom)	Included at shipment *1	1 each

*1 The body side pulley is assembled.

Origin sensor, limit sensor

Model No.	Shipping format	Quantity
When "with" sensor is selected	Included at shipment	3 *1

*1 When "None" is selected for origin sensor or limit sensor, the other sensor is also "None".

Maintenance parts

Maintenance parts (origin sensor, limit sensor)

Model No. 	Compatibility	Part
EBR-SENSOR-N	All EBR models	Body

Maintenance parts (grease nozzle)

Model No. 	Compatibility
EBS-NOZZLE	All models

MEMO

Safety precautions

Stepper motor compatible				Servo motor compatible							
ECS	ETS	EBR	EBS	EKS	ECV	ETV	ECS	ETS Multi-Axis	ETS	EBR	EBS

ETS

Slider type (ball screw drive)

Stepper motor compatible electric actuator
Motorless specifications



CONTENTS

Product introduction	Intro
Series variation	584
● Specifications/How to order/Dimensions	
· ETS-05	588
· ETS-06	594
· ETS-10	600
· ETS-12	606
· ETS-13	612
· ETS-14	618
● Model selection	624
● Technical data	626
⚠ Safety precautions	686
Model Selection Check Sheet	708

Series variation

Type	Model No.		Applicable motor size	Body width (mm)	Screw lead (mm)	Max. load capacity (kg) *2 Horizontal *1	Max. load capacity (kg) *2 Vertical	Stroke (mm) and max. speed (mm/s) *3	Page
Slider		ETS-05	□42	51	2	10	7	50 100 150 200 250 300 350 400 450 500 550 600 650 700 750 800 850 900 950 1000 1050 1100 1150 1200 1250 1300 1350 1400 1450 1500 mm: 100 mm/s: 90 80 70 60 *4 13.53 sec	588
					5	10	3	250: 225 200 175 150 5.53 sec	
					10	5	1.5	500: 450 400 350 300 2.87 sec	
		ETS-06	□42	65	2	30	15	100: 90 80 70 60 13.53 sec	594
					5	30	10	250: 225 200 175 150 5.53 sec	
					10	15	5	500: 450 400 350 300 2.87 sec	
		ETS-10	□56 □60	102	5	50	12	250: 225 200 175 150 125 8.6 sec	600
					10	30	8	500: 450 400 350 300 250 4.4 sec	
					16	22	5	800: 720 640 560 480 400 2.83 sec	
					20	18	3	1000: 900 800 700 600 500 2.3 sec	
		ETS-12	□56 □60	102	5	50	12	250: 225 200 175 150 125 8.6 sec	606
					10	30	8	500: 450 400 350 300 250 4.4 sec	
					16	22	5	800: 720 640 560 480 400 2.83 sec	
					20	18	3	1000: 900 800 700 600 500 2.3 sec	
		ETS-13	□56 □60	135	5	70	17	250: 225 200 175 150 125 8.6 sec	612
					10	47	12	500: 450 400 350 300 250 4.4 sec	
					16	30	6	800: 720 640 560 480 400 2.83 sec	
					20	24	4	1000: 900 800 700 600 500 2.3 sec	
		ETS-14	□56 □60	135	5	110	33	250: 225 200 175 150 125 8.6 sec	618
					10	88	22	500: 450 400 350 300 250 4.4 sec	
					16	48	10	800: 720 640 560 480 400 2.83 sec	
					20	40	8	1000: 900 800 700 600 500 2.3 sec	

*1: The load capacity when wall mounted is the same as for horizontal installation.
*2: The rated thrust and max. load capacity values are the allowable values for the actuator body; the actual thrust and load capacity are limited by the motor used.
*3: The max. speed is the speed when the motor mounted by the customer can output a rotation speed of 3000 rpm. The max. speed is restricted by the stroke. Do not move at speeds beyond the limit.
*4: ⏱ shows the positioning time. Maximum stroke when installed horizontally and operated at max. speed and max. acceleration/deceleration. Note that this is not the value at maximum load capacity.

How to order

How to order

ETS - 06 - 05 040 - E A A N C B D P - M - X

Ⓐ Body size

05	Body width 51 mm
06	Body width 65 mm
10	Body width 102 mm
12	Body width 102 mm
13	Body width 135 mm
14	Body width 135 mm

Ⓑ Screw lead

02	2 mm
05	5 mm
10	10 mm
16	16 mm
20	20 mm

Ⓒ Stroke length

005 to 105	50 mm (In 50 mm increments) 1050 mm

Ⓓ Motor mounting direction

E	Straight mounting
R	Right mounting
D	Bottom mounting
L	Left mounting

Ⓔ Mounted motor specification

A	Refer to the list on the page at right
B	
C	

Ⓕ Motor size

A	□42
B	□56
C	□60

Ⓖ Brake

N	None

Ⓗ Origin sensor (1 pc) *1

N	None
A	Inside motor side
B	Inside motor opposite side
C	Outside motor side (Included at shipment)
D	Outside motor opposite side (Included at shipment)

Ⓘ Limit sensor (2 pcs) *1

N	None
A	Inside
B	Outside

Ⓙ Grease nipple

N	None (Body mounting direction: Standard)
D	None (Body mounting direction: Bottom side)
R	Right
L	Counterclockwise

Ⓚ Positioning pin hole

N	None
P	Yes

Ⓛ Magnet slider method *2

	Standard
M	Yes

Ⓜ Metal stopper specifications (ETS-X)

	Standard
X	Yes

*1: The sensor dog is assembled at shipment regardless of sensor presence.
*2: ETS-05/06 uses the magnet slider method.
Other sizes use the standard.

Example of model No.

ETS-06-05040-EAANCBDP-M-X

Ⓐ Body size : 06 Series
Ⓑ Screw lead : 5 mm
Ⓒ Stroke length : 400 mm
Ⓓ Motor mounting direction : Straight
Ⓔ Mounted motor specification : A (refer to the table on the page at right)
Ⓕ Motor size : □42
Ⓖ Brake : None
Ⓗ Origin sensor : External motor side
Ⓘ Limit sensor : Outside
Ⓙ Grease nipple : None (Body mounting method: Bottom side)
Ⓚ Positioning pin hole : Yes
Ⓛ Magnet slider method : Yes
Ⓜ Metal stopper specifications (ETS-X) : Yes

*This product is composed of an actuator (and motor mounting parts) only; there is no motor attached.
The user must prepare, mount, and adjust the motor and driver.

List of stepper motors recommended for mounting

Code	Manufacturer	Series	□42	□56	□60
A	Oriental Motor Co., Ltd.	AZ	AZM46□0□	-	AZM66□0□ AZM69□0□
		AR	ARM46□0□	-	ARM66□0□ ARM69□0□
B	MinebeaMitsumi Inc.	A17PM/A23KM	A17PM□□□□CSTBCN	A23KM□□□□CSTBCN	-
B	Dyadic Systems Co., Ltd.	RMJ	RMJ0411	-	-
C		RMJ	-	RMJ0611/RMJ1211	-

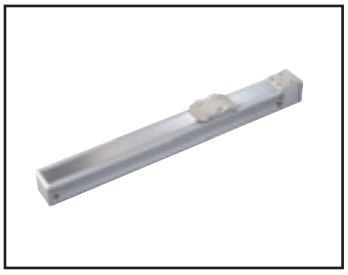

Electric actuator Ball screw drive Slider

ETS-05 Series

Straight motor mounting

● Stepper motor size: □42

How to order

ETS - 05 - 05 040 - E A A N C B N P - M

Ⓐ Body size

05	Body width 51 mm

Ⓑ Screw lead

02	2 mm
05	5 mm
10	10 mm

Ⓒ Stroke length

005 to 080	50 mm (In 50 mm increments) 800 mm

Ⓓ Motor mounting direction

E	Straight mounting

Ⓔ Mounted motor specification

A	Select the mounted motor specification from the table below.
B	

Ⓕ Motor size

A	□42

Ⓖ Brake

N	None

Ⓗ Origin sensor (1 pc) *1 *2

N	None
C	Outside motor side
D	Outside motor opposite side

Ⓘ Limit sensor (2 pcs) *1*2

N	None
B	Outside

Ⓙ Grease nipple *3

N	None (Body mounting direction: Standard)

Ⓚ Positioning pin hole

N	None
P	Yes

Ⓛ Magnet slider method

M	Yes

Manufacturer	□42
Oriental Motor Co., Ltd.	A
MinebeaMitsumi Inc.	B
Dyadic Systems Co., Ltd.	B

*Refer to page 587 for the motor model No.

*1: Origin sensor and limit sensor are available as a set. As it is both-or-nothing, select "None" for both.
*2: The user can adjust the sensor position. (Included at shipment)
*3: "Body mounting direction: Standard" here refers to mounting from the bottom side.

Specifications

Applicable motor sizes		□42 Stepper motor		
Drive method		Ball screw ø12		
Ball screw accuracy grade		C7		
Stroke length	mm	50 to 800		
Screw lead	mm	2	5	10
Max. load capacity *1	Horizontal kg	10	10	5
	Vertical kg	7	3	1.5
Max. speed	mm/s	100	250	500
Rated thrust *1	N	854	341	170
Repeatability	mm	±0.01		
Lost motion	mm	0.1 or less		
Drive system weight	kg	0.3		
Other inertia	kg·cm²	0.024		
Coefficient of friction		0.05		
Mechanical efficiency		0.8		
Ball screw length		Stroke + 200		
Dynamic allowable load	N	551		
Static allowable moment	N·m	MP: 20, MY: 16, MR: 19		
Dynamic allowable moment	N·m	MP: 2.8, MY: 2.8, MR: 6.8		
Operating ambient temperature, humidity		0 to 40°C (no freezing) 35 to 80% RH (no condensation)		
Storage ambient temperature, humidity		-10 to 50°C (no freezing) 35 to 80% RH (no condensation)		
Atmosphere		No corrosive gas, explosive gas, or dust		

*1 The rated thrust and max. load capacity values are the allowable values for the actuator body; the actual thrust and load capacity are limited by the motor used.

Stroke and max. speed

(mm/s)

Screw lead \ Stroke length	100 to 600	650	700	750	800
2	100	90	80	70	60
5	250	225	200	175	150
10	500	450	400	350	300

*The max. speed is the speed when the motor mounted by the customer can output a rotation speed of 3000 rpm.

Allowable overhang length

*Refer to page 626 for details.

Moment direction

MP MY MR

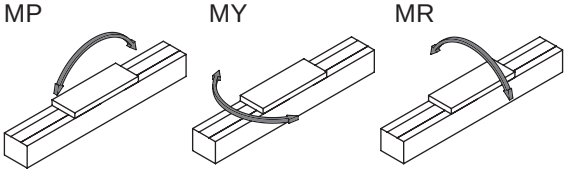

Dimensions Straight motor mounting

● ETS-05-*****-E

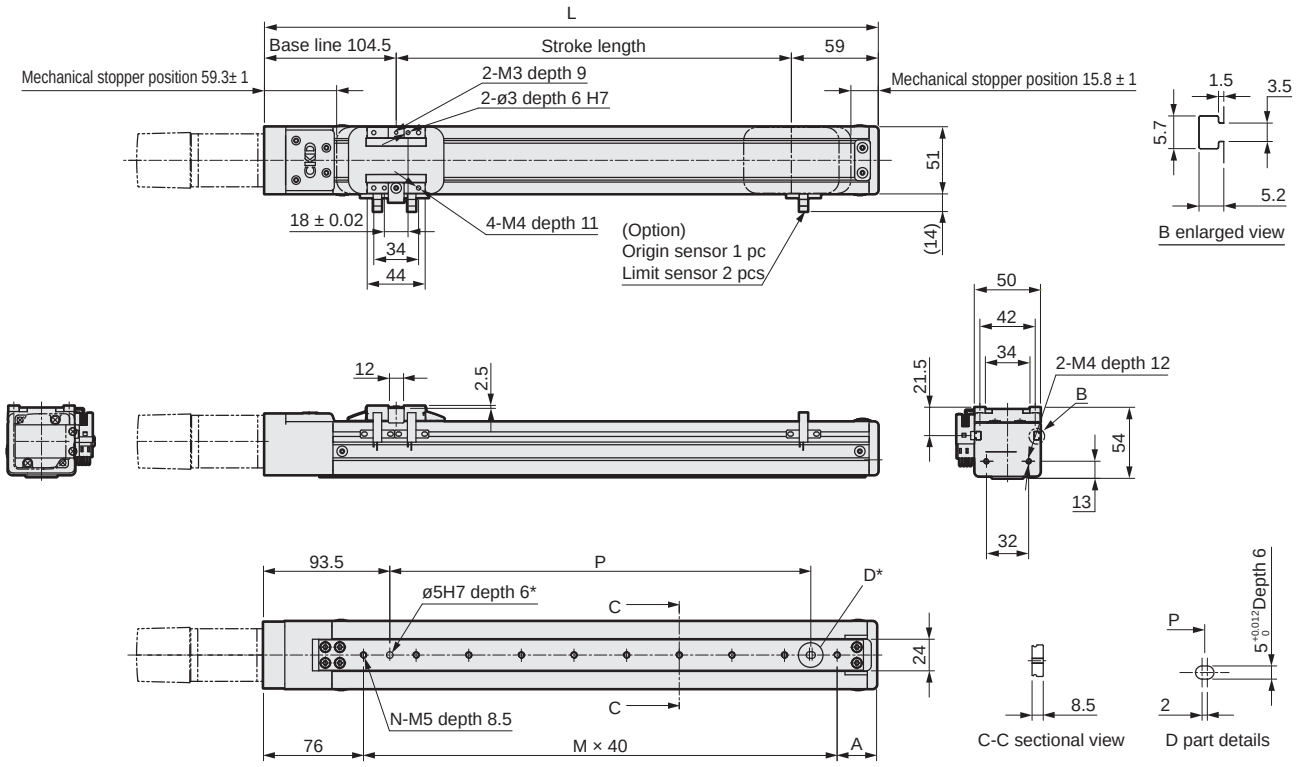

*Positioning pin hole (option)

Stroke length (mm)	50	100	150	200	250	300	350	400	450	500	550	600	650	700	750	800
L	213.5	263.5	313.5	363.5	413.5	463.5	513.5	563.5	613.5	663.5	713.5	763.5	813.5	863.5	913.5	963.5
A	60	30	40	50	60	30	40	50	60	30	40	50	60	30	40	50
M	2	4	5	6	7	9	10	11	12	14	15	16	17	19	20	21
N	3	5	6	7	8	10	11	12	13	15	16	17	18	20	21	22
P	40	120	160	200	240	320	360	400	440	520	560	600	640	720	760	800
Weight (kg)	1.5	1.6	1.7	1.8	1.9	2.1	2.2	2.2	2.4	2.5	2.6	2.7	2.8	2.9	3.0	3.1

Motor mounting part

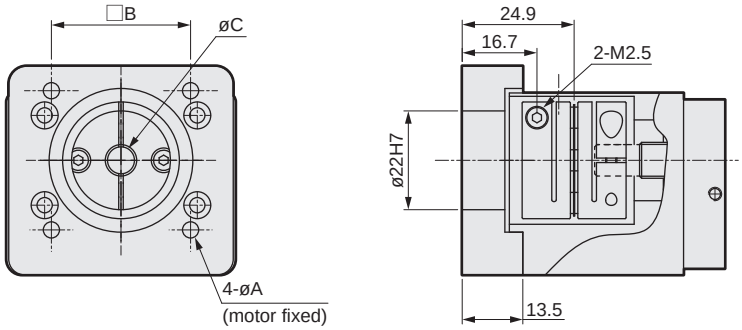

Mounted motor specification	A	B	C	Motor mounting bolt
A	3.6	31	6	4-M3 × L16
B	3.6	31	5	4-M3 × L16

List of attachments

[Motor mounting parts]

Mounted motor specification	Coupling	Motor size	Motor mounting bolt	
			Size	Quantity
A	Assembled at shipment	□42	M3	4
B			M3	4

[Origin sensor/Limit sensor]

Manufacturer	Model	Quantity
OMRON Corporation	EE-SX672	3

*Refer to page 630 for sensor specifications.



Electric actuator Ball screw drive Slider

ETS-05 Series

Motor side mounting (left, right, bottom)

● Stepper motor size: □42

How to order

ETS - 05 (A) - 05 (B) 040 (C) - R (D) A (E) A (F) N (G) C (H) B (I) N (J) P (K) - M (L)

Ⓐ Body size

05	Body width 51 mm

Ⓑ Screw lead

02	2 mm
05	5 mm
10	10 mm

Ⓒ Stroke length

005 to 080	50 mm (In 50 mm increments) 800 mm

Ⓓ Motor mounting direction

R	Right mounting
D	Bottom mounting
L	Left mounting

Ⓔ Mounted motor specification

A	Select the mounted motor specification from the table below.
B	

Ⓕ Motor size

A	□42

Ⓖ Brake

N	None

Ⓗ Origin sensor (1 pc) *1 *2

N	None
C	Outside motor side
D	Outside motor opposite side

Ⓘ Limit sensor (2 pcs) *1*2

N	None
B	Outside

Ⓙ Grease nipple *3

N	None (Body mounting direction: Standard)

Ⓚ Positioning pin hole

N	None
P	Yes

Ⓛ Magnet slider method

M	Yes

Manufacturer	□42
Oriental Motor Co., Ltd.	A
MinebeaMitsumi Inc.	B
Dyadic Systems Co., Ltd.	B

*Refer to page 587 for the motor model No.

*1: Origin sensor and limit sensor are available as a set. As it is both-or-nothing, select "None" for both.
*2: The user can adjust the sensor position. (Included at shipment)
*3: "Body mounting direction: Standard" here refers to mounting from the bottom side.

Specifications

Applicable motor sizes		□42 Stepper motor		
Drive method		Ball screw ø12		
Ball screw accuracy grade		C7		
Stroke length	mm	50 to 800		
Screw lead	mm	2	5	10
Max. load capacity *1	Horizontal kg	10	10	5
	Vertical kg	7	3	1.5
Max. speed	mm/s	100	250	500
Rated thrust *1	N	854	341	170
Repeatability	mm	±0.01		
Lost motion	mm	0.1 or less		
Drive system weight	kg	0.3		
Other inertia	kg·cm²	0.120		
Coefficient of friction		0.05		
Mechanical efficiency		0.8		
Ball screw length		Stroke + 200		
Dynamic allowable load	N	551		
Static allowable moment	N·m	MP: 20, MY: 16, MR: 19		
Dynamic allowable moment	N·m	MP: 2.8, MY: 2.8, MR: 6.8		
Operating ambient temperature, humidity		0 to 40°C (no freezing) 35 to 80% RH (no condensation)		
Storage ambient temperature, humidity		-10 to 50°C (no freezing) 35 to 80% RH (no condensation)		
Atmosphere		No corrosive gas, explosive gas, or dust		

*1 The rated thrust and max. load capacity values are the allowable values for the actuator body; the actual thrust and load capacity are limited by the motor used.

Stroke and max. speed

(mm/s)

Screw lead \ Stroke length	100 to 600	650	700	750	800
2	100	90	80	70	60
5	250	225	200	175	150
10	500	450	400	350	300

*The max. speed is the speed when the motor mounted by the customer can output a rotation speed of 3000 rpm.

Allowable overhang length

*Refer to page 626 for details.

Moment direction

MP MY MR

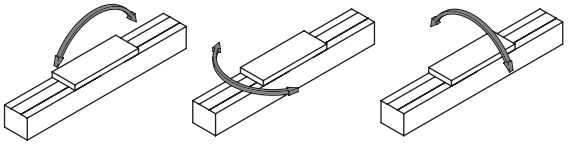

Dimensions Motor right-side mounting

● ETS-05-*****-R

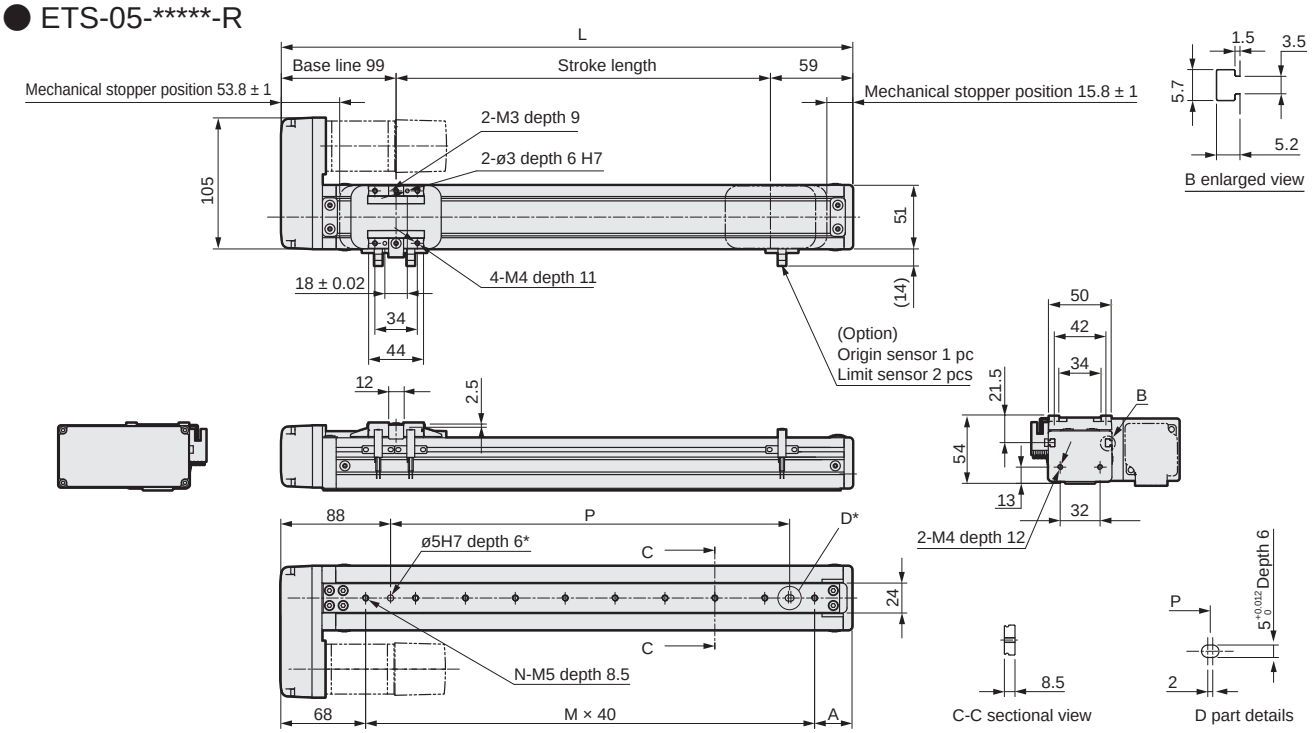

*Positioning pin hole (option)

Stroke length (mm)	50	100	150	200	250	300	350	400	450	500	550	600	650	700	750	800
L	208	258	308	358	408	458	508	558	608	658	708	758	808	858	908	958
A	60	30	40	50	60	30	40	50	60	30	40	50	60	30	40	50
M	2	4	5	6	7	9	10	11	12	14	15	16	17	19	20	21
N	3	5	6	7	8	10	11	12	13	15	16	17	18	20	21	22
P	40	120	160	200	240	320	360	400	440	520	560	600	640	720	760	800
Weight (kg)	1.7	1.8	1.9	2.0	2.1	2.3	2.4	2.4	2.6	2.7	2.8	2.9	3.0	3.1	3.2	3.3

Motor mounting part

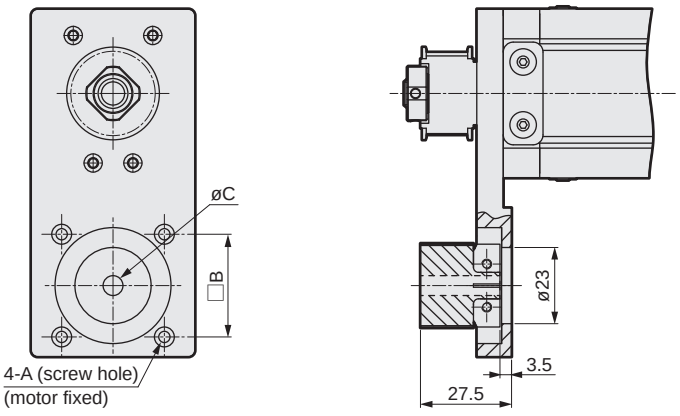

Mounted motor specification	A	B	C	Motor mounting bolt
A	ø3.4	31	6	4-M3 × L14
B	ø3.4	31	5	4-M3 × L14

List of attachments

[Motor mounting parts]

Mounted motor specification	Timing belt, Pulley	Motor size	Motor mounting bolt	
			Size	Quantity
A	Included at shipment	□42	M3	4
B			M3	4

[Origin sensor/Limit sensor]

Manufacturer	Model	Quantity
OMRON Corporation	EE-SX672	3

*Refer to page 630 for sensor specifications.

Dimensions Motor bottom mounting

● ETS-05-*****-D

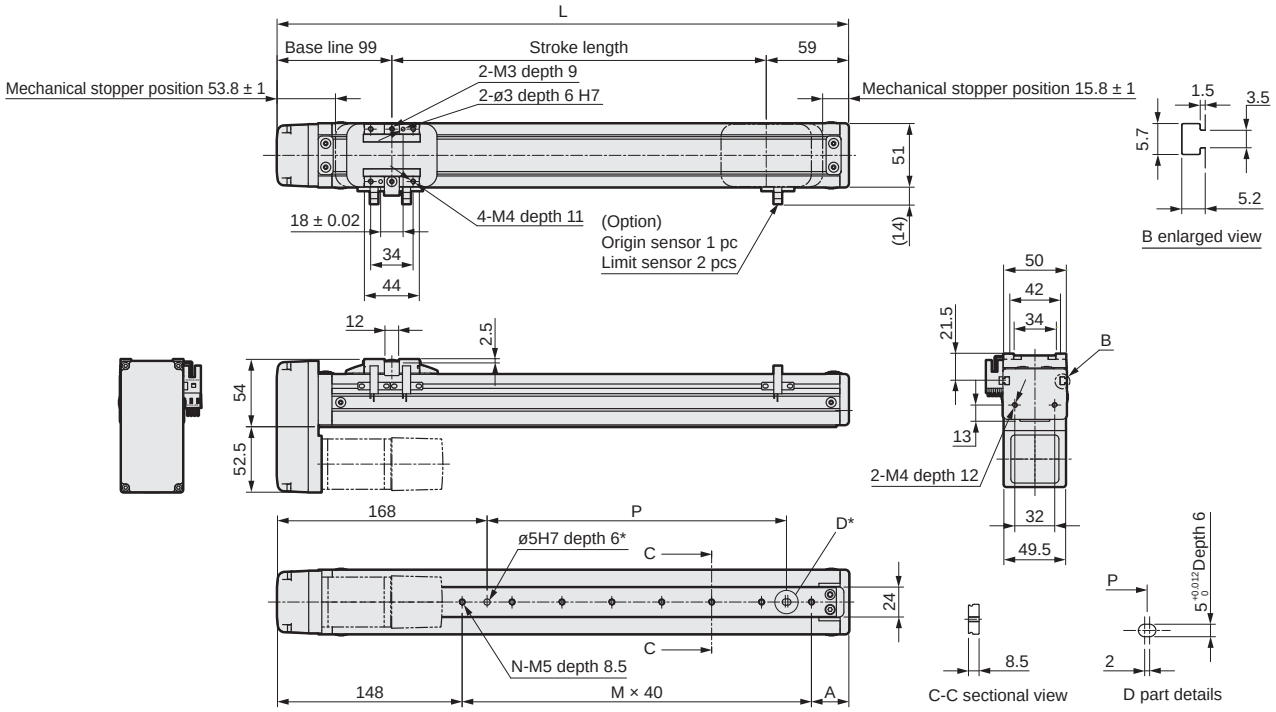

*Positioning pin hole (option)

Stroke length (mm)	50	100	150	200	250	300	350	400	450	500	550	600	650	700	750	800
L	208	258	308	358	408	458	508	558	608	658	708	758	808	858	908	958
A	60	30	40	50	60	30	40	50	60	30	40	50	60	30	40	50
M	0	2	3	4	5	7	8	9	10	12	13	14	15	17	18	19
N	1	3	4	5	6	8	9	10	11	13	14	15	16	18	19	20
P	0	40	80	120	160	240	280	320	360	440	480	520	560	640	680	720
Weight (kg)	1.7	1.8	1.9	2.0	2.1	2.3	2.4	2.4	2.6	2.7	2.8	2.9	3.0	3.1	3.2	3.3

Motor mounting part

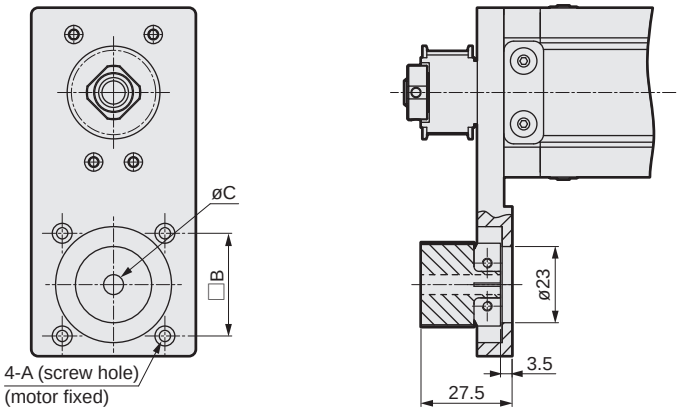

Mounted motor specification	A	B	C	Motor mounting bolt
A	ø3.4	31	6	4-M3 × L14
B	ø3.4	31	5	4-M3 × L14

List of attachments

[Motor mounting parts]

Mounted motor specification	Timing belt, pulley	Motor size	Motor mounting bolt	
			Size	Quantity
A	Included at shipment	□42	M3	4
B			M3	4

[Origin sensor/Limit sensor]

Manufacturer	Model	Quantity
OMRON Corporation	EE-SX672	3

*Refer to page 630 for sensor specifications.

Dimensions Motor left-side mounting

● ETS-05-*****-L

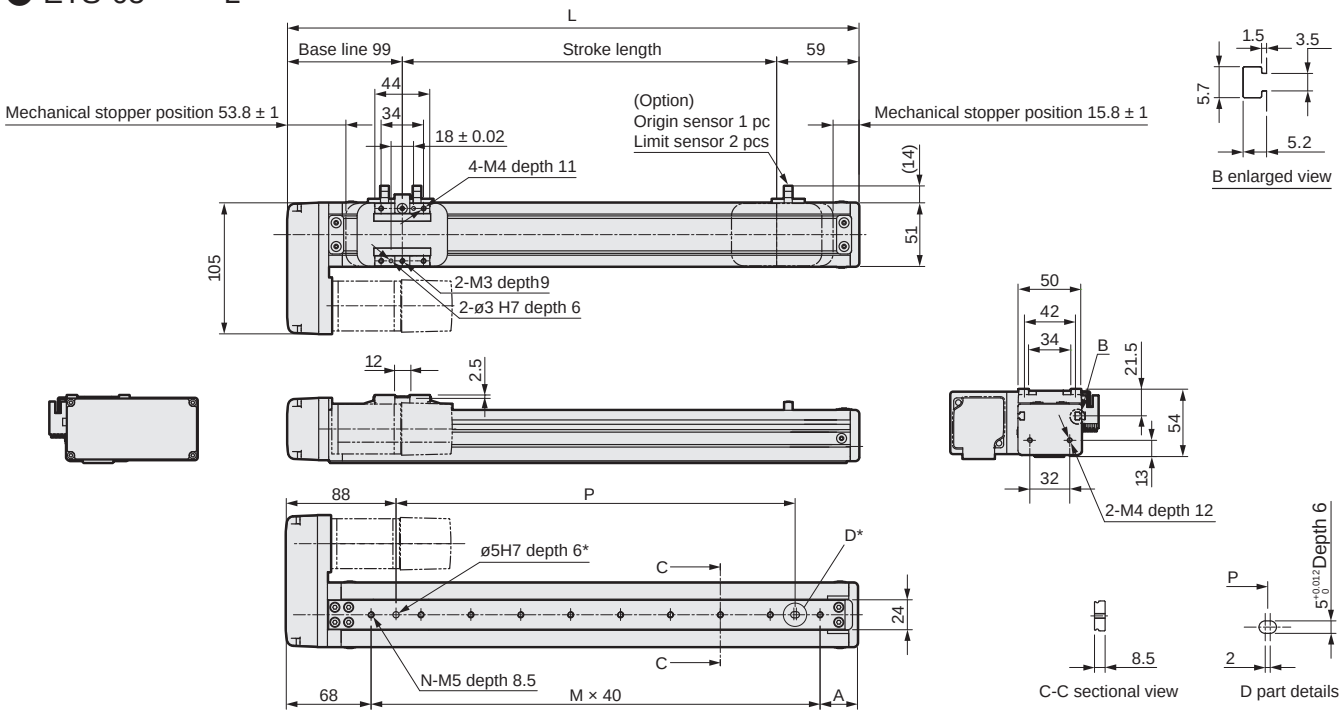

*Positioning pin hole (option)

Stroke length (mm)	50	100	150	200	250	300	350	400	450	500	550	600	650	700	750	800
L	208	258	308	358	408	458	508	558	608	658	708	758	808	858	908	958
A	60	30	40	50	60	30	40	50	60	30	40	50	60	30	40	50
M	2	4	5	6	7	9	10	11	12	14	15	16	17	19	20	21
N	3	5	6	7	8	10	11	12	13	15	16	17	18	20	21	22
P	40	120	160	200	240	320	360	400	440	520	560	600	640	720	760	800
Weight (kg)	1.7	1.8	1.9	2.0	2.1	2.3	2.4	2.4	2.6	2.7	2.8	2.9	3.0	3.1	3.2	3.3

Motor mounting part

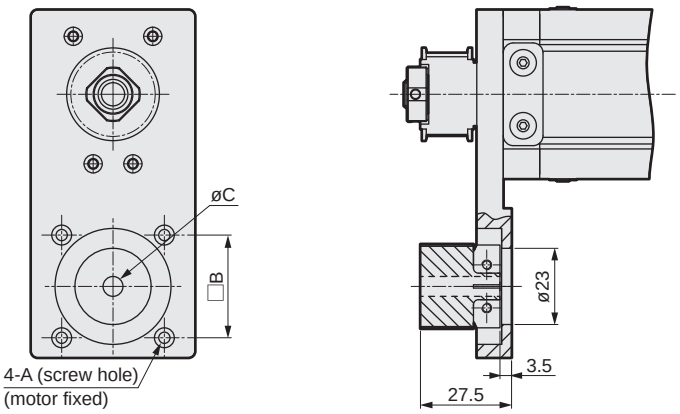

Mounted motor specification	A	B	C	Motor mounting bolt
A	ø3.4	31	6	4-M3 × L14
B	ø3.4	31	5	4-M3 × L14

List of attachments

[Motor mounting parts]

Mounted motor specification	Timing belt, Pulley	Motor size	Motor mounting bolt	
			Size	Quantity
A	Included at shipment	□42	M3	4
B			M3	4

[Origin sensor/Limit sensor]

Manufacturer	Model	Quantity
OMRON Corporation	EE-SX672	3

*Refer to page 630 for sensor specifications.

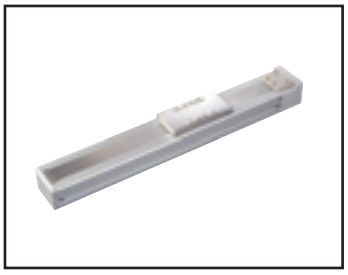

Electric actuator Ball screw drive Slider

ETS-06 Series

Straight motor mounting

● Stepper motor size: □42

How to order

ETS - 06 - 05 - 040 - E A A N C B D P - M - X

(A) (B) (C) (D) (E) (F) (G) (H) (I) (J) (K) (L) (M)

(A) Body size

06	Body width 65 mm

(B) Screw lead

02	2 mm
05	5 mm
10	10 mm

(C) Stroke length

005 to 080	50 mm (In 50 mm increments) 800 mm

(D) Motor mounting direction

E	Straight mounting

(E) Mounted motor specification

A	Select the mounted motor specification from the table below.
B	

(F) Motor size

A	□42

(G) Brake

N	None

(H) Origin sensor (1 pc) *1 *2

N	None
C	Outside motor side
D	Outside motor opposite side

(I) Limit sensor (2 pcs) *1 *2

N	None
B	Outside

(J) Grease nipple *3 *4

N	None (Body mounting direction: Standard)
D	None (Body mounting direction: Bottom side)

(K) Positioning pin hole

N	None
P	Yes

(L) Magnet slider method

M	Yes

(M) Metal stopper specifications (ETS-X)

	Standard
X	Yes

Manufacturer	□42
Oriental Motor Co., Ltd.	A
MinebeaMitsumi Inc.	B
Dyadic Systems Co., Ltd.	B

*Refer to page 587 for the motor model No.

*1: Origin sensor and limit sensor are available as a set. As it is both-or-nothing, select "None" for both.
*2: The user can adjust the sensor position. (Included at shipment)
*3: Select the body mounting direction. N (top side ø4.5 spot face) or D (M5 from bottom side bottom surface)
*4: "Body mounting direction: Standard" here refers to mounting from the top.

Specifications

Applicable motor sizes		□42 Stepper motor		
Drive method		Ball screw ø12		
Ball screw accuracy grade		C7		
Stroke length	mm	50 to 800		
Screw lead	mm	2	5	10
Max. load capacity *1	Horizontal kg	30	30	15
	Vertical kg	15	10	5
Max. speed	mm/s	100	250	500
Rated thrust *1	N	427	171	85
Repeatability	mm	±0.01		
Lost motion	mm	0.1 or less		
Drive system weight	kg	0.5		
Other inertia	kg·cm²	0.024		
Coefficient of friction		0.05		
Mechanical efficiency		0.8		
Ball screw length		Stroke + 200		
Dynamic allowable load	N	1209		
Static allowable moment	N·m	MP: 80, MY: 70, MR: 75		
Dynamic allowable moment	N·m	MP: 8.9, MY: 8.9, MR: 24.8		
Operating ambient temperature, humidity		0 to 40°C (no freezing) 35 to 80% RH (no condensation)		
Storage ambient temperature, humidity		-10 to 50°C (no freezing) 35 to 80% RH (no condensation)		
Atmosphere		No corrosive gas, explosive gas, or dust		

*1 The rated thrust and max. load capacity values are the allowable values for the actuator body; the actual thrust and load capacity are limited by the motor used.

Stroke and max. speed

(mm/s)

Screw lead \ Stroke length	100 to 600	650	700	750	800
2	100	90	80	70	60
5	250	225	200	175	150
10	500	450	400	350	300

*The max. speed is the speed when the motor mounted by the customer can output a rotation speed of 3000 rpm.

Allowable overhang length

*Refer to page 626 for details.

Moment direction

MP MY MR

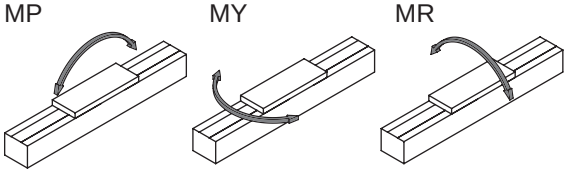

Dimensions Straight motor mounting

● ETS-06-*****-E

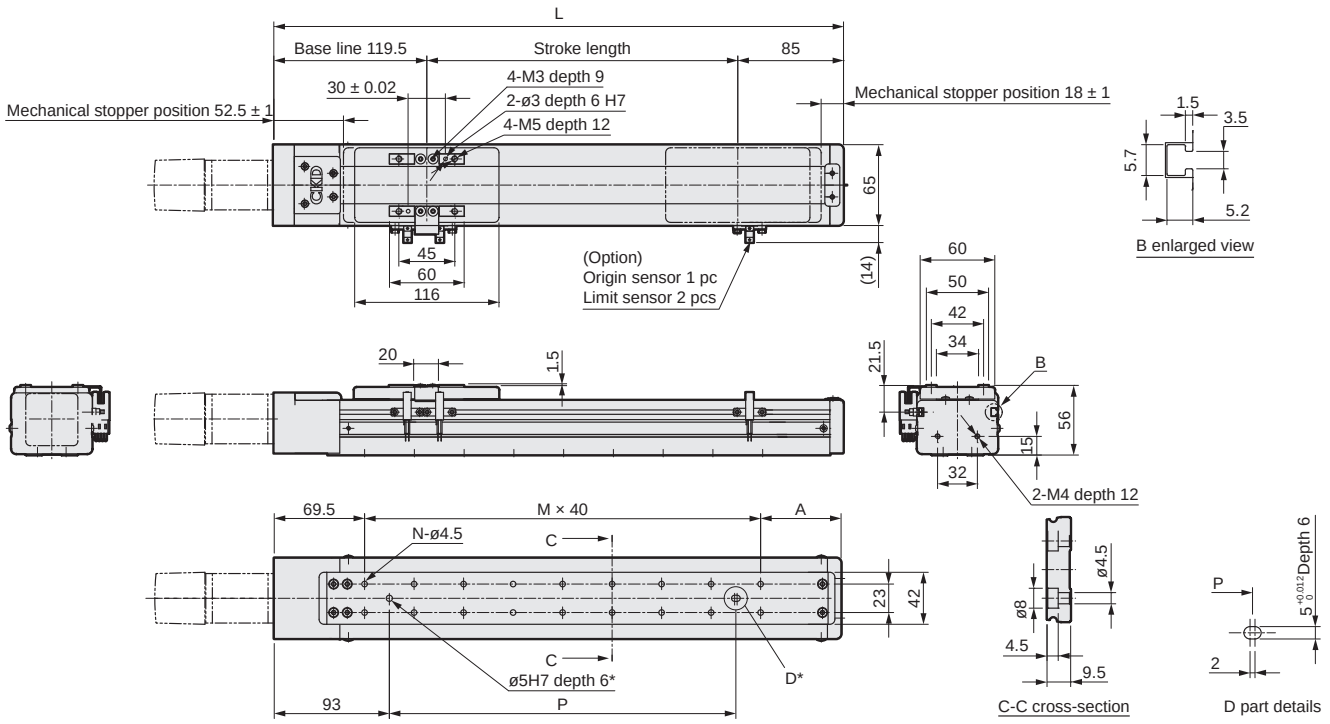

*Positioning pin hole (option)

Stroke length (mm)	50	100	150	200	250	300	350	400	450	500	550	600	650	700	750	800
L	254.5	304.5	354.5	404.5	454.5	504.5	554.5	604.5	654.5	704.5	754.5	804.5	854.5	904.5	954.5	1004.5
A	65	35	45	55	65	35	45	55	65	35	45	55	65	35	45	55
M	3	5	6	7	8	10	11	12	13	15	16	17	18	20	21	22
N	8	12	14	16	18	22	24	26	28	32	34	36	38	42	44	46
P	80	160	200	240	280	360	400	440	480	560	600	640	680	760	800	840
Weight (kg)	2.0	2.1	2.2	2.4	2.6	2.8	3.0	3.1	3.3	3.5	3.7	3.8	4.0	4.2	4.4	4.5

*N-M5 when ❶ Grease nipple is D.

Motor mounting part

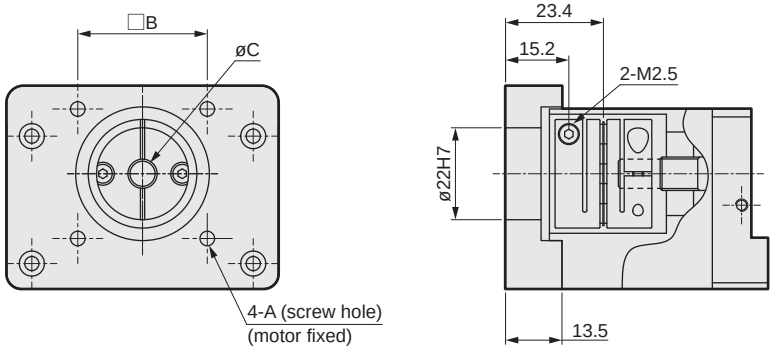

Mounted motor specification	A	B	C	Motor mounting bolt
A	3.5	31	6	4-M3 × L16
B	3.5	31	5	4-M3 × L16

List of attachments

[Motor mounting parts]

Mounted motor specification	Coupling	Motor size	Motor mounting bolt	
			Size	Quantity
A	Assembled at shipment	□42	M3	4
B			M3	4

[Origin sensor/Limit sensor]

Manufacturer	Model	Quantity
OMRON Corporation	EE-SX672	3

*Refer to page 630 for sensor specifications.



Electric actuator Ball screw drive Slider

ETS-06 Series

Motor side mounting (left, right, bottom)

● Stepper motor size: □42

How to order

ETS - 06 - 05 - 040 - R A A N C B D P - M - X

(A) (B) (C) (D) (E) (F) (G) (H) (I) (J) (K) (L) (M)

(A) Body size

06	Body width 65 mm

(B) Screw lead

02	2 mm
05	5 mm
10	10 mm

(C) Stroke length

005 to 080	50 mm (In 50 mm increments) 800 mm

(D) Motor mounting direction

R	Right mounting
D	Bottom mounting
L	Left mounting

(E) Mounted motor specification

A	Select the mounted motor specification from the table below.
B	

(F) Motor size *1

A	□42

(G) Brake

N	None

(H) Origin sensor (1 pc) *1 *2

N	None
C	Outside motor side
D	Outside motor opposite side

(I) Limit sensor (2 pcs) *1 *2

N	None
B	Outside

(J) Grease nipple *3 *4

N	None (Body mounting direction: Standard)
D	None (Body mounting direction: Bottom side)

(K) Positioning pin hole

N	None
P	Yes

(L) Magnet slider method

M	Yes

(M) Metal stopper specifications (ETS-X)

	Standard
X	Yes

Manufacturer	□42
Oriental Motor Co., Ltd.	A
MinebeaMitsumi Inc.	B
Dyadic Systems Co., Ltd.	B

*Refer to page 587 for the motor model No.

*1: Origin sensor and limit sensor are available as a set. As it is both-or-nothing, select "None" for both.
*2: The user can adjust the sensor position. (Included at shipment)
*3: Select the body mounting direction. N (top side ø4.5 spot face) or D (M5 from bottom side bottom surface)
*4: "Body mounting direction: Standard" here refers to mounting from the top.

Specifications

Applicable motor sizes		□42 Stepper motor		
Drive method		Ball screw ø12		
Ball screw accuracy grade		C7		
Stroke length	mm	50 to 800		
Screw lead	mm	2	5	10
Max. load capacity *1	Horizontal kg	30	30	15
	Vertical kg	15	10	5
Max. speed	mm/s	100	250	500
Rated thrust *1	N	427	171	85
Repeatability	mm	±0.01		
Lost motion	mm	0.1 or less		
Drive system weight	kg	0.5		
Other inertia	kg·cm²	0.120		
Coefficient of friction		0.05		
Mechanical efficiency		0.8		
Ball screw length		Stroke + 200		
Dynamic allowable load	N	1209		
Static allowable moment	N·m	MP: 80, MY: 70, MR: 75		
Dynamic allowable moment	N·m	MP: 8.9, MY: 8.9, MR: 24.8		
Operating ambient temperature, humidity		0 to 40°C (no freezing) 35 to 80% RH (no condensation)		
Storage ambient temperature, humidity		-10 to 50°C (no freezing) 35 to 80% RH (no condensation)		
Atmosphere		No corrosive gas, explosive gas, or dust		

*1 The rated thrust and max. load capacity values are the allowable values for the actuator body; the actual thrust and load capacity are limited by the motor used.

Stroke and max. speed

(mm/s)

Screw lead \ Stroke length	100 to 600	650	700	750	800
2	100	90	80	70	60
5	250	225	200	175	150
10	500	450	400	350	300

*The max. speed is the speed when the motor mounted by the customer can output a rotation speed of 3000 rpm.

Allowable overhang length

*Refer to page 626 for details.

Moment direction

MP MY MR

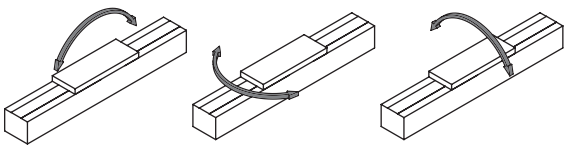

Dimensions Motor right-side mounting

● ETS-06-*****-R

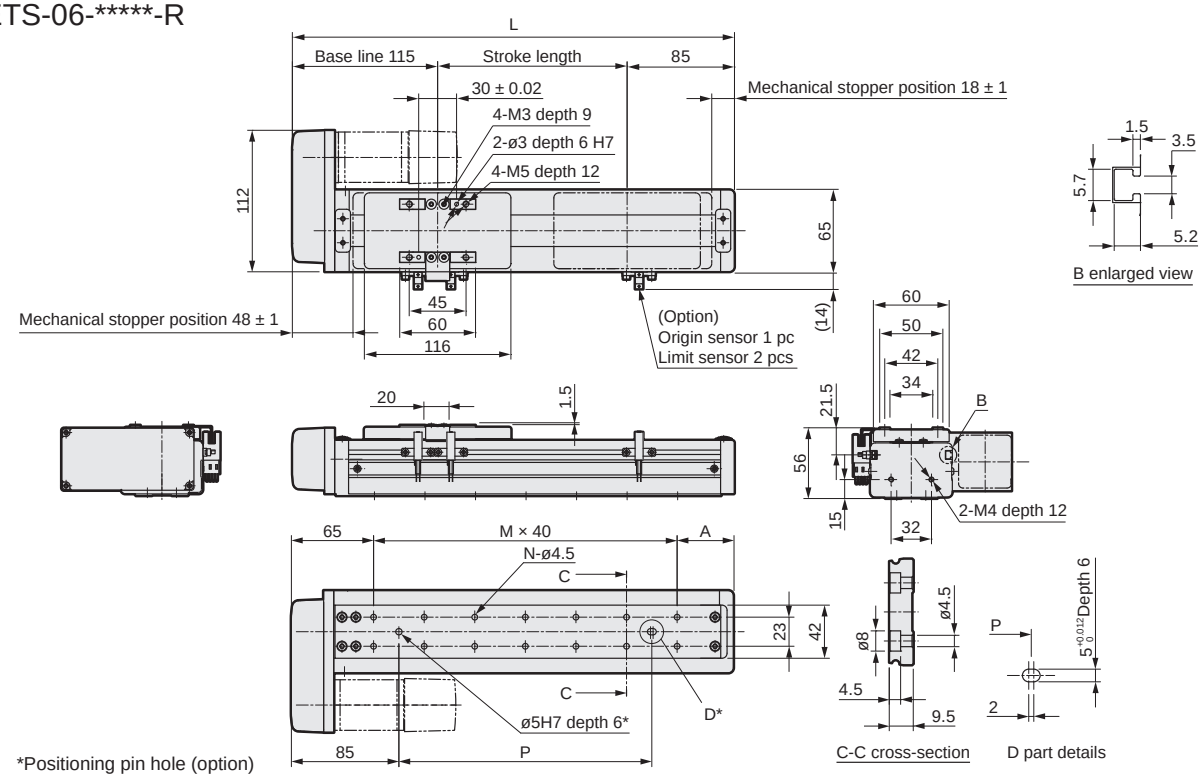

Stroke length (mm)	50	100	150	200	250	300	350	400	450	500	550	600	650	700	750	800
L	250	300	350	400	450	500	550	600	650	700	750	800	850	900	950	1000
A	65	35	45	55	65	35	45	55	65	35	45	55	65	35	45	55
M	3	5	6	7	8	10	11	12	13	15	16	17	18	20	21	22
N	8	12	14	16	18	22	24	26	28	32	34	36	38	42	44	46
P	80	160	200	240	280	360	400	440	480	560	600	640	680	760	800	840
Weight (kg)	2.1	2.3	2.4	2.6	2.8	3.0	3.2	3.3	3.5	3.7	3.9	4.0	4.2	4.4	4.6	4.7

*N-M5 when ❶ Grease nipple is D.

Motor mounting part

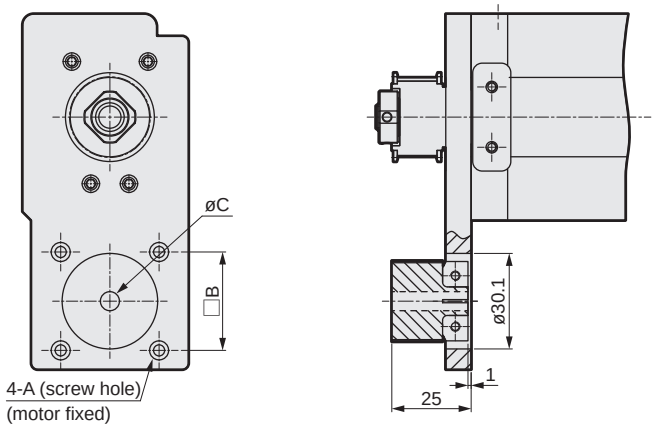

Mounted motor specification	A	B	C	Motor mounting bolt
A	ø3.5	31	6	4-M3 × L12
B	ø3.5	31	5	4-M3 × L12

List of attachments

[Motor mounting parts]

Mounted motor specification	Timing belt, pulley	Motor size	Motor mounting bolt	
			Size	Quantity
A	Included at shipment	□42	M3	4
B			M3	4

[Origin sensor/Limit sensor]

Manufacturer	Model	Quantity
OMRON Corporation	EE-SX672	3

*Refer to page 630 for sensor specifications.

Dimensions Motor bottom mounting

● ETS-06-*****-D

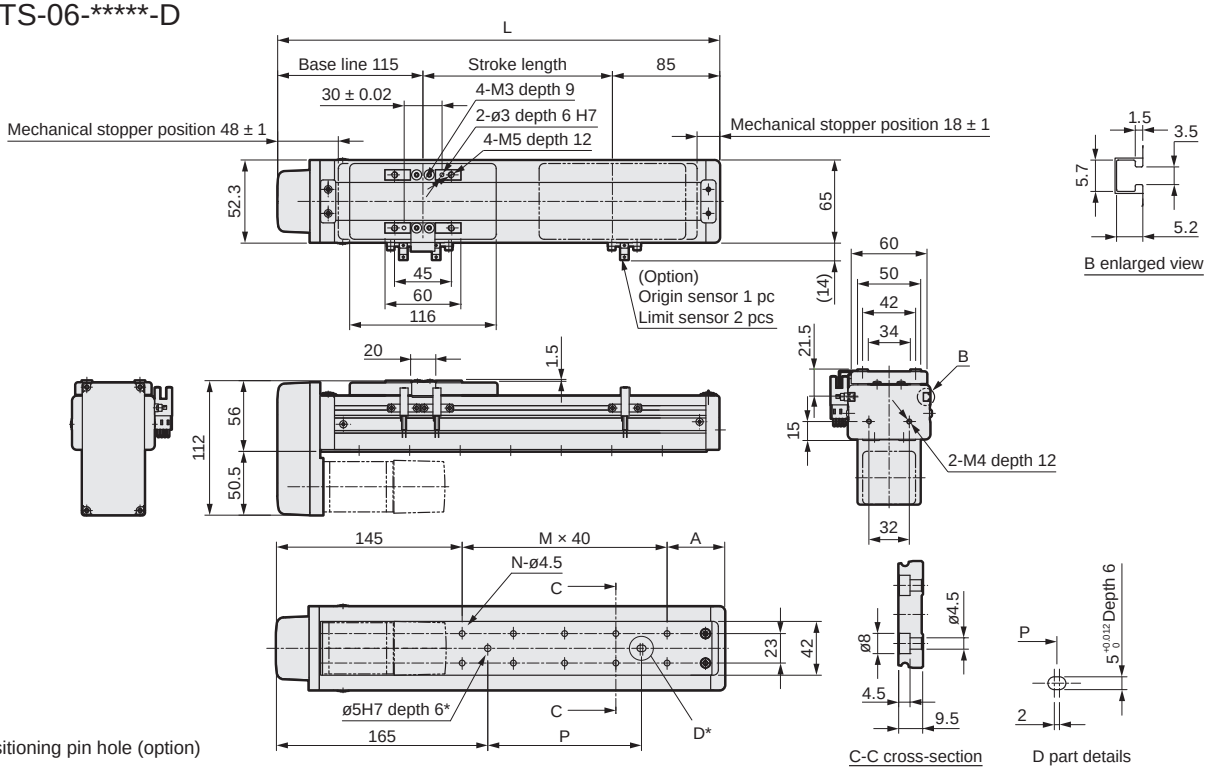

*Positioning pin hole (option)

Stroke length (mm)	50	100	150	200	250	300	350	400	450	500	550	600	650	700	750	800
L	250	300	350	400	450	500	550	600	650	700	750	800	850	900	950	1000
A	65	35	45	55	65	35	45	55	65	35	45	55	65	35	45	55
M	1	3	4	5	6	8	9	10	11	13	14	15	16	18	19	20
N	4	8	10	12	14	18	20	22	24	28	30	32	34	38	40	42
P	0	80	120	160	200	280	320	360	400	480	520	560	600	680	720	760
Weight (kg)	2.1	2.3	2.4	2.6	2.8	3.0	3.2	3.3	3.5	3.7	3.9	4.0	4.2	4.4	4.6	4.7

*N-M5 when ❶ Grease nipple is D.

Motor mounting part

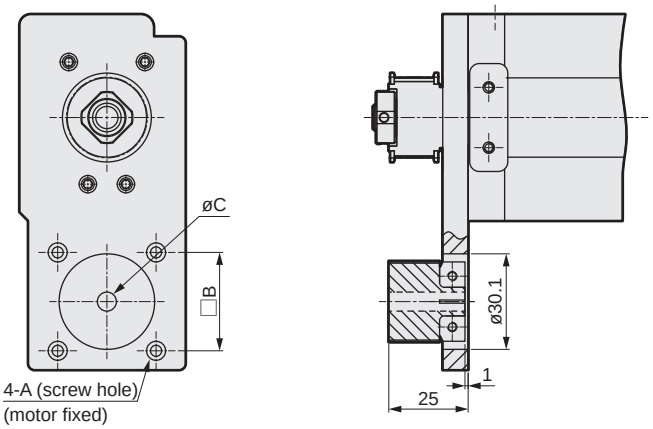

Mounted motor specification	A	B	C	Motor mounting bolt
A	ø3.5	31	6	4-M3 × L12
B	ø3.5	31	5	4-M3 × L12

List of attachments

[Motor mounting parts]

Mounted motor specification	Timing belt, pulley	Motor size	Motor mounting bolt	
			Size	Quantity
A	Included at shipment	□42	M3	4
B			M3	4

[Origin sensor/Limit sensor]

Manufacturer	Model	Quantity
OMRON Corporation	EE-SX672	3

*Refer to page 630 for sensor specifications.

Dimensions Motor left-side mounting

● ETS-06-*****-L

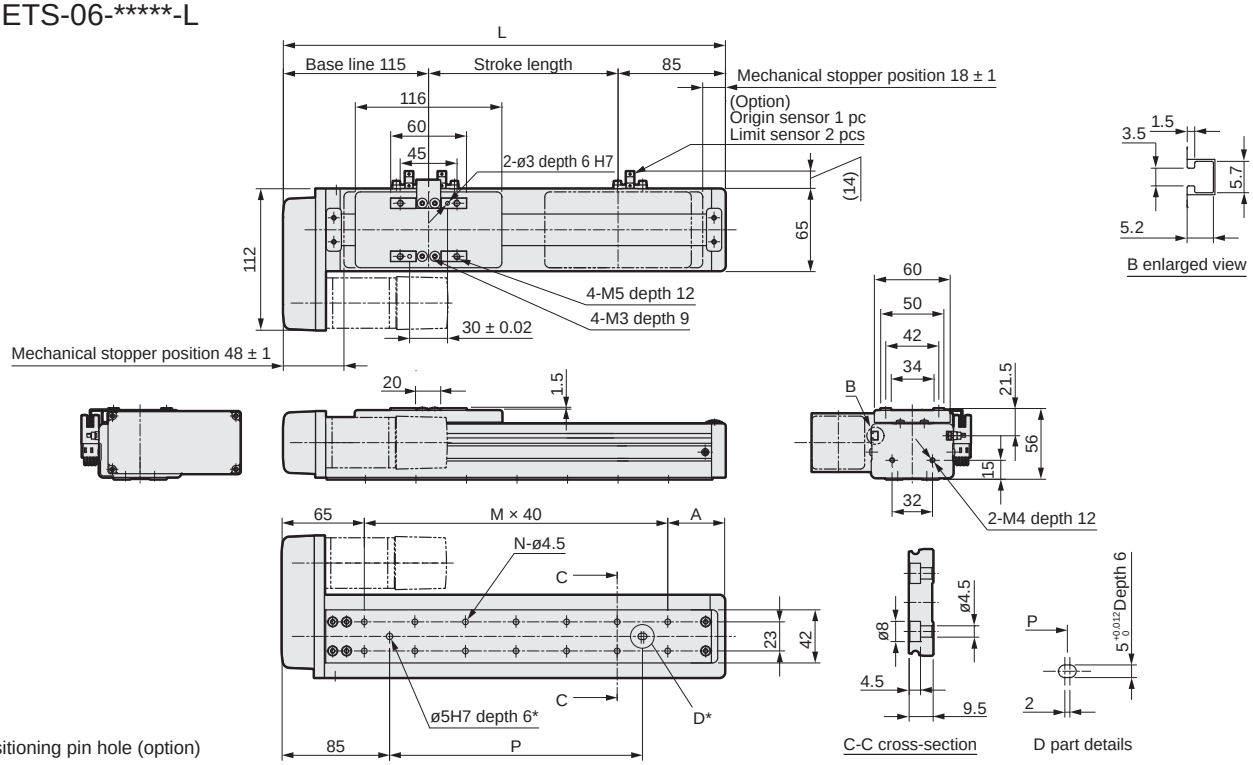

Stroke length (mm)	50	100	150	200	250	300	350	400	450	500	550	600	650	700	750	800
L	250	300	350	400	450	500	550	600	650	700	750	800	850	900	950	1000
A	65	35	45	55	65	35	45	55	65	35	45	55	65	35	45	55
M	3	5	6	7	8	10	11	12	13	15	16	17	18	20	21	22
N	8	12	14	16	18	22	24	26	28	32	34	36	38	42	44	46
P	80	160	200	240	280	360	400	440	480	560	600	640	680	760	800	840
Weight (kg)	2.1	2.3	2.4	2.6	2.8	3.0	3.2	3.3	3.5	3.7	3.9	4.0	4.2	4.4	4.6	4.7

*N-M5 when ❶ Grease nipple is D.

Motor mounting part

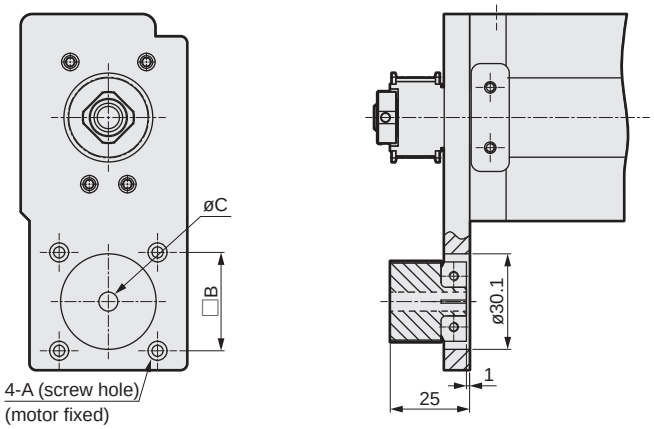

Mounted motor specification	A	B	C	Motor mounting bolt
A	ø3.5	31	6	4-M3 × L12
B	ø3.5	31	5	4-M3 × L12

List of attachments

[Motor mounting parts]

Mounted motor specification	Timing belt, pulley	Motor size	Motor mounting bolt	
			Size	Quantity
A	Included at shipment	□42	M3	4
B			M3	4

[Origin sensor/Limit sensor]

Manufacturer	Model	Quantity
OMRON Corporation	EE-SX672	3

*Refer to page 630 for sensor specifications.



Electric actuator Ball screw drive Slider

ETS-10 Series

Straight motor mounting

● Stepper motor size: □56, □60

How to order

ETS - 10 - 05 005 - E A A N N N N N - X

Ⓐ Body size

10	Body width 102 mm

Ⓑ Screw lead

05	5 mm
10	10 mm
16	16 mm
20	20 mm

Ⓒ Stroke length

005 to 105	50 mm (In 50 mm increments) 1050 mm

Ⓓ Motor mounting direction

E	Straight mounting

Ⓔ Mounted motor specification

A	Select the mounted motor specification from the table below.
B	
C	

Ⓕ Motor size

B	□56
C	□60

Ⓖ Brake

N	None

Ⓗ Origin sensor (1 pc) *1 *2 *3 *4 *6

N	None
A	Inside motor side
B	Inside motor opposite side
C	Outside motor side
D	Outside motor opposite side

Ⓘ Limit sensor (2 pcs) *1 *2 *3 *4 *6

N	None
A	Inside
B	Outside

Ⓙ Grease nipple *4 *5 *6

N	None (Body mounting direction: Standard)
R	Right
L	Counterclockwise

Ⓚ Positioning pin hole

N	None
P	Yes

Ⓛ Metal stopper specifications (ETS-X)

	Standard
X	Yes

*1: Origin sensor and limit sensor are available as a set. As it is both-or-nothing, select "None" for both.
*2: Origin sensor B and limit sensor A cannot be combined.
*3: For sensor inside mounting, the user cannot adjust the position. (Assembled at shipment) For sensor outside mounting, the user can adjust the position. (Included at shipment)
*4: Contact CKD to use the origin sensor, limit sensor and grease nipple in the same direction.
*5: "Body mounting direction: Standard" here indicates that either top or bottom mounting is possible.
*6: For sensor interior mounting, select "None" for the grease nipple.

Manufacturer	□56	□60
Oriental Motor Co., Ltd.	-	A
MinebeaMitsumi Inc.	B	-
Dyadic Systems Co., Ltd.	C	-

*Refer to page 587 for the motor model No.

Specifications

Applicable motor sizes		□56, □60 stepper motor			
Drive method		Ball screw ø16			
Ball screw accuracy grade		C7			
Stroke length	mm	50 to 1050			
Screw lead	mm	5	10	16	20
Max. load capacity *1	Horizontal kg	50	30	22	18
	Vertical kg	12	8	5	3
Max. speed	mm/s	250	500	800	1000
Rated thrust *1	N	683	341	213	174
Repeatability	mm	±0.01			
Lost motion	mm	0.1 or less			
Drive system weight	kg	0.9			
Other inertia	kg·cm²	0.074			
Coefficient of friction		0.05			
Mechanical efficiency		0.8			
Ball screw length		Stroke + 200			
Dynamic allowable load	N	2651			
Static allowable moment	N·m	MP: 110, MY: 110, MR: 120			
Dynamic allowable moment	N·m	MP: 24.1, MY: 24.1, MR: 24.8			
Operating ambient temperature, humidity		0 to 40°C (no freezing) 35 to 80% RH (no condensation)			
Storage ambient temperature, humidity		-10 to 50°C (no freezing) 35 to 80% RH (no condensation)			
Atmosphere		No corrosive gas, explosive gas, or dust			

*1 The rated thrust and max. load capacity values are the allowable values for the actuator body; the actual thrust and load capacity are limited by the motor used.

Stroke and max. speed

(mm/s)

Stroke length / Screw lead	100 to 750	800	850	900	950	1050
5	250	225	200	175	150	125
10	500	450	400	350	300	250
16	800	720	640	560	480	400
20	1000	900	800	700	600	500

*The max. speed is the speed when the motor mounted by the customer can output a rotation speed of 3000 rpm.

Allowable overhang length

*Refer to page 626 for details.

Moment direction

MP MY MR

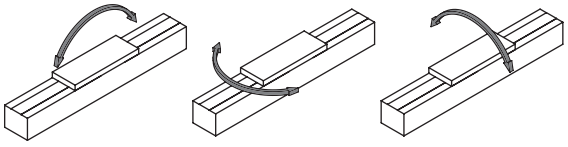

Dimensions Straight motor mounting

● ETS-10-*****-E

· Refer to page 632 for grease nipple dimensions.

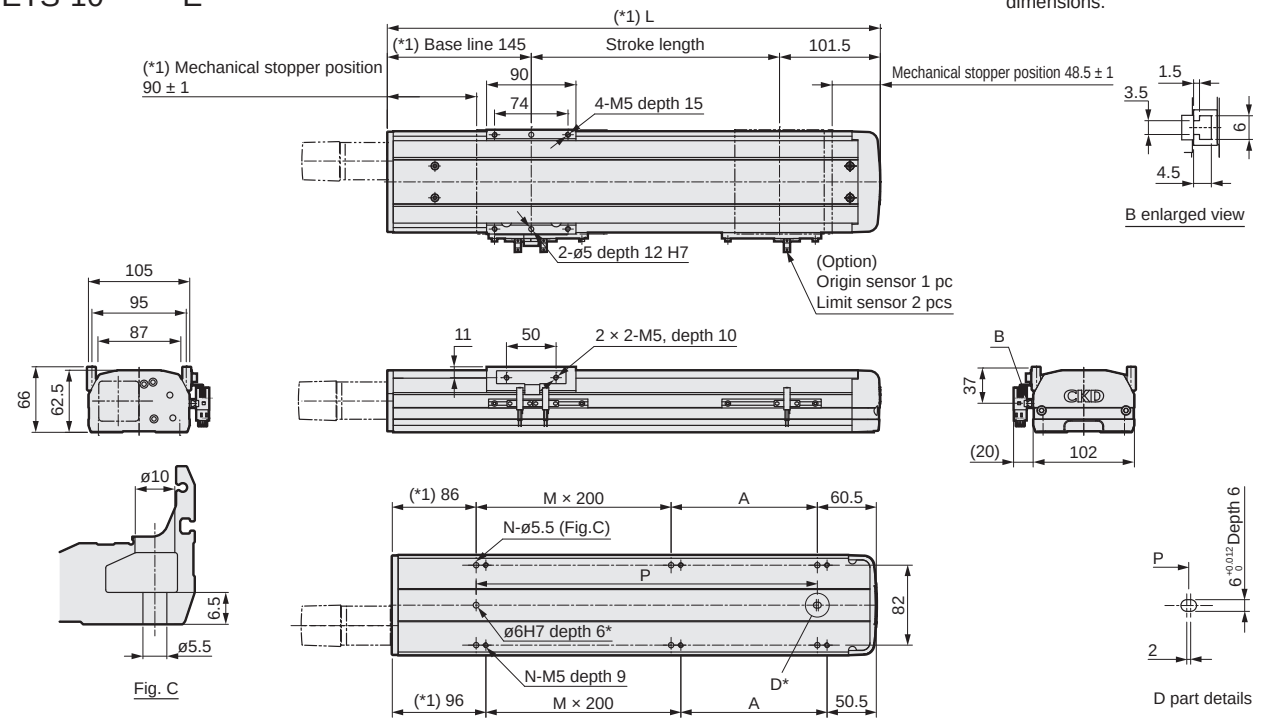

Stroke length (mm)	50	100	150	200	250	300	350	400	450	500	550	600	650	700	750	800	850	900	950	1000	1050
L	296.5	346.5	396.5	446.5	496.5	546.5	596.5	646.5	696.5	746.5	796.5	846.5	896.5	946.5	996.5	1046.5	1096.5	1146.5	1196.5	1246.5	1296.5
A	150	200	50	100	150	200	50	100	150	200	50	100	150	200	50	100	150	200	50	100	150
M	0	0	1	1	1	1	2	2	2	2	3	3	3	3	4	4	4	4	5	5	5
N	4	4	6	6	6	6	8	8	8	8	10	10	10	10	12	12	12	12	14	14	14
P	150	200	250	300	350	400	450	500	550	600	650	700	750	800	850	900	950	1000	1050	1100	1150
Weight (kg)	4.5	4.9	5.2	5.6	6.0	6.4	6.8	7.2	7.6	7.9	8.3	8.7	9.1	9.5	9.9	10.3	10.6	11.0	11.4	11.8	12.2

Motor mounting part

● ETS-10 (□56)

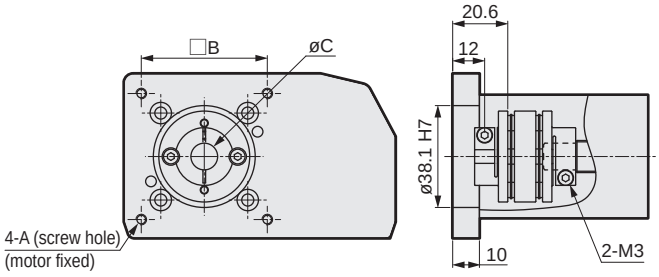

● ETS-10 (□60)

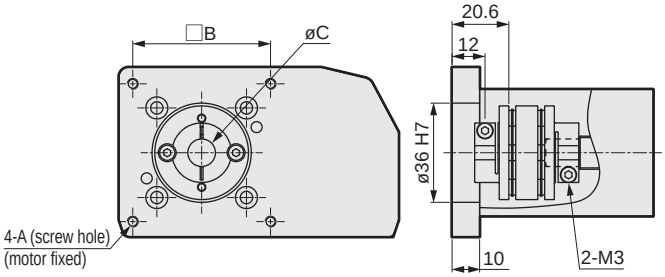

Mounted motor specification		A	B	C	Motor mounting bolt
A	□60	M4 depth 10	50	10	4-M4 × L12
B	□56	M4 depth 10	47.14	6.35	4-M4 × L12
C	□56	M4 depth 10	47.14	8	4-M4 × L12

List of attachments

[Motor mounting parts]

Mounted motor specification	Coupling	Motor size	Motor mounting bolt	
			Size	Quantity
A	Assembled at shipment	□56 □60	M4	4
B			M4	4
C			M4	4

[Origin sensor/Limit sensor]

Manufacturer	Model	Quantity
OMRON Corporation	EE-SX672	3

*Refer to page 630 for sensor specifications.



Electric actuator Ball screw drive Slider

ETS-10 Series

Motor side mounting (left, right, bottom)

● Stepper motor size: □56, □60

How to order

ETS - 10 - 05 005 - R A A N N N L N - X

Ⓐ Body size

10	Body width 102 mm

Ⓑ Screw lead

05	5 mm
10	10 mm
16	16 mm
20	20 mm

Ⓒ Stroke length

005 to 105	50 mm (In 50 mm increments) 1050 mm

Ⓓ Motor mounting direction *6

R	Right mounting
D	Bottom mounting
L	Left mounting

Ⓔ Mounted motor specification

A	Select the mounted motor specification from the table below.
B	
C	

Ⓕ Motor size

B	□56
C	□60

Ⓖ Brake

N	None

Ⓗ Origin sensor (1 pc) *1 *2 *3 *4 *7

N	None
A	Inside motor side
B	Inside motor opposite side
C	Outside motor side
D	Outside motor opposite side

Ⓘ Limit sensor (2 pcs) *1 *2 *3 *4 *7

N	None
A	Inside
B	Outside

Ⓙ Grease nipple *4 *5 *6 *7

N	None (Body mounting direction: Standard)
R	Right
L	Counterclockwise

Ⓚ Positioning pin hole

N	None
P	Yes

Ⓛ Metal stopper specifications (ETS-X)

	Standard
X	Yes

*1: Origin sensor and limit sensor are available as a set. As it is both-or-nothing, select "None" for both.
*2: Origin sensor B and limit sensor A cannot be combined.
*3: For sensor inside mounting, the user cannot adjust the position. (Assembled at shipment)
For sensor outside mounting, the user can adjust the position. (Included at shipment)
*4: Contact CKD to use the origin sensor, limit sensor and grease nipple in the same direction.
*5: "Body mounting direction: Standard" here indicates that either top or bottom mounting is possible.
*6: When selecting motor mounting direction R, grease nipple R cannot be selected. When selecting L, grease nipple L cannot be selected.
*7: For sensor interior mounting, select "None" for the grease nipple.

Manufacturer	□56	□60
Oriental Motor Co., Ltd.	-	A
MinebeaMitsumi Inc.	B	-
Dyadic Systems Co., Ltd.	C	-

*Refer to page 587 for the motor model No.

Specifications

Applicable motor sizes		□56, □60 stepper motor			
Drive method		Ball screw ø16			
Ball screw accuracy grade		C7			
Stroke length	mm	50 to 1050			
Screw lead	mm	5	10	16	20
Max. load capacity *1	Horizontal kg	50	30	22	18
	Vertical kg	12	8	5	3
Max. speed	mm/s	250	500	800	1000
Rated thrust *1	N	683	341	213	174
Repeatability	mm	±0.01			
Lost motion	mm	0.1 or less			
Drive system weight	kg	0.9			
Other inertia	kg·cm²	0.73			
Coefficient of friction		0.05			
Mechanical efficiency		0.8			
Ball screw length		Stroke + 200			
Dynamic allowable load	N	2651			
Static allowable moment	N·m	MP: 110, MY: 110, MR: 120			
Dynamic allowable moment	N·m	MP: 24.1, MY: 24.1, MR: 24.8			
Operating ambient temperature, humidity		0 to 40°C (no freezing) 35 to 80% RH (no condensation)			
Storage ambient temperature, humidity		-10 to 50°C (no freezing) 35 to 80% RH (no condensation)			
Atmosphere		No corrosive gas, explosive gas, or dust			

*1 The rated thrust and max. load capacity values are the allowable values for the actuator body; the actual thrust and load capacity are limited by the motor used.

Stroke and max. speed

(mm/s)

Screw lead \ Stroke length	100 to 750	800	850	900	950	1050
5	250	225	200	175	150	125
10	500	450	400	350	300	250
16	800	720	640	560	480	400
20	1000	900	800	700	600	500

*The max. speed is the speed when the motor mounted by the customer can output a rotation speed of 3000 rpm.

Allowable overhang length

*Refer to page 626 for details.

Moment direction

MP

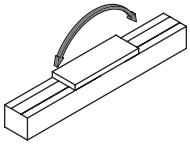

MY

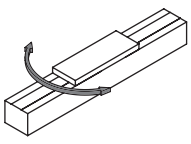

MR

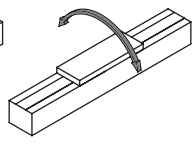

Dimensions Motor right-side mounting

● ETS-10-*****-R

· Refer to page 632 for grease nipple dimensions.

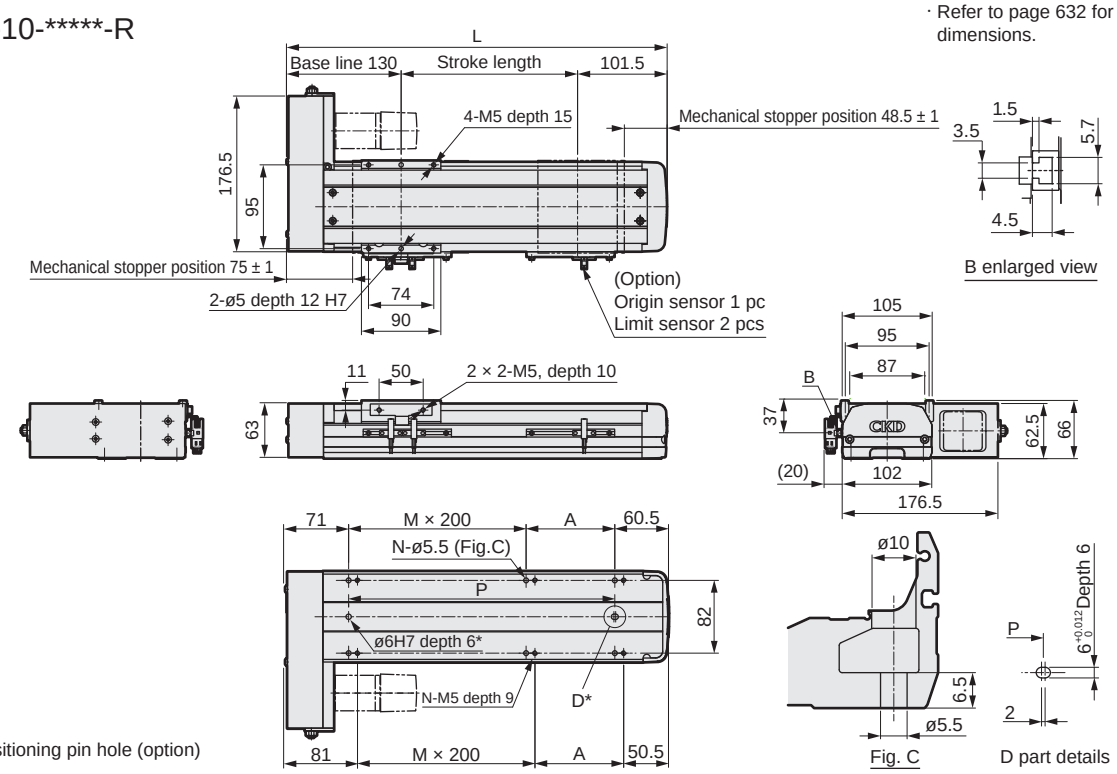

*Positioning pin hole (option)

Stroke length (mm)	50	100	150	200	250	300	350	400	450	500	550	600	650	700	750	800	850	900	950	1000	1050
L	281.5	331.5	381.5	431.5	481.5	531.5	581.5	631.5	681.5	731.5	781.5	831.5	881.5	931.5	981.5	1031.5	1081.5	1131.5	1181.5	1231.5	1281.5
A	150	200	50	100	150	200	50	100	150	200	50	100	150	200	50	100	150	200	50	100	150
M	0	0	1	1	1	1	2	2	2	2	3	3	3	3	4	4	4	4	5	5	5
N	4	4	6	6	6	6	8	8	8	8	10	10	10	10	12	12	12	12	14	14	14
P	150	200	250	300	350	400	450	500	550	600	650	700	750	800	850	900	950	1000	1050	1100	1150
Weight (kg)	5.2	5.5	5.8	6.2	6.6	7.0	7.4	7.8	8.2	8.5	8.9	9.3	9.7	10.1	10.5	10.9	11.2	11.6	12.0	12.4	12.8

Motor mounting part

● ETS-10 (□56)

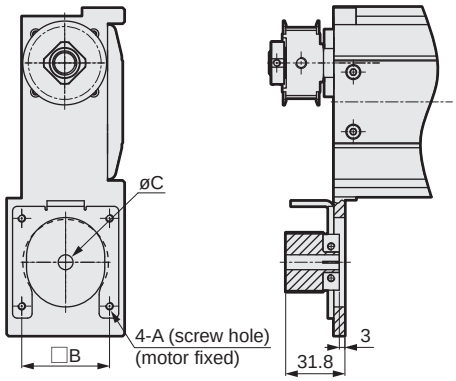

● ETS-10 (□60)

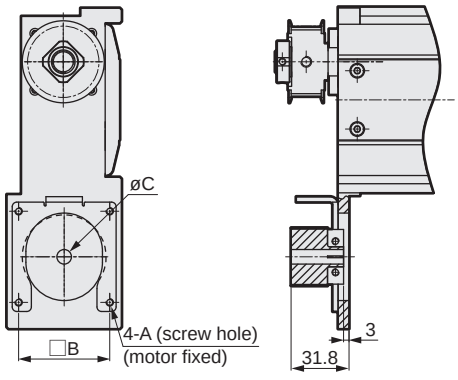

Mounted motor specification		A	B	C	Motor mounting bolt
A	□60	M4	50	10	4-M4 × L12
B	□56	M4	47.14	6.35	4-M4 × L12
C	□56	M4	47.14	8	4-M4 × L12

List of attachments

[Motor mounting parts]

Mounted motor specification	Timing belt, pulley	Motor size	Motor mounting bolt	
			Size	Quantity
A	Included at shipment	□56 □60	M4	4
B			M4	4
C			M4	4

[Origin sensor/Limit sensor]

Manufacturer	Model	Quantity
OMRON Corporation	EE-SX672	3

*Refer to page 630 for sensor specifications.

Dimensions Motor bottom mounting

● ETS-10-*****-D

· Refer to page 632 for grease nipple dimensions.

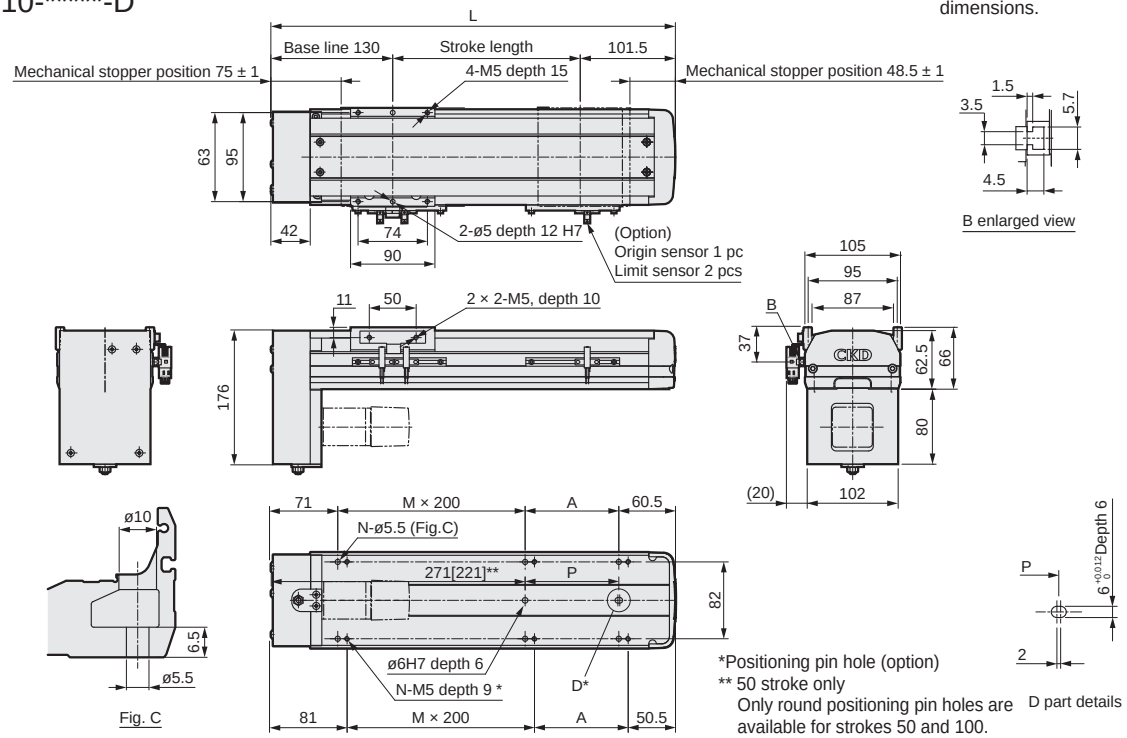

*Positioning pin hole (option)
** 50 stroke only
Only round positioning pin holes are available for strokes 50 and 100.

Stroke length (mm)	50	100	150	200	250	300	350	400	450	500	550	600	650	700	750	800	850	900	950	1000	1050
L	281.5	331.5	381.5	431.5	481.5	531.5	581.5	631.5	681.5	731.5	781.5	831.5	881.5	931.5	981.5	1031.5	1081.5	1131.5	1181.5	1231.5	1281.5
A	150	200	50	100	150	200	50	100	150	200	50	100	150	200	50	100	150	200	50	100	150
M	0	0	1	1	1	1	2	2	2	2	3	3	3	3	4	4	4	4	5	5	5
N	4	4	6	6	6	6	8	8	8	8	10	10	10	10	12	12	12	12	14	14	14
P	0	0	50	100	150	200	250	300	350	400	450	500	550	600	650	700	750	800	850	900	950
Weight (kg)	5.2	5.7	6.0	6.4	6.6	7.0	7.6	8.0	8.4	8.7	9.1	9.5	9.9	10.3	10.7	11.1	11.4	11.8	12.2	12.6	13.0

Motor mounting part

● ETS-10 (□ 56)

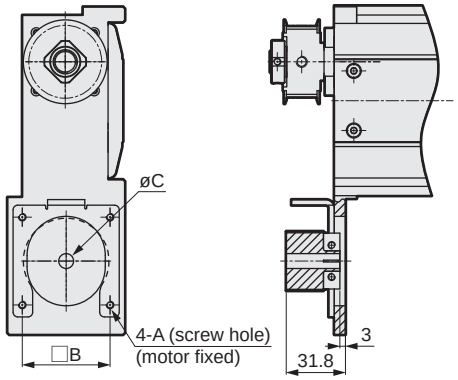

● ETS-10 (□ 60)

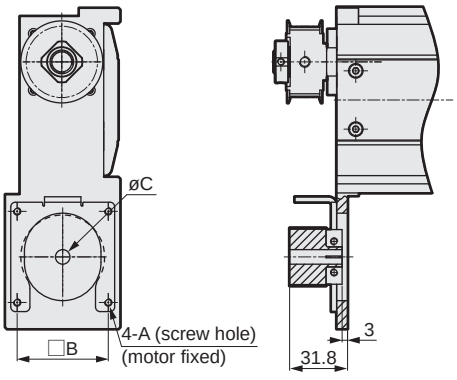

Mounted motor specification		A	B	C	Motor mounting bolt
A	□ 60	M4	50	10	4-M4 × L12
B	□ 56	M4	47.14	6.35	4-M4 × L12
C	□ 56	M4	47.14	8	4-M4 × L12

List of attachments

[Motor mounting parts]

Mounted motor specification	Timing belt, pulley	Motor size	Motor mounting bolt	
			Size	Quantity
A	Included at shipment	□ 56 □ 60	M4	4
B			M4	4
C			M4	4

[Origin sensor/Limit sensor]

Manufacturer	Model	Quantity
OMRON Corporation	EE-SX672	3

*Refer to page 630 for sensor specifications.

Dimensions Motor left-side mounting

● ETS-10-*****-L

· Refer to page 632 for grease nipple dimensions.

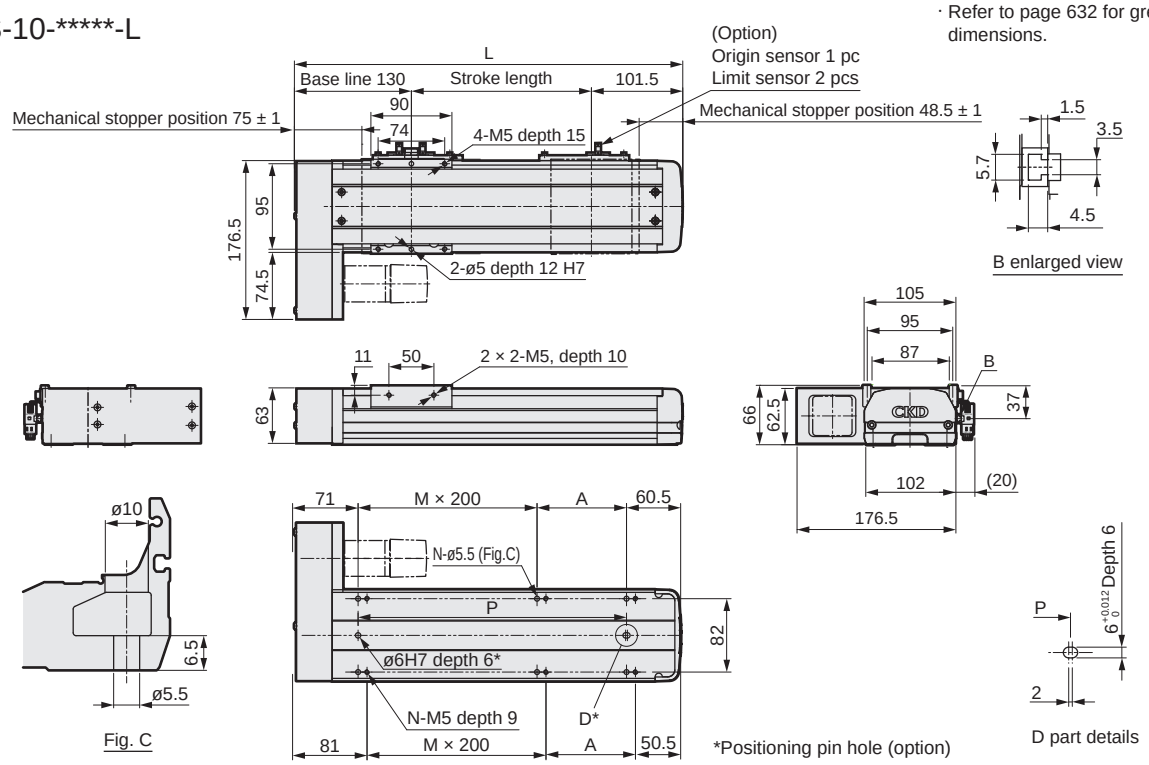

Stroke length (mm)	50	100	150	200	250	300	350	400	450	500	550	600	650	700	750	800	850	900	950	1000	1050
L	281.5	331.5	381.5	431.5	481.5	531.5	581.5	631.5	681.5	731.5	781.5	831.5	881.5	931.5	981.5	1031.5	1081.5	1131.5	1181.5	1231.5	1281.5
A	150	200	50	100	150	200	50	100	150	200	50	100	150	200	50	100	150	200	50	100	150
M	0	0	1	1	1	1	2	2	2	2	3	3	3	3	4	4	4	4	5	5	5
N	4	4	6	6	6	6	8	8	8	8	10	10	10	10	12	12	12	12	14	14	14
P	150	200	250	300	350	400	450	500	550	600	650	700	750	800	850	900	950	1000	1050	1100	1150
Weight (kg)	5.2	5.5	5.8	6.2	6.6	7.0	7.4	7.8	8.2	8.5	8.9	9.3	9.7	10.1	10.5	10.9	11.2	11.6	12.0	12.4	12.8

Motor mounting part

● ETS-10 (□56)

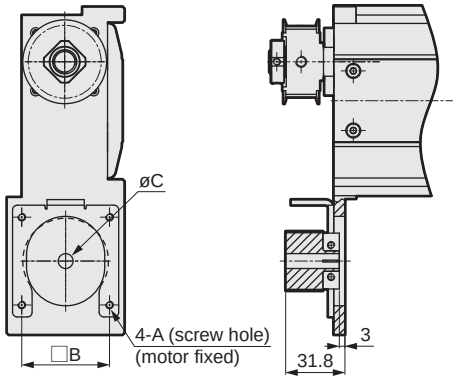

● ETS-10 (□60)

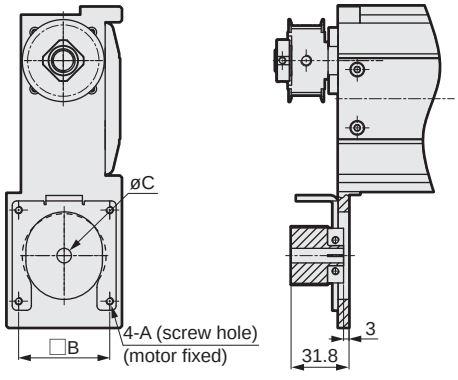

Mounted motor specification		A	B	C	Motor mounting bolt
A	□60	M4	50	10	4-M4 × L12
B	□56	M4	47.14	6.35	4-M4 × L12
C	□56	M4	47.14	8	4-M4 × L12

List of attachments

[Motor mounting parts]

Mounted motor specification	Timing belt, pulley	Motor size	Motor mounting bolt	
			Size	Quantity
A	Included at shipment	□56 □60	M4	4
B			M4	4
C			M4	4

[Origin sensor/Limit sensor]

Manufacturer	Model	Quantity
OMRON Corporation	EE-SX672	3

*Refer to page 630 for sensor specifications.



Electric actuator Ball screw drive Slider

ETS-12 Series

Straight motor mounting

● Stepper motor size: □56, □60

How to order

ETS - 12 - 05 - 005 - E A B N N N N N - X

(A) Body size

12	Body width 102 mm

(B) Screw lead

05	5 mm
10	10 mm
16	16 mm
20	20 mm

(C) Stroke length

005 to 105	50 mm (In 50 mm increments) 1050 mm

(D) Motor mounting direction

E	Straight mounting

(E) Mounted motor specification

A	Select the mounted motor specification from the table below.
B	
C	

(F) Motor size

B	□56
C	□60

(G) Brake

N	None

(H) Origin sensor (1 pc) *1 *2 *3

N	None
A	Inside motor side
B	Inside motor opposite side
C	Outside motor side
D	Outside motor opposite side

(I) Limit sensor (2 pcs) *1 *2 *3

N	None
A	Inside
B	Outside

(J) Grease nipple *3 *4

N	None (Body mounting direction: Standard)
R	Right
L	Counterclockwise

(K) Positioning pin hole

N	None
P	Yes

(L) Metal stopper specifications (ETS-X)

	Standard
X	Yes

*1: Origin sensor and limit sensor are available as a set. As it is both-or-nothing, select "None" for both.
*2: For sensor inside mounting, the user cannot adjust the position. (Assembled at shipment)
For sensor outside mounting, the user can adjust the position. (Included at shipment)
*3: Contact CKD to use the origin sensor, limit sensor and grease nipple in the same direction.
*4: "Body mounting direction: Standard" here indicates that either top or bottom mounting is possible.

Manufacturer	□56	□60
Oriental Motor Co., Ltd.	-	A
MinebeaMitsumi Inc.	B	-
Dyadic Systems Co., Ltd.	C	-

*Refer to page 587 for the motor model No.

Specifications

Applicable motor sizes		□56, □60 stepper motor			
Drive method		Ball screw ø16			
Ball screw accuracy grade		C7			
Stroke length	mm	50 to 1050			
Screw lead	mm	5	10	16	20
Max. load capacity *1	Horizontal kg	50	30	22	18
	Vertical kg	12	8	5	3
Max. speed	mm/s	250	500	800	1000
Rated thrust *1	N	683	341	213	174
Repeatability	mm	±0.01			
Lost motion	mm	0.1 or less			
Drive system weight	kg	0.8			
Other inertia	kg·cm²	0.040			
Coefficient of friction		0.05			
Mechanical efficiency		0.8			
Ball screw length		Stroke + 200			
Dynamic allowable load	N	1660			
Static allowable moment	N·m	MP: 150, MY: 150, MR: 130			
Dynamic allowable moment	N·m	MP: 42.3, MY: 42.3, MR: 53.1			
Operating ambient temperature, humidity		0 to 40°C (no freezing) 35 to 80% RH (no condensation)			
Storage ambient temperature, humidity		-10 to 50°C (no freezing) 35 to 80% RH (no condensation)			
Atmosphere		No corrosive gas, explosive gas, or dust			

*1 The rated thrust and max. load capacity values are the allowable values for the actuator body; the actual thrust and load capacity are limited by the motor used.

Stroke and max. speed

(mm/s)

Screw lead \ Stroke length	100 to 750	800	850	900	950	1050
5	250	225	200	175	150	125
10	500	450	400	350	300	250
16	800	720	640	560	480	400
20	1000	900	800	700	600	500

*The max. speed is the speed when the motor mounted by the customer can output a rotation speed of 3000 rpm.

Allowable overhang length

*Refer to page 626 for details.

Moment direction

MP

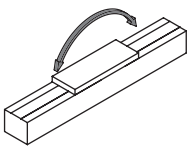

MY

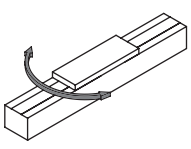

MR

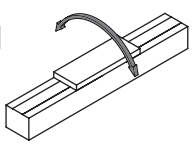

Dimensions Straight motor mounting

● ETS-12-*****-E

· Refer to page 632 for grease nipple dimensions.

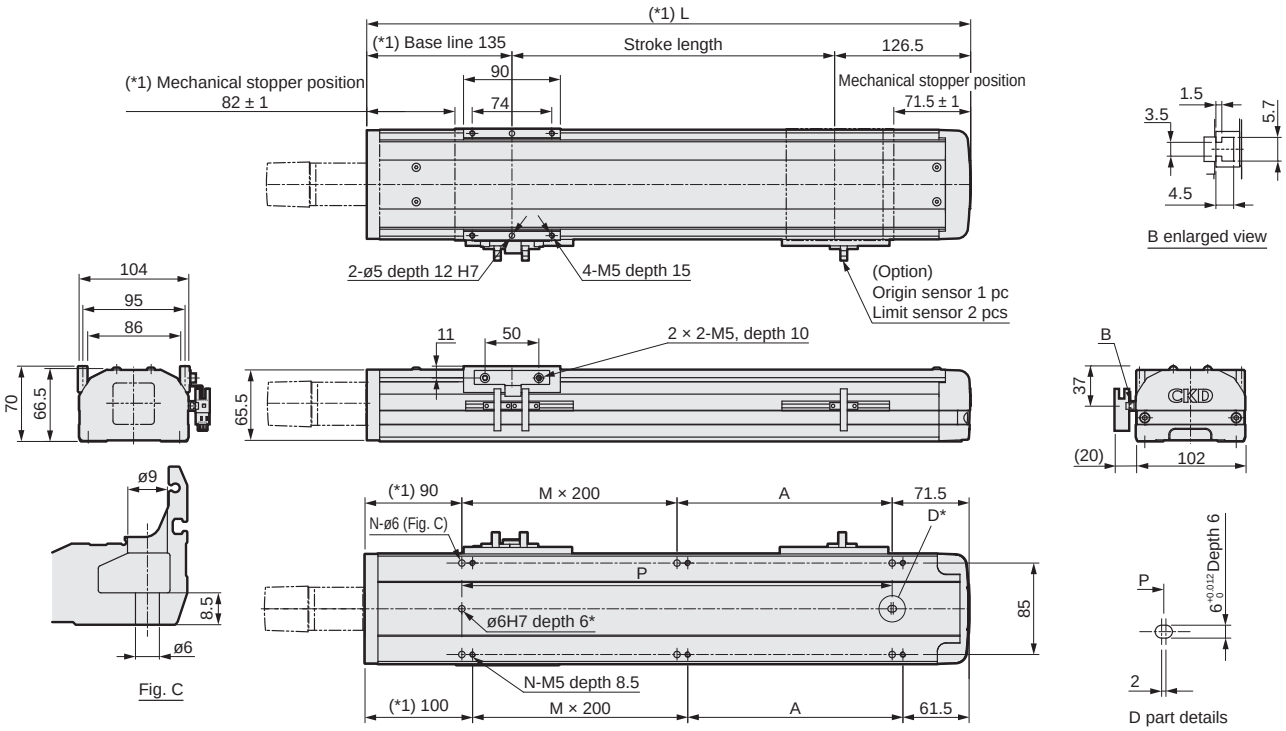

*Positioning pin hole (option)

Stroke length (mm)	50	100	150	200	250	300	350	400	450	500	550	600	650	700	750	800	850	900	950	1000	1050
L	311.5	361.5	411.5	461.5	511.5	561.5	611.5	661.5	711.5	761.5	811.5	861.5	911.5	961.5	1011.5	1061.5	1111.5	1161.5	1211.5	1261.5	1311.5
A	150	200	50	100	150	200	50	100	150	200	50	100	150	200	50	100	150	200	50	100	150
M	0	0	1	1	1	1	2	2	2	2	3	3	3	3	4	4	4	4	5	5	5
N	4	4	6	6	6	6	8	8	8	8	10	10	10	10	12	12	12	12	14	14	14
P	150	200	250	300	350	400	450	500	550	600	650	700	750	800	850	900	950	1000	1050	1100	1150
Weight (kg)	5.6	6.0	6.4	6.8	7.2	7.6	8.0	8.4	8.8	9.1	9.5	9.9	10.3	10.7	11.1	11.5	11.8	12.2	12.6	13.0	13.4

Motor mounting part

● ETS-12 (□56)

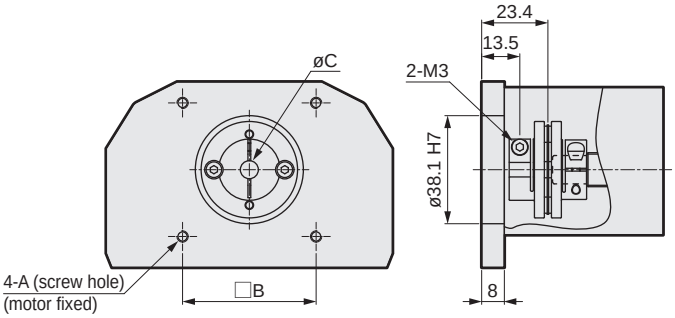

● ETS-12 (□60)

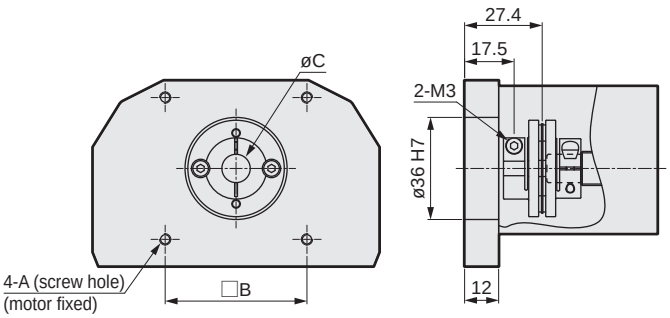

Mounted motor specification		A	B	C	Motor mounting bolt
A	□60	M4 depth 8	50	10	4-M4 × L16
B	□56	M4 depth 8	47.14	6.35	4-M4 × L16
C	□56	M4 depth 8	47.14	8	4-M4 × L16

List of attachments

[Motor mounting parts]

Mounted motor specification	Coupling	Motor size	Motor mounting bolt	
			Size	Quantity
A	Assembled at shipment	□56 □60	M4	4
B			M4	4
C			M4	4

[Origin sensor/Limit sensor]

Manufacturer	Model	Quantity
OMRON Corporation	EE-SX672	3

*Refer to page 630 for sensor specifications.



Electric actuator Ball screw drive Slider

ETS-12 Series

Motor side mounting (left, right, bottom)

● Stepper motor size: □56, □60

How to order

ETS - 12 - 05 - 005 - R A B N N N L N - X

(A) (B) (C) (D) (E) (F) (G) (H) (I) (J) (K) (L)

(A) Body size

12	Body width 102 mm

(B) Screw lead

05	5 mm
10	10 mm
16	16 mm
20	20 mm

(C) Stroke length

005 to 105	50 mm (In 50 mm increments) 1050 mm

(D) Motor mounting direction *3*6

R	Right mounting
D	Bottom mounting
L	Left mounting

(E) Mounted motor specification

A	Select the mounted motor specification from the table below.
B	
C	

(F) Motor size

B	□56
C	□60

(G) Brake

N	None

(H) Origin sensor (1 pc) *1 *2 *3 *4

N	None
A	Inside motor side
B	Inside motor opposite side
C	Outside motor side
D	Outside motor opposite side

(I) Limit sensor (2 pcs) *1 *2 *3 *4

N	None
A	Inside
B	Outside

(J) Grease nipple *4 *5 *6

N	None (Body mounting direction: Standard)
R	Right
L	Counterclockwise

(K) Positioning pin hole

N	None
P	Yes

(L) Metal stopper specifications (ETS-X)

	Standard
X	Yes

*1: Origin sensor and limit sensor are available as a set. As it is both-or-nothing, select "None" for both.
*2: For sensor inside mounting, the user cannot adjust the position. (Assembled at shipment)
For sensor outside mounting, the user can adjust the position. (Included at shipment)
*3: When the motor mounting direction is R or L, origin sensor A and limit sensor A cannot be combined.
*4: Contact CKD to use the origin sensor, limit sensor and grease nipple in the same direction.
*5: "Body mounting direction: Standard" here indicates that either top or bottom mounting is possible.
*6: When selecting motor mounting direction R, grease nipple R cannot be selected. When selecting L, grease nipple L cannot be selected.

Manufacturer	□56	□60
Oriental Motor Co., Ltd.	-	A
MinebeaMitsumi Inc.	B	-
Dyadic Systems Co., Ltd.	C	-

*Refer to page 587 for the motor model No.

Specifications

Applicable motor sizes		□56, □60 stepper motor			
Drive method		Ball screw ø16			
Ball screw accuracy grade		C7			
Stroke length	mm	50 to 1050			
Screw lead	mm	5	10	16	20
Max. load capacity *1	Horizontal kg	50	30	22	18
	Vertical kg	12	8	5	3
Max. speed *2	mm/s	250	500	800	1000
Rated thrust *1	N	683	341	213	174
Repeatability	mm	±0.01			
Lost motion	mm	0.1 or less			
Drive system weight	kg	0.8			
Other inertia	kg·cm²	0.730			
Coefficient of friction		0.05			
Mechanical efficiency		0.8			
Ball screw length		Stroke + 200			
Dynamic allowable load	N	1660			
Static allowable moment	N·m	MP: 150, MY: 150, MR: 130			
Dynamic allowable moment	N·m	MP: 42.3, MY: 42.3, MR: 53.1			
Operating ambient temperature, humidity		0 to 40°C (no freezing) 35 to 80% RH (no condensation)			
Storage ambient temperature, humidity		-10 to 50°C (no freezing) 35 to 80% RH (no condensation)			
Atmosphere		No corrosive gas, explosive gas, or dust			

*1 The rated thrust and max. load capacity values are the allowable values for the actuator body; the actual thrust and load capacity are limited by the motor used.

Stroke and max. speed

(mm/s)

Screw lead \ Stroke length	100 to 750	800	850	900	950	1050
5	250	225	200	175	150	125
10	500	450	400	350	300	250
16	800	720	640	560	480	400
20	1000	900	800	700	600	500

*The max. speed is the speed when the motor mounted by the customer can output a rotation speed of 3000 rpm.

Allowable overhang length

*Refer to page 626 for details.

Moment direction

MP MY MR

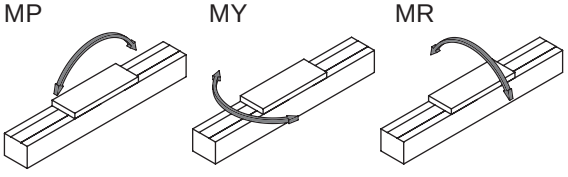

Dimensions Motor right-side mounting

● ETS-12-*****-R

· Refer to page 632 for grease nipple dimensions.

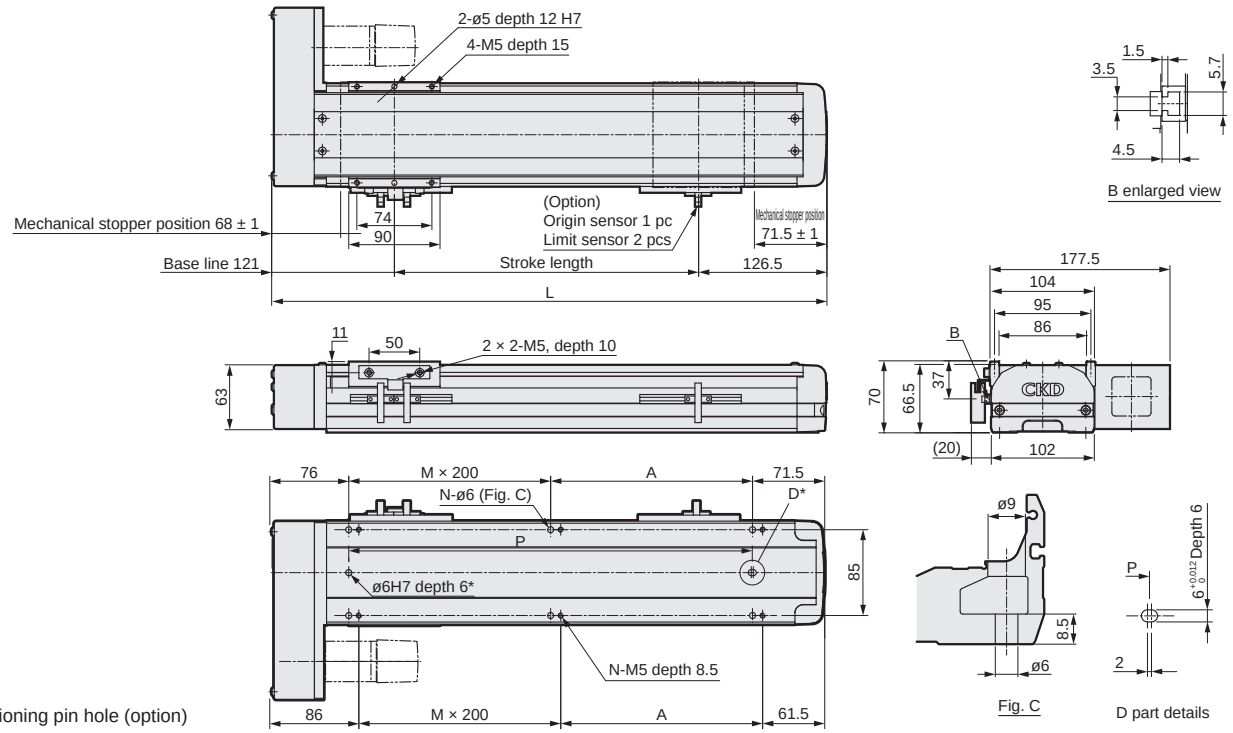

*Positioning pin hole (option)

Stroke length (mm)	50	100	150	200	250	300	350	400	450	500	550	600	650	700	750	800	850	900	950	1000	1050
L	297.5	347.5	397.5	447.5	497.5	547.5	597.5	647.5	697.5	747.5	797.5	847.5	897.5	947.5	997.5	1047.5	1097.5	1147.5	1197.5	1247.5	1297.5
A	150	200	50	100	150	200	50	100	150	200	50	100	150	200	50	100	150	200	50	100	150
M	0	0	1	1	1	1	2	2	2	2	3	3	3	3	4	4	4	4	5	5	5
N	4	4	6	6	6	6	8	8	8	8	10	10	10	10	12	12	12	12	14	14	14
P	150	200	250	300	350	400	450	500	550	600	650	700	750	800	850	900	950	1000	1050	1100	1150
Weight (kg)	6.2	6.6	7.0	7.4	7.8	8.2	8.6	9.0	9.4	9.7	10.1	10.5	10.9	11.3	11.7	12.1	12.4	12.8	13.2	13.6	14.0

Motor mounting part

● ETS-12 (□56)

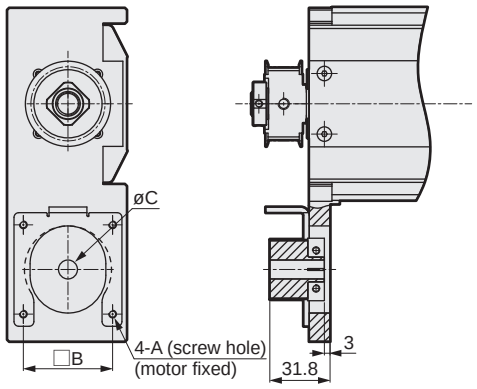

● ETS-12 (□60)

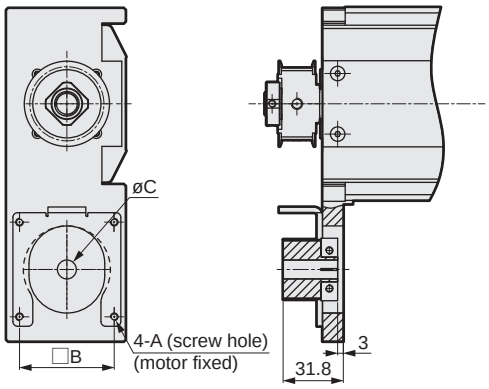

Mounted motor specification		A	B	C	Motor mounting bolt
A	□60	M4	50	10	4-M4 × L20
B	□56	M4	47.14	6.35	4-M4 × L20
C	□56	M4	47.14	8	4-M4 × L20

List of attachments

[Motor mounting parts]

Mounted motor specification	Timing belt, pulley	Motor size	Motor mounting bolt	
			Size	Quantity
A	Included at shipment	□56 □60	M4	4
B			M4	4
C			M4	4

[Origin sensor/Limit sensor]

Manufacturer	Model	Quantity
OMRON Corporation	EE-SX672	3

*Refer to page 630 for sensor specifications.

Dimensions Motor bottom mounting

● ETS-12-*****-D

· Refer to page 632 for grease nipple dimensions.

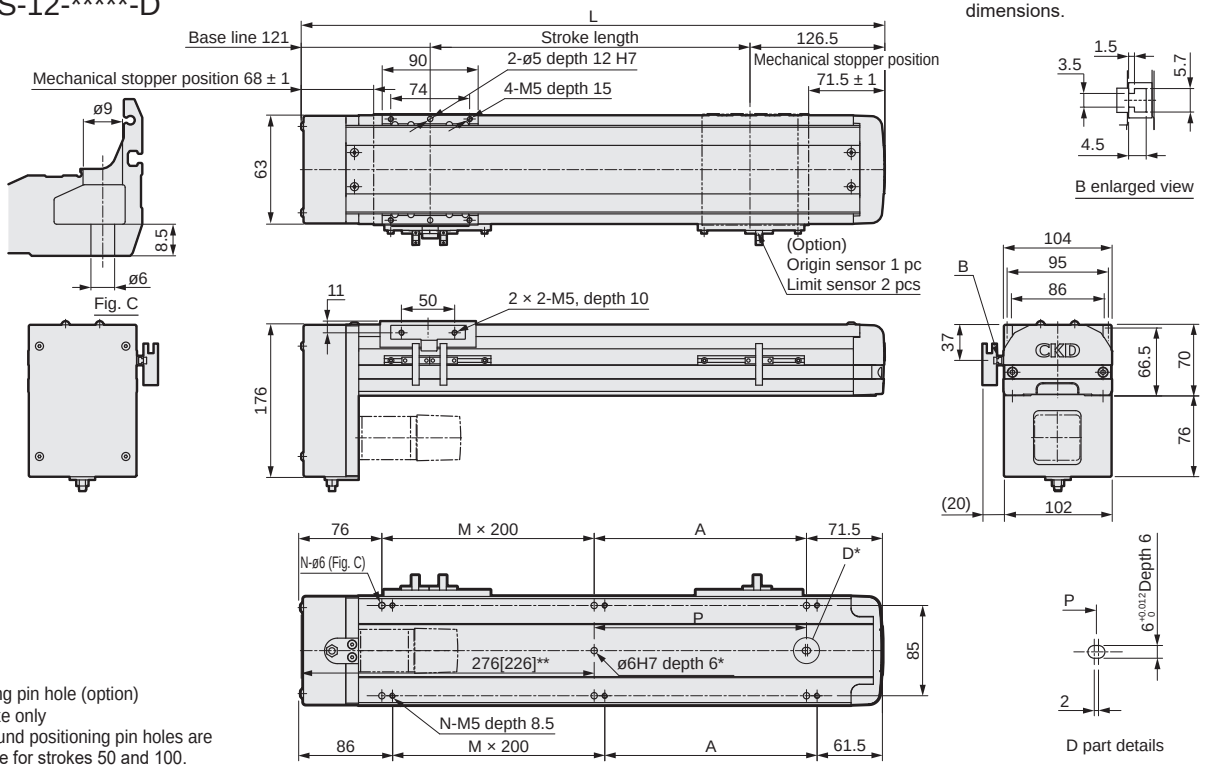

*Positioning pin hole (option)
** 50 stroke only
Only round positioning pin holes are available for strokes 50 and 100.

Stroke length (mm)	50	100	150	200	250	300	350	400	450	500	550	600	650	700	750	800	850	900	950	1000	1050
L	297.5	347.5	397.5	447.5	497.5	547.5	597.5	647.5	697.5	747.5	797.5	847.5	897.5	947.5	997.5	1047.5	1097.5	1147.5	1197.5	1247.5	1297.5
A	150	200	50	100	150	200	50	100	150	200	50	100	150	200	50	100	150	200	50	100	150
M	0	0	1	1	1	1	2	2	2	2	3	3	3	3	4	4	4	4	5	5	5
N	4	4	6	6	6	6	8	8	8	8	10	10	10	10	12	12	12	12	14	14	14
P	0	0	50	100	150	200	250	300	350	400	450	500	550	600	650	700	750	800	850	900	950
Weight (kg)	6.4	6.8	7.2	7.6	7.8	8.2	8.8	9.2	9.6	9.9	10.3	10.7	11.1	11.5	11.9	12.3	12.6	13.0	13.4	13.8	14.2

Motor mounting part

● ETS-12 (□ 56)

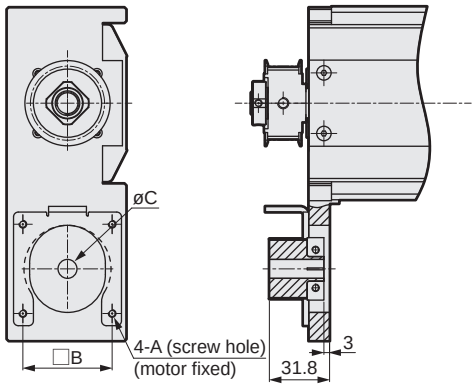

● ETS-12 (□ 60)

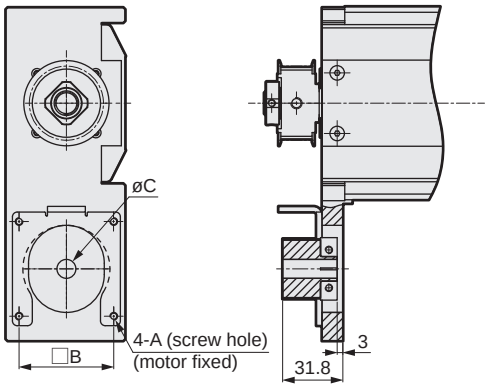

Mounted motor specification		A	B	C	Motor mounting bolt
A	□ 60	M4	50	10	4-M4 × L20
B	□ 56	M4	47.14	6.35	4-M4 × L20
C	□ 56	M4	47.14	8	4-M4 × L20

List of attachments

[Motor mounting parts]

Mounted motor specification	Timing belt, pulley	Motor size	Motor mounting bolt	
			Size	Quantity
A	Included at shipment	□ 56 □ 60	M4	4
B			M4	4
C			M4	4

[Origin sensor/Limit sensor]

Manufacturer	Model	Quantity
OMRON Corporation	EE-SX672	3

*Refer to page 630 for sensor specifications.

Dimensions Motor left-side mounting

● ETS-12-*****-L

· Refer to page 632 for grease nipple dimensions.

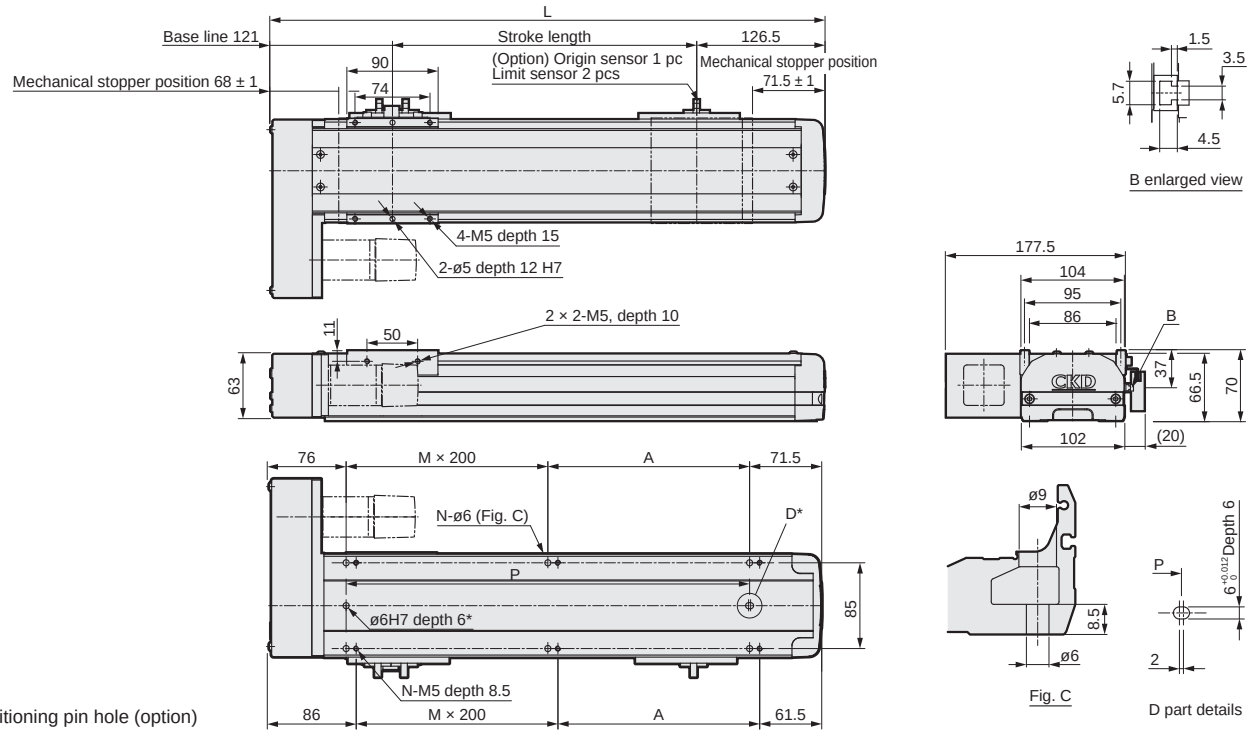

*Positioning pin hole (option)

Stroke length (mm)	50	100	150	200	250	300	350	400	450	500	550	600	650	700	750	800	850	900	950	1000	1050
L	297.5	347.5	397.5	447.5	497.5	547.5	597.5	647.5	697.5	747.5	797.5	847.5	897.5	947.5	997.5	1047.5	1097.5	1147.5	1197.5	1247.5	1297.5
A	150	200	50	100	150	200	50	100	150	200	50	100	150	200	50	100	150	200	50	100	150
M	0	0	1	1	1	1	2	2	2	2	3	3	3	3	4	4	4	4	5	5	5
N	4	4	6	6	6	6	8	8	8	8	10	10	10	10	12	12	12	12	14	14	14
P	150	200	250	300	350	400	450	500	550	600	650	700	750	800	850	900	950	1000	1050	1100	1150
Weight (kg)	6.2	6.6	7.0	7.4	7.8	8.2	8.6	9.0	9.4	9.7	10.1	10.5	10.9	11.3	11.7	12.1	12.4	12.8	13.2	13.6	14.0

Motor mounting part

● ETS-12 (□56)

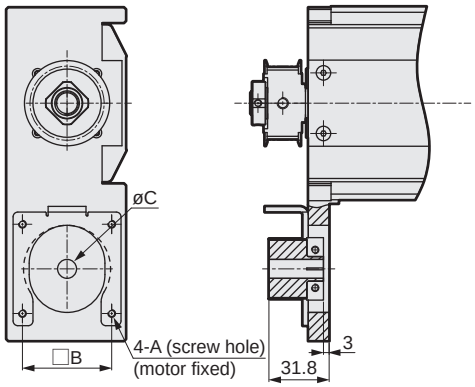

● ETS-12 (□60)

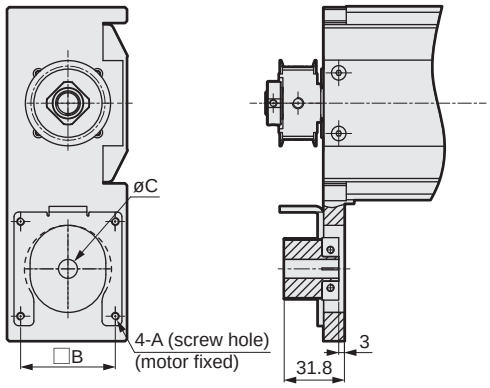

Mounted motor specification		A	B	C	Motor mounting bolt
A	□60	M4	50	10	4-M4 × L20
B	□56	M4	47.14	6.35	4-M4 × L20
C	□56	M4	47.14	8	4-M4 × L20

List of attachments

[Motor mounting parts]

Mounted motor specification	Timing belt, pulley	Motor size	Motor mounting bolt	
			Size	Quantity
A	Included at shipment	□56 □60	M4	4
B			M4	4
C			M4	4

[Origin sensor/Limit sensor]

Manufacturer	Model	Quantity
OMRON Corporation	EE-SX672	3

*Refer to page 630 for sensor specifications.



Electric actuator Ball screw drive Slider

ETS-13 Series

Straight motor mounting

● Stepper motor size: □56, □60

How to order

ETS - 13 - 05 005 - E A B N N N N N X

(A) (B) (C) (D) (E) (F) (G) (H) (I) (J) (K) (L)

(A) Body size

13	Body width 135 mm

(B) Screw lead

05	5 mm
10	10 mm
16	16 mm
20	20 mm

(C) Stroke length

005 to 105	50 mm (In 50 mm increments) 1050 mm

(D) Motor mounting direction

E	Straight mounting

(E) Mounted motor specification

A	Select the mounted motor specification from the table below.
B	
C	

(F) Motor size

B	□56
C	□60

(G) Brake

N	None

(H) Origin sensor (1 pc) *1 *2 *3

N	None
A	Inside motor side
B	Inside motor opposite side
C	Outside motor side
D	Outside motor opposite side

(I) Limit sensor (2 pcs) *1 *2 *3

N	None
A	Inside
B	Outside

(J) Grease nipple *3 *4

N	None (Body mounting direction: Standard)
R	Right
L	Counterclockwise

(K) Positioning pin hole

N	None
P	Yes

(L) Metal stopper specifications (ETS-X)

	Standard
X	Yes

Manufacturer	□56	□60
Oriental Motor Co., Ltd.	-	A
MinebeaMitsumi Inc.	B	-
Dyadic Systems Co., Ltd.	C	-

*Refer to page 587 for the motor model No.

*1: Origin sensor and limit sensor are available as a set. As it is both-or-nothing, select "None" for both.
*2: For sensor inside mounting, the user cannot adjust the position. (Assembled at shipment)
For sensor outside mounting, the user can adjust the position. (Included at shipment)
*3: Contact CKD to use the origin sensor, limit sensor and grease nipple in the same direction.
*4: "Body mounting direction: Standard" here indicates that either top or bottom mounting is possible.

Specifications

Applicable motor size *1		□56, □60 stepper motor			
Drive method		Ball screw ø16			
Ball screw accuracy grade		C7			
Stroke length	mm	50 to 1050			
Screw lead	mm	5	10	16	20
Max. load capacity *1	Horizontal kg	70	47	30	24
	Vertical kg	17	12	6	4
Max. speed	mm/s	250	500	800	1000
Rated thrust *1	N	1388	694	433	347
Repeatability	mm	±0.01			
Lost motion	mm	0.1 or less			
Drive system weight	kg	1.0			
Other inertia	kg·cm²	0.074			
Coefficient of friction		0.03			
Mechanical efficiency		0.8			
Ball screw length		Stroke + 200			
Dynamic allowable load	N	4822			
Static allowable moment	N·m	MP: 175, MY: 174, MR: 153			
Dynamic allowable moment	N·m	MP: 45.1, MY: 45.1, MR: 191.7			
Operating ambient temperature, humidity		0 to 40°C (no freezing) 35 to 80% RH (no condensation)			
Storage ambient temperature, humidity		-10 to 50°C (no freezing) 35 to 80% RH (no condensation)			
Atmosphere		No corrosive gas, explosive gas, or dust			

*1 The rated thrust and max. load capacity values are the allowable values for the actuator body; the actual thrust and load capacity are limited by the motor used.

Stroke and max. speed

(mm/s)

Stroke length / Screw lead	100 to 750	800	850	900	950	1050
5	250	225	200	175	150	125
10	500	450	400	350	300	250
16	800	720	640	560	480	400
20	1000	900	800	700	600	500

*The max. speed is the speed when the motor mounted by the customer can output a rotation speed of 3000 rpm.

Allowable overhang length

*Refer to page 626 for details.

Moment direction

MP MY MR

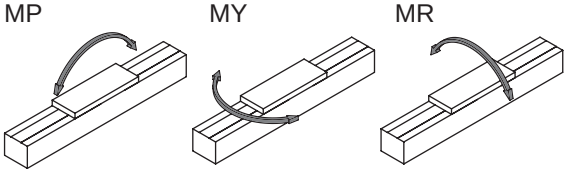

Dimensions Straight motor mounting

● ETS-13-*****-E

· Refer to page 632 for grease nipple dimensions.

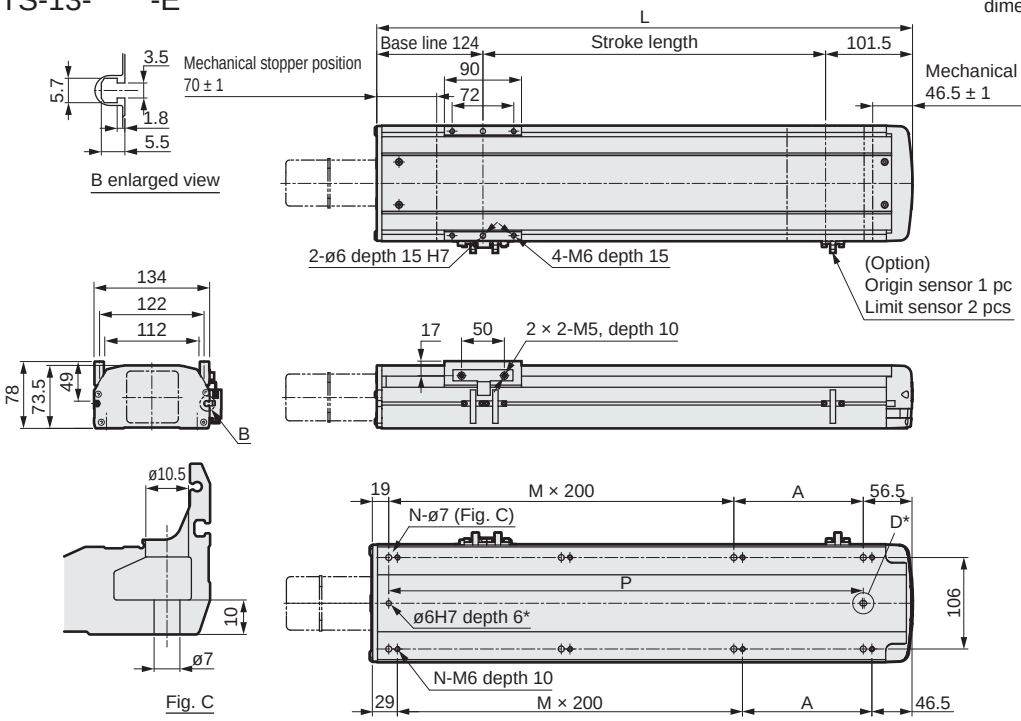

*Positioning pin hole (option)

Stroke length (mm)	50	100	150	200	250	300	350	400	450	500	550	600	650	700	750	800	850	900	950	1000	1050
L	275.5	325.5	375.5	425.5	475.5	525.5	575.5	625.5	675.5	725.5	775.5	825.5	875.5	925.5	975.5	1025.5	1075.5	1125.5	1175.5	1225.5	1275.5
A	200	50	100	150	200	50	100	150	200	50	100	150	200	50	100	150	200	50	100	150	200
M	0	1	1	1	1	2	2	2	2	3	3	3	3	4	4	4	4	5	5	5	5
N	4	6	6	6	6	8	8	8	8	10	10	10	10	12	12	12	12	14	14	14	14
P	200	250	300	350	400	450	500	550	600	650	700	750	800	850	900	950	1000	1050	1100	1150	1200
Weight (kg)	5.9	6.5	6.9	7.4	7.9	8.4	8.9	9.3	9.9	10.3	10.9	11.3	11.8	12.3	12.8	13.3	13.8	14.3	14.8	15.2	15.8

Motor mounting part

● ETS-13 (□56)

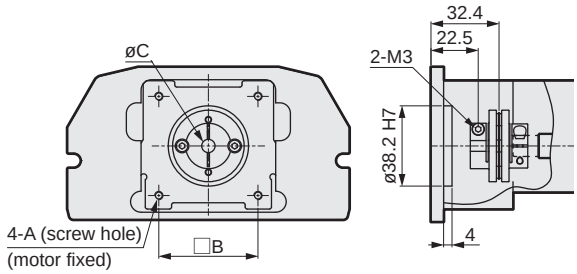

● ETS-13 (□60)

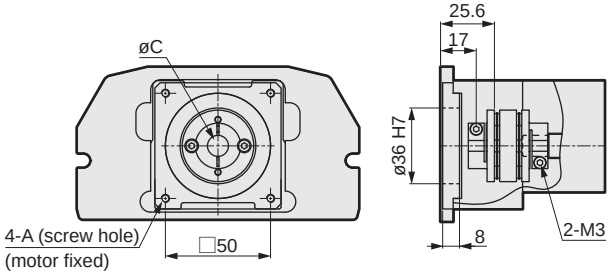

Mounted motor specification		A	B	C	Motor mounting bolt
A	□60	M4	50	10	4-M4 × L20
B	□56	M4	47.14	6.35	4-M4 × L20
C	□56	M4	47.14	8	4-M4 × L20

List of attachments

[Motor mounting parts]

Mounted motor specification	Coupling	Motor size	Motor mounting bolt	
			Size	Quantity
A	Assembled at shipment	□56 □60	M4	4
B			M4	4
C			M4	4

[Origin sensor/Limit sensor]

Manufacturer	Model	Quantity
OMRON Corporation	EE-SX672	3

*Refer to page 630 for sensor specifications.



Electric actuator Ball screw drive Slider

ETS-13 Series

Motor side mounting (left, right, bottom)

● Stepper motor size: □56, □60

How to order

ETS - 13 - 05 005 - R A B N N N N N X

(A) (B) (C) (D) (E) (F) (G) (H) (I) (J) (K) (L)

(A) Body size

13	Body width 135 mm

(B) Screw lead

05	5 mm
10	10 mm
16	16 mm
20	20 mm

(C) Stroke length

005 to 105	50 mm (In 50 mm increments) 1050 mm

(D) Motor mounting direction *5

R	Right mounting
D	Bottom mounting
L	Left mounting

(E) Mounted motor specification

A	Select the mounted motor specification from the table below.
B	
C	

(F) Motor size

B	□56
C	□60

(G) Brake

N	None

(H) Origin sensor (1 pc) *1 *2 *3

N	None
A	Inside motor side
B	Inside motor opposite side
C	Outside motor side
D	Outside motor opposite side

(I) Limit sensor (2 pcs) *1 *2 *3

N	None
A	Inside
B	Outside

(J) Grease nipple *3 *4 *5

N	None (Body mounting direction: Standard)
R	Right
L	Counterclockwise

(K) Positioning pin hole

N	None
P	Yes

(L) Metal stopper specifications (ETS-X)

	Standard
X	Yes

Manufacturer	□56	□60
Oriental Motor Co., Ltd.	-	A
MinebeaMitsumi Inc.	B	-
Dyadic Systems Co., Ltd.	C	-

*Refer to page 587 for the motor model No.

*1: Origin sensor and limit sensor are available as a set. As it is both-or-nothing, select "None" for both.
*2: For sensor inside mounting, the user cannot adjust the position. (Assembled at shipment)
For sensor outside mounting, the user can adjust the position. (Included at shipment)
*3: Contact CKD to use the origin sensor, limit sensor and grease nipple in the same direction.
*4: "Body mounting direction: Standard" here indicates that either top or bottom mounting is possible.
*5: When selecting motor mounting direction R, grease nipple R cannot be selected.
When selecting L, grease nipple L cannot be selected.

Specifications

Applicable motor size *1		□56, □60 stepper motor			
Drive method		Ball screw ø16			
Ball screw accuracy grade		C7			
Stroke length	mm	50 to 1050			
Screw lead	mm	5	10	16	20
Max. load capacity *1	Horizontal kg	70	47	30	24
	Vertical kg	17	12	6	4
Max. speed	mm/s	250	500	800	1000
Rated thrust *1	N	1388	694	433	347
Repeatability	mm	±0.01			
Lost motion	mm	0.1 or less			
Drive system weight	kg	1.0			
Other inertia	kg·cm²	0.870			
Coefficient of friction		0.05			
Mechanical efficiency		0.8			
Ball screw length		Stroke + 200			
Dynamic allowable load	N	4822			
Static allowable moment	N·m	MP: 175, MY: 174, MR: 153			
Dynamic allowable moment	N·m	MP: 45.1, MY: 45.1, MR: 191.7			
Operating ambient temperature, humidity		0 to 40°C (no freezing) 35 to 80% RH (no condensation)			
Storage ambient temperature, humidity		-10 to 50°C (no freezing) 35 to 80% RH (no condensation)			
Atmosphere		No corrosive gas, explosive gas, or dust			

*1 The rated thrust and max. load capacity values are the allowable values for the actuator body; the actual thrust and load capacity are limited by the motor used.

Stroke and max. speed

(mm/s)

Stroke length / Screw lead	100 to 750	800	850	900	950	1050
5	250	225	200	175	150	125
10	500	450	400	350	300	250
16	800	720	640	560	480	400
20	1000	900	800	700	600	500

*The max. speed is the speed when the motor mounted by the customer can output a rotation speed of 3000 rpm.

Allowable overhang length

*Refer to page 626 for details.

Moment direction

MP MY MR

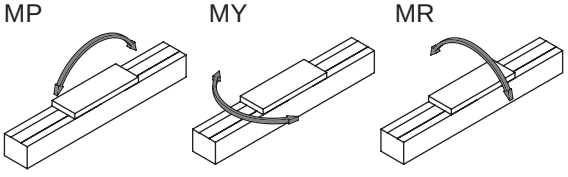

Dimensions Motor right-side mounting

● ETS-13-*****-R

· Refer to page 632 for grease nipple dimensions.

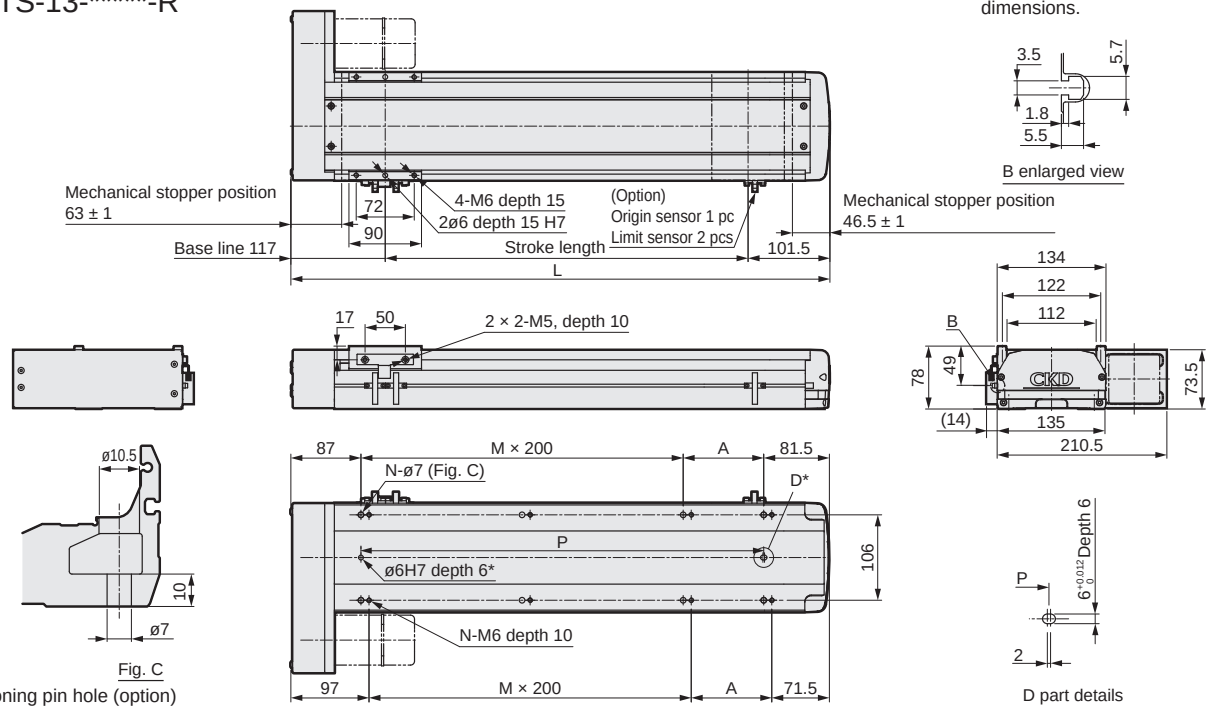

*Positioning pin hole (option)

Stroke length (mm)	50	100	150	200	250	300	350	400	450	500	550	600	650	700	750	800	850	900	950	1000	1050
L	268.5	318.5	368.5	418.5	468.5	518.5	568.5	618.5	668.5	718.5	768.5	818.5	868.5	918.5	968.5	1018.5	1068.5	1118.5	1168.5	1218.5	1268.5
A	100	150	200	50	100	150	200	50	100	150	200	50	100	150	200	50	100	150	200	50	100
M	0	0	0	1	1	1	1	2	2	2	2	3	3	3	3	4	4	4	4	5	5
N	4	4	4	6	6	6	6	8	8	8	8	10	10	10	10	12	12	12	12	14	14
P	100	150	200	250	300	350	400	450	500	550	600	650	700	750	800	850	900	950	1000	1050	1100
Weight (kg)	6.7	7.3	7.7	8.2	8.7	9.2	9.7	10.1	10.7	11.1	11.7	12.1	12.6	13.1	13.6	14.1	14.6	15.1	15.6	16.0	16.6

Motor mounting part

● ETS-13 (□56)

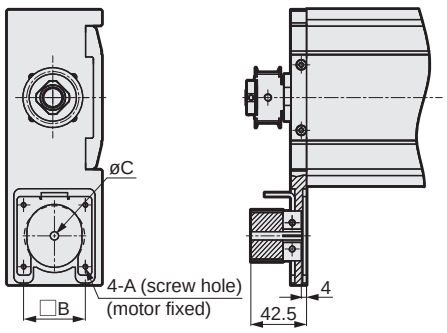

● ETS-13 (□60)

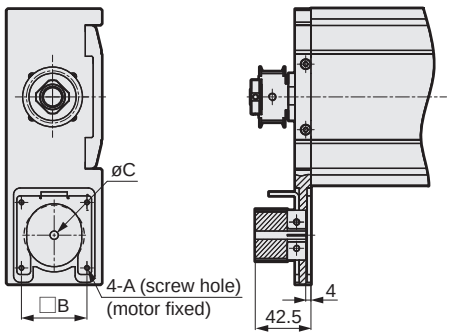

Mounted motor specification		A	B	C	Motor mounting bolt
A	□60	M4	50	10	4-M4 × L20
B	□56	M4	47.14	6.35	4-M4 × L20
C	□56	M4	47.14	8	4-M4 × L20

List of attachments

[Motor mounting parts]

Mounted motor specification	Timing belt/ pulley	Motor size	Motor mounting bolt	
			Size	Quantity
A	Included at shipment	□56 □60	M4	4
B			M4	4
C			M4	4

[Origin sensor/Limit sensor]

Manufacturer	Model	Quantity
OMRON Corporation	EE-SX672	3

*Refer to page 630 for sensor specifications.

Dimensions Motor bottom mounting

● ETS-13-*****-D

· Refer to page 632 for grease nipple dimensions.

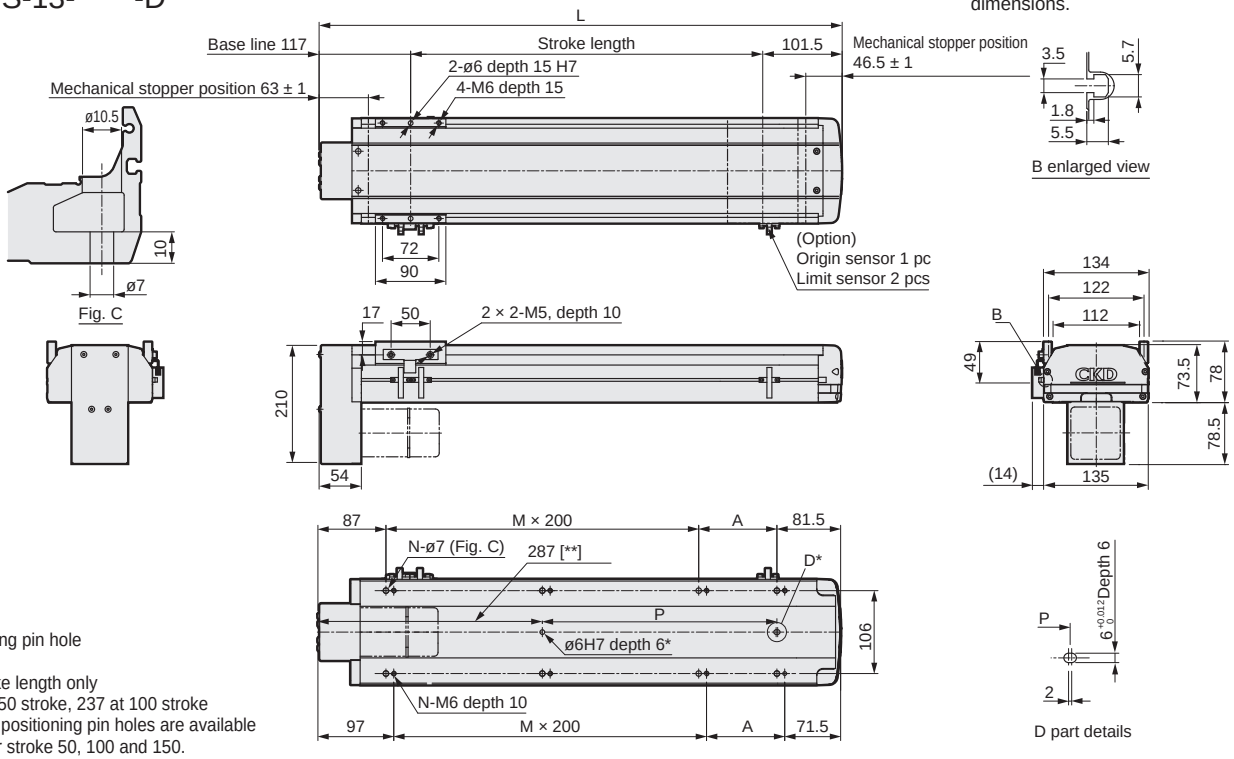

*Positioning pin hole (option)
**50 stroke length only
** 187 at 50 stroke, 237 at 100 stroke
Round positioning pin holes are available only for stroke 50, 100 and 150.

Stroke length (mm)	50	100	150	200	250	300	350	400	450	500	550	600	650	700	750	800	850	900	950	1000	1050
L	268.5	318.5	368.5	418.5	468.5	518.5	568.5	618.5	668.5	718.5	768.5	818.5	868.5	918.5	968.5	1018.5	1068.5	1118.5	1168.5	1218.5	1268.5
A	0	150	200	50	100	150	200	50	100	150	200	50	100	150	200	50	100	150	200	50	100
M	0	0	0	1	1	1	1	2	2	2	2	3	3	3	3	4	4	4	4	5	5
N	4	4	4	6	6	6	6	8	8	8	8	10	10	10	10	12	12	12	12	14	14
P	0	0	0	50	100	150	200	250	300	350	400	450	500	550	600	650	700	750	800	850	900
Weight (kg)	6.7	7.3	7.7	8.2	8.7	9.2	9.7	10.1	10.7	11.1	11.7	12.1	12.6	13.1	13.6	14.1	14.6	15.1	15.6	16.0	16.6

Motor mounting part

● ETS-13 (□ 56)

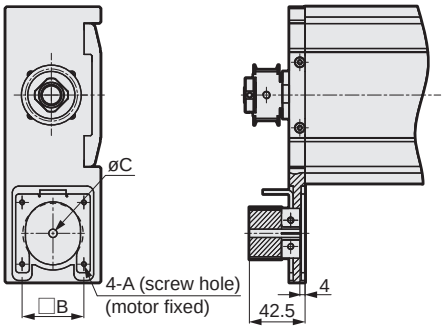

● ETS-13 (□ 60)

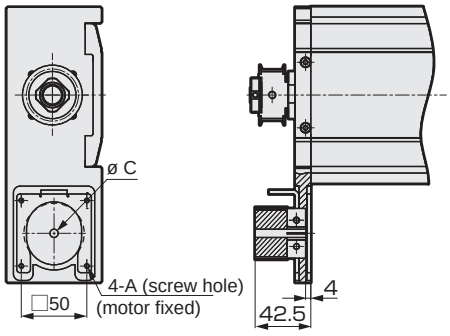

Mounted motor specification		A	B	C	Motor mounting bolt
A	□ 60	M4	50	10	4-M4 × L20
B	□ 56	M4	47.14	6.35	4-M4 × L20
C	□ 56	M4	47.14	8	4-M4 × L20

List of attachments

[Motor mounting parts]

Mounted motor specification	Timing belt/ pulley	Motor size	Motor mounting bolt	
			Size	Quantity
A	Included at shipment	□ 56 □ 60	M4	4
B			M4	4
C			M4	4

[Origin sensor/Limit sensor]

Manufacturer	Model	Quantity
OMRON Corporation	EE-SX672	3

*Refer to page 630 for sensor specifications.

Dimensions Motor left-side mounting

● ETS-13-*****-L

· Refer to page 632 for grease nipple dimensions.

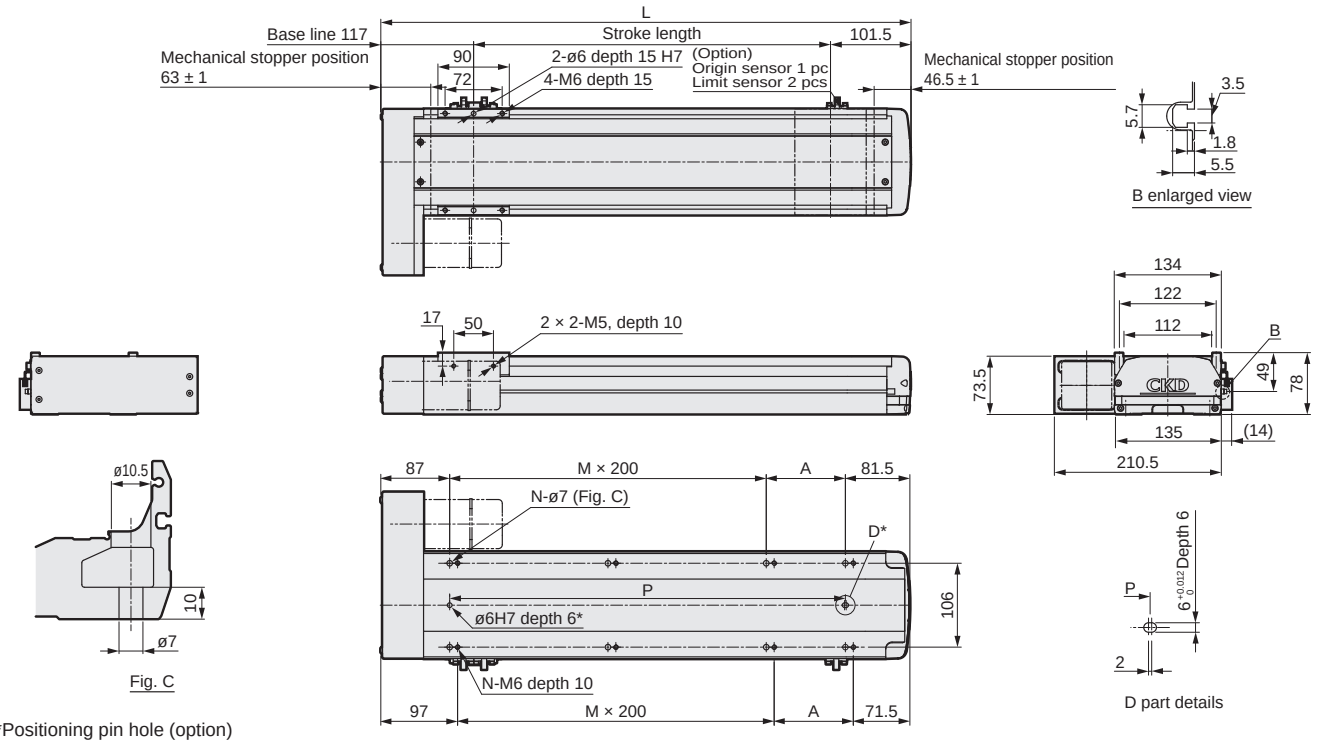

*Positioning pin hole (option)

Stroke length (mm)	50	100	150	200	250	300	350	400	450	500	550	600	650	700	750	800	850	900	950	1000	1050
L	268.5	318.5	368.5	418.5	468.5	518.5	568.5	618.5	668.5	718.5	768.5	818.5	868.5	918.5	968.5	1018.5	1068.5	1118.5	1168.5	1218.5	1268.5
A	100	150	200	50	100	150	200	50	100	150	200	50	100	150	200	50	100	150	200	50	100
M	0	0	0	1	1	1	1	2	2	2	2	3	3	3	3	4	4	4	4	5	5
N	4	4	4	6	6	6	6	8	8	8	8	10	10	10	10	12	12	12	12	14	14
P	100	150	200	250	300	350	400	450	500	550	600	650	700	750	800	850	900	950	1000	1050	1100
Weight (kg)	6.7	7.3	7.7	8.2	8.7	9.2	9.7	10.1	10.7	11.1	11.7	12.1	12.6	13.1	13.6	14.1	14.6	15.1	15.6	16.0	16.6

Motor mounting part

● ETS-13 (□56)

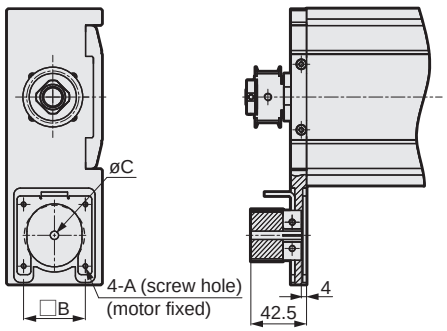

● ETS-13 (□60)

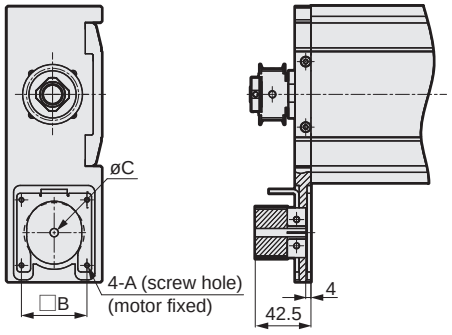

Mounted motor specification		A	B	C	Motor mounting bolt
A	□60	M4	50	10	4-M4 × L20
B	□56	M4	47.14	6.35	4-M4 × L20
C	□56	M4	47.14	8	4-M4 × L20

List of attachments

[Motor mounting parts]

Mounted motor specification	Timing belt/ pulley	Motor size	Motor mounting bolt	
			Size	Quantity
A	Included at shipment	□56 □60	M4	4
B			M4	4
C			M4	4

[Origin sensor/Limit sensor]

Manufacturer	Model	Quantity
OMRON Corporation	EE-SX672	3

*Refer to page 630 for sensor specifications.



Electric actuator Ball screw drive Slider

ETS-14 Series

Straight motor mounting

● Stepper motor size: □56, □60

How to order

ETS - 14 - 05 - 005 - E A B N N N N N - X

(A) (B) (C) (D) (E) (F) (G) (H) (I) (J) (K) (L)

(A) Body size	
14	Body width 135 mm

(B) Screw lead	
05	5 mm
10	10 mm
16	16 mm
20	20 mm

(C) Stroke length	
005 to 105	50 mm (In 50 mm increments) 1050 mm

(D) Motor mounting direction	
E	Straight mounting

(E) Mounted motor specification	
A	Select the mounted motor specification from the table below.
B	
C	

(F) Motor size	
B	□56
C	□60

(G) Brake	
N	None

(H) Origin sensor (1 pc) *1 *2 *3	
N	None
A	Inside motor side
B	Inside motor opposite side
C	Outside motor side
D	Outside motor opposite side

(I) Limit sensor (2 pcs) *1 *2 *3	
N	None
A	Inside
B	Outside

(J) Grease nipple *3 *4	
N	None (Body mounting direction: Standard)
R	Right
L	Counterclockwise

(K) Positioning pin hole	
N	None
P	Yes

(L) Metal stopper specifications (ETS-X)	
	Standard
X	Yes

*1: Origin sensor and limit sensor are available as a set. As it is both-or-nothing, select "None" for both.
*2: For sensor inside mounting, the user cannot adjust the position. (Assembled at shipment)
For sensor outside mounting, the user can adjust the position. (Included at shipment)
*3: Contact CKD to use the origin sensor, limit sensor and grease nipple in the same direction.
*4: "Body mounting direction: Standard" here indicates that either top or bottom mounting is possible.

Manufacturer	□56	□60
Oriental Motor Co., Ltd.	-	A
MinebeaMitsumi Inc.	B	-
Dyadic Systems Co., Ltd.	C	-

*Refer to page 587 for the motor model No.

Specifications

Applicable motor sizes		□56, □60 stepper motor			
Drive method		Ball screw ø16			
Ball screw accuracy grade		C7			
Stroke length	mm	50 to 1050			
Screw lead	mm	5	10	16	20
Max. load capacity *1	Horizontal kg	110	88	48	40
	Vertical kg	33	22	10	8
Max. speed	mm/s	250	500	800	1000
Rated thrust *1	N	1388	694	433	347
Repeatability	mm	±0.01			
Lost motion	mm	0.1 or less			
Drive system weight	kg	1.6			
Other inertia	kg·cm²	0.074			
Coefficient of friction		0.05			
Mechanical efficiency		0.8			
Ball screw length		Stroke + 200			
Dynamic allowable load	N	6567			
Static allowable moment	N·m	MP: 552.0, MY: 551.0, MR: 485.0			
Dynamic allowable moment	N·m	MP: 262.7, MY: 262.7, MR: 261.0			
Operating ambient temperature, humidity		0 to 40°C (no freezing) 35 to 80% RH (no condensation)			
Storage ambient temperature, humidity		-10 to 50°C (no freezing) 35 to 80% RH (no condensation)			
Atmosphere		No corrosive gas, explosive gas, or dust			

*1 The rated thrust and max. load capacity values are the allowable values for the actuator body; the actual thrust and load capacity are limited by the motor used.

Stroke and max. speed

(mm/s)

Screw lead \ Stroke length	100 to 750	800	850	900	950	1050
5	250	225	200	175	150	125
10	500	450	400	350	300	250
16	800	720	640	560	480	400
20	1000	900	800	700	600	500

*The max. speed is the speed when the motor mounted by the customer can output a rotation speed of 3000 rpm.

Allowable overhang length

*Refer to page 626 for details.

Moment direction

MP MY MR

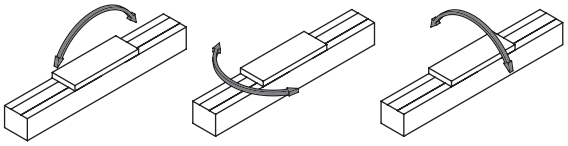

Dimensions Straight motor mounting

● ETS-14-*****-E

· Refer to page 632 for grease nipple dimensions.

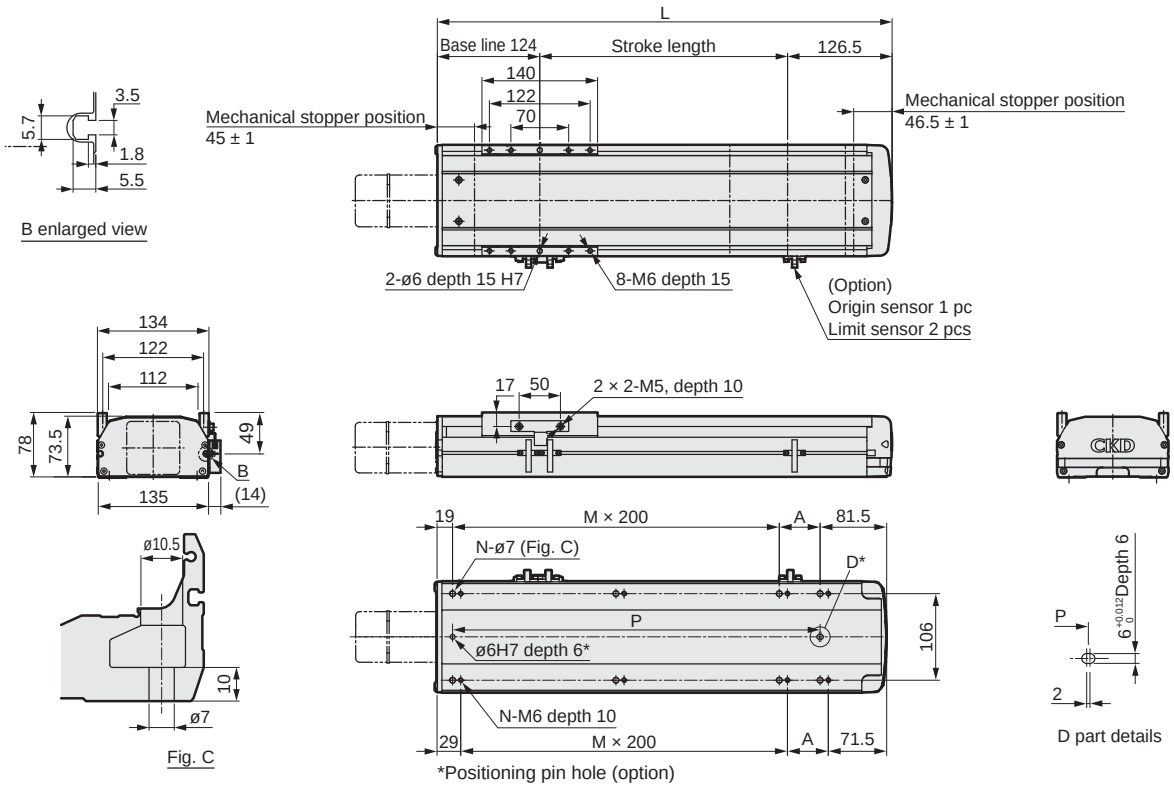

Stroke length (mm)	50	100	150	200	250	300	350	400	450	500	550	600	650	700	750	800	850	900	950	1000	1050
L	300.5	350.5	400.5	450.5	500.5	550.5	600.5	650.5	700.5	750.5	800.5	850.5	900.5	950.5	1000.5	1050.5	1100.5	1150.5	1200.5	1250.5	1300.5
A	200	50	100	150	200	50	100	150	200	50	100	150	200	50	100	150	200	50	100	150	200
M	0	1	1	1	1	2	2	2	2	3	3	3	3	4	4	4	4	5	5	5	5
N	4	6	6	6	6	8	8	8	8	10	10	10	10	12	12	12	12	14	14	14	14
P	200	250	300	350	400	450	500	550	600	650	700	750	800	850	900	950	1000	1050	1100	1150	1200
Weight (kg)	6.1	6.7	7.1	7.6	8.1	8.6	9.1	9.5	10.1	10.5	11.1	11.5	12.0	12.5	13.0	13.5	14.0	14.5	15.0	15.4	16.0

Motor mounting part

● ETS-14 (□56)

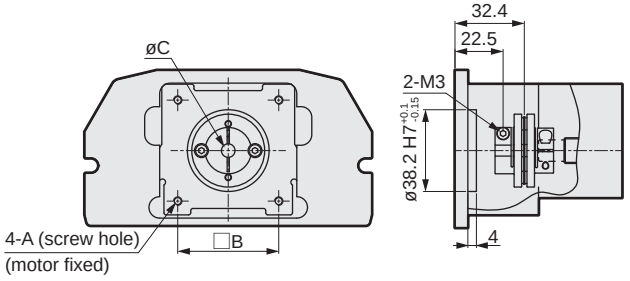

● ET4-14 (□60)

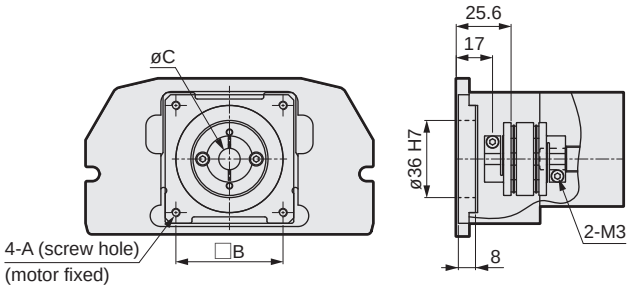

Mounted motor specification		A	B	C	Motor mounting bolt
A	□60	M4	50	10	4-M4 × L20
B	□56	M4	47.14	6.35	4-M4 × L16
C	□56	M4	47.14	8	4-M4 × L16

List of attachments

[Motor mounting parts]

Mounted motor specification	Coupling	Motor size	Motor mounting bolt	
			Size	Quantity
A	Assembled at shipment	□56 □60	M4	4
B			M4	4
C			M4	4

[Origin sensor/Limit sensor]

Manufacturer	Model	Quantity
OMRON Corporation	EE-SX672	3

*Refer to page 630 for sensor specifications.



Electric actuator Ball screw drive Slider

ETS-14 Series

Motor side mounting (left, right, bottom)

● Stepper motor size: □56, □60

How to order

ETS - 14 - 05 005 - R A B N N N N N - X

(A) (B) (C) (D) (E) (F) (G) (H) (I) (J) (K) (L)

(A) Body size

14	Body width 135 mm

(B) Screw lead

05	5 mm
10	10 mm
16	16 mm
20	20 mm

(C) Stroke length

005 to 105	50 mm (In 50 mm increments) 1050 mm

(D) Motor mounting direction *5

R	Right mounting
D	Bottom mounting
L	Left mounting

(E) Mounted motor specification

A	Select the mounted motor specification from the table below.
B	
C	

(F) Motor size

B	□56
C	□60

(G) Brake

N	None

(H) Origin sensor (1 pc) *1 *2 *3

N	None
A	Inside motor side
B	Inside motor opposite side
C	Outside motor side
D	Outside motor opposite side

(I) Limit sensor (2 pcs) *1 *2 *3

N	None
A	Inside
B	Outside

(J) Grease nipple *3 *4 *5

N	None (Body mounting direction: Standard)
R	Right
L	Counterclockwise

(K) Positioning pin hole

N	None
P	Yes

(L) Metal stopper specifications (ETS-X)

	Standard
X	Yes

*1: Origin sensor and limit sensor are available as a set. As it is both-or-nothing, select "None" for both.
*2: For sensor inside mounting, the user cannot adjust the position. (Assembled at shipment)
For sensor outside mounting, the user can adjust the position. (Included at shipment)
*3: Contact CKD to use the origin sensor, limit sensor and grease nipple in the same direction.
*4: "Body mounting direction: Standard" here indicates that either top or bottom mounting is possible.
*5: When selecting motor mounting direction R, grease nipple R cannot be selected.
When selecting L, grease nipple L cannot be selected.

Manufacturer	□56	□60
Oriental Motor Co., Ltd.	-	A
MinebeaMitsumi Inc.	B	-
Dyadic Systems Co., Ltd.	C	-

*Refer to page 587 for the motor model No.

Specifications

Applicable motor sizes		□56, □60 stepper motor			
Drive method		Ball screw ø16			
Ball screw accuracy grade		C7			
Stroke length *1	mm	50 to 1050			
Screw lead	mm	5	10	16	20
Max. load capacity *1	Horizontal kg	110	88	48	40
	Vertical kg	33	22	10	8
Max. speed	mm/s	250	500	800	1000
Rated thrust *1	N	1388	694	433	347
Repeatability	mm	±0.01			
Lost motion	mm	0.1 or less			
Drive system weight	kg	1.6			
Other inertia	kg·cm²	0.870			
Coefficient of friction		0.05			
Mechanical efficiency		0.8			
Ball screw length		Stroke + 200			
Dynamic allowable load	N	6567			
Static allowable moment	N·m	MP: 552.0, MY: 551.0, MR: 485.0			
Dynamic allowable moment	N·m	MP: 262.7, MY: 262.7, MR: 261.0			
Operating ambient temperature, humidity		0 to 40°C (no freezing) 35 to 80% RH (no condensation)			
Storage ambient temperature, humidity		-10 to 50°C (no freezing) 35 to 80% RH (no condensation)			
Atmosphere		No corrosive gas, explosive gas, or dust			

*1 The rated thrust and max. load capacity values are the allowable values for the actuator body; the actual thrust and load capacity are limited by the motor used.

Stroke and max. speed

(mm/s)

Stroke length / Screw lead	100 to 750	800	850	900	950	1050
5	250	225	200	175	150	125
10	500	450	400	350	300	250
16	800	720	640	560	480	400
20	1000	900	800	700	600	500

*The max. speed is the speed when the motor mounted by the customer can output a rotation speed of 3000 rpm.

Allowable overhang length

*Refer to page 626 for details.

Moment direction

MP MY MR

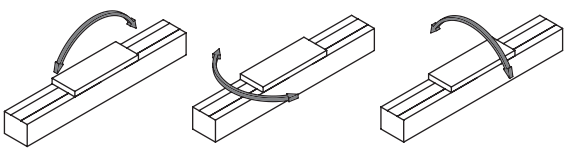

Dimensions Motor right-side mounting

● ETS-14-*****-R

· Refer to page 632 for grease nipple dimensions.

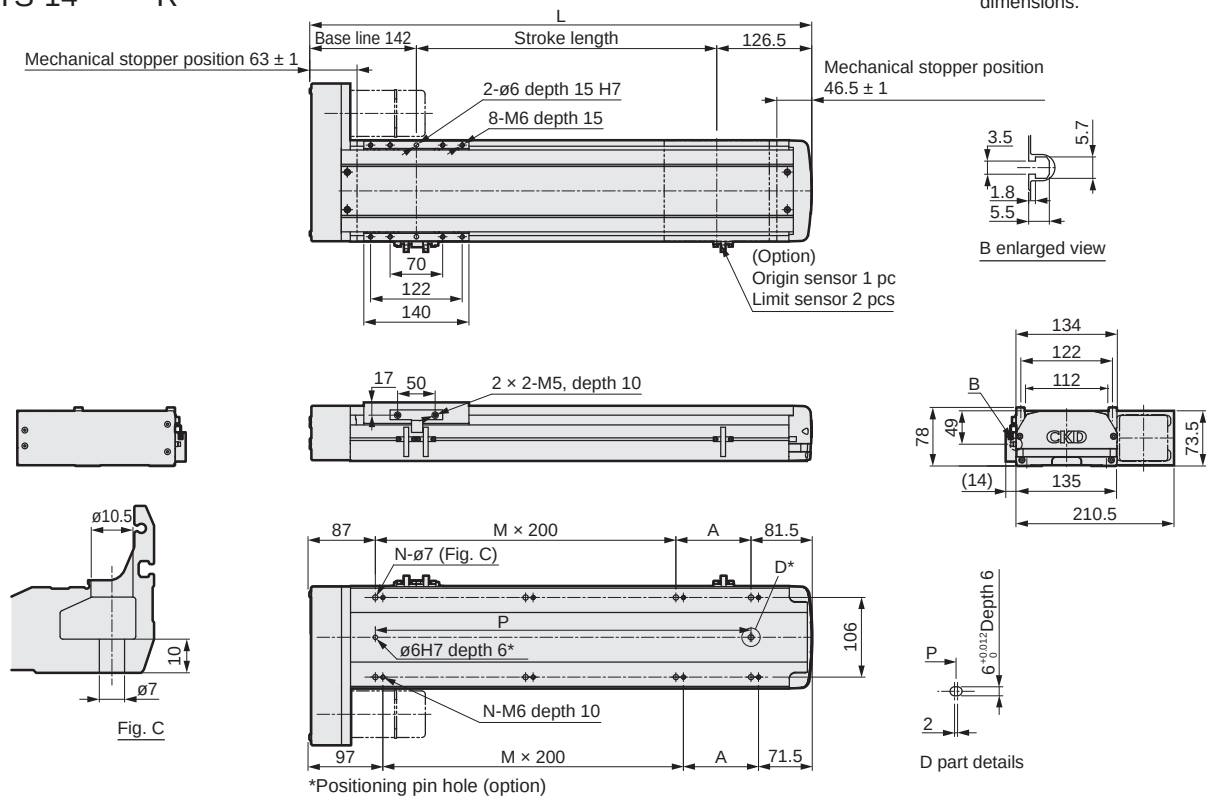

Stroke length (mm)	50	100	150	200	250	300	350	400	450	500	550	600	650	700	750	800	850	900	950	1000	1050
L	318.5	368.5	418.5	468.5	518.5	568.5	618.5	668.5	718.5	768.5	818.5	868.5	918.5	968.5	1018.5	1068.5	1118.5	1168.5	1218.5	1268.5	1318.5
A	150	200	50	100	150	200	50	100	150	200	50	100	150	200	50	100	150	200	50	100	150
M	0	0	1	1	1	1	2	2	2	2	3	3	3	3	4	4	4	4	5	5	5
N	4	4	6	6	6	6	8	8	8	8	10	10	10	10	12	12	12	12	14	14	14
P	150	200	250	300	350	400	450	500	550	600	650	700	750	800	850	900	950	1000	1050	1100	1150
Weight (kg)	6.9	7.5	7.9	8.4	8.9	9.4	9.9	10.3	10.9	11.3	11.9	12.3	12.8	13.3	13.8	14.3	14.8	15.3	15.8	16.2	16.8

Motor mounting part

● ETS-14 (□56)

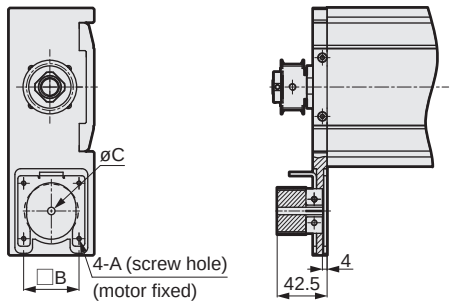

● ETS-14 (□60)

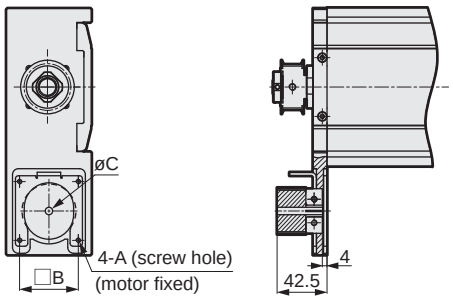

Mounted motor specification		A	B	C	Motor mounting bolt
A	□60	M4	50	10	4-M4 × L20
B	□56	M4	47.14	6.35	4-M4 × L20
C	□56	M4	47.14	8	4-M4 × L20

List of attachments

[Motor mounting parts]

Mounted motor specification	Timing belt, pulley	Motor size	Motor mounting bolt	
			Size	Quantity
A	Included at shipment	□56 □60	M4	4
B			M4	4
C			M4	4

[Origin sensor/Limit sensor]

Manufacturer	Model	Quantity
OMRON Corporation	EE-SX672	3

*Refer to page 630 for sensor specifications.

Dimensions Motor bottom mounting

● ETS-14-*****-D

· Refer to page 632 for grease nipple dimensions.

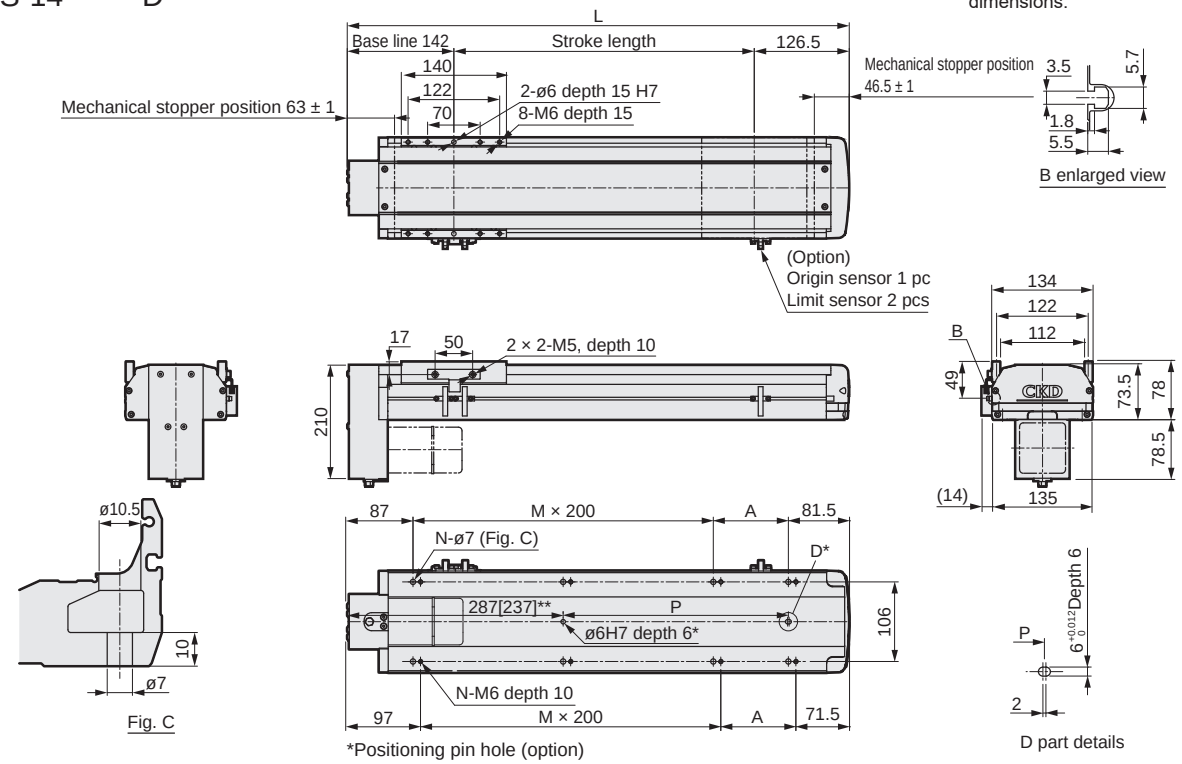

*Positioning pin hole (option)
** 50 stroke only
Only round positioning pin holes are available for strokes 50 and 100.

Stroke length (mm)	50	100	150	200	250	300	350	400	450	500	550	600	650	700	750	800	850	900	950	1000	1050
L	318.5	368.5	418.5	468.5	518.5	568.5	618.5	668.5	718.5	768.5	818.5	868.5	918.5	968.5	1018.5	1068.5	1118.5	1168.5	1218.5	1268.5	1318.5
A	150	200	50	100	150	200	50	100	150	200	50	100	150	200	50	100	150	200	50	100	150
M	0	0	1	1	1	1	2	2	2	2	3	3	3	3	4	4	4	4	5	5	5
N	4	4	6	6	6	6	8	8	8	8	10	10	10	10	12	12	12	12	14	14	14
P	0	0	50	100	150	200	250	300	350	400	450	500	550	600	650	700	750	800	850	900	950
Weight (kg)	6.9	7.5	7.9	8.4	8.9	9.4	9.9	10.3	10.9	11.3	11.9	12.3	12.8	13.3	13.8	14.3	14.8	15.3	15.8	16.2	16.8

Motor mounting part

● ETS-14 (□ 56)

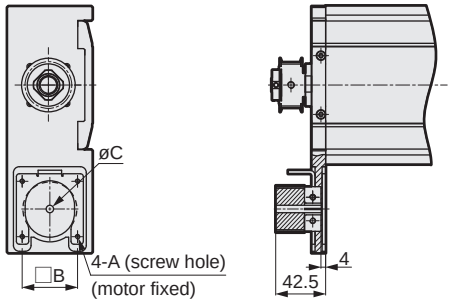

● ETS-14 (□ 60)

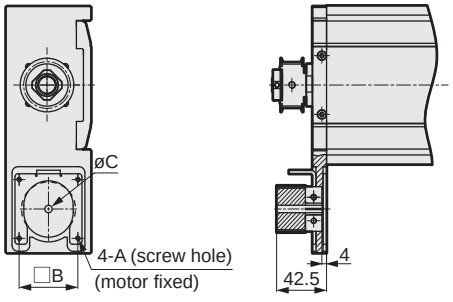

Mounted motor specification		A	B	C	Motor mounting bolt
A	□ 60	M4	50	10	4-M4 × L20
B	□ 56	M4	47.14	6.35	4-M4 × L20
C	□ 56	M4	47.14	8	4-M4 × L20

List of attachments

[Motor mounting parts]

Mounted motor specification	Timing belt, pulley	Motor size	Motor mounting bolt	
			Size	Quantity
A	Included at shipment	□ 56 □ 60	M4	4
B			M4	4
C			M4	4

[Origin sensor/Limit sensor]

Manufacturer	Model	Quantity
OMRON Corporation	EE-SX672	3

*Refer to page 630 for sensor specifications.

Dimensions Motor left-side mounting

● ETS-14-*****-L

· Refer to page 632 for grease nipple dimensions.

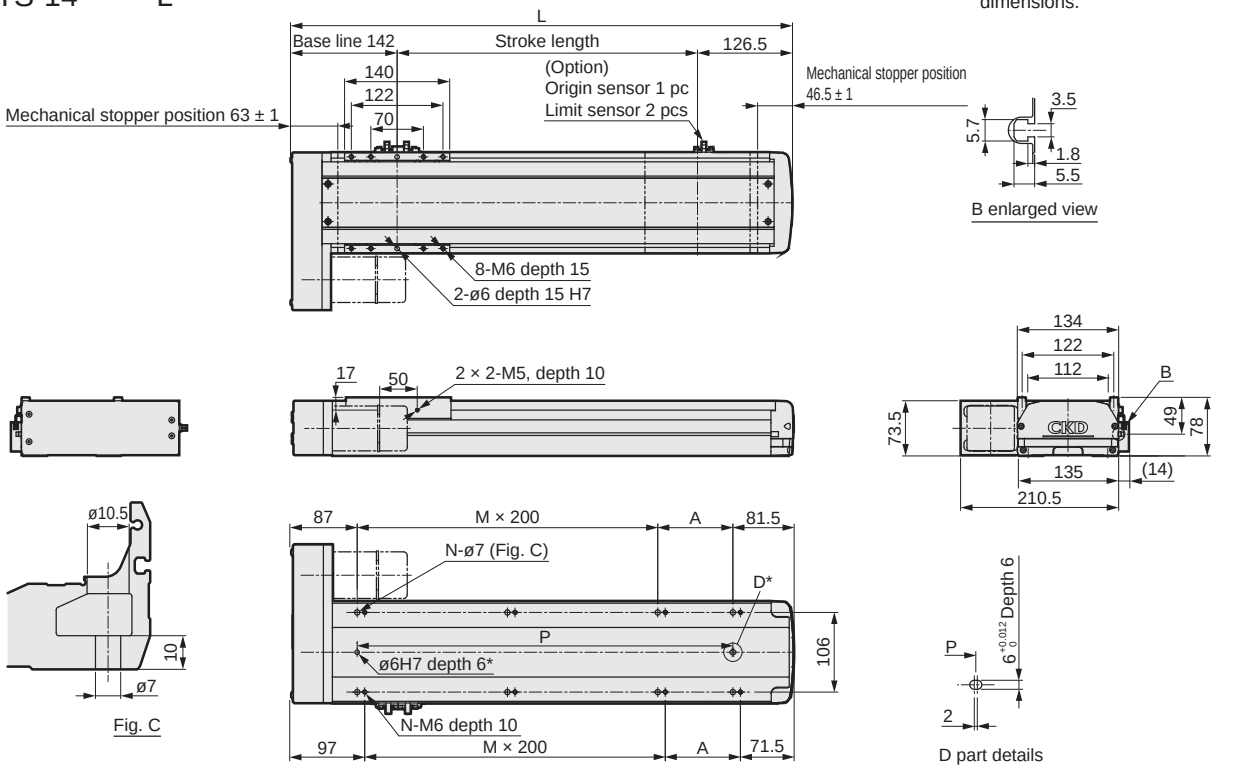

*Positioning pin hole (option)

Stroke length (mm)	50	100	150	200	250	300	350	400	450	500	550	600	650	700	750	800	850	900	950	1000	1050
L	318.5	368.5	418.5	468.5	518.5	568.5	618.5	668.5	718.5	768.5	818.5	868.5	918.5	968.5	1018.5	1068.5	1118.5	1168.5	1218.5	1268.5	1318.5
A	150	200	50	100	150	200	50	100	150	200	50	100	150	200	50	100	150	200	50	100	150
M	0	0	1	1	1	1	2	2	2	2	3	3	3	3	4	4	4	4	5	5	5
N	4	4	6	6	6	6	8	8	8	8	10	10	10	10	12	12	12	12	14	14	14
P	150	200	250	300	350	400	450	500	550	600	650	700	750	800	850	900	950	1000	1050	1100	1150
Weight (kg)	6.9	7.5	7.9	8.4	8.9	9.4	9.9	10.3	10.9	11.3	11.9	12.3	12.8	13.3	13.8	14.3	14.8	15.3	15.8	16.2	16.8

Motor mounting part

● ETS-14 (□56)

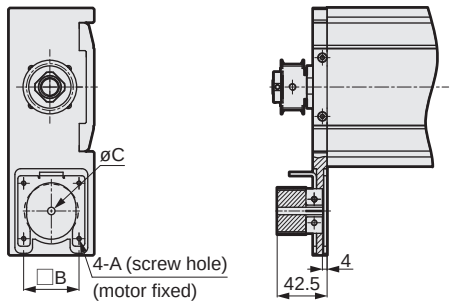

● ETS-14 (□60)

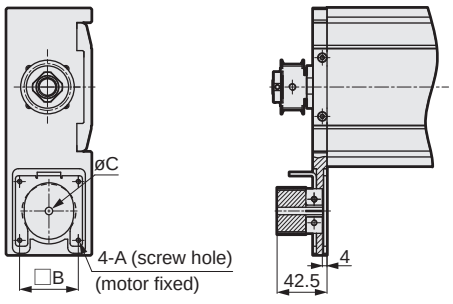

Mounted motor specification		A	B	C	Motor mounting bolt
A	□60	M4	50	10	4-M4 × L20
B	□56	M4	47.14	6.35	4-M4 × L20
C	□56	M4	47.14	8	4-M4 × L20

List of attachments

[Motor mounting parts]

Mounted motor specification	Timing belt, pulley	Motor size	Motor mounting bolt	
			Size	Quantity
A	Included at shipment	□56 □60	M5	4
B			M5	4
C			M4	4

[Origin sensor/Limit sensor]

Manufacturer	Model	Quantity
OMRON Corporation	EE-SX672	3

*Refer to page 630 for sensor specifications.

Model selection

STEP 1 Confirming load capacity

Load capacity varies with mounting orientation, screw lead and motor performance.
Refer to the selection table (page 584) and the specification table for each model to select the size and screw lead.
For motor performance, contact the motor manufacturer. For motor selection, use the actuator information (mechanical efficiency, etc.) in the specifications.

STEP 2 Confirming positioning time

Calculate the positioning time of the selected product according to the following example and confirm that the required tact is achievable.
Select the speed and acceleration/deceleration from the specification table for each model and the motor selected by the customer.

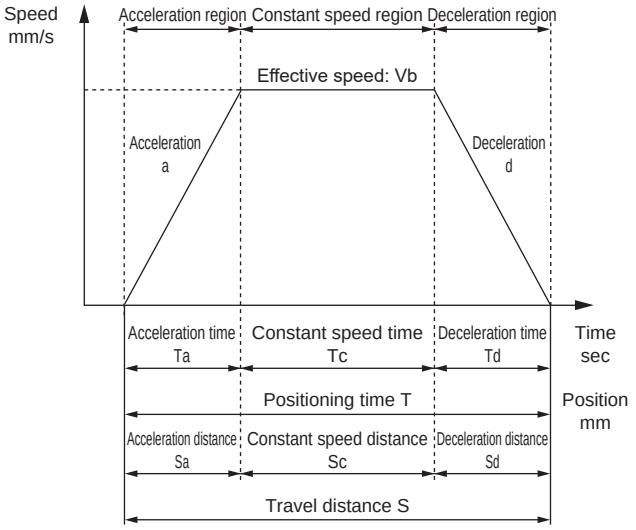

	Description	Code	Unit	Remarks
Set value	Set speed	V	mm/s	
	Set acceleration	a	mm/s^2	
	Set deceleration	d	mm/s^2	
	Travel distance	S	mm	
Calculated value	Achieved speed	Vmax	mm/s	$= \{2 \times a \times d \times S/(a + d)\}^{1/2}$
	Effective speed	Vb	mm/s	Smaller of V and Vmax
	Acceleration time	Ta	s	= Vb/a [0.2 sec or more]
	Deceleration time	Td	s	= Vb/d [0.2 sec or more]
	Constant speed time	Tc	s	= Sc/Vb
	Acceleration distance	Sa	mm	$= (a \times Ta^2)/2$
	Deceleration distance	Sd	mm	$= (d \times Td^2)/2$
	Constant speed distance	Sc	mm	= S - (Sa + Sd)
	Positioning time	T	s	= Ta + Tc + Td

*Do not use at speeds that exceed the specifications.
*The acceleration and deceleration settings related to the acceleration time and deceleration time change depending on the set speed and stroke.
*Depending on acceleration/deceleration and stroke length, the trapezoid speed waveform may not be formed (the set speed may not be achieved). In this case, select the effective speed (Vb) from the set speed (V) and the achieved speed (Vmax), whichever is smaller.
*Use with acceleration time/deceleration time of 0.2 sec or longer.
*1 G ≈ 9.8 m/s^2.
*Set the speed and acceleration/deceleration by the motor selected by the customer. For motor selection and calculation of speed and acceleration/deceleration, use the actuator information (mechanical efficiency, etc.) in the specifications.

STEP 3 Confirming allowable overhang length

Make sure that the load overhang length during operation is within the allowable range (pages 626 to 628).

Contact CKD for selection details.

MEMO

Allowable overhang length (ETS Series)

[When installed horizontally]

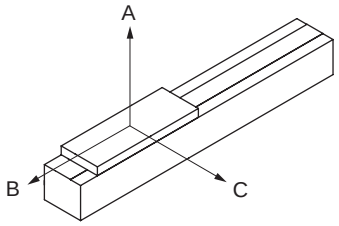

[Allowable overhang length]

● ETS-05

Motor mounted	Acceleration/deceleration time sec	Screw lead	Weight kg	Overhang mm		
				A	B	C
Straight / side/bottom	0.2	2	5	750	45	105
			10	350	20	47
		5	4	480	45	105
			7	300	25	55
		10	3	300	55	110
			5	180	30	65

● ETS-06

Motor mounted	Acceleration/deceleration time sec	Screw lead	Weight kg	Overhang mm		
				A	B	C
Straight / side/bottom	0.2	2	10	400	65	150
			30	150	15	40
		5	10	520	50	110
			30	130	10	25
		10	3	800	145	330
			8	280	50	120
			15	140	23	55

● ETS-10

Motor mounted	Acceleration/deceleration time sec	Screw lead	Weight kg	Overhang mm		
				A	B	C
Straight / side/bottom	0.2	5	30	560	50	50
			50	310	27	27
		10	15	440	90	90
			25	250	50	50
			30	200	40	40
		16	5	950	270	230
			10	480	130	110
			22	200	55	45
		20	5	750	250	200
			10	370	120	95
			15	240	80	60

● ETS-12

Motor mounted	Acceleration/deceleration time sec	Screw lead	Weight kg	Overhang mm		
				A	B	C
Straight / side/bottom	0.2	5	30	900	70	80
			50	420	30	40
		10	15	900	150	160
			25	490	80	85
			30	400	60	70
		16	5	1700	430	450
			10	800	200	220
			22	330	80	85
		20	5	1200	420	400
			10	580	200	190
			15	370	120	120

● ETS-13

Motor mounted	Acceleration/deceleration time sec	Screw lead	Weight kg	Overhang mm		
				A	B	C
Straight / side/bottom	0.2	5	40	800	65	230
			55	560	45	160
			70	430	34	120
		10	25	600	100	280
			35	420	70	195
			47	300	50	145
		16	10	900	230	520
			20	440	115	250
			30	280	75	170
		20	5	1200	430	850
			15	400	140	270
			24	250	85	160

● ETS-14

Motor mounted	Acceleration/deceleration time sec	Screw lead	Weight kg	Overhang mm		
				A	B	C
Straight / side/bottom	0.2	5	60	2300	250	240
			80	1600	180	170
			110	1150	120	115
		10	30	2000	500	450
			50	1400	280	250
			88	700	140	125
		16	10	2200	1200	1000
			20	1600	600	500
			48	900	260	220
		20	10	2300	1200	1000
			20	1400	600	500
			40	850	280	230

*The above values are the allowable values for the actuator body; the actual load capacity is limited by the motor used.
*When suspending from above, use 1/3 of the dynamic allowable load, dynamic allowable moment, and overhang length.
Use overhang length up to the center of gravity of the load within A, B and C directions.

Allowable overhang length (ETS Series)

[When wall-mounted]

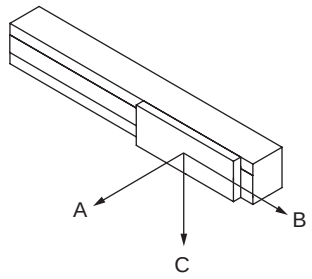

[Allowable overhang length]

● ETS-05

Motor mounted	Acceleration/deceleration time sec	Screw lead	Weight kg	Overhang mm		
				A	B	C
Straight / side/bottom	0.2	2	5	105	45	750
			10	47	20	350
		5	4	100	45	450
			7	55	23	240
		10	3	110	55	400
			5	60	30	230

● ETS-06

Motor mounted	Acceleration/deceleration time sec	Screw lead	Weight kg	Overhang mm		
				A	B	C
Straight / side/bottom	0.2	2	15	110	42	400
			30	45	15	180
		5	5	240	95	1150
			10	115	50	540
			30	25	10	140
		10	3	320	150	700
			8	110	50	250
			15	50	25	120

● ETS-10

Motor mounted	Acceleration/deceleration time sec	Screw lead	Weight kg	Overhang mm		
				A	B	C
Straight / side/bottom	0.2	5	10	160	160	1400
			20	75	75	650
			30	45	45	400
		10	10	130	140	690
			20	60	65	330
			30	40	40	210
		16	5	230	250	750
			10	110	120	370
			22	45	50	160
		20	5	220	250	650
			10	105	120	320
			15	65	75	210

● ETS-12

Motor mounted	Acceleration/deceleration time sec	Screw lead	Weight kg	Overhang mm		
				A	B	C
Straight / side/bottom	0.2	5	10	330	270	2200
			20	145	120	1000
			30	90	70	600
		10	10	260	240	850
			20	115	110	520
			30	70	60	300
		16	5	450	450	1300
			10	210	210	600
			22	80	80	240
		20	5	410	410	1200
			10	190	195	600
			15	120	120	390

● ETS-13

Motor mounted	Acceleration/deceleration time sec	Screw lead	Weight kg	Overhang mm		
				A	B	C
Straight / side/bottom	0.2	5	40	240	70	850
			55	170	50	600
			70	125	35	450
		10	25	300	100	620
			35	210	70	420
			47	150	50	300
		16	10	530	230	900
			20	250	110	430
			30	170	70	280
		20	5	900	450	1300
			15	290	150	420
			24	170	90	260

● ETS-14

Motor mounted	Acceleration/deceleration time sec	Screw lead	Weight kg	Overhang mm		
				A	B	C
Straight / side/bottom	0.2	5	60	240	250	1600
			80	170	180	1200
			110	115	120	1050
		10	30	420	460	1500
			50	240	250	1000
			88	120	130	700
		16	10	1050	1200	2650
			20	500	620	1450
			48	200	230	800
		20	10	1000	1200	1900
			20	500	600	1000
			40	230	290	600

*The above values are the allowable values for the actuator body; the actual load capacity is limited by the motor used.
*When suspending from above, use 1/3 of the dynamic allowable load, dynamic allowable moment, and overhang length.
Use overhang length up to the center of gravity of the load within A, B and C directions.

Allowable overhang length (ETS Series)

[When installed vertically]

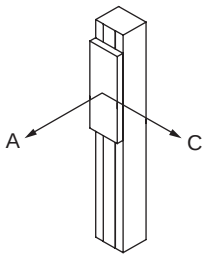

[Allowable overhang length]

● ETS-05

Motor mounted	Acceleration/deceleration time sec	Screw lead	Weight kg	Overhang mm		
				A	B	C
Straight / side/bottom	0.2	2	3	80	-	80
			7	35	-	35
		5	3	65	-	65
		10	1.5	120	-	120

● ETS-06

Motor mounted	Acceleration/deceleration time sec	Screw lead	Weight kg	Overhang mm		
				A	B	C
Straight / side/bottom	0.2	2	5	160	-	160
			15	53	-	53
		5	2	300	-	300
			4	150	-	150
			10	60	-	60
		10	1	410	-	410
			2	205	-	205
			5	82	-	82

● ETS-10

Motor mounted	Acceleration/deceleration time sec	Screw lead	Weight kg	Overhang mm		
				A	B	C
Straight / side/bottom	0.2	5	5	310	-	310
			10	155	-	155
			12	130	-	130
		10	4	360	-	360
			6	240	-	240
			8	180	-	180
		16	1	1050	-	1050
			2	525	-	525
			5	210	-	210
		20	1	850	-	850
			2	425	-	425
			3	283	-	283

● ETS-12

Motor mounted	Acceleration/deceleration time sec	Screw lead	Weight kg	Overhang mm		
				A	B	C
Straight / side/bottom	0.2	5	5	600	-	600
			10	300	-	300
			12	250	-	250
		10	4	650	-	650
			6	430	-	430
			8	320	-	320
		16	1	1050	-	1050
			2	525	-	525
			5	210	-	210
		20	3	650	-	700

● ETS-13

Motor mounted	Acceleration/deceleration time sec	Screw lead	Weight kg	Overhang mm		
				A	B	C
Straight / side/bottom	0.2	5	5	600	-	600
			10	300	-	300
			12	250	-	250
		10	4	650	-	650
			6	430	-	430
			8	320	-	320
		16	1	1350	-	1350
			2	900	-	900
			6	350	-	350
		20	1	1050	-	1050
			2	900	-	900
			4	550	-	550

● ETS-14

Motor mounted	Acceleration/deceleration time sec	Screw lead	Weight kg	Overhang mm		
				A	B	C
Straight / side/bottom	0.2	5	20	755	-	755
			25	605	-	605
			33	455	-	455
		10	10	1350	-	1350
			15	900	-	900
			22	650	-	650
		16	2	2400	-	2400
			4	1700	-	1700
			10	1000	-	1000
		20	4	1800	-	1800
			6	1200	-	1200
			8	900	-	900

*The above values are the allowable values for the actuator body; the actual load capacity is limited by the motor used.
*When suspending from above, use 1/3 of the dynamic allowable load, dynamic allowable moment, and overhang length.
Use overhang length up to the center of gravity of the load within A, B and C directions.

MEMO

Origin sensor, limit sensor

Manufacturer	Model	Quantity
OMRON Corporation	EE-SX672	3

Performance

Item	Specifications
Hysteresis	0.025 mm or less
Light source (peak emission wavelength)	GaAs infrared LED (940 nm)
Indicator lamp	ON when receiving light (red)
Power supply voltage	5 to 24 VDC ±10% ripple (P-P) 10% or less
Current consumption	35 mA or less (NPN)
Control output	NPN: NPN open collector output 5 to 24 VDC 100 mA or less OFF state current 0.5 mA or less Residual voltage 0.8 V or less (at load current 100 mA) Residual voltage 0.4 V or less (at load current 40 mA)
Operating ambient illumination	Light-receiving surface luminance Fluorescent light: 1,000 lx or less
Ambient temperature range	When operating: -25 to +55°C When stored: -30 to +80°C (no condensation or freezing)
Ambient humidity range	When operating: 5 to 85% RH When stored: 5 to 95% RH (no condensation or freezing)
Degree of protection	IP50 IEC 60529 Standards
Cord length	2 m (Connector with cord [EE-1006 2M])

Output circuit

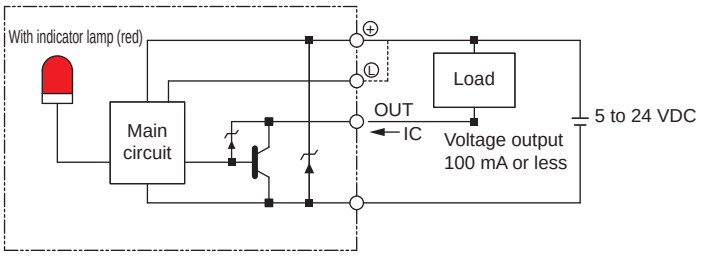

Wiring diagram

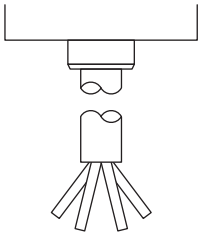

Terminal layout

Brown	5 to 24 VDC
Pink	L
Blue	0 V
Black	OUTPUT

Sensor dog dimensions

	Motor mounting direction
Body size	E/D/R/L
ETS-05	Fig. 1
ETS-06	Fig. 2

Body size	E/D	Motor mounting direction			
		R		L	
		Grease nipple None	Grease nipple Yes	Grease nipple None	Grease nipple Yes
ETS-10	Fig. 3	Fig. 3		Fig. 3	
ETS-12	Fig. 3	Fig. 3	Fig. 4	Fig. 3	Fig. 4

Fig. 1

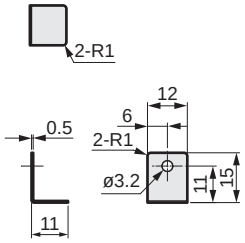

Fig. 2

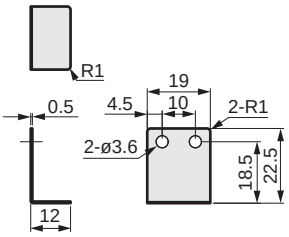

Fig. 3

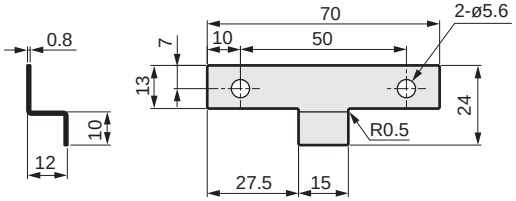

Fig. 4

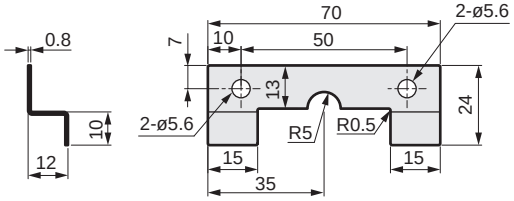

Body size	E/D	Motor mounting direction			
		R		L	
		Grease nipple None	Grease nipple Yes	Grease nipple None	Grease nipple Yes
ETS-13	Fig. 5	Fig. 5	Fig. 6	Fig. 5	Fig. 6
ETS-14	Fig. 5	Fig. 5	Fig. 7	Fig. 5	Fig. 8

Fig. 5

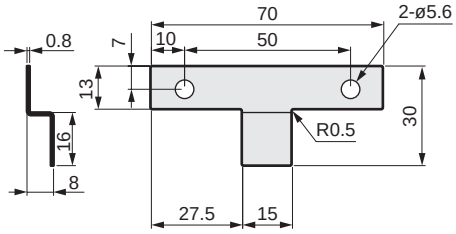

Fig. 6

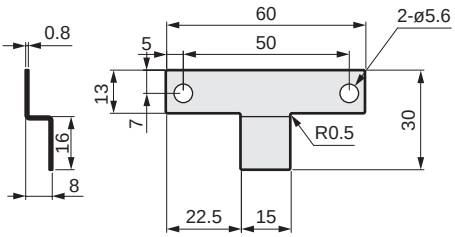

Fig. 7

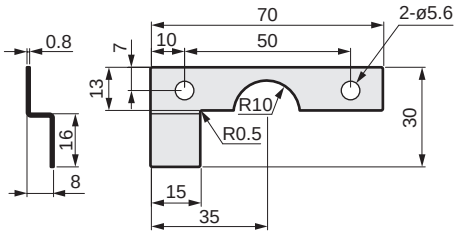

Fig. 8

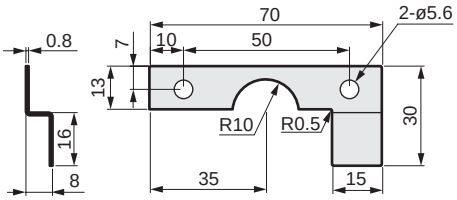

Grease nipple dimensions

*Horizontally symmetrical against the actuator.

● ETS-10

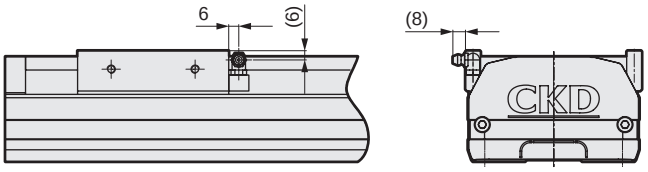

● ETS-12

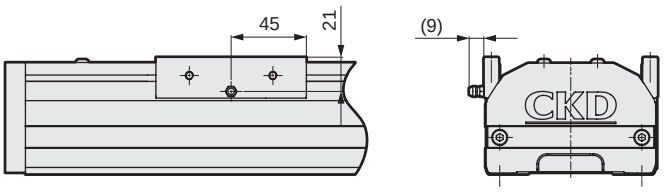

● ETS-13

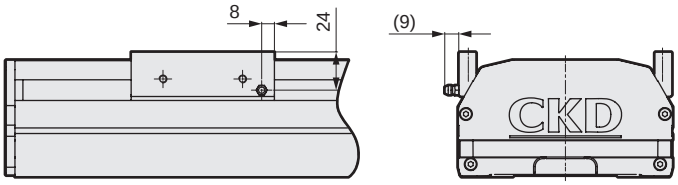

● ETS-14

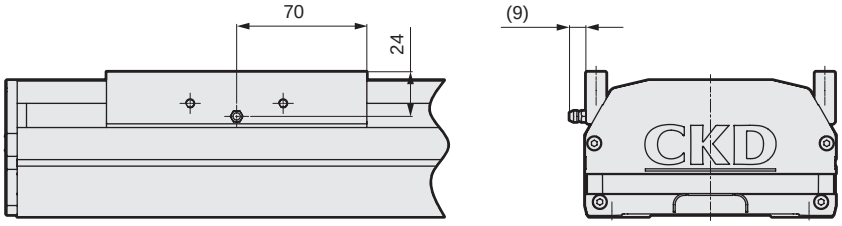

MEMO

List of attachments

Basic

Motor mounting bolt (common motor mounting direction)

Model No.	Mounted motor specification	Motor size	Size	Quantity
ETS-05 ETS-06	A	□42	M3	4
	B		M3	4
ETS-10 ETS-12 ETS-13 ETS-14	A	□56 □60	M4	4
	B		M4	4
	C		M4	4

By motor mounting direction

Model No.	Attachment name	Quantity
E (external direct mounting)	Coupling (Assembled at shipment)	1
R (right-side mounting) L (left-side mounting) D (bottom mounting)	Timing belt	1
	Pulley	1

When origin/limit sensor is selected *1

Sensor mounting direction	Shipping format	Quantity
Inner sensor	Fixed position assembled at shipment	3 *2
Outer sensor	Included at shipment *3	

*1 Shipping format varies according to whether origin sensor and limit sensor are assembled inside or outside.
*2 When "None" is selected for origin sensor or limit sensor, the other sensor is also "None".
*3 Sensor mounting screws are also included.

Maintenance parts

● Maintenance parts (external mounted sensor)

Basic price model No. 	Compatibility	Part
ETS-22008-000001	All models	Body
ETS-22008-000006		Cable

Safety precautions

Stepper motor compatible				Servo motor compatible							
ECS	ETS	EBR	EBS	EKS	ECV	ETV	ECS	ETS Multi-Axis	ETS	EBR	EBS

ECS

Slider (ball screw drive low dust specifications)

Stepper motor
electric actuator
Motorless specifications

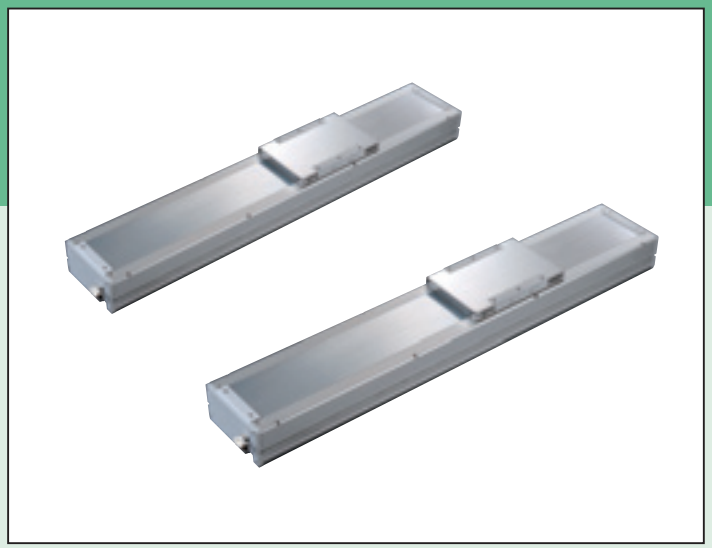

CONTENTS

Product introduction	Intro
Series variation	638
● Specifications/How to order/Dimensions	
· ECS-05	642
· ECS-06	648
· ECS-10	654
· ECS-12	660
· ECS-14	666
● Model selection	672
● Technical data	674
⚠ Safety precautions	686
Model Selection Check Sheet	708

Series variation

Type	Model No.		Applicable motor size	Body width (mm)	Screw lead (mm)	Max. load capacity (kg) *2 Horizontal *1	Max. load capacity (kg) *2 Vertical	Stroke (mm) and max. speed (mm/s) *3	Page
Slider		ETS-05	□42	51	2	10	7	50 100 150 200 250 300 350 400 450 500 550 600 650 700 750 800 850 900 950 1000 1050 1100 1150 1200 1250 1300 1350 1400 1450 1500 mm: 100 mm/s: 90 80 70 60 *4 13.53 sec	588
					5	10	3	250: 225 200 175 150 5.53 sec	
					10	5	1.5	500: 450 400 350 300 2.87 sec	
		ETS-06	□42	65	2	30	15	100: 90 80 70 60 13.53 sec	594
					5	30	10	250: 225 200 175 150 5.53 sec	
					10	15	5	500: 450 400 350 300 2.87 sec	
		ETS-10	□56 □60	102	5	50	12	250: 225 200 175 150 125 8.6 sec	600
					10	30	8	500: 450 400 350 300 250 4.4 sec	
					16	22	5	800: 720 640 560 480 400 2.83 sec	
					20	18	3	1000: 900 800 700 600 500 2.3 sec	
		ETS-12	□56 □60	102	5	50	12	250: 225 200 175 150 125 8.6 sec	606
					10	30	8	500: 450 400 350 300 250 4.4 sec	
					16	22	5	800: 720 640 560 480 400 2.83 sec	
					20	18	3	1000: 900 800 700 600 500 2.3 sec	
		ETS-13	□56 □60	135	5	70	17	250: 225 200 175 150 125 8.6 sec	612
					10	47	12	500: 450 400 350 300 250 4.4 sec	
					16	30	6	800: 720 640 560 480 400 2.83 sec	
					20	24	4	1000: 900 800 700 600 500 2.3 sec	
		ETS-14	□56 □60	135	5	110	33	250: 225 200 175 150 125 8.6 sec	618
					10	88	22	500: 450 400 350 300 250 4.4 sec	
					16	48	10	800: 720 640 560 480 400 2.83 sec	
					20	40	8	1000: 900 800 700 600 500 2.3 sec	

*1: The load capacity when wall mounted is the same as for horizontal installation.
*2: The rated thrust and max. load capacity values are the allowable values for the actuator body; the actual thrust and load capacity are limited by the motor used.
*3: The max. speed is the speed when the motor mounted by the customer can output a rotation speed of 3000 rpm. The max. speed is restricted by the stroke. Do not move at speeds beyond the limit.
*4: ⏱ shows the positioning time. Maximum stroke when installed horizontally and operated at max. speed and max. acceleration/deceleration. Note that this is not the value at maximum load capacity.

How to order

How to order

ECS - 06 - 05 040 - E A A N C B D P - M

Ⓐ Body size

05	Body width 51 mm
06	Body width 65 mm
10	Body width 102 mm
12	Body width 102 mm
14	Body width 135 mm

Ⓑ Screw lead

02	2 mm
05	5 mm
10	10 mm
16	16 mm
20	20 mm

Ⓒ Stroke length

005 to 105	50 mm (In 50 mm increments) 1050 mm

Ⓓ Motor mounting direction *1

E	Straight mounting
R	Right mounting
D	Bottom mounting
L	Left mounting

Ⓔ Mounted motor specification

A B C	Refer to the list on the page at right

Ⓕ Motor size

A	□42
B	□56
C	□60

Ⓖ Brake

N	None

Ⓗ Origin sensor (1 pc) *1

N	None
A	Inside motor side
B	Inside motor opposite side
C	Outside motor side (Included at shipment)
D	Outside motor opposite side (Included at shipment)

Ⓘ Limit sensor (2 pcs) *1

N	None
A	Inside
B	Outside

Ⓙ Grease nipple

N	None (Body mounting direction: Standard)
D	None (Body mounting direction: Bottom side)
R	Right
L	Counterclockwise

Ⓚ Positioning pin hole

N	None
P	Yes

Ⓛ Magnet slider method *2

	Standard
M	Yes

*1: The sensor dog is assembled at shipment regardless of sensor presence.
*2: ECS-05/06 uses the magnet slider method. Other sizes use the standard.

Example of model No.

ECS-06-05040-EAANCBDP-M

Ⓐ Body size : 06 Series
Ⓑ Screw lead : 5 mm
Ⓒ Stroke length : 400 mm
Ⓓ Motor mounting direction : Straight
Ⓔ Mounted motor specification : A (refer to the table on the page at right)
Ⓕ Motor size : □42
Ⓖ Brake : None
Ⓗ Origin sensor : External motor side
Ⓘ Limit sensor : Outside
Ⓙ Grease nipple : None (Body mounting method: Bottom side)
Ⓚ Positioning pin hole : Yes
Ⓛ Magnet slider method : Yes

*This product is composed of an actuator (and motor mounting parts) only; there is no motor attached.
The user must prepare, mount, and adjust the motor and driver.

List of stepper motors recommended for mounting

Code	Manufacturer	Series	□42	□56	□60
A	Oriental Motor Co., Ltd.	AZ	AZM46□0□	-	AZM66□0□ AZM69□0□
		AR	ARM46□0□	-	ARM66□0□ ARM69□0□
B	MinebeaMitsumi Inc.	A17PM/A23KM	A17PM□□□□CSTBCN	A23KM□□□□CSTBCN	-
B	Dyadic Systems Co., Ltd.	RMJ	RMJ0411	-	-
C		RMJ	-	RMJ0611/RMJ1211	-

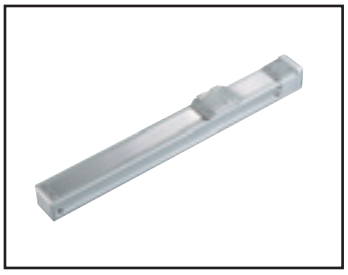

Electric actuator Ball screw drive Slider Low dust specification

ECS-05 Series

Straight motor mounting

● Stepper motor size: □42

How to order

ECS - 05 - 05 040 - E A A N C B N P - M

Ⓐ Ⓑ Ⓒ Ⓓ Ⓔ Ⓕ Ⓖ Ⓗ Ⓘ Ⓙ Ⓚ Ⓛ

Ⓐ Body size

05	Body width 51 mm

Ⓑ Screw lead

02	2 mm
05	5 mm
10	10 mm

Ⓒ Stroke length

005 to 080	50 mm (In 50 mm increments) 800 mm

Ⓓ Motor mounting direction

E	Straight mounting

Ⓔ Mounted motor specification

A	Select the mounted motor specification from the table below.
B	

Ⓕ Motor size

A	□42

Ⓖ Brake

N	None

Ⓗ Origin sensor (1 pc) *1*2

N	None
C	Outside motor side
D	Outside motor opposite side

Ⓘ Limit sensor (2 pcs) *1*2

N	None
B	Outside

Ⓙ Grease nipple *3

N	None (Body mounting direction: Standard)

Ⓚ Positioning pin hole

N	None
P	Yes

Ⓛ Magnet slider method

M	Yes

Manufacturer	□42
Oriental Motor Co., Ltd.	A
MinebeaMitsumi Inc.	B
Dyadic Systems Co., Ltd.	B

*Refer to page 641 for the motor model No.

*1: Origin sensor and limit sensor are available as a set. As it is both-or-nothing, select "None" for both.
*2: The user can adjust the sensor position. (Included at shipment)
*3: "Body mounting direction: Standard" here refers to mounting from the bottom side.

Specifications

Applicable motor sizes		□42 Stepper motor		
Drive method		Ball screw ø12		
Ball screw accuracy grade		C7		
Stroke length	mm	50 to 800		
Screw lead	mm	2	5	10
Max. load capacity *1	Horizontal kg	10	10	5
	Vertical kg	7	3	1.5
Max. speed	mm/s	100	250	500
Rated thrust *1	N	825	330	165
Repeatability	mm	±0.01		
Lost motion	mm	0.1 or less		
Drive system weight	kg	0.3		
Other inertia	kg·cm²	0.024		
Coefficient of friction		0.05		
Mechanical efficiency		0.8		
Ball screw length		Stroke + 200		
Dynamic allowable load	N	551		
Static allowable moment	N·m	MP: 20, MY: 16, MR: 19		
Dynamic allowable moment	N·m	MP: 2.8, MY: 2.8, MR: 6.8		
Operating ambient temperature, humidity		0 to 40°C (no freezing) 35 to 80% RH (no condensation)		
Storage ambient temperature, humidity		-10 to 50°C (no freezing) 35 to 80% RH (no condensation)		
Atmosphere		No corrosive gas, explosive gas, or dust		

*1 The rated thrust and max. load capacity values are the allowable values for the actuator body; the actual thrust and load capacity are limited by the motor used.

Stroke and max. speed

(mm)

Stroke length / Screw lead	100 to 600	650	700	750	800
2	100	90	80	70	60
5	250	225	200	175	150
10	500	450	400	350	300

*The max. speed is the speed when the motor mounted by the customer can output a rotation speed of 3000 rpm.
The max. speed is restricted by the stroke. Do not move at speeds beyond the limit.

Allowable overhang length

*Refer to page 674 for details.

Moment direction

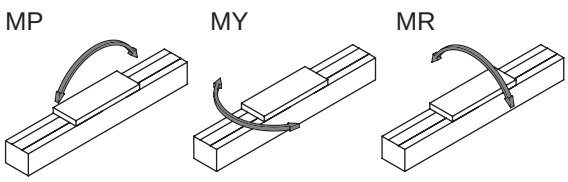

Dimensions Straight motor mounting

● ECS-05-*****-E

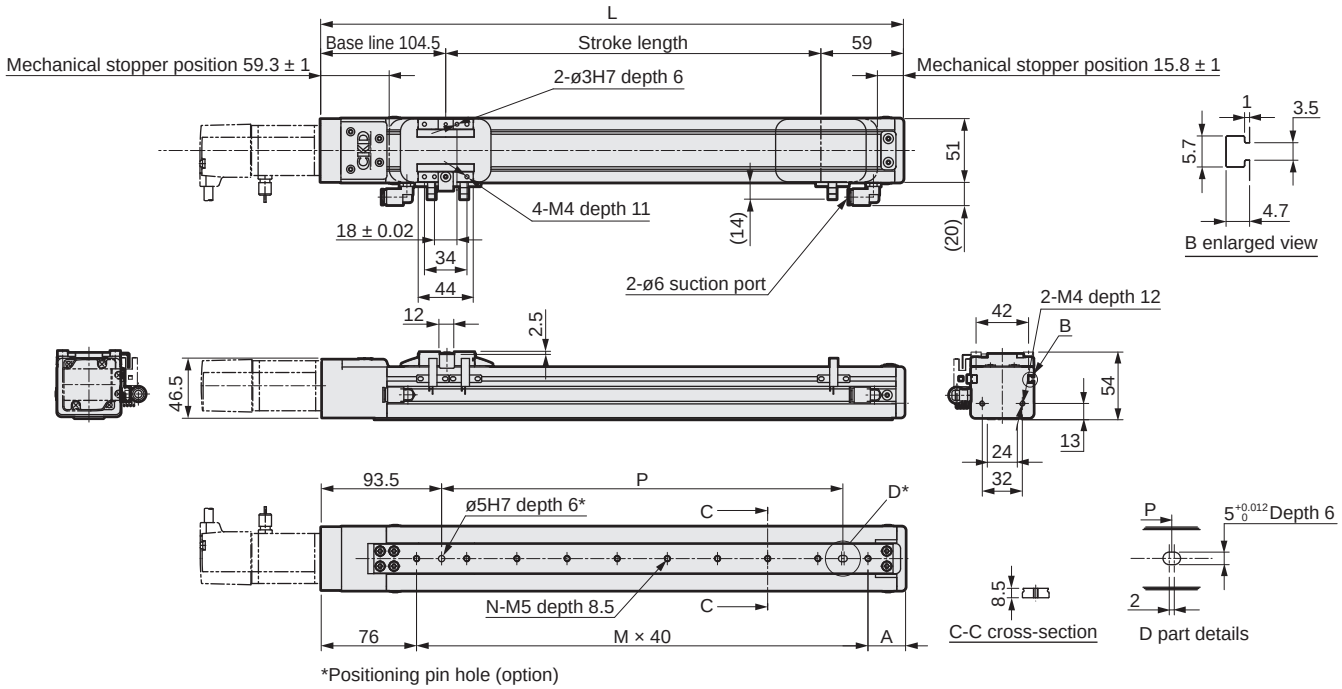

Stroke length (mm)	50	100	150	200	250	300	350	400	450	500	550	600	650	700	750	800
L	213.5	263.5	313.5	363.5	413.5	463.5	513.5	563.5	613.5	663.5	713.5	763.5	813.5	863.5	913.5	963.5
A	60	30	40	50	60	30	40	50	60	30	40	50	60	30	40	50
M	2	4	5	6	7	9	10	11	12	14	15	16	17	19	20	21
N	3	5	6	7	8	10	11	12	13	15	16	17	18	20	21	22
P	40	120	160	200	240	320	360	400	440	520	560	600	640	720	760	800
Weight (kg)	1.5	1.7	1.9	2.0	2.2	2.3	2.5	2.6	2.8	2.9	3.1	3.2	3.4	3.5	3.6	3.8

Motor mounting part

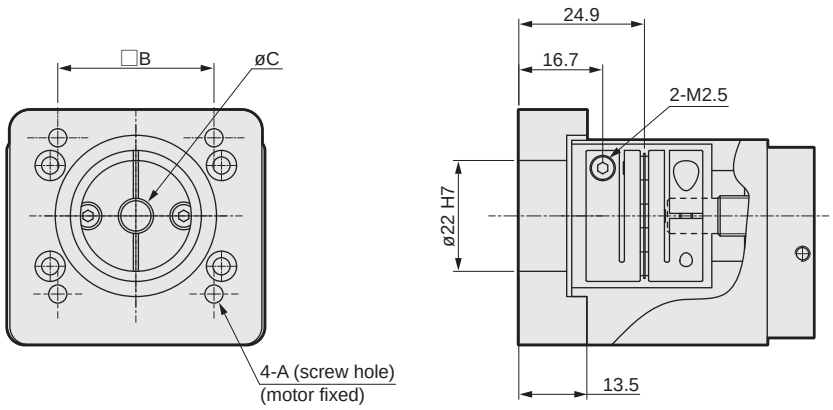

Mounted motor specification	A	B	C	Motor mounting bolt
A	3.6	31	6	4-M3 × L16
B	3.6	31	5	4-M3 × L16

List of attachments

[Motor mounting parts]

Mounted motor specification	Coupling	Fitting	Motor size	Motor mounting bolt	
				Size	Quantity
A	Assembled at shipment	Assembled at shipment	□42	M3	4
B				M3	4

*Refer to page 682 for fitting details.

[Origin sensor/Limit sensor]

Manufacturer	Model	Quantity
OMRON Corporation	EE-SX672	3

*Refer to page 678 for sensor specifications.



Electric actuator Ball screw drive Slider Low dust specification

ECS-05 Series

Motor side mounting (left, right, bottom)

● Stepper motor size: □42

How to order

ECS - 05 (A) - 05 (B) 040 (C) - R (D) A (E) A (F) N (G) C (H) B (I) N (J) P (K) - M (L)

(A) Body size

05	Body width 51 mm

(B) Screw lead

02	2 mm
05	5 mm
10	10 mm

(C) Stroke length

005 to 080	50 mm (In 50 mm increments) 800 mm

(D) Motor mounting direction

R	Right mounting
D	Bottom mounting
L	Left mounting

(E) Mounted motor specification

A	Select the mounted motor specification from the table below.
B	

(F) Motor size

A	□42

(G) Brake

N	None

(H) Origin sensor (1 pc) *1*2

N	None
C	Outside motor side
D	Outside motor opposite side

(I) Limit sensor (2 pcs) *1*2

N	None
B	Outside

(J) Grease nipple *3

N	None (Body mounting direction: Standard)

(K) Positioning pin hole

N	None
P	Yes

(L) Magnet slider method

M	Yes

Manufacturer	□42
Oriental Motor Co., Ltd.	A
MinebeaMitsumi Inc.	B
Dyadic Systems Co., Ltd.	B

*Refer to page 641 for the motor model No.

*1: Origin sensor and limit sensor are available as a set. As it is both-or-nothing, select "None" for both.
*2: The user can adjust the sensor position. (Included at shipment)
*3: "Body mounting direction: Standard" here refers to mounting from the bottom side.

Specifications

Applicable motor sizes		□42 Stepper motor		
Drive method		Ball screw ø12		
Ball screw accuracy grade		C7		
Stroke length	mm	50 to 800		
Screw lead	mm	2	5	10
Max. load capacity *1	Horizontal kg	10	10	5
	Vertical kg	7	3	1.5
Max. speed	mm/s	100	250	500
Rated thrust *1	N	825	330	165
Repeatability	mm	±0.01		
Lost motion	mm	0.1 or less		
Drive system weight	kg	0.3		
Other inertia	kg·cm²	0.120		
Coefficient of friction		0.05		
Mechanical efficiency		0.8		
Ball screw length		Stroke + 200		
Dynamic allowable load	N	551		
Static allowable moment	N·m	MP: 20, MY: 16, MR: 19		
Dynamic allowable moment	N·m	MP: 2.8, MY: 2.8, MR: 6.8		
Operating ambient temperature, humidity		0 to 40°C (no freezing) 35 to 80% RH (no condensation)		
Storage ambient temperature, humidity		-10 to 50°C (no freezing) 35 to 80% RH (no condensation)		
Atmosphere		No corrosive gas, explosive gas, or dust		

*1 The rated thrust and max. load capacity values are the allowable values for the actuator body; the actual thrust and load capacity are limited by the motor used.

Stroke and max. speed

(mm/s)

Screw lead \ Stroke length	100 to 600	650	700	750	800
2	100	90	80	70	60
5	250	225	200	175	150
10	500	450	400	350	300

*The max. speed is the speed when the motor mounted by the customer can output a rotation speed of 3000 rpm.
The max. speed is restricted by the stroke. Do not move at speeds beyond the limit.

Allowable overhang length

*Refer to page 674 for details.

Moment direction

MP MY MR

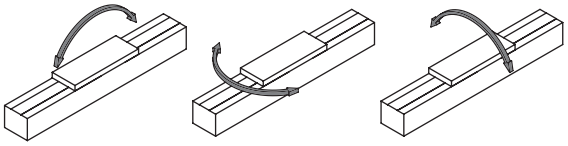

Dimensions Motor right-side mounting

● ECS-05-*****-R

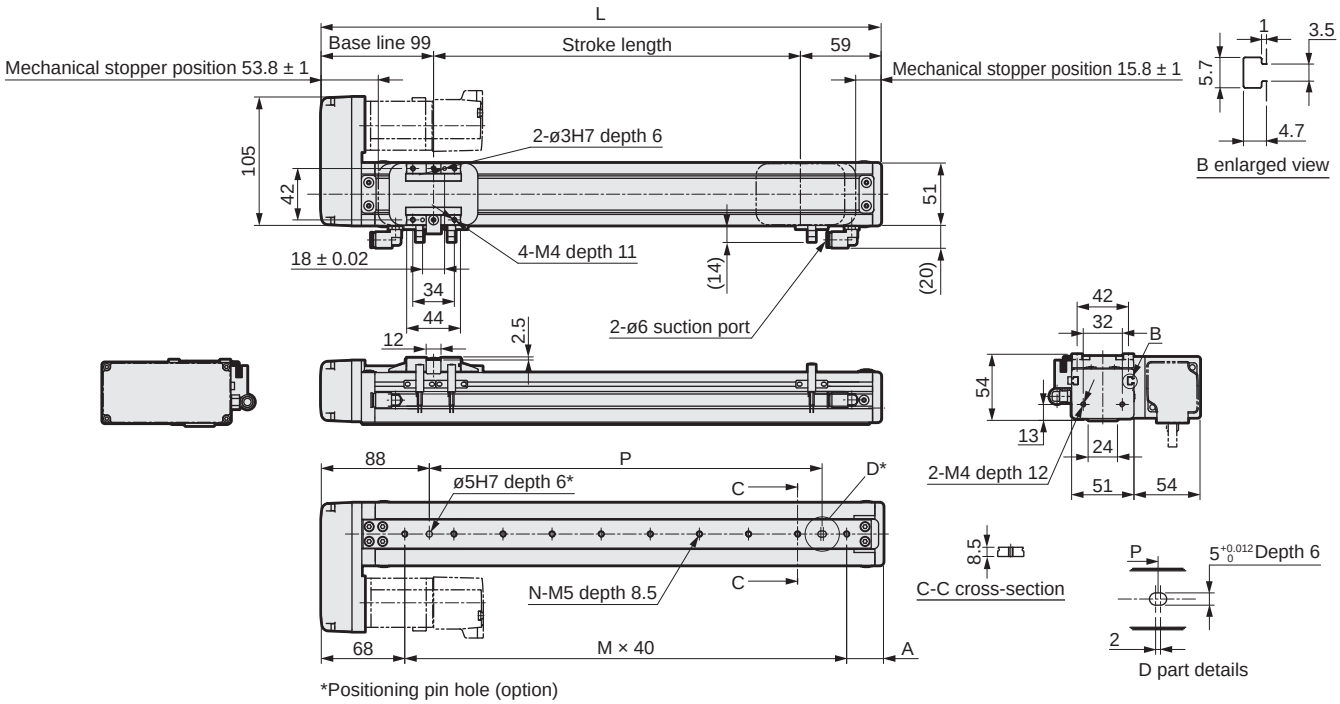

Stroke length (mm)	50	100	150	200	250	300	350	400	450	500	550	600	650	700	750	800
L	208	258	308	358	408	458	508	558	608	658	708	758	808	858	908	958
A	60	30	40	50	60	30	40	50	60	30	40	50	60	30	40	50
M	2	4	5	6	7	9	10	11	12	14	15	16	17	19	20	21
N	3	5	6	7	8	10	11	12	13	15	16	17	18	20	21	22
P	40	120	160	200	240	320	360	400	440	520	560	600	640	720	760	800
Weight (kg)	1.7	1.9	2.0	2.1	2.3	2.4	2.6	2.7	2.9	3.0	3.2	3.3	3.5	3.6	3.7	3.9

Motor mounting part

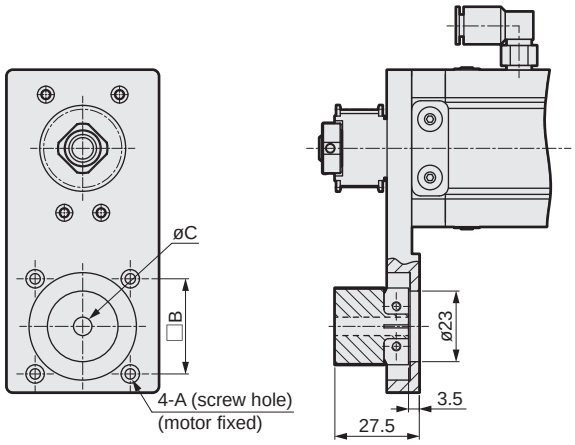

Mounted motor specification	A	B	C	Motor mounting bolt
A	3.4	31	6	4-M3 × L14
B	3.4	31	5	4-M3 × L14

List of attachments

[Motor mounting parts]

Mounted motor specification	Timing belt, pulley	Fitting	Motor size	Motor mounting bolt	
				Size	Quantity
A	Included at shipment	Assembled at shipment	□42	M3	4
B				M3	4

*Refer to page 682 for fitting details.

[Origin sensor/Limit sensor]

Manufacturer	Model	Quantity
OMRON Corporation	EE-SX672	3

*Refer to page 678 for sensor specifications.

Dimensions Motor bottom mounting

● ECS-05-*****-D

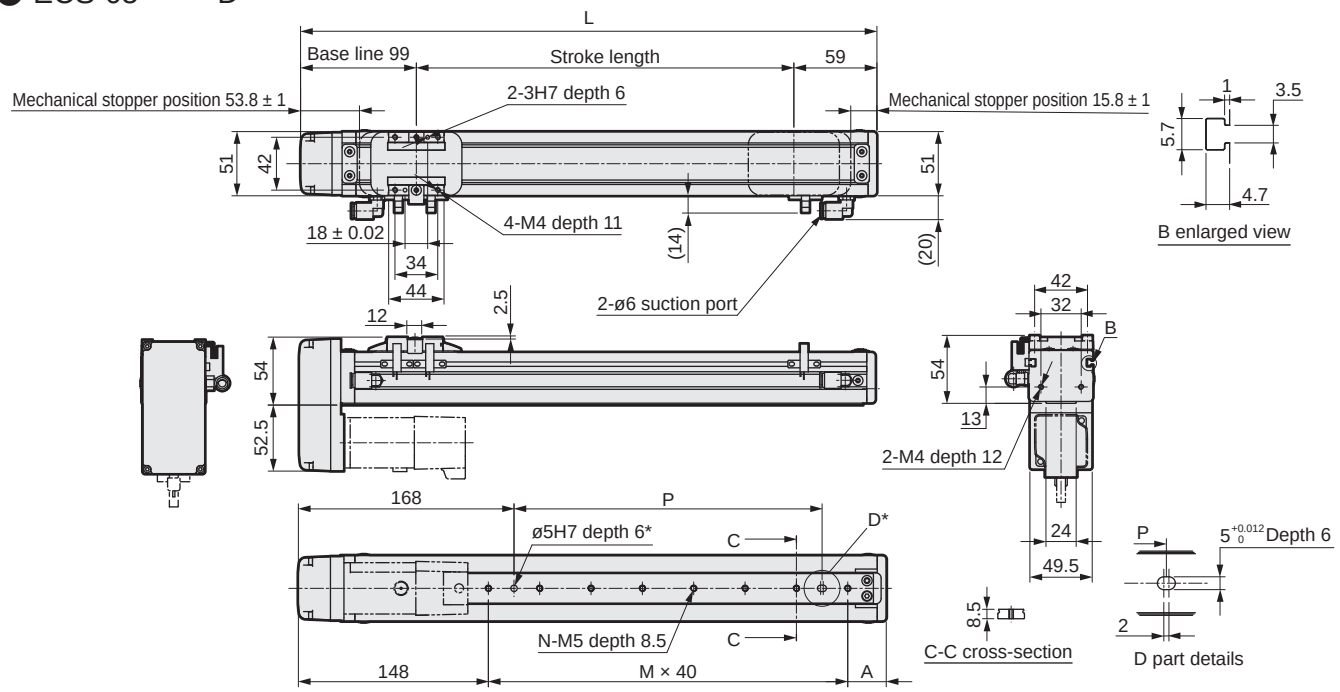

*Positioning pin hole (option)

Stroke length (mm)	50	100	150	200	250	300	350	400	450	500	550	600	650	700	750	800
L	208	258	308	358	408	458	508	558	608	658	708	758	808	858	908	958
A	60	30	40	50	60	30	40	50	60	30	40	50	60	30	40	50
M	0	2	3	4	5	7	8	9	10	12	13	14	15	17	18	19
N	1	3	4	5	6	8	9	10	11	13	14	15	16	18	19	20
P	0	40	80	120	160	240	280	320	360	440	480	520	560	640	680	720
Weight (kg)	1.7	1.9	2.0	2.1	2.3	2.4	2.6	2.7	2.9	3.0	3.2	3.3	3.5	3.6	3.7	3.9

Motor mounting part

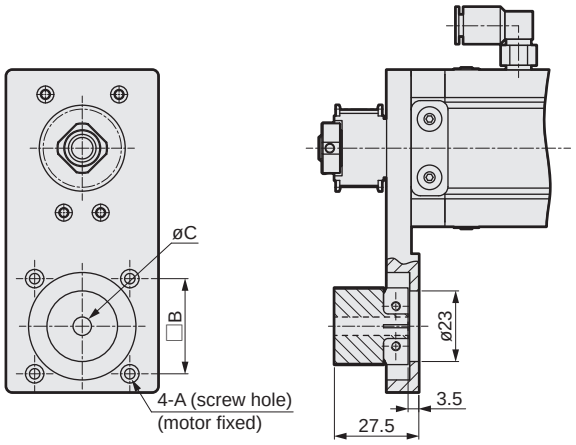

Mounted motor specification	A	B	C	Motor mounting bolt
A	3.4	31	6	4-M3 × L14
B	3.4	31	5	4-M3 × L14

List of attachments

[Motor mounting parts]

Mounted motor specification	Timing belt, pulley	Fitting	Motor size	Motor mounting bolt	
				Size	Quantity
A	Included at shipment	Assembled at shipment	□42	M3	4
B				M3	4

*Refer to page 682 for fitting details.

[Origin sensor/Limit sensor]

Manufacturer	Model	Quantity
OMRON Corporation	EE-SX672	3

*Refer to page 678 for sensor specifications.

Dimensions Motor left-side mounting

● ECS-05-*****-L

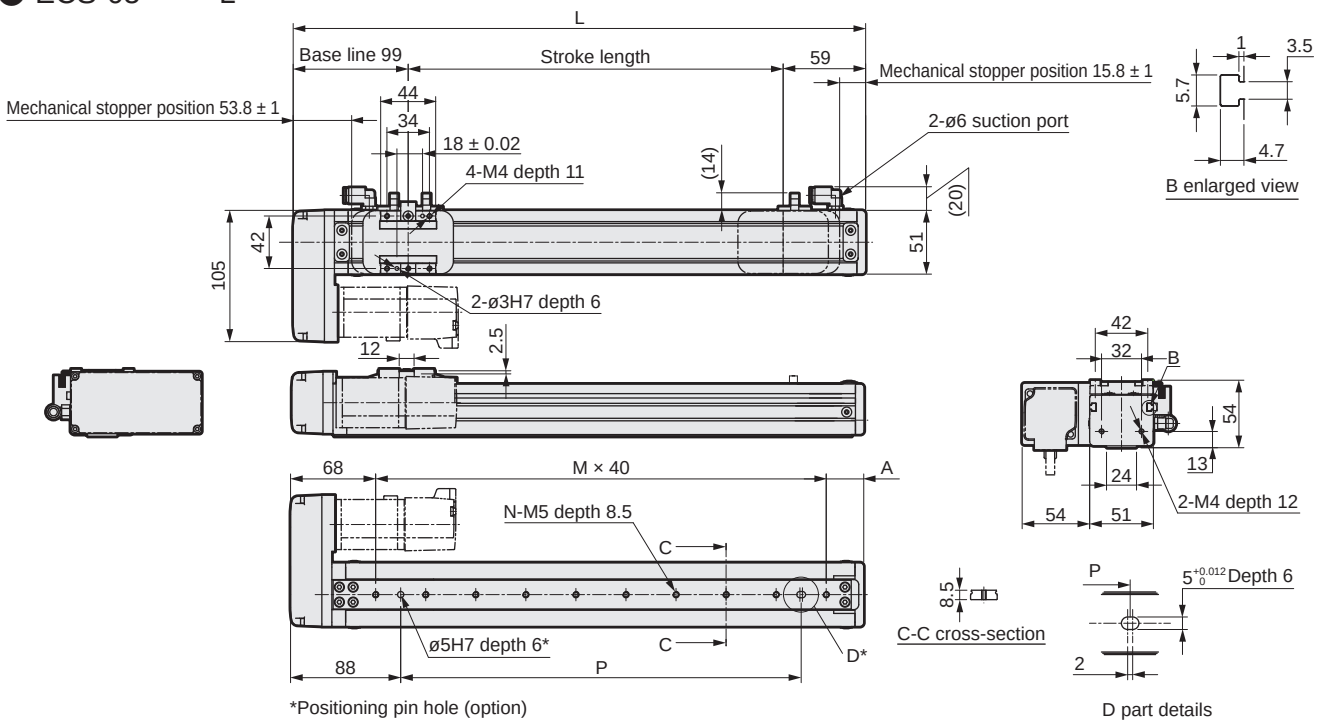

*Positioning pin hole (option)

Stroke length (mm)	50	100	150	200	250	300	350	400	450	500	550	600	650	700	750	800
L	208	258	308	358	408	458	508	558	608	658	708	758	808	858	908	958
A	60	30	40	50	60	30	40	50	60	30	40	50	60	30	40	50
M	2	4	5	6	7	9	10	11	12	14	15	16	17	19	20	21
N	3	5	6	7	8	10	11	12	13	15	16	17	18	20	21	22
P	40	120	160	200	240	320	360	400	440	520	560	600	640	720	760	800
Weight (kg)	1.7	1.9	2.0	2.1	2.3	2.4	2.6	2.7	2.9	3.0	3.2	3.3	3.5	3.6	3.7	3.9

Motor mounting part

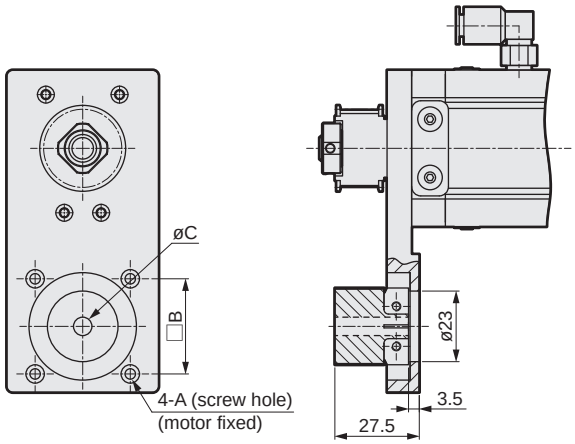

Mounted motor specification	A	B	C	Motor mounting bolt
A	3.4	31	6	4-M3 × L14
B	3.4	31	5	4-M3 × L14

List of attachments

[Motor mounting parts]

Mounted motor specification	Timing belt, pulley	Fitting	Motor size	Motor mounting bolt	
				Size	Quantity
A	Included at shipment	Assembled at shipment	□42	M3	4
B				M3	4

*Refer to page 682 for fitting details.

[Origin sensor/Limit sensor]

Manufacturer	Model	Quantity
OMRON Corporation	EE-SX672	3

*Refer to page 678 for sensor specifications.

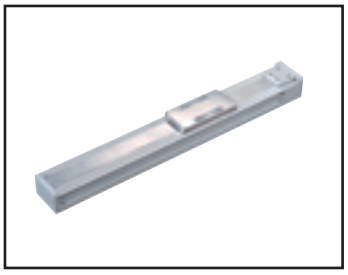

Electric actuator Ball screw drive Slider Low dust specification

ECS-06 Series

Straight motor mounting

● Stepper motor size: □42

How to order

ECS - 06 - 05 - 040 - E A A N C B N P - M

Ⓐ Body size

06	Body width 65 mm

Ⓑ Screw lead

02	2 mm
05	5 mm
10	10 mm

Ⓒ Stroke length

005 to 080	50 mm (In 50 mm increments) 800 mm

Ⓓ Motor mounting direction

E	Straight mounting

Ⓔ Mounted motor specification

A	Select the mounted motor specification from the table below.
B	

Ⓕ Motor size

A	□42

Ⓖ Brake

N	None

Ⓗ Origin sensor (1 pc) *1*2

N	None
C	Outside motor side
D	Outside motor opposite side

Ⓘ Limit sensor (2 pcs) *1*2

N	None
B	Outside

Ⓙ Grease nipple *3

N	None (Body mounting direction: Standard)

Ⓚ Positioning pin hole

N	None
P	Yes

Ⓛ Magnet slider method

M	Yes

Manufacturer	□42
Oriental Motor Co., Ltd.	A
MinebeaMitsumi Inc.	B
Dyadic Systems Co., Ltd.	B

*Refer to page 641 for the motor model No.

*1: Origin sensor and limit sensor are available as a set. As it is both-or-nothing, select "None" for both.
*2: The user can adjust the sensor position. (Included at shipment)
*3: "Body mounting direction: Standard" here refers to mounting from the bottom side.

Specifications

Applicable motor sizes		□42 Stepper		
Drive method		Ball screw ø12		
Ball screw accuracy grade		C7		
Stroke length	mm	50 to 800		
Screw lead	mm	2	5	10
Max. load capacity *1	Horizontal kg	30	30	15
	Vertical kg	15	10	5
Max. speed	mm/s	100	250	500
Rated thrust *1	N	854	341	170
Max. speed	mm/s	100	250	500
Repeatability	mm	±0.01		
Lost motion	mm	0.1 or less		
Drive system weight	kg	0.5		
Other inertia	kg·cm²	0.024		
Coefficient of friction		0.05		
Mechanical efficiency		0.8		
Ball screw length		Stroke + 200		
Dynamic allowable load	N	1209		
Static allowable moment	N·m	MP: 80, MY: 70, MR: 75		
Dynamic allowable moment	N·m	MP: 8.9, MY: 8.9, MR: 24.8		
Operating ambient temperature, humidity		0 to 40°C (no freezing) 35 to 80% RH (no condensation)		
Storage ambient temperature, humidity		-10 to 50°C (no freezing) 35 to 80% RH (no condensation)		
Atmosphere		No corrosive gas, explosive gas, or dust		

*1 The rated thrust and max. load capacity values are the allowable values for the actuator body; the actual thrust and load capacity are limited by the motor used.

Stroke and max. speed

(mm/s)

Screw lead \ Stroke length	100 to 600	650	700	750	800
2	100	90	80	70	60
5	250	225	200	175	150
10	500	450	400	350	300

*The max. speed is the speed when the motor mounted by the customer can output a rotation speed of 3000 rpm.
The max. speed is restricted by the stroke. Do not move at speeds beyond the limit.

Allowable overhang length

*Refer to page 674 for details.

Moment direction

MP

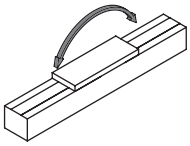

MY

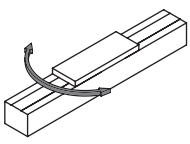

MR

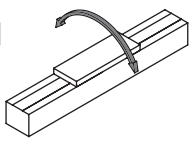

Dimensions Straight motor mounting

● ECS-06-*****-E

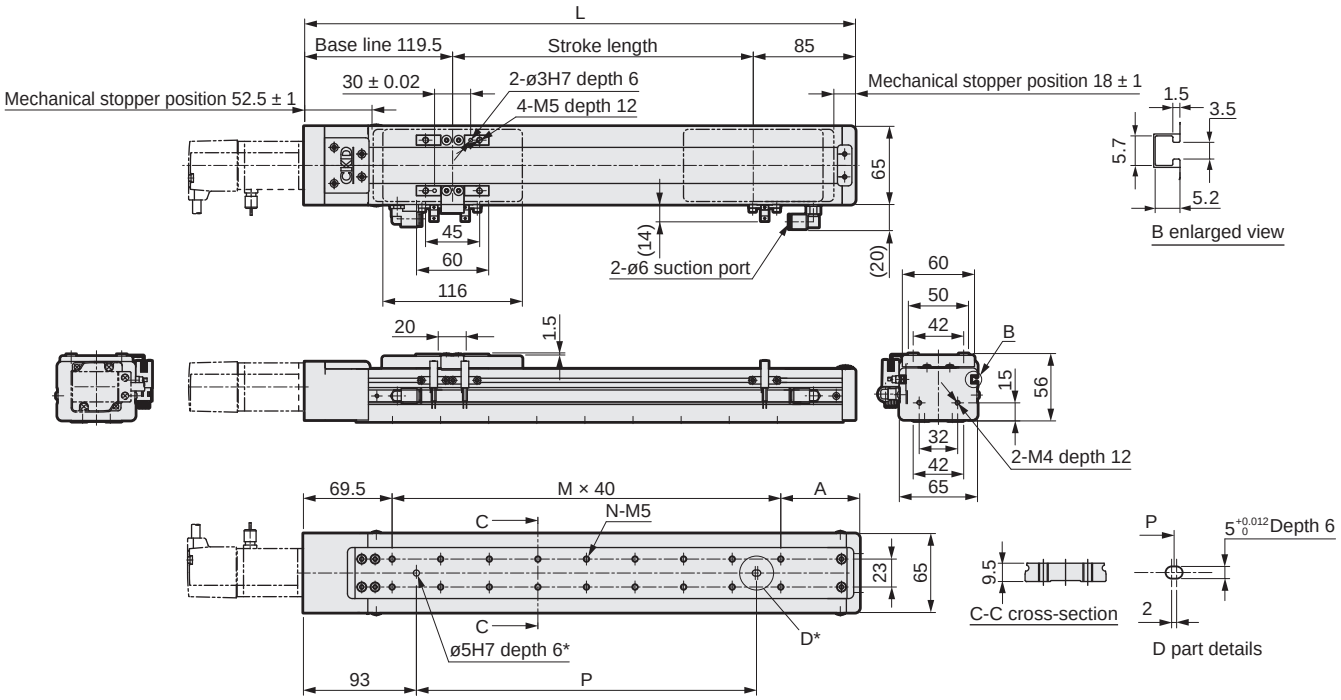

*Positioning pin hole (option)

Stroke length (mm)	50	100	150	200	250	300	350	400	450	500	550	600	650	700	750	800
L	254.5	304.5	354.5	404.5	454.5	504.5	554.5	604.5	654.5	704.5	754.5	804.5	854.5	904.5	954.5	1004.5
A	65	35	45	55	65	35	45	55	65	35	45	55	65	35	45	55
M	3	5	6	7	8	10	11	12	13	15	16	17	18	20	21	22
N	8	12	14	16	18	22	24	26	28	32	34	36	38	42	44	46
P	80	160	200	240	280	360	400	440	480	560	600	640	680	760	800	840
Weight (kg)	2.9	2.9	3.1	3.3	3.5	3.8	4.0	4.2	4.4	4.7	4.9	5.1	5.3	5.6	5.8	6.0

Motor mounting part

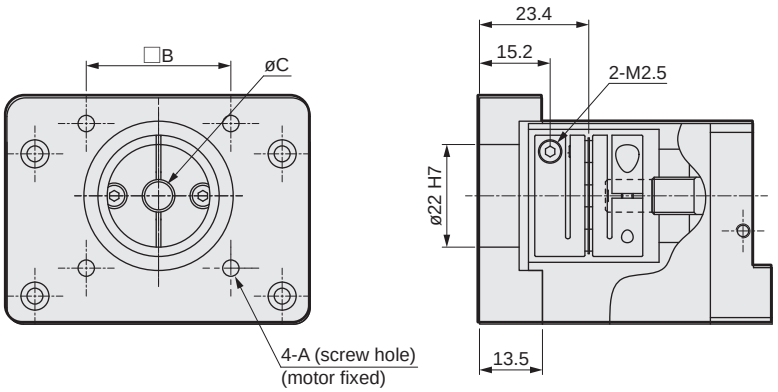

Mounted motor specification	A	B	C	Motor mounting bolt
A	3.5	31	6	4-M3 × L16
B	3.5	31	5	4-M3 × L16

List of attachments

[Motor mounting parts]

Mounted motor specification	Coupling	Fitting	Motor size	Motor mounting bolt	
				Size	Quantity
A	Assembled at shipment	Assembled at shipment	□42	M3	4
B				M3	4

*Refer to page 682 for fitting details.

[Origin sensor/Limit sensor]

Manufacturer	Model	Quantity
OMRON Corporation	EE-SX672	3

*Refer to page 678 for sensor specifications.



Electric actuator Ball screw drive Slider Low dust specification

ECS-06 Series

Motor side mounting (left, right, bottom)

● Stepper motor size: □42

How to order

ECS - 06 - 05 - 040 - R A A N C B N P - M

(A) (B) (C) (D) (E) (F) (G) (H) (I) (J) (K) (L)

(A) Body size

06	Body width 65 mm

(B) Screw lead

02	2 mm
05	5 mm
10	10 mm

(C) Stroke length

005 to 080	50 mm (In 50 mm increments) 800 mm

(D) Motor mounting direction

R	Right mounting
D	Bottom mounting
L	Left mounting

(E) Mounted motor specification

A	Select the mounted motor specification from the table below.
B	

(F) Motor size

A	□42

(G) Brake

N	None

(H) Origin sensor (1 pc) *1 *2

N	None
C	Outside motor side
D	Outside motor opposite side

(I) Limit sensor (2 pcs) *1 *2

N	None
B	Outside

(J) Grease nipple *3

N	None (Body mounting direction: Standard)

(K) Positioning pin hole

N	None
P	Yes

(L) Magnet slider method

M	Yes

Manufacturer	□42
Oriental Motor Co., Ltd.	A
MinebeaMitsumi Inc.	B
Dyadic Systems Co., Ltd.	B

*Refer to page 641 for the motor model No.

*1: Origin sensor and limit sensor are available as a set. As it is both-or-nothing, select "None" for both.
*2: The user can adjust the sensor position. (Included at shipment)
*3: "Body mounting direction: Standard" here refers to mounting from the bottom side.

Specifications

Applicable motor sizes		□42 Stepper motor		
Drive method		Ball screw ø12		
Ball screw accuracy grade		C7		
Stroke length	mm	50 to 800		
Screw lead	mm	2	5	10
Max. load capacity *1	Horizontal kg	30	30	15
	Vertical kg	15	10	5
Max. speed	mm/s	100	250	500
Rated thrust *1	N	854	341	170
Max. speed	mm/s	100	250	500
Repeatability	mm	±0.01		
Lost motion	mm	0.1 or less		
Drive system weight	kg	0.5		
Other inertia	kg·cm²	0.120		
Coefficient of friction		0.05		
Mechanical efficiency		0.8		
Ball screw length		Stroke + 200		
Dynamic allowable load	N	1209		
Static allowable moment	N·m	MP: 80, MY: 70, MR: 75		
Dynamic allowable moment	N·m	MP: 8.9, MY: 8.9, MR: 24.8		
Operating ambient temperature, humidity		0 to 40°C (no freezing) 35 to 80% RH (no condensation)		
Storage ambient temperature, humidity		-10 to 50°C (no freezing) 35 to 80% RH (no condensation)		
Atmosphere		No corrosive gas, explosive gas, or dust		

*1 The rated thrust and max. load capacity values are the allowable values for the actuator body; the actual thrust and load capacity are limited by the motor used.

Stroke and max. speed

(mm/s)

Screw lead \ Stroke length	100 to 600	650	700	750	800
2	100	90	80	70	60
5	250	225	200	175	150
10	500	450	400	350	300

*The max. speed is the speed when the motor mounted by the customer can output a rotation speed of 3000 rpm.
The max. speed is restricted by the stroke. Do not move at speeds beyond the limit.

Allowable overhang length

*Refer to page 674 for details.

Moment direction

MP MY MR

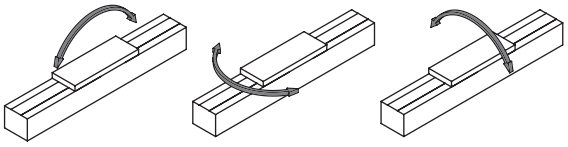

Dimensions Motor right-side mounting

● ECS-06-*****-R

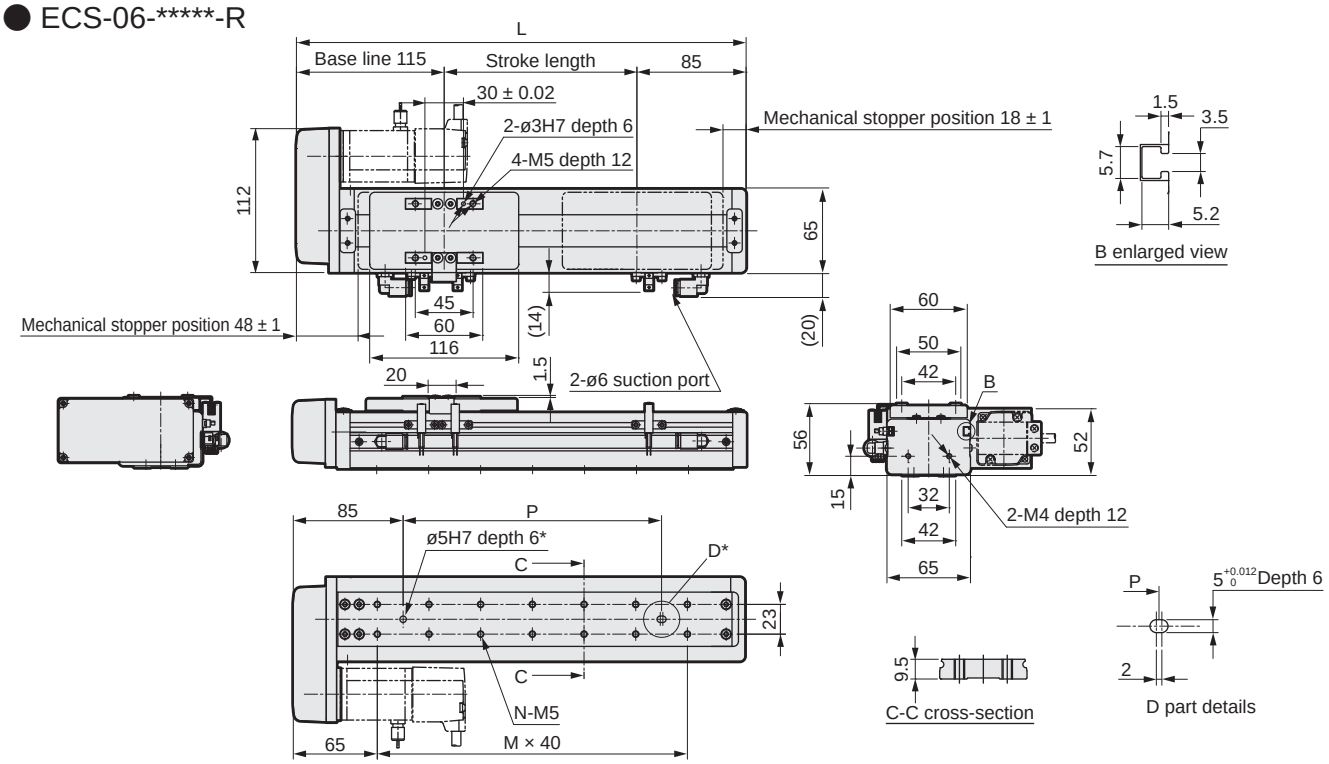

*Positioning pin hole (option)

Stroke length (mm)	50	100	150	200	250	300	350	400	450	500	550	600	650	700	750	800
L	250	300	350	400	450	500	550	600	650	700	750	800	850	900	950	1000
A	65	35	45	55	65	35	45	55	65	35	45	55	65	35	45	55
M	3	5	6	7	8	10	11	12	13	15	16	17	18	20	21	22
N	8	12	14	16	18	22	24	26	28	32	34	36	38	42	44	46
P	80	160	200	240	280	360	400	440	480	560	600	640	680	760	800	840
Weight (kg)	2.4	2.9	3.1	3.4	3.6	3.8	4.0	4.3	4.5	4.7	4.9	5.2	5.4	5.6	5.8	6.0

Motor mounting part

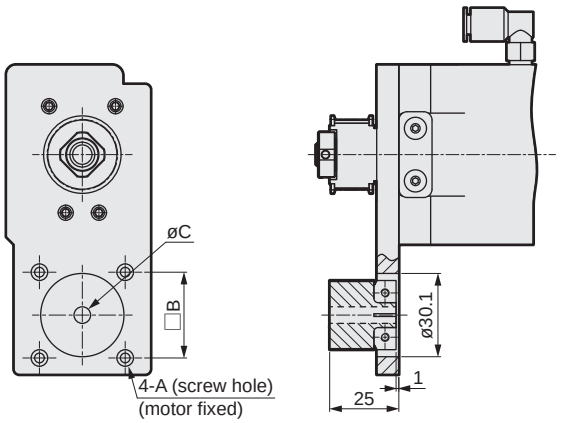

Mounted motor specification	A	B	C	Motor mounting bolt
A	3.5	31	6	4-M3 × L12
B	3.5	31	5	4-M3 × L12

List of attachments

[Motor mounting parts]

Mounted motor specification	Timing belt, pulley	Fitting	Motor size	Motor mounting bolt	
				Size	Quantity
A	Included at shipment	Assembled at shipment	□42	M3	4
B				M3	4

*Refer to page 682 for fitting details.

[Origin sensor/Limit sensor]

Manufacturer	Model	Quantity
OMRON Corporation	EE-SX672	3

*Refer to page 678 for sensor specifications.

Dimensions Motor bottom mounting

● ECS-06-*****-D

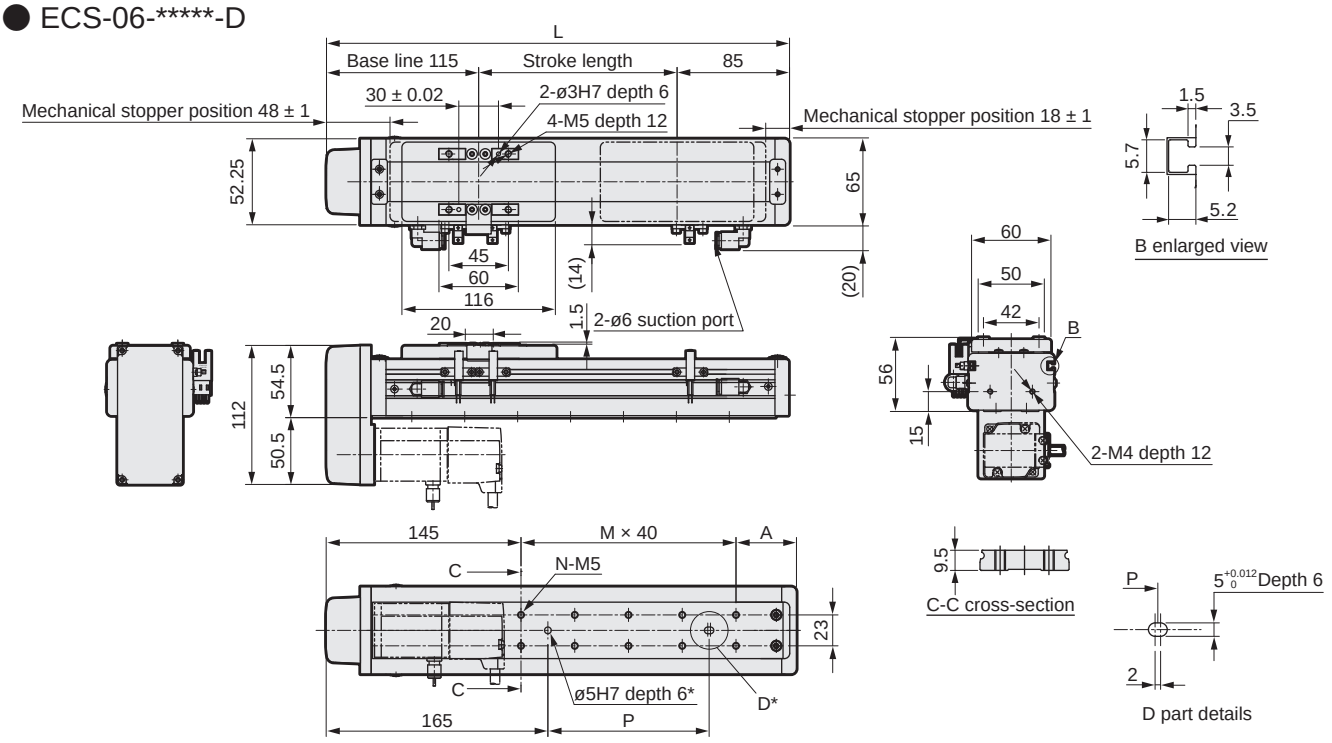

*Positioning pin hole (option)

Stroke length (mm)	50	100	150	200	250	300	350	400	450	500	550	600	650	700	750	800
L	250	300	350	400	450	500	550	600	650	700	750	800	850	900	950	1000
A	65	35	45	55	65	35	45	55	65	35	45	55	65	35	45	55
M	1	3	4	5	6	8	9	10	11	13	14	15	16	18	19	20
N	4	8	10	12	14	18	20	22	24	28	30	32	34	38	40	42
P	0	80	120	160	200	280	320	360	400	480	520	560	600	680	720	760
Weight (kg)	2.4	2.9	3.1	3.4	3.6	3.8	4.0	4.3	4.5	4.7	5.0	5.2	5.4	5.6	5.8	6.0

Motor mounting part

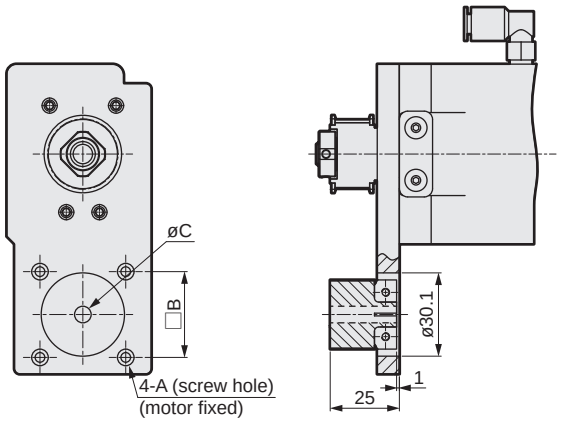

Mounted motor specification	A	B	C	Motor mounting bolt
A	3.5	31	6	4-M3 × L12
B	3.5	31	5	4-M3 × L12

List of attachments

[Motor mounting parts]

Mounted motor specification	Timing belt, pulley	Fitting	Motor size	Motor mounting bolt	
				Size	Quantity
A	Included at shipment	Assembled at shipment	□42	M3	4
B				M3	4

*Refer to page 682 for fitting details.

[Origin sensor/Limit sensor]

Manufacturer	Model	Quantity
OMRON Corporation	EE-SX672	3

*Refer to page 678 for sensor specifications.

Dimensions Motor left-side mounting

● ECS-06-*****-L

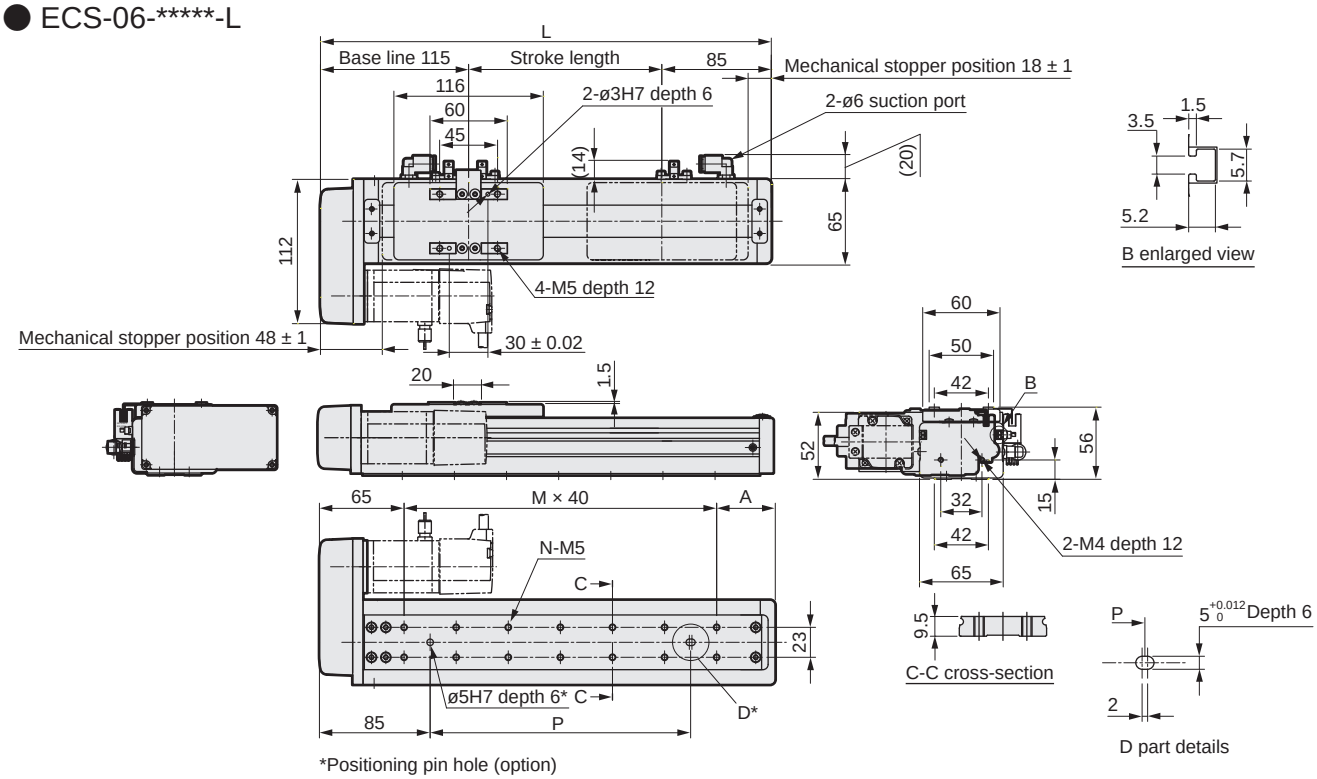

*Positioning pin hole (option)

Stroke length (mm)	50	100	150	200	250	300	350	400	450	500	550	600	650	700	750	800
L	250	300	350	400	450	500	550	600	650	700	750	800	850	900	950	1000
A	65	35	45	55	65	35	45	55	65	35	45	55	65	35	45	55
M	3	5	6	7	8	10	11	12	13	15	16	17	18	20	21	22
N	8	12	14	16	18	22	24	26	28	32	34	36	38	42	44	46
P	80	160	200	240	280	360	400	440	480	560	600	640	680	760	800	840
Weight (kg)	2.4	2.9	3.1	3.4	3.6	3.8	4.0	4.3	4.5	4.7	4.9	5.2	5.4	5.6	5.8	6.0

Motor mounting part

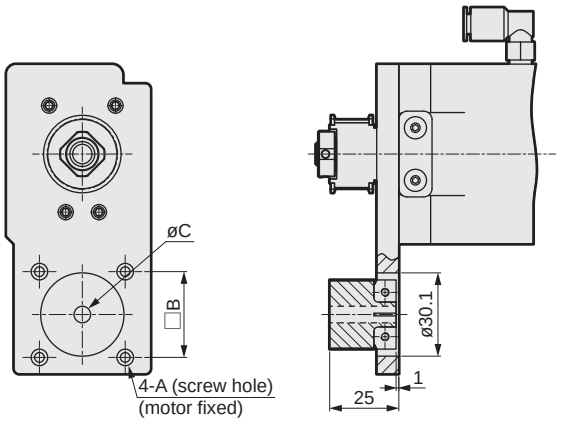

Mounted motor specification	A	B	C	Motor mounting bolt
A	3.5	31	6	4-M3 × L12
B	3.5	31	5	4-M3 × L12

List of attachments

[Motor mounting parts]

Mounted motor specification	Timing belt, pulley	Fitting	Motor size	Motor mounting bolt	
				Size	Quantity
A	Included at shipment	Assembled at shipment	□42	M3	4
B				M3	4

*Refer to page 682 for fitting details.

[Origin sensor/Limit sensor]

Manufacturer	Model	Quantity
OMRON Corporation	EE-SX672	3

*Refer to page 678 for sensor specifications.

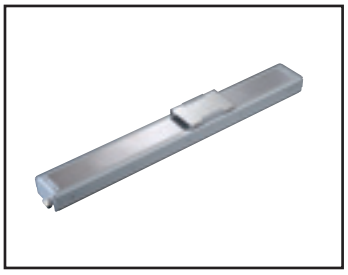

Electric actuator Ball screw drive Slider Low dust specification

ECS-10 Series

Straight motor mounting

● Stepper motor size: □56, □60

How to order

ECS - 10 - 05 040 - E A B N C B N P

Ⓐ Body size

10	Body width 102 mm

Ⓑ Screw lead

05	5 mm
10	10 mm
16	16 mm
20	20 mm

Ⓒ Stroke length

005 to 105	50 mm (In 50 mm increments) 1050 mm

Ⓓ Motor mounting direction

E	Straight mounting

Ⓔ Mounted motor specification

A	Select the mounted motor specification from the table below.
B	
C	

Ⓕ Motor size

B	□56
C	□60

Ⓖ Brake

N	None

Ⓗ Origin sensor (1 pc) *1 *2 *3 *4 *5

N	None
A	Inside motor side
B	Inside motor opposite side
C	Outside motor side
D	Outside motor opposite side

Ⓘ Limit sensor (2 pcs) *1 *2 *3 *4 *5

N	None
A	Inside
B	Outside

Ⓙ Grease nipple *4 *5 *6

N	None (Body mounting direction: Standard)
R	Right
L	Counterclockwise

Ⓚ Positioning pin hole

N	None
P	Yes

*1: Origin sensor and limit sensor are available as a set. As it is both-or-nothing, select "None" for both.
*2: Origin sensor B and limit sensor A cannot be combined.
*3: For sensor inside mounting, the user cannot adjust the position. (Assembled at shipment)
For sensor outside mounting, the user can adjust the position. (Included at shipment)
*4: Contact CKD to use the origin sensor, limit sensor and grease nipple in the same direction.
*5: "Body mounting direction: Standard" here refers to mounting from the bottom side.
*6: For sensor interior mounting, select "None" for the grease nipple.

Manufacturer	□56	□60
Oriental Motor Co., Ltd.	-	A
MinebeaMitsumi Inc.	B	-
Dyadic Systems Co., Ltd.	C	-

*Refer to page 641 for the motor model No.

Specifications

Applicable motor sizes		□56, □60 stepper motor			
Drive method		Ball screw ø16			
Ball screw accuracy grade		C7			
Stroke length	mm	50 to 1050			
Screw lead	mm	5	10	16	20
Max. load capacity *1	Horizontal kg	50	30	22	18
	Vertical kg	12	8	5	3
Max. speed	mm/s	250	500	800	1000
Rated thrust *1	N	683	341	213	174
Repeatability	mm	±0.01			
Lost motion	mm	0.1 or less			
Drive system weight	kg	1.2			
Other inertia	kg·cm²	0.074			
Coefficient of friction		0.05			
Mechanical efficiency		0.8			
Ball screw length		Stroke + 200			
Dynamic allowable load	N	2651			
Static allowable moment	N·m	MP: 110, MY: 110, MR: 120			
Dynamic allowable moment	N·m	MP: 24.1, MY: 24.1, MR: 24.8			
Operating ambient temperature, humidity		0 to 40°C (no freezing) 35 to 80% RH (no condensation)			
Storage ambient temperature, humidity		-10 to 50°C (no freezing) 35 to 80% RH (no condensation)			
Atmosphere		No corrosive gas, explosive gas, or dust			

*1 The rated thrust and max. load capacity values are the allowable values for the actuator body; the actual thrust and load capacity are limited by the motor used.

Stroke and max. speed

(mm/s)

Screw lead \ Stroke length	100 to 750	800	850	900	950	1050
5	250	225	200	175	150	125
10	500	450	400	350	300	250
16	800	720	640	560	480	400
20	1000	900	800	700	600	500

*The max. speed is the speed when the motor mounted by the customer can output a rotation speed of 3000 rpm.
The max. speed is restricted by the stroke. Do not move at speeds beyond the limit.

Allowable overhang length

*Refer to page 674 for details.

Moment direction

MP MY MR

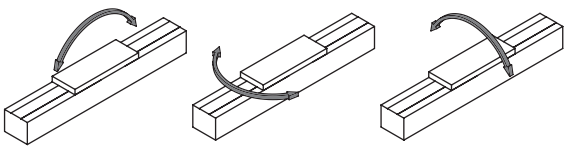

Dimensions Straight motor mounting

● ECS-10-*****-E

· Refer to page 680 for grease nipple dimensions.

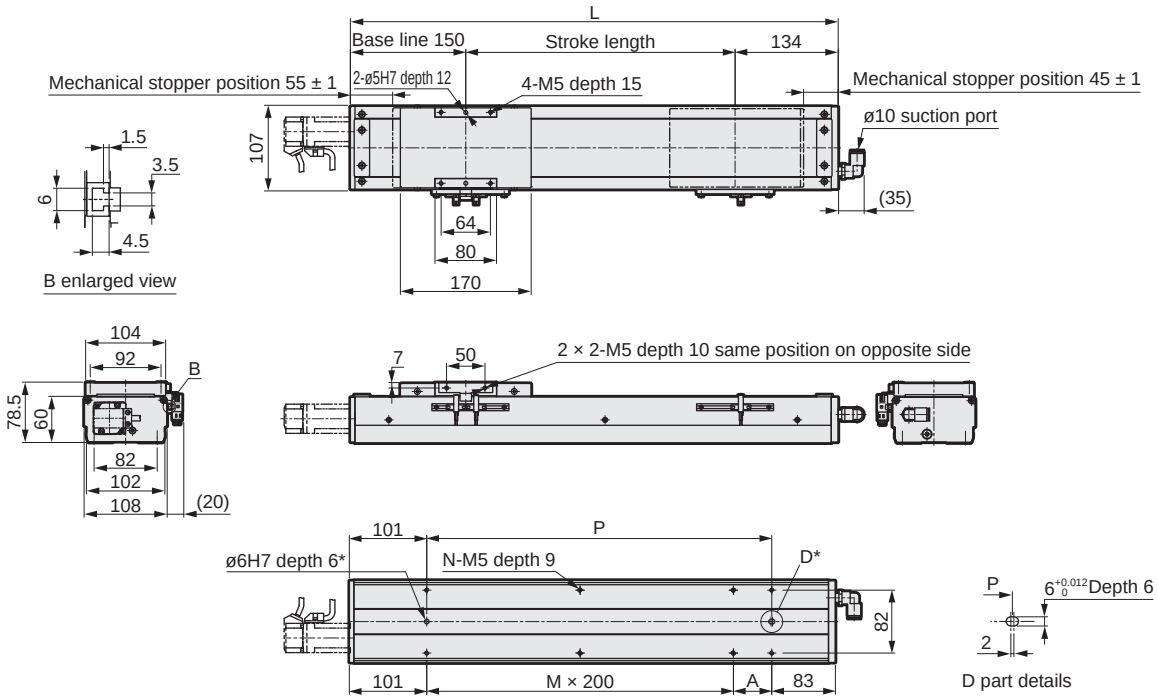

*Positioning pin hole (option)

Stroke length (mm)	50	100	150	200	250	300	350	400	450	500	550	600	650	700	750	800	850	900	950	1000	1050
L	334	384	434	484	534	584	634	684	734	784	834	884	934	984	1034	1084	1134	1184	1234	1284	1334
A	150	200	50	100	150	200	50	100	150	200	50	100	150	200	50	100	150	200	50	100	150
M	0	0	1	1	1	1	2	2	2	2	3	3	3	3	4	4	4	4	5	5	5
N	4	4	6	6	6	6	8	8	8	8	10	10	10	10	12	12	12	12	14	14	14
P	150	200	250	300	350	400	450	500	550	600	650	700	750	800	850	900	950	1000	1050	1100	1150
Weight (kg)	5.07	5.5	6.0	6.4	6.8	7.2	7.6	8.1	8.5	8.9	9.3	9.7	10.2	10.6	11.0	11.4	11.8	12.3	12.7	13.1	13.5

Motor mounting part

● ECS-10-E (□ 56)

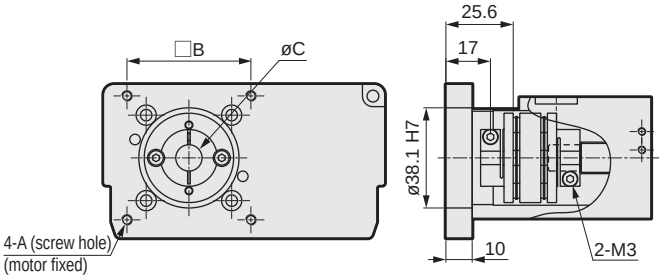

● ECS-10-E (□ 60)

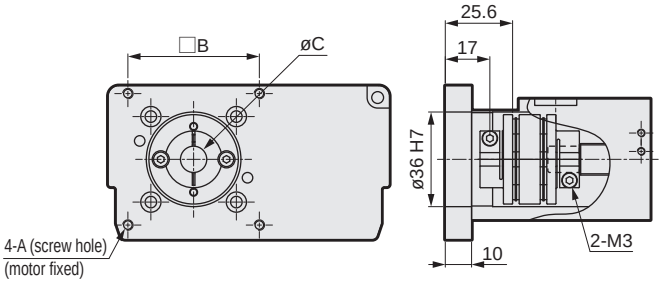

Mounted motor specification		A	B	C	Motor mounting bolt
A	□60	M4 depth 10	50	10	4-M4 × L12
B	□56	M4 depth 10	47.14	6.35	4-M4 × L12
C	□56	M4 depth 10	47.14	8	4-M4 × L12

List of attachments

[Motor mounting parts]

Mounted motor specification	Coupling	Fitting	Motor size	Motor mounting bolt	
				Size	Quantity
A	Assembled at shipment	Included at shipment	□56 □60	M4	4
B				M4	4
C				M4	4

*Refer to page 682 for fitting details.

[Origin sensor/Limit sensor]

Manufacturer	Model	Quantity
OMRON Corporation	EE-SX672	3

*Refer to page 678 for sensor specifications.



Electric actuator Ball screw drive Slider Low dust specification

ECS-10 Series

Motor side mounting (left, right, bottom)

● Stepper motor size: □56, □60

How to order

ECS - 10 - 05 040 - R A B N C B N P

Ⓐ Body size

10	Body width 102 mm

Ⓑ Screw lead

05	5 mm
10	10 mm
16	16 mm
20	20 mm

Ⓒ Stroke length

005 to 105	50 mm (In 50 mm increments) 1050 mm

Ⓓ Motor mounting direction *6

R	Right mounting
D	Bottom mounting
L	Left mounting

Ⓔ Mounted motor specification

A	Select the mounted motor specification from the table below.
B	
C	

Ⓕ Motor size

B	□56
C	□60

Ⓖ Brake

N	None

Ⓗ Origin sensor (1 pc) *1 *2 *3 *4 *7

N	None
A	Inside motor side
B	Inside motor opposite side
C	Outside motor side
D	Outside motor opposite side

Ⓘ Limit sensor (2 pcs) *1 *2 *3 *4 *7

N	None
A	Inside
B	Outside

Ⓙ Grease nipple *4 *5 *6 *7

N	None (Body mounting direction: Standard)
R	Right
L	Counterclockwise

Ⓚ Positioning pin hole

N	None
P	Yes

*1: Origin sensor and limit sensor are available as a set. As it is both-or-nothing, select "None" for both.
*2: Origin sensor B and limit sensor A cannot be combined.
*3: For sensor inside mounting, the user cannot adjust the position. (Assembled at shipment)
For sensor outside mounting, the user can adjust the position. (Included at shipment)
*4: Contact CKD to use the origin sensor, limit sensor and grease nipple in the same direction.
*5: "Body mounting direction: Standard" here refers to mounting from the bottom side.
*6: When selecting motor mounting direction R, grease nipple R cannot be selected.
When selecting L, grease nipple L cannot be selected.
*7: For sensor interior mounting, select "None" for the grease nipple.

Manufacturer	□56	□60
Oriental Motor Co., Ltd.	-	A
MinebeaMitsumi Inc.	B	-
Dyadic Systems Co., Ltd.	C	-

*Refer to page 641 for the motor model No.

Specifications

Applicable motor sizes		□56, □60 stepper motor			
Drive method		Ball screw ø16			
Ball screw accuracy grade		C7			
Stroke length	mm	50 to 1050			
Screw lead	mm	5	10	16	20
Max. load capacity *1	Horizontal kg	50	30	22	18
	Vertical kg	12	8	5	3
Max. speed	mm/s	250	500	800	1000
Rated thrust *1	N	683	341	213	174
Repeatability	mm	±0.01			
Lost motion	mm	0.1 or less			
Drive system weight	kg	1.2			
Other inertia	kg·cm²	0.730			
Coefficient of friction		0.05			
Mechanical efficiency		0.8			
Ball screw length		Stroke + 200			
Dynamic allowable load	N	2651			
Static allowable moment	N·m	MP: 110, MY: 110, MR: 120			
Dynamic allowable moment	N·m	MP: 24.1, MY: 24.1, MR: 24.8			
Operating ambient temperature, humidity		0 to 40°C (no freezing) 35 to 80% RH (no condensation)			
Storage ambient temperature, humidity		-10 to 50°C (no freezing) 35 to 80% RH (no condensation)			
Atmosphere		No corrosive gas, explosive gas, or dust			

*1 The rated thrust and max. load capacity values are the allowable values for the actuator body; the actual thrust and load capacity are limited by the motor used.

Stroke and max. speed

(mm/s)

Stroke length / Screw lead	100 to 750	800	850	900	950	1050
5	250	225	200	175	150	125
10	500	450	400	350	300	250
16	800	720	640	560	480	400
20	1000	900	800	700	600	500

*The max. speed is the speed when the motor mounted by the customer can output a rotation speed of 3000 rpm.
The max. speed is restricted by the stroke. Do not move at speeds beyond the limit.

Allowable overhang length

*Refer to page 674 for details.

Moment direction

MP MY MR

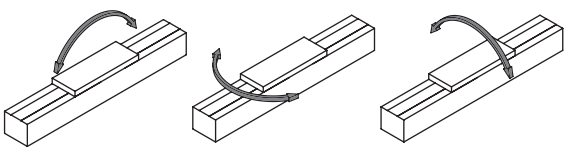

Dimensions Motor right-side mounting

● ECS-10-*****-R

· Refer to page 680 for grease nipple dimensions.

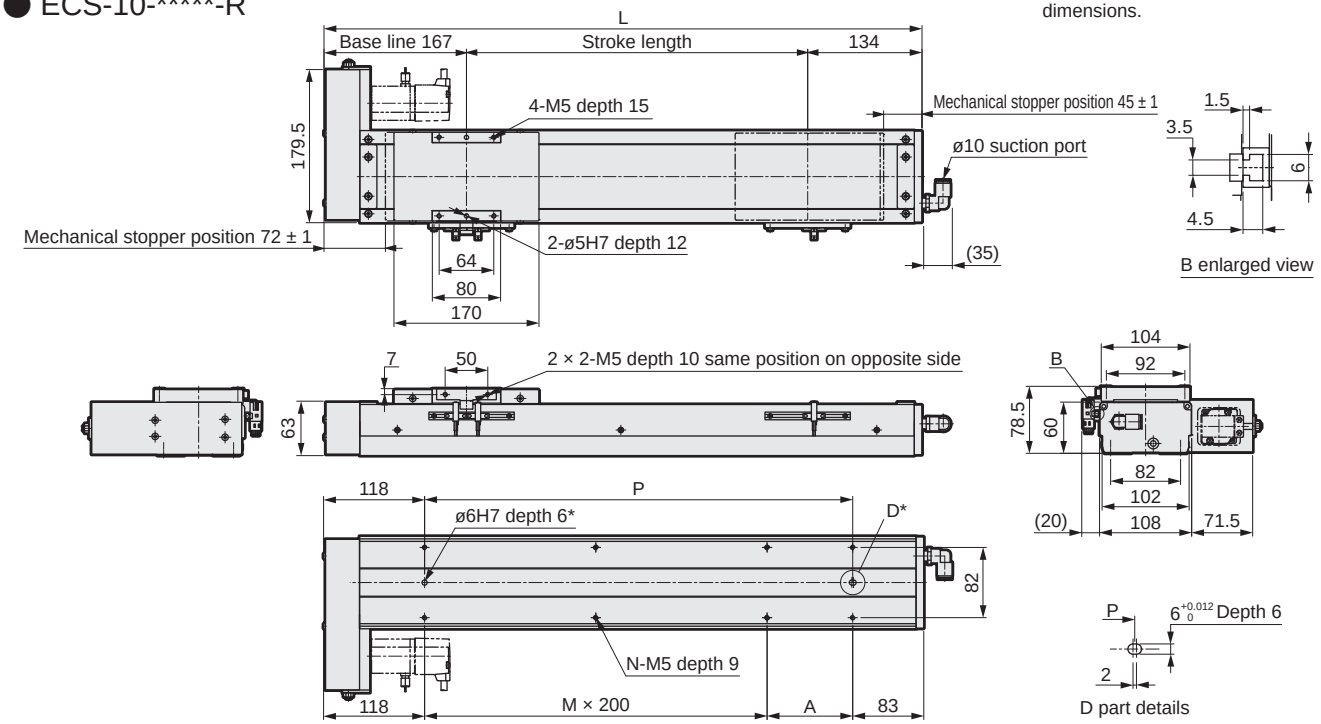

*Positioning pin hole (option)

Stroke length (mm)	50	100	150	200	250	300	350	400	450	500	550	600	650	700	750	800	850	900	950	1000	1050
L	351	401	451	501	551	601	651	701	751	801	851	901	951	1001	1051	1101	1151	1201	1251	1301	1351
A	150	200	50	100	150	200	50	100	150	200	50	100	150	200	50	100	150	200	50	100	150
M	0	0	1	1	1	1	2	2	2	2	3	3	3	3	4	4	4	4	5	5	5
N	4	4	6	6	6	6	8	8	8	8	10	10	10	10	12	12	12	12	14	14	14
P	150	200	250	300	350	400	450	500	550	600	650	700	750	800	850	900	950	1000	1050	1100	1150
Weight (kg)	5.5	5.9	6.4	6.8	7.2	7.6	8.0	8.4	8.8	9.2	9.7	10.1	10.5	10.9	11.3	11.7	12.1	12.5	13.0	13.4	13.8

Motor mounting part

● ECS-10-R (□ 56)

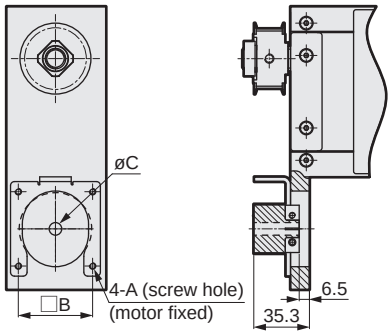

● ECS-10-R (□ 60)

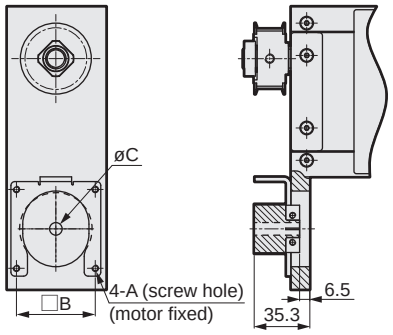

Mounted motor specification		A	B	C	Motor mounting bolt
A	□60	M4	50	10	4-M4 × L16
B	□56	M4	47.14	6.35	4-M4 × L16
C	□56	M4	47.14	8	4-M4 × L16

List of attachments

[Motor mounting parts]

Mounted motor specification	Timing belt, pulley	Fitting	Motor size	Motor mounting bolt	
				Size	Quantity
A	Included at shipment	Included at shipment	□56 □60	M4	4
B				M4	4
C				M4	4

*Refer to page 682 for fitting details.

[Origin sensor/Limit sensor]

Manufacturer	Model	Quantity
OMRON Corporation	EE-SX672	3

*Refer to page 678 for sensor specifications.

Dimensions Motor bottom mounting

● ECS-10-*****-D

· Refer to page 680 for grease nipple dimensions.

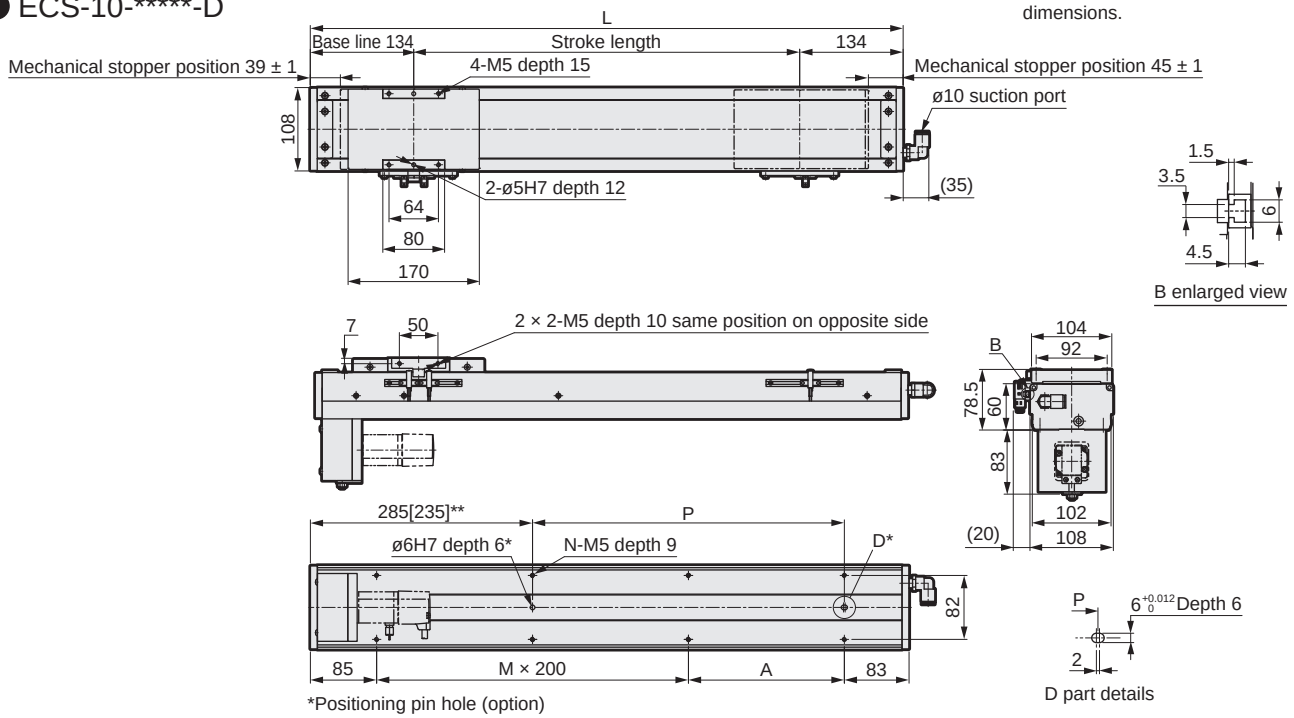

*Positioning pin hole (option)
** 50 stroke only
Only round positioning pin holes are available for strokes 50 and 100.

Stroke length (mm)	50	100	150	200	250	300	350	400	450	500	550	600	650	700	750	800	850	900	950	1000	1050
L	318	368	418	468	518	568	618	668	718	768	818	868	918	968	1018	1068	1118	1168	1218	1268	1318
A	150	200	50	100	150	200	50	100	150	200	50	100	150	200	50	100	150	200	50	100	150
M	0	0	1	1	1	1	2	2	2	2	3	3	3	3	4	4	4	4	5	5	5
N	4	4	6	6	6	6	8	8	8	8	10	10	10	10	12	12	12	12	14	14	14
P	0	0	50	100	150	200	250	300	350	400	450	500	550	600	650	700	750	800	850	900	950
Weight (kg)	5.5	5.9	6.4	6.8	7.2	7.6	8.0	8.4	8.8	9.2	9.7	10.1	10.5	10.9	11.3	11.7	12.1	12.5	13.0	13.4	13.8

Motor mounting part

● ECS-10-D (□ 56)

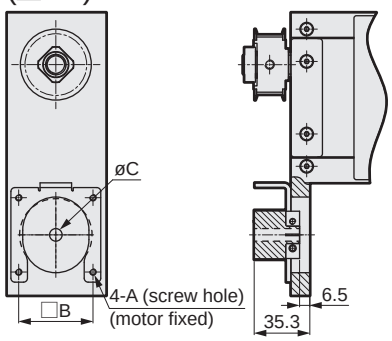

● ECS-10-D (□ 60)

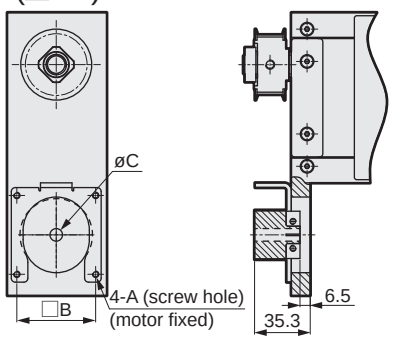

Mounted motor specification		A	B	C	Motor mounting bolt
A	□ 60	M4	50	10	4-M4 × L16
B	□ 56	M4	47.14	6.35	4-M4 × L16
C	□ 56	M4	47.14	8	4-M4 × L16

List of attachments

[Motor mounting parts]

Mounted motor specification	Timing belt, pulley	Fitting	Motor size	Motor mounting bolt	
				Size	Quantity
A	Included at shipment	Included at shipment	□ 56 □ 60	M4	4
B				M4	4
C				M4	4

*Refer to page 682 for fitting details.

[Origin sensor/Limit sensor]

Manufacturer	Model	Quantity
OMRON Corporation	EE-SX672	3

*Refer to page 678 for sensor specifications.

Dimensions Motor left-side mounting

● ECS-10-*****-L

· Refer to page 680 for grease nipple dimensions.

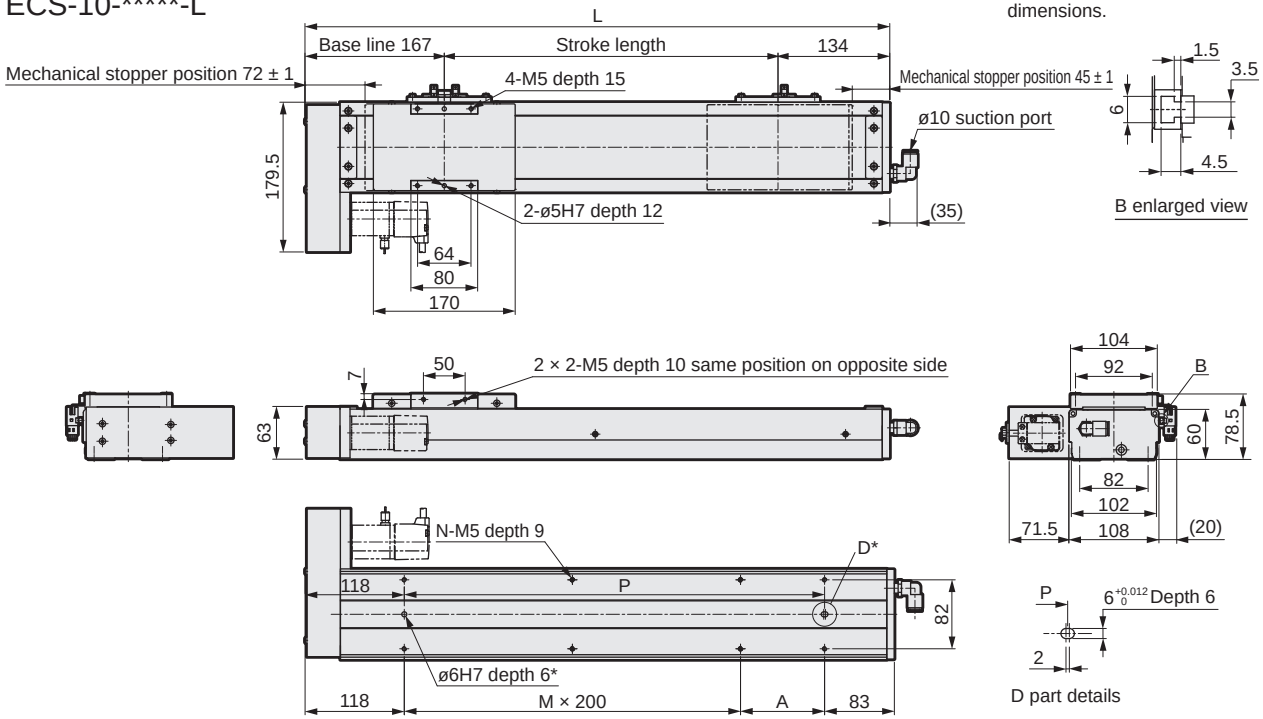

*Positioning pin hole (option)

Stroke length (mm)	50	100	150	200	250	300	350	400	450	500	550	600	650	700	750	800	850	900	950	1000	1050
L	351	401	451	501	551	601	651	701	751	801	851	901	951	1001	1051	1101	1151	1201	1251	1301	1351
A	150	200	50	100	150	200	50	100	150	200	50	100	150	200	50	100	150	200	50	100	150
M	0	0	1	1	1	1	2	2	2	2	3	3	3	3	4	4	4	4	5	5	5
N	4	4	6	6	6	6	8	8	8	8	10	10	10	10	12	12	12	12	14	14	14
P	150	200	250	300	350	400	450	500	550	600	650	700	750	800	850	900	950	1000	1050	1100	1150
Weight (kg)	5.5	5.9	6.4	6.8	7.2	7.6	8.0	8.4	8.8	9.2	9.7	10.1	10.5	10.9	11.3	11.7	12.1	12.5	13.0	13.4	13.8

Motor mounting part

● ECS-10-L (□56)

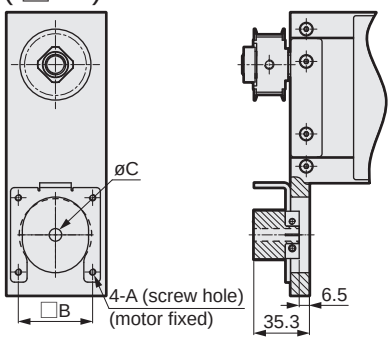

● ECS-10-L (□60)

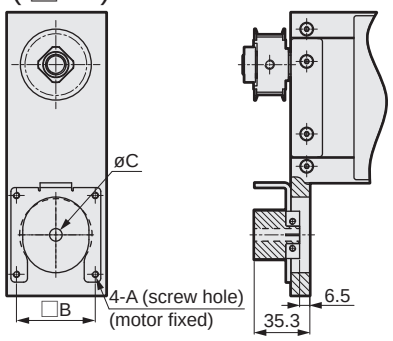

Mounted motor specification		A	B	C	Motor mounting bolt
A	□60	M4	50	10	4-M4 × L16
B	□56	M4	47.14	6.35	4-M4 × L16
C	□56	M4	47.14	8	4-M4 × L16

List of attachments

[Motor mounting parts]

Mounted motor specification	Timing belt, pulley	Fitting	Motor size	Motor mounting bolt	
				Size	Quantity
A	Included at shipment	Included at shipment	□56 □60	M4	4
B				M4	4
C				M4	4

*Refer to page 682 for fitting details.

[Origin sensor/Limit sensor]

Manufacturer	Model	Quantity
OMRON Corporation	EE-SX672	3

*Refer to page 678 for sensor specifications.

EBS
EBR
ETS
ETSMulti-Axis
ECS
ETV
ECV
EKS
Servo motor compatible
EBS
EBR
ETS
ECS
Stepper motor compatible
Safety precautions

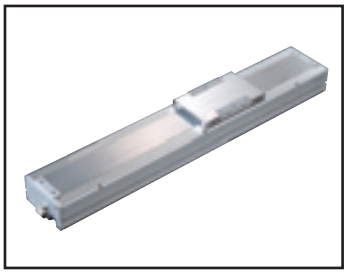

Electric actuator Ball screw drive Slider Low dust specification

ECS-12 Series

Straight motor mounting

● Stepper motor size: □56, □60

How to order

ECS - 12 - 05 040 - E A B N N N N P

Ⓐ Ⓑ Ⓒ Ⓓ Ⓔ Ⓕ Ⓖ Ⓗ Ⓘ Ⓙ Ⓚ

Ⓐ Body size

12	Body width 102 mm

Ⓑ Screw lead

05	5 mm
10	10 mm
16	16 mm
20	20 mm

Ⓒ Stroke length

005 to 105	50 mm (In 50 mm increments) 1050 mm

Ⓓ Motor mounting direction

E	Straight mounting

Ⓔ Mounted motor specification

A	Select the mounted motor specification from the table below.
B	
C	

Ⓕ Motor size

B	□56
C	□60

Ⓖ Brake

N	None

Ⓗ Origin sensor (1 pc) *1 *2 *3

N	None
A	Inside motor side
B	Inside motor opposite side
C	Outside motor side
D	Outside motor opposite side

Ⓘ Limit sensor (2 pcs) *1 *2 *3

N	None
A	Inside
B	Outside

Ⓙ Grease nipple *3 *4

N	None (Body mounting direction: Standard)
R	Right
L	Counterclockwise

Ⓚ Positioning pin hole

N	None
P	Yes

Manufacturer	□ 56	□ 60
Oriental Motor Co., Ltd.	-	A
MinebeaMitsumi Inc.	B	-
Dyadic Systems Co., Ltd.	C	-

*Refer to page 641 for the motor model No.

*1: Origin sensor and limit sensor are available as a set. As it is both-or-nothing, select "None" for both.
*2: For sensor inside mounting, the user cannot adjust the position. (Assembled at shipment)
For sensor outside mounting, the user can adjust the position. (Included at shipment)
*3: Contact CKD to use the origin sensor, limit sensor and grease nipple in the same direction.
*4: "Body mounting direction: Standard" here refers to mounting from the bottom side.

Specifications

Applicable motor sizes		□56, □60 stepper motor			
Drive method		Ball screw ø16			
Ball screw accuracy grade		C7			
Stroke length	mm	50 to 1050			
Screw lead	mm	5	10	16	20
Max. load capacity *1	Horizontal kg	50	30	22	18
	Vertical kg	12	8	5	3
Max. speed	mm/s	250	500	800	1000
Rated thrust *1	N	683	341	213	174
Repeatability	mm	±0.01			
Lost motion	mm	0.1 or less			
Drive system weight	kg	0.9			
Other inertia	kg·cm²	0.040			
Coefficient of friction		0.05			
Mechanical efficiency		0.8			
Ball screw length		Stroke + 200			
Dynamic allowable load	N	1660			
Static allowable moment	N·m	MP: 150, MY: 150, MR: 130			
Dynamic allowable moment	N·m	MP: 42.3, MY: 42.3, MR: 53.1			
Operating ambient temperature, humidity		0 to 40°C (no freezing) 35 to 80% RH (no condensation)			
Storage ambient temperature, humidity		-10 to 50°C (no freezing) 35 to 80% RH (no condensation)			
Atmosphere		No corrosive gas, explosive gas, or dust			

*1 The rated thrust and max. load capacity values are the allowable values for the actuator body; the actual thrust and load capacity are limited by the motor used.

Stroke and max. speed

(mm/s)

Stroke length / Screw lead	100 to 750	800	850	900	950	1050
5	250	225	200	175	150	125
10	500	450	400	350	300	250
16	800	720	640	560	480	400
20	1000	900	800	700	600	500

*The max. speed is the speed when the motor mounted by the customer can output a rotation speed of 3000 rpm.
The max. speed is restricted by the stroke. Do not move at speeds beyond the limit.

Allowable overhang length

*Refer to page 674 for details.

Moment direction

MP MY MR

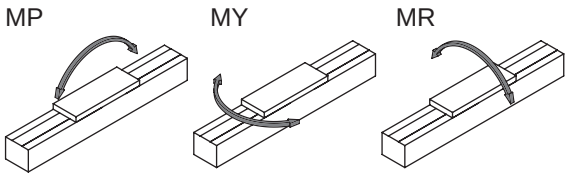

Dimensions Straight motor mounting

● ECS-12-*****-E

· Refer to page 680 for grease nipple dimensions.

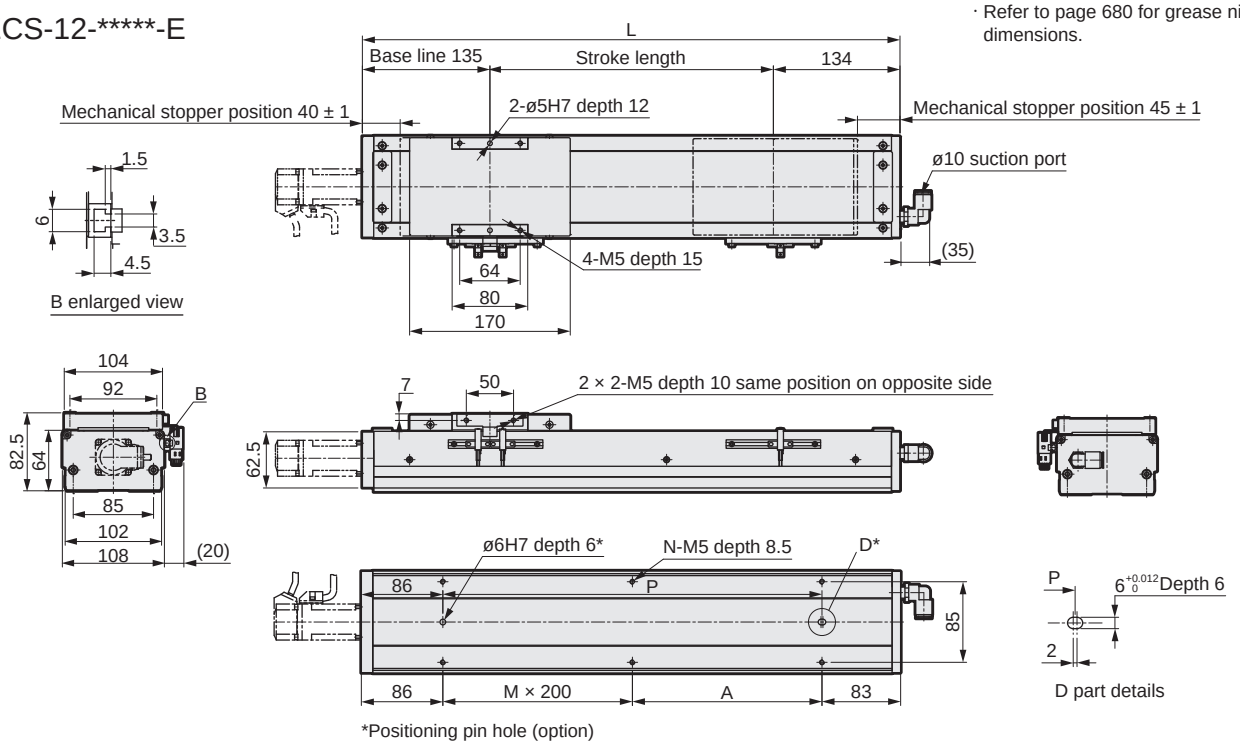

*Positioning pin hole (option)

Stroke length (mm)	50	100	150	200	250	300	350	400	450	500	550	600	650	700	750	800	850	900	950	1000	1050
L	319	369	419	469	519	569	619	669	719	769	819	869	919	969	1019	1069	1119	1169	1219	1269	1319
A	150	200	50	100	150	200	50	100	150	200	50	100	150	200	50	100	150	200	50	100	150
M	0	0	1	1	1	1	2	2	2	2	3	3	3	3	4	4	4	4	5	5	5
N	4	4	6	6	6	6	8	8	8	8	10	10	10	10	12	12	12	12	14	14	14
P	150	200	250	300	350	400	450	500	550	600	650	700	750	800	850	900	950	1000	1050	1100	1150
Weight (kg)	5.6	6.1	6.5	6.9	7.3	7.8	8.2	8.6	9.0	9.5	9.9	10.3	10.7	11.2	11.6	12.0	12.4	12.9	13.3	13.7	14.1

Motor mounting part

● ECS-12-E (□ 56)

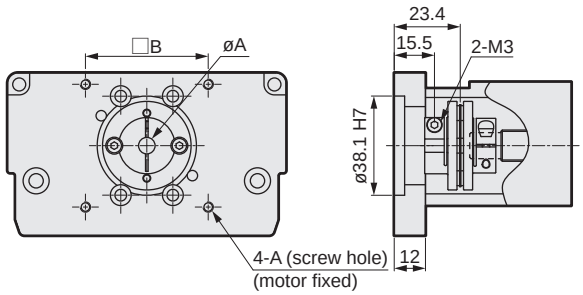

● ECS-12-E (□ 60)

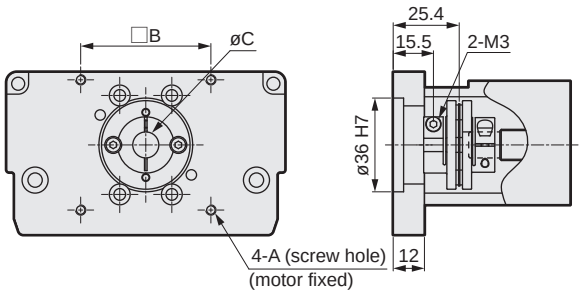

Mounted motor specification		A	B	C	Motor mounting bolt
A	□60	M4 depth 12	50	10	4-M4 × L16
B	□56	M4 depth 12	47.14	6.35	4-M4 × L16
C	□56	M4 depth 12	47.14	8	4-M4 × L16

List of attachments

[Motor mounting parts]

Mounted motor specification	Coupling	Fitting	Motor size	Motor mounting bolt	
				Size	Quantity
A	Assembled at shipment	Included at shipment	□56 □60	M4	4
B				M4	4
C				M4	4

*Refer to page 682 for fitting details.

[Origin sensor/Limit sensor]

Manufacturer	Model	Quantity
OMRON Corporation	EE-SX672	3

*Refer to page 678 for sensor specifications.



Electric actuator Ball screw drive Slider Low dust specification

ECS-12 Series

Motor side mounting (left, right, bottom)

● Stepper motor size: □56, □60

How to order

ECS - 12 - 05 040 - R A B N N N N P

Ⓐ Body size

12	Body width 102 mm

Ⓑ Screw lead

05	5 mm
10	10 mm
16	16 mm
20	20 mm

Ⓒ Stroke length

005 to 105	50 mm (In 50 mm increments) 1050 mm

Ⓓ Motor mounting direction *3 *6

R	Right mounting
D	Bottom mounting
L	Left mounting

Ⓔ Mounted motor specification

A	Select the mounted motor specification from the table below.
B	
C	

Ⓕ Motor size

B	□56
C	□60

Ⓖ Brake

N	None

Ⓗ Origin sensor (1 pc) *1 *2 *3 *4

N	None
A	Inside motor side
B	Inside motor opposite side
C	Outside motor side
D	Outside motor opposite side

Ⓘ Limit sensor (2 pcs) *1 *2 *3 *4

N	None
A	Inside
B	Outside

Ⓙ Grease nipple *4 *5 *6

N	None (Body mounting direction: Standard)
R	Right
L	Counterclockwise

Ⓚ Positioning pin hole

N	None
P	Yes

*1: Origin sensor and limit sensor are available as a set. As it is both-or-nothing, select "None" for both.
*2: For sensor inside mounting, the user cannot adjust the position. (Assembled at shipment)
For sensor outside mounting, the user can adjust the position. (Included at shipment)
*3: When the motor mounting direction is R or L, origin sensor A and limit sensor A cannot be combined.
*4: Contact CKD to use the origin sensor, limit sensor and grease nipple in the same direction.
*5: "Body mounting direction: Standard" here refers to mounting from the bottom side.
*6: When selecting motor mounting direction R, grease nipple R cannot be selected.
When selecting L, grease nipple L cannot be selected.

Manufacturer	□56	□60
Oriental Motor Co., Ltd.	-	A
MinebeaMitsumi Inc.	B	-
Dyadic Systems Co., Ltd.	C	-

*Refer to page 641 for the motor model No.

Specifications

Applicable motor sizes		□56, □60 stepper motor			
Drive method		Ball screw ø16			
Ball screw accuracy grade		C7			
Stroke length	mm	50 to 1050			
Screw lead	mm	5	10	16	20
Max. load capacity *1	Horizontal kg	50	30	22	18
	Vertical kg	12	8	5	3
Max. speed	mm/s	250	500	800	1000
Rated thrust *1	N	683	341	213	174
Repeatability	mm	±0.01			
Lost motion	mm	0.1 or less			
Drive system weight	kg	0.9			
Other inertia	kg·cm²	0.730			
Coefficient of friction		0.05			
Mechanical efficiency		0.8			
Ball screw length		Stroke + 200			
Dynamic allowable load	N	1660			
Static allowable moment	N·m	MP: 150, MY: 150, MR: 130			
Dynamic allowable moment	N·m	MP: 42.3, MY: 42.3, MR: 53.1			
Operating ambient temperature, humidity		0 to 40°C (no freezing) 35 to 80% RH (no condensation)			
Storage ambient temperature, humidity		-10 to 50°C (no freezing) 35 to 80% RH (no condensation)			
Atmosphere		No corrosive gas, explosive gas, or dust			

*1 The rated thrust and max. load capacity values are the allowable values for the actuator body; the actual thrust and load capacity are limited by the motor used.

Stroke and max. speed

(mm/s)

Screw lead \ Stroke length	100 to 750	800	850	900	950	1050
5	250	225	200	175	150	125
10	500	450	400	350	300	250
16	800	720	640	560	480	400
20	1000	900	800	700	600	500

*The max. speed is the speed when the motor mounted by the customer can output a rotation speed of 3000 rpm.
The max. speed is restricted by the stroke. Do not move at speeds beyond the limit.

Allowable overhang length

*Refer to page 674 for details.

Moment direction

MP MY MR

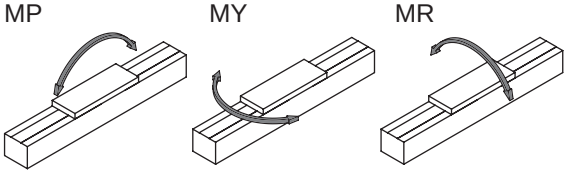

Dimensions Motor right-side mounting

● ECS-12-*****-R

· Refer to page 680 for grease nipple dimensions.

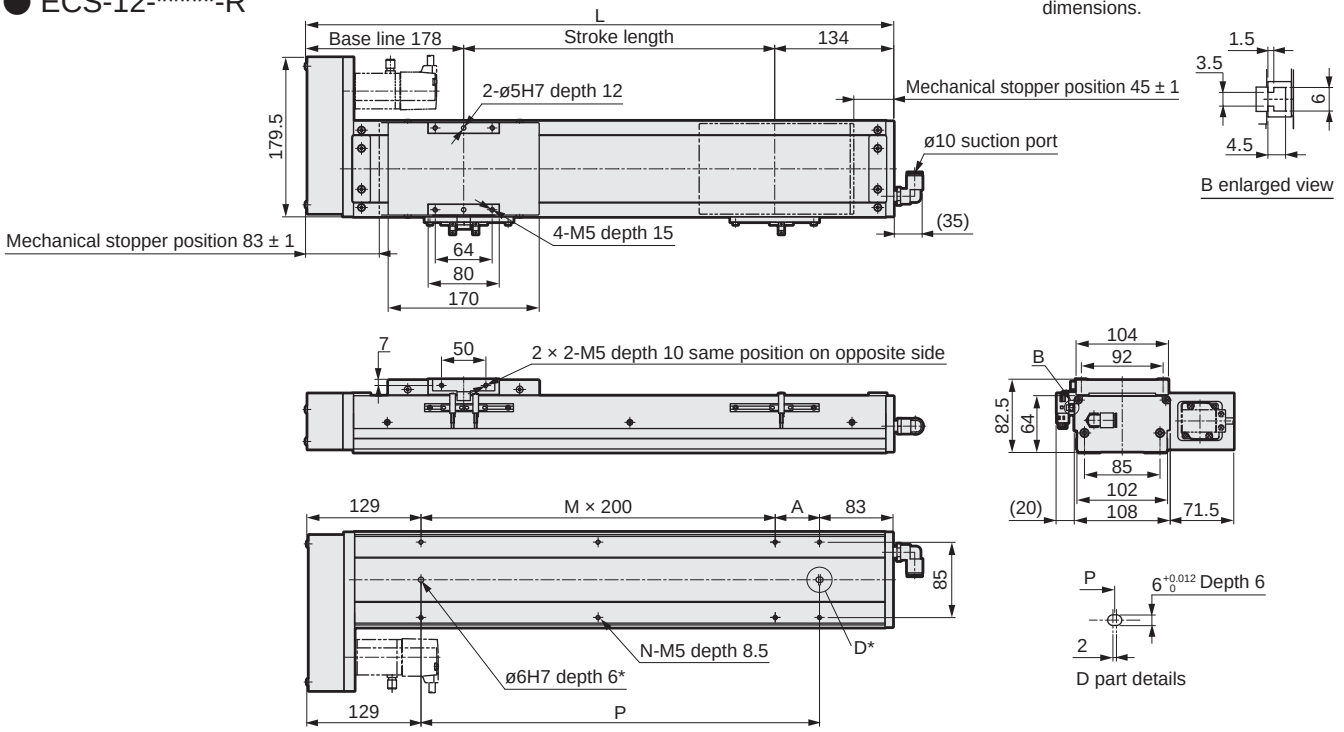

*Positioning pin hole (option)

Stroke length (mm)	50	100	150	200	250	300	350	400	450	500	550	600	650	700	750	800	850	900	950	1000	1050
L	362	412	462	512	562	612	662	712	762	812	862	912	962	1012	1062	1112	1162	1212	1262	1312	1362
A	150	200	50	100	150	200	50	100	150	200	50	100	150	200	50	100	150	200	50	100	150
M	0	0	1	1	1	1	2	2	2	2	3	3	3	3	4	4	4	4	5	5	5
N	4	4	6	6	6	6	8	8	8	8	10	10	10	10	12	12	12	12	14	14	14
P	150	200	250	300	350	400	450	500	550	600	650	700	750	800	850	900	950	1000	1050	1100	1150
Weight (kg)	6.4	6.9	7.3	7.7	8.2	8.6	9.0	9.4	9.9	10.3	10.7	11.1	11.6	12.0	12.4	12.8	13.3	13.7	14.1	14.5	15.0

Motor mounting part

● ECS-10-R (□ 56)

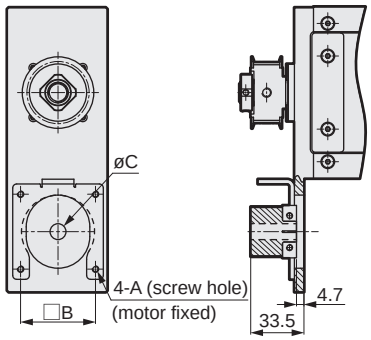

● ECS-10-R (□ 60)

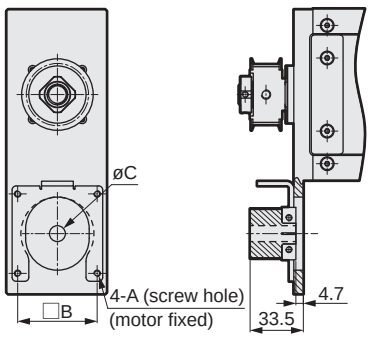

Mounted motor specification		A	B	C	Motor mounting bolt
A	□60	M4	50	10	4-M4 × L16
B	□56	M4	47.14	6.35	4-M4 × L16
C	□56	M4	47.14	8	4-M4 × L16

List of attachments

[Motor mounting parts]

Mounted motor specification	Timing belt, pulley	Fitting	Motor size	Motor mounting bolt	
				Size	Quantity
A	Included at shipment	Included at shipment	□56 □60	M4	4
B				M4	4
C				M4	4

*Refer to page 682 for fitting details.

[Origin sensor/Limit sensor]

Manufacturer	Model	Quantity
OMRON Corporation	EE-SX672	3

*Refer to page 678 for sensor specifications.

Dimensions Motor bottom mounting

● ECS-12-*****-D

· Refer to page 680 for grease nipple dimensions.

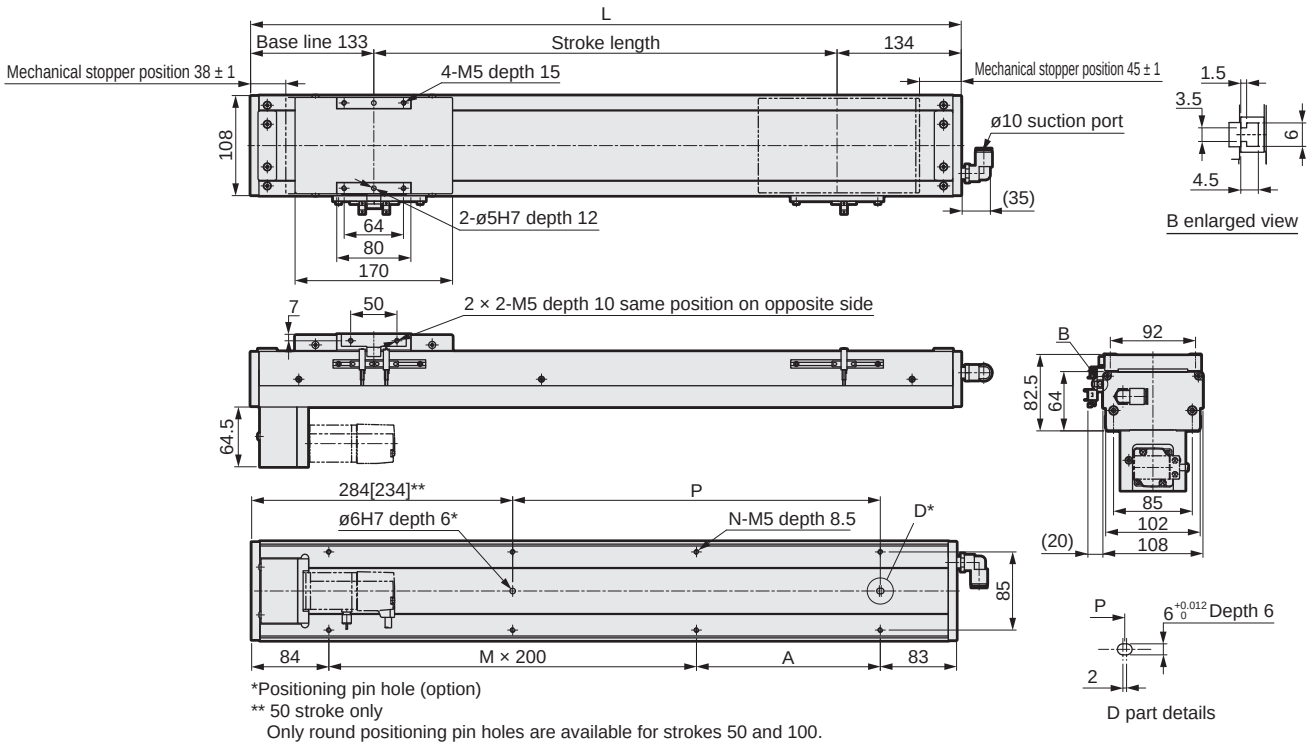

*Positioning pin hole (option)
** 50 stroke only
Only round positioning pin holes are available for strokes 50 and 100.

Stroke length (mm)	50	100	150	200	250	300	350	400	450	500	550	600	650	700	750	800	850	900	950	1000	1050
L	317	367	417	467	517	567	617	667	717	767	817	867	917	967	1017	1067	1117	1167	1217	1267	1317
A	150	200	50	100	150	200	50	100	150	200	50	100	150	200	50	100	150	200	50	100	150
M	0	0	1	1	1	1	2	2	2	2	3	3	3	3	4	4	4	4	5	5	5
N	4	4	6	6	6	6	8	8	8	8	10	10	10	10	12	12	12	12	14	14	14
P	0	0	50	100	150	200	250	300	350	400	450	500	550	600	650	700	750	800	850	900	950
Weight (kg)	6.4	6.9	7.3	7.7	8.2	8.6	9.0	9.4	9.9	10.3	10.7	11.1	11.6	12.0	12.4	12.8	13.3	13.7	14.1	14.5	15.0

Motor mounting part

● ECS-12-D (□ 56)

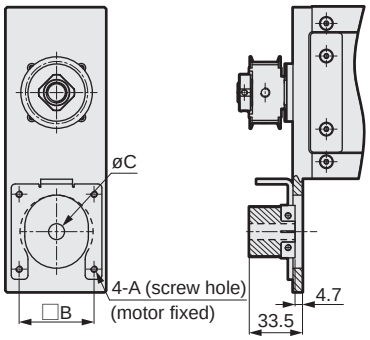

● ECS-12-D (□ 60)

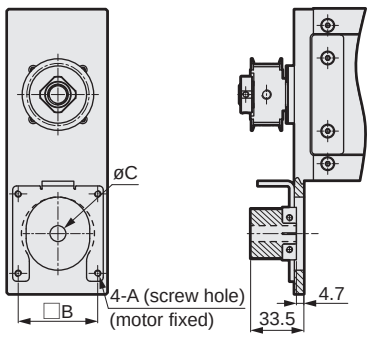

Mounted motor specification		A	B	C	Motor mounting bolt
A	□ 60	M4	50	10	4-M4 × L16
B	□ 56	M4	47.14	6.35	4-M4 × L16
C	□ 56	M4	47.14	8	4-M4 × L16

List of attachments

[Motor mounting parts]

Mounted motor specification	Timing belt, pulley	Fitting	Motor size	Motor mounting bolt	
				Size	Quantity
A	Included at shipment	Included at shipment	□ 56 □ 60	M4	4
B				M4	4
C				M4	4

*Refer to page 682 for fitting details.

[Origin sensor/Limit sensor]

Manufacturer	Model	Quantity
OMRON Corporation	EE-SX672	3

*Refer to page 678 for sensor specifications.

Dimensions Motor left-side mounting

● ECS-12-*****-L

· Refer to page 680 for grease nipple dimensions.

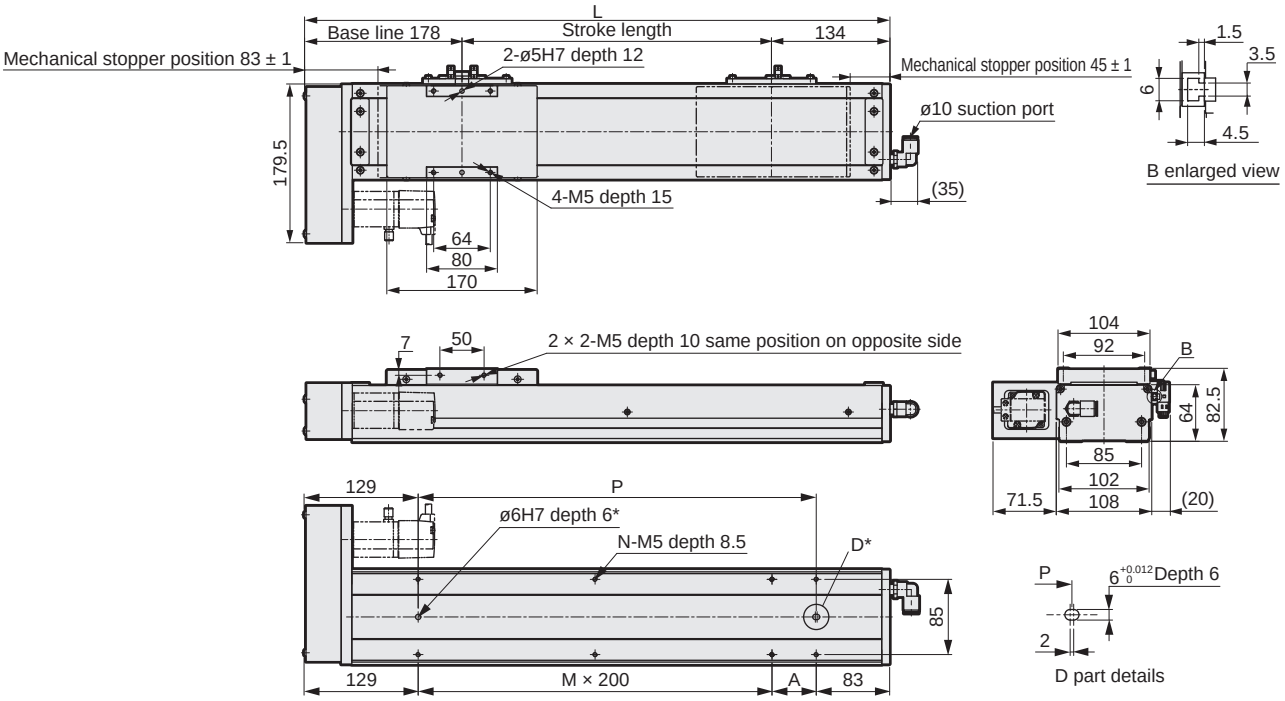

*Positioning pin hole (option)

Stroke length (mm)	50	100	150	200	250	300	350	400	450	500	550	600	650	700	750	800	850	900	950	1000	1050
L	362	412	462	512	562	612	662	712	762	812	862	912	962	1012	1062	1112	1162	1212	1262	1312	1362
A	150	200	50	100	150	200	50	100	150	200	50	100	150	200	50	100	150	200	50	100	150
M	0	0	1	1	1	1	2	2	2	2	3	3	3	3	4	4	4	4	5	5	5
N	4	4	6	6	6	6	8	8	8	8	10	10	10	10	12	12	12	12	14	14	14
P	150	200	250	300	350	400	450	500	550	600	650	700	750	800	850	900	950	1000	1050	1100	1150
Weight (kg)	6.4	6.9	7.3	7.7	8.2	8.6	9.0	9.4	9.9	10.3	10.7	11.1	11.6	12.0	12.4	12.8	13.3	13.7	14.1	14.5	15.0

Motor mounting part

● ECS-12-L (□ 56)

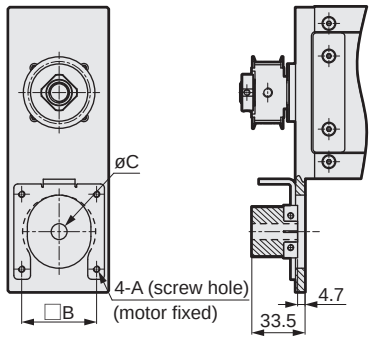

● ECS-12-L (□ 60)

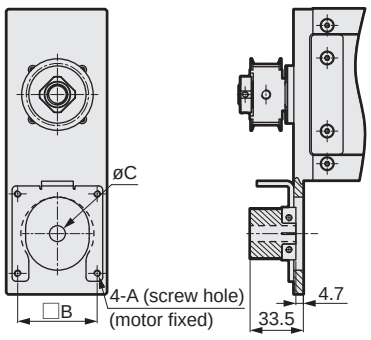

Mounted motor specification		A	B	C	Motor mounting bolt
A	□60	M4	50	10	4-M4 × L16
B	□56	M4	47.14	6.35	4-M4 × L16
C	□56	M4	47.14	8	4-M4 × L16

List of attachments

[Motor mounting parts]

Mounted motor specification	Timing belt, pulley	Fitting	Motor size	Motor mounting bolt	
				Size	Quantity
A	Included at shipment	Included at shipment	□56 □60	M4	4
B				M4	4
C				M4	4

*Refer to page 682 for fitting details.

[Origin sensor/Limit sensor]

Manufacturer	Model	Quantity
OMRON Corporation	EE-SX672	3

*Refer to page 678 for sensor specifications.

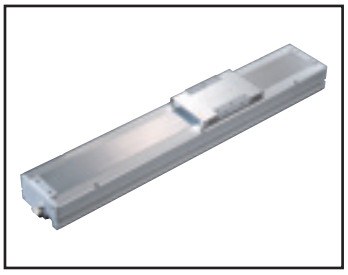

Electric actuator Ball screw drive Slider Low dust specification

ECS-14 Series

Straight motor mounting

● Stepper motor size: □56, □60

How to order

ECS - 14 - 05 040 - E A B N N N N P

Ⓐ Ⓑ Ⓒ Ⓓ Ⓔ Ⓕ Ⓖ Ⓗ Ⓘ Ⓙ Ⓚ

Ⓐ Body size

14	Body width 135 mm

Ⓑ Screw lead

05	5 mm
10	10 mm
16	16 mm
20	20 mm

Ⓒ Stroke length

005 to 105	50 mm (In 50 mm increments) 1050 mm

Ⓓ Motor mounting direction

E	Straight mounting

Ⓔ Mounted motor specification

A	Select the mounted motor specification from the table below.
B	
C	

Ⓕ Motor size

B	□56
C	□60

Ⓖ Brake

N	None

Ⓗ Origin sensor (1 pc) *1 *2 *3

N	None
A	Inside motor side
B	Inside motor opposite side
C	Outside motor side
D	Outside motor opposite side

Ⓘ Limit sensor (2 pcs) *1 *2 *3

N	None
A	Inside
B	Outside

Ⓙ Grease nipple *3 *4

N	None (Body mounting direction: Standard)
R	Right
L	Counterclockwise

Ⓚ Positioning pin hole

N	None
P	Yes

*1: Origin sensor and limit sensor are available as a set. As it is both-or-nothing, select "None" for both.
*2: For sensor inside mounting, the user cannot adjust the position. (Assembled at shipment)
For sensor outside mounting, the user can adjust the position. (Included at shipment)
*3: Contact CKD to use the origin sensor, limit sensor and grease nipple in the same direction.
*4: "Body mounting direction: Standard" here refers to mounting from the bottom side.

Manufacturer	□ 56	□ 60
Oriental Motor Co., Ltd.	-	A
MinebeaMitsumi Inc.	B	-
Dyadic Systems Co., Ltd.	C	-

*Refer to page 641 for the motor model No.

Specifications

Applicable motor sizes		□56, □60 stepper motor			
Drive method		Ball screw ø16			
Ball screw accuracy grade		C7			
Stroke length	mm	50 to 1050			
Screw lead	mm	5	10	16	20
Max. load capacity *1	Horizontal kg	110	88	48	40
	Vertical kg	33	22	10	8
Max. speed	mm/s	250	500	800	1000
Rated thrust *1	N	1388	694	433	347
Repeatability	mm	±0.01			
Lost motion	mm	0.1 or less			
Drive system weight	kg	1.6			
Other inertia	kg·cm²	0.074			
Coefficient of friction		0.05			
Mechanical efficiency		0.8			
Ball screw length		Stroke + 200			
Dynamic allowable load	N	6567			
Static allowable moment	N·m	MP: 552, MY: 551, MR: 485			
Dynamic allowable moment	N·m	MP: 262.7, MY: 262.7, MR: 261.0			
Operating ambient temperature, humidity		0 to 40°C (no freezing) 35 to 80% RH (no condensation)			
Storage ambient temperature, humidity		-10 to 50°C (no freezing) 35 to 80% RH (no condensation)			
Atmosphere		No corrosive gas, explosive gas, or dust			

*1 The rated thrust and max. load capacity values are the allowable values for the actuator body; the actual thrust and load capacity are limited by the motor used.

Stroke and max. speed

(mm/s)

Screw lead \ Stroke length	100 to 750	800	850	900	950	1050
5	250	225	200	175	150	125
10	500	450	400	350	300	250
16	800	720	640	560	480	400
20	1000	900	800	700	600	500

*The max. speed is the speed when the motor mounted by the customer can output a rotation speed of 3000 rpm.
The max. speed is restricted by the stroke. Do not move at speeds beyond the limit.

Allowable overhang length

*Refer to page 674 for details.

Moment direction

MP MY MR

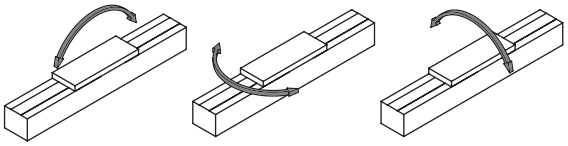

Dimensions Straight motor mounting

● ECS-14-*****-E

· Refer to page 680 for grease nipple dimensions.

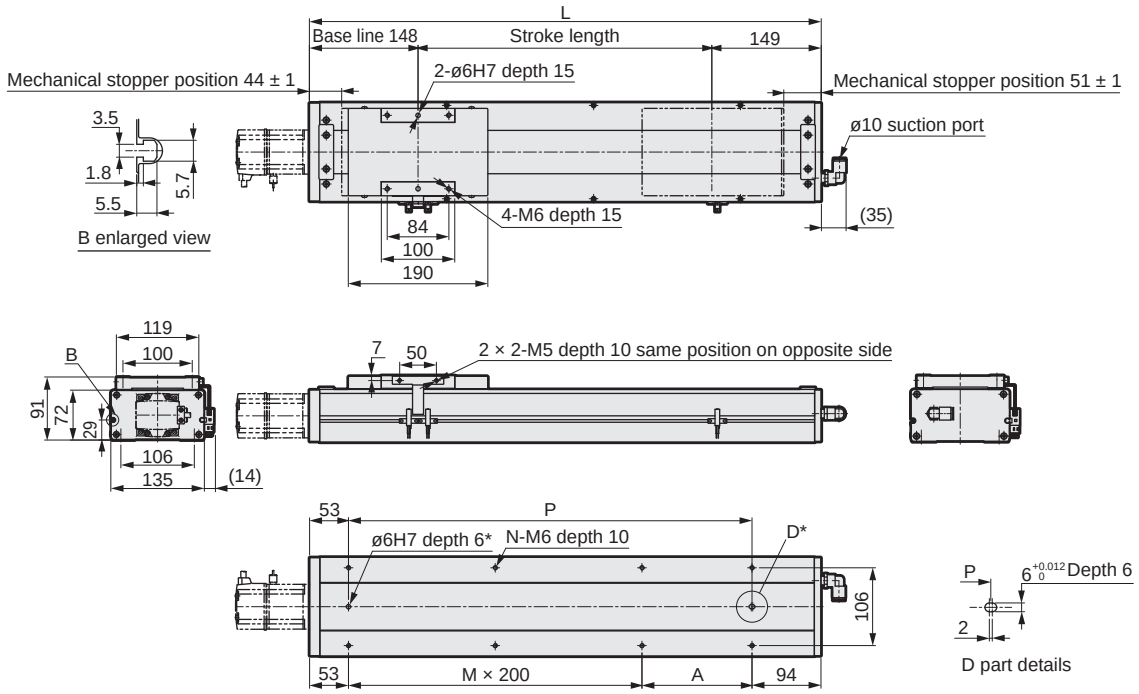

*Positioning pin hole (option)

Stroke length (mm)	50	100	150	200	250	300	350	400	450	500	550	600	650	700	750	800	850	900	950	1000	1050
L	347	397	447	497	547	597	647	697	747	797	847	897	947	997	1047	1097	1147	1197	1247	1297	1347
A	200	50	100	150	200	50	100	150	200	50	100	150	200	50	100	150	200	50	100	150	200
M	0	1	1	1	1	2	2	2	2	3	3	3	3	4	4	4	4	5	5	5	5
N	4	6	6	6	6	8	8	8	8	10	10	10	10	12	12	12	12	14	14	14	14
P	200	250	300	350	400	450	500	550	600	650	700	750	800	850	900	950	1000	1050	1100	1150	1200
Weight (kg)	10.5	11.1	11.7	12.3	12.9	13.5	14.1	14.7	15.3	15.9	16.5	17.1	17.7	18.3	18.9	19.5	20.1	20.7	21.3	21.9	22.5

Motor mounting part

● ECS-14-E (□ 56)

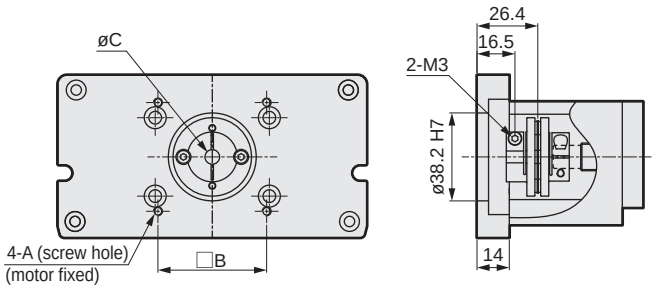

● ECS-14-E (□ 60)

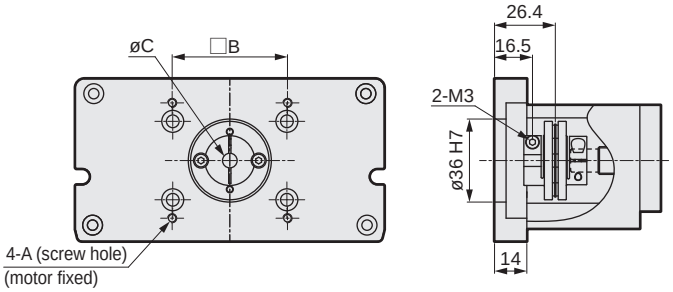

Mounted motor specification		A	B	C	Motor mounting bolt
A	□60	M4 depth 14	50	10	4-M4 × L16
B	□56	M4 depth 14	47.14	6.35	4-M4 × L16
C	□56	M4 depth 14	47.14	8	4-M4 × L16

List of attachments

[Motor mounting parts]

Mounted motor specification	Coupling	Fitting	Motor size	Motor mounting bolt	
				Size	Quantity
A	Assembled at shipment	Included at shipment	□56 □60	M4	4
B				M4	4
C				M4	4

*Refer to page 682 for fitting details.

[Origin sensor/Limit sensor]

Manufacturer	Model	Quantity
OMRON Corporation	EE-SX672	3

*Refer to page 678 for sensor specifications.



Electric actuator Ball screw drive Slider Low dust specification

ECS-14 Series

Motor side mounting (left, right, bottom)

● Stepper motor size: □56, □60

How to order

ECS - 14 - 05 050 - R A B N N N N P

Ⓐ Ⓑ Ⓒ Ⓓ Ⓔ Ⓕ Ⓖ Ⓗ Ⓘ Ⓙ Ⓚ

Ⓐ Body size	
14	Body width 135 mm

Ⓑ Screw lead	
05	5 mm
10	10 mm
16	16 mm
20	20 mm

Ⓒ Stroke length	
005 to 105	50 mm (In 50 mm increments) 1050 mm

Ⓓ Motor mounting direction *5	
R	Right mounting
D	Bottom mounting
L	Left mounting

Ⓔ Mounted motor specification	
A	Select the mounted motor specification from the table below.
B	
C	

Ⓕ Motor size	
B	□56
C	□60

Ⓖ Brake	
N	None

Ⓗ Origin sensor (1 pc) *1 *2 *3	
N	None
A	Inside motor side
B	Inside motor opposite side
C	Outside motor side
D	Outside motor opposite side

Ⓘ Limit sensor (2 pcs) *1 *2 *3	
N	None
A	Inside
B	Outside

Ⓙ Grease nipple *3 *4 *5	
N	None (Body mounting direction: Standard)
R	Right
L	Counterclockwise

Ⓚ Positioning pin hole	
N	None
P	Yes

*1: Origin sensor and limit sensor are available as a set. As it is both-or-nothing, select "None" for both.
*2: For sensor inside mounting, the user cannot adjust the position. (Assembled at shipment)
For sensor outside mounting, the user can adjust the position. (Included at shipment)
*3: Contact CKD to use the origin sensor, limit sensor and grease nipple in the same direction.
*4: "Body mounting direction: Standard" here refers to mounting from the bottom side.
*5: When selecting motor mounting direction R, grease nipple R cannot be selected.
When selecting L, grease nipple L cannot be selected.

Manufacturer	□ 56	□ 60
Oriental Motor Co., Ltd.	-	A
MinebeaMitsumi Inc.	B	-
Dyadic Systems Co., Ltd.	C	-

*Refer to page 641 for the motor model No.

Specifications

Applicable motor sizes		□56, □60 stepper motor			
Drive method		Ball screw ø16			
Ball screw accuracy grade		C7			
Stroke length	mm	50 to 1050			
Screw lead	mm	5	10	16	20
Max. load capacity *1	Horizontal kg	110	88	48	40
	Vertical kg	33	22	10	8
Max. speed	mm/s	250	500	800	1000
Rated thrust *1	N	1388	694	433	347
Repeatability	mm	±0.01			
Lost motion	mm	0.1 or less			
Drive system weight	kg	1.6			
Other inertia	kg·cm²	0.870			
Coefficient of friction		0.05			
Mechanical efficiency		0.8			
Ball screw length		Stroke + 200			
Dynamic allowable load	N	6567			
Static allowable moment	N·m	MP: 552, MY: 551, MR: 485			
Dynamic allowable moment	N·m	MP: 262.7, MY: 262.7, MR: 261.0			
Operating ambient temperature, humidity		0 to 40°C (no freezing) 35 to 80% RH (no condensation)			
Storage ambient temperature, humidity		-10 to 50°C (no freezing) 35 to 80% RH (no condensation)			
Atmosphere		No corrosive gas, explosive gas, or dust			

*1 The rated thrust and max. load capacity values are the allowable values for the actuator body; the actual thrust and load capacity are limited by the motor used.

Stroke and max. speed

(mm/s)

Stroke length / Screw lead	100 to 750	800	850	900	950	1050
5	250	225	200	175	150	125
10	500	450	400	350	300	250
16	800	720	640	560	480	400
20	1000	900	800	700	600	500

*The max. speed is the speed when the motor mounted by the customer can output a rotation speed of 3000 rpm.
The max. speed is restricted by the stroke. Do not move at speeds beyond the limit.

Allowable overhang length

*Refer to page 674 for details.

Moment direction

MP MY MR

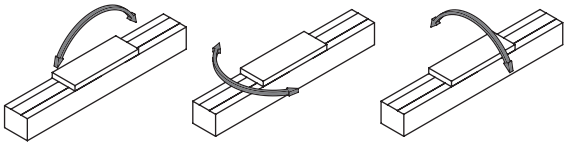

Dimensions Motor right-side mounting

● ECS-14-*****-R

· Refer to page 680 for grease nipple dimensions.

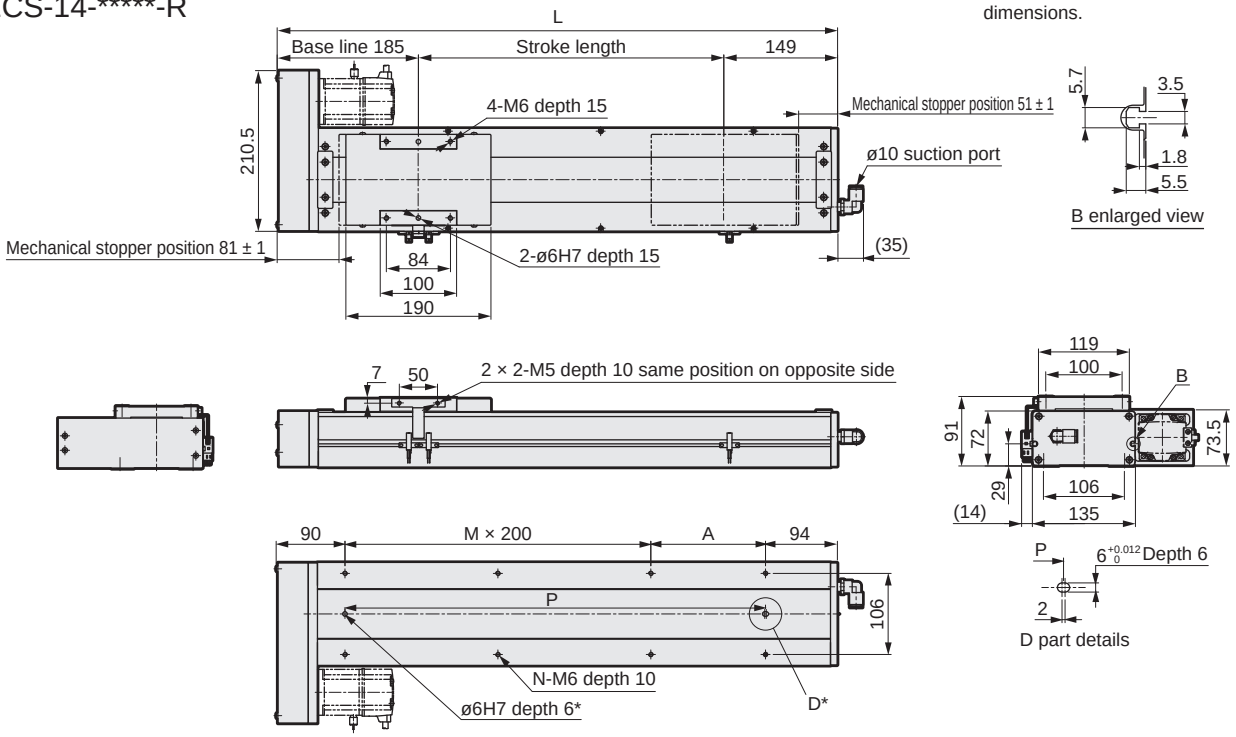

*Positioning pin hole (option)

Stroke length (mm)	50	100	150	200	250	300	350	400	450	500	550	600	650	700	750	800	850	900	950	1000	1050
L	384	434	484	534	584	634	684	734	784	834	884	934	984	1034	1084	1134	1184	1234	1284	1334	1384
A	200	50	100	150	200	50	100	150	200	50	100	150	200	50	100	150	200	50	100	150	200
M	0	1	1	1	1	2	2	2	2	3	3	3	3	4	4	4	4	5	5	5	5
N	4	6	6	6	6	8	8	8	8	10	10	10	10	12	12	12	12	14	14	14	14
P	200	250	300	350	400	450	500	550	600	650	700	750	800	850	900	950	1000	1050	1100	1150	1200
Weight (kg)	11.0	11.6	12.2	12.8	13.4	14.0	14.7	15.3	15.9	16.5	17.1	17.8	18.4	19.0	19.6	20.2	20.9	21.5	22.1	22.7	23.3

Motor mounting part

● ECS-14-R (□ 56)

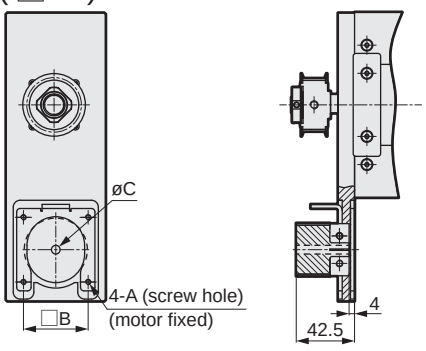

● ECS-14-R (□ 60)

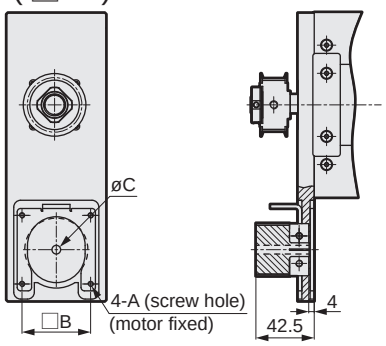

Mounted motor specification		A	B	C	Motor mounting bolt
A	□60	M4	50	10	4-M4 × L20
B	□56	M4	47.14	6.35	4-M4 × L20
C	□56	M4	47.14	8	4-M4 × L20

List of attachments

[Motor mounting parts]

Mounted motor specification	Timing belt, pulley	Fitting	Motor size	Motor mounting bolt	
				Size	Quantity
A	Included at shipment	Included at shipment	□56 □60	M4	4
B				M4	4
C				M4	4

*Refer to page 682 for fitting details.

[Origin sensor/Limit sensor]

Manufacturer	Model	Quantity
OMRON Corporation	EE-SX672	3

*Refer to page 678 for sensor specifications.

Dimensions Motor bottom mounting

● ECS-14-*****-D

· Refer to page 680 for grease nipple dimensions.

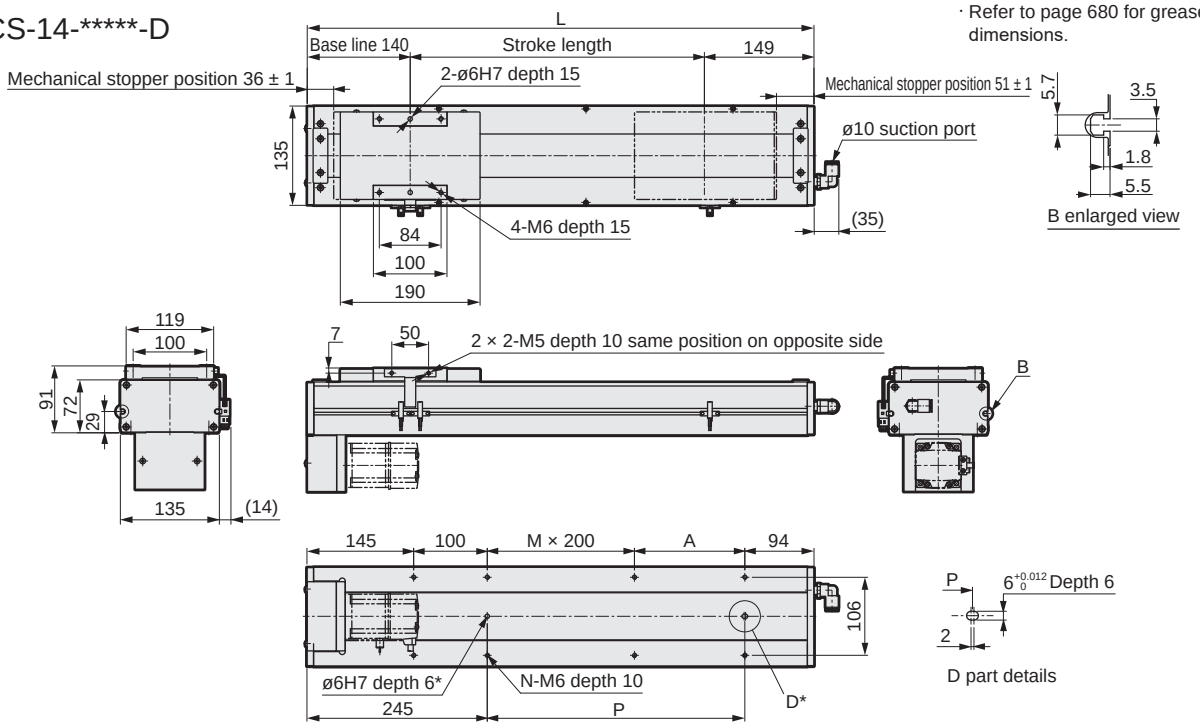

*Positioning pin hole (option)
Round positioning pin holes are available only for stroke 50.

Stroke length (mm)	50	100	150	200	250	300	350	400	450	500	550	600	650	700	750	800	850	900	950	1000	1050
L	339	389	439	489	539	589	639	689	739	789	839	889	939	989	1039	1089	1139	1189	1239	1289	1339
A	0	50	100	150	200	50	100	150	200	50	100	150	200	50	100	150	200	50	100	150	200
M	0	0	0	0	0	1	1	1	1	2	2	2	2	3	3	3	3	4	4	4	4
N	4	6	6	6	6	8	8	8	8	10	10	10	10	12	12	12	12	14	14	14	14
P	0	50	100	150	200	250	300	350	400	450	500	550	600	650	700	750	800	850	900	950	1000
Weight (kg)	11.0	11.6	12.2	12.8	13.4	14.0	14.7	15.3	15.9	16.5	17.1	17.8	18.4	19.0	19.6	20.2	20.9	21.5	22.1	22.7	23.3

Motor mounting part

● ECS-14-D (□ 56)

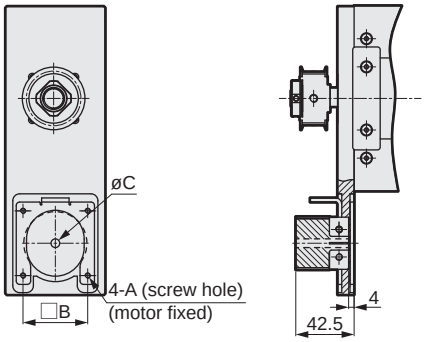

● ECS-14-D (□ 60)

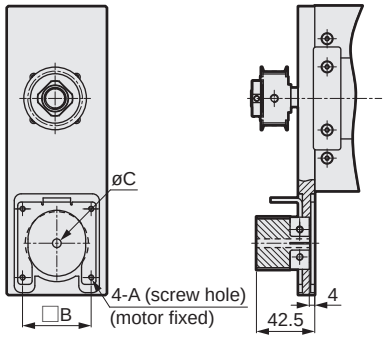

Mounted motor specification		A	B	C	Motor mounting bolt
A	□60	M4	50	10	4-M4 × L20
B	□56	M4	47.14	6.35	4-M4 × L20
C	□56	M4	47.14	8	4-M4 × L20

List of attachments

[Motor mounting parts]

Mounted motor specification	Timing belt, pulley	Fitting	Motor size	Motor mounting bolt	
				Size	Quantity
A	Included at shipment	Included at shipment	□56 □60	M4	4
B				M4	4
C				M4	4

*Refer to page 682 for fitting details.

[Origin sensor/Limit sensor]

Manufacturer	Model	Quantity
OMRON Corporation	EE-SX672	3

*Refer to page 678 for sensor specifications.

Dimensions Motor left-side mounting

● ECS-14-*****-L

· Refer to page 680 for grease nipple dimensions.

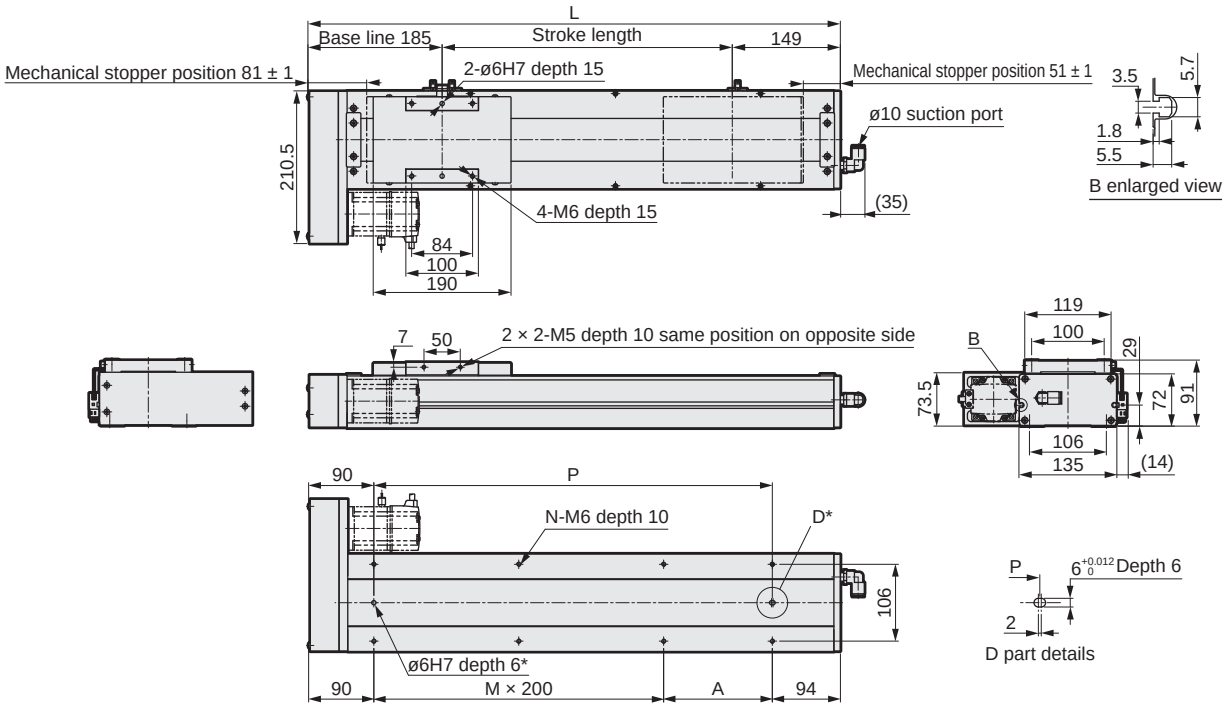

*Positioning pin hole (option)

Stroke length (mm)	50	100	150	200	250	300	350	400	450	500	550	600	650	700	750	800	850	900	950	1000	1050
L	384	434	484	534	584	634	684	734	784	834	884	934	984	1034	1084	1134	1184	1234	1284	1334	1384
A	200	50	100	150	200	50	100	150	200	50	100	150	200	50	100	150	200	50	100	150	200
M	0	1	1	1	1	2	2	2	2	3	3	3	3	4	4	4	4	5	5	5	5
N	4	6	6	6	6	8	8	8	8	10	10	10	10	12	12	12	12	14	14	14	14
P	200	250	300	350	400	450	500	550	600	650	700	750	800	850	900	950	1000	1050	1100	1150	1200
Weight (kg)	11.0	11.6	12.2	12.8	13.4	14.0	14.7	15.3	15.9	16.5	17.1	17.8	18.4	19.0	19.6	20.2	20.9	21.5	22.1	22.7	23.3

Motor mounting part

● ECS-14-L (□ 56)

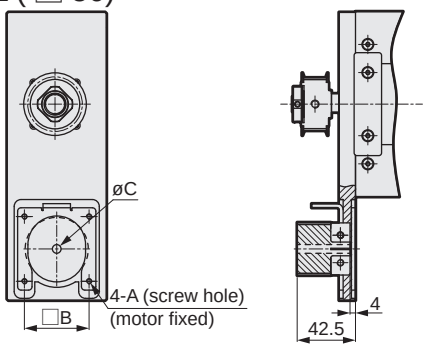

● ECS-14-L (□ 60)

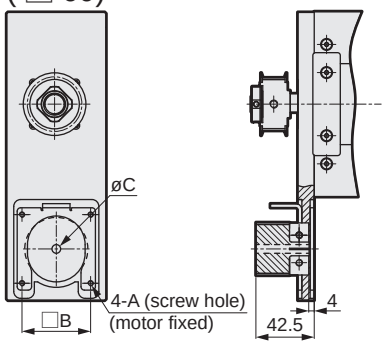

Mounted motor specification		A	B	C	Motor mounting bolt
A	□60	M4	50	10	4-M4 × L20
B	□56	M4	47.14	6.35	4-M4 × L20
C	□56	M4	47.14	8	4-M4 × L20

List of attachments

[Motor mounting parts]

Mounted motor specification	Timing belt, pulley	Fitting	Motor size	Motor mounting bolt	
				Size	Quantity
A	Included at shipment	Included at shipment	□56 □60	M4	4
B				M4	4
C				M4	4

*Refer to page 682 for fitting details.

[Origin sensor/Limit sensor]

Manufacturer	Model	Quantity
OMRON Corporation	EE-SX672	3

*Refer to page 678 for sensor specifications.

Model selection

STEP 1 Confirming load capacity

Load capacity varies with mounting orientation, screw lead and motor performance.
Refer to the selection table (page 638) and the specification table for each model to select the size and screw lead.
For motor performance, contact the motor manufacturer. For motor selection, use the actuator information (mechanical efficiency, etc.) in the specifications.

STEP 2 Confirming positioning time

Calculate the positioning time of the selected product according to the following example and confirm that the required tact is achievable.
Select the speed and acceleration/deceleration from the specification table for each model and the motor selected by the customer.

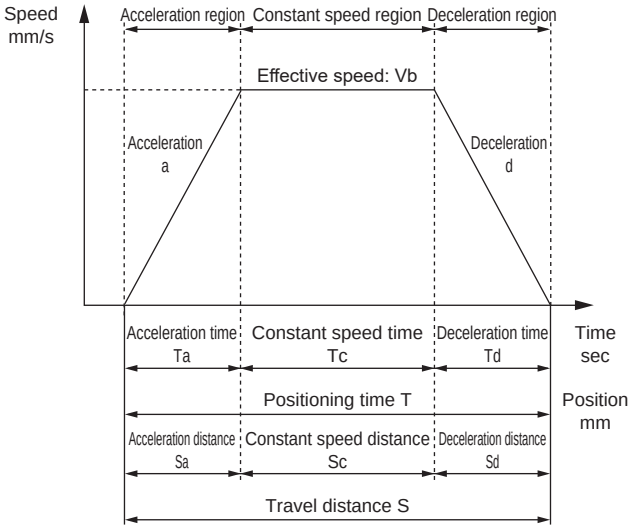

	Description	Code	Unit	Remarks
Set value	Set speed	V	mm/s	
	Set acceleration	a	mm/s^2	
	Set deceleration	d	mm/s^2	
	Travel distance	S	mm	
Calculated value	Achieved speed	Vmax	mm/s	$= \{2 \times a \times d \times S/(a + d)\}^{1/2}$
	Effective speed	Vb	mm/s	Smaller of V and Vmax
	Acceleration time	Ta	s	= Vb/a [0.2 sec or more]
	Deceleration time	Td	s	= Vb/d [0.2 sec or more]
	Constant speed time	Tc	s	= Sc/Vb
	Acceleration distance	Sa	mm	$= (a \times Ta^2)/2$
	Deceleration distance	Sd	mm	$= (d \times Td^2)/2$
	Constant speed distance	Sc	mm	= S - (Sa + Sd)
	Positioning time	T	s	= Ta + Tc + Td

*Do not use at speeds that exceed the specifications.
*The acceleration and deceleration settings related to the acceleration time and deceleration time change depending on the set speed and stroke.
*Depending on acceleration/deceleration and stroke length, the trapezoid speed waveform may not be formed (the set speed may not be achieved). In this case, select the effective speed (Vb) from the set speed (V) and the achieved speed (Vmax), whichever is smaller.
*Use with acceleration time/deceleration time of 0.2 sec or longer.
*1 G ≈ 9.8 m/s^2.
*Set the speed and acceleration/deceleration by the motor selected by the customer. For motor selection and calculation of speed and acceleration/deceleration, use the actuator information (mechanical efficiency, etc.) in the specifications.

STEP 3 Confirming allowable overhang length

Make sure that the load overhang length during operation is within the allowable range (pages 674 to 676).

Contact CKD for selection details.

MEMO

Allowable overhang length (ECS Series)

[When installed horizontally]

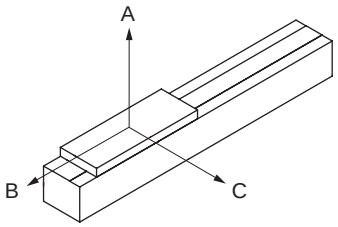

[Allowable overhang length]

● ECS-05

Motor mounted	Acceleration/deceleration time sec	Screw lead	Weight kg	Overhang mm		
				A	B	C
Straight / side/bottom	0.2	2	5	750	45	105
			10	350	20	47
		5	4	480	45	105
			7	300	25	55
		10	3	300	55	110
			5	180	30	65

● ECS-06

Motor mounted	Acceleration/deceleration time sec	Screw lead	Weight kg	Overhang mm		
				A	B	C
Straight / side/bottom	0.2	2	10	400	65	150
			30	150	15	40
		5	10	520	50	110
			30	130	10	25
		10	3	800	145	330
			8	280	50	120
			15	140	23	55

● ECS-10

Motor mounted	Acceleration/deceleration time sec	Screw lead	Weight kg	Overhang mm		
				A	B	C
Straight / side/bottom	0.2	5	30	560	50	50
			50	310	27	27
		10	15	440	90	90
			25	250	50	50
			30	200	40	40
		16	5	950	270	230
			10	480	130	110
			22	200	55	45
		20	5	750	250	200
			10	370	120	95
			15	240	80	60

● ECS-12

Motor mounted	Acceleration/deceleration time sec	Screw lead	Weight kg	Overhang mm		
				A	B	C
Straight / side/bottom	0.2	5	30	900	70	80
			50	420	30	40
		10	15	900	150	160
			25	490	80	85
			30	400	60	70
		16	5	1700	430	450
			10	800	200	220
			22	330	80	85
		20	5	1200	420	400
			10	580	200	190
			15	370	120	120

● ECS-14

Motor mounted	Acceleration/deceleration time sec	Screw lead	Weight kg	Overhang mm		
				A	B	C
Straight / side/bottom	0.2	5	60	2300	250	240
			80	1600	180	170
			95	1150	145	140
		10	30	2000	500	450
			50	1400	280	250
			75	1000	170	160
		16	10	2200	1200	1000
			20	1600	600	500
			44	800	260	220
		20	10	2300	1200	1000
			20	1400	600	500
			35	1000	330	290

*The above values are the allowable values for the actuator body; the actual load capacity is limited by the motor used.
*When suspending from above, use 1/3 of the dynamic allowable load, dynamic allowable moment, and overhang length.
Use overhang length up to the center of gravity of the load within A, B and C directions.

Allowable overhang length (ECS Series)

[When wall-mounted]

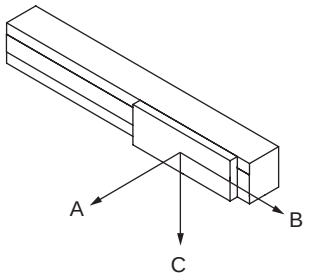

[Allowable overhang length]

● ECS-05

Motor mounted	Acceleration/deceleration time sec	Screw lead	Weight kg	Overhang mm		
				A	B	C
Straight / side/bottom	0.2	2	5	105	45	750
			10	47	20	350
		5	4	100	45	450
			7	55	23	240
		10	3	110	55	400
			5	60	30	230

● ECS-06

Motor mounted	Acceleration/deceleration time sec	Screw lead	Weight kg	Overhang mm		
				A	B	C
Straight / side/bottom	0.2	2	15	110	42	400
			30	45	15	180
		5	5	240	95	1150
			10	115	50	540
			30	25	10	140
		10	3	320	150	700
			8	110	50	250
			15	50	25	120

● ECS-10

Motor mounted	Acceleration/deceleration time sec	Screw lead	Weight kg	Overhang mm		
				A	B	C
Straight / side/bottom	0.2	5	10	160	160	1400
			20	75	75	650
			30	45	45	400
		10	10	130	140	690
			20	60	65	330
			30	40	40	210
		16	5	230	250	750
			10	110	120	370
			22	45	50	160
		20	5	220	250	650
			10	105	120	320
			15	65	75	210

● ECS-12

Motor mounted	Acceleration/deceleration time sec	Screw lead	Weight kg	Overhang mm		
				A	B	C
Straight / side/bottom	0.2	5	10	330	270	2200
			20	145	120	1000
			30	90	70	600
		10	10	260	240	850
			20	115	110	520
			30	70	60	300
		16	5	450	450	1300
			10	210	210	600
			22	80	80	240
		20	5	410	410	1200
			10	190	195	600
			15	120	120	390

● ECS-14

Motor mounted	Acceleration/deceleration time sec	Screw lead	Weight kg	Overhang mm		
				A	B	C
Straight / side/bottom	0.2	5	60	240	250	1600
			80	170	180	1200
			95	140	145	1050
		10	30	420	460	1500
			50	240	250	1000
			75	150	160	700
		16	10	1050	1200	2650
			20	500	620	1450
			44	230	270	800
		20	10	1000	1200	1900
			20	500	600	1000
			35	270	300	600

*The above values are the allowable values for the actuator body; the actual load capacity is limited by the motor used.
*When suspending from above, use 1/3 of the dynamic allowable load, dynamic allowable moment, and overhang length.
Use overhang length up to the center of gravity of the load within A, B and C directions.

Allowable overhang length (ECS Series)

[When installed vertically]

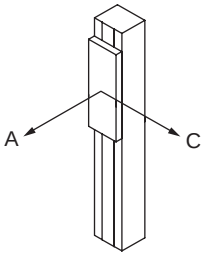

[Allowable overhang length]

● ECS-05

Motor mounted	Acceleration/deceleration time sec	Screw lead	Weight kg	Overhang mm A	Overhang mm C
Straight / side/bottom	0.2	2	3	80	80
			7	35	35
		5	3	65	65
		10	1.5	120	120

● ECS-06

Motor mounted	Acceleration/deceleration time sec	Screw lead	Weight kg	Overhang mm A	Overhang mm C
Straight / side/bottom	0.2	2	5	160	160
			15	53	53
		5	2	300	300
			4	150	150
			10	60	60
		10	1	410	410
			2	205	205
			5	82	82

● ECS-10

Motor mounted	Acceleration/deceleration time sec	Screw lead	Weight kg	Overhang mm A	Overhang mm C
Straight / side/bottom	0.2	5	5	310	310
			10	155	155
			12	130	130
		10	4	360	360
			6	240	240
			8	180	180
		16	1	1050	1050
			2	525	525
			5	210	210
		20	1	850	850
			2	425	425
			3	283	283

● ECS-12

Motor mounted	Acceleration/deceleration time sec	Screw lead	Weight kg	Overhang mm A	Overhang mm C
Straight / side/bottom	0.2	5	5	600	600
			10	300	300
			12	250	250
		10	4	650	650
			6	430	430
			8	320	320
		16	1	1050	1050
			2	525	525
			5	210	210
		20	3	650	700

● ECS-14

Motor mounted	Acceleration/deceleration time sec	Screw lead	Weight kg	Overhang mm A	Overhang mm C
Straight / side/bottom	0.2	5	20	755	755
			25	605	605
			27	560	560
		10	10	1350	1350
			15	900	900
			18	750	750
		16	2	2400	2400
			4	1700	1700
			7	1300	1300
		20	6	1200	1200

*The above values are the allowable values for the actuator body; the actual load capacity is limited by the motor used.
*When suspending from above, use 1/3 of the dynamic allowable load, dynamic allowable moment, and overhang length.
Use overhang length up to the center of gravity of the load within A, B and C directions.

MEMO

Origin sensor, limit sensor

	Manufacturer	Model
External mounted sensor	OMRON Corporation	EE-SX672
Internal mounted sensor	OMRON Corporation	EE-SX674

Performance

Item	Specifications
Hysteresis	0.025 mm or less
Light source (peak emission wavelength)	GaAs infrared LED (940 nm)
Indicator lamp	ON when receiving light (red)
Power supply voltage	5 to 24 VDC ±10% ripple (P-P) 10% or less
Current consumption	35 mA or less (NPN)
Control output	NPN: NPN open collector output 5 to 24 VDC 100 mA or less OFF state current 0.5 mA or less Residual voltage 0.8 V or less (at load current 100 mA) Residual voltage 0.4 V or less (at load current 40 mA)
Operating ambient illumination	Light-receiving surface luminance Fluorescent light: 1,000 lx or less
Ambient temperature range	When operating: -25 to +55°C When stored: -30 to +80°C (no condensation or freezing)
Ambient humidity range	When operating: 5 to 85% RH When stored: 5 to 95% RH (no condensation or freezing)
Degree of protection	IP50 IEC 60529 Standards
Cord length	2 m (Connector with cord [EE-1006 2M])

Output circuit

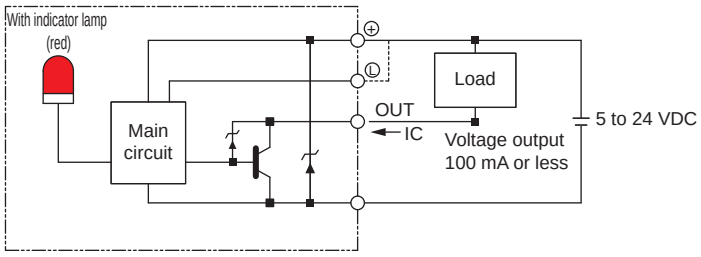

Wiring diagram

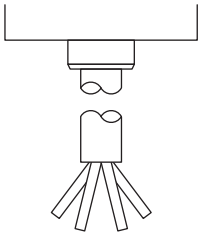

Terminal layout

Brown	5 to 24 VDC
Pink	L
Blue	0 V
Black	OUTPUT

Sensor dog dimensions

	Motor mounting direction
Body size	E/D/R/L
ECS-05	Fig. 1
ECS-06	Fig. 2

Fig. 1

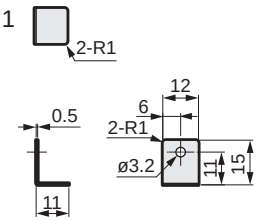

Fig. 2

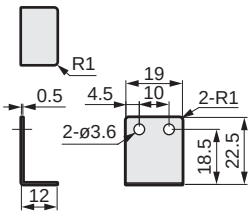

Body size	E/D	Motor mounting direction			
		R		L	
		Grease nipple None	Grease nipple Yes	Grease nipple None	Grease nipple Yes
ECS-10	Fig. 3	Fig. 3		Fig. 3	
ECS-12	Fig. 3	Fig. 3	Fig. 4	Fig. 3	Fig. 5

Body size	E/D	Motor mounting direction			
		R		L	
		Grease nipple None	Grease nipple Yes	Grease nipple None	Grease nipple Yes
ECS-14	Fig. 6	Fig. 6	Fig. 7	Fig. 6	Fig. 7

Fig. 3

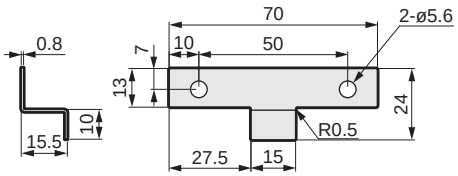

Fig. 4

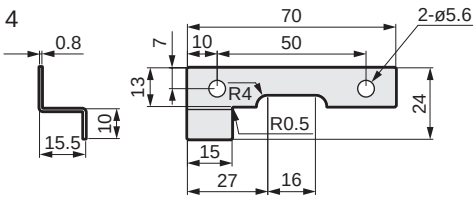

Fig. 5

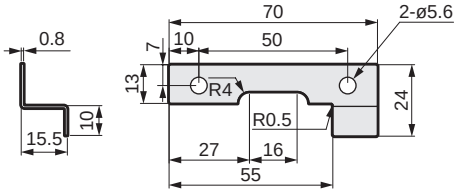

Fig. 6

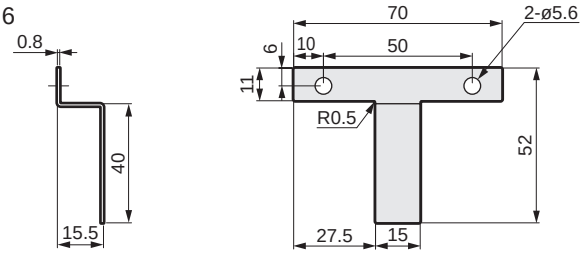

Fig. 7

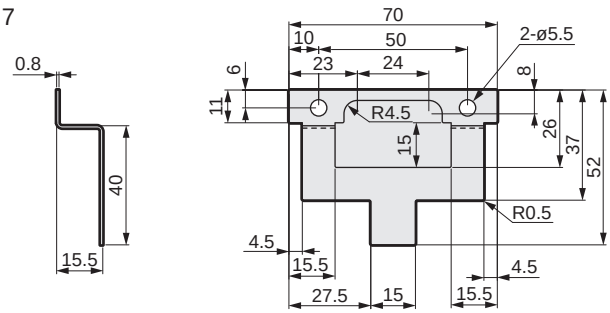

Grease nipple dimensions

*Horizontally symmetrical against the actuator.

ECS-10

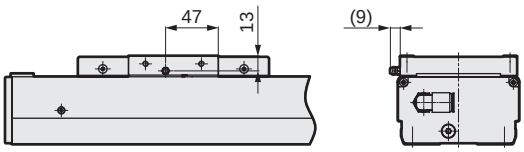

ECS-12

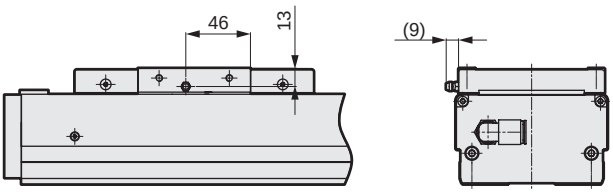

ECS-14

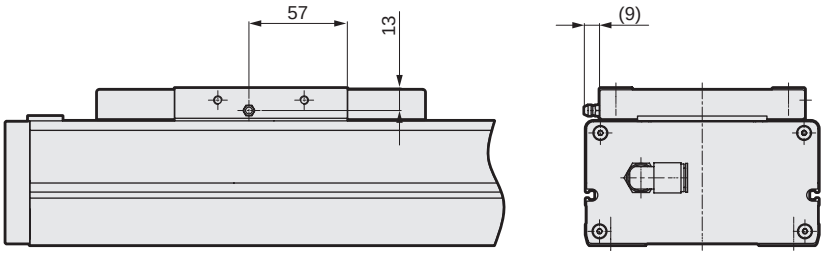

MEMO

List of attachments

Basic

Motor mounting bolt (common motor mounting direction)

Model No.	Mounted motor specification	Motor size	Size	Quantity
ECS-05 ECS-06	A	□42	M3	4
	B		M3	4
ECS-10 ECS-12 ECS-14	A	□56 □60	M4	4
	B		M4	4
	C		M4	4

By motor mounting direction

Model No.	Attachment name	Included quantity
E (external direct mounting)	Coupling (Assembled at shipment)	1
R (right-side mounting) L (left-side mounting) D (bottom mounting)	Timing belt	1
	Pulley	1

When origin/limit sensor is selected *1

Sensor mounting direction	Shipping format	Quantity
Inner sensor	Fixed position assembled at shipment	3 *2
Outer sensor	Included at shipment *3	

*1 Shipping format varies according to whether origin sensor and limit sensor are assembled inside or outside.
*2 When "None" is selected for origin sensor or limit sensor, the other sensor is also "None".
*3 Sensor mounting screws are also included.

Suction port fitting

Model No.	Fitting model No.	Shipping format	Quantity
ECS-05/ECS-06	GWL6-M5	Assembled at shipment	2
ECS-10 to ECS-14	GWL10-8	Included at shipment	1

Maintenance parts

● Maintenance parts (external mounted sensor)

Basic price model No. 	Compatibility	Part
ETS-22008-000001	All models	Body
ETS-22008-000006		Cable

Dust generation characteristics Reference data

Test circuit

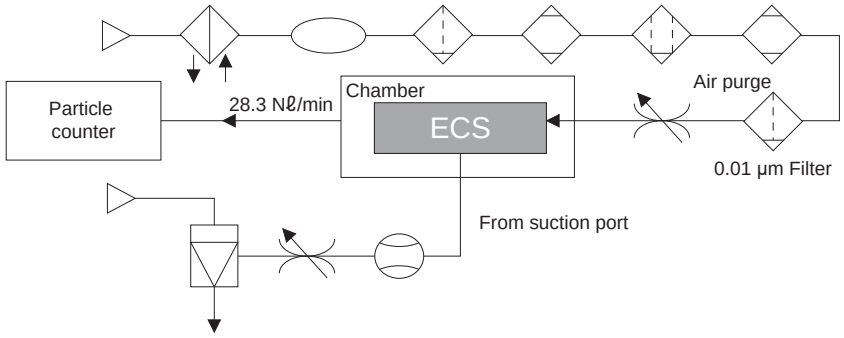

Measuring method

(1) Set a test sample in the acrylic resin chamber.

(2) Supply clean air at the same flow rate as the particle counter intake rate (28.3 Nℓ/min).

(3) Place the chamber in an ISO class 4 (class 10) clean bench.

(4) Activate the test sample, and measure changes in particle concentration over time during the specified measurement time.

(5) Test sample operating speed

Measuring conditions

Item		Description
Test sample	Model No.	Operating speed 400 mm/sec for ECS-06-10040
		Operating speed 800 mm/sec for ECS-14-20040
	Acceleration/deceleration time	0.3 sec
	Air intake	40.0 Nℓ/min for ECS-06-10040
		60.0 Nℓ/min for ECS-14-20040
Chamber	Internal capacity	28.3 Nℓ
Particle counter	Name	Laser dust monitor
	Min. measurable particle diameter	0.1 μm
	Intake	28.3 Nℓ/min
Setting conditions	Sampling	10 min
	Interval	40 min
	Measurement time	50 h

Dust generation data

The values in the data are measured values under the above conditions, and are not guaranteed.

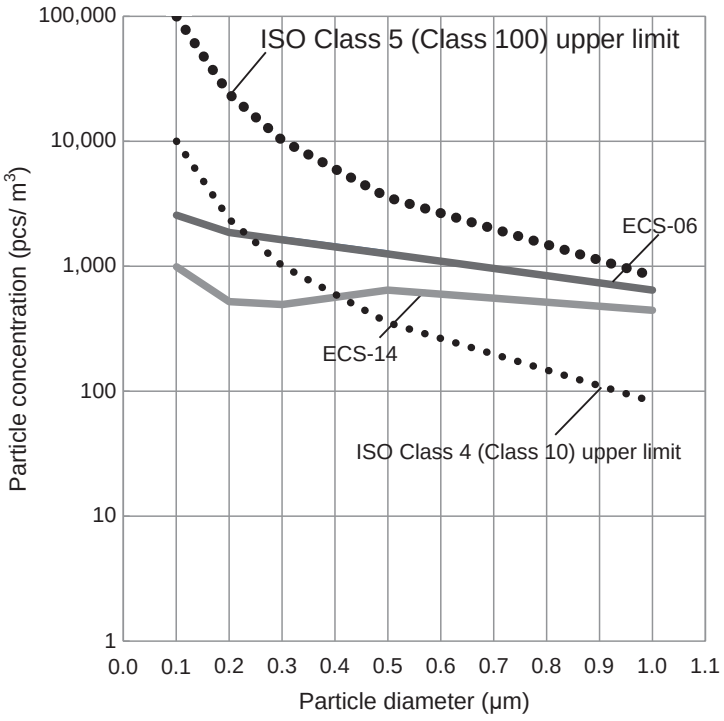

MEMO

Safety Precautions

Always read this section before use.

When designing equipment using electric actuators, the manufacturer is obligated to ensure that the safety of the mechanism and the electrically controlled system are secured.
It is important to select, use, handle and maintain CKD products appropriately to ensure their safe usage.
Observe warnings and precautions to ensure device safety.
Check that device safety is ensured and a safe device is manufactured.

WARNING

1 This product is designed and manufactured as a general industrial machine part.
It must be handled by an operator having sufficient knowledge and experience in handling.

2 Use the product within specifications range.

This product must be used within its stated specifications. It must not be modified or machined additionally.
This product is intended for use as a device or part for general-purpose industrial machinery. It is not intended for use outdoors (except for outdoor type) or for use under the following conditions or environment.
(Note that this product can be used under the following conditions only when CKD is consulted prior to use and the customer consents to CKD product specifications. The customer must provide safety measures to avoid risks in the event of problems.)

❶ Use for special applications which require the safety, including nuclear energy, railways, aircrafts, marine vessels, vehicles, medicinal devices, devices or applications coming into contact with beverages or foodstuffs, amusement devices, emergency operations (cutoff circuits, opening etc.) circuits, press machines, brake circuits, or safety devices or applications.

❷ Use for applications where life or assets could be adversely affected and special safety measures are required.

3 Observe organization standards and regulations, etc. related to the safety of device design.

4 Never remove devices before confirming safety.

❶ Inspect and service on the machine and devices after confirming safety of the entire system related to this product.

❷ Note that there may be hot or charged sections even after operation is stopped.

❸ When inspecting or maintaining device, be sure to shut down the power supply of the equipment and the relevant power supply, using caution to avoid electric shock.

5 Observe instruction manual and precautions attached the product surely to prevent accidents.

❶ The product could operate unexpectedly during teaching operation or trial operation. Be especially careful not to touch the actuator. If operating the product from a position where the shaft body cannot be seen, be sure to first confirm that the safety is secured even if the actuator moves.

6 Observe precautions to prevent electric shock.

❶ Do not touch the heat sink, cement friction, or motor inside the controller.
These will heat up, and could cause burns. Wait an appropriate amount of time prior to performing inspections or other tasks.
A high voltage is applied until the electrical load stored in the internal capacitors is discharged after the power is turned OFF.
Do not touch for around three minutes after the power OFF.

❷ Make sure to turn the switch on the controller power supply source OFF, before maintenances and inspections.
There is a danger of high voltage electric shocks.

❸ Do not attach or remove connector, while the power is on. Otherwise, this may cause malfunction, failure, or electric shock.

7 Install an overcurrent protector.

The wiring to the driver should be in accordance with JIS B 9960-1:2019 (IEC 60204-1:2016) Safety of Machinery - Electrical Equipment of Machines - Part 1: General Requirements. Install an overcurrent protector (a circuit breaker or circuit protector for wiring) on the main power, control power, and I/O power.

(Reference: JIS B 9960-1 7.2.1 General description)
If there is a possibility the circuit current may exceed the rated value of the component or the allowable current of the conductor, an overcurrent protection must be provided. The details of the ratings or set values to be selected shall be provided in 7.2.10.

8 Observe precautions below to prevent accidents.

■ The precautions are ranked as "DANGER", "WARNING" and "CAUTION" in this section.

DANGER: When a dangerous situation may occur if handling is mistaken leading to fatal or serious injuries, and when there is a high degree of emergency to a warning.

WARNING: When a dangerous situation may occur if handling is mistaken leading to fatal or serious injuries.

CAUTION: When a dangerous situation may occur if handling is mistaken leading to minor injuries or physical damage.

Note that some items described as "CAUTION" may lead to serious results depending on the situation.
Every item provides important information and must be observed.

Warranty

1 Warranty period

The product specified herein is warranted for one (1) year from the date of delivery to the location specified by the customer.

2 Warranty coverage

If the product specified herein fails for reasons attributable to CKD within the warranty period specified above, CKD will promptly provide a replacement for the faulty product or a part thereof or repair the faulty product at one of CKD's facilities free of charge.

However, following failures are excluded from this warranty:

1) Failure caused by handling or use of the product under conditions and in environments not conforming to those stated in the catalog, the Specifications, or the Instruction Manual.
2) Failure caused by use of the product exceeding its durability (cycles, distance, time, etc.) or caused by consumable parts.
3) Failure not caused by the product.
4) Failure caused by use not intended for the product.
5) Failure caused by modifications/alterations or repairs not carried out by CKD.
6) Failure caused by reasons unforeseen at the level of technology available at the time of delivery.
7) Failure caused by acts of nature and disasters beyond control of CKD.

The warranty stated herein covers only the delivered product itself. Any loss or damage induced by failure of the delivered product is excluded from this warranty.

Note: For details on the durability and consumable parts, contact your nearest CKD sales office.

3 Compatibility confirmation

The customer is responsible for confirming the compatibility of CKD products with the customer's systems, machines and equipment.

4 Range of service

The delivered product price does not include engineer dispatch service fees. Separate fees will be charged in the following cases.

(1) Instruction of installation and adjustment, and presence on test operation
(2) Maintenance and inspection, adjustment, and repair
(3) Technical instructions and technical education (operation, program, wiring method, safety education, etc.)

Precautions for export

Products and related technologies in this catalog
Those of the products and related technologies in this catalog which are subject to US Export Administration Regulations
(EAR) are marked on the product page as "Product subject to the EAR (EAR99) or (EAR99 and 3A991)".
For export or provision of products or related technologies subject to EAR regulations, we request that the US Export Administration Regulations (EAR) be observed appropriately.

Safety Precautions

Be sure to read this section before use.

Common Precautions: Electric actuator EBS-LE Series

Design/selection

DANGER

- Do not use in places with dangerous items subject to ignition, inflammation, explosion, etc.
  Otherwise, ignition, inflammation, or explosion may occur.
- Ensure that the product does not come into contact with water drops and oil drops.
  Otherwise, fire or malfunctions will occur.
- When mounting the product, be sure to hold and fix it (including the workpiece) securely.
  Failure to do so may lead to injury due to the product dropping, falling, malfunctioning, etc. Generally speaking, you should use all mounting holes when fixing the product.

WARNING

- Use this product in accordance with the specifications range.
- If there is a risk of bodily injury, install a protective cover.
  If the electric actuator's movable portions pose possible danger to the operator, be sure that the actuator has a structure preventing the operator from entering its operation range or touching the movable portions directly.
- Design the safety circuit or device so that damage to the equipment or human injury or do not occur if the machine stops during a system failure such as emergency stop or power outage.
- Mount indoors in a place with little moisture.
  When mounted in places where the product may be exposed to rainfall or with a significant amount of moisture (places with 80% or more humidity and condensation), electrical leakage or fire incidents may occur. Oil drops and oil mist are also prohibited. Use in such an environment could lead to damage or operation failure.
- Use D type grounding construction (grounding resistance 100 Ω or less) for the product.
  In the case of electrical leakage, electric shock or malfunction may occur.
- When using the actuator in an orientation other than horizontal, use a motor with brake.
  If used without a brake, injury or damage to workpieces may occur due to movable parts falling when the servo is OFF (including emergency stops and alarms) or when the power is OFF.
- When the actuator is installed in the vertical direction, ensure that the motor is as close to the top side as possible.
  If the motor is on the bottom side, there will be no issues during normal operation. However, when stopped for long periods, grease may separate and flow into the motor, which could sometimes lead to malfunctions.
- Do not use this product in places where sudden changes in the ambient temperature could lead to condensation.
- Install in a place that is not near direct sunlight, dust, or radiant heat, and where it will not be exposed to corrosive gas, explosive gas, flammable gas, or combustible materials. This product is also not made to be chemically resistant.
  Otherwise, explosion or inflammation may occur.
- Use and store in a place not subject to strong electromagnetic waves, ultraviolet, or radiation.
  Failure to do so may cause malfunction.
- Consider the possibility of power source failure.
  In case of a failure in the power source, take countermeasures so that trouble or damage will not come to the operator or equipment.
- Consider the operation status when restarting after emergency or abnormal stops.
  The machine must be designed so that reactivation causes no damage to the operator or equipment. If the electric actuator must be reset to the start position, be sure to provide the machine with a safe control device. Consider the possibility of failure in the mounted motor. In case of a failure in the power source, take countermeasures so that damage will not come to the operator or equipment.
- Do not operate in places where vibration and impact are common.
- Do not apply a load to the product that is greater than or equal to the allowable load listed in the materials for selection.
- Use and store in a state that maintains the operating/storage temperature and prevents condensation.
  (Storage temperature: −10 to +50°C, storage humidity: 35% to 80%, operating temperature: 0 to 40°C, operating humidity: 35% to 80%) Otherwise, abnormal stop or shortened service life of the product may occur. If heat accumulates, ventilate the product.

CAUTION

- Do not use in a range where the moving table could collide with the stroke end and break.
- Indicate the maintenance conditions in the device's instruction manual.
  The product's performance may drop too low to maintain an appropriate safety level depending on usage conditions, working environment and maintenance status. With correct maintenance, the product's functions can be used to the fullest.
- The products are manufactured in accordance with the specifications. Do not disassemble or modify the product.
- Refer to the instruction manual of the motor mounted to the product and control for your safety before wiring and designing.
- The customer is responsible for confirming the compatibility of CKD products and motors with the customer's systems, machines and equipment.
- Wire so that induction noise does not occur.
  Avoid locations with large currents and strong magnetic fields. Do not pipe or wire the product on the same power line as another large motor (via multi-conductor cable). Avoid piping or wiring on the same inverter power supply or wiring section used by a robot, etc. Apply a frame ground to the power supply and insert a filter to the output part.
- Do not use in an environment that can produce a magnetic field.
  This could cause malfunction.
- Separate the power supply of the product's output part from the power supply of inductive loads that produce surges, such as solenoid valves and relays.
  If the power supply is shared, the surge current may leak into the output part and lead to damage. If a separate power supply cannot be used, directly connect a surge absorption element for all inductive loads.
- When an external stopper or holding mechanism (brake, etc.) is installed, mount it so that origin position detection is not affected.
  When the power is ON, origin position detection occurs. If detection operations are obstructed by an external stopper or holding mechanism, an unexpected position may be recognized as the origin position.

Mounting, installation and adjustment

⚠ DANGER

- Do not enter the operational range of the product while the product is in operational state.
  The product may move unexpectedly and cause injury.
- Wire according to "JIS B 9960-1:2019 Safety of Machinery - Electrical Equipment of Machines - Part 1: General Requirements". Install overcurrent protection devices (circuit breaker for wiring, circuit protector, etc.) on the primary side of the power supply.
- Do not operate the unit with wet hands.
  This may lead to electric shock.

⚠ WARNING

- Precision parts are integrated to the product. Tilting, vibration, and impact during transportation are prohibited.
  It may cause failure in the parts.
- For temporary mounting, place horizontally.
- Do not place it on top of packages or place items on top of the product.
- Mount the product to non-combustible materials. If the product is mounted near or directly onto combustible materials, it may lead to fire.
  There is a risk of burns.
- Do not step onto the product, rest your feet on it, or place objects on it.
  This may result in falling, knocking the product over, injury due to falling, malfunctions due to product damage, etc.
- Take appropriate safeguards to that even if the power supply is damaged, injury will not come to the operator or the equipment.
  Otherwise, an unexpected incident may occur.
- If abnormal heat, smoke, or odor is generated, immediately turn OFF the product.
  Continuing to use the product as is may result in damage to the product or fire.
- If abnormal noise or significant vibration occurs, immediately halt operation.
  Continuing to use the product as is may result in damage to the product or abnormal operation.
- Wire the product properly, checking the instruction manual as you go to ensure there are no wiring mistakes or loose connectors. Also check wiring insulation.
  Contact with other circuits, ground faults, or defective insulators between terminals may cause overcurrent flow into the product or damage to the product. It could lead to abnormal operation or fire.
- Insulate wires that are not used.
  Misoperation, failure, or electric shock may occur.
- Do not damage the cable, apply excess stress to it, place heavy items on it, or fix it between two items.
  Otherwise, faulty conduction or electric shock may occur.
- During transportation, the ambient temperature should be −10 to +50°C, ambient humidity should be 35% to 80%, and there should be no freezing or condensation.
  It may cause failure in the product.

⚠ CAUTION

- Regarding installing, setting up, and/or adjusting the actuator, read through the instruction manual and operate correctly.
- When mounting the product, secure space for maintenance operations.
  If you do not secure the space, inspection and maintenance cannot be performed, which may cause the equipment to stop, or lead to damage or injury during work.
- During product transportation and mounting, provide adequate support with a lift or support tool, work with multiple operators, or take other measures to properly ensure operator safety.
- Do not install the product in a place subject to large vibrations or impacts.
  It may cause a malfunction.
- Do not operate the product using an external force, or perform operations that require rapid deceleration.
  Regenerated currents may cause misoperation or damage to the product.
- Do not come into contact with the mechanical stopper, etc. during origin return or mounting operation.
  This could lead in damage or faulty operation of the sending screw.
- Durability differs depending on the transport load, environment, etc. Set the transport load so that you have significant margin.
- Use the product so that the movable parts are not subject to impact.
- Do not operate the slider using excessive moment.
  It could lead to damage or misoperation of the product.
- Perform installation so that no torsion or bending force is applied to the product.
- When performing electric welding on the equipment to which the product is mounted, remove all F.G. (frame ground) connections from the product in advance.
  If you perform electric welding with the F.G. connections mounted, welding current, excessively high pressure during welding, or surge voltage may cause damage to the product.
- Do not disassemble or modify the product.
  It may result in injury, accidents, misoperation, or damage to the product.
- Do not bend the fixed cable repeatedly.
  When being repeatedly, use a movable cable.
- Fix the movable cable so that it does not move easily. When fixed, do not bend the cable at a sharp angle.
- During transportation or installation, do not hold the movable parts or cables of the product.
  Otherwise, injury or disconnection may occur.
- When carrying the product, hold the bottom side.
- Do not use in places subject to ultraviolet, or in atmospheres with corrosive gases or salt.
  Otherwise, reduced performance, abnormal operation, and rusting may result in high deterioration.

⚠ CAUTION

- Make the flatness of installation surface 0.05 mm/ 200 mm or less.
- Make the flatness of the workpiece side on which the slider is mounted 0.02 mm or less, and do not apply torsion or bending force to the product.
  It could lead to damage or misoperation of the product.
- Tighten the bolts to the body with an appropriate bolt tightening torque.

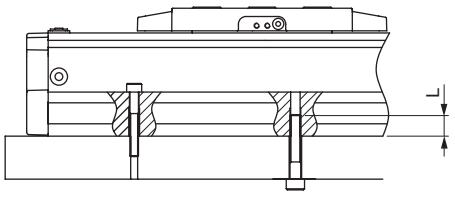

Item	(A) Mounting from the top		(B) Mounting from the bottom		
	Bolt used	Tightening torque (N·m)	Bolt used	Tightening torque (N·m)	Min. screw insertion depth L (mm)
EBS-04	M3 × 0.5	0.63	M4 × 0.7	1.5	6
EBS-05	M4 × 0.7	1.5	M5 × 0.8	3	7.5
EBS-08	M5 × 0.8	3	M6 × 1	5.2	9
EBS-12	M6 × 1	5.2	M8 × 1.25	12.5	12

Use/maintenance

⚠ DANGER

- Do not operate the unit with wet hands.
  This may lead to electric shock.

⚠ WARNING

- When performing maintenance, inspection, or repair, stop the power supply to the product in advance.
  Be aware of your surroundings so that a third party does not inadvertently turn the product ON.
- During power failure, turn OFF the product. When power is restored to the product, it may move suddenly and lead to accidents.
- Before supplying power to the product, confirm the safety of the operational range of the device.
  If you inadvertently supply power to the product, it may lead to electric shock or injury.
- Do not enter the operational range of the product while the product is in operational state.
  The product may move unexpectedly and cause injury.
- During operation and directly after stopping, do not touch the unit with you hands or body.
  It may lead to burns.
- Do not step onto the product, rest your feet on it, or place objects on it.
  This may result in falling, knocking the product over, injury due to falling, malfunctions due to product damage, product running out of control, etc.
- Take appropriate safeguards to that even if the power supply is damaged, injury will not come to the operator or the equipment.
  Otherwise, an unexpected incident may occur.
- When conducting operation with the actuator not visible, confirm before operation that safety is ensured even if the actuator moves.
- When setting the movable parts of the product by hand (direct teaching), do so after confirming that the servo is OFF.
- Do nor use the encoder with values lower than the min. resolution or the min. repeat positioning accuracy.
  It may not be possible to perform accurate positioning control.
- If there is abnormal operation in the timing belt, stop operation immediately and replace the timing belt. It can be particularly dangerous for the timing belt to come apart during vertical operation. Replace it as soon as possible.
  Confirm that there is no wear and tear to the teeth and sides of the timing belt, vertical splits in the teeth, cracks and weakening in the rear of the timing belt, or partial cutting.
- If abnormal heat, smoke, or odor is generated, immediately turn OFF the product.
  Continuing to use the product as is may result in damage to the product or fire.
- If abnormal noise or significant vibration occurs, immediately halt operation.
  Continuing to use the product as is may result in damage to the product or abnormal operation.

⚠ CAUTION

- Do not insert your fingers or other items into the opening of the product.
  Otherwise, damage to the product or human injury may result.
- Do not dent or scratch the movable parts.
  Failure to observe this could result in operation faults.
- During origin return operation, do not apply external force to the product.
  The origin may be detected incorrectly.
- Do not turn the servo OFF while gravity or inertia are applied.
  If the servo is turned OFF in these situations, the product may continue moving or fall. Perform servo OFF operations in balanced conditions so that no gravity or inertia are applied, or do so after confirming safety.

■ Do not send a stop directive during acceleration or deceleration.
It may lead to a change in speed (acceleration) or cause dangerous.

■ When performing operations that are accompanied by vibrations, change the set speed and use at a speed that will not incur vibrations.

■ Depending on your working conditions, certain operations may incur vibrations even during use within the operation speed range.

■ This product does not have a motor mounted.
The user must prepare, mount, and adjust the motor and driver. Refer to the instruction manual for details on mounting the motor, and perform mounting appropriately. Refer to the instruction manual of your motor for adjustment.

■ For slider products, especially when using with wall-hanging and suspension mounting, sag or deviation may occur in the steel belt. Continued use in these conditions may lead to the steel belt coming apart, or other malfunctions. Perform daily inspection, adjusting the steel belt in the event that you find sag or deviation.

■ The recommended servo motor has a gain adjustment function that reduces vibrations.
Perform gain adjustment and operate in controlled conditions with reduced vibration during operation and stopping. Operating in conditions that are subject to vibration or resonance may lead to shortened service life of the product.

■ Wiring and inspection should be performed by a professional.

■ Perform wiring after mounting the product.
This may lead to electric shock.

■ Wait at least 5 minutes after the power is OFF and confirm voltage with a tester or other tool before performing wiring or inspection.
This may lead to electric shock.

■ Do not wire or mount/remove connectors while power is ON.
Misoperation, failure, or electric shock may occur.

■ Use a lead wire that has a diameter allowing for significant instantaneous max. current for the power supply cable.
Otherwise, heat radiation or damage may occur during operation.

■ Do not disassemble or modify the product.
It may result in injury, accidents, misoperation, or damage to the product.

■ Ensure proper operation through periodic inspections (2 to 3 times a year).

■ Grease the product at 100 km intervals as a general guide.
Note that grease interval differs depending on the working conditions. It is recommended to determine the interval based on initial inspection. Refer to the instruction manual for details.

■ Wear protective glasses during greasing.
If grease flies into your eyes, it may cause inflammation.

■ When disposing of the product, do so in accordance with laws concerning waste disposal and cleaning, and hire a waste disposal professional.

Safety Precautions

Be sure to read this section before use.

Electric actuator EBR-LE Series

Design/selection

⚠ DANGER

- Do not use in places with dangerous items subject to ignition, inflammation, explosion, etc.
  Otherwise, ignition, inflammation, or explosion may occur.
- Ensure that the product does not come into contact with water drops and oil drops.
  Otherwise, fire or malfunctions will occur.
- When mounting the product, be sure to hold and fix it (including the workpiece) securely.
  Failure to do so may lead to injury due to the product dropping, falling, malfunctioning, etc. Generally speaking, you should use all mounting holes when fixing the product.

⚠ WARNING

- Use this product in accordance with the specifications range.
- If there is a risk of bodily injury, install a protective cover.
  If the electric actuator's movable portions pose possible danger to the operator, be sure that the actuator has a structure preventing the operator from entering its operation range or touching the movable portions directly.
- Design the safety circuit or device so that damage to the equipment or human injury or do not occur if the machine stops during a system failure such as emergency stop or power outage.
- Mount indoors in a place with little moisture.
  When mounted in places where the product may be exposed to rainfall or with a significant amount of moisture (places with 80% or more humidity and condensation), electrical leakage or fire incidents may occur. Oil drops and oil mist are also prohibited. Use in such an environment could lead to damage or operation failure.
- Use D type grounding construction (grounding resistance 100 Ω or less) for the product.
  In the case of electrical leakage, electric shock or malfunction may occur.
- When using the actuator in an orientation other than horizontal, use a motor with brake.
  If used without a brake, injury or damage to workpieces may occur due to movable parts falling when the servo is OFF (including emergency stops and alarms) or when the power is OFF.
- When the actuator is installed in the vertical direction, ensure that the motor is as close to the top side as possible.
  If the motor is on the bottom side, there will be no issues during normal operation. However, when stopped for long periods, grease may separate and flow into the motor, which could sometimes lead to malfunctions.
- Do not use this product in places where sudden changes in the ambient temperature could lead to condensation.
- Install in a place that is not near direct sunlight, dust, or radiant heat, and where it will not be exposed to corrosive gas, explosive gas, flammable gas, or combustible materials. This product is also not made to be chemically resistant.
  Otherwise, explosion or inflammation may occur.
- Use and store in a place not subject to strong electromagnetic waves, ultraviolet, or radiation.
  Failure to do so may cause malfunction.
- Consider the possibility of power source failure.
  In case of a failure in the power source, take countermeasures so that trouble or damage will not come to the operator or equipment.
- Consider the operation status when restarting after emergency or abnormal stops.
  The machine must be designed so that reactivation causes no damage to the operator or equipment. If the electric actuator must be reset to the start position, be sure to provide the machine with a safe control device. Consider the possibility of failure in the mounted motor. In case of a failure in the power source, take countermeasures so that damage will not come to the operator or equipment.
- Do not operate in places where vibration and impact are common.
- Do not apply a load to the product that is greater than or equal to the allowable load listed in the materials for selection.
- Use and store in a state that maintains the operating/storage temperature and prevents condensation.
  (Storage temperature: −10 to +50°C, storage humidity: 35% to 80%, operating temperature: 0 to 40°C, operating humidity: 35% to 80%) This could lead to abnormal stop or shortened service life. If heat accumulates, ventilate the product.

⚠ CAUTION

- Do not use in a range where the moving table could collide with the stroke end and break.
- Indicate the maintenance conditions in the device's instruction manual.
  The product's performance may drop too low to maintain an appropriate safety level depending on usage conditions, working environment and maintenance status. With correct maintenance, the product functions can be used to the fullest.
- The products are manufactured in accordance with the specifications. Do not disassemble or modify the product.
- Refer to the instruction manual of the motor mounted to the product and control for your safety before wiring and designing.
- The customer is responsible for confirming the compatibility of CKD products and motors with the customer's systems, machines and equipment.
- Wire so that induction noise does not occur.
  Avoid locations with large currents and strong magnetic fields. Do not pipe or wire the product on the same power line as another large motor (via multi-conductor cable). Avoid piping or wiring on the same inverter power supply or wiring section used by a robot, etc. Apply a frame ground to the power supply and insert a filter to the output part.
- Do not use in an environment that can produce a magnetic field.
  This could cause malfunction.
- Separate the power supply of the product's output part from the power supply of inductive loads that produce surges, such as solenoid valves and relays.
  If the power supply is shared, the surge current may leak into the output part and lead to damage. If a separate power supply cannot be used, directly connect a surge absorption element for all inductive loads.
- When an external stopper or holding mechanism (brake, etc.) is installed, mount it so that origin position detection is not affected.
  When the power is ON, origin position detection occurs. If detection operations are obstructed by an external stopper or holding mechanism, an unexpected position may be recognized as the origin position.

Mounting, installation and adjustment

⚠DANGER

- Do not enter the operational range of the product while the product is in operational state.
  The product may move unexpectedly and cause injury.
- Wire according to "JIS B 9960-1:2019 Safety of Machinery - Electrical Equipment of Machines - Part 1: General Requirements". Install overcurrent protection devices (circuit breaker for wiring, circuit protector, etc.) on the primary side of the power supply.
- Do not operate the unit with wet hands.
  This may lead to electric shock.

⚠WARNING

- Precision parts are integrated to the product. Tilting, vibration, and impact during transportation are prohibited.
  It may cause failure in the parts.
- For temporary mounting, place horizontally.
- Do not place it on top of packages or place items on top of the product.
- Mount the product to non-combustible materials. If the product is mounted near or directly onto combustible materials, it may lead to fire.
  There is a risk of burns.
- Do not step onto the product, rest your feet on it, or place objects on it.
  This may result in falling, knocking the product over, injury due to falling, malfunctions due to product damage, etc.
- Take appropriate safeguards to that even if the power supply is damaged, injury will not come to the operator or the equipment.
  Otherwise, an unexpected incident may occur.
- If abnormal heat, smoke, or odor is generated, immediately turn OFF the product.
  Continuing to use the product as is may result in damage to the product or fire.
- If abnormal noise or significant vibration occurs, immediately halt operation.
  Continuing to use the product as is may result in damage to the product or abnormal operation.
- Wire the product properly, checking the instruction manual as you go to ensure there are no wiring mistakes or loose connectors. Also check wiring insulation.
  Contact with other circuits, ground faults, or defective insulators between terminals may cause overcurrent flow into the product or damage to the product. It could lead to abnormal operation or fire.
- Insulate wires that are not used.
  Misoperation, failure, or electric shock may occur.
- Do not damage the cable, apply excess stress to it, place heavy items on it, or fix it between two items.
  Otherwise, faulty conduction or electric shock may occur.
- During transportation, the ambient temperature should be −10 to +50°C, ambient humidity should be 35% to 80%, and there should be no freezing or condensation.
  It may cause failure in the product.

⚠CAUTION

- Regarding installing, setting up, and/or adjusting the actuator, read through the instruction manual and operate correctly.
- When mounting the product, secure space for maintenance operations.
  If you do not secure the space, inspection and maintenance cannot be performed, which may cause the equipment to stop, or lead to damage or injury during work.
- During product transportation and mounting, provide adequate support with a lift or support tool, work with multiple operators, or take other measures to properly ensure operator safety.
- Do not install the product in a place subject to large vibrations or impacts.
  It may cause a malfunction.
- Do not operate the product using an external force, or perform operations that require rapid deceleration.
  Regenerated currents may cause misoperation or damage to the product.
- Do not come into contact with the mechanical stopper, etc. during origin return or mounting operation.
  This could lead in damage or faulty operation of the sending screw.
- Durability differs depending on the transport load, environment, etc. Set the transport load so that you have significant margin.
- Use the product so that the movable parts are not subject to impact.
- Do not operate the slider using excessive moment.
  It could lead to damage or misoperation of the product.
- Perform installation so that no torsion or bending force is applied to the product.
- When performing electric welding on the equipment to which the product is mounted, remove all F.G. (frame ground) connections from the product in advance.
  If you perform electric welding with the F.G. connections mounted, welding current, excessively high pressure during welding, or surge voltage may cause damage to the product.
- Do not disassemble or modify the product.
  It may result in injury, accidents, misoperation, or damage to the product.
- Do not bend the fixed cable repeatedly.
  When being repeatedly, use a movable cable.
- Fix the movable cable so that it does not move easily. When fixed, do not bend the cable at a sharp angle.
- During transportation or installation, do not hold the movable parts or cables of the product.
  Otherwise, injury or disconnection may occur.
- When carrying the product, hold the bottom side.
- Do not use in places subject to ultraviolet, or in atmospheres with corrosive gases or salt.
  Otherwise, reduced performance, abnormal operation, and rusting may result in high deterioration.

⚠ CAUTION

- Make the flatness of installation surface 0.05 mm/ 200 mm or less.
- Make the flatness of the workpiece side on which the slider is mounted 0.02 mm or less, and do not apply torsion or bending force to the product.
  It could lead to damage or misoperation of the product.
- Tighten the bolts to the body with an appropriate bolt tightening torque.

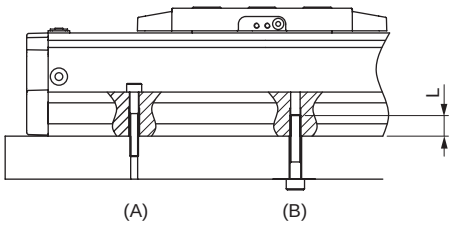

Item	(A) Mounting from the top		(B) Mounting from the bottom		
	Bolt used	Tightening torque (N·m)	Bolt used	Tightening torque (N·m)	Min. screw insertion depth L (mm)
EBR-04	M3 × 0.5	0.63	M4 × 0.7	1.5	6
EBR-05	M4 × 0.7	1.5	M5 × 0.8	3	7.5
EBR-08	M5 × 0.8	3	M6 × 1	5.2	9
EBR-12	M6 × 1	5.2	M8 × 1.25	12.5	12

Use/maintenance

⚠ DANGER

- Do not operate the unit with wet hands.
  This may lead to electric shock.

⚠ WARNING

- When performing maintenance, inspection, or repair, stop the power supply to the product in advance.
  Be aware of your surroundings so that a third party does not inadvertently turn the product ON.
- During power failure, turn OFF the product. When power is restored to the product, it may move suddenly and lead to accidents.
- Before supplying power to the product, confirm the safety of the operational range of the device.
  If you inadvertently supply power to the product, it may lead to electric shock or injury.
- Do not enter the operational range of the product while the product is in operational state.
  The product may move unexpectedly and cause injury.
- During operation and directly after stopping, do not touch the unit with you hands or body.
  It may lead to burns.
- Do not step onto the product, rest your feet on it, or place objects on it.
  This may result in falling, knocking the product over, injury due to falling, malfunctions due to product damage, product running out of control, etc.
- Take appropriate safeguards to that even if the power supply is damaged, injury will not come to the operator or the equipment.
  Otherwise, an unexpected incident may occur.
- When conducting operation with the actuator not visible, confirm before operation that safety is ensured even if the actuator moves.
- When setting the movable parts of the product by hand (direct teaching), do so after confirming that the servo is OFF.
- Do nor use the encoder with values lower than the min. resolution or the min. repeat positioning accuracy.
  It may not be possible to perform accurate positioning control.
- If there is abnormal operation in the timing belt, stop operation immediately and replace the timing belt. It can be particularly dangerous for the timing belt to come apart during vertical operation. Replace it as soon as possible.
  Confirm that there is no wear and tear to the teeth and sides of the timing belt, vertical splits in the teeth, cracks and weakening in the rear of the timing belt, or partial cutting.
- If abnormal heat, smoke, or odor is generated, immediately turn OFF the product.
  Continuing to use the product as is may result in damage to the product or fire.
- If abnormal noise or significant vibration occurs, immediately halt operation.
  Continuing to use the product as is may result in damage to the product or abnormal operation.

⚠ CAUTION

- Do not insert your fingers or other items into the opening of the product.
  Otherwise, damage to the product or human injury may result.
- Do not dent or scratch the movable parts.
  Failure to observe this could result in operation faults.
- During origin return operation, do not apply external force to the product.
  The origin may be detected incorrectly.
- Do not turn the servo OFF while gravity or inertia are applied.
  If the servo is turned OFF in these situations, the product may continue moving or fall. Perform servo OFF operations in balanced conditions so that no gravity or inertia are applied, or do so after confirming safety.
- Do not send a stop directive during acceleration or deceleration.
  It may lead to a change in speed (acceleration) or cause dangerous.
- When performing operations that are accompanied by vibrations, change the set speed and use at a speed that will not incur vibrations.

- Depending on your working conditions, certain operations may incur vibrations even during use within the operation speed range.

- This product does not have a motor mounted.
  The user must prepare, mount, and adjust the motor and driver. Refer to the instruction manual for details on mounting the motor, and perform mounting appropriately. Refer to the instruction manual of your motor for adjustment.

- For slider products, especially when using with wall-hanging and suspension mounting, sag or deviation may occur in the steel belt. Continued use in these conditions may lead to the steel belt coming apart, or other malfunctions. Perform daily inspection, adjusting the steel belt in the event that you find sag or deviation.

- The recommended servo motor has a gain adjustment function that reduces vibrations.
  Perform gain adjustment and operate in controlled conditions with reduced vibration during operation and stopping. Operating in conditions that are subject to vibration or resonance may lead to shortened service life of the product.

- Wiring and inspection should be performed by a professional.

- Perform wiring after mounting the product.
  This may lead to electric shock.

- Wait at least 5 minutes after the power is OFF and confirm voltage with a tester or other tool before performing wiring or inspection.
  This may lead to electric shock.

- Do not wire or mount/remove connectors while power is ON.
  Misoperation, failure, or electric shock may occur.

- Use a lead wire that has a diameter allowing for significant instantaneous max. current for the power supply cable.
  Otherwise, heat radiation or damage may occur during operation.

- Do not disassemble or modify the product.
  It may result in injury, accidents, misoperation, or damage to the product.

- Ensure proper operation through periodic inspections (2 to 3 times a year).

- Grease the product at 100 km intervals as a general guide.
  Note that grease interval differs depending on the working conditions. It is recommended to determine the interval based on initial inspection. Refer to the instruction manual for details.

- Wear protective glasses during greasing.
  If grease flies into your eyes, it may cause inflammation.

- When disposing of the product, do so in accordance with laws concerning waste disposal and cleaning, and hire a waste disposal professional.

Safety Precautions

Be sure to read this section before use.

Electric actuator ETS Series

Design/selection

⚠ DANGER

- Do not use in places with dangerous items subject to ignition, inflammation, explosion, etc. Otherwise, ignition, inflammation, or explosion may occur.
- Ensure that the product does not come into contact with water drops and oil drops. Otherwise, fire or malfunctions will occur.
- When mounting the product, be sure to hold and fix it (including the workpiece) securely.
  Failure to do so may lead to injury due to the product dropping, falling, malfunctioning, etc.

⚠ WARNING

- Use this product in accordance with the specifications range.
- If there is a risk of bodily injury, install a protective cover.
  - If the electric actuator's movable portions pose possible danger to the operator, be sure that the actuator has a structure preventing the operator from entering its operation range or touching the movable portions directly.
- Design the safety circuit or device so that damage to the equipment or human injury or do not occur if the machine stops during a system failure such as emergency stop or power outage.
- Mount indoors in a place with little moisture.
  When mounted in places where the product may be exposed to rainfall or with a significant amount of moisture (places with 85% or more humidity and condensation), electrical leakage or fire incidents may occur. Oil drops and oil mist are also prohibited.
  - Use in such an environment could lead to damage or operation failure.
- Use and store in a state that maintains the operating/storage temperature and prevents condensation.
  (Storage temperature: −10 to +50°C, storage humidity: 35% to 80%, operating temperature: 0 to 40°C, operating humidity: 35% to 80%) This could lead to abnormal stop or shortened service life. If heat accumulates, ventilate the product.
- Install in a place that is not near direct sunlight, dust, or radiant heat, and where it will not be exposed to corrosive gas, explosive gas, flammable gas, or combustible materials. This product is also not made to be chemically resistant.
  Otherwise, explosion or inflammation may occur.
- Use and store in a place not subject to strong electromagnetic waves, ultraviolet, or radiation.
  Failure to do so may cause malfunction.
- Consider the possibility of power source failure.
  - In case of a failure in the power source, take countermeasures without causing trouble or damage to the operator or equipment.
- Consider the operation status when restarting after emergency or abnormal stops.
  - The machine must be designed so that reactivation causes no damage to the operator or equipment. If the electric actuator must be reset to the start position, be sure to provide the machine with a safe control device. Consider the possibility of failure in the mounted motor. In case of a failure in the power source, take countermeasures so that damage will not come to the operator or equipment.
- Do not operate in places where vibration and impact are common.
- Do not apply a load to the product that is greater than or equal to the allowable load listed in the materials for selection.

⚠ CAUTION

- Do not use in a range where the moving table could collide with the stroke end and break.
- Indicate the maintenance conditions in the device's instruction manual.
  - The product's performance may drop too low to maintain an appropriate safety level depending on usage conditions, working environment and maintenance status. With correct maintenance, the product functions can be used to the fullest.
- Regarding installing, setting up, and/or adjusting the actuator, read through the instruction manual and operate correctly.
- The products are manufactured in accordance with the specifications. Do not disassemble or modify the product.
- Refer to the instruction manual of the motor mounted to the product and control for your safety before wiring and designing.
- The customer is responsible for confirming the compatibility of CKD products with the customer's systems, machines and equipment.

Mounting, installation and adjustment

⚠ DANGER

- Do not enter the operational range of the product while the product is in operational state. The product may move unexpectedly and cause injury.

⚠ WARNING

- Precision parts are integrated to the product. Tilting, vibration, and impact during transportation are prohibited.
  It may cause failure in the parts.
- For temporary mounting, place horizontally.
- Do not place it on top of packages or place items on top of the product.
- During transportation, the ambient temperature should be −10 to +50°C, ambient humidity should be 35% to 80%, and there should be no freezing or condensation.
  It may cause failure in the product.
- Mount the product to non-combustible materials. If the product is mounted near or directly onto combustible materials, it may lead to fire.
  There is a risk of burns.
- Do not step onto the product, rest your feet on it, or place objects on it.
  This may result in falling, knocking the product over, injury due to falling, malfunctions due to product damage, etc.
- Take appropriate safeguards to that even if the power supply is damaged, injury will not come to the operator or the equipment.
  Otherwise, an unexpected incident may occur.
- In the case of any abnormalities, stop use immediately and contact the CKD sales office nearest you.

⚠ CAUTION

- Do not install the product in a place subject to large vibrations or impacts.
  It may cause a malfunction.
- Do not operate the product using an external force, or perform operations that require rapid deceleration.
  Regenerated currents may cause misoperation or damage to the product.
- Mount the sensor so as not to interfere with the sensor dog and the grease nipple.
- Do not come into contact with the mechanical stopper, etc. during origin return or mounting operation.
  This could lead in damage or faulty operation of the sending screw.
- Durability differs depending on the transport load, environment, etc. Set the transport load so that you have significant margin. Also, do not use in ways that apply impact to the movable parts.
- Do not operate the slider using excessive moment.
  It could lead to damage or misoperation of the product.
- Make the flatness of installation surface 0.05 mm/200 mm or less.
- Perform installation so that no torsion or bending force is applied to the product.
- Make the flatness of the workpiece side on which the slider is mounted 0.02 mm or less, and do not apply torsion or bending force to the product.
  It could lead to damage or misoperation of the product.
- Tighten the bolts to the body with an appropriate torque in accordance with the following table.

Bolt size	Tightening torque (N·m)
M3	0.7
M4	1.5
M5	3
M6	5.2
M8	12.5
M10	24.5

Use/maintenance

⚠ DANGER

- Do not operate the unit with wet hands.
  This may lead to electric shock.

⚠ CAUTION

- Regularly inspect the product at least two or three times a year to check that it operates correctly.
- Grease the product at 100 km intervals as a general guide. Note that grease interval differs depending on the working conditions. It is recommended to determine the interval based on initial inspection. Refer to the instruction manual for details.
- When performing maintenance, inspection, or repair, stop the power supply to the product in advance. Be aware of your surroundings so that a third party does not inadvertently turn the product on or operate it.
- When disposing of the product, do so in accordance with laws concerning waste disposal and cleaning, and hire a waste disposal professional.

Safety Precautions

Be sure to read this section before use.

Electric actuator ECS Series

Design/selection

⚠ DANGER

- Do not use in places with dangerous items subject to ignition, inflammation, explosion, etc. Otherwise, ignition, inflammation, or explosion may occur.
- Ensure that the product does not come into contact with water drops and oil drops. Otherwise, fire or malfunctions will occur.
- When mounting the product, be sure to hold and fix it (including the workpiece) securely.
  Failure to do so may lead to injury due to the product dropping, falling, malfunctioning, etc.

⚠ WARNING

- Use this product in accordance with the specifications range.
- If there is a risk of bodily injury, install a protective cover.
  - If the electric actuator's movable portions pose possible danger to the operator, be sure that the actuator has a structure preventing the operator from entering its operation range or touching the movable portions directly.
- Design the safety circuit or device so that damage to the equipment or human injury or do not occur if the machine stops during a system failure such as emergency stop or power outage.
- Mount indoors in a place with little moisture.
  When mounted in places where the product may be exposed to rainfall or with a significant amount of moisture (places with 85% or more humidity and condensation), electrical leakage or fire incidents may occur. Oil drops and oil mist are also prohibited.
  - Use in such an environment could lead to damage or operation failure.
- Use and store in a state that maintains the operating/storage temperature and prevents condensation.
  (Storage temperature: −10 to +50°C, storage humidity: 35% to 80%, operating temperature: 0 to 40°C, operating humidity: 35% to 80%) This could lead to abnormal stop or shortened service life. If heat accumulates, ventilate the product.
- Install in a place that is not near direct sunlight, dust, or radiant heat, and where it will not be exposed to corrosive gas, explosive gas, flammable gas, or combustible materials. This product is also not made to be chemically resistant.
  Otherwise, explosion or inflammation may occur.
- Use and store in a place not subject to strong electromagnetic waves, ultraviolet, or radiation.
  Failure to do so may cause malfunction.
- Consider the possibility of power source failure.
  - In case of a failure in the power source, take countermeasures without causing trouble or damage to the operator or equipment.
- Consider the operation status when restarting after emergency or abnormal stops.
  - The machine must be designed so that reactivation causes no damage to the operator or equipment. If the electric actuator must be reset to the start position, be sure to provide the machine with a safe control device. Consider the possibility of failure in the mounted motor. In case of a failure in the power source, take countermeasures so that damage will not come to the operator or equipment.
- Do not operate in places where vibration and impact are common.
- Do not apply a load to the product that is greater than or equal to the allowable load listed in the materials for selection.

⚠ CAUTION

- Do not use in a range where the moving table could collide with the stroke end and break.
- For information regarding installing, setting up, adjustment, and maintenance, read through the instruction manual and operate correctly.
- Indicate the maintenance conditions in the device's instruction manual.
  - The product's performance may drop too low to maintain an appropriate safety level depending on usage conditions, working environment and maintenance status. With correct maintenance, the product functions can be used to the fullest.
- The products are manufactured in accordance with the specifications. Do not disassemble or modify the product.
- Refer to the instruction manual of the motor mounted to the product and control for your safety before wiring and designing.
- The customer is responsible for confirming the compatibility of CKD products with the customer's systems, machines and equipment.
- Do not pressurize from the suction hole. It may cause lubrication grease to jump or shorten the service life of the product.
- The amount of air intake for the product differs depending on the model. Use the correct air intake amount for your model.

ECS-05	ECS-06	ECS-10	ECS-12	ECS-14	ECS-17	ECS-22
30 Nℓ/min or less	40 Nℓ/min or less	50 Nℓ/min or less	50 Nℓ/min or less	60 Nℓ/min or less	80 Nℓ/min or less	100 Nℓ/min or less

Mounting, installation and adjustment

⚠ DANGER

- Do not enter the operational range of the product while the product is in operational state. The product may move unexpectedly and cause injury.

⚠ WARNING

- Precision parts are integrated to the product. Tilting, vibration, and impact during transportation are prohibited.
  It may cause failure in the parts.
- For temporary mounting, place horizontally.
- Do not place it on top of packages or place items on top of the product.
- During transportation, the ambient temperature should be −10 to +50°C, ambient humidity should be 35% to 80%, and there should be no freezing or condensation.
  It may cause failure in the product.
- Mount the product to non-combustible materials. If the product is mounted near or directly onto combustible materials, it may lead to fire.
  There is a risk of burns.
- Do not step onto the product, rest your feet on it, or place objects on it.
  This may result in falling, knocking the product over, injury due to falling, malfunctions due to product damage, etc.
- Take appropriate safeguards to that even if the power supply is damaged, injury will not come to the operator or the equipment.
  Otherwise, an unexpected incident may occur.
- In the case of any abnormalities, stop use immediately and contact the CKD sales office nearest you.

⚠ CAUTION

- Do not install the product in a place subject to large vibrations or impacts.
  It may cause a malfunction.
- Do not operate the product using an external force, or perform operations that require rapid deceleration.
  Regenerated currents may cause misoperation or damage to the product.
- Mount the sensor so as not to interfere with the sensor dog and the grease nipple.
- Do not come into contact with the mechanical stopper, etc. during origin return or mounting operation.
  This could lead in damage or faulty operation of the sending screw.
- Durability differs depending on the transport load, environment, etc. Set the transport load so that you have significant margin. Also, do not use in ways that apply impact to the movable parts.
- Do not operate the slider using excessive moment.
  It could lead to damage or misoperation of the product.
- Make the flatness of installation surface 0.05 mm/200 mm or less.
- Perform installation so that no torsion or bending force is applied to the product.
- Make the flatness of the workpiece side on which the slider is mounted 0.02 mm or less, and do not apply torsion or bending force to the product.
  It could lead to damage or misoperation of the product.
- Tighten the bolts to the body with an appropriate torque in accordance with the following table.

Bolt size	Tightening torque (N·m)
M3	0.7
M4	1.5
M5	3
M6	5.2
M8	12.5
M10	24.5

Use/maintenance

⚠ DANGER

- Do not operate the unit with wet hands.
  This may lead to electric shock.

⚠ CAUTION

- Regularly inspect the product at least two or three times a year to check that it operates correctly.
- Grease the product at 100 km intervals as a general guide. Note that grease interval differs depending on the working conditions. It is recommended to determine the interval based on initial inspection. Refer to the instruction manual for details.
- When performing maintenance, inspection, or repair, stop the power supply to the product in advance. Be aware of your surroundings so that a third party does not inadvertently turn the product on or operate it.
- When disposing of the product, do so in accordance with laws concerning waste disposal and cleaning, and hire a waste disposal professional.

Safety Precautions

Be sure to read this section before use.

Electric actuator ETV Series

Design/selection

⚠ DANGER

- Do not use in places with dangerous items subject to ignition, inflammation, explosion, etc. Otherwise, ignition, inflammation, or explosion may occur.
- Ensure that the product does not come into contact with water drops and oil drops. Otherwise, fire or malfunctions will occur.
- When mounting the product, be sure to hold and fix it (including the workpiece) securely.
  Failure to do so may lead to injury due to the product dropping, falling, malfunctioning, etc.

⚠ WARNING

- Use this product in accordance with the specifications range.
- If there is a risk of bodily injury, install a protective cover.
  - If the electric actuator's movable portions pose possible danger to the operator, be sure that the actuator has a structure preventing the operator from entering its operation range or touching the movable portions directly.
- Design the safety circuit or device so that damage to the equipment or human injury or do not occur if the machine stops during a system failure such as emergency stop or power outage.
- Mount indoors in a place with little moisture.
  When mounted in places where the product may be exposed to rainfall or with a significant amount of moisture (places with 85% or more humidity and condensation), electrical leakage or fire incidents may occur. Oil drops and oil mist are also prohibited.
  - Use in such an environment could lead to damage or operation failure.
- Use and store in a state that maintains the operating/storage temperature and prevents condensation.
  (Storage temperature: −10 to +50°C, storage humidity: 35% to 80%, operating temperature: 0 to 40°C, operating humidity: 35% to 80%) This could lead to abnormal stop or shortened service life. If heat accumulates, ventilate the product.
- Install in a place that is not near direct sunlight, dust, or radiant heat, and where it will not be exposed to corrosive gas, explosive gas, flammable gas, or combustible materials. This product is also not made to be chemically resistant.
  Otherwise, explosion or inflammation may occur.
- Use and store in a place not subject to strong electromagnetic waves, ultraviolet, or radiation.
  Failure to do so may cause malfunction.
- Consider the possibility of power source failure.
  - In case of a failure in the power source, take countermeasures without causing trouble or damage to the operator or equipment.
- Consider the operation status when restarting after emergency or abnormal stops.
  - The machine must be designed so that reactivation causes no damage to the operator or equipment. If the electric actuator must be reset to the start position, be sure to provide the machine with a safe control device. Consider the possibility of failure in the mounted motor. In case of a failure in the power source, take countermeasures so that damage will not come to the operator or equipment.
- Do not operate in places where vibration and impact are common.
- Do not apply a load to the product that is greater than or equal to the allowable load listed in the materials for selection.

⚠ CAUTION

- Do not use in a range where the moving table could collide with the stroke end and break.
- Indicate the maintenance conditions in the device's instruction manual.
  - The product's performance may drop too low to maintain an appropriate safety level depending on usage conditions, working environment and maintenance status. With correct maintenance, the product functions can be used to the fullest.
- For information regarding installing, setting up, adjustment, and maintenance, read through the instruction manual and operate correctly.
- The products are manufactured in accordance with the specifications. Do not disassemble or modify the product.
- Refer to the instruction manual of the motor mounted to the product and control for your safety before wiring and designing.
- The customer is responsible for confirming the compatibility of CKD products with the customer's systems, machines and equipment.

Mounting, installation and adjustment

⚠ DANGER

- Do not enter the operational range of the product while the product is in operational state. The product may move unexpectedly and cause injury.

⚠ WARNING

- Precision parts are integrated to the product. Tilting, vibration, and impact during transportation are prohibited.
  It may cause failure in the parts.
- For temporary mounting, place horizontally.
- Do not place it on top of packages or place items on top of the product.
- During transportation, the ambient temperature should be −10 to +50°C, ambient humidity should be 35% to 80%, and there should be no freezing or condensation.
  It may cause failure in the product.
- Mount the product to non-combustible materials. If the product is mounted near or directly onto combustible materials, it may lead to fire.
  There is a risk of burns.
- Do not step onto the product, rest your feet on it, or place objects on it.
  This may result in falling, knocking the product over, injury due to falling, malfunctions due to product damage, etc.
- Take appropriate safeguards to that even if the power supply is damaged, injury will not come to the operator or the equipment.
  Otherwise, an unexpected incident may occur.
- In the case of any abnormalities, stop use immediately and contact the CKD sales office nearest you.

⚠ CAUTION

- Do not install the product in a place subject to large vibrations or impacts.
  It may cause a malfunction.
- Do not operate the product using an external force, or perform operations that require rapid deceleration.
  Regenerated currents may cause misoperation or damage to the product.
- Mount the sensor so as not to interfere with the sensor dog and the grease nipple.
- Do not come into contact with the mechanical stopper, etc. during origin return or mounting operation.
  This could lead in damage or faulty operation of the sending screw.
- Durability differs depending on the transport load, environment, etc. Set the transport load so that you have significant margin. Also, do not use in ways that apply impact to the movable parts.
- Do not operate the slider using excessive moment.
  It could lead to damage or misoperation of the product.
- Do not move the slider before mounting the motor to the product. It may lead to early damage of the product's internal belt through breakage, bending, creasing, or wear.
- Make the flatness of installation surface 0.05 mm/200 mm or less.
- Perform installation so that no torsion or bending force is applied to the product.
- Make the flatness of the workpiece side on which the slider is mounted 0.02 mm or less, and do not apply torsion or bending force to the product.
  It could lead to damage or misoperation of the product.
- Tighten the bolts to the body with an appropriate torque in accordance with the following table.

Bolt size	Tightening torque (N·m)
M3	0.7
M4	1.5
M5	3
M6	5.2
M8	12.5
M10	24.5

Use/maintenance

⚠ DANGER

- Do not operate the unit with wet hands.
  This may lead to electric shock.
- If there is wear and tear to the teeth and sides of the belt, vertical splits in the teeth, cracks and weakening in the rear of the belt, partial cutting, or other abnormalities in the belt, immediately halt operation. The working environment or working conditions may be inappropriate.

⚠ CAUTION

- Regularly inspect the product at least two or three times a year to check that it operates correctly.
- Properly maintain the tensile force of the belt. For initial use in particular, precaution against looseness (slack) is required. Inappropriate tensile force may lead to a shortened service life or tooth skipping due to increased vibration and noise.
- Grease the product at 100 km intervals as a general guide. Note that grease interval differs depending on the working conditions. It is recommended to determine the interval based on initial inspection. Refer to the instruction manual for details.
- When performing maintenance, inspection, or repair, stop the power supply to the product in advance. Be aware of your surroundings so that a third party does not inadvertently turn the product on or operate it.
- When disposing of the product, do so in accordance with laws concerning waste disposal and cleaning, and hire a waste disposal professional.

Safety Precautions

Be sure to read this section before use.

Electric actuator ECV Series

Design/selection

DANGER

- Do not use in places with dangerous items subject to ignition, inflammation, explosion, etc.
  Otherwise, ignition, inflammation, or explosion may occur.
- Ensure that the product does not come into contact with water drops and oil drops. Otherwise, fire or malfunctions will occur.
- When mounting the product, be sure to hold and fix it (including the workpiece) securely.
  Failure to do so may lead to injury due to the product dropping, falling, malfunctioning, etc.

WARNING

- Use this product in accordance with the specifications range.
- If there is a risk of bodily injury, install a protective cover.
  - If the electric actuator's movable portions pose possible danger to the operator, be sure that the actuator has a structure preventing the operator from entering its operation range or touching the movable portions directly.
- Design the safety circuit or device so that damage to the equipment or human injury or do not occur if the machine stops during a system failure such as emergency stop or power outage.
- Mount indoors in a place with little moisture.
  When mounted in places where the product may be exposed to rainfall or with a significant amount of moisture (places with 85% or more humidity and condensation), electrical leakage or fire incidents may occur. Oil drops and oil mist are also prohibited.
  - Use in such an environment could lead to damage or operation failure.
- Use and store in a state that maintains the operating/storage temperature and prevents condensation.
  (Storage temperature: −10 to +50°C, storage humidity: 35% to 80%, operating temperature: 0 to 40°C, operating humidity: 35% to 80%) This could lead to abnormal stop or shortened service life. If heat accumulates, ventilate the product.
- Install in a place that is not near direct sunlight, dust, or radiant heat, and where it will not be exposed to corrosive gas, explosive gas, flammable gas, or combustible materials. This product is also not made to be chemically resistant.
  Otherwise, explosion or inflammation may occur.
- Use and store in a place not subject to strong electromagnetic waves, ultraviolet, or radiation.
  Failure to do so may cause malfunction.
- Consider the possibility of power source failure.
  - In case of a failure in the power source, take countermeasures without causing trouble or damage to the operator or equipment.
- Consider the operation status when restarting after emergency or abnormal stops.
  - The machine must be designed so that reactivation causes no damage to the operator or equipment.
    If the electric actuator must be reset to the start position, be sure to provide the machine with a safe control device.
    Consider the possibility of failure in the mounted motor.
    In case of a failure in the power source, take countermeasures so that damage will not come to the operator or equipment.
- Do not operate in places where vibration and impact are common.
- Do not apply a load to the product that is greater than or equal to the allowable load listed in the materials for selection.

CAUTION

- Do not use in a range where the moving table could collide with the stroke end and break.
- Indicate the maintenance conditions in the device's instruction manual.
  - The product's performance may drop too low to maintain an appropriate safety level depending on usage conditions, working environment and maintenance status. With correct maintenance, the product functions can be used to the fullest.
- For information regarding installing, setting up, adjustment, and maintenance, read through the instruction manual and operate correctly.
- The products are manufactured in accordance with the specifications. Do not disassemble or modify the product.
- Refer to the instruction manual of the motor mounted to the product and control for your safety before wiring and designing.
- The customer is responsible for confirming the compatibility of CKD products with the customer's systems, machines and equipment.
- Do not pressurize from the suction hole. It may cause lubrication grease to jump or shorten the service life of the product.
- The amount of air intake for the product differs depending on the model. Use the correct air intake amount for your model.

ECV-05	ECV-06	ECV-10	ECV-14	ECV-17	ECV-22
30 Nℓ/min or less	40 Nℓ/min or less	50 Nℓ/min or less	60 Nℓ/min or less	80 Nℓ/min or less	100 Nℓ/min or less

Mounting, installation and adjustment

⚠ DANGER

- Do not enter the operational range of the product while the product is in operational state. The product may move unexpectedly and cause injury.

⚠ WARNING

- Precision parts are integrated to the product. Tilting, vibration, and impact during transportation are prohibited.
  It may cause failure in the parts.
- For temporary mounting, place horizontally.
- Do not place it on top of packages or place items on top of the product.
- During transportation, the ambient temperature should be −10 to +50°C, ambient humidity should be 35% to 80%, and there should be no freezing or condensation.
  It may cause failure in the product.
- Mount the product to non-combustible materials. If the product is mounted near or directly onto combustible materials, it may lead to fire.
  There is a risk of burns.
- Do not step onto the product, rest your feet on it, or place objects on it.
  This may result in falling, knocking the product over, injury due to falling, malfunctions due to product damage, etc.
- Take appropriate safeguards to that even if the power supply is damaged, injury will not come to the operator or the equipment.
  Otherwise, an unexpected incident may occur.
- In the case of any abnormalities, stop use immediately and contact the CKD sales office nearest you.

⚠ CAUTION

- Do not install the product in a place subject to large vibrations or impacts.
  It may cause a malfunction.
- Do not operate the product using an external force, or perform operations that require rapid deceleration.
  Regenerated currents may cause misoperation or damage to the product.
- Mount the sensor so as not to interfere with the sensor dog and the grease nipple.
- Do not come into contact with the mechanical stopper, etc. during origin return or mounting operation.
  This could lead in damage or faulty operation of the sending screw.
- Durability differs depending on the transport load, environment, etc. Set the transport load so that you have significant margin. Also, do not use in ways that apply impact to the movable parts.
- Do not operate the slider using excessive moment.
  It could lead to damage or misoperation of the product.
- Do not move the slider before mounting the motor to the product. It may lead to early damage of the product's internal belt through breakage, bending, creasing, or wear.
- Make the flatness of installation surface 0.05 mm/200 mm or less.
- Perform installation so that no torsion or bending force is applied to the product.
- Make the flatness of the workpiece side on which the slider is mounted 0.02 mm or less, and do not apply torsion or bending force to the product.
  It could lead to damage or misoperation of the product.
- Tighten the bolts to the body with an appropriate torque in accordance with the following table.

Bolt size	Tightening torque (N·m)
M3	0.7
M4	1.5
M5	3
M6	5.2
M8	12.5
M10	24.5

Use/maintenance

⚠ DANGER

- Do not operate the unit with wet hands.
  This may lead to electric shock.
- If there is wear and tear to the teeth and sides of the belt, vertical splits in the teeth, cracks and weakening in the rear of the belt, partial cutting, or other abnormalities in the belt, immediately halt operation. The working environment or working conditions may be inappropriate.

⚠ CAUTION

- Regularly inspect the product at least two or three times a year to check that it operates correctly.
- Properly maintain the tensile force of the belt. For initial use in particular, precaution against looseness (slack) is required. Inappropriate tensile force may lead to a shortened service life or tooth skipping due to increased vibration and noise.
- Grease the product at 100 km intervals as a general guide. Note that grease interval differs depending on the working conditions. It is recommended to determine the interval based on initial inspection. Refer to the instruction manual for details.
- When performing maintenance, inspection, or repair, stop the power supply to the product in advance. Be aware of your surroundings so that a third party does not inadvertently turn the product on or operate it.
- When disposing of the product, do so in accordance with laws concerning waste disposal and cleaning, and hire a waste disposal professional.

Safety Precautions

Be sure to read this section before use.

Electric actuator EKS-L Series

Design/selection

DANGER

- Do not use in places with dangerous items subject to ignition, inflammation, explosion, etc.
  Otherwise, ignition, inflammation, or explosion may occur.
- Ensure that the product does not come into contact with water drops and oil drops.
  Otherwise, fire or malfunctions will occur.
- When mounting the product, be sure to hold and fix it (including the workpiece) securely.
  Failure to do so may lead to injury due to the product dropping, falling, malfunctioning, etc. Generally speaking, you should use all mounting holes when fixing the product.

WARNING

- Use this product in accordance with the specifications range.
- If there is a risk of bodily injury, install a protective cover.
  If the electric actuator's movable portions pose possible danger to the operator, be sure that the actuator has a structure preventing the operator from entering its operation range or touching the movable portions directly.
- Design the safety circuit or device so that damage to the equipment or human injury or do not occur if the machine stops during a system failure such as emergency stop or power outage.
- Mount indoors in a place with little moisture.
  When mounted in places where the product may be exposed to rainfall or with a significant amount of moisture (places with 80% or more humidity and condensation), electrical leakage or fire incidents may occur. Oil drops and oil mist are also prohibited. Use in such an environment could lead to damage or operation failure.
- Use D type grounding construction (grounding resistance 100 Ω or less) for the product.
  In the case of electrical leakage, electric shock or malfunction may occur.
- When using the actuator in an orientation other than horizontal, use a motor with brake.
  If used without a brake, injury or damage to workpieces may occur due to movable parts falling when the servo is OFF (including emergency stops and alarms) or when the power is OFF.
- When the actuator is installed in the vertical direction, ensure that the motor is as close to the top side as possible.
  If the motor is on the bottom side, there will be no issues during normal operation. However, when stopped for long periods, grease may separate and flow into the motor, which could sometimes lead to malfunctions.
- Do not use this product in places where sudden changes in the ambient temperature could lead to condensation.
- Install in a place that is not near direct sunlight, dust, or radiant heat, and where it will not be exposed to corrosive gas, explosive gas, flammable gas, or combustible materials. This product is also not made to be chemically resistant.
  Otherwise, explosion or inflammation may occur.
- Use and store in a place not subject to strong electromagnetic waves, ultraviolet, or radiation.
  Failure to do so may cause malfunction.
- Consider the possibility of power source failure.
  In case of a failure in the power source, take countermeasures so that trouble or damage will not come to the operator or equipment.
- Consider the operation status when restarting after emergency or abnormal stops.
  The machine must be designed so that reactivation causes no damage to the operator or equipment. If the electric actuator must be reset to the start position, be sure to provide the machine with a safe control device. Consider the possibility of failure in the mounted motor. In case of a failure in the power source, take countermeasures so that damage will not come to the operator or equipment.
- Do not operate in places where vibration and impact are common.
- Do not apply a load to the product that is greater than or equal to the allowable load listed in the materials for selection.
- Use and store in a state that maintains the operating/storage temperature and prevents condensation.
  (Storage temperature: 0 to 40°C, storage humidity: 20% to 80%, operating temperature: 0 to 40°C, operating humidity: 20% to 80%) This could lead to abnormal stop or shortened service life. If heat accumulates, ventilate the product.

CAUTION

- Do not use in a range where the moving table could collide with the stroke end and break.
- Indicate the maintenance conditions in the device's instruction manual.
  The product's performance may drop too low to maintain an appropriate safety level depending on usage conditions, working environment and maintenance status. With correct maintenance, the product functions can be used to the fullest.
- The products are manufactured in accordance with the specifications. Do not disassemble or modify the product.
- Refer to the instruction manual of the motor mounted to the product and control for your safety before wiring and designing.
- The customer is responsible for confirming the compatibility of CKD products and motors with the customer's systems, machines and equipment.
- Wire so that induction noise does not occur.
  Avoid locations with large currents and strong magnetic fields. Do not pipe or wire the product on the same power line as another large motor (via multi-conductor cable). Avoid piping or wiring on the same inverter power supply or wiring section used by a robot, etc. Apply a frame ground to the power supply and insert a filter to the output part.
- Do not use in an environment that can produce a magnetic field.
  This could cause malfunction.
- Separate the power supply of the product's output part from the power supply of inductive loads that produce surges, such as solenoid valves and relays.
  If the power supply is shared, the surge current may leak into the output part and lead to damage. If a separate power supply cannot be used, directly connect a surge absorption element for all inductive loads.
- When an external stopper or holding mechanism (brake, etc.) is installed, mount it so that origin position detection is not affected.
  When the power is ON, origin position detection occurs. If detection operations are obstructed by an external stopper or holding mechanism, an unexpected position may be recognized as the origin position.

Mounting, installation and adjustment

⚠ DANGER

- Do not enter the operational range of the product while the product is in operational state.
  The product may move unexpectedly and cause injury.
- Wire according to "JIS B 9960-1:2008 Safety of Machinery - Electrical Equipment of Machines - Part 1: General Requirements". Install overcurrent protection devices (circuit breaker for wiring, circuit protector, etc.) on the primary side of the power supply.
- Do not operate the unit with wet hands.
  This may lead to electric shock.

⚠ WARNING

- Precision parts are integrated to the product. Tilting, vibration, and impact during transportation are prohibited.
  It may cause failure in the parts.
- For temporary mounting, place horizontally.
- Do not place it on top of packages or place items on top of the product.
- Mount the product to non-combustible materials. If the product is mounted near or directly onto combustible materials, it may lead to fire.
  There is a risk of burns.
- Do not step onto the product, rest your feet on it, or place objects on it.
  This may result in falling, knocking the product over, injury due to falling, malfunctions due to product damage, etc.
- Take appropriate safeguards to that even if the power supply is damaged, injury will not come to the operator or the equipment.
  Otherwise, an unexpected incident may occur.
- If abnormal heat, smoke, or odor is generated, immediately turn OFF the product.
  Continuing to use the product as is may result in damage to the product or fire.
- If abnormal noise or significant vibration occurs, immediately halt operation.
  Continuing to use the product as is may result in damage to the product or abnormal operation.
- Wire the product properly, checking the instruction manual as you go to ensure there are no wiring mistakes or loose connectors. Also check wiring insulation.
  Contact with other circuits, ground faults, or defective insulators between terminals may cause overcurrent flow into the product or damage to the product. It could lead to abnormal operation or fire.
- Insulate wires that are not used.
  Misoperation, failure, or electric shock may occur.
- Do not damage the cable, apply excess stress to it, place heavy items on it, or fix it between two items.
  Otherwise, faulty conduction or electric shock may occur.
- During transportation, the ambient temperature should be 0 to 40°C, ambient humidity should be 20% to 80%, and there should be no freezing or condensation.
  It may cause failure in the product.

⚠ CAUTION

- Regarding installing, setting up, and/or adjusting the actuator, read through the instruction manual and operate correctly.
- When mounting the product, secure space for maintenance operations.
  If you do not secure the space, inspection and maintenance cannot be performed, which may cause the equipment to stop, or lead to damage or injury during work.
- During product transportation and mounting, provide adequate support with a lift or support tool, work with multiple operators, or take other measures to properly ensure operator safety.
- Do not install the product in a place subject to large vibrations or impacts.
  It may cause a malfunction.
- Do not operate the product using an external force, or perform operations that require rapid deceleration.
  Regenerated currents may cause misoperation or damage to the product.
- Do not come into contact with the mechanical stopper, etc. during origin return or mounting operation.
  This could lead in damage or faulty operation of the sending screw.
- Durability differs depending on the transport load, environment, etc. Set the transport load so that you have significant margin.
- Use the product so that the movable parts are not subject to impact.
- Do not operate the slider using excessive moment.
  It could lead to damage or misoperation of the product.
- Perform installation so that no torsion or bending force is applied to the product.
- When performing electric welding on the equipment to which the product is mounted, remove all F.G. (frame ground) connections from the product in advance.
  If you perform electric welding with the F.G. connections mounted, welding current, excessively high pressure during welding, or surge voltage may cause damage to the product.
- Do not disassemble or modify the product.
  It may result in injury, accidents, misoperation, or damage to the product.
- Do not bend the fixed cable repeatedly.
  When being repeatedly, use a movable cable.
- Fix the movable cable so that it does not move easily. When fixed, do not bend the cable at a sharp angle.
- During transportation or installation, do not hold the movable parts or cables of the product.
  Otherwise, injury or disconnection may occur.
- When carrying the product, hold the bottom side.
- Do not use in places subject to ultraviolet, or in atmospheres with corrosive gases or salt.
  Otherwise, reduced performance, abnormal operation, and rusting may result in high deterioration.

⚠ CAUTION

- Install the actuator on a a machined side or a flat side with correct accuracy.
- Mount it to a base with a significant amount of rigidity.
- Tighten the bolts to the body with an appropriate bolt tightening torque.
  Refer to the instruction manual for tightening torque values.
- When carrying the product, hold the bottom side. Note that EKS-08 and EKS-10 are heavy products (20 kg or more). Use multiple operators for operation when required.

Use/maintenance

⚠ DANGER

- Do not operate the unit with wet hands.
  This may lead to electric shock.

⚠ WARNING

- When performing maintenance, inspection, or repair, stop the power supply to the product in advance.
  Be aware of your surroundings so that a third party does not inadvertently turn the product ON.
- During power failure, turn OFF the product. When power is restored to the product, it may move suddenly and lead to accidents.
- Before supplying power to the product, confirm the safety of the operational range of the device.
  If you inadvertently supply power to the product, it may lead to electric shock or injury.
- Do not enter the operational range of the product while the product is in operational state.
  The product may move unexpectedly and cause injury.
- During operation and directly after stopping, do not touch the unit with you hands or body.
  It may lead to burns.
- Do not step onto the product, rest your feet on it, or place objects on it.
  This may result in falling, knocking the product over, injury due to falling, malfunctions due to product damage, product running out of control, etc.
- Take appropriate safeguards to that even if the power supply is damaged, injury will not come to the operator or the equipment.
  Otherwise, an unexpected incident may occur.
- When conducting operation with the actuator not visible, confirm before operation that safety is ensured even if the actuator moves.
- When setting the movable parts of the product by hand (direct teaching), do so after confirming that the servo is OFF.
- Do nor use the encoder with values lower than the min. resolution or the min. repeat positioning accuracy.
  It may not be possible to perform accurate positioning control.
- If there is abnormal operation in the timing belt, stop operation immediately and replace the timing belt. It can be particularly dangerous for the timing belt to come apart during vertical operation. Replace it as soon as possible.
  Confirm that there is no wear and tear to the teeth and sides of the timing belt, vertical splits in the teeth, cracks and weakening in the rear of the timing belt, or partial cutting.
- If abnormal heat, smoke, or odor is generated, immediately turn OFF the product.
  Continuing to use the product as is may result in damage to the product or fire.
- If abnormal noise or significant vibration occurs, immediately halt operation.
  Continuing to use the product as is may result in damage to the product or abnormal operation.

⚠ CAUTION

- Set the acceleration/deceleration during operation to 2 G or less.
- Do not insert your fingers or other items into the opening of the product.
  Otherwise, damage to the product or human injury may result.
- Do not dent or scratch the movable parts.
  Failure to observe this could result in operation faults.
- During origin return operation, do not apply external force to the product.
  The origin may be detected incorrectly.
- Do not turn the servo OFF while gravity or inertia are applied.
  If the servo is turned OFF in these situations, the product may continue moving or fall. Perform servo OFF operations in balanced conditions so that no gravity or inertia are applied, or do so after confirming safety.
- Do not send a stop directive during acceleration or deceleration.
  It may lead to a change in speed (acceleration) or cause dangerous.
- When performing operations that are accompanied by vibrations, change the set speed and use at a speed that will not incur vibrations.
- Depending on your working conditions, certain operations may incur vibrations even during use within the operation speed range.

■ This product does not have a motor mounted.
The user must prepare, mount, and adjust the motor and driver. Refer to the instruction manual for details on mounting the motor, and perform mounting appropriately. Refer to the instruction manual of your motor for adjustment.

■ For slider products, especially when using with wall-hanging and suspension mounting, sag or deviation may occur in the steel belt. Continued use in these conditions may lead to the steel belt coming apart, or other malfunctions. Perform daily inspection, adjusting the steel belt in the event that you find sag or deviation.

■ The recommended servo motor has a gain adjustment function that reduces vibrations.
Perform gain adjustment and operate in controlled conditions with reduced vibration during operation and stopping. Operating in conditions that are subject to vibration or resonance may lead to shortened service life of the product.

■ Wiring and inspection should be performed by a professional.

■ Perform wiring after mounting the product.
This may lead to electric shock.

■ Wait at least 5 minutes after the power is OFF and confirm voltage with a tester or other tool before performing wiring or inspection.
This may lead to electric shock.

■ Do not wire or mount/remove connectors while power is ON.
Misoperation, failure, or electric shock may occur.

■ Use a lead wire that has a diameter allowing for significant instantaneous max. current for the power supply cable.
Otherwise, heat radiation or damage may occur during operation.

■ Do not disassemble or modify the product.
It may result in injury, accidents, misoperation, or damage to the product.

■ Ensure proper operation through periodic inspections (2 to 3 times a year).

■ Grease the product at 100 km intervals as a general guide.
Note that grease interval differs depending on the working conditions. It is recommended to determine the interval based on initial inspection. Refer to the instruction manual for details.

■ Wear protective glasses during greasing.
If grease flies into your eyes, it may cause inflammation.

■ When disposing of the product, do so in accordance with laws concerning waste disposal and cleaning, and hire a waste disposal professional.

Model Selection Check Sheet → CKD (Contact)

Fill in the form and send to the nearest CKD Sales Office. We will respond with the model selection results.

Customer:

Your company name		Department	
Name		e-mail	
TEL		FAX	

Selecting conditions:

Desired model		
Basic specifications	Max. stroke: mm, Ball screw lead: mm	
Operating conditions	Travel stroke: mm, Travel time: s	
	Setting speed: mm/s	
	Set acceleration/deceleration: mm/s^2 (Set acceleration/deceleration time: s)	
	Repeatability: ± mm	
Load conditions	Slider	Rod type
	Load weight: kg	
	Mounting orientation: Horizontal/wall hanging/vertical/suspension/other 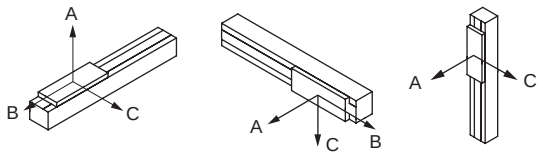	Mounting orientation: Horizontal/wall hanging/vertical/suspension/other 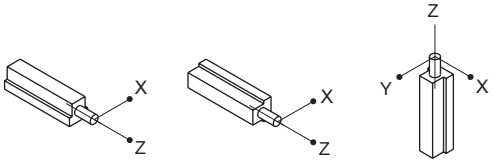
	Distance from the slider and center of the rod to center of gravity of load	
	A direction: mm B direction: mm C direction: mm	X direction: mm Y direction: mm Z direction: mm
	Pressing load: No / Yes (N) Operating/Stopped Direction of the force applied to slider center ( )	
Working environment	Ambient temperature: °C, Ambient humidity: %	
	Atmosphere:	
Motor used	Manufacturer: , Model No.:	
	Motor capacity, size:	
Remarks		

Model Selection Check Sheet → Attn: CKD (Rep name)

Fill in the form and send to the nearest CKD Sales Office. We will respond with the model selection results.

Customer:

Company		Department	
Name		E-mail	
Tel.		Fax	

Selecting conditions:

Combination	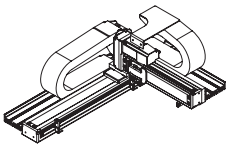 X-Y	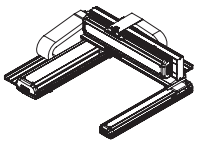 X-Y (With support guide)	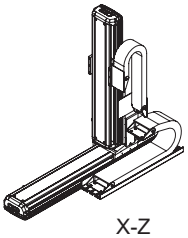 X-Z	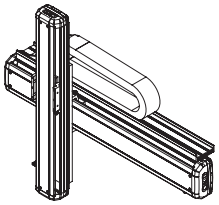 Y-Z
	1st axis		2nd axis	
Basic specifications	Combination direction:			
	Max. stroke length:	mm	Max. stroke length:	mm
	Repeatability: ±	mm	Repeatability: ±	mm
Operating conditions	Travel stroke:	mm	Travel stroke:	mm
	Set speed:	mm/s	Set speed:	mm/s
	Travel time:	s	Travel time:	s
	Set acceleration/deceleration:	mm/s^2	Set acceleration/deceleration:	mm/s^2
	Set acceleration/deceleration time:	s	Set acceleration/deceleration time:	s
Load conditions	Load weight:	kg		
			Distance from 2nd axis slider center to load center of gravity	
			For X-Y 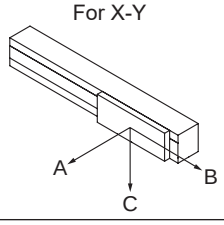 For X-Z, Y-Z 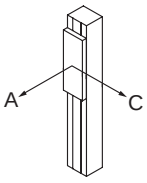	
			A direction:	mm
			B direction:	mm
			C direction:	mm
	Remarks regarding load:		Remarks regarding load:	
Pressing load	Pressing load: No / Yes (N) Operating / Stopped Direction of the force applied to slider center ( )		Pressing load: No / Yes (N) Operating / Stopped Direction of the force applied to slider center ( )	
Working environment	Ambient temperature:	°C, ambient humidity:		%
	Atmosphere:			
Motor used	Manufacturer:			
	Motor capacity:	W	Motor capacity:	W
	Model No.:		Model No.:	
	Model No.:		Model No.:	
Remarks				

Related products

Electric actuator　EBS-M/G, EBR-M/G Series

Catalog No.CC-1422A



■ Slider EBS-M/G Series
High speed transport

■ Rod with built-in guide EBR-M/G Series
For press fitting and hoisting

■ Controller ECR Series
"One controller" that connects to any actuator

■ Controller ECG Series
New controller enabling EZ inventory management, EZ design, EZ setting

Electric actuator　FLSH/FLCR/FGRC Series

Catalog No.CC-1444A



■ 2-finger Gripper FLSH Series
For soft handling of multi-model workpieces

■ Table FLCR Series
For short-stroke workpiece transport and positioning

■ Rotary FGRC Series
For indexing operation and workpiece inversion

■ Controller ECR Series
“One controller” that connects to any actuator

■ Controller ECG Series
New controller enabling EZ inventory management, EZ design, EZ setting

Electric actuator　KBX Series

Catalog No.CC-1287A

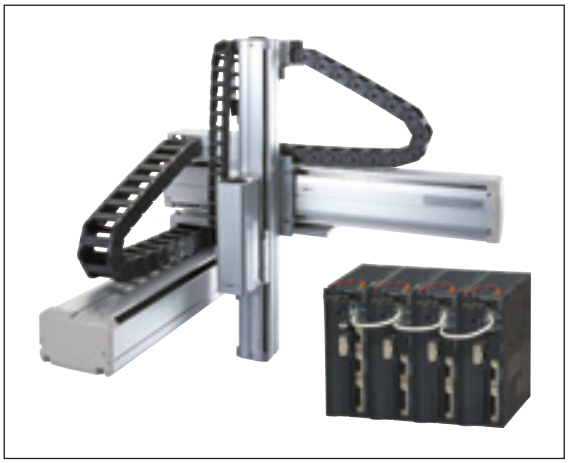

■ Fast tact
Max. 2000 mm/s (timing belt drive)

■ High precision
Repeatability: ±0.01 mm (ball screw drive)

■ All models are absolute types
Long service life lithium batteries (50,000 hour life) are used and all models do not require to return to home position

■ High level processing with a high speed CPU
High level processing is achieved due to a high speed CPU

■ Wide variation
8 types of ball screws, 7 types of timing belts
4 directions selectable for each axis for motor mounting position

■ ABSODEX
AX1000/2000/4000TS/TH
AX6000MU Series
AX7000XS Series

- The Direct Drive Actuator is designed to be user-friendly from palm-sized to large torques. Easily constructs transport, positioning, and other various equipment



■ τ DISC Series

- The Direct Drive Servo Motor has high performance
  High precision, high speed, speed stability, and a variety of other requirements are met in this varied line-up. Performance ranked one level higher.



NIKKI DENSO

Electric shuttle mover ESM Series

Catalog No. CC-1259A

■ A two-dimensional transport system with a single motor

- With the single motor, two-dimensional transport is possible, and space can be used efficiently
- A maximum of 20 m long stroke length high speed transport is possible, which the single axis electric actuator could not do
- Freely performs multipoint positioning, soft start, and soft stop
- Mount a servo motor you're familiar with



WORLD-NETWORK

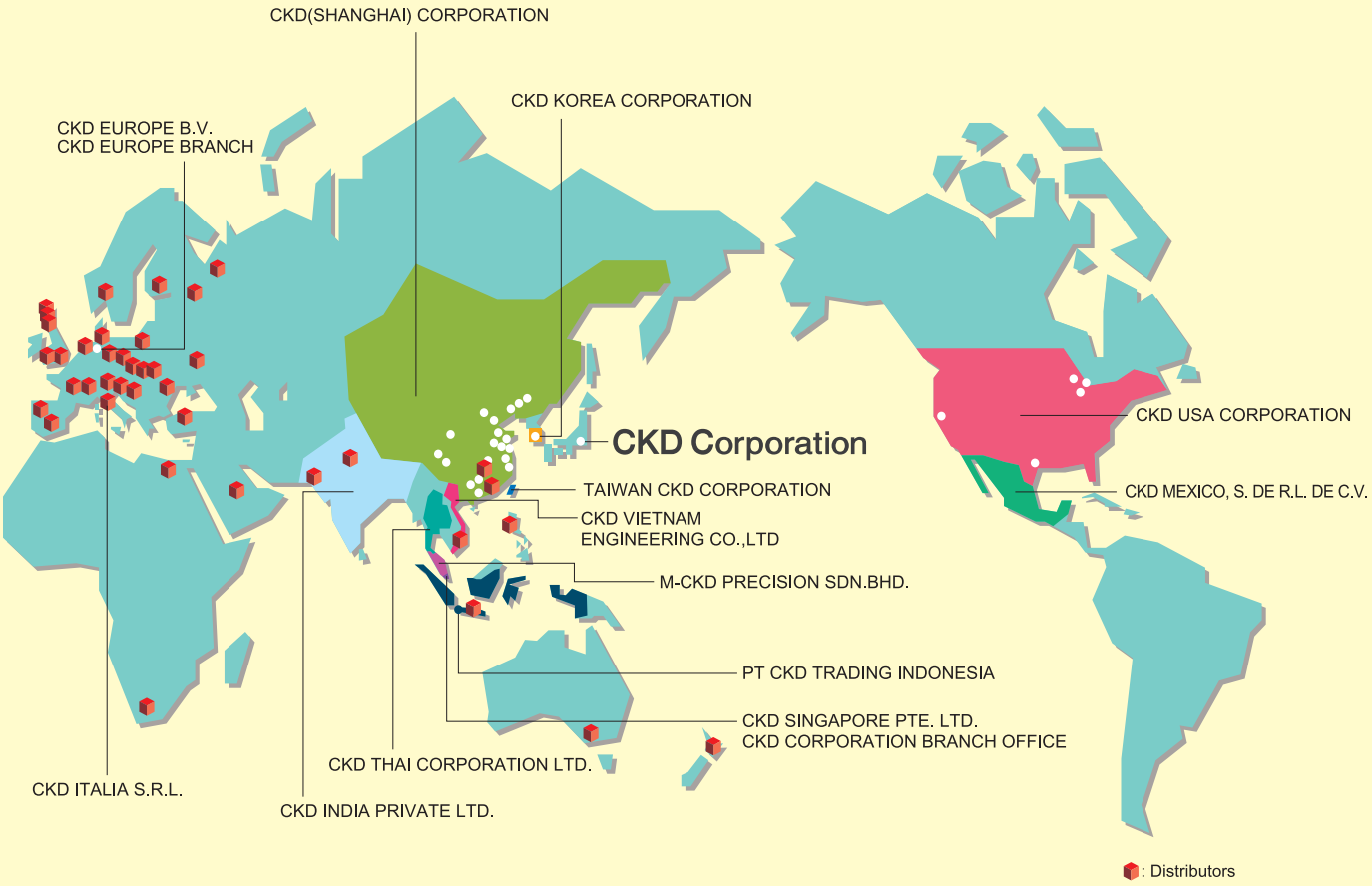

CKD Corporation

Website https://www.ckd.co.jp/en/

□ 2-250 Ouji, Komaki City, Aichi 485-8551, Japan
□ PHONE +81-568-74-1338 FAX +81-568-74-1165

ASIA

喜開理(上海)機器有限公司
CKD(SHANGHAI)CORPORATION

- 営業部/上海浦西事務所(SALES HEADQUARTERS / SHANGHAI PUXI OFFICE)
  Room 612, 6th Floor, Yuanzhongkeyan Building, No. 1905 Hongmei Road, Xuhui District, Shanghai 200233, China
  PHONE +86-21-60906046 FAX +86-21-60906046
- 上海浦東事務所(SHANGHAI PUDONG OFFICE)
- 寧波事務所(NINGBO OFFICE)
- 杭州事務所(HANGZHOU OFFICE)
- 無錫事務所(WUXI OFFICE)
- 昆山事務所(KUNSHAN OFFICE)
- 蘇州事務所(SUZHOU OFFICE)
- 南京事務所(NANJING OFFICE)
- 合肥事務所(HEFEI OFFICE)
- 成都事務所(CHENGDU OFFICE)
- 武漢事務所(WUHAN OFFICE)
- 鄭州事務所(ZHENGZHOU OFFICE)
- 長沙事務所(CHANGSHA OFFICE)
- 重慶事務所(CHONGQING OFFICE)
- 西安事務所(XIAN OFFICE)
- 広州事務所(GUANGZHOU OFFICE)
- 中山事務所(ZHONGSHAN OFFICE)
- 深圳西事務所(WEST SHENZHEN OFFICE)
- 深圳東事務所(EAST SHENZHEN OFFICE)
- 東莞事務所(DONGGUAN OFFICE)
- 厦門事務所(XIAMEN OFFICE)
- 福州事務所(FUZHOU OFFICE)
- 瀋陽事務所(SHENYANG OFFICE)
- 大連事務所(DALIAN OFFICE)
- 長春事務所(CHANGCHUN OFFICE)
- 北京事務所(BEIJING OFFICE)
- 天津事務所(TIANJIN OFFICE)
- 青島事務所(QINGDAO OFFICE)
- 潍坊事務所(WEIFANG OFFICE)
- 済南事務所(JINAN OFFICE)
- 烟台事務所(YANTAI OFFICE)

CKD INDIA PRIVATE LTD.

- HEADQUARTERS
  Unit No. 607, 6th Floor, Welldone Tech Park, Sector 48, Sohna Road, Gurgaon-122018, Haryana, India
  PHONE +91-124-418-8212
- BANGALORE OFFICE
- PUNE OFFICE
- CHENNAI OFFICE
- MUMBAI OFFICE
- HYDERABAD OFFICE

PT CKD TRADING INDONESIA

- HEAD OFFICE
  Menara Bidakara 2, 18th Floor, Jl. Jend. Gatot Subroto Kav. 71-73, Pancoran, Jakarta 12870, Indonesia
  PHONE +62-21-2938-6601 FAX +62-21-2906-9470
- MEDAN OFFICE
- BEKASI OFFICE
- KARAWANG OFFICE
- SEMARANG OFFICE
- SURABAYA OFFICE

CKD KOREA CORPORATION

- HEADQUARTERS
  (3rd Floor), 44, Sinsu-ro, Mapo-gu, Seoul 04088, Korea
  PHONE +82-2-783-5201～5203 FAX +82-2-783-5204
- 水原営業所(SUWON OFFICE)
- 天安営業所(CHEONAN OFFICE)
- 蔚山営業所(ULSAN OFFICE)

M-CKD PRECISION SDN.BHD.

- HEAD OFFICE
  Lot No.6,Jalan Modal 23/2, Seksyen 23, Kawasan MIEL, Fasa 8, 40300 Shah Alam,Selangor Darul Ehsan, Malaysia
  PHONE +60-3-5541-1468 FAX +60-3-5541-1533
- JOHOR BAHRU BRANCH OFFICE
- PENANG BRANCH OFFICE

CKD SINGAPORE PTE. LTD.

No.33 Tannery Lane #04-01 Hoesteel Industrial Building, Singapore 347789, Singapore
PHONE +65-67442623 FAX +65-67442486

CKD CORPORATION BRANCH OFFICE

No.33 Tannery Lane #04-01 Hoesteel Industrial Building, Singapore 347789, Singapore
PHONE +65-67447260 FAX +65-68421022

CKD THAI CORPORATION LTD.

- HEADQUARTERS
  19th Floor, Smooth Life Tower, 44 North Sathorn Road, Silom, Bangrak, Bangkok 10500, Thailand
  PHONE +66-2-267-6300 FAX +66-2-267-6304-5
- NAVANAKORN OFFICE
- EASTERN SEABOARD OFFICE
- LAMPHUN OFFICE
- KORAT OFFICE
- AMATANAKORN OFFICE
- PRACHINBURI OFFICE
- SARABURI OFFICE

台湾喜開理股份有限公司
TAIWAN CKD CORPORATION

- HEADQUARTERS
  16F-3, No. 7, Sec. 3, New Taipei Blvd., Xinzhuang Dist., New Taipei City 242, Taiwan
  PHONE +886-2-8522-8198 FAX +886-2-8522-8128
- 新竹営業所(HSINCHU OFFICE)
- 台中営業所(TAICHUNG OFFICE)
- 台南営業所(TAINAN OFFICE)
- 高雄営業所(KAOHSIUNG OFFICE)

CKD VIETNAM ENGINEERING CO.,LTD.

- HEADQUARTERS
  18th Floor, CMC Tower, Duy Tan Street, Cau Giay District, Hanoi, Vietnam
  PHONE +84-24-3795-7631 FAX +84-24-3795-7637
- HO CHI MINH OFFICE

EUROPE

CKD EUROPE B.V.

- HEADQUARTERS
  Beechavenue 125A, 1119 RB Schiphol-Rijk, the Netherlands
  PHONE +31-23-554-1490
- CKD EUROPE GERMANY OFFICE
- CKD EUROPE UK
- CKD EUROPE CZECH O.Z.

CKD CORPORATION EUROPE BRANCH

Beechavenue 125A, 1119 RB Schiphol-Rijk, the Netherlands
PHONE +31-23-554-1490

CKD ITALIA S.R.L.

Via di Fibbiana 15 Calenzano (FI) CAP 50041, Italy
PHONE +39 0558825359 FAX +39 0558827376

NORTH AMERICA & LATIN AMERICA

CKD MEXICO, S. DE R.L. DE C.V.

Cerrada la Noria No. 200 Int. A-01, Querétaro Park II, Parque Industrial Querétaro, Santa Rosa Jáuregui, Querétaro, C.P. 76220, México
PHONE +52-442-161-0624

CKD USA CORPORATION

- HEADQUARTERS
  1605 Penny Lane, Schaumburg, IL 60173, USA
  PHONE +1-847-648-4400 FAX +1-847-565-4923
- LEXINGTON OFFICE
- SAN ANTONIO OFFICE
- SAN JOSE OFFICE/ TECHNICAL CENTER
- DETROIT OFFICE
- BOSTON OFFICE

The goods and/or their replicas, the technology and/or software found in this catalog are subject to complementary export regulations by Foreign Exchange and Foreign Trade Law of Japan. If the goods and/or their replicas, the technology and/or software found in this catalog are to be exported from Japan, Japanese laws require the exporter makes sure that they will never be used for the development and/or manufacture of weapons for mass destruction.

●Specifications are subject to change without notice. © CKD Corporation 2024 All copy rights reserved.

2024.3

Electric Actuator Motorless General Catalog

Website introduction

You can download CKD product PDF catalogs and CAD data.

https://www.ckd.co.jp/

For catalog PDF/DXF data

CKD Website Component products > Documents/Download Digital Catalog/PDF Catalog

For new product PDF/DXF data

CKD Website Component products > Search from product list Search from new products

For 2D/3D CAD data

CKD Website Component products > Documents/Download 2D CAD data/3D CAD data

CKD Corporation

[Website]
https://www.ckd.co.jp/en/

Head Office・Plant	2-250, Ouji, Komaki, Aichi 485-8551	TEL(0568)77-1111	FAX(0568)77-1123
Tokyo Office	4F, Bunkahousou Media Plus, 1-31-1, Hamamatsu-cho, Minato-ku, Tokyo 105-0013	TEL(03)5402-3620	FAX(03)5402-0120
Osaka Office	6F, PMO EX Shin-Osaka, 4-2-10 Miyahara, Yodogawa-ku, Osaka 532-0003	TEL(06)6396-9630	FAX(06)6396-9631

●Specifications are subject to change without notice.
© CKD Corporation 2024 All copy rights reserved.

2024.3