CKD

Pneumatic Cylinders Ⅱ

Combined functions | Braking and position locking
High speed type | Special type
Oscillation/rotation drive type | Modular unit
Length measuring function | Hands | Chucks
Related products

Ver. 9

Ver. 2

Catalog No. CB-030SA-9

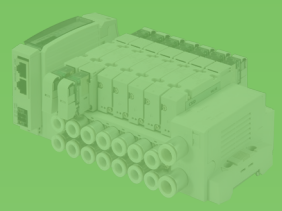

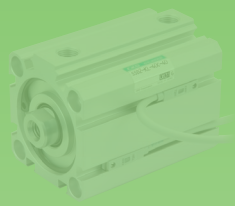
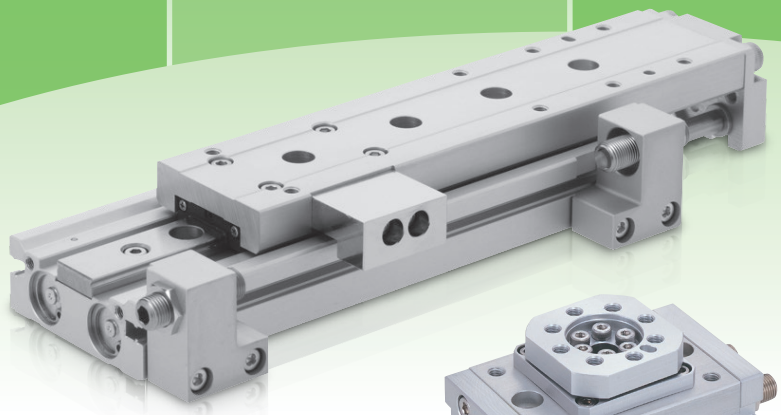
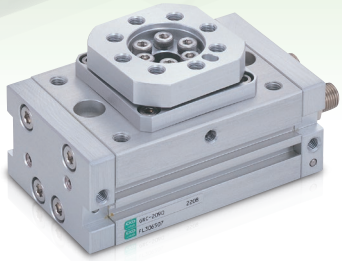

Guide to CKD Components General Catalog

CKD offers a wide variety of products
to meet your various needs.
Select the ideal product
according to your application.

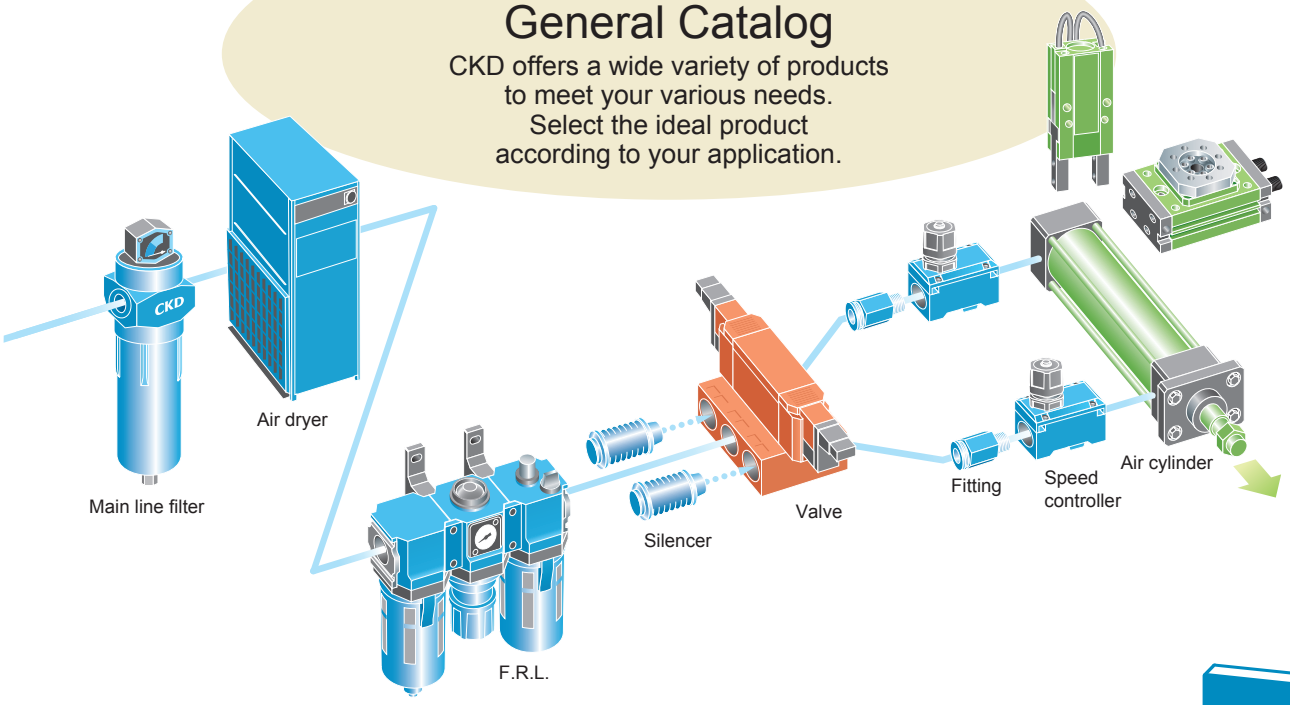

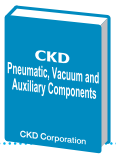

Pneumatic, Vacuum and Auxiliary Components

F.R.L. units
Modular design (F.R.L.)
Drain separator
Anti-bacterial / bacteria-removing filter
Compact regulator / Filter regulator
Large bore size filter / Regulator
Precision regulator
Mechanical pressure switch
Residual pressure exhaust valve
Adapter/joiner
Pressure gauge
Vacuum filter / Regulator
Clean filter / Regulator
Electro pneumatic regulator

Pneumatic auxiliary components
Speed controller
Silencer
Auxiliary valve
Fitting/tube
Air blow nozzle

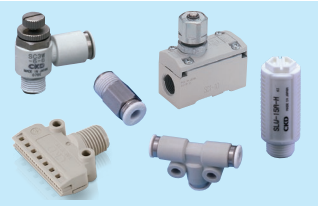

Air unit components
Clean air unit
Air unit

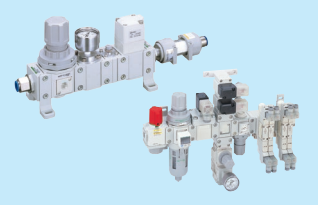

Precision components
Glass float module
Precise suction plate
Magnetic spring buffer

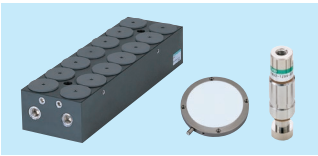

Pressure sensors
Electronic pressure switch
Contact/close contact check/ cutting tool breakage detection switch
Air sensor
Pressure switch for coolant

Sensor/controller components
Gas flow sensor
Gas flow controllers
Water flow rate sensor

Total air systems
Total air system (detector/circuit device)
γ system (PLC components/ signal control components)

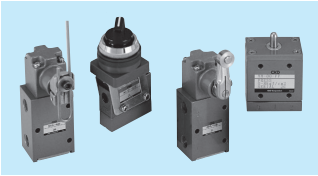

Gas generator
Nitrogen gas extraction unit
Oxygen concentration monitor

Main line units
Air dryer
High polymer membrane Air dryer unit
Main line filter
Drain discharger

● Catalogs for chemical liquids for semiconductors and valves for process gases are also available.

Pneumatic Cylinders Ⅰ and Ⅱ

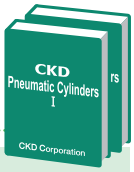

Pneumatic Cylinders Ⅰ

- Standard
- With valve
- Space saving structure
- Rodless type
- Related products
  - Shock absorber
  - Free joint
  - Simplified floating joint
  - Speed controller
- Cylinder switches

Standard

Space saving structure

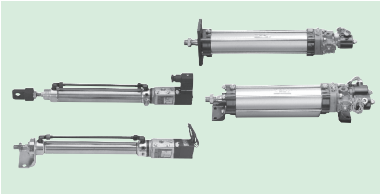
With valve

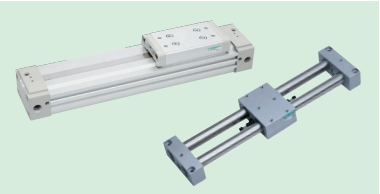
Rodless

Pneumatic Cylinders Ⅱ

- Combined functions
- Braking and position locking
- High speed
- Special type
- Oscillation/rotation drive
- Modular unit
- Length measuring function
- Hands/chucks
- Related products
  - Shock absorber
  - Free joint
  - Simplified floating joint
  - Speed controller
- Cylinder switches

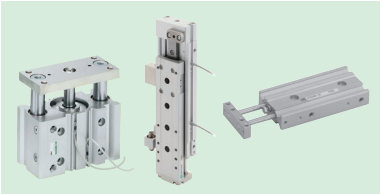
Combined functions

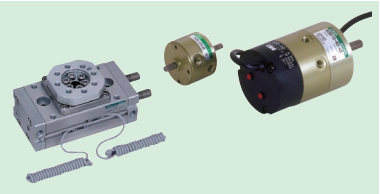
Oscillation/rotation drive

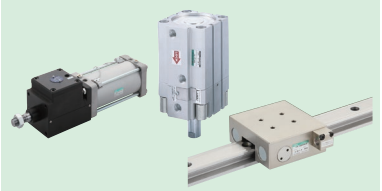
With brake/position locking

Hand/chuck

Pneumatic Valves

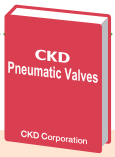

- Pilot operated
- Direct acting
- Explosion-proof
- Manual selector
- Related products

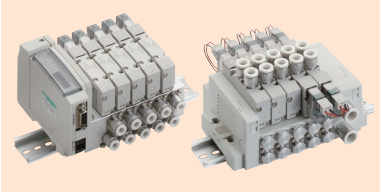
3, 4, 5-port pilot operated valve

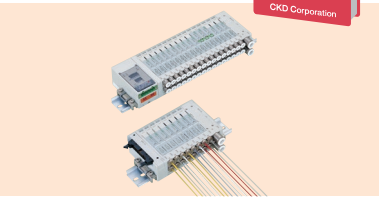
Reduced wiring valve

General Purpose Valves

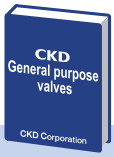

- 2, 3-port solenoid valves for various fluid control
  - Direct acting 2, 3-port solenoid valve
  - Pilot operated 2-port solenoid valve
  - Air driven 2, 3-port valve
  - Motorized ball valve
  - Components for Life Science
  - Related products for water
  - Gas combustion system
  - Automatic watering control device
  - Products for outdoor use
  - Special fluid control valve

2, 3-port direct acting solenoid valve

2-port air operated valve

Index Units (Index Drive)

- Roller gear cam units
- Parallel cam units
- Pick and place units
- Direct drive actuators
- Drivers/controllers/dedicated terminals

Search
Selection
Caution

Combined functions	LCM
	LCR
	LCG
	LCW
	LCX
	STM
	STG
	STS/STL
	STR2
	UCA2
With brake/position locking	ULK*
	JSK/M2
	JSG
	JSC3/JSC4
	USSD
	UFCD
	USC
	UB
	JSB3
	LMB
	LML
High speed	HCM
	HCA
Special	LBC
	CAC4
	UCAC2
	CAC-N
	UCAC-N
	RCS2
	RCC2
	PCC
	SHC
	MCP
	GLC
	MFC
	BBS
Oscillation/rotation drive	RRC
	GRC
	RV3*
Modular unit	NHS
	HRL
Length measuring function	LN
	Hand
	Chuck
	Mechanical hand/chuck
Related products	Shock absorber
	FJ
	FK
	Speed controller

Ending

INDEX

User's Guide Intro Page 3

1 Search by product name/model No.
Product name Intro Page 1
Model No. index in alphabetic order Ending Page 172

2 Search by product series Intro Page 5
Select from external appearance and product description of each series.
Recommended alternative products Intro Page 19

Guide for CKD Electronic Catalog Intro Page 21

3 Search by bore size Intro Page 23

4 Search by specifications and variation Intro Page 37

System selection Intro Page 49
"Select by cylinder tube bore size and operation speed" or
"Select by load value and operating time"

Safety precautions
- Pneumatic components precautions Intro Page 71
- Pneumatic cylinders general precautions Intro Page 73
- Cylinder switch precautions Intro Page 80

* For cautions for individual products, read the cautions for the corresponding series.

Flow rate characteristics display method	Intro Page 68
Degree of protection	Intro Page 69
● Cylinder switch	Ending Page 1
● Technical data	Ending Page 55
● International System of Units (SI units)	Ending Page 74
● Rod eye/clevis dimension list	Ending Page 75
● Custom order products	Ending Page 85
Introduction of custom order products	Ending Page 111
Systems/product guide	Ending Page 125
Ozone-proof products	Ending Page 137
JIS symbol list	Ending Page 151
● CE Marking	Ending Page 162
● CKD RoHS Compliance	Ending Page 164
ISO9001/ISO14001 Certification	Ending Page 166
Index (alphabetic order)	Ending Page 172

* Intro/Ending sections are common for Cylinders I and II.

Catalogs and CAD data (2D/3D-CAD) can be downloaded from the CKD website.
https://www.ckd.co.jp/kiki/en/

Combined functions p.1

With brake function
With position locking function p.669

High speed p.953

Special p.993

Oscillation/rotation drive p.1281

Modular unit p.1411

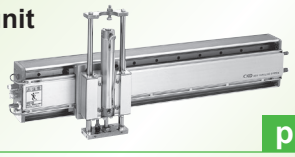

Length measuring function p.1463

Hand p.1503

Chuck p.1771

Related products p.1889

Product group	Product name	Model No.	Page
Combined functions	Linear slide cylinder	LCM	5
	Linear slide cylinder	LCR	53
	Linear slide cylinder	LCG	135
	Linear slide cylinder	LCW	199
	Thin linear slide cylinder	LCX	249
	Guided cylinder	STM	309
	Guided cylinder	STG	329
	Guided cylinder	STS/STL	441
	Twin rod cylinder	STR2	575
	Unit cylinder	UCA2	635
With brake function With position locking function	Brake cylinder	ULKP/ULK	671
	Brake cylinder (medium bore size)	JSK2/JSM2	701
	Tie rod cylinder with brake	JSG	737
	Brake cylinder (medium and large bore size)	JSC3/JSC4	767
	Position locking compact cylinder	USSD	841
	Free position locking flat cylinder	UFCD	885
	Free position locking large bore size cylinder	USC	901
	Look unit	UB	927
	Brake unit	JSB3	933
	Linear guide lock	LMB	939
	Linear guide lock	LML	945
High speed	High energy absorption cylinder	HCM	957
	High speed cylinder	HCA	975
Special	Air bearing actuator	LBC	995
	Clamp cylinder	CAC4	1005
	Position locking clamp cylinder	UCAC2	1029
	Lightweight clamp cylinder	CAC-N	1043
	Position locking and lightweight clamp cylinder	UCAC-N	1043
	Rotary clamp cylinder	RCS2	1063
	Rotary clamp cylinder	RCC2	1095
	Pin clamp cylinder	PCC	1117
	High power cylinder	SHC	1137
	Mechanical power cylinder	MCP	1175
	Guideless cylinder	GLC	1193
	Robot cylinder	MFC	1213
	Balancer unit	BBS	1253
Oscillation/ rotation drive	Rotary actuator	RRC	1283
	Table rotary actuator	GRC	1297
	Rotary actuator with vane mechanism	RV3*	1335
Modular unit	New handling system	NHS	1413
	Hybrid robot	HR	1451
Length measuring function	Cylinder/hand with length measuring sensor	LN	1465
Hand			1503
Chuck			1771
Mechanical hand/chuck			1883
Related products	Shock absorber	SKL/NCK/SCK/FCK	1891
	Floating fitting	FJ	1945
	Simplified floating fitting	FK	1955
	Speed controller		1961

Combined functions: LCM, LCR, LCG, LCW, LCX, STM, STG, STS/STL, STR2, UCA2
With brake/position locking: ULK*, JSK/M2, JSG, JSC3/JSC4, USSD, UFCD, USC, UB, JSB3, LMB, LML
High speed: HCM, HCA
Special: LBC, CAC4, UCAC2, CAC-N, UCAC-N, RCS2, RCC2, PCC, SHC, MCP, GLC, MFC, BBS
Oscillation/ rotation drive: RRC, GRC, RV3*
Modular unit: NHS, HRL
Length measuring function: LN
Hand
Chuck
Mechanical hand/chuck
Related products: Shock absorber, FJ, FK, Speed controller
Ending

User's Guide (How to browse/use the catalog)

Quickly search for and select a desired product using **1** to **4** methods.

1 Search by product name/model No.

If the product name/model No. are already determined, the desired series page can be found.

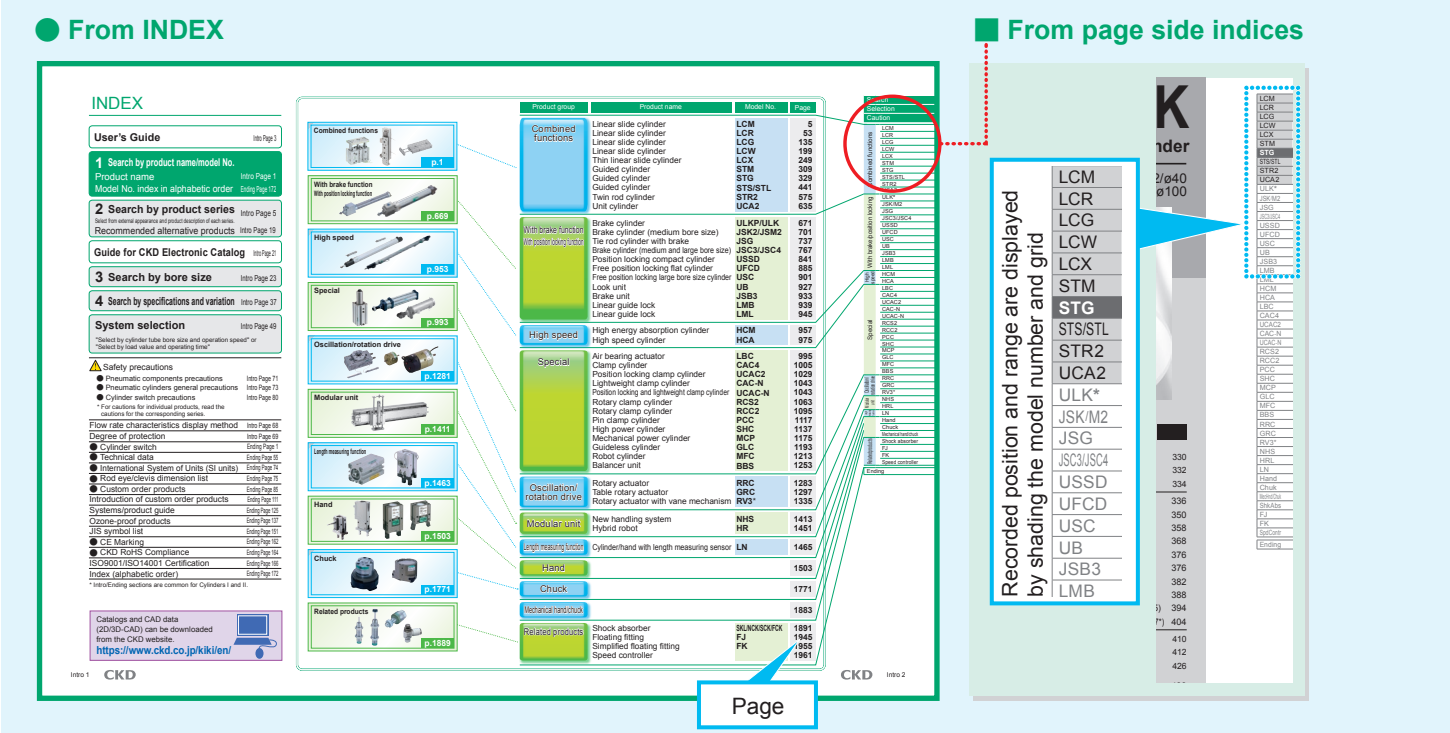

3 Search by bore size

Intro Pages 23 to 36

If bore size is already determined, the desired series page can be found.

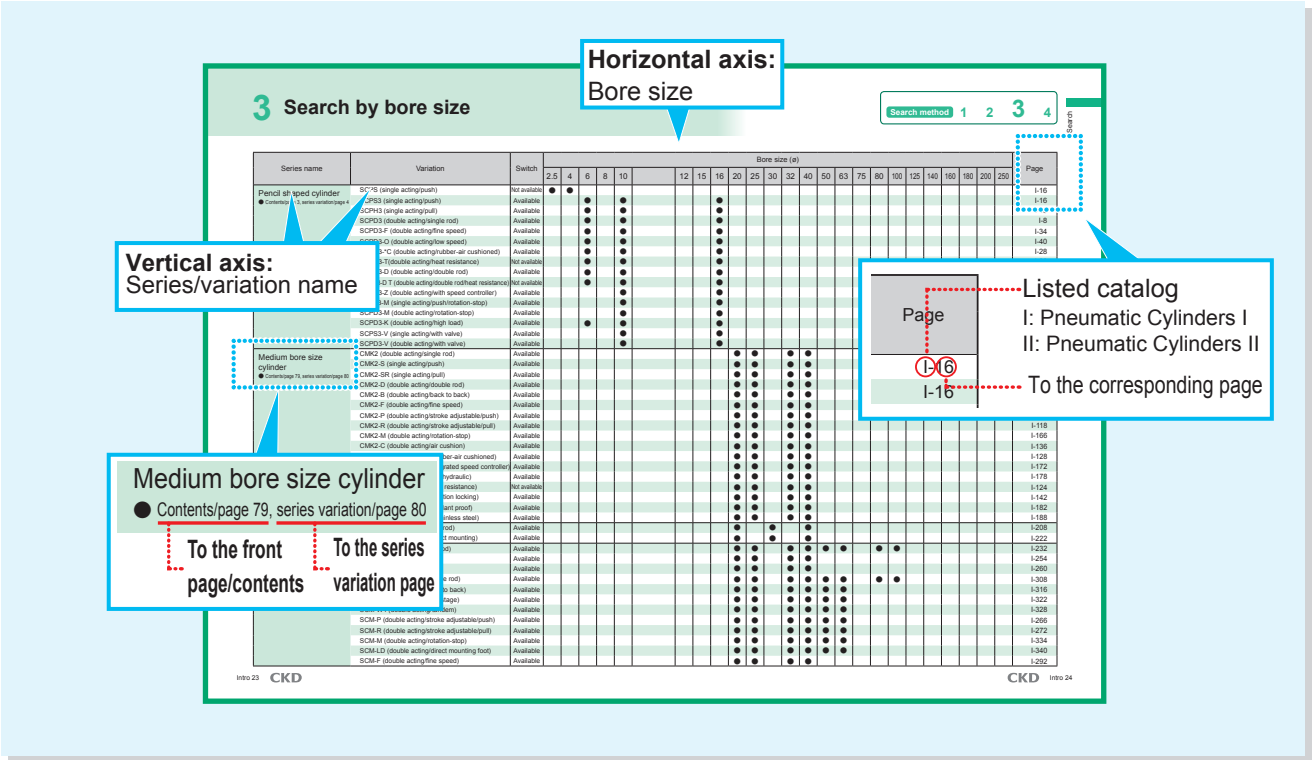

Ending Pages 172 to 199

● In alphabetical order

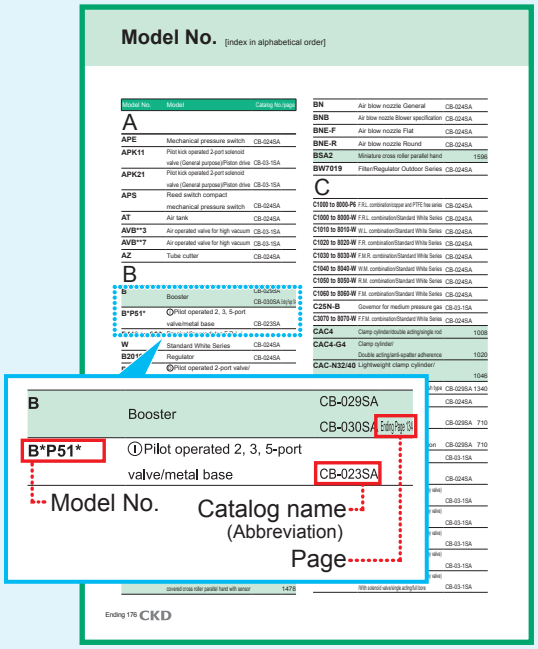

2 Search by product series

Intro Page 5

If the product's series name is already determined, the desired series page can be found.

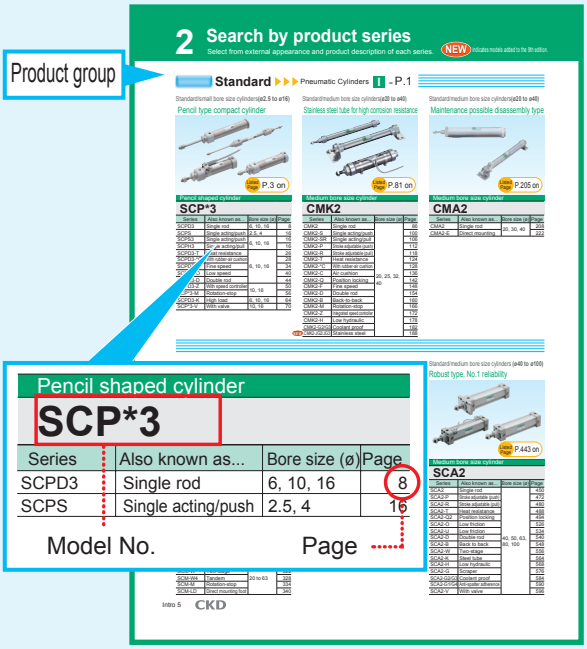

4 Search by specifications and variation

Intro Pages 37 to 48

If the variation format is already determined, the desired product can be found.

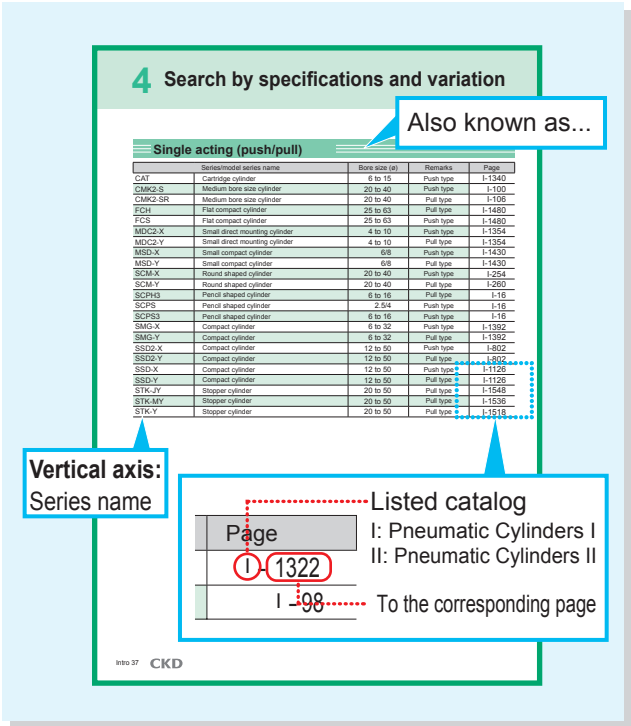

Icons (marks)

For easier use of the catalog, each item is marked and compatible items are indicated in the text.

Mark	Meaning	Details
CAD	CAD data is available for items with CAD marks in dimensions.	Intro Page 1
CE	European Standards compliant products.	Ending Page 164
RoHS	RoHS-compliant products.	Ending Page 166

2 Search by product series

Select from external appearance and product description of each series.

NEW indicates models added to the 9th edition.

Standard ▶▶▶ Pneumatic Cylinders I - P.1

Standard/small bore size cylinders(**ø2.5 to ø16**)

Pencil type compact cylinder

Listed Page P.3 on

Pencil shaped cylinder

SCP*3

Series	Also known as...	Bore size (ø)	Page
SCPD3	Single rod	6, 10, 16	8
SCPS	Single acting/push	2.5, 4	16
SCPS3	Single acting/push	6, 10, 16	16
SCPH3	Single acting/pull		16
SCPD3-T	Heat resistance	6, 10, 16	26
SCPD3-*C	With rubber-air cushion		28
SCPD3-F	Fine speed		34
SCPD3-O	Low speed		40
SCPD3-D	Double rod		44
SCPD3-Z	With speed controller	10, 16	50
SCP*3-M	Rotation-stop		56
SCPD3-K	High load	6, 10, 16	64
SCP*3-V	With valve	10, 16	70

Standard/medium bore size cylinders(**ø20 to ø40**)

Stainless steel tube for high corrosion resistance

Listed Page P.81 on

Medium bore size cylinder

CMK2

Series	Also known as...	Bore size (ø)	Page
CMK2	Single rod	20, 25, 32, 40	86
CMK2-S	Single acting/push		100
CMK2-SR	Single acting/pull		106
CMK2-P	Stroke adjustable (push)		112
CMK2-R	Stroke adjustable (pull)		118
CMK2-T	Heat resistance		124
CMK2-*C	With rubber-air cushion		128
CMK2-C	Air cushion		136
CMK2-Q	Position locking		142
CMK2-F	Fine speed		148
CMK2-D	Double rod		154
CMK2-B	Back-to-back		160
CMK2-M	Rotation-stop		166
CMK2-Z	Integrated speed controller		172
CMK2-H	Low hydraulic		178
CMK2-G2/G3	Coolant proof		182
NEW CMK2-JG2/JG3	Stainless steel		188

Standard/medium bore size cylinders(**ø20 to ø40**)

Maintenance possible disassembly type

Listed Page P.205 on

Medium bore size cylinder

CMA2

Series	Also known as...	Bore size (ø)	Page
CMA2	Single rod	20, 30, 40	208
CMA2-E	Direct mounting		222

Standard/medium bore size cylinders(**ø20 to ø100**)

Smart type with wide range of bore sizes/options

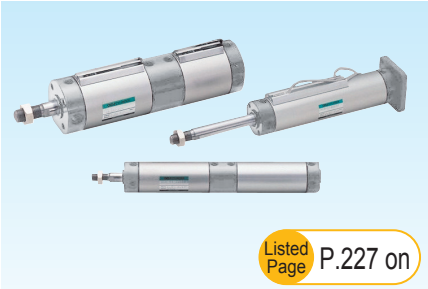

Listed Page P.227 on

Round shaped cylinder

SCM

Series	Also known as...	Bore size (ø)	Page
SCM	Single rod	20 to 100	232
SCM-X	Single acting/push	20 to 40	254
SCM-Y	Single acting/pull		260
SCM-P	Stroke adjustable (push)	20 to 63	266
SCM-R	Stroke adjustable (pull)		272
SCM-T	Heat resistance	20 to 100	278
SCM-Q	Position locking		282
SCM-F	Fine speed	20 to 40	292
SCM-O	Low speed	20 to 100	298
SCM-U	Low friction		302
SCM-D	Double rod		308
SCM-B	Back to back	20 to 63	316
SCM-W	Two-stage		322
SCM-W4	Tandem		328
SCM-M	Rotation-stop		334
SCM-LD	Direct mounting foot		340

Standard/medium bore size cylinders (**ø32 to ø100**)

Eco-friendly tie rod cylinder

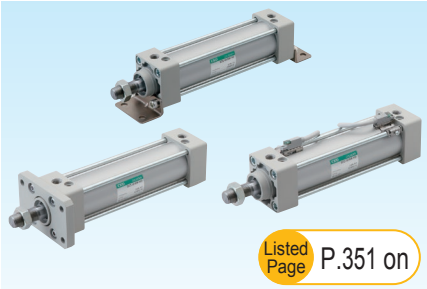

Listed Page P.351 on

Tie rod cylinder

SCG

Series	Also known as...	Bore size (ø)	Page
SCG	Single rod	32 to 100	358
SCG-Q	Position locking		374
SCG-O	Low speed		396
SCG-U	Low friction		402
SCG-D	Double rod		406
SCG-M	Rotation-stop	32 to 63	412
SCG-G	Rubber scraper	32 to 100	418
SCG-G2/G3	Coolant proof	40 to 100	424
SCG-G4	Anti-spatter adherence	32 to 100	430

Standard/medium bore size cylinders (**ø40 to ø100**)

Robust type, No.1 reliability

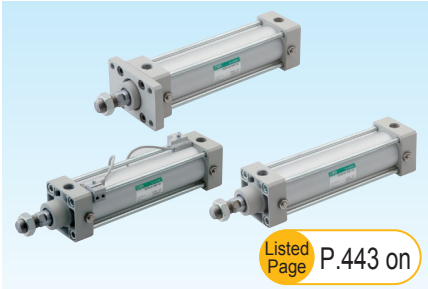

Listed Page P.443 on

Medium bore size cylinder

SCA2

Series	Also known as...	Bore size (ø)	Page
SCA2	Single rod	40, 50, 63, 80, 100	450
SCA2-P	Stroke adjustable (push)		472
SCA2-R	Stroke adjustable (pull)		480
SCA2-T	Heat resistance		488
SCA2-Q2	Position locking		494
SCA2-O	Low friction		526
SCA2-U	Low friction		534
SCA2-D	Double rod		540
SCA2-B	Back to back		548
SCA2-W	Two-stage		556
SCA2-K	Steel tube		564
SCA2-H	Low hydraulic		568
SCA2-G	Scraper		576
SCA2-G2/G3	Coolant proof		584
SCA2-G1/G4	Anti-spatter adherence		590
SCA2-V	With valve		596

Standard/large bore size cylinders **(ø125 to ø250)**

Wide range of choices and high rigidity

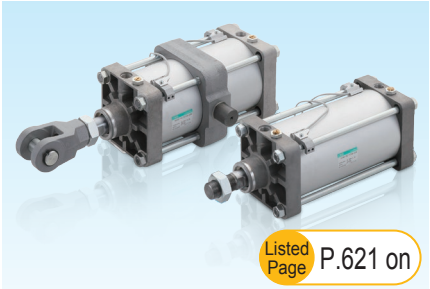

Listed Page P.621 on

Large bore size cylinder

SCS2

Series	Also known as...	Bore size (ø)	Page
SCS2	Lubrication	125, 140, 160, 180, 200, 250	626
SCS2-N	No-lubrication		626
SCS2-P	Stroke adjustable (push)		640
SCS2-T	Heat resistance		644
SCS2-D	Double rod/lubrication		648
SCS2-ND	Double rod/no-lube		648
SCS2-B	Back to back		654
SCS2-W	Two-stage		658
SCS2-H	Low hydraulic		662
SCS2-G	Rubber scraper		668

With valve

Pneumatic Cylinders I - P.673

With valve/medium bore size cylinders **(ø20 to ø40)**

CMK2 Series is equipped with high performance solenoid valve

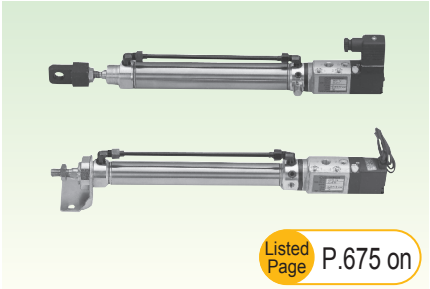

Listed Page P.675 on

Small cylinder with valve

CKV2

Series	Also known as...	Bore size (ø)	Page
CKV2	Single rod	20, 25, 32, 40	680
CKV2-M	Rotation-stop		692

With valve **(ø50/75/100)**

Years of consistent reliability

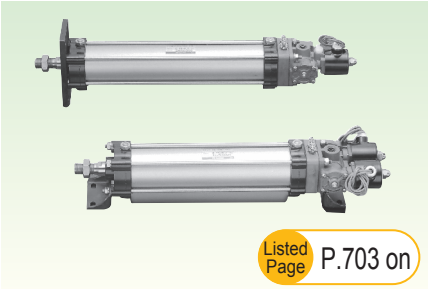

Listed Page P.703 on

Cylinder with valve

CAV2/COV$^{P}_{N}$2

Series	Also known as...	Bore size (ø)	Page
CAV2	Double solenoid/ lubrication	50, 75, 100	710
COVP2	Single solenoid/push out when energized/lubrication		710
COVN2	Single solenoid/retracted in when energized/lubrication		710
CAV2-N	Double solenoid/ no-lubrication		710
COVP2-N	Single solenoid/push out when energized/no-lubrication		710
COVN2-N	Single solenoid/retracted in when energized/no-lubrication		710

Other with valve

The following "Cylinder with valve" product lineup is also available.

Product name	Series	Bore size (ø)	Page
Pencil shaped cylinder	SCPS3-V SCPD3-V	10, 16	I-70
Medium bore size cylinder	SCA2-V	40, 50, 63, 80, 100	I-596
Guided cylinder	ST S/L-M/B V	20 to 63	II-544
Brake cylinder	ULK-V	20, 25, 32, 40	II-680
	JSK2-V	20, 25, 32, 40	II-706
	JSM2-V	20, 25, 32, 40	II-720
	JSG-V	40, 50, 63, 80, 100	II-742
	JSC3-V	40, 50, 63, 80, 100	II-810
Rotary actuator	RV3S V/W RV3D V/W	0.98 to 66.6 (Torque size)	II-1372

2 Search by product series

Select from external appearance and product description of each series.

NEW indicates models added to the 9th edition.

Space saving structure ▶▶▶ Pneumatic Cylinders I - P.743

Space saving/super compact(**ø12 to ø200**)

Wide variations/switch 4 surface mounting compact

Listed Page P.745 on

Compact cylinder

SSD2

Series	Also known as...	Bore size (ø)	Page
SSD2	Single rod	12 to 200	752
SSD2-K	High load	12 to 100	776
SSD2-L	Long stroke length		792
SSD2-X	Push type	12 to 50	802
SSD2-Y	Pull type		802
SSD2-T1	Heat resistance	12 to 100	820
SSD2-T1L	With heat resist cylinder switch	16 to 63	824
SSC2-K-*C	High load/ with rubber-air cushion	20 to 100	832
SSD2-Q	Position locking		840
SSD2-F/SSD2-KF	Fine speed/high load/fine speed	12 to 100	854
SSD2-O	Low speed		858
SSD2-KU	High load/low friction	20 to 100	864
SSD2-D	Double rod	12 to 200	868
SSD2-B	Back to back	12 to 100	890
SSD2-W	Two-stage		902
SSD2-M	Rotation-stop	12 to 63	910
SSD2-DM	Double rod/rotation-stop		924
SSD2-G	Rubber scraper	20 to 100	936
SSD2-G2/G3	Coolant proof	16 to 100	946
SSD2-KG2/KG3	High load/coolant proof		956
SSD2-G1	Coil scraper	25 to 100	966
SSD2-G4	Anti-spatter adherence		966
SSD2-KG1	High load/ coil scraper		974
SSD2-KG4	High load/ anti-spatter adherence		974
SSD2-DG1	Double rod/ coil scraper		984
SSD2-DG4	Double rod/ anti-spatter adherence		984
SSD2-G5	Environment-resistant scraper	20 to 100	992
SSD2-KG5	Hi load/ environment-resist scraper		1002
SSD2-L4	With strong magnetic field proof switch	40 to 100	1012
SSD2-G1L4	With strong magnetic field proof switch/with coil scraper		1018
SSD2-KL4	Hi load/strong magnetic field proof switch		1024
SSD2-KG1L4	Hi load/strong magnetic field proof switch/coil scraper		1030
SSD2-P7*	Clean-room specifications	12 to 160	1036

Space saving/with guide/super compact(**ø12 to ø100**)

SSD2 Series is equipped with a guide rod

Listed Page P.1065 on

Guided super compact cylinder

SSG

Series	Also known as...	Bore size (ø)	Page
SSG	Single rod	12 to 100	1068

Space saving/compact single acting(**ø6 to ø15**)

Outside diameter is full-thread thumb size

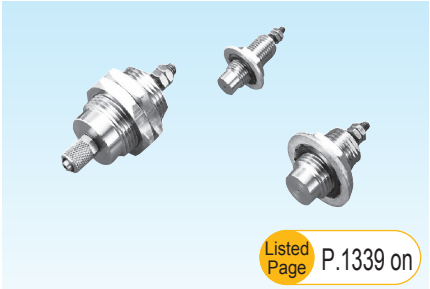

Listed Page P.1339 on

Cartridge cylinder

CAT

Series	Also known as...	Bore size (ø)	Page
CAT	Single acting/push	6, 10, 15	1340

Space saving/super compact (**ø12 to ø160**)

Compact with wide range of bore sizes/options

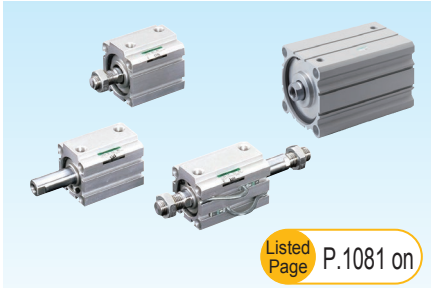

Listed Page P.1081 on

Compact cylinder

SSD

Series	Also known as...	Bore size (ø)	Page
SSD	Single rod	12 to 160	1094
SSD-K	Single rod high load	12 to 100	1116
SSD-X	Single acting/push	12, 16, 20, 25, 32, 40, 50	1126
SSD-Y	Single acting/pull		1126
SSD-T	Heat resistance	12 to 100	1138
SSD-T1L	With heat resist cylinder switch	16 to 63	1142
SSD-K-*C	High load/with rubber-air cushion	32 to 100	1150
SSD-Q	Position locking	16 to 100	1160
SSD-F	Fine speed	12 to 100	1172
SSD-KF	High load/fine speed		1172
SSD-O	Low speed		1178
SSD-KU	High load/low friction	20 to 100	1184
SSD-D	Double rod	12 to 160	1188
SSD-B	Back to back	12 to 100	1200
SSD-W	Two-stage		1210
SSD-M	Rotation-stop	12 to 63	1220
SSD-G2/G3	Coolant proof	16 to 100	1230
SSD-K G2/G3	High load, coolant proof		1238
SSD-G1/G4	Anti-spatter adherence	25 to 100	1246
SSD-K G1/G4	Hi load, anti-spatter adherence		1254
SSD-D G1/G4	Double rod, anti-spatter adherence		1264
SSD-G5	Environment-resistant scraper	20 to 100	1272
SSD-KG5	Hi load/environment-resist scraper	20 to 100	1280
SSD-L4	With strong magnetic field proof switch	40 to 100	1288
SSD-G1L4	With strong magnetic field proof switch/with coil scraper		1294
SSD-KL4	Hi load strong magnetic field proof with switch		1300
SSD-KG1L4	Hi load, strong magnetic field proof switch, coil scraper		1306

Space saving/direct mount (**ø4 to ø10**)

Can be mounted directly from 4 directions

Listed Page P.1345 on

Small direct mounting cylinder

MDC2

Series	Also known as...	Bore size (ø)	Page
MDC2	Single rod	4, 6, 8, 10	1348
MDC2-X	Push type		1354
MDC2-Y	Pull type		1354
MDC2-F	Fine speed		1364

Space saving/with small suction pad**(ø6/ø10)**

Equipped with suction pad on the rod end

Listed Page P.1371 on

Small cylinder with suction pad

MVC

Series	Also known as...	Bore size (ø)	Page
MVC	Single rod	6, 10	1374

Space saving/multisurface installation**(ø6 to ø32)**

More compact than conventional products, direct mount

NEW

Listed Page P.1383 on

Compact cylinder

SMG

Series	Also known as...	Bore size (ø)	Page
SMG	Single rod	6 to 32	1386
SMG-X	Push type		1392
SMG-Y	Pull type		1392
SMG-F	Fine speed		1400
SMG-M	Rotation-stop		1404

Space saving/compact **(ø6 to ø16)**

SSD small bore size series. Also available with high precision guide

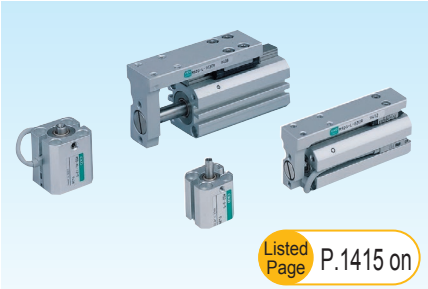

Listed Page P.1415 on

Small compact cylinder

MSD/MSDG

Series	Also known as...	Bore size (ø)	Page
MSD	Single rod	6, 8	1422
MSD-X	Single acting/push		1430
MSD-Y	Single acting/pull		1430
MSD-K	High load	6, 8, 12, 16	1440
MSD-F	Fine speed	6, 8	1450
MSD-KF	High load/fine speed	6, 8, 12, 16	1450
MSDG-L	Guided		1452
MSDG-LF	Guided/fine speed	12, 16	1462

Space saving/flat type **(ø25 to ø63)**

Mountable even in narrow spaces. With rotation-stop function

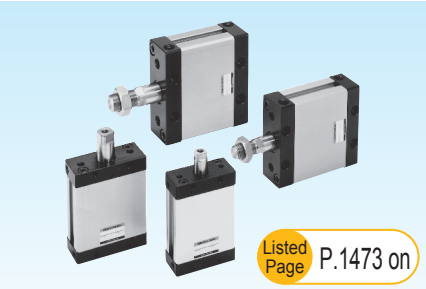

Listed Page P.1473 on

Flat compact cylinder

FC*

Series	Also known as...	Bore size (ø)	Page
FCS	Single acting/push	25, 32, 40, 50, 63 or equiv.	1480
FCH	Single acting/pull		1480
FCD	Single rod		1488
FCD-D	Double rod		1494
FCD-K	Cushioned		1500

Stopper cylinder **(ø20 to 50)**

Space-saving with excellent lateral load resistance

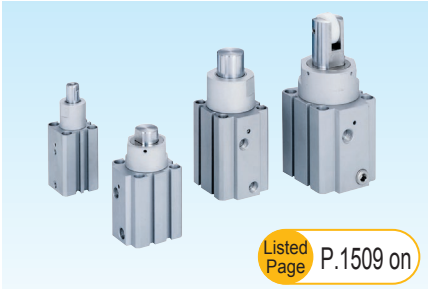

Listed Page P.1509 on

Stopper cylinder

STK

Series	Also known as...	Bore size (ø)	Page
STK	Round rod end form type	20, 32, 40, 50	1512
STK-Y	Single acting/pull/ round rod end form type		1518
STK-Y1	Spring integrated/ round rod end form type		1524
STK-M	Rod end form chamfered type		1530
STK-MY	Single acting/pull/ rod end form chamfered type		1536
STK-MY1	Spring integrated/ rod end form chamfered type		1542
STK-JY	Single acting/pull/ rod end form roller		1548
STK-JY1	Spring integrated/ rod end form roller		1554

2 Search by product series

Select from external appearance and product description of each series.

NEW indicates models added to the 9th edition.

Rodless ▶▶▶ Pneumatic Cylinders I - P.1567

Rodless/basic **(ø12 to ø100)**

Wide range of bore sizes/choices

Listed Page P.1569 on

Rodless cylinder

SRL3

Series	Also known as...	Bore size (ø)	Page
SRL3	Standard	12, 16, 20, 25, 32, 40, 50, 63, 80, 100 or equiv.	1574
SRL3-G	With resin guide		1590
SRL3-Q	With position locking function		1604
SRL3-GQ	With resin guide/ With position locking function		1614

Rodless/with high precision guide **(ø12 to ø25)**

Integrated high precision LM guide

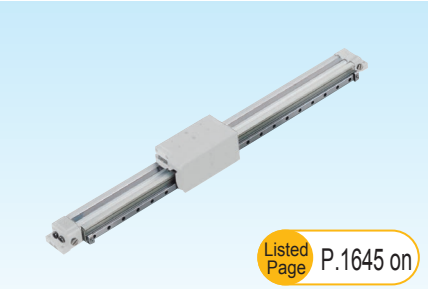

Listed Page P.1645 on

High precision guided rodless cylinder

SRG3

Series	Also known as...	Bore size (ø)	Page
SRG3	Standard	12, 16, 20, 25 or equiv.	1650

Rodless/with high precision guide **(ø25 to ø63)**

2-axis uses high precision LM guide. Improved rigidity

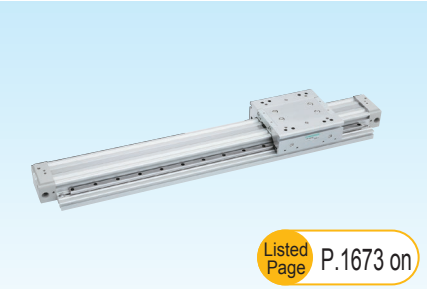

Listed Page P.1673 on

High precision guided rodless cylinder

SRM3

Series	Also known as...	Bore size (ø)	Page
SRM3	Double acting	25, 32, 40, 63 or equiv.	1676
SRM3-Q	Double acting/position locking		1676

Magnet with high precision guide **(ø10 to ø25)**

MRL2 has high precision LM guide integrated

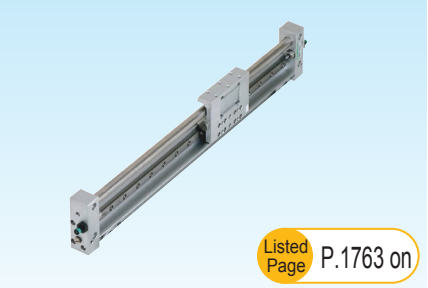

Listed Page P.1763 on

Magnet rodless cylinder with high precision guide

MRG2

Series	Also known as...	Bore size (ø)	Page
MRG2	Double acting	10, 16, 25	1766

Rodless/with brake **(ø12 to ø63)**

Highly reliable built-in brake type

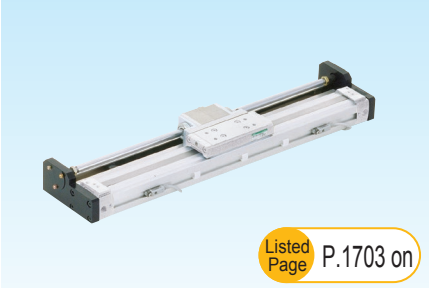

Listed Page P.1703 on

Rodless cylinder with brake

SRT3

Series	Also known as...	Bore size (ø)	Page
SRT3	Double acting	12, 16, 20, 25, 32, 42, 50, 63 or equiv.	1706

Rodless/magnet **(ø6 to ø32)**

Rodless and space-saving

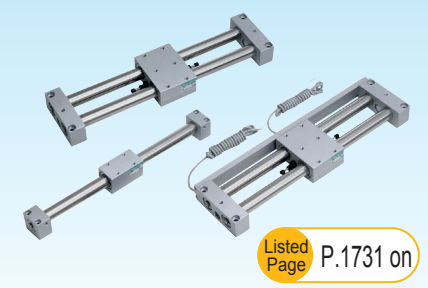

Listed Page P.1731 on

Magnet rodless cylinder

MRL2

Series	Also known as...	Bore size (ø)	Page
MRL2	Basic type	6, 10, 16, 20, 25, 32	1740
MRL2-G	Simplified guide/1 piston		1740
MRL2-W	Simplified guide/2 piston		1740
MRL2-F	Fine speed		1740

Rodless/shuttle mover **(ø25)**

Curved rodless. Free layout is possible

Listed Page P.1783 on

Shuttle mover standard/high load

SM-25

Series	Also known as...	Bore size (ø)	Page
SM-25	Standard	25	1784
	High load		

Combined functions

Pneumatic Cylinders II - P.1

Combined functions/with high precision guide (ø4.5 to ø8)

Compact with high precision/rigidity

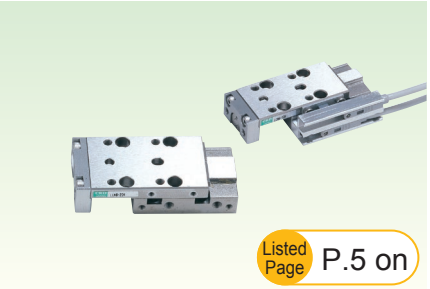

Listed Page P.5 on

Linear slide cylinder

LCM

Series	Also known as...	Bore size (ø)	Page
LCM	Single rod	4.5 to 8	10
LCM-P	Stroke adjustable (push)		18
LCM-R	Stroke adjustable (push/pull)		24
LCM-A	Side installation		30
LCM-P73	Clean-room specifications		40

Combined functions/with high precision guide (ø6 to ø25)

Drastically lighter, improved rigidity

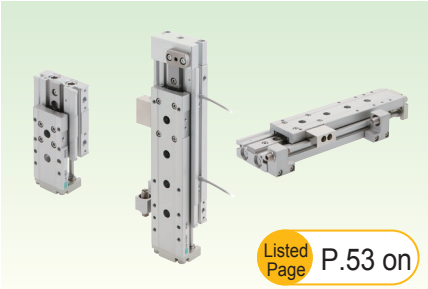

Listed Page P.53 on

Linear slide cylinder

LCR

Series	Also known as...	Bore size (ø)	Page
LCR	Basic	6 to 25	58
LCR-Q	Position locking	8 to 25	84
LCR-P7*	Clean-room specifications	6 to 25	94
LCR-F	Fine speed	12, 16, 20, 25	112
LCR-F-P7*	Fine speed/clean-room specs	12 to 25	118

Combined functions/with high precision guide (ø6 to ø25)

Focused on high precision/high rigidity. Easier to use

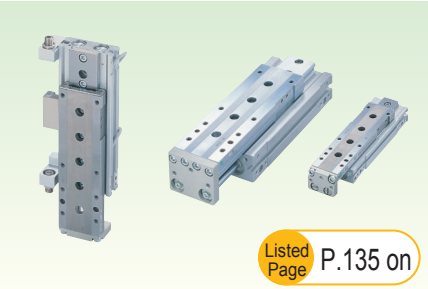

Listed Page P.135 on

Linear slide cylinder

LCG

Series	Also known as...	Bore size (ø)	Page
LCG	Single rod	6 to 25	140
LCG-Q	Position locking	8 to 25	164
LCG-P7*	Clean-room specifications	6 to 25	172

Combined functions/with high precision guide (ø12 to ø20)

Specs most used by customers are provided as standard

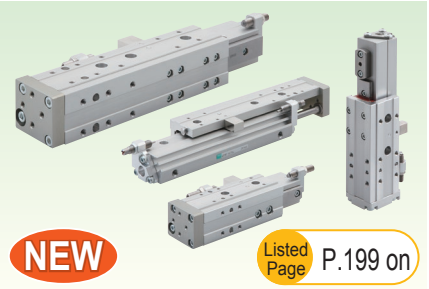

Listed Page P.199 on

Linear slide cylinder

LCW

Series	Also known as...	Bore size (ø)	Page
LCW	Single rod	12 to 20	204
LCW-Q	Position locking		224

Combined functions/with high precision guide (ø25, ø32)

Drastically slimmer, thus ideal for space saving applications

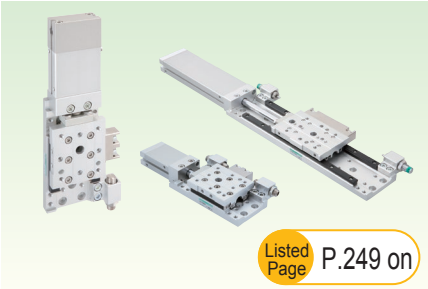

Listed Page P.249 on

Thin linear slide cylinder

LCX

Series	Also known as...	Bore size (ø)	Page
LCX	Single rod	25, 32	254
LCX-Q	Position locking		264
LCX-P7*	Clean-room specifications		270
LCX-*L	Long stroke length		276
LCX-Q-*L	Position locking/ long stroke length		286
LCX-*L-P7*	Clean-room specifications/ long stroke length		292

2 Search by product series

Select from external appearance and product description of each series.

NEW indicates models added to the 9th edition.

Combined functions ▶▶▶ Pneumatic Cylinders II - P.1

Combined functions/guided cylinder **(ø6, ø10)**

Space saving with compact guide

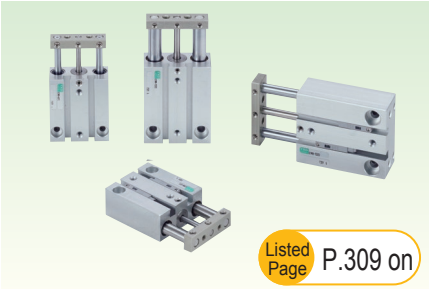

Listed Page P.309 on

Guided cylinder

STM

Series	Also known as...	Bore size (ø)	Page
STM-M/B	Single rod	6, 10	314
STM-B-P7*	Clean-room specifications		320

Combined functions/guided cylinder **(ø12 to ø100)**

Environment-friendly product. Load resistance improved

Listed Page P.329 on

Guided cylinder

STG

Series	Also known as...	Bore size (ø)	Page
STG-M/B	Single rod	12 to 100	336
STG-M/B-*C	Rubber-air cushioned	32 to 63	350
STG-M/B C	Air cushion	16 to 63	358
STG-M/B Q	Position locking	20 to 63	368
STG-M/B G	Rubber scraper		376
STG-M/B G1	Coil scraper		376
STG-MG2/MG3	Coolant proof		382
STG-M/B G4	Anti-spatter adherence	40 to 63	388
STG-MG5	Environment-resistant scraper	20 to 100	394
STG-B-P7*	Clean-room specifications	12 to 63	404
STG-K	Heavy duty guide rod	32, 50	430

Combined functions/guided cylinder **(ø8 to ø100)**

Wide range of bore sizes/choices

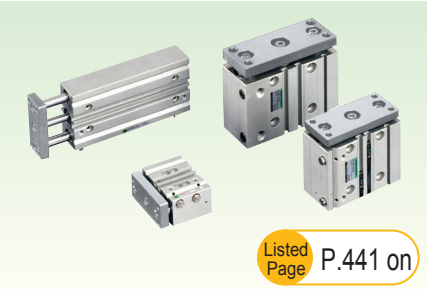

Listed Page P.441 on

Guided cylinder

STS/STL

Series	Also known as...	Bore size (ø)	Page
ST S/L-M/B	Single rod	8 to 100	448
ST S/L-M/B P	Stroke adjustable (push)	8 to 80	470
ST S/L-M/B T	Heat resistance	12 to 80	476
ST S/L-M/B T2	Packing material fluoro rubber		480
ST S/L-M/B-*C	Rubber-air cushioned	32 to 80	486
ST S/L-M/B C	Air cushion	25 to 80	492
ST S/L-M/B Q	Position locking	20 to 80	500
ST S/L-M/B F	Fine speed	8 to 80	512
ST S/L-M/B O	Low speed		514
ST S/L-M/B G	Rubber scraper/	20 to 80	518
ST S/L-M/B G1	Coil scraper		
ST S/L-M/B G 2/3	Coolant proof		526
ST S/L-M/B G4	Anti-spatter adherence	40 to 80	536
ST S/L-M/B V	Valve equipped	20 to 63	544

Combined functions/twin rod cylinder **(ø6 to ø32)**

High non-rotating accuracy with twin rod. For pick & place applications

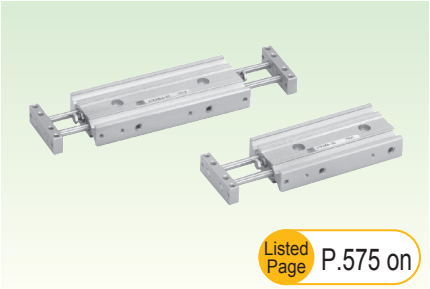

Listed Page P.575 on

Twin rod cylinder

STR2

Series	Also known as...	Bore size (ø)	Page
STR2-M/B	Standard	6, 10, 16, 20, 25, 32	580
STR2-M/B Q	Position locking	16, 20, 25, 32	592
STR2-M/B O	Low speed	6, 10, 16, 20, 25, 32	602
STR2-M/B F	Fine speed	10, 16, 20, 25, 32	610
STR2-M/B D	Double rod	6, 10, 16, 20, 25, 32	612

Combined functions/unit cylinder **(ø10 to ø32)**

Stable position accuracy with double rod structure

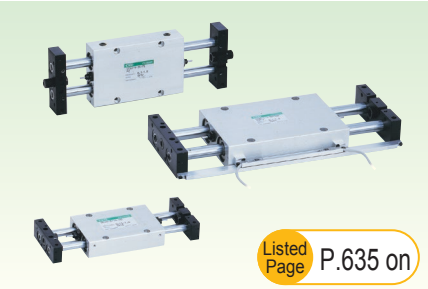

Listed Page P.635 on

Unit cylinder

UCA2

Series	Also known as...	Bore size (ø)	Page
UCA2	Metal bush bearing	10, 16, 25, 32	640
UCA2-B	Ball bearing		650

With brake/position locking

Pneumatic Cylinders II - P.669

With brake/small medium bore size **(ø16 to ø40)**

Pencil type, etc. with high performance compact brake

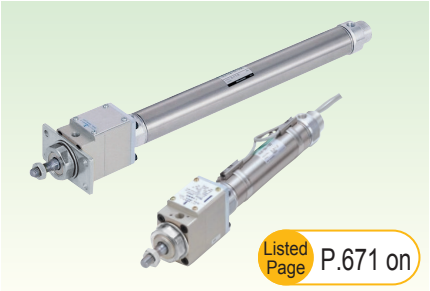

Listed Page P.671 on

Brake cylinder (small/medium bore size)

ULKP/ULK

Series	Also known as...	Bore size (ø)	Page
ULKP	Single rod	16	674
ULK		20, 25, 32, 40	680
ULK-V	With valve	20, 25, 32, 40	680

With brake/small medium bore size **(ø20 to ø40)**

CMK2/CMA2 equipped with highly reliable built-in brake

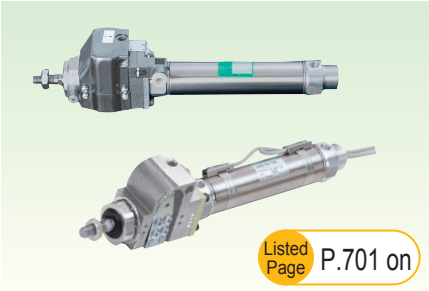

Listed Page P.701 on

Brake cylinder (small/medium bore size)

JSK2/JSM2

Series	Also known as...	Bore size (ø)	Page
Caulking model			
JSK2	Single rod	20, 25, 32, 40	706
JSK2-V	With valve		706
Disassembly type			
JSM2	Single rod	20, 30, 40	720
JSM2-V	With valve		720

With brake/medium bore size **(ø40 to ø100)**

SCG equipped with highly reliable built-in brake mechanism

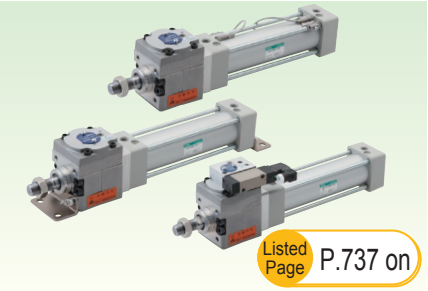

Listed Page P.737 on

Tie rod cylinder with brake

JSG

Series	Also known as...	Bore size (ø)	Page
JSG	Single rod	40, 50 63, 80, 100	742
JSG-V	With valve for brake release		

With brake/medium large bore size **(ø40 to ø180)**

Highly reliable robust cylinders equipped with brake

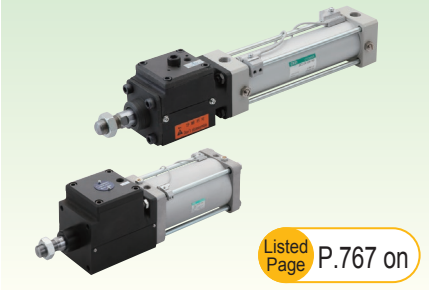

Listed Page P.767 on

Brake cylinder (medium and large bore size)

JSC3/JSC4

Series	Also known as...	Bore size (ø)	Page
JSC3	Single rod	40 to 100	774
JSC4	Single rod	125 to 180	774
JSC3-V	With valve for brake	40 to 100	810
JSC3-H	Low hydraulic	40 to 100	818
JSC4-H	Low hydraulic	125 to 180	818
JSC3-T	Heat resistance	40 to 100	830
JSC4-T	Heat resistance	125 to 180	830

With position locking **(ø20 to ø100)**

Compact SSD equipped with position locking function

Listed Page P.841 on

Position locking compact cylinder

USSD

Series	Also known as...	Bore size (ø)	Page
USSD	Single rod	20, 25, 32, 40, 50, 63, 80, 100	846
USSD-K	High load		846

With position locking **(ø25 to ø63)**

Flat cylinder FCD Series equipped with position locking function

Listed Page P.885 on

Free position locking flat cylinder

UFCD

Series	Also known as...	Bore size (ø)	Page
UFCD-KL	Single rod/ cushioned	25 to 63	888

2 Search by product series

Select from external appearance and product description of each series.

NEW indicates models added to the 9th edition.

With brake/position locking ▶▶▶ Pneumatic Cylinders II - P.669

With position locking **(ø40 to ø100)**

Position locking possible at any position

Listed Page P.901 on

Free position locking medium bore size cylinder

USC

Series	Also known as...	Bore size (ø)	Page
USC	Single rod	40 to 100	904
USC-G1	With coil scraper		904

Lightweight. Slim lock unit

"Fixing," "improved safety," and "position locking" are possible

NEW

Listed Page P.927 on

Lock unit

UB

Series	Applicable shaft diameter	Page
UB	8, 16	930

With brake/brake unit

Brake section installed in brake cylinder alone integrated into a unit

Listed Page P.933 on

Brake unit

JSB3

Series	Rod diameter	Page
JSB3	16, 20, 25, 30, 35, 40, 45	936

With brake/LM guide brake

Highly reliable brake mounted to LM guide

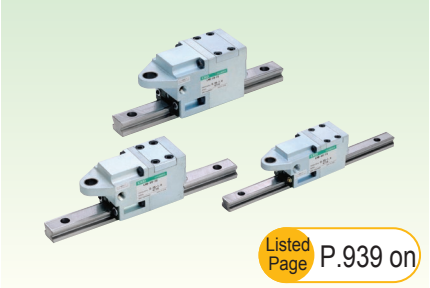

Listed Page P.939 on

Linear guide lock

LMB

Series	Page
LMB	942

With brake function/lock unit

Compact linear guide with strong holding force

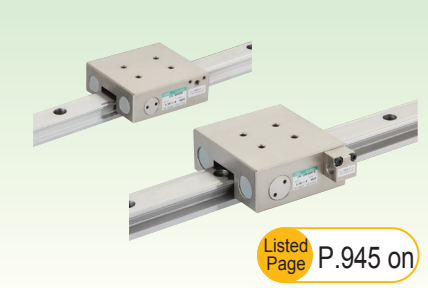

Listed Page P.945 on

Linear guide lock

LML

Series	Page
LML	947

High speed ▶▶▶ Pneumatic Cylinders II - P.953

High speed/high speed cylinder**(ø20 to ø63)**

High speed operation at 2000 mm/s. High cushion performance

Listed Page P.957 on

High energy absorption cylinder

HCM

Series	Also known as...	Bore size (ø)	Page
HCM	Single rod	20 to 63	960

High speed/high speed cylinder**(ø20 to ø100)**

High speed operation at 3000 mm/s. High cushion performance

Listed Page P.975 on

High speed cylinder

HCA

Series	Also known as...	Bore size (ø)	Page
HCA	Single rod	20, 25, 32, 40, 50, 63, 80, 100	978

Special

Pneumatic Cylinders II - P.993

Air static pressure soft actuator

"Zero" sliding resistance achieved

Listed Page P.995 on

Air bearing actuator

LBC

Series	Also known as...	Page
LBC	Push type	998

Combined functions/clamp cylinder **(ø40 to ø80)**

Clamp dedicated cylinder

Listed Page P.1005 on

Clamp cylinder

CAC4

Series	Also known as...	Bore size (ø)	Page
CAC4	Single rod	40, 50, 63, 80	1008
CAC4-G4	Anti-spatter adherence	40, 50, 63, 80	1020

With brake/position locking **(ø50/ø63)**

Clamp cylinder equipped with position locking function

Listed Page P.1029 on

Position locking clamp cylinder

UCAC2

Series	Also known as...	Bore size (ø)	Page
UCAC2	Single rod	50, 63	1030

Combined functions/clamp cylinder **(ø32/ø40)**

Clamp dedicated, contributes to reduction of welding jig weight

Listed Page P.1043 on

Lightweight clamp cylinder

CAC-N

Series	Also known as...	Bore size (ø)	Page
CAC-N	Single rod	32, 40	1046

With brake/position locking **(ø32/ø40)**

Equipped with free position locking function

Listed Page P.1043 on

Lightweight clamp cylinder

UCAC-N

Series	Also known as...	Bore size (ø)	Page
UCAC-N	With position locking	32, 40	1052

Rotary clamp **(ø12 to ø63)**

Simple design makes compact clamping a reality

NEW

Listed Page P.1063 on

Rotary clamp cylinder

RCS2

Series	Also known as...	Bore size (ø)	Page
RCS2	Single rod	12 to 63	1068
RCS2-T2	Packing material fluoro rubber		1078
RCS2-G4	Anti-spatter adherence	32 to 63	1084

2 Search by product series

Select from external appearance and product description of each series.

NEW indicates models added to the 9th edition.

Special ▶▶▶ Pneumatic Cylinders II - P.993

Rotary clamp **(ø16 to ø63)**

Optimal for clamping in small spaces

Listed Page P.1095 on

Rotary clamp cylinder

RCC2

Series	Also known as...	Bore size (ø)	Page
RCC2	Single rod	16 to 63	1096
RCC2-G4	Anti-spatter adherence	20 to 63	1108

Pin clamp cylinder

Positioning and clamping of workpiece is possible with a single cylinder

NEW

Listed Page P.1117 on

Pin clamp cylinder

PCC

Series	Also known as...	Bore size (ø)	Page
PCC	Single rod	50	1118
PCC-Q	Position locking		1118

End booster**(ø40 to ø100)**

Booster with end alone. Energy-saving cylinder.

Listed Page P.1137 on

High power cylinder

SHC

Series	Also known as...	Bore size (ø)	Page
SHC	Double force	40 to 100	1144
SHC-K	Quadruple force		1154

Mechanical power cylinder

With just pneumatic source, high thrust equal to hydraulic cylinder is achieved

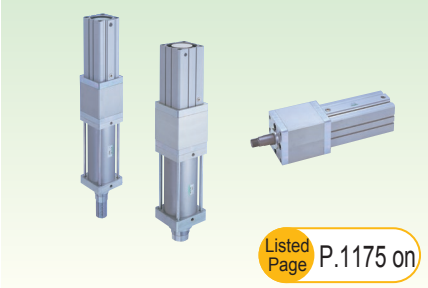

Listed Page P.1175 on

Mechanical power cylinder

MCP

Series	Also known as...	Bore size (ø)	Page
MCP-W	Rapid feed + booster	For 2t/5t	1180
MCP-S	Booster section only		

Combined functions/guideless cylinder **(ø40 to ø100)**

Rotation-stop without guide, excellent lateral load resistance

Listed Page P.1193 on

Guideless cylinder

GLC

Series	Also known as...	Bore size (ø)	Page
GLC	Single rod	40 to 100	1198

Combined functions/robot cylinder **(ø30 to ø80)**

Structure that receives a load with the whole frame

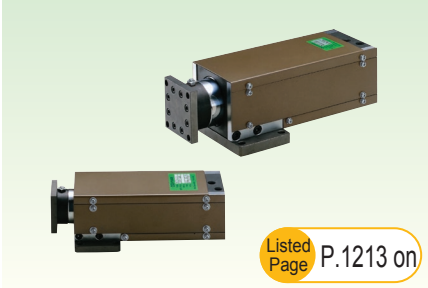

Listed Page P.1213 on

Robot cylinder

MFC

Series	Also known as...	Bore size (ø)	Page
MFC	Single rod	30, 40, 50, 63, 80	1218
MFC-K	High load		1218
MFC-B	With brake		1226
MFC-BK	High load with brake		1226
MFC-BS	With brake sensor		1236
MFC-BSK	High load with brake sensor		1236

Oscillation/rotation drive

Pneumatic Cylinders II - P.1281

Balancer unit **(ø50 to ø100)**

Air source alone easily supports heavy objects

Listed Page P.1253 on

Balancer unit

BBS

Series	Also known as...	Bore size (ø)	Page
BBS-A	Auto pressure adjustment	50 to 100	1258
BBS-O	Fixed pressure adjustment		1270

Oscillation/rotation drive 0.7 to 5.6 N•m

Rack and pinion type and compact oscillation

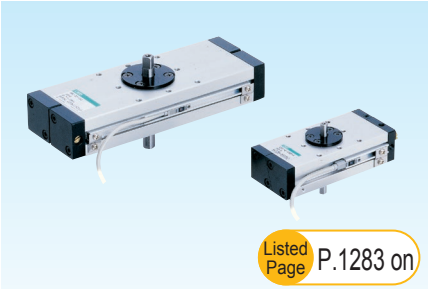

Listed Page P.1283 on

Rotary actuator

RRC

Series	Also known as...	Torque size	Page
RRC	Rack and pinion mechanism	0.7 to 5.6	1286

* Torque size (N·m, at 0.5 MPa)

Oscillation/rotation drive 0.5 to 8.0 N•m

Table actuator. High precision also available

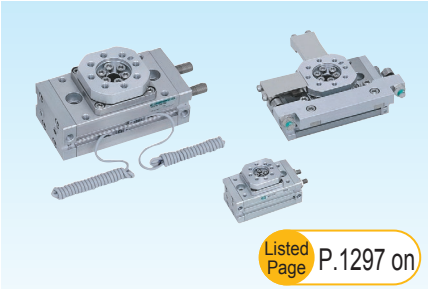

Listed Page P.1297 on

Table rotary actuator

GRC

Series	Also known as...	Torque size	Page
GRC	Basic	0.5 to 8.1	1302
GRC-K	High accuracy	1.0 to 8.1	1302
GRC-F	Fine speed	0.5 to 8.1	1316
GRC-KF	High accuracy/fine speed	1.0 to 8.1	1316

* Torque size (N·m, at 0.5 MPa)

Modular unit

Pneumatic Cylinders II - P.1411

Oscillation/rotation drive 0.12 to 0.66 N•m

Vane type. Wide range of torque sizes.

Listed Page P.1335 on

Rotary actuator with vane mechanism

RV3*

Series	Also known as...	Torque size	Page
Compact			
RV3S	Single vane mechanism	0.12 to 3.19	1338
RV3D	Double vane mechanism	0.28 to 7.70	1338
RV3S V/W	Single vane/with valve	0.98 to 3.19	1350
RV3D V/W	Double vane/with valve	2.11 to 7.70	1350
RV3SA	Angle variable, single vane mech	0.31 to 3.19	1354
RV3DA	Angle variable, double vane mech	0.71 to 7.70	1354
Large			
RV3S (Large)	Single vane mechanism	4.7 to 102	1364
RV3D (Large)	Double vane mechanism	10.1 to 206	1364
RV3S V/W	Single vane/with valve	4.7 to 27.9	1372
RV3D V/W	Double vane/with valve	10.1 to 66.6	1372
RV3SH	Single vane/low hydraulic	4.7 to 102	1378
RV3DH	Double vane/low hydraulic	10.1 to 206	1378
RVC	Shock absorber		1382

* Torque size (N·m, at 0.5 MPa)

Unit components/XYZ-axis combined unit

Selectable X-axis (load capacity), YZ-axis.

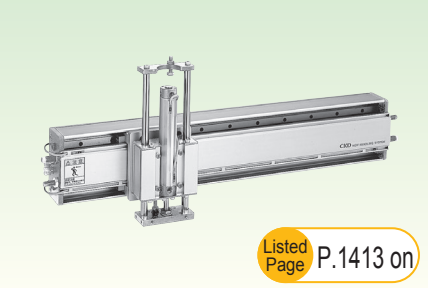

Listed Page P.1413 on

New handling system

NHS

Series	Also known as...	Page
NSR	X-axis module	1422
NHS-H	Z-axis module (HRL)	1430
NHS-S	Z-axis module (STL-B)	1440

Single axis unit

Thin with high rigidity

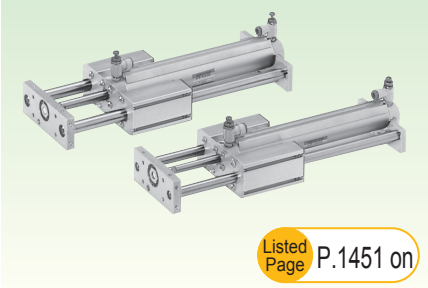

Listed Page P.1451 on

Hybrid robot

HRL

Series	Also known as...	Page
HRL-1	Pneumatic robot element/single-axis unit	1452

2 Search by product series

Select from external appearance and product description of each series. NEW indicates models added to the 9th edition.

Length measurement function

Pneumatic Cylinders II - P.1463

Length measurement function/cylinder/hand

Compact cylinder/hand equipped with length measurement function

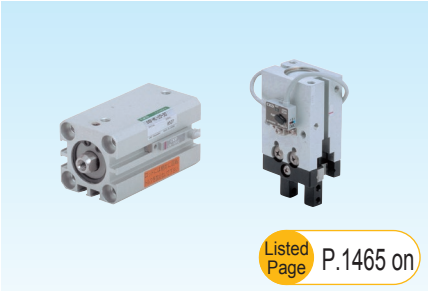

Listed Page P.1465 on

Cylinder/hand with length measuring sensor

LN

Series	Also known as...	Bore size (ø)	Page
SSD-LN SSD-O-LN	Cylinder with sensor Compact cylinder type	12 to 50	1474
BHA-LN	Cross roller parallel hand with sensor	12, 16, 20, 25	1478
BHG-LN	Cross roller parallel hand with sensor with rubber cover	12, 16, 20, 25	1478
BHE-LN	Centering hand with sensor	12, 16, 20, 25	1478

Hand/chuck

Pneumatic Cylinders II - Hand: Page 1503 Chuck: Page 1771

Diverse variety is available, including thin, lightweight, and wide types.

Listed Page P.1503 on

Parallel hand

Hand

Series	Also known as...	Bore size (ø)	Page
Parallel hand			
NEW LSH-HP1 LSHL-HP1	Linear Slide Hand (HP Series)	6 to 32	1506
NEW LSHM-HP2	Linear Slide Hand with length measuring function (HP Series)	10 to 25	1508
LSH	Linear Slide Hand (standard)	10 to 25	1581
FH100	Feather hand (Mini-parallel hand)	10 to 25	1590
BSA2	Miniature cross roller parallel hand	6	1596
BHA	Compact cross roller parallel hand	12 to 25	1600
BHG	Compact cross roller parallel hand with rubber cover	12 to 25	1606
LHA	Linear guide hand	6 to 32	1612
LHAG	Linear guide hand with rubber cover	12 to 32	1620
HAP-1C	Parallel hand	15	1628
HAP	Parallel hand	20 to 40	1630
HKP	Cross roller parallel hand	32 to 80	1636
HCP	Lateral parallel hand	12 to 32	1642
HGP	Long stroke parallel hand	25	1648
Thin parallel hand			
NEW HLF2	Long stroke length thin hand	8×2 to 20×2	1652
HLA/HLB	Thin parallel hand	12 to 20	1662
HLAG/ HLBG	Thin parallel hand with rubber cover	12 to 20	1670
HLC	Thin long stroke parallel hand	8×2 to 30×2	1678
HLD	Ultra thin parallel hand	8×4 to 20×4	1686
Wide parallel hand			
HMF	Compact wide parallel hand	12×2 to 40×2	1690
NEW HMF-G	Compact wide parallel hand with coolant specifications	16×2 to 25×2	1700
HMFB	Large wide parallel hand with linear guide	25×2 to 40×2	1708

Listed Page P.1503 on

Fulcrum hand/centering hand

Hand

Series	Also known as...	Bore size (ø)	Page
Fulcrum hand			
HFP	Wide parallel hand	16×2 to 40×2	1714
FH500	Feather hand (Mini-fulcrum hand)	10 to 20	1720
HBL	Fulcrum hand	15 to 40	1726
HJL	Toggle hand	32 to 63	1732
HMD	180 degree open/close thin wide angle hand	12 to 25	1738
HDL	180 degree open/ close wide angle hand	25 to 40	1744
HJD	180 degree open/close high gripping wide angle hand	32 to 63	1748
Centering hand			
BHE	Centering hand	12 to 32	1752

Compact/powerful. Diverse variety available

Listed Page P.1771 on

Chuck

Series	Also known as...	Bore size (ø)	Page
3-way chuck			
CKL2	Powerful chuck	16 to 100	1774
CKLG2	Powerful chuck with rubber cover	20 to 100	1786
CKL2-HC	Position locking powerful chuck	32 to 80	1794
CKH2	Powerful chuck with high gripping power	50 to 100	1800
CKLB2	Bi-directional powerful chuck (parallel hand)	20 to 100	1806
CKG	3-way jaw bearing chuck	16 to 50	1814
CK	3-way jaw long stroke chuck	25 to 44	1820
CKA	3-way slim chuck	16 to 100	1826
CKS	Thin chuck	8×3 to 32×3	1834
NEW CKS-F	Slim chuck (hollow)	16×3 to 50×3	1844
CKF	Hollow chuck	30 to 80	1852
CKJ	Ultra long stroke chuck	12×6 to 50×6	1858
Auto hand changer			
CHC	Auto hand changer		1874

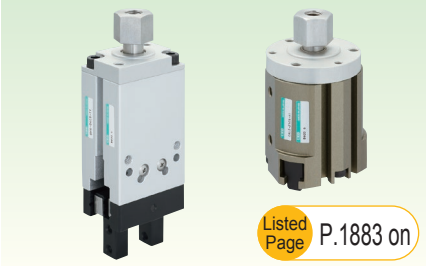

Listed Page P.1883 on

Mechanical hand/chuck

Series	Also known as...	Cylinder bore size (ø)	Page
BHA-FC	Mechanical hand	12 to 32	1884
CKL2-FC	Mechanical chuck	20 to 40	1886

Related products ▶▶▶ Pneumatic Cylinders II - P.1889

Shock absorber/**(absorbing capacity 1 to 720J)**

3 models are available according to the application

Shock absorber

SKL, NCK, SCK, FCK

Series	Also known as...	Absorbed energy	Page
Fixed			
SKL NEW	-	0.2 to 3.6	1894
NCK	-	1 to 200	1902
Adjustable			
SCK	-	0.049 to 588	1914
FCK-L	Low speed	1.5 to 79.3	1924
FCK-M	Medium speed	1.8 to 720	1924
FCK-H	High speed		1924

Absorbed energy: J

Free fitting/**(size M3 to M45)**

For preventing misalignment during cylinder mounting. 3 models available

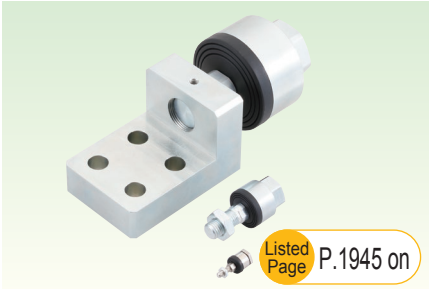

Floating fitting

FJ

Series	Page
FJ	1948

Simplified floating connector

For preventing misalignment during cylinder mounting. Simplified.

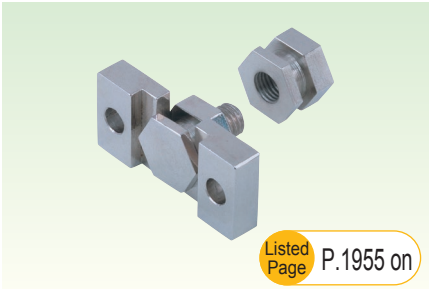

Simplified floating fitting

FK

Series	Page
FK	1956

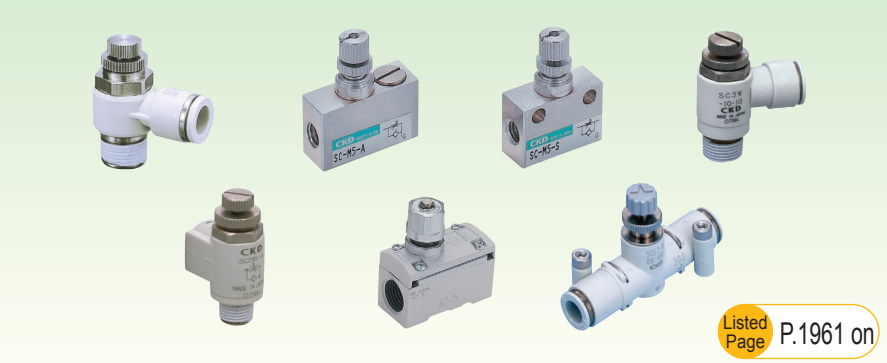

Speed controller

With dial

Series	Port size	Features	Page
DSC	M5, R1/8, 1/4, 3/8, 1/2	Enables easy control of cylinder speed values	1966

Needle valve with adjusting dial

Series	Port size	Features	Page
DVL	R1/8, 1/4, 3/8	Visible flow rate adjustment control achieved	1980

Elbow/push-in fitting

Series	Port size	Features	Page
SC3W	M3, M5, R1/8, 1/4, 3/8, 1/2	Push-in fitting ø3.2 to ø12	1988

Universal/push-in fitting

Series	Port size	Features	Page
SC3U	M3, M5, R1/8, 1/4, 3/8, 1/2	Push-in fitting ø3.2 to ø12	1992

Line type/with push-in fitting

Series	Port size	Features	Page
SCL2	ø1.8,ø4,ø6,ø8,ø10,ø12	Applicable to the remote centralized control of actuators	1998

In/out line type/with push-in fitting

Series	Port size	Features	Page
SCD2	ø1.8,ø4,ø6,ø8,ø10,ø12	Enables flow control for both air supply and exhaust	1998

Needle valve/line type with push-in fitting

Series	Port size	Features	Page
SCL2-N	ø4,ø6,ø8	Flow rate adjustment needle valve with non-scatter grease. Usable with clean-room specs/oil-prohibited specs	2002

Stainless steel anti-corrosion

Series	Port size	Features	Page
SC3P	M5, R1/8, R1/4, R3/8, R1/2	Speed control valve with anti-corrosive stainless steel body	2008

Direct piping/elbow

Series	Port size	Features	Page
SC3R	M5, Rc1/8, 1/4, 3/8, 1/2	Direct piping, L-shape rotation M5 to Rc1/2	2012

.Miniature

Series	Port size	Features	Page
SC	M3, M5	Compact, lightweight, and space saving	2014

Miniature fine speed

Series	Port size	Features	Page
SC-M5-*-F	M5	For fine speed adjustment of fine speed cylinder and air operated valve	2014

Miniature in/out

Series	Port size	Features	Page
SCD	M3, M5	Enables flow control for both air intake and exhaust	2016

Medium bore size

Series	Port size	Features	Page
SC1	Rc1/8, 1/4, 3/8, 1/2	Applicable to general medium bore sizes	2020

Large bore size

Series	Port size	Features	Page
SC	Rc3/4, 1, 1 1/4, 1 1/2, 2	Applicable to general large bore sizes	2022

Outdoor Series

Series	Port size	Features	Page
NEW SC1-W	Rc1/4, 3/8, 1/2	Applicable for outdoor use	2024

Guide to model changes

The series listed in this catalog have undergone a model changeover with these new series. Consider these new series when making selections.

■ Rodless cylinder

SRL2

Old series

■ Rodless cylinder

SRL3

New series

■ High precision guided rodless cylinder

SRG

Old series

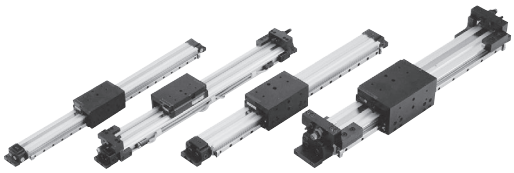

■ High precision guided rodless cylinder

SRG3

New series

SRM

Old series

SRM3

New series

■ Rodless cylinder with brake

SRT

Old series

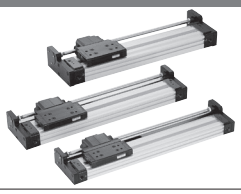

■ Rodless cylinder with brake

SRT3

New series

■ Clamp cylinder

CAC3

Old series

■ Clamp cylinder

CAC4

New series

■ Position locking clamp cylinder

UCAC

Old series

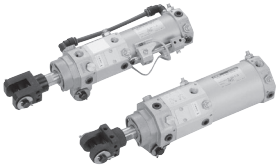

■ Position locking clamp cylinder

UCAC2

New series

■ Linear slide cylinder

LCS

Old series

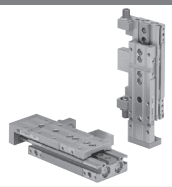

■ Linear slide cylinder

LCR

New series

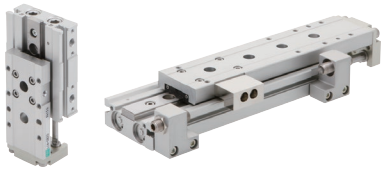

■ Pencil shaped cylinder

SCP*2

Old series

■ Pencil shaped cylinder

SCP*3

New series

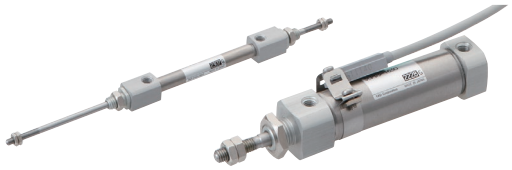

■ Large bore size cylinder

SCS

Old series

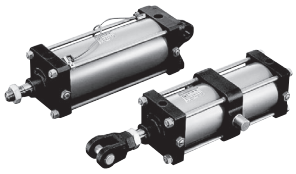

■ Large bore size cylinder

SCS2

New series

■ Brake cylinder (large bore size)

JSC3

Old series

■ Brake cylinder (large bore size)

JSC4

New series

■ Compact cylinder

SMD2

Old series

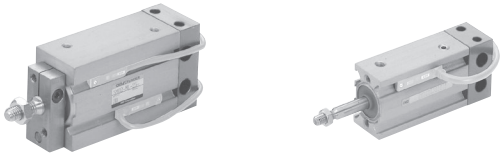

■ Compact cylinder

SMG

New series

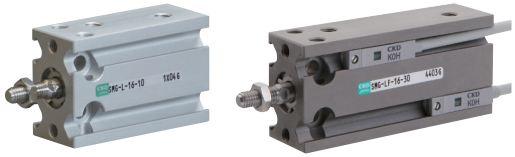

■ Rotary clamp cylinder

RCS

Old series

■ Rotary clamp cylinder

RCS2

New series

Guide to CKD's CAD data

How to use CKD's CAD data

CKD's CAD data is provided as follows for your use in CAD design.

2D CAD data

Types of compatible CAD

- DXF
- Dedicated CAD types

3D CAD data

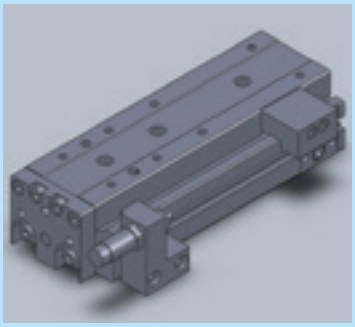

Types of compatible CAD

- DXF
- IGES
- SAT
- Parasolid
- Dedicated CAD types

Homepage

Catalog PDFs and CAD data of CKD products are available for download.

https://www.ckd.co.jp/en/

For PDF and DXF data of the general catalogs

CKD Website Component Products > **Materials: Download digital catalogs/catalog PDFs**

For PDF and DXF data of new products

CKD Website Component Products > **Search for a product from the product list**

For 2D/3D CAD data

CKD Website Component Products > **Materials: Download 2D CAD data/3D CAD data**

Guide to the model selection system

How to use the model selection system

The CKD system supports selection of the following items.
For your use during model selection and design.

Available on our website

This system is used to select products according to your application and working conditions.

*Downloading Software may not be possible due to your security settings. If that is the case, contact CKD.

Selection results are linked with catalog PDFs and CAD data!

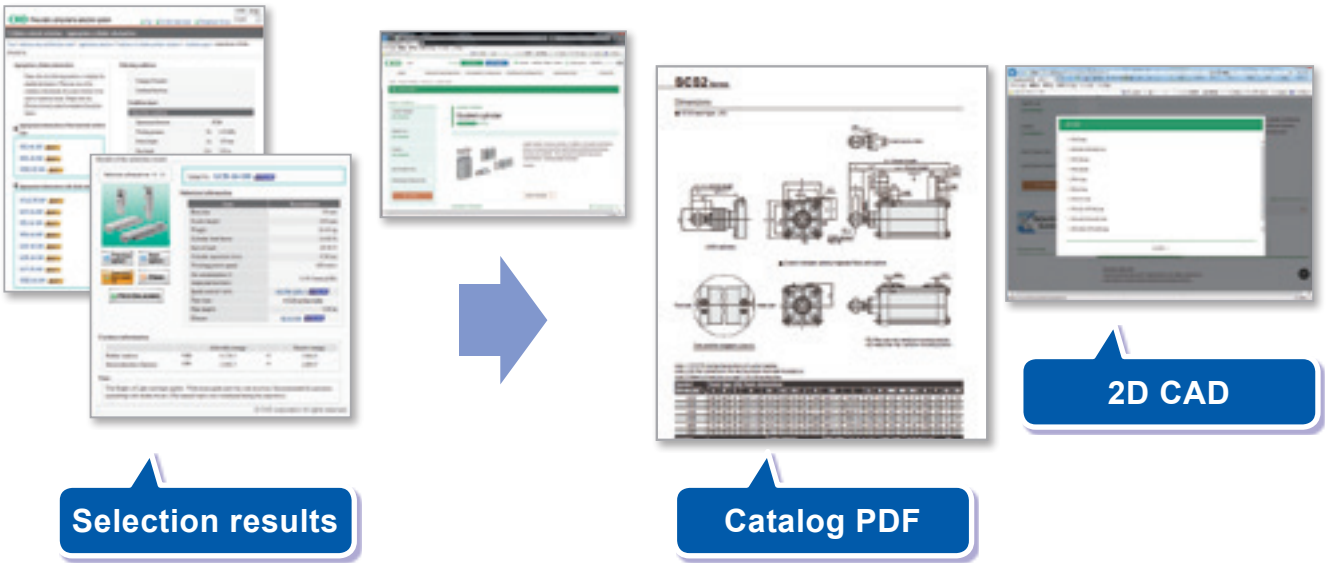

Registration not required - available at any time!

A variety of services such as CKD product catalogs, PDF, CAD data and model selection are available. Feel free to try them.

https://www.ckd.co.jp/en/

3 Search by bore size

Series name	Variation	Switch	2.5	4	6	8	10
Pencil shaped cylinder ● Contents/page 3, series variation/ page 4	SCPS (single acting/push)	Not available	●	●			
	SCPS3 (single acting/push)	Available			●		●
	SCPH3 (single acting/pull)	Available			●		●
	SCPD3 (double acting/single rod)	Available			●		●
	SCPD3-F (double acting/fine speed)	Available			●		●
	SCPD3-O (double acting/low speed)	Available			●		●
	SCPD3-*C (double acting/rubber-air cushioned)	Available			●		●
	SCPD3-T (double acting/heat resistance)	Not available			●		●
	SCPD3-D (double acting/double rod)	Available			●		●
	SCPD3-D T (double acting/double rod/heat resistance)	Not available			●		●
	SCPD3-Z (double acting/with speed controller)	Available					●
	SCPS3-M (single acting/push/rotation-stop)	Available					●
	SCPD3-M (double acting/rotation-stop)	Available					●
	SCPD3-K (double acting/high load)	Available			●		●
	SCPS3-V (single acting/with valve)	Available					●
	SCPD3-V (double acting/with valve)	Available					●
Small bore size cylinder ● Contents/P81/ Series variation/ P82	CMK2 (double acting/single rod)	Available					
	CMK2-S (single acting/push)	Available					
	CMK2-SR (single acting/pull)	Available					
	CMK2-D (double acting/double rod)	Available					
	CMK2-B (double acting/back to back)	Available					
	CMK2-F (double acting/fine speed)	Available					
	CMK2-P (double acting/stroke adjustable/push)	Available					
	CMK2-R (double acting/stroke adjustable/pull)	Available					
	CMK2-M (double acting/rotation-stop)	Available					
	CMK2-C (double acting/air cushioned)	Available					
	CMK2-*C (double acting/rubber-air cushioned)	Available					
	CMK2-Z (double acting/integrated speed controller)	Available					
	CMK2-H (double acting/low hydraulic)	Available					
	CMK2-T (double acting/heat resistance)	Not available					
	CMK2-Q (double acting/position locking)	Available					
	CMK2-$^{G2}_{G3}$(double acting/coolant proof)	Available					
	CMK2-J$^{G2}_{G3}$ (Double acting/Stainless steel)	Available					
Medium bore size cylinder ● Contents/P205/Series variation/p206	CMA2 (double acting/single rod)	Available					
	CMA2-E (double acting/direct mounting)	Available					
Round shaped Cylinder ● Contents/p227/series variation/ p228	SCM (double acting/single rod)	Available					
	SCM-X (single acting/push)	Available					
	SCM-Y (single acting/pull)	Available					
	SCM-D (double acting/double rod)	Available					
	SCM-B (double acting/back to back)	Available					
	SCM-W (double acting/two-stage)	Available					
	SCM-W4 (double acting/tandem)	Available					
	SCM-P (double acting/stroke adjustable/push)	Available					
	SCM-R (double acting/stroke adjustable/pull)	Available					
	SCM-M (double acting/rotation-stop)	Available					
	SCM-LD (double acting/direct mounting foot)	Available					
	SCM-F (double acting/fine speed)	Available					

Bore size (ø)																			Page
12	15	16	20	25	30	32	40	50	63	75	80	100	125	140	160	180	200	250	
																			I-16
		●																	I-16
		●																	I-16
		●																	I-8
		●																	I-34
		●																	I-40
		●																	I-28
		●																	I-26
		●																	I-44
		●																	I-44
		●																	I-50
		●																	I-56
		●																	I-56
		●																	I-64
		●																	I-70
		●																	I-70
			●	●		●	●												I-86
			●	●		●	●												I-100
			●	●		●	●												I-106
			●	●		●	●												I-154
			●	●		●	●												I-160
			●	●		●	●												I-148
			●	●		●	●												I-112
			●	●		●	●												I-118
			●	●		●	●												I-166
			●	●		●	●												I-136
			●	●		●	●												I-128
			●	●		●	●												I-172
			●	●		●	●												I-178
			●	●		●	●												I-124
			●	●		●	●												I-142
			●	●		●	●												I-182
			●	●		●	●												I-188
			●		●		●												I-208
			●		●		●												I-222
			●	●		●	●	●	●		●	●							I-232
			●	●		●	●												I-254
			●	●		●	●												I-260
			●	●		●	●	●	●		●	●							I-308
			●	●		●	●	●	●										I-316
			●	●		●	●	●	●										I-322
			●	●		●	●	●	●										I-328
			●	●		●	●	●	●										I-266
			●	●		●	●	●	●										I-272
			●	●		●	●	●	●										I-334
			●	●		●	●	●	●										I-340
			●	●		●	●												I-292

3 Search by bore size

Series name	Variation	Switch	2.5	4	6	8	10	
Round shaped Cylinder ● Contents/p227/series variation/ p228	SCM-O (double acting/low speed)	Available						
	SCM-U (double acting/low friction)	Available						
	SCM-T (double acting/heat resistance)	Not available						
	SCM-Q (double acting/position locking)	Available						
Tie rod cylinder ● Contents/p351/series variation/ p354	SCG (double acting/single rod)	Available						
	SCG-Q (double acting/position locking)	Available						
	SCG-O (double acting/low speed)	Available						
	SCG-U (double acting/low friction)	Available						
	SCG-D (double acting/double rod)	Available						
	SCG-M (double acting/rotation-stop)	Available						
	SCG-G (double acting/heavy duty scraper)	Available						
	SCG-G2,G3 (double acting/coolant proof)	Available						
	SCG-G4 (double acting/anti-spatter adherence)	Available						
Medium bore size cylinder ● Contents/p443/Series variation/ p444	SCA2 (double acting/single rod)	Available						
	SCA2-D (double acting/double rod)	Available						
	SCA2-B (double acting/back to back)	Available						
	SCA2-W (double acting/two-stage)	Available						
	SCA2-P (double acting/stroke adjustable/push)	Available						
	SCA2-R (double acting/stroke adjustable/pull)	Available						
	SCA2-K (double acting/steel tube)	Not available						
	SCA2-H (double acting/low hydraulic)	Available						
	SCA2-T (double acting/heat resistance)	Available						
	SCA2-O (double acting/low friction)	Available						
	SCA2-U (double acting/low friction)	Available						
	SCA2-G (double acting/rubber scraper)	Available						
	SCA2-Q2 (double acting/position locking)	Available						
	SCA2-V (double acting/with valve)	Available						
	SCA2-$^{G2}_{G3}$ (double acting/coolant proof)	Available						
	SCA2$^{G1}_{G4}$ (double acting/coil scraper/anti-spatter adherence)	Available						
Medium bore size cylinder ● Contents/p621/series variation/ p622	SCS2 (double acting/single rod/lubrication)	Not available						
	SCS2-N (double acting/single rod/no-lubrication)	Available						
	SCS2-D (double acting/double rod)	Available						
	SCS2-ND (double acting/double rod/no-lubrication)	Available						
	SCS2-B (double acting/back to back)	Not available						
	SCS2-W (double acting/two-stage)	Not available						
	SCS2-P (double acting/stroke adjustable)	Not available						
	SCS2-H (double acting/low hydraulic)	Available						
	SCS2-T (double acting/heat resistance)	Not available						
	SCS2-G (double acting/rubber scraper)	Not available						
Compact cylinder with valve ● Contents/p675, series variation/	CKV2 (double acting/single rod/with valve)	Available						
	CKV2-M (double acting/rotation-stop/with valve)	Available						

Bore size (ø)																			Page
12	15	16	20	25	30	32	40	50	63	75	80	100	125	140	160	180	200	250	
			●	●		●	●	●	●		●								I-298
			●	●		●	●	●	●		●	●							I-302
			●	●		●	●	●	●		●	●							I-278
			●	●		●	●	●	●		●	●							I-282
						●	●	●	●		●	●							I-358
						●	●	●	●		●	●							I-374
						●	●	●	●		●	●							I-396
						●	●	●	●		●	●							I-402
						●	●	●	●		●	●							I-406
						●	●	●	●										I-412
						●	●	●	●		●	●							I-418
							●	●	●		●	●							I-424
						●	●	●	●		●	●							I-430
							●	●	●		●	●							I-450
							●	●	●		●	●							I-540
							●	●	●		●	●							I-548
							●	●	●		●	●							I-556
							●	●	●		●	●							I-472
							●	●	●		●	●							I-480
							●	●	●		●	●							I-564
							●	●	●		●	●							I-568
							●	●	●		●	●							I-488
							●	●	●		●	●							I-526
							●	●	●		●	●							I-534
							●	●	●		●	●							I-576
							●	●	●		●	●							I-494
							●	●	●		●	●							I-596
							●	●	●		●	●							I-584
							●	●	●		●	●							I-590
													●	●	●	●	●	●	I-626
													●	●	●	●	●	●	I-626
													●	●	●	●	●	●	I-648
													●	●	●	●	●	●	I-648
													●	●	●	●	●	●	I-654
													●	●	●	●	●	●	I-658
													●	●	●	●	●	●	I-640
													●	●	●	●	●	●	I-662
													●	●	●	●	●	●	I-644
													●	●	●	●	●	●	I-668
			●	●		●	●												I-680
			●	●		●	●												I-692

3 Search by bore size

Series name	Variation	Switch	2.5	4	6	8	10	
Cylinder with valve Short total length with cushion ● Contents/p703/series variation/ p704	CAV2-S(double acting/double solenoid/lubrication)	Available						
	COVP2-S(double acting/single solenoid/pushed out when energized/lubrication)	Available						
	COVN2-S(double acting/single solenoid/retracted in when energized/lubrication))	Available						
	CAV2-NS (double acting/double solenoid/no-lubrication)	Available						
	COVP2-NS(double acting/single solenoid/pushed out when energized/no-lubrication)	Available						
	COVN2-NS(double acting/single solenoid/retracted in when energized/no-lubrication)	Available						
Super compact Cylinder ● Contents/p745/Series variation/ P748	SSD2 (double acting/single rod)	Available						
	SSD2-K (double acting/high load)	Available						
	SSD2-L (double acting/long stroke)	Available						
	SSD2-X (single acting/push)	Available						
	SSD2-Y (single acting/pull)	Available						
	SSD2-T1 (double acting/heat resistance)	Not available						
	SSD2-T1L (double acting/with heat resistant cylinder switch)	Available						
	SSD2-K-*C (double acting/high load/rubber-air cushioned)	Available						
	SSD2-Q (double acting/position locking)	Available						
	SSD2-F (double acting/fine speed)	Available						
	SSD2-KF (double acting/high load/fine speed)	Available						
	SSD2-O (double acting/low speed)	Available						
	SSD2-KU (double acting/high load/low friction)	Available						
	SSD2-D (double acting/double rod)	Available						
	SSD2-B (double acting/back to back)	Available						
	SSD2-W (double acting/two-stage)	Available						
	SSD2-M (double acting/rotation-stop)	Available						
	SSD2-DM (double acting/double rod/rotation-stop)	Available						
	SSD2-G (double acting/rubber scraper)	Available						
	SSD2-$^{G2}_{G3}$(Double acting/coolant proof)	Available						
	SSD2-$^{KG2}_{KG3}$ (double acting/high load/coolant proof)	Available						
	SSD2-G1 (double acting/coil scraper)	Available						
	SSD2-G4 (double acting/anti-spatter adherence)	Available						
	SSD2-KG1 (double acting/high load/coil scraper)	Available						
	SSD2-KG4 (double acting/high load/anti-spatter adherence)	Available						
	SSD2-DG1 (double acting/double rod/coil scraper)	Available						
	SSD2-DG4 (double acting/double rod/anti-spatter adherence)	Available						
	SSD2-G5 (double acting/environment-resistant scraper)	Available						
	SSD2-KG5 (double acting/high load/environment-resistant scraper)	Available						
	SSD2-L4 (double acting/with strong magnetic field proof switch)	Available						
	SSD2-G1L4 (double acting/with strong magnetic field proof switch/with coil scraper)	Available						
	SSD2-KL4 (double acting/high load/with strong magnetic field proof switch)	Available						
	SSD2-KG1L4 (double acting/high load/with strong magnetic field proof switch/with coil scraper)	Available						
	SSD2-P7* (double acting/clean-room specifications)	Available						
Guided super Compact cylinder ● Contents/p1065/ Series variation/P1067	SSG (double acting/single rod)	Available						

Bore size (ø)																			Page
12	15	16	20	25	30	32	40	50	63	75	80	100	125	140	160	180	200	250	
								●		●		●							I-710
								●		●		●							I-710
								●		●		●							I-710
								●		●		●							I-710
								●		●		●							I-710
								●		●		●							I-710
●		●	●	●		●	●	●	●		●	●	●	●	●	●	●		I-752
●		●	●	●		●	●	●	●		●	●							I-776
●		●	●	●		●	●	●	●		●	●							I-792
●		●	●	●		●	●	●											I-802
●		●	●	●		●	●	●											I-802
●		●	●	●		●	●	●	●		●	●							I-820
●		●	●	●		●	●	●	●										I-824
			●	●		●	●	●	●		●	●							I-832
			●	●		●	●	●	●		●	●							I-840
●		●	●	●		●	●	●	●		●	●							I-854
●		●	●	●		●	●	●	●		●	●							I-854
●		●	●	●		●	●	●	●		●	●							I-858
			●	●		●	●	●	●		●	●							I-864
●		●	●	●		●	●	●	●		●	●	●	●	●	●	●		I-868
●		●	●	●		●	●	●	●		●	●							I-890
●		●	●	●		●	●	●	●		●	●							I-902
●		●	●	●		●	●	●	●										I-910
●		●	●	●		●	●	●	●										I-924
			●	●		●	●	●	●		●	●							I-936
		●	●	●		●	●	●	●		●	●							I-946
		●	●	●		●	●	●	●		●	●							I-956
				●		●	●	●	●		●	●							I-966
				●		●	●	●	●		●	●							I-966
				●		●	●	●	●		●	●							I-974
				●		●	●	●	●		●	●							I-974
				●		●	●	●	●		●	●							I-984
				●		●	●	●	●		●	●							I-984
			●	●		●	●	●	●		●	●							I-992
			●	●		●	●	●	●		●	●							I-1002
							●	●	●		●	●							I-1012
							●	●	●		●	●							I-1018
							●	●	●		●	●							I-1024
							●	●	●		●	●							I-1030
●		●	●	●		●	●	●	●		●	●	●	●	●				I-1036
●		●	●	●		●	●	●	●		●	●							I-1068

3 Search by bore size

Series name	Variation	Switch	2.5	4	6	8	10
Super compact Cylinder ● Contents/p1081/series variation/ p1082	SSD (double acting/single rod)	Available					
	SSD-X (single acting/push)	Available					
	SSD-Y (single acting/pull)	Available					
	SSD-D (double acting/double rod)	Available					
	SSD-B (double acting/back to back)	Available					
	SSD-W (double acting/two-stage)	Available					
	SSD-K (double acting/single rod/high load)	Available					
	SSD-K-*C(double acting/high load/rubber-air cushioned)	Available					
	SSD-T (double acting/heat resistance)	Not available					
	SSD-T1L (double acting/with heat resistant cylinder switch)	Available					
	SSD-F (double acting/fine speed)	Available					
	SSD-KF (double acting/high load/fine speed)	Available					
	SSD-O (double acting/low speed)	Available					
	SSD-M (double acting/rotation-stop)	Available					
	SSD-KU (double acting/high load/low friction)	Available					
	SSD-Q (double acting/position locking)	Available					
	SSD-$^{G2}_{G3}$ (double acting/coolant proof)	Available					
	SSD-$^{KG2}_{KG3}$ (double acting/high load/coolant proof)	Available					
	SSD-$^{G1}_{G4}$ (double acting/anti-spatter adherence)	Available					
	SSD-$^{KG1}_{KG4}$ (double acting/high load/anti-spatter adherence)	Available					
	SSD-$^{DG1}_{DG4}$ (double acting/double rod/anti-spatter adherence)	Available					
	SSD- G5 (double acting/environment-resistant scraper)	Available					
	SSD- KG5 (double acting/high load/environment-resistant scraper)	Available					
Cartridge cylinder ● Contents/p1339/series variation/p1339	CAT (single acting/push)	Not available			●		●
Compact direct mounting cylinder ● Contents/p1345/series variation/ p1346	MDC2 (double acting/single rod)	Available		●	●	●	●
	MDC2-X (single acting/push)	Available		●	●	●	●
	MDC2-Y (single acting/pull)	Available		●	●	●	●
	MDC2-F (double acting/fine speed)	Available			●	●	●
Compact cylinder with suction pad ● Contents/p1371/series variation/p1373	MVC (double acting/single rod)	Available			●		●
Compact cylinder ● Contents/p1383/Series variation/ P1385	SMG (double acting/single rod)	Available			●		●
	SMG-X (single acting/push)	Available			●		●
	SMG-Y (single acting/pull)	Available			●		●
	SMG-F(double acting/fine speed)	Available			●		●
	SMG-M(double acting/rotation-stop)	Available			●		●
Small compact cylinder ● Contents/p1415/series variation/ p1418	MSD (double acting/single rod)	Available			●	●	
	MSD-X (single acting/push)	Available			●	●	
	MSD-Y (single acting/pull)	Available			●	●	
	MSD-K (double acting/high load)	Available			●	●	
	MSDG-L (double acting/guided)	Available			●	●	
	MSD-F (double acting/fine speed)	Available			●	●	
	MSD-KF (double acting/high load/fine speed)	Available			●	●	
	MSDG-LF (double acting/guided/high load)	Available					

Bore size (ø)																			Page
12	15	16	20	25	30	32	40	50	63	75	80	100	125	140	160	180	200	250	
		●	●	●		●	●	●	●		●	●	●	●	●				I-1094
●		●	●	●		●	●	●											I-1126
●		●	●	●		●	●	●											I-1126
●		●	●	●		●	●	●	●		●	●	●	●	●				I-1188
●		●	●	●		●	●	●	●		●	●							I-1200
●		●	●	●		●	●	●	●		●	●							I-1210
●		●	●	●		●	●	●	●		●	●							I-1116
			●	●		●	●	●	●		●	●							I-1150
		●	●	●		●	●	●	●		●	●							I-1138
		●	●	●		●	●	●	●										I-1142
●		●	●	●		●	●	●	●		●	●							I-1172
●		●	●	●		●	●	●	●		●	●							I-1172
●		●	●	●		●	●	●	●		●	●							I-1178
●		●	●	●		●	●	●	●										I-1220
●			●	●		●	●	●	●		●	●							I-1184
		●																	I-1160
		●	●	●		●	●	●	●		●	●							I-1230
		●	●	●		●	●	●	●		●	●							I-1238
						●	●	●	●		●	●							I-1246
						●	●	●	●		●	●							I-1254
						●	●	●	●		●	●							I-1264
			●	●		●	●	●	●		●	●							I-1272
			●	●		●	●	●	●		●	●							I-1280
	●																		I-1340
																			I-1348
																			I-1354
																			I-1354
																			I-1364
																			I-1374
		●	●	●		●													I-1386
		●	●	●		●													I-1392
		●	●	●		●													I-1392
		●	●	●		●													I-1400
		●	●	●		●													I-1404
																			I-1422
																			I-1430
																			I-1430
●		●																	I-1440
●		●																	I-1452
																			I-1450
●		●																	I-1450
●		●																	I-1462

3 Search by bore size

Series name	Variation	Switch	2.5	4	4.5	6	8	10
Flat cylinder compact demi ● Contents/p1473/series variation/p1474	FCS (single acting/push)	Available						
	FCH (single acting/pull)	Available						
	FCD (double acting/single rod)	Available						
	FCD-D (double acting/double rod)	Available						
	FCD-K (double acting/cushioned)	Available						
Stopper cylinder ● Contents/p1509/series variation/p1510	STK (double acting/round rod end)	Available						
	STK-Y (single acting/retracted in when energized/round rod end)	Available						
	STK-Y1 (double acting/with spring/round rod end)	Available						
	STK-M (double acting/rod end chamfered type)	Available						
	STK-MY (single acting/pull/rod end chamfered type)	Available						
	STK-MY1 (double acting/with spring/rod end chamfered type)	Available						
	STK-JY (single acting/retracted in when energized/rod end roller)	Available						
	STK-JY1 (double acting/with spring/rod end roller)	Available						
Rodless Cylinder ● Contents/p1569/series variation/p1570	SRL3 (double acting)	Available						
	SRL3-G (double acting/with resin guide)	Available						
	SRL3-Q (double acting/position locking)	Available						
	SRL3-GQ (double acting/with resin guide/position locking)	Available						
High precision guided rodless cylinder ● Contents/p1645/series variation/p1646	SRG3 (double acting)	Available						
High precision guided rodless cylinder ● Contents/p1673/series variation/p1674	SRM3 (double acting)	Available						
	SRM3-Q (double acting/position locking)	Available						
Rodless cylinder with brake ● Contents/p1703/series variation/p1704	SRT3 (double acting)	Available						
Magnet Rodless cylinder ● Contents/p1731/series variation/p1736	MRL2 (double acting/basic)	Available				●		●
	MRL2-G (simplified guide 1-piston)	Available				●		●
	MRL2-W (simplified guide 2-piston)	Available				●		●
	MRL2-F (double acting/Basic type/fine speed)	Available				●		●
	MRL2-GF (simplified guide 1-piston/fine speed)	Available				●		●
	MRL2-WF (simplified guide 2-piston/fine speed)	Available				●		●
Magnet rodless cylinder With high precision guide ● Contents/p1763/series variation/p1765	MRG2 (double acting)	Available						●
Shuttle mover ● Contents/p1783	SM-25	Not available						
Linear slide cylinder ● Contents/p5, series variation/p8	LCM (double acting/single rod)	Available			●	●	●	
	LCM-P (double acting/stroke adjustable/push)	Available			●	●	●	
	LCM-R (double acting/stroke adjustable/pull)	Available			●	●	●	
	LCM-A (double acting/side mounting)	Available			●	●	●	
Linear slide cylinder ● Contents/p53, series variation/p56	LCR (double acting/single rod)	Available				●	●	
	LCR-Q (double acting/position locking)	Available					●	
	LCR-F (double acting/single rod/fine speed)	Available						

Bore size (ø)																			Page
12	15	16	20	25	30	32	40	50	63	75	80	100	125	140	160	180	200	250	
				●		●	●	●	●										I-1480
				●		●	●	●	●										I-1480
				●		●	●	●	●										I-1488
				●		●	●	●	●										I-1494
				●		●	●	●	●										I-1500
			●			●	●	●											I-1512
			●			●	●	●											I-1518
			●			●	●	●											I-1524
			●			●	●	●											I-1530
			●			●	●	●											I-1536
			●			●	●	●											I-1542
			●			●	●	●											I-1548
			●			●	●	●											I-1554
●		●	●	●		●	●	●	●		●	●							I-1574
●		●	●	●		●	●	●	●		●	●							I-1590
●		●	●	●		●	●	●	●		●	●							I-1604
●		●	●	●		●	●	●	●		●	●							I-1614
●		●	●	●															I-1650
				●		●	●		●										I-1676
				●		●	●		●										I-1676
●		●	●	●		●	●	●	●										I-1706
		●	●	●		●													I-1740
		●	●	●		●													I-1740
		●	●	●		●													I-1740
		●	●	●		●													I-1740
		●	●	●		●													I-1740
		●	●	●		●													I-1740
		●		●															I-1766
				●															I-1784
																			II-10
																			II-18
																			II-24
																			II-30
●		●	●	●															II-58
●		●	●	●															II-84
●		●	●	●															II-112

3 Search by bore size

Series name	Variation	Switch	2.5	4	6	8	10
Linear slide cylinder ● Contents/p135/series variation/p138	LCG (double acting/single rod)	Available			●	●	
	LCG-Q (double acting/position locking)	Available				●	
Linear slide cylinder ● Contents/p199/series variation/p202	LCW (double acting/single rod)	Available					
	LCW-Q (double acting/position locking)	Available					
Linear slide cylinder ●Contents/p249/series variation/p252	LCX (double acting/single rod)	Available					
	LCX-Q (double acting/position locking)	Available					
	LCX-P7* (double acting/clean-room specifications)	Available					
	LCX-*L (double acting/long stroke)	Available					
	LCX-Q-*L (double acting/position locking/long stroke)	Available					
	LCX-*L-P7* (double acting/clean-room specifications/long stroke)	Available					
Guided cylinder ● Contents/p309/series variation/p310	STM-M/B (double acting/single rod)	Available			●		●
	STM-M/B -P7* (double acting/clean-room specifications)	Available			●		●
Guided cylinder ● Contents/p329/series variation/p332	STG-$^{M}_{B}$ (double acting/single rod)	Available					
	STG-$^{M}_{B}$-*C (double acting/rubber-air cushioned)	Available					
	STG-$^{M}_{B}$C (double acting/air cushioned)	Available					
	STG-$^{M}_{B}$Q (double acting/position locking)	Available					
	STG-$^{M}_{B}$G,G1 (double acting/rubber scraper/coil scraper)	Available					
	STG-$^{M}_{B}$G2, G3 (double acting/coolant proof)	Available					
	STG-$^{M}_{B}$G4 (double acting/anti-spatter adherence)	Available					
	STG-MG5 (double acting/environment-resistant scraper)	Available					
Guided cylinder ● Contents/p441/series variation/p442	ST$^{S}_{L}$-$^{M}_{B}$ (double acting/single rod)	Available			●		
	ST$^{S}_{L}$-$^{M}_{B}$F (double acting/fine speed)	Available			●		
	ST$^{S}_{L}$-$^{M}_{B}$O (double acting/low speed)	Available			●		
	ST$^{S}_{L}$-$^{MG}_{MG1}$ (double acting/scraper)	Available					
	ST$^{S}_{L}$-$^{M}_{B}$T (double acting/heat resistance)	Not available					
	ST$^{S}_{L}$-$^{M}_{B}$T2 (double acting/packing material fluoro rubber)	Available					
	ST$^{S}_{L}$-$^{M}_{B}$P (double acting/stroke adjustable/push)	Available			●		
	ST$^{S}_{L}$-$^{M}_{B}$Q (double acting/position locking)	Available					
	ST$^{S}_{L}$-$^{M}_{B}$V (double acting/valve equipped)	Available					
	ST$^{S}_{L}$-$^{M}_{B}$C (double acting/air cushioned)	Available					
	ST$^{S}_{L}$-$^{M}_{B}$-*C (double acting/rubber-air cushioned)	Available					
	ST$^{S}_{L}$-$^{MG2}_{BG3}$ (double acting/coolant proof)	Available					
	ST$^{S}_{L}$-$^{MG1}_{BG4}$ (double acting/anti-spatter adherence)	Available					
Twin rod Cylinder ● Contents/p575/series variation/p576	STR2-$^{M}_{B}$ (Double acting/single rod)	Available			●		●
	STR2-$^{M}_{B}$F (double acting/fine speed)	Available					●
	STR2-$^{M}_{B}$O (double acting/low speed)	Available			●		●
	STR2-$^{M}_{B}$D (double acting/double rod)	Available			●		●
	STR2-$^{M}_{B}$Q (double acting/position locking)	Available					
Unit cylinder ● Contents/p635/series variation/p636	UCA2 (double acting/single rod/metal bush bearing)	Available					●
	UCA2-B (double acting/single rod/ball bearing)	Available					●

Bore size (ø)																			Page
12	15	16	20	25	30	32	40	50	63	75	80	100	125	140	160	180	200	250	
●		●	●	●															II-140
●		●	●	●															II-164
●		●	●																II-204
●		●	●																II-224
				●		●													II-254
				●		●													II-264
				●		●													II-270
				●		●													II-276
				●		●													II-286
				●		●													II-292
																			II-314
																			II-320
●		●	●	●		●	●	●	●		●								II-336
						●	●	●	●										II-350
		●	●	●		●	●	●	●										II-358
			●	●		●	●	●	●										II-368
			●	●		●	●	●	●										II-376
			●	●		●	●	●	●										II-382
							●	●	●										II-388
			●	●		●	●	●	●		●	●							II-394
●		●	●	●		●	●	●	●		●	●							II-448
●		●	●	●		●	●	●	●		●								II-470
●		●	●	●		●	●	●	●		●								II-476
			●	●		●	●	●	●		●								II-480
●		●	●	●		●	●	●	●		●								II-486
●		●	●	●		●	●	●	●		●								II-492
●		●	●	●		●	●	●	●		●								II-500
			●	●		●	●	●	●		●								II-512
			●	●		●	●	●	●										II-514
				●		●	●	●	●		●								II-518
						●	●	●	●		●								II-526
			●	●		●	●	●	●		●								II-536
								●	●		●								II-544
		●	●	●		●													II-580
		●	●	●		●													II-592
		●	●	●		●													II-602
		●	●	●		●													II-610
		●	●	●		●													II-612
		●		●		●													II-640
		●		●		●													II-650

3 Search by bore size

Series name	Variation	Switch	2.5	4	4.5	6	8	10
Brake cylinder ● Contents/p671/series variation/p672	ULKP (double acting)	Available						
	ULK (double acting/single rod)	Available						
	ULK-V (double acting/with valve)	Available						
Brake cylinder small bore size/crimping ● Contents/p701/series variation/p702	JSK2 (double acting/single rod)	Available						
	JSK2-V (double acting/with valve)	Available						
Brake cylinder small bore size/disassembling ● Contents/p701/series variation/p702	JSM2 (double acting/single rod)	Available						
	JSM2-V (double acting/with valve)	Available						
Tie rod cylinder with brake ● Contents/p737/series variation/p740	JSG (double acting/single rod)	Available						
	JSG-V (double acting/with valve for brake release)	Available						
Brake cylinder medium and large bore size ● Contents/p767/series variation/p768	JSC3(-S)/JSC4(double acting/single rod/low pressure release)	Available						
	JSC3-V (S) (double acting/with valve for brake/low pressure release)	Available						
	JSC3-H(S)/JSC4-H (double acting/low hydraulic/low pressure release)	Available						
	JSC3-T(S)/JSC4-T(double acting/heat resistance/low pressure release)	Not available						
Position locking compact cylinder ● Contents/p841/series variation/p844	USSD (double acting/single rod)	Available						
	USSD-K (double acting/single rod/high load)	Available						
Free position locking flat cylinder ● Contents/p885/series variation/p887	UFDC-KL (double acting/single rod/cushioned)	Available						
Free position locking medium bore size cylinders ● Contents/p901/series variation/p902	USC (double acting/single rod)	Available						
	USC-G1 (double acting/with coil scraper)	Available						
High energy absorption cylinder ● Contents/p957/series variation/p958	HCM (double acting)	Available						
High speed cylinder ● Contents/p975/series variation/p976	HCA (double acting/single rod)	Available						
Clamp cylinder ● Contents/p1005/series variation/p1006	CAC4 (double acting/single rod)	Available						
	CAC4-G4 (double acting/anti-spatter adherence)	Available						
Position locking clamp cylinder ● Contents/p1029/series variation/p1029	UCAC2 (double acting)	Available						
Lightweight clamp cylinder ● Contents/p1043/series variation/p1045	CAC-N (Double acting/single rod)	Available						
Position locking and lightweight clamp cylinder ● Contents/p1043/series variation/p1045	UCAC-N (Double acting/single rod)	Available						
Rotary clamp cylinder ● Contents/p1063/series variation/p1066	RCS2 (double acting/single rod)	Available						
	RCS2-T2 (double acting/Packing material fluoro rubber)	Available						
	RCS2-G4 (double acting/Anti-spatter adherence)	Available						
Rotary clamp cylinder ● Contents/p1095/series variation/p1095	RCC2 (double acting/single rod)	Available						
	RCC2-G4 (Double acting/Anti-spatter adherence)	Available						
Pin clamp cylinder ● Contents/p1117	PCC (double acting/single rod)	Available						
	PCC-Q (double acting/position locking)	Available						
High power cylinder ● Contents/p1137/series variation/p1142	SHC (double acting/double force)	Available						
	SHC-K (double acting/quadruple force)	Available						
Guideless cylinder ● Contents/p1193/series variation/p1196	GLC (double acting)	Available						
Robot cylinder ● Contents/p1213/series variation/p1214	MFC (double acting/single rod)	Available						
	MFC-K (double acting/high load)	Available						
	MFC-B (double acting/with brake)	Available						
	MFC-BK (double acting/with brake/high load)	Available						
	MFC-BS (double acting/with brake sensor)	Not available						
	MFC-BSK (double acting/with brake sensor/high load)	Not available						
Balancer unit ● Contents/p1253/series variation/p1256	BBS-A(Auto pressure adjustment)	Available						
	BBS-O(Fixed pressure adjustment)	Available						

Bore size (ø)																			Page
12	15	16	20	25	30	32	40	50	63	75	80	100	125	140	160	180	200	250	
		●																	II-674
			●	●		●	●												II-680
			●	●		●	●												II-680
			●	●		●	●												II-706
			●	●		●	●												II-706
			●		●		●												II-720
			●		●		●												II-720
							●	●	●		●	●							II-742
							●	●	●		●	●							II-742
							●	●	●		●	●	●	●	●	●			II-774
							●	●	●		●	●							II-810
							●	●	●		●	●	●	●	●	●			II-818
							●	●	●		●	●	●	●	●	●			II-830
			●	●		●	●	●	●		●	●							II-846
			●	●		●	●	●	●		●	●							II-846
				●		●	●	●	●										II-888
							●	●	●		●	●							II-904
							●	●	●		●	●							II-904
			●	●		●	●	●	●										II-960
			●	●		●	●	●	●		●	●							II-978
							●	●	●		●								II-1008
							●	●	●		●								II-1020
								●	●										II-1030
						●	●												II-1046
						●	●												II-1052
●		●	●	●		●	●	●	●										II-1068
●		●	●	●		●	●	●	●										II-1078
						●	●	●	●										II-1084
		●	●	●		●	●	●	●										II-1096
			●	●		●	●	●	●										II-1108
								●											II-1118
								●											
							●	●	●		●	●							II-1144
							●	●	●		●	●							II-1154
							●	●	●		●	●							II-1198
					●		●	●	●		●								II-1218
					●		●	●	●		●								II-1218
					●		●	●	●		●								II-1226
					●		●	●	●		●								II-1226
					●		●	●	●		●								II-1236
					●		●	●	●		●								II-1236
								●	●		●	●							II-1258
								●	●		●	●							II-1270

4 Search by specifications and variation

Single acting (push/pull)

Series/model series name		Bore size (ø)	Remarks	Page
CAT	Cartridge cylinder	6 to 15	Push type	I-1340
CMK2-S	Medium bore size cylinder	20 to 40	Push type	I-100
CMK2-SR	Medium bore size cylinder	20 to 40	Pull type	I-106
FCH	Flat compact cylinder	25 to 63	Pull type	I-1480
FCS	Flat compact cylinder	25 to 63	Push type	I-1480
MDC2-X	Small direct mounting cylinder	4 to 10	Push type	I-1354
MDC2-Y	Small direct mounting cylinder	4 to 10	Pull type	I-1354
MSD-X	Small compact cylinder	6/8	Push type	I-1430
MSD-Y	Small compact cylinder	6/8	Pull type	I-1430
SCM-X	Round shaped cylinder	20 to 40	Push type	I-254
SCM-Y	Round shaped cylinder	20 to 40	Pull type	I-260
SCPH3	Pencil shaped cylinder	6 to 16	Pull type	I-16
SCPS	Pencil shaped cylinder	2.5/4	Push type	I-16
SCPS3	Pencil shaped cylinder	6 to 16	Push type	I-16
SMG-X	Compact cylinder	6 to 32	Push type	I-1392
SMG-Y	Compact cylinder	6 to 32	Pull type	I-1392
SSD2-X	Compact cylinder	12 to 50	Push type	I-802
SSD2-Y	Compact cylinder	12 to 50	Pull type	I-802
SSD-X	Compact cylinder	12 to 50	Push type	I-1126
SSD-Y	Compact cylinder	12 to 50	Pull type	I-1126
STK-JY	Stopper cylinder	20 to 50	Pull type	I-1548
STK-MY	Stopper cylinder	20 to 50	Pull type	I-1536
STK-Y	Stopper cylinder	20 to 50	Pull type	I-1518

Double acting/single rod

Series/model series name		Bore size (ø)	Remarks	Page
CAC-N	Lightweight clamp cylinder	32/40		II-1046
CAC4	Clamp cylinder	40 to 80		II-1008
CMA2	Medium bore size cylinder	20 to 40		I-208
CMK2	Medium bore size cylinder	20 to 40		I-86
FCD	Flat compact cylinder	25 to 63		I-1480
GLC	Guideless cylinder	40 to 100		II-1198
HCA	High speed cylinder	20 to 100		II-978
HCM	High energy absorption cylinder	20 to 63		II-960
JSC3(-N)/JSC4-N	Brake cylinder	25 to 63/125 to 180		II-774
JSG	Tie rod cylinder with brake	40 to 100		II-742
JSK2	Brake cylinder (small bore size/caulking)	20 to 40		II-706
JSM2	Brake cylinder (small bore size/disassembling)	20 to 40		II-720
LCR	Linear slide cylinder	8 to 25		II-58
LCG	Linear slide cylinder	6 to 25		II-140
LCM	Linear slide cylinder	4.5 to 8		II-10
LCW	Linear slide cylinder	12 to 20		II-204
LCX	Thin linear slide cylinder	25/32		II-254
MDC2	Small direct mounting cylinder	4 to 10		I-1348
MFC	Robot cylinder	30 to 80		II-1218
MSD	Small compact cylinder	6/10		I-1422
MVC	Small cylinder with suction pad	6/10		I-1374
PCC	Pin clamp cylinder	50		II-1118
RCS2	Rotary clamp cylinder	12 to 63		II-1068
RCC2	Rotary clamp cylinder	16 to 63		II-1096
SCA2	Medium bore size cylinder	40 to 100		I-450
SCG	Tie rod cylinder	32 to 100		I-358
SCM	Round shaped cylinder	20 to 100		I-232
SCPD3	Pencil shaped cylinder	6 to 16		I-8
SCS2	Large bore size cylinder	125 to 250	Lubrication	I-626
SCS2-N	Large bore size cylinder	125 to 250	No-lubrication	I-626
SHC	High power cylinder	40 to 100		II-1144
SMG	Compact cylinder	6 to 32		I-1386
SSD2	Compact cylinder	12 to 200		I-752
SSG	Guided super compact cylinder	12 to 100		I-1068
SSD	Compact cylinder	12 to 160		I-1094
UCAC-N	Position locking and lightweight clamp cylinder	32/40		II-1052
STM	Guided cylinder	6/10		II-314
UCAC2	Position locking clamp cylinder	50/63		II-1030
UFCD	Free position locking flat cylinder	25 to 63		II-888
ULK	Brake cylinder	20 to 40		II-680
ULKP	Brake cylinder	16		II-674
USC	Free position locking medium bore size cylinder	40 to 100		II-904
USSD	Position locking compact cylinder	20 to 100		II-846

4 Search by specifications and variation

Double acting/double rod

Series/model series name		Bore size (ø)	Remarks	Page
CMK2-D	Small bore size cylinder	20 to 40		I-154
FCD-D	Flat compact cylinder	25 to 63		I-1494
SCA2-D	Medium bore size cylinder	40 to 100		I-540
SCG-D	Tie rod cylinder	32 to 100		I-406
SCM-D	Round shaped cylinder	20 to 100		I-308
SCPD3-D	Pencil shaped cylinder	6 to 16		I-44
SCS2-D	Medium bore size cylinder	125 to 250	Lubrication	I-648
SCS2-ND	Medium bore size cylinder	125 to 250	No-lubrication	I-648
SSD2-D	Compact cylinder	12 to 200		I-868
SSD-D	Compact cylinder	12 to 160		I-1188
STR2- D	Twin rod cylinder	6 to 32		II-612

Rodless

Series/model series name		Bore size (ø)	Remarks	Page
SRL3	Rodless cylinder double acting	12 to 100		I-1574
SRL3-G	Rodless cylinder resin guide	12 to 100		I-1590
SRL3-Q	Rodless cylinder with position locking function	12 to 100		I-1604
SRL3-GQ	Rodless cylinder With resin guide/position locking function	12 to 100		I-1614
SRG3	High precision guided rodless cylinder double acting	12 to 25		I-1650
SRM3	High precision guided rodless cylinder double acting	25 to 63		I-1676
SRM3-Q	High precision guided rodless cylinder position locking	25 to 63		I-1676
SRT3	Rodless cylinder with brake Double acting	12 to 63		I-1706
MRL2	Magnet rodless cylinder BasicModel	6 to 32		I-1740
MRL2-G	Magnet rodless cylinder Simplified guide 1-piston	6 to 32		I-1740
MRL2-W	Magnet rodless cylinder Simplified guide 2-piston	6 to 32		I-1740
MRG2	Magnet rodless cylinder With high precision guide	10 to 25		I-1766
SM-25	Shuttle mover	25		I-1784

Rotation-stop

Rotation-stop of piston rod is possible.

Series/model series name		Bore size (ø)	Remarks	Page
CKV2-M	Compact cylinder with valve	20 to 40	Double acting/with valve	I-692
CMK2-M	Small bore size cylinder	20 to 40		I-166
SCG-M	Tie rod cylinder	32 to 63		I-412
SCM-M	Round shaped cylinder	20 to 40		I-334
SCPD3-M	Pencil shaped cylinder	10/16		I-56
SCPS3-M	Pencil shaped cylinder	10/16	Single acting/push	I-56
SMG-M	Compact cylinder	6 to 32		I-1404
SSD-M	Compact cylinder	12 to 63		I-1220
SSD2-M	Compact cylinder	12 to 63		I-910

Fine speed

Realizing smooth ultra low speed operation without stick-slip (1 mm/s up).

Series/model series name		Bore size (ø)	Remarks	Page
CMK2-F	Medium bore size cylinder	20 to 40		I-148
GRC-F	Table rotary actuator	-	Effective torque (N·m) 0.5, 1.0, 2.0, 3.0, 5.0, 8.0	II-1316
LCR-F	Linear slide cylinder	12 to 25		II-112
MDC2-F	Small direct mounting cylinder	6 to 10		I-1364
MRL2-F	Magnet rodless cylinder	6 to 32		I-1740
MSD-F	Small compact cylinder	6/8		I-1450
MSD-KF	Small compact cylinder high load	6 to 16		I-1450
MSDG-LF	Small compact cylinder guided	12/16		I-1462
SCPD3-F	Pencil shaped cylinder	6 to 16		I-34
SCM-F	Round shaped cylinder	20 to 40		I-292
SMG-F	Compact cylinder	6 to 32		I-1400
SSD2-F	Compact cylinder	12 to 100		I-854
SSD2-KF	Compact cylinder high load	12 to 100		I-854
SSD-F	Compact cylinder	12 to 100		I-1172
SSD-KF	Compact cylinder high load	12 to 100		I-1172
ST$^{S}_{L}$-$^{M}_{B}$F	Guided cylinder	8 to 80		II-512
STR2-$^{M}_{B}$F	Twin rod cylinder	10 to 32		II-610

Low speed

Realizing smooth low speed operation without stick-slip (10 mm/s up).

Series/model series name		Bore size (ø)	Remarks	Page
SCG-O	Tie rod cylinder	32 to 100		I-396
SCM-O	Round shaped cylinder	20 to 100		I-298
SCPD3-O	Pencil shaped cylinder	6 to 16		I-40
SSD2-O	Compact cylinder	12 to 100		I-858
SSD-O	Compact cylinder	12 to 100		I-1178
ST$^{S}_{L}$-$^{M}_{B}$O	Guided cylinder	8 to 80		II-514
STR2-$^{M}_{B}$O	Twin rod cylinder	6 to 32		II-602

Low friction

Low friction cylinder which realizes minimum sliding resistance for use with low pressure through high pressure.

Series/model series name		Bore size (ø)	Remarks	Page
SCA2-U	Medium bore size cylinder	40 to 100		I-534
SCG-U	Tie rod cylinder	32 to 100		I-402
SCM-U	Round shaped cylinder	20 to 100		I-302
SSD2-KU	Compact cylinder	20 to 100		I-864
SSD-KU	Compact cylinder	20 to 100		I-1184

Heat resistance

Series/model series name		Bore size (ø)	Remarks	Page
CMK2-T	Medium bore size cylinder	20 to 40		I-124
JSC3-T	Brake cylinder	40 to 100		II-830
SCA2-T	Medium bore size cylinder	40 to 100		I-488
SCM-T	Round shaped cylinder	20 to 100		I-278
SCPD3-DT	Pencil shaped cylinder	6 to 16	Double acting/double rod	I-44
SCPD3-T	Pencil shaped cylinder	6 to 16		I-26
SCS2-T	Large bore size cylinder	125 to 250		I-644
SSD-T	Compact cylinder	12 to 100		I-1138
SSD2-T1	Compact cylinder	12 to 100		I-820
ST$^{S}_{L}$-$^{M}_{B}$T	Guided cylinder	12 to 80		II-476

4 Search by specifications and variation

Integrated speed controller

Series/model series name		Bore size (ø)	Remarks	Page
CMK2-Z	Medium bore size cylinder	20 to 40		I-172
SCPD3-Z	Pencil shaped cylinder	10/16		I-50

High load

Series/model series name		Bore size (ø)	Remarks	Page
MFC-BK	Robot cylinder	30 to 80	With brake	II-1226
MFC-BSK	Robot cylinder	30 to 80	With brake sensor	II-1236
MFC-K	Robot cylinder	30 to 80		II-1218
MSD-K	Small compact cylinder	6 to 16		I-1440
SCPD3-K	Pencil shaped cylinder	6 to 16		I-64
SSD2-K	Compact cylinder	12 to 100		I-776
SSD2-K-*C	Compact cylinder	20 to 100		I-832
SSD-K	Compact cylinder	12 to 100		I-1116
SSD-K-*C	Compact cylinder	32 to 100	With rubber-air cushion	I-1150
USSD-K	Position locking compact cylinder	20 to 100		II-846

Back to back

Two air cylinders integrated as back to back can be individually controlled.

Series/model series name		Bore size (ø)	Remarks	Page
CMK2-B	Medium bore size cylinder	20 to 40		I-160
SCA2-B	Medium bore size cylinder	40 to 100		I-548
SCM-B	Round shaped cylinder	20 to 40		I-316
SCS2-B	Large bore size cylinder	125 to 250		I-654
SSD2-B	Compact cylinder	12 to 100		I-890
SSD-B	Compact cylinder	12 to 100		I-1200

Stroke adjustable

Series/model series name		Bore size (ø)	Remarks	Page
CMK2-P	Medium bore size cylinder	20 to 40	Push	I-112
CMK2-R	Medium bore size cylinder	20 to 40	Pull	I-118
LCM-P	Linear slide cylinder	4.5 to 8	Push	II-18
LCM-R	Linear slide cylinder	4.5 to 8	Pull	II-24
SCA2-P	Medium bore size cylinder	40 to 100	Push	I-472
SCA2-R	Medium bore size cylinder	40 to 100	Pull	I-480
SCM-P	Round shaped cylinder	20 to 40	Push	I-266
SCM-R	Round shaped cylinder	20 to 40	Pull	I-272
SCS2-P	Large bore size cylinder	125 to 250	Push	I-640
ST$^{S}_{L}$-$^{M}_{B}$P	Guided cylinder	8 to 80	Push	II-470

Side installation

Series/model series name		Bore size (ø)	Remarks	Page
LCM-A	Linear slide cylinder	4.5 to 8		II-30

Single acting (push/pull) Single rod Double rod Rodless Rotation-stop Fine speed Low speed Low friction Heat resistance Integrated speed controller
High load Back to back Stroke adjustable Side installation Air cushioned/rubber-air cushioned Low hydraulic Position locking Two-stage Scraper Valve
Tandem Metal bush bearing/ball bearing High precision guide Rechargeable battery Clean-room specifications Copper and PTFE free Coolant proof Anti-spatter adherence

Air cushioned/rubber-air cushioned

Series/model series name		Bore size (ø)	Remarks	Page
CMK2-C	Medium bore size cylinder	20 to 40	With air cushion	I-136
CMK2-*C	Medium bore size cylinder	20 to 40	With rubber-air cushion	I-128
MRL2-*C	Magnet rodless cylinder	6 to 32	With rubber-air cushion	I-1740
SCPD3-*C	Pencil shaped cylinder	6 to 16	With rubber-air cushion	I-28
SSD2-K-*C	Compact cylinder	20 to 100	With rubber-air cushion	I-832
SSD-K-*C	Compact cylinder	32 to 100	High load/with rubber-air cushion	I-1150
STG-$^{M}_{B}$-*C	Guided cylinder	32 to 63		II-350
STG-$^{M}_{B}$C	Guided cylinder	16 to 63		II-358
ST$^{S}_{L}$-$^{M}_{B}$-*C	Guided cylinder	32 to 80	With rubber-air cushion	II-486
ST$^{S}_{L}$-$^{M}_{B}$C	Guided cylinder	25 to 80	With air cushion	II-492

Low hydraulic

Series/model series name		Bore size (ø)	Remarks	Page
CMK2-H	Medium bore size cylinder	20 to 40		I-178
JSC3-H	Brake cylinder	40 to 180		II-818
SCA2-H	Medium bore size cylinder	40 to 100		I-568
SCS2-H	Large bore size cylinder	125 to 250		I-662

Position locking

Piston rod can be mechanically held at the stroke end.

Series/model series name		Bore size (ø)	Remarks	Page
CMK2-Q	Medium bore size cylinder	20 to 40		I-142
LCR-Q	Linear slide cylinder	8 to 25		II-84
LCG-Q	Linear slide cylinder	8 to 25		II-164
LCX-Q	Thin linear slide cylinder	25/32		II-264
LCW-Q	Linear slide cylinder	12 to 20		II-224
PCC-Q	Pin clamp cylinder	50		II-1118
SCA2-Q2	Medium bore size cylinder	40 to 100		I-494
SCG-Q	Tie rod cylinder	32 to 100		I-374
SCM-Q	Round shaped cylinder	20 to 100		I-282
SRL3-GQ	Rodless cylinder	12 to 100	With resin guide	I-1614
SRL3-Q	Rodless cylinder	12 to 100		I-1604
SRM3-Q	Rodless cylinder	25 to 63		I-1676
SSD2-Q	Compact cylinder	20 to 100		I-840
SSD-Q	Compact cylinder	16 to 100		I-1160
STG-$^{M}_{B}$Q	Guided cylinder	20 to 63		II-368
ST$^{S}_{L}$-$^{M}_{B}$Q	Guided cylinder	20 to 80		II-500
STR2-$^{M}_{B}$Q	Twin rod cylinder	16 to 32		II-592
UCAC-N	Position locking and lightweight clamp cylinder	32/40		II-1052
USSD	Position locking compact cylinder	20 to 100	High load	II-846
USSD-K	Position locking compact cylinder	20 to 100		II-846
UFCD	Free position locking flat cylinder	25 to 63		II-888
USC	Free position locking medium bore size cylinder	40 to 100		II-904

4 Search by specifications and variation

Two-stage

Two cylinders are integrated in serial and individually controlled.

Series/model series name		Bore size (ø)	Remarks	Page
SCA2-W	Medium bore size cylinder	40 to 100		I-556
SCM-W	Round shaped cylinder	20 to 40		I-322
SCS2-W	Large bore size cylinder	125 to 250		I-658
SSD-W	Compact cylinder	12 to 100		I-1210
SSD2-W	Compact cylinder	12 to 100		I-902

Scraper

The heavy duty scrapers on the piston and guide rods prevent entry of contaminants.

Series/model series name		Bore size (ø)	Remarks	Page
SCG-G	Tie rod cylinder	32 to 100		I-418
SCA2-G	Medium bore size cylinder	40 to 100		I-576
SCS2-G	Large bore size cylinder	125 to 250		I-668
SSD2-G	Compact cylinder	20 to 100		I-936
STG-$^{MG}_{BG1}$	Guided cylinder	20 to 63		II-376
ST$^{S}_{L}$-$^{MG}_{BG1}$	Guided cylinder	20 to 80		II-518
USC-G1	Free position locking medium bore size cylinder	40 to 100		II-904

Valve

Series/model series name		Bore size (ø)	Remarks	Page
CAV2	Cylinder with valve	50 to 100	Double acting/double solenoid/lubrication	I-710
CAV2-N	Cylinder with valve	50 to 100	Double acting/double solenoid/no lubrication	I-710
CAV2-NS	Cylinder with valve/cushioned short overall length	50 to 100	Double acting/double solenoid/no lubrication	I-710
CAV2-S	Cylinder with valve/cushioned short overall length	50 to 100	Double acting/double solenoid/lubrication	I-710
CKV2	Small cylinder with valve	20 to 40	Double acting	I-680
CKV2-M	Small cylinder with valve	20 to 40	Double acting/rotation-stop	I-692
COVN2	Cylinder with valve	50 to 100	Double acting/single solenoid/retracted in when energized/lubrication	I-710
COVN2-N	Cylinder with valve	50 to 100	Double acting/single solenoid/retracted in when energized/no lubrication	I-710
COVN2-NS	Cylinder with valve/cushioned short overall length	50 to 100	Double acting/single solenoid/retracted in when energized/no lubrication	I-710
COVN2-S	Cylinder with valve/cushioned short overall length	50 to 100	Double acting/single solenoid/retracted in when energized/lubrication	I-710
COVP2	Cylinder with valve	50 to 100	Double acting/single solenoid/push out when energized/lubrication	I-710
COVP2-N	Cylinder with valve	50 to 100	Double acting/single solenoid/push out when energized/no lubrication	I-710
COVP2-NS	Cylinder with valve/cushioned short overall length	50 to 100	Double acting/single solenoid/push out when energized/no lubrication	I-710
COVP2-S	Cylinder with valve/cushioned short overall length	50 to 100	Double acting/single solenoid/push out when energized/lubrication	I-710
JSC3-V	Brake cylinder	40 to 100	Double acting/with valve for brake	II-810
JSG-V	Tie rod cylinder with brake	40 to 100	Double acting/with valve for brake release	II-742
JSK2-V	Brake cylinder (small bore size/caulking)	20 to 40	Double acting	II-706
JSM2-V	Brake cylinder (small bore size/disassembling)	20 to 40	Double acting	II-720
SCA2-V	Medium bore size cylinder	40 to 100	Double acting	I-596
SCPD3-V	Pencil shaped cylinder	10/16	Double acting	I-70
SCPS3-V	Pencil shaped cylinder	10/16	Single acting	I-70
ST$^{S}_{L}$-$^{M}_{B}$V	Guided cylinder	20 to 80	Double acting	II-544
ULK-V	Brake cylinder	20 to 40	Double acting	II-680

Tandem

Two air cylinders connected in serial output double force.

Series/model series name		Bore size (ø)	Remarks	Page
SCM-W4	Round shaped cylinder	20 to 40		I-328

Metal bush bearing/ball bearing

Series/model series name		Bore size (ø)	Remarks	Page
STG-$^{M}_{B}$	Guided cylinder	12 to 80		II-336
STG-$^{M}_{B}$ -*C	Guided cylinder	32 to 63	With rubber-air cushion	II-350
STG-$^{M}_{B}$ C	Guided cylinder	16 to 63	With air cushion	II-358
STG-$^{M}_{B}$ Q	Guided cylinder	20 to 63	Position locking	II-368
STG-$^{M}_{B}$ G	Guided cylinder	20 to 63	Rubber scraper	II-376
STG-$^{M}_{B}$ G1	Guided cylinder	20 to 63	Coil scraper	II-376
STG-$^{MG2}_{MG3}$	Guided cylinder	20 to 63	Coolant proof	II-382
STG-$^{M}_{BG4}$	Guided cylinder	40 to 63	Anti-spatter adherence	II-388
STG-MG5	Guided cylinder	20 to 100	Metal bush bearing	II-394
STM-$^{M}_{B}$	Guided cylinder	6/10		II-314
ST$^{S}_{L}$-$^{M}_{B}$C	Guided cylinder	25 to 80	With air cushion	II-492
ST$^{S}_{L}$-$^{M}_{B}$ -*C	Guided cylinder	32 to 80	With rubber-air cushion	II-486
ST$^{S}_{L}$-$^{MG}_{BG1}$	Guided cylinder	20 to 80	Scraper	II-518
ST$^{S}_{L}$-$^{M}_{B}$P	Guided cylinder	8 to 80	Adjustable stroke type/push	II-470
ST$^{S}_{L}$-$^{M}_{B}$T2	Guided cylinder	12 to 80	Packing material fluoro rubber	II-480
ST$^{S}_{L}$-$^{M}_{B}$T	Guided cylinder	12 to 80	Heat resistance	II-476
ST$^{S}_{L}$-$^{M}_{B}$O	Guided cylinder	8 to 80	Low speed	II-514
ST$^{S}_{L}$-$^{M}_{B}$V	Guided cylinder	20 to 80	Valve equipped	II-544
ST$^{S}_{L}$-$^{M}_{B}$	Guided cylinder	8 to 80		II-448
ST$^{S}_{L}$-$^{M}_{B}$Q	Guided cylinder	20 to 80	Position locking	II-500
STR2-$^{M}_{B}$O	Twin rod cylinder	6 to 32	Low speed	II-602
STR2-$^{M}_{B}$	Twin rod cylinder	6 to 32		II-580
STR2-$^{M}_{B}$Q	Twin rod cylinder	16 to 32	Position locking	II-592
STR2-$^{M}_{B}$D	Twin rod cylinder	6 to 32	Double acting/double rod	II-612
UCA2	Unit cylinder	10 to 32	Metal bush bearing	II-640
UCA2-B	Unit cylinder	10 to 32	Ball bearing	II-650

High precision guide

Series/model series name		Bore size (ø)	Remarks	Page
LCR	Linear slide cylinder	6 to 25		II-58
MSDG-L	Small compact cylinder	6 to 16		I-1452
SRG3	Rodless cylinder	12 to 25		I-1650
SRM3	Rodless cylinder	25 to 63		I-1676

4 Search by specifications and variation

Specifications for rechargeable battery

Pneumatic components exclusively for materials which can be used in the rechargeable battery manufacturing process.

Series/model series name		Bore size (ø)	Remarks	Page
BHA -P4*	Compact cross roller parallel hand	12 to 25		CC-1226A Refer to "Components for rechargeable battery production P4* Series" catalog.
BHE -P4*	Centering hand	12 to 32		
BHG -P4*	Compact cross roller parallel hand (with rubber cover)	12 to 25		
CKG-G -P4*	3-way jaw bearing chuck (with rubber cover)	16 to 50		
CKL2 -P4*	Powerful chuck	20 to 100		
CKLB2 -P4*	2-way powerful chuck	20 to 100		
CMK2 -P4*	Medium bore size cylinder	20 to 40		
FC* -P4*	Flat cylinder	25 to 63		
FCK -P4	Shock absorber	-		
FJ -P4	Floating fitting	-		
FK -P40	Simplified floating fitting	-		
GRC -P4*	Table rotary actuator	-		
HAP -P4*	Parallel hand	15 to 40		
HCP -P4*	Lateral parallel hand	12 to 20		
HKP-G -P4*	Cross roller parallel hand (with rubber cover)	32 to 63		
HLBG -P4*	Bearing thin parallel hand (with rubber cover)	12 to 20		
HLC -P4*	Thin long stroke parallel hand	8 to 30		
HLD -P4*	Ultra thin parallel hand	12 to 20		
HMD -P4*	Thin wide angle hand	16, 25		
HMF -P4*	Compact wide parallel hand	12 to 40		
HRL-1 -P4	Guided cylinder (single axis unit)	20 to 63		
LCG -P4*	Linear slide cylinder	6 to 25		
LCR -P4*	Linear slide cylinder	6 to 25		
LCX -P4*	Linear slide cylinder	25, 32		
LHAG -P4*	Linear guide hand (with rubber cover)	12 to 32		
MDC2 -P4*	Small direct mounting cylinder	6 to 10		
MRG2 -P4	High precision guided magnet rodless cylinder	10 to 25		
MRL2 -P4*	Magnet rodless cylinder	6 to 32		
MSD -P4*	Small compact cylinder	6 to 16		
MSDG -P4*	Small guided compact cylinder	6 to 16		
MVC -P4*	Small cylinder with suction pad	6, 10		
NCK -P4*	Shock absorber	-		

Specifications for rechargeable battery

Pneumatic components exclusively for materials which can be used in the rechargeable battery manufacturing process.

Series/model series name		Bore size (ø)	Remarks	Page
SCG -P4*	Tie rod cylinder	32 to 100		CC-1226A Refer to "Components for rechargeable battery production P4* Series" catalog.
SCM -P4*	Round shaped cylinder	20 to 100		
SCPD3 -P4*	Pencil shaped cylinder	6 to 16		
SCS2-N -P4	Large bore size cylinder	125 to 250		
SFR/SFRT -P4	Fine speed fan rotary actuator	-		
SMG -P4*	Compact cylinder	6 to 32		
SMD2 -P4*	Compact cylinder	6 to 32		
SRL3 -P4*	Rodless cylinder	12 to 100		
SRM3 -P4*	Rodless cylinder with high precision guide	25 to 63		
SSD -P4*	Compact cylinder	12 to 160		
SSD2 -P4*	Compact cylinder	12 to 200		
SSG -P4*	Guided super compact cylinder	12 to 100		
STG-B/M -P4*	Guided cylinder	12 to 80		
STK -P4*	Stopper cylinder	25 to 50		
STR2 -P4*	Twin rod cylinder	6 to 32		
UCA2 -P4*	Unit cylinder	10 to 32		
USSD -P4*	Position locking compact cylinder	20 to 100		

4 Search by specifications and variation

Clean-room specifications

Anti-dust generation pneumatic components usable in clean rooms.

Series/model series name		Bore size (ø)	Remarks	Page
GRC -P72/P53	Table rotary actuator	Torque size 5 to 80		Refer to "Components for clean room specifications" in catalog No. CB-033SA.
LCR -P7*/P5*	Linear slide cylinder	6 to 25		
LCG -P7*	Linear slide cylinder	6 to 25		II-172
LCM -P73	Linear slide cylinder	4.5 to 8		II-40
LCX -P7*	Thin linear slide cylinder	25/32		II-270
MRL2 -P7*/P5*	Rodless cylinder (magnet)	6 to 32		Refer to "Components for clean room specifications" in catalog No. CB-033SA.
MDC2 - P7*/P5*	Small direct mounting cylinder	6 to 10		
SCM - P7*/P5*	Round shaped cylinder	20 to 100		
SCPD3 - P7*/P5*	Pencil shaped cylinder	6 to 16		
SMD2 - P7*/P5*	Compact cylinder	6 to 32		
SSD2 - P7*/P5*	Compact cylinder	12 to 160		I-1036
SSD - P7*/P5*	Compact cylinder	16 to 160		Refer to "Components for clean room specifications" in catalog No. CB-033SA.
STG - B - P72/P73	Guided cylinder	12 to 63		II-404
STM - B - P7*	Guided cylinder	6/10		II-320
ST$^{S}_{L}$-B-P7*/P5*	Guided cylinder	8 to 80		Refer to "Components for clean room specifications" in catalog No. CB-033SA.
STR2-$^{M}_{B}$-P7*/P5*	Twin rod cylinder	6 to 32		
SMG-P7*/P5*	Compact cylinder	6 to 25		

Copper and PTFE free

Pneumatic components for cathode ray tube manufacturing lines.

Series/model series name		Bore size (ø)	Remarks	Page
CKV2 -P6	Small cylinder	20 to 40		I-680
CMK2 -P6	Medium bore size cylinder	20 to 40		I-86
FC* -P6	Flat compact cylinder	25 to 63		I-1480
FJ	Floating joint	-	Copper and PTFE free as standard	II-1948
HRL-1*	Hybrid robot	20 to 63	Copper and PTFE free as standard	II-1452
MRL2	Rodless cylinder (magnet)	6 to 32	Copper and PTFE free as standard	I-1740
RRC -P6	Rotary actuator (rack and pinion mechanism)	-	Effective torque 0.7, 3, 1, 5.6 N•m	II-1286
SCA2 -P6	Medium bore size cylinder	40 to 100		I-450
SCG-P6	Tie rod cylinder	32 to 100		I-358
SCM -P6	Round shaped cylinder	20 to 100		I-232
SCP*3	Pencil shaped cylinder	6 to 16	Copper and PTFE free as standard	I-8
SCS2 -P6	Large bore size cylinder	125 to 250		I-626
SRL3 -P6	Rodless cylinder	12 to 100		I-1574
SSD2-P6	Compact cylinder	12 to 100	ø12 to ø50 Copper and PTFE free as standard	I-752
SSD -P6	Compact cylinder	12 to 100	ø12 to ø50 Copper and PTFE free as standard	I-1094
STG-$^{M}_{B}$-P6	Guided cylinder	12 to 80		II-336
ST$^{S}_{L}$-$^{M}_{B}$-P6	Guided cylinder	8 to 80		II-448
STR2-$^{M}_{B}$-P6	Twin rod cylinder	6 to 32		II-580

Coolant proof product

Pneumatic components with a special structure with outstanding oil and water resistance.

Series/model series name		Bore size (ø)	Remarks	Page
CMK2-G$^{2}_{3}$	Medium bore size cylinder	20 to 40		I-182
CMK2-JG$^{2}_{3}$	Small bore size cylinder/stainless steel	20 to 40		I-188
SCA2-G$^{2}_{3}$	Medium bore size cylinder	40 to 100		I-584
SCG-G$^{2}_{3}$	Tie rod cylinder	40 to 100		I-424
SSD2-G$^{2}_{3}$	Compact cylinder	16 to 100		I-946
SSD2-KG$^{2}_{3}$	Compact cylinder high load	16 to 100		I-956
SSD-G$^{2}_{3}$	Compact cylinder	16 to 100		I-1230
SSD-KG$^{2}_{3}$	Compact cylinder high load	16 to 100		I-1238
STG-$^{MG2}_{MG3}$	Guided cylinder	20 to 63		II-382
ST$^{S}_{L}$-$^{M}_{B}$G$^{2}_{3}$	Guided cylinder	20 to 80		II-526

Anti-spatter adherence

Pneumatic cylinder with a structure preventing spatter adherence from welding.

Series/model series name		Bore size (ø)	Remarks	Page
CAC4-G4	Clamp cylinder	40 to 80		II-1020
RCS2-G4	Rotary clamp cylinder	32 to 63		II-1084
RCC2-G4	Rotary clamp cylinder	20 to 63		II-1108
SCA2-$^{G1}_{G4}$	Medium bore size cylinder	40 to 100		I-590
SCG-G4	Tie rod cylinder	32 to 100		I-430
SSD2-$^{G1}_{G4}$	Compact cylinder	25 to 100		I-966
SSD2-K$^{G1}_{G4}$	Compact cylinder high load	25 to 100		I-974
SSD2-D$^{G1}_{G4}$	Compact cylinder double rod	25 to 100		I-984
SSD-$^{G1}_{G4}$	Compact cylinder	32 to 100		I-1246
SSD-K$^{G1}_{G4}$	Compact cylinder high load	32 to 100		I-1254
SSD-D$^{G1}_{G4}$	Compact cylinder double rod	32 to 80		I-1264
STG-$^{M}_{B}$G4	Guided cylinder	40 to 63		II-388
ST$^{S}_{L}$-$^{MG1}_{BG4}$	Guided cylinder	40 to 80		II-536

Environment-resistant scraper NEW

Pneumatic cylinder suitable for use in an environment containing ceramic fine powder and metal fine powder.

Series/model series name		Bore size (ø)	Remarks	Page
SSD2-G5	Compact cylinder	20 to 100		I-992
SSD2-KG5	Compact cylinder high load	20 to 100		I-1002
STG-MG5	Guided cylinder	20 to 100		II-394

System selection

Even beginners can easily make a model selection.

How to make a system selection

An overview of the selection is available
with the following two conditions.

1 When selecting peripheral pneumatic components, having determined cylinder bore size and operation speed

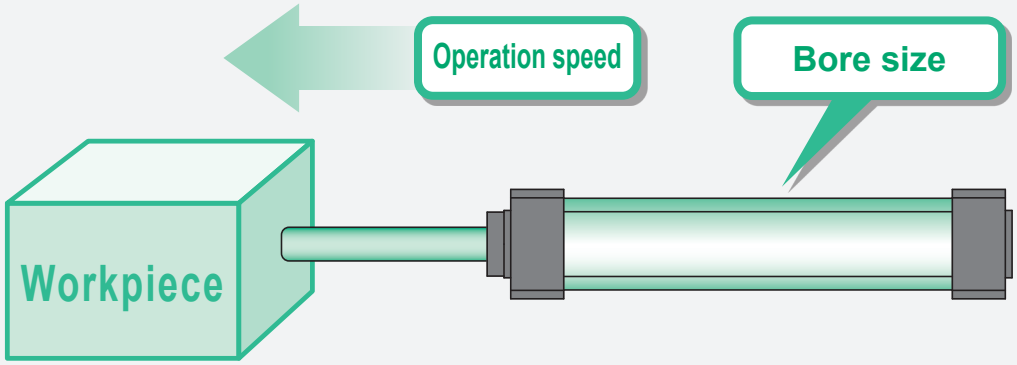

To Intro Page 50

2 When selecting peripheral pneumatic components, having determined bore size from cylinder load and operating time

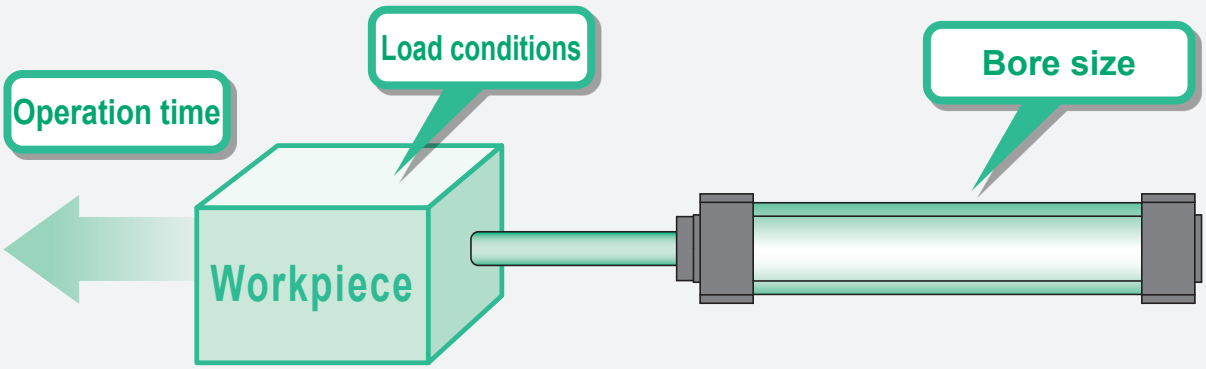

To Intro Page 61

1 Selecting from cylinder bore size and operation speed

STEP 1

[Confirming conditions]
Check cylinder tube bore size and cylinder operation speed

Select the theoretical reference speed

From Table 1

Whether the cylinder bore size and cylinder being used are driven with relative high or low speed is determined as a condition.

Using Table 1 as a reference, select the theoretical reference speed of the cylinder.

(1) Bore size ø▭
(2) Operation speed Low speed/medium speed/ high speed/ultra-high speed

STEP 2

Select appropriate fluid control components from bore size and theoretical reference speed, and select [required flow rate]

From to Table 2

Refer to Table 2 and select appropriate fluid control components (valve, speed controller, silencer, piping) and [required flow rate] for corresponding cylinder bore size and theoretical reference speed.

STEP 3

Select the clean air system components

From to Table 3

Refer to Table 3, and select a component with a [max. flow rate] higher than the [Required flow rate] value.
When controlling multiple cylinders with a set of clean air system components, select the clean air system component having a [max. flow rate] higher than the [total of required flow rates].

* The relationship of the cylinder bore size and speed for the valve (4G Series/4K Series) is shown in a graph.
"A combination of the valve and the cylinder's standard system" (Example) Intro Pages 59 to 60

(1) The cylinder average speed is obtained from the combination of the valve and piping system. It is expressed as the cylinder's piston speed calculated by dividing the stroke length by the time that the piston rod takes from start to end of movement with the cylinder rod installed facing upward. When the load factor is 50%, the average speed should be approximately the cylinder's piston speed multiplied by 0.5. (Refer to Intro Page 63 for the relation of load factor and theoretical reference speed.)
(2) The cylinder theoretical reference speed is the value of when one cylinder moves independently.
(3) The valve's effective cross-sectional area used in the calculation for Table 2 is the 2-position value.
(4) This selection guide is for reference. With the CKD sizing program, confirm conditions to be actually used.

System selection

STEP1 Conditions confirmation/theoretical reference speed selection

As a condition, it is predetermined whether bore size and cylinder are to be operated at a relatively high speed or at a relatively low speed.

Table 1

Degree of cylinder speed	Low speed	Medium speed	High speed	Ultra high speed
Theoretical reference speed (mm/s)	250	500	750	1,000

STEP2 Fluid control components selection

Select appropriate fluid control components (valve, speed controller, silencer, piping) and [required flow rate] for bore size and theoretical reference speed selected from Table 1.

Table 2

Bore size (mm)	Theoretical reference speed (mm/s) Note)	Required flow rate (ℓ/min) (ANR)	Required composite effective cross-sectional area (mm^2)	Valve Single solenoid
ø6	500	5	0.1	MN4E010 4SA010/4SB010
ø10	500	14	0.2	MN4E010 4SA010/4SB010
ø16	500	36	0.5	MN4E010 4SA010/4SB010
ø20	250	29	0.5	4KA110/4KB110 4GA110R/4GB110R
	500	56	0.9	4KA110/4KB110
	750	84	1.4	4GA110R/4GB110R
	1,000	112	1.8	
ø25	250	44	0.8	4KA110/4KB110
	500	88	1.4	4GA110R/4GB110R
	750	132	2.1	4KB110/4GB110R
	1,000	175	2.8	4KB210/4GB210R
ø32	250	73	1.3	4KA110/4KB110 4GA110R/4GB110R
	500	143	2.9	4KA210/4KB210
	750	215	3.5	4GA210R/4GB210R
	1,000	286	4.6	

Note) The above table indicates theoretical reference speed at cylinder bore size.
Refer to the individual specifications of each model for the working piston speed range.

*1: Refer to Intro Page 67 for piping specifications.

Suitable control components				
		Pneumatic auxiliary components		Piping *1
	Double solenoid	Speed controller	Silencer	Piping (between valve and cylinder)
	MN4E020 4SA020/4SB020	SC3W-M5-4 DSC-C-M5-4	SLM-M5,SLM-M3	ø4 x ø2.5 nylon tube
	MN4E020 4SA020/4SB020	SC3W-M5-4 DSC-C-M5-4	SLM-M5,SLM-M3	ø4 x ø2.5 nylon tube
	MN4E020 4SA020/4SB020	SC3W-M5-4 DSC-C-M5-4	SLM-M5,SLM-M3	ø4 x ø2.5 nylon tube
	4KA120/4KB120 4GA120R/4GB120R	SC3W-6-6/SCL2-06-H66 DSC-(C)-6-6/DSC-S1-06-H66	SLM-M5,SLW-6A	ø6 x ø4 nylon tube
	4KA120/4KB120 4GA120R/4GB120R	SC3W-6-6 DSC-(C)-6-6 SCL2-06-H66 DSC-S1-06-H66	SLM-M5,SLW-6A	ø6 x ø4 nylon tube
	4KA120/4KB120 4GA120R/4GB120R	SC3W-6-6 DSC-(C)-6-6 SCL2-06-H66 DSC-S1-06-H66	SLM-M5,SLW-6A	ø6 x ø4 nylon tube
	4KB120/4GB120R	SC1-6	SLW-6A,SL-M5	ø8 x ø5.7 nylon tube
	4KB220/4GB220R	DSC-S1-08-H88	SLW-6S,SLW-6A	ø8 x ø5.7 nylon tube
	4KA120/4KB120 4GA120R/4GB120R	SC3W-6-6/SCL2-06-H66 DSC-(C)-6-6/DSC-S1-06-H66	SLM-M5,SLW-6A	ø6 x ø4 nylon tube
	4KA220/4KB220 4GA220R/4GB220R	SC1-6 SCL2-08-H88 DSC-S1-08-H88	SLW-6S,SLW-6A	ø8 x ø5.7 nylon tube

System selection

Bore size (mm)	Theoretical reference speed (mm/s) Note)	Required flow rate (ℓ/min) (ANR)	Required composite effective cross-sectional area (mm^2)	Valve Single solenoid
ø40	250	110	1.7	
	500	230	3.3	4KA210/4KB210 4GA210R/4GB210R
	750	340	5.0	
	1,000	450	6.6	
ø50	250	180	2.6	4KA210/4KB210 4GA210R/4GB210R
	500	350	5.2	
	750	530	7.7	4GA310R/4GB310R
	1,000	710	10.4	4GA310R/4GB310R 4F310/4F410
ø63	250	280	4.1	4KA210/4KB210 4GA310R/4GB310R
	500	560	8.2	4GA310R/4GB310R
	750	840	12.3	4KA310/4KB310 4F310/4F410
	1,000	1,100	16.4	4F510
ø80	250	450	6.6	4KB210/4F210-08
	500	910	13.2	4F410-10/4F310-10 4KB310-10
	750	1,400	19.8	4KB410-15 4F510-15
	1,000	1,800	26.4	
ø100	250	710	10.3	4GA410-10/4GB410-10 4F410-10/4F310-10 4KB310-10
	500	1,400	20.6	4GB410-15 4KB410-15/4F510-15
	750	2,100	30.9	
	1,000	2,800	41.2	4F610-20

Note) The above table indicates theoretical reference speed at cylinder bore size.
Refer to the individual specifications of each model for the working piston speed range.

*1: Refer to Intro Page 67 for piping specifications.

Suitable control components				
		Pneumatic auxiliary components		Piping *1
	Double solenoid	Speed controller	Silencer	Piping (between valve and cylinder)
		SC3W-6-6 SCL2-06-H66 DSC-(C)-6-6 DSC-S1-06-H66	SLM-M5,SLW-6A	ø6 x ø4 nylon tube
	4KA220/4KB220 4GA220R/4GB220R	SC1-6 SCL2-08-H88 DSC-8-8 DSC-S1-08-H88	SLW-6S,SLW-6A	ø8 x ø5.7 nylon tube
		SC1-8	SLW-8A,SLW-6A	ø10 x ø7.2 nylon tube
		SC1-8	SLW-8A,SLW-8S	ø10 x ø7.2 nylon tube
	4KA220/4KB220 4GA220R/4GB220R	SC1-6 SCL2-08-H88 DSC-S1-08-H88	SLW-6A,SLW-6S	ø8 x ø5.7 nylon tube
		SC1-8 SCL2-10-H1010 DSC-S1-10-H1010	SLW-8A,SLW-6A	ø10 x ø7.2 nylon tube
	4GA320R/4GB320R		SLW-8A,SLW-8S	ø10 x ø7.2 nylon tube
	4GA320R/4GB320R 4F320/4F420	SC1-10	SLW-10A	ø15 x ø11.5 nylon tube or Rc3/8 steel pipe
	4KA220/4KB220 4GA320R/4GB320R	SC1-6 SCL2-08-H88 DSC-S1-08-H88	SLW-6S,SLW-6A	ø8 x ø5.7 nylon tube
	4GA320R/4GB320R	SC1-8 SCL2-10-H1010 DSC-S1-10-H1010	SLW-8A,SLW-8S	ø10 x ø7.2 nylon tube
	4KA320/4KB320 4F320/4F420	SC1-10	SLW-10A	ø15 x ø11.5 nylon tube or Rc3/8 steel pipe
	4F520	SC1-15	SLW-15A	Rc1/2 steel pipe
	4KB220/4F220-08	SC1-8 SCL2-10-H1010 DSC-S1-10-H1010	SLW-8A,SLW-8S	ø10 x ø7.2 nylon tube
	4F420-10/4F320-10 4KB320-10	SC1-10	SLW-10A	ø15 x ø11.5 nylon tube or Rc3/8 steel pipe
	4KB420-15 4F520-15	SC1-15	SLW-15A	Rc1/2 steel pipe
		SC-20A	SLW-15A	Rc1/2 steel pipe
	4GA420-10/4GB420-10 4F420-10/4F320-10 4KB320-10	SC1-10	SLW-10A	ø15 x ø11.5 nylon tube or Rc3/8 steel pipe
	4GB420-15 4KB420-15/4F520-15	SC1-15	SLW-15A	Rc1/2 steel pipe
		SC-20A	SLW-15A	Rc1/2 steel pipe
	4F620-20	SC-20A	SL-20A,SLW-20S	Rc3/4 steel pipe

System selection

Bore size (mm)	Theoretical reference speed (mm/s) Note)	Required flow rate (ℓ/min) (ANR)	Required composite effective cross-sectional area (mm^2)	Valve Single solenoid	
ø125	250	1,100	16.1	4GB410-15 4KB410-15/4F510-15	
	500	2,200	32.2		
	750	3,300	48.2	4F610-20	
	1,000	4,400	64.4		
ø140	250	1,400	20.2	4GB410-15 4KB410-15/4F510-15	
	500	2,800	40.4	4F610-20	
	750	4,200	60.5		
	1,000	5,500	80.8	4F710-25	
ø160	250	1,800	26.3	4GB410-15 4KB410-15/4F510-15	
	500	3,600	52.6	4F610-20	
	750	5,400	79.0	4F710-20	
	1,000	7,200	104.7	-	
ø180	250	2,300	33.3	4KB410-15 4F510-15	
	500	4,600	66.6	4F710-20	
	750	6,900	100.0	4F710-25	
	1,000	9,200	132.5	-	
ø200	250	2,800	41.2	4F610-20	
	500	5,600	82.4	4F710-25	
	750	8,400	122.7	-	
	1,000	11,200	163.6	-	
ø250	250	4,400	64.3	4F710-20	
	400	7,000	103.0	4F710-25	
	750	13,200	191.7	-	
	1,000	17,600	255.6	-	

*1: Refer to Intro Page 67 for piping specifications.

Suitable control components			
	Pneumatic auxiliary components		Piping *1
Double solenoid	Speed controller	Silencer	Piping (between valve and cylinder)
4GB420-15 4KB420-15/4F520-15	SC1-15	SLW-15A	Rc1/2 steel pipe
	SC-20A	SLW-15A	Rc1/2 steel pipe
4F620-20	SC-20A	SL-20A,SLW-20S	Rc3/4 steel pipe
	SC-20A	SL-20A	Rc3/4 steel pipe
4GB420-15 4KB420-15/4F520-15	SC1-15	SLW-15A	Rc1/2 steel pipe
4F620-20	SC-20A	SL-20A,SLW-20S	Rc3/4 steel pipe
		SL-20A	Rc3/4 steel pipe
4F720-25	SC-20A	SL-25A	Rc1 steel pipe
4GB420-15 4KB420-15/4F520-15	SC-20A	SLW-15A	Rc1/2 steel pipe
4F620-20	SC-20A	SL-20A	Rc3/4 steel pipe
4F720-20	SC-20A	SL-20A	Rc3/4 steel pipe
-	-	-	-
4KB420-15 4F520-15	SC-20A	SLW-15A	Rc1/2 steel pipe
4F720-20	SC-20A	SL-20A	Rc3/4 steel pipe
4F720-25	SC-25A	SL-25A	Rc1 steel pipe
-	-	-	-
4F620-20	SC-20A	SL-20A,SLW-20S	Rc3/4 steel pipe
4F720-25	SC-25A	SL-25A	Rc1 steel pipe
-	-	-	-
-	-	-	-
4F720-20	SC-20A	SL-20A	Rc3/4 steel pipe
4F720-25	SC-25A	SL-25A	Rc1 steel pipe
-	-	-	-
-	-	-	-

System selection

STEP 3 Clean air system components selection

Select a component with a max. flow rate equal to or higher than the [required flow rate] value in Table 2.
When controlling multiple cylinders with a single set of clean air system components, select the clean air system component with [max. flow rate] higher than [total required flow rates].

Table 3

F.R.L kit			F.R. unit		
Model No.	Port size	Max flow ℓ/min (Atm press conv value)	Model No.	Port size	Max flow ℓ/min (Atm press conv value)
C1000-6-W	Rc1/8	450	W1000-6-W	Rc1/8	800
C1000-8-W	Rc1/4	630	W1000-8-W	Rc1/4	1,150
C2000-8-W	Rc1/4	1,200	W2000-8-W	Rc1/4	1,500
C2000-10-W	Rc3/8	1,700	W2000-10-W	Rc3/8	2,000
C2500-8-W	Rc1/4	1,200	W3000-8-W	Rc1/4	2,150
C2500-10-W	Rc3/8	1,700	W3000-10-W	Rc3/8	2,430
C3000-8-W	Rc1/4	1,280	W4000-8-W	Rc1/4	2,500
C3000-10-W	Rc3/8	1,750	W4000-10-W	Rc3/8	4,350
C4000-8-W	Rc1/4	1,430	W4000-15-W	Rc1/2	4,750
C4000-10-W	Rc3/8	2,400	W8000-20-W	Rc3/4	10,000
C4000-15-W	Rc1/2	3,000	W8000-25-W	Rc1	10,000
C6500-20-W	Rc3/4	4,500	B7019-1C	Rc1/8	500
C6500-25-W	Rc1	5,000	B7019-2C	Rc1/4	900
C8000-20-W	Rc3/4	7,000			
C8000-25-W	Rc1	7,500			
K60570-1C-GB	Rc1/8	200			
K60570-2C-GB	Rc1/4	300			

Explanation of technical terms

[Theoretical reference speed]: indicates degree of cylinder speed, expressed as the following formula.
(This value coincides with speed at no load. When load is applied, speed drops considerably.)

$$VO = 1920 \times \frac{S}{A} = 2445 \times \frac{S}{D^2} \quad \cancel{(1)}$$

VO: Theoretical reference speed (mm/s)
A: Cylinder sectional area (cm^2)
S: Composite effective cross-sectional area of circuit (exhaust air side) (mm^2)
D: Cylinder bore size (cm)

When expressed as a graph, the theoretical reference speed is the speed within the range where the cylinder moves at a uniform speed

$$VO = \frac{\ell}{t3} \text{ (mm/s)}$$

t1: Time until movement starts
t2: Time of primary delay
t3: Operating time with constant velocity
ℓ: Stroke length

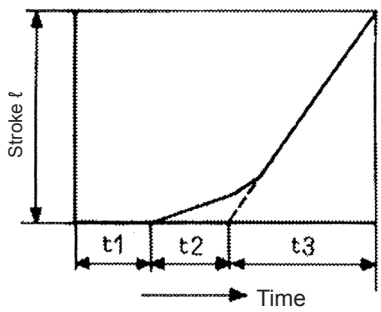

* Note/t1 and t2 differ depending on load. At no load, this can be ignored to no ill effect.

■ F.R.L. kit, unit, regulator
Primary pressure 0.7 MPa, set pressure 0.5 MPa, pressure drop 0.1 MPa

■ Air filter
Primary pressure 0.7 MPa, pressure drop 0.02 MPa

■ Lubricator
Primary pressure 0.5 MPa, pressure drop 0.03 MPa

Air filter (F)			Regulator (R)			Lubricator (L)		
Model No.	Port size	Max flow ℓ/min (Atm press conv)	Model No.	Port size	Max flow ℓ/min (Atm press conv)	Model No.	Port size	Max flow ℓ/min (Atm press conv)
F1000-6-W	Rc1/8	460	R1000-6-W	Rc1/8	770	L1000-6-W	Rc1/8	550
F1000-8-W	Rc1/4	610	R1000-8-W	Rc1/4	1,350	L1000-8-W	Rc1/4	700
F2000-8-W	Rc1/4	1,300	R2000-8-W	Rc1/4	1,750	L3000-8-W	Rc1/4	1,100
F2000-10-W	Rc3/8	1,700	R2000-10-W	Rc3/8	2,500	L3000-10-W	Rc3/8	2,250
F3000-8-W	Rc1/4	1,230	R3000-8-W	Rc1/4	2,000	L4000-8-W	Rc1/4	1,000
F3000-10-W	Rc3/8	1,500	R3000-10-W	Rc3/8	2,600	L4000-10-W	Rc3/8	1,700
F4000-8-W	Rc1/4	1,320	R4000-8-W	Rc1/4	2,500	L4000-15-W	Rc1/2	2,700
F4000-10-W	Rc3/8	2,140	R4000-10-W	Rc3/8	4,400	L8000-20-W	Rc3/4	6,300
F4000-15-W	Rc1/2	3,000	R4000-15-W	Rc1/2	5,000	L8000-25-W	Rc1	10,000
F6000-20-W	Rc3/4	5,600	R6000-20-W	Rc3/4	7,000	A3019-1C	Rc1/8	100
F6000-25-W	Rc1	6,200	R6000-25-W	Rc1	7,700	A3019-2C	Rc1/4	400
F8000-20-W	Rc3/4	6,400	R8000-20-W	Rc3/4	14,000	3003E-6C	Rc3/4	3,500
F8000-25-W	Rc1	6,800	R8000-25-W	Rc1	11,000	3003E-8C	Rc1	4,000
A1019-1C	Rc1/8	550	B2019-1C	Rc1/8	500			
A1019-2C	Rc1/4	700	B2019-2C	Rc1/4	500			
1138-6C-E	Rc3/8	5,500	2215-6C	Rc3/4	14,000			
1138-8C-E	Rc1	7,000	2215-8C	Rc1	14,000			
			2215-10C	Rc1 1/4	14,000			

[Required flow rate]: indicates instantaneous flow rate for operating a cylinder with velocity v_O, expressed with the following formula. Values in the table are when P = 0.5 MPa. The required flow rate is a value necessary to select clean air system components.

$$Q \approx \frac{Av_O(P+0.101)\times 60}{0.101\times 10^4} \quad \text{—(2)}$$

Q: Required flow rate (ℓ/min) (ANR)
P: Supply pressure (MPa)

[Required effective sectional area]: indicates composite effective cross-sectional area for the exhaust circuit required for moving the cylinder at speed v_O.
(Composite effective cross-sectional area of valve, speed controller, silencer or piping)

[Proper standard system]: indicates the most appropriate combination of valve, speed controller, silencer and bore size for operating a cylinder with velocity v_O. The combination in the table is for a pipe length of 1 m.

System selection

A combination of the valve and the cylinder's standard system (example)

(1) The cylinder average speed is obtained from the combination of the valve and piping system. It is expressed as the cylinder's piston speed calculated by dividing the stroke by the time that the piston rod takes from start to end of movement with the cylinder rod installed facing upward. When the load factor is 50%, the average speed should be approximately the cylinder's piston speed multiplied by 0.5. (Refer to Intro Page 61 for the relation of load factor and theoretical reference speed.)

(2) The cylinder's average speed is that when one cylinder is operated independently.

(3) The effective cross-sectional area of the solenoid valve used for the calculation below is the 2-position value.

(4) This selection guide is for reference. Check the selection with actual conditions using a sizing program.

(5) Graph for the 4G and 4K Series valve (2-position single, base piping) is shown as an example.

4G Series

(With internal exhaust check valve)

(Example) The connection component system No. is ❷ for the 4G1 with a C6 port size.

Series	Base piping						System No.
	Model No.	Solenoid valve port size	Speed controller	Silencer	Piping (1 m)	Composite effective cross-sectional area (mm^2) Pipe length (1 m)	
4G1	M4GB110R	C4	SC3W-6-4	SLW-6S	ø4 x ø2.5	1.4	❶
	M4GB110R	C6	SC1-6	SLW-6S	ø6 x ø4	2.8	❷
4G2	M4GB210R	C6	SC1-8	SLW-8S	ø6 x ø4	4.5	❸
	M4GB210R	C8	SC1-10	SLW-8S	ø8 x ø5.7	6.7	❹
4G3	M4GB310R	C10	SC1-10	SLW-10L	ø10 x ø7.2	10.1	❺
	M4GB310R	C10	SC1-15	SLW-10L	ø12 x ø8.9	11.5	❻

* The system No. is indicated in the following graph.

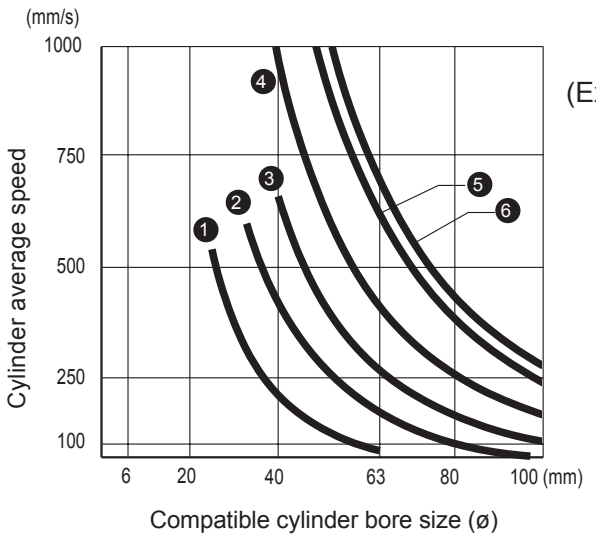

(Example) When using system ❷ with ø40 cylinder diameter, the cylinder's average speed is about 450 mm/s. (Note that this differs with working conditions.)

MN4G Series

(With internal exhaust check valve)

Series	Solenoid valve port size	Speed controller	Piping (1 m)	Common exhaust piping	Composite effective X-sectional area (mm²)	System No.
MN4G1	C4	SC3W-M5-4	ø4×ø2.5	ø6×ø4×3 m	0.9	❶
	C4	SC3W-6-4	ø4×ø2.5	ø6×ø4×3 m	1.4	❷
	C6	SC1-6	ø6×ø4	ø8×ø5.7×3 m	2.8	❸
MN4G2	C6	SC1-6	ø6×ø4	ø8×ø5.7×3 m	3.8	❹
	C8	SC1-8	ø8×ø5.7	ø10×ø7.2×3 m	6.0	❺

* The system No. is indicated in the following graph.
* This graph applies to common exhaust.

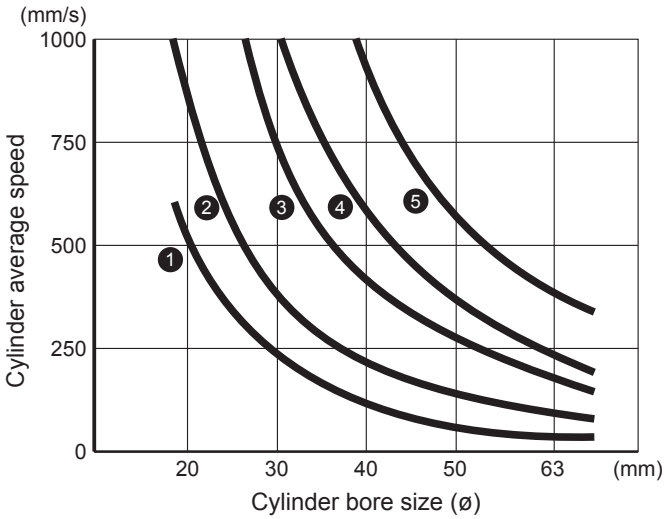

4K Series

Series	Solenoid valve port size	Speed controller	Silencer	Piping (1 m)	Composite effective X-sectional area (mm²)	System No.
4KB110	C6	SC1-6	SLW-6S	ø6×ø4	3.2	❶
4KB210	C8	SC1-8	SLW-8S	ø8×ø5.7	7.7	❷
4KB310	C10	SC1-10	SLW-10L	ø10×ø7.2	14.1	❸
4KB410	C15	SC1-15	SLW-15A	ø12×ø8.9	23.6	❹

* The system No. is indicated in the following graph.

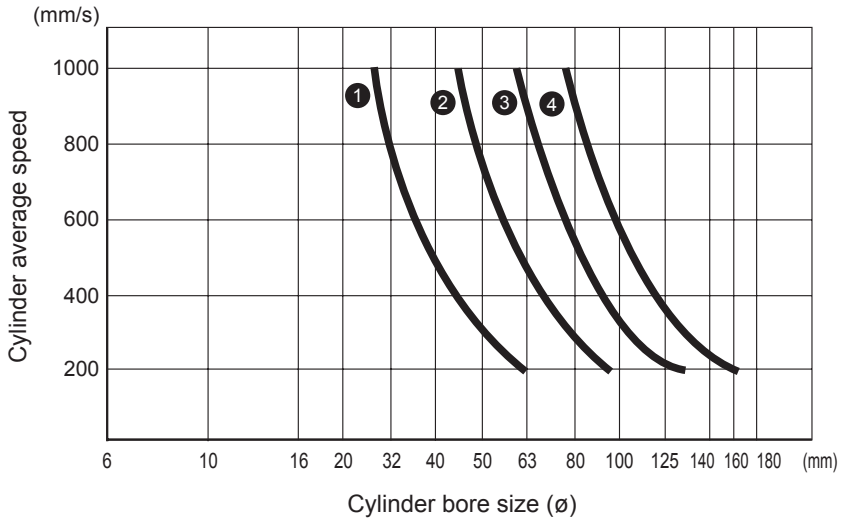

System selection

2 Selecting from the load value and operation time

■ How to select

When load (N) and cylinder required operation time (S) are already decided, use [System selection 2] to select an appropriate model. Follow the following procedures.

STEP 1

[Confirming conditions]
Load value (N),
Required operation time (S)

↓

STEP 2

Selecting cylinder bore size

From Graph 1

↓

STEP 3

Selecting theoretical reference speed

From Graph 2

↓

STEP 4

Selecting a suitable system

From Graph 3

↓

STEP 5

Selecting suitable components

From Table 1

STEP 1 Confirming conditions

(1) Load	F= ☐ (N)
(2) Required operation time	t = ☐ (s)
(3) Stroke	L= ☐ (mm)
(4) Pressure	P= ☐ (MPa)

M: Weight of body (kg)
μ : Friction coefficient (normally μ≈ 0.3)
F : Load (N)
g : 9.8 m/s²

● Vertical

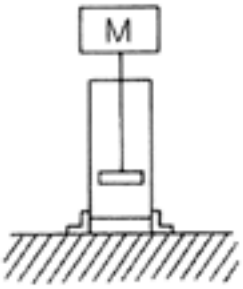

F=Mg

● Horizontal

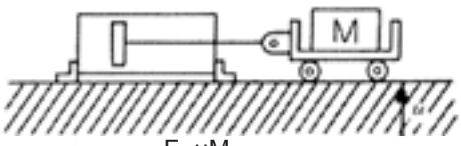

F=μMg

STEP 2 Selecting cylinder bore size

According to the nomogram for cylinder bore size, select the cylinder bore size and read the load factor at the same time. (Normally, for value F of “Step 1 Confirming conditions”, read the cylinder bore size whose load factor is close to 50%)

Cylinder bore size D = ø□

(Example) When F = 800N , P = 0.5 MPa , cylinder bore size is ø63 at Load factor 50% .

Graph 1 Nomogram to find cylinder bore size

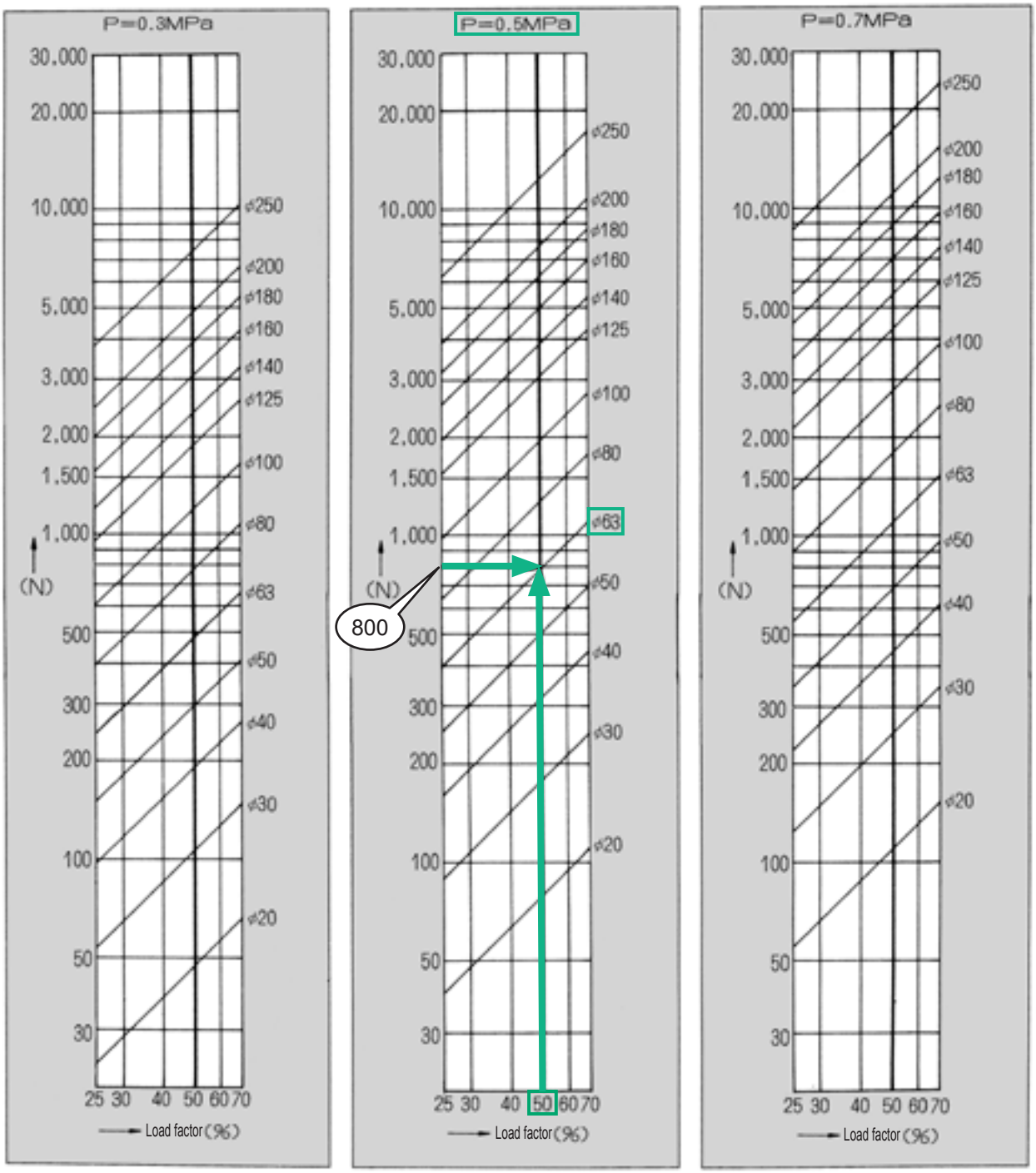

System selection

STEP 3 Selecting theoretical reference speed

According to t-*vo* graph, read *vo* value to obtain the required operation time t (sec).

vo=☐

(Example) When Load factor 50% and Stroke of 200mm cylinder operate with 1.0sec ,
theoretical reference speed is 450 mm/s .

Graph 2 t-*vo* graph

Load factor 0%

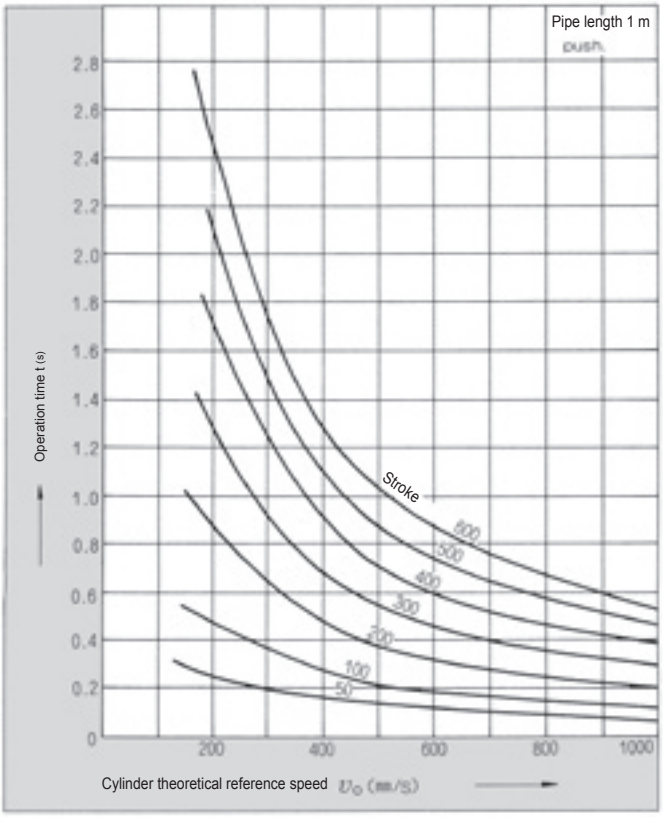

Load factor 25%

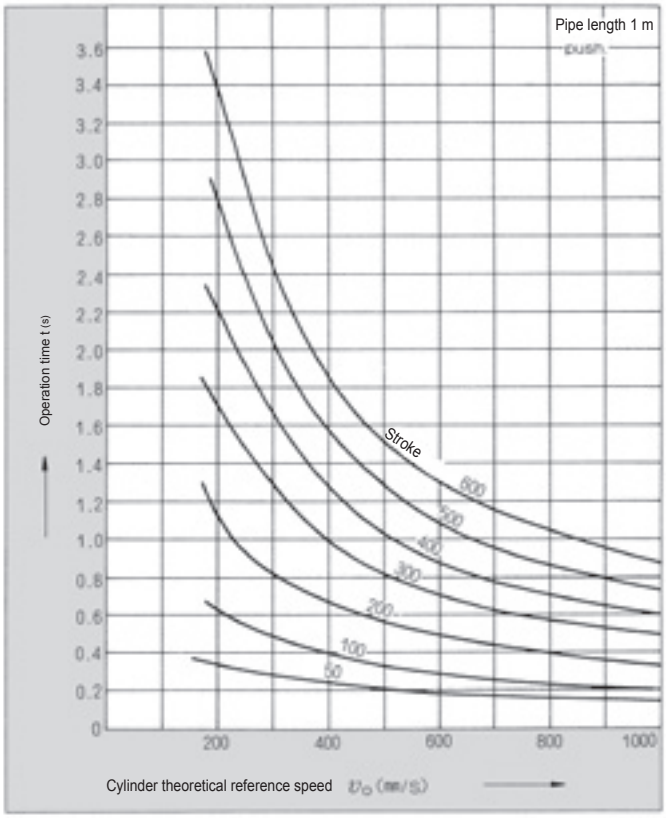

Load factor 50%

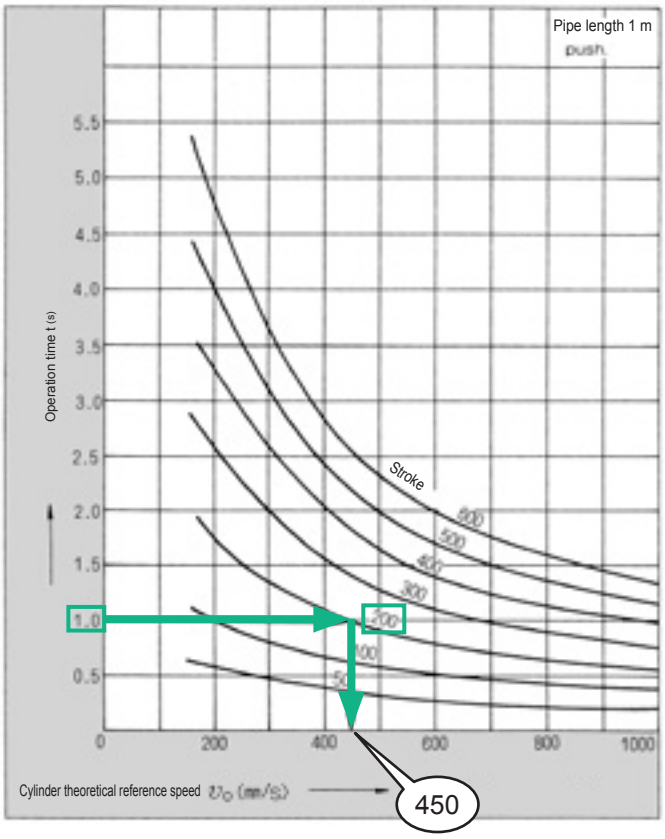

Load factor 70%

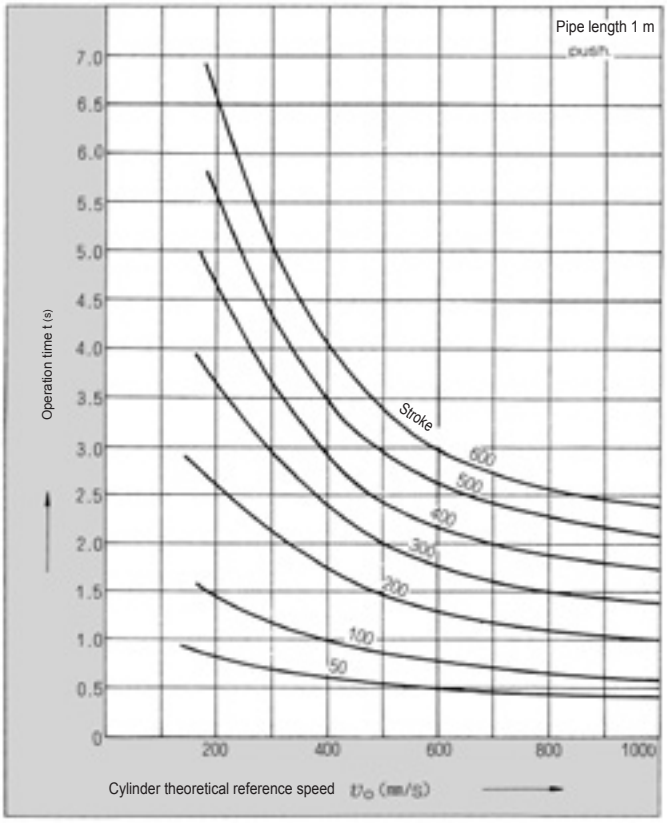

System selection

STEP 4 Selecting a suitable system

In the system selection table, find the cross point of *VO* obtained in [STEP 3 Selecting theoretical reference speed] and øD obtained in [STEP 2 Selecting cylinder bore size], and from the cross point, trace a line extended straight up to read the system code.

System code ☐

(Example) In order to operate ø63 cylinder at theoretical reference speed 450 mm/s, C1 system is ideal.

Graph 3 System selection table

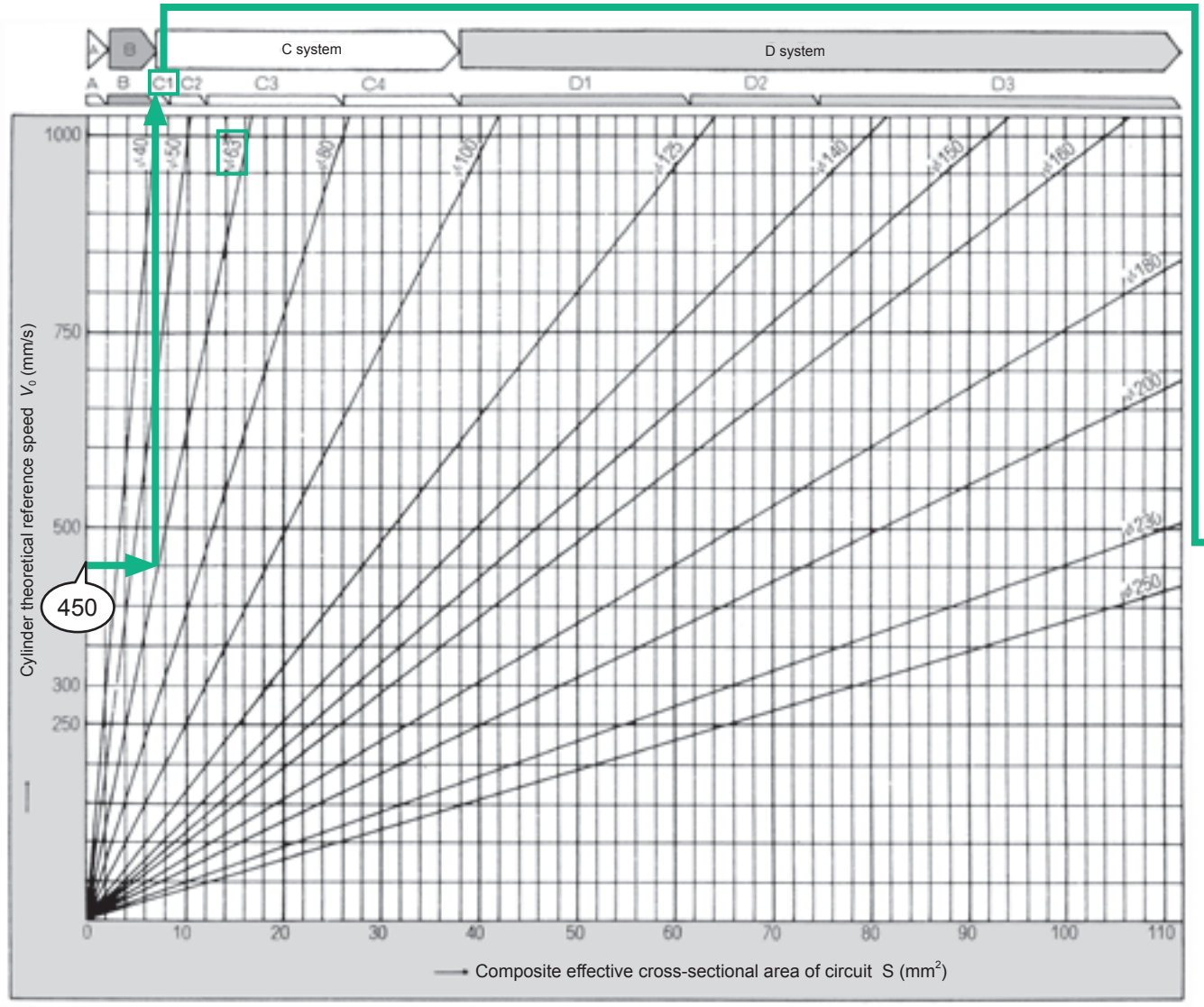

STEP 5 Selecting suitable components

According to the standard system table, confirm the model No. of proper system components with the code found in [STEP 4 Selecting a suitable system].

	(Example) CI system
Valve ☐	Valve: Single 4KB210-08 or 4GB310R-08 Double 4KB220-08 or 4GB320R-08
Speed controller ☐	Speed controller: SCI-8
Silencer ☐	Silencer: SLW-8A
Piping ☐	Piping: ø10 x ø7.2 nylon tube 1 m

Table 1 Standard system table

Standard system No.	Valve		Speed controller	Silencer	Piping	Composite eff X-sect area (mm^2) pipe 1 m
	Single solenoid	Double solenoid				
A	4SB010-M5 4KA110-GS4	4SB020-M5 4KA120-GS4	SC3W-M5-4 (SC-M5)	SLM-M5	ø4×ø2.5 Nylon tube	0.9
B1	4KA110-GS6 4KB110-06	4KA120-GS6 4KB120-06	SC3W-6-6 SCL2-06-H66	SLM-M5 SLW-6A	ø6×ø4 Nylon tube	2.0
B2	4KB110-06 4GB110R-06	4KB120-06	SC1-6 SCL2-08-H88	SL-M5 SLW-6A	ø8×ø5.7 Nylon tube	3.0
B3	4GB210R-06 4KB210-06	4KB220-06	SC1-6 SCL2-08-H88	SLW-6A SLW-6S	ø8×ø5.7 Nylon tube	5.2
B4	4GB210R-08 4KB210-08	4GB220R-08 4KB220-08	SC1-8 SCL2-10-H1010	SLW-6A SLW-8A	ø10×ø7.2 Nylon tube	6.4
C1	4GB210R-08 4KB210-08 4F210-08	4GB220R-08 4KB220-08 4F220-08	SC1-8 SCL2-10-H1010	SLW-8A SLW-8S	ø10×ø7.2 Nylon tube	7.8
C2	4GB310R-10 4F310-10 4KB310-10	4GB320R-10 4F320-10 4KB320-10	SC1-10	SLW-10A	ø10×ø7.2 Nylon tube or Rc3/8 steel pipe	12
C3	4GB410-15 4F510-15 4KB410-15	4GB420-15 4F520-15 4KB420-15	SC1-15	SLW-15A	Rc1/2 steel pipe	27
C4	4GB410-15 4F510-15 4KB410-15	4GB420-15 4F520-15 4KB420-15	SC-20A	SLW-15A	Rc1/2 steel pipe	38
D1	4F610-20	4F620-20	SC-20A	SL-20A	Rc3/4 steel pipe	64
D2	4F710-20	4F720-20	SC-20A	SL-20A	Rc3/4 steel pipe	80
D3	4F710-25	4F720-25	SC-25A	SL-25A	Rc1 steel pipe	112

Effective cross-sectional area for steel pipes and nylon tubes, and recommended max. flow rate for gas pipes

Effective cross-sectional area of steel pipe

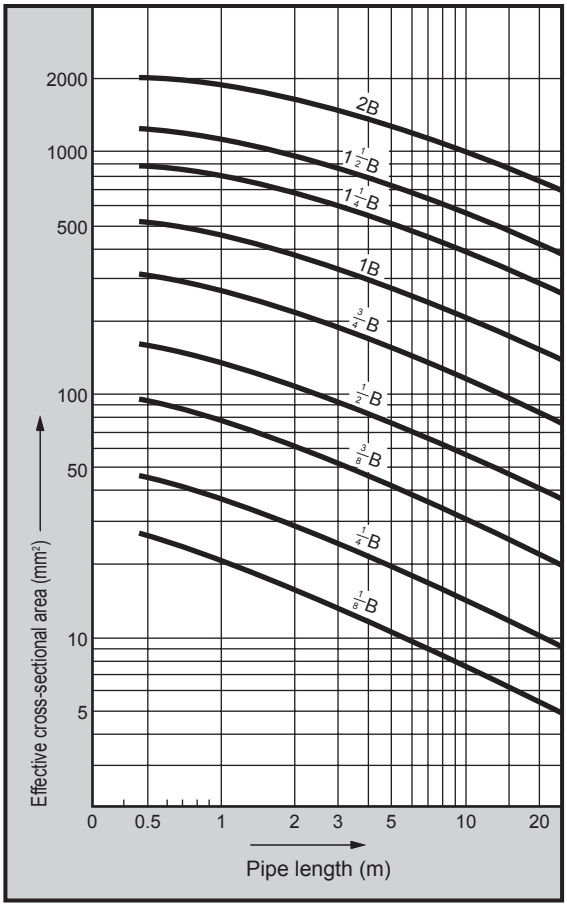

Effective cross-sectional area of nylon tube

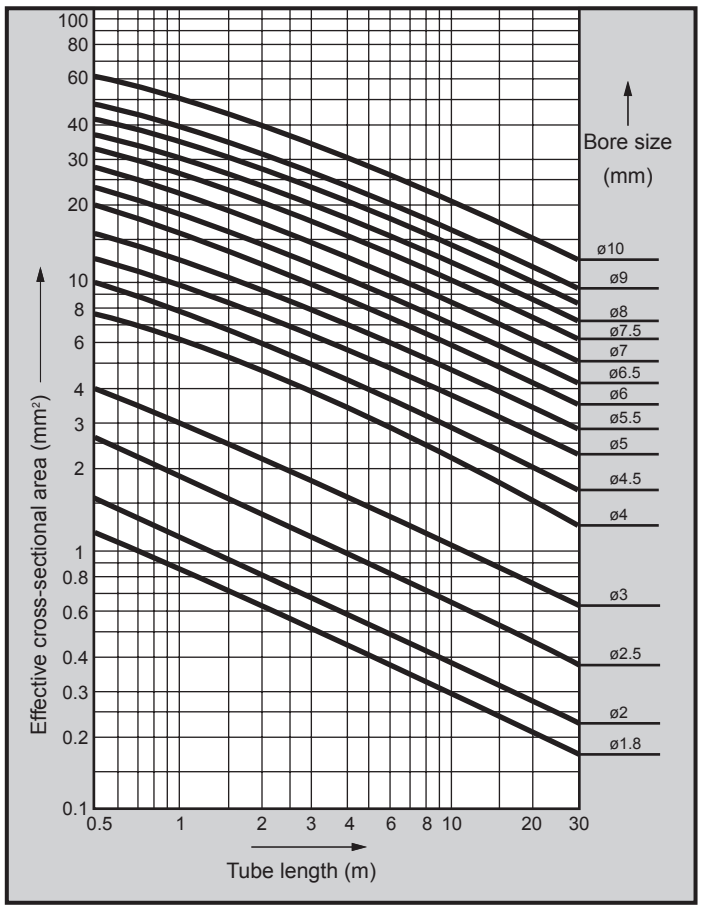

Recommended max. flow rate table of gas tube

Nominal size	1/8B	1/4B	3/8B	1/2B	3/4B	1B	1 1/4B	1 1/2B
Pressure drop MPa (*1)	0.124	0.0707	0.0576	0.0425	0.0276	0.0209	0.0133	0.0105
Inlet pressure MPa	Recommended max. flow rate (ℓ/min)							
0.05	127	244	518	838	1,465	2,460	3,870	5,150
0.1	146	282	598	965	1,690	2,828	4,460	5,950
0.15	163	314	668	1,076	1,885	3,150	4,960	6,630
0.2	179	344	730	1,180	2,060	3,450	5,430	7,280
0.3	206	395	840	1,360	2,375	3,900	6,300	8,400
0.4	230	442	940	1,520	2,660	4,450	7,000	9,360
0.5	252	485	1,030	1,660	2,920	4,875	7,700	10,250
0.6	272	523	1,110	1,800	3,140	5,250	8,300	11,050
0.7	292	558	1,185	1,920	3,350	5,620	8,870	11,800
0.8	308	592	1,260	2,035	3,560	5,970	9,430	12,570
0.9	324	623	1,325	2,140	3,745	6,290	9,900	13,220
1.0	340	654	1,395	2,250	3,930	6,600	10,400	13,880
1.2	370	717	1,510	2,450	4,280	7,150	11,250	15,040
1.4	398	763	1,625	2,624	4,590	7,700	12,100	16,200
1.5	410	790	1,680	2,710	4,740	7,930	12,550	16,780

(*1: Inlet pressure = 0.5 MPa
Gas pipe length: 10 m)

(Remarks)

In the main line where the piping distance tends to increase, it is necessary to consider a pressure drop occurring at the end of the main line when air passes.

The recommended max. flow rate refers to the max. flow rate that can be recommended in the range of allowable pressure drop with respect to piping length, determined from actual use.

This does not mean that a higher flow is not possible, but rather that the pressure will further decrease if the flow exceeds this value.

Flow characteristics display method

1. Flow characteristics display

The catalog specifications indicate the flow rate as follows.

Applicable components	Indicator	Unit	Standards
Pneumatic components	New JIS compliant indication	C, b	ISO 6358:1989 "Pneumatic fluid Components -Flow characteristics test method"JIS B 8390:2000 (ISO 6358 translation)
	Conventional indication	S	JIS B 8373:1993 "Pneumatic 2-port solenoid valves" JIS B 8374:1993 "Pneumatic 3-port solenoid valves" JIS B 8375:1993 "Pneumatic 4, 5-port solenoid valve" JIS B 8379:1995 "Pneumatic noise reduction device"
		Cv	ANSI(NFPA)T3. 21. 3:1990

2. Explanation

The flow characteristics of the solenoid valves were conventionally indicated with the effective cross-sectional area S. However, JIS was revised (JIS B 8390:2000), and these are now indicated with the sonic conductance C and critical pressure ratio b.

- Sonic conductance C: Value obtained by dividing the passage weight flow of the component in the choke flow by the sum of the upstream absolute pressure and standard state density. (sonic conductance) S ≈ 5.0 C (Conventional sizing is possible with C.)
- Critical pressure ratio b: Pressure ratio at which choked flow results if smaller than this value (downstream pressure/upstream pressure) (critical pressure ratio)
- Effective cross-sectional area S (mm^2): The value of the ideal restricted cross-sectional area without friction or compressed flow, calculated from the pressure changes inside the air tank when the choke flow is released from the components mounted on the air tank.

* Choke flow: Flow at which upstream pressure is higher than downstream pressure, and speeds at certain sections of components reach acoustic velocity. The fluid's mass flow rate is proportional to the upstream pressure, and is not dependent on downstream pressure. (Choked flow)

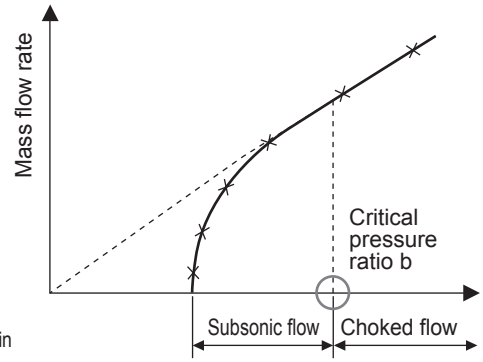

Fig. 1 Mass flow characteristics for upstream pressure

Flow rate formula

Depending on the actual unit, they are shown as follows.

$\frac{P_2+0.1}{P_1+0.1}$ Choked flow when ≤ b

$$Q=600\times C(P_1+0.1)\sqrt{\frac{293}{273+t}} \quad .....(1)$$

$\frac{P_2+0.1}{P_1+0.1}$ Subsonic flow when >b

$$Q=600\times C(P_1+0.1)\sqrt{1-\left[\frac{\frac{P_2+0.1}{P_1+0.1}-b}{1-b}\right]^2}\sqrt{\frac{293}{273+t}} \quad .....(2)$$

Q : Air flow rate [dm^3/min(ANR)], SI unit dm^3 (cubic decimeter) can also be expressed with ℓ (liter). $1dm^3 = 1ℓ$
C : Sonic conductance [dm^3/(s·bar)]
b : Critical pressure ratio [-]
P_1 : Upstream pressure [MPa]
P_2 : Downstream pressure [MPa]
t : Temperature (°C)

To calculate effective cross-sectional area S, substitute the value C obtained with C = S/5 above in the above formula.
For subsonic flow, substitute b = 0.5 in formula (2).

Degree of protection

● Degree of protection

■ IEC (International Electrotechnical Commission) standards (IEC60529)

■ JIS C 0920 : 2003

IP-□ □

Degree of protection (International Protection)

1st characteristic No. (degree of protection for foreign solid matter)

1st character No.	Degree of protection	
0	No protection	Without protection
1	ø50 mm	Protection against inflow of solids 50 mm and over in diameter
2	ø12.5 mm	Protection against inflow of solids 12.5 mm and over in diameter
3	2.5 mm	Protection against inflow of solids 2.5 mm and over in diameter
4	1 mm	Protection against inflow of solids 1.0 mm and over in diameter
5	Dust-proof	No inflow of dust at levels adversely affecting normal device operation or safety
6	Dust proof	No inflow of dust

2nd characteristic No. (degree of protection for water entry)

2nd character No.	Degree of protection	
0	No protection	
1	Protection against water dripping	No harmful effects from water dripping vertically.
2	Protection against dripping water tilted at an angle of up to 15° 15°	Water dripping vertically has no adverse effect when the product is tilted at an angle of up to 15° from its normal position.
3	Protection for watering	Water falling as a spray at any angle up to 60° from the vertical has no adverse effect.
4	Protection against splashing water	Water splashing against the product from any direction has no adverse effect.
5	Protection against water jets	No harmful effects occur even when water is sprayed with nozzles from all directions.
6	Protection against powerful jets	Water projected in powerful jets against the product from any direction has no adverse effect.
7	Protection against immersion	Water will not enter the product even when it is immersed in water under defined conditions.
8	Protection against immersion	The product can be used for continuous immersion in water.

MEMO

Safety Precautions

Be sure to read this section before use.

When designing and manufacturing equipment using CKD products, the manufacturer is obligated to ensure that the safety of the mechanism, pneumatic control circuit and/or water control circuit and the system that runs the electrical controls are secured.
It is important to select, use, handle and maintain CKD products appropriately to ensure their safe usage.
Observe warnings and precautions to ensure device safety.
Check that device safety is ensured, and manufacture a safe device.

WARNING

1 This product is designed and manufactured as a general industrial machine part.
It must be handled by an operator having sufficient knowledge and experience.

2 Use this product in accordance with specifications.

This product must be used within its stated specifications. In addition, never modify or additionally machine this product.
This product is intended for use in general industrial machinery equipment or parts. It is not intended for use outdoors (except for products with outdoor specifications) or for use under the following conditions or environments.
(Note that this product can be used when CKD is consulted prior to its usage and the customer consents to CKD product specifications. The customer should provide safety measures to avoid danger in the event of problems.)

❶ Use for applications requiring safety, including nuclear energy, railways, aircraft, marine vessels, vehicles, medical devices, devices or applications in contact with beverages or foodstuffs, amusement devices, emergency cutoff circuits, press machines, brake circuits, or safety devices or applications.
❷ Use for applications where life or assets could be significantly affected, and special safety measures are required.

3 Observe organization standards and regulations, etc., related to the safety of the device design and control, etc.

ISO4414,JIS B 8370(Pneumatic fluid power - General rules and safety requirements for systems and their components)
JFPS2008(Principles for pneumatic cylinder selection and use)
Including the High Pressure Gas Safety Act, Industrial Safety and Health Act, other safety rules, organization standards and regulations, etc.

4 Do not handle, pipe, or remove devices before confirming safety.

❶ Inspect and service the machine and devices after confirming safety of the entire system related to this product.
❷ Note that there may be hot or charged sections even after operation is stopped.
❸ When inspecting or servicing the device, turn OFF the energy source (air supply or water supply), and turn OFF power to the facility. Discharge any compressed air from the system, and pay enough attention to possible water leakage and leakage of electricity.
❹ When starting or restarting a machine or device that incorporates pneumatic components, make sure to secure system safety, such as pop-out prevention measures.

5 Observe the warnings and cautions on the following pages to prevent accidents.

■ Precautions are ranked as “DANGER”, “WARNING”, and “CAUTION” in this section.

DANGER:	In the case where the product operation is mishandled and/or when the urgency of a dangerous situation is high, it may lead to fatalities or serious injuries.
WARNING:	A dangerous situation may occur if handling is mistaken, leading to fatal or serious injuries.
CAUTION:	A dangerous situation may occur if handling is mistaken, leading to minor injuries or property damage.

Note that some items indicated with “CAUTION” may lead to serious results depending on the conditions.
All items contain important information and must be observed.

Warranty

1 Warranty period

The product specified herein is warranted for one (1) year from the date of delivery to the location specified by the customer.

2 Warranty coverage

If the product specified herein fails for reasons attributable to CKD within the warranty period specified above, CKD will promptly provide a replacement for the faulty product or a part thereof or repair the faulty product at one of CKD's facilities free of charge.
However, following failures are excluded from this warranty:

1) Failure caused by handling or use of the product under conditions and in environments not conforming to those stated in the catalog, the Specifications, or the Instruction Manual.
2) Failure caused by use of the product exceeding its durability (cycles, distance, time, etc.) or caused by consumable parts.
3) Failure not caused by the product.
4) Failure caused by use not intended for the product.
5) Failure caused by modifications/alterations or repairs not carried out by CKD.
6) Failure caused by reasons unforeseen at the level of technology available at the time of delivery.
7) Failure caused by acts of nature and disasters beyond control of CKD.

The warranty stated herein covers only the delivered product itself. Any loss or damage induced by failure of the delivered product is excluded from this warranty.
Note: For details on the durability and consumable parts, contact your nearest CKD sales office.

3 Compatibility check

The customer is responsible for confirming the compatibility of CKD products with the customer's systems, machines and equipment.

Precautions for export

1 Security Trade Control

The products in this catalog and their related technologies may require approval before export or provision.
For the sake of maintaining world peace and safety, there may be cases in which approval under the Foreign Exchange and Foreign Trade Control Law is required in advance, depending on the country to where the product or related technology is being exported or provided.
The scope of products and related technologies requiring approval are listed in the Export Trade Control Order Appendix Table 1 or Foreign Exchange Order Appendix Table.
The Export Trade Control Order Appendix Table 1 and Foreign Exchange Order Appendix Table contain the following two types of information.

· "List controls" specified for items 1 to 15
· "Catch-all controls" that do not indicate specifications by item, but restriction by application (Section 16)

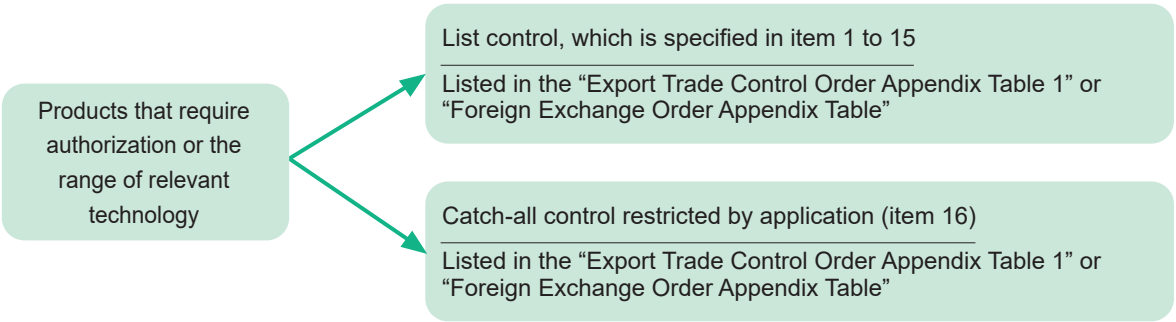

An application for approval is received by the Security Export Licensing Division of the Ministry of Economy, Trade and Industry or local bureaus of the Ministry of Economy, Trade and Industry.

2 Products and related technologies in this catalog

The products and related technologies in this catalog are subject to the catch-all control of the Foreign Exchange and Foreign Trade Control Law.
When exporting or providing the products or related technologies in this catalog, ensure that they are not used for arms or weapons.

3 Contact

Contact your local CKD Sales Office for information on the Security Trade Control of products and related technologies in this catalog.

* Refer to Intro Page 80 for cylinder switch.

Design/selection

1. Checking the specifications

⚠ WARNING

■ Use the product in the range of conditions specified for the product.
The product in this catalog is designed for use only in a compressed air system. Use with pressure or temperature exceeding the specifications range may result in damage or operation faults. (Refer to specifications) Contact CKD when using fluids other than compressed air and low hydraulic pressure.

■ If dimensional accuracy is required, contact CKD for specific details.
The dimensional tolerance of the pneumatic cylinder is adjusted based on JIS B 8368.
If higher accuracy is required, contact CKD in advance.

2. Safety design

⚠ WARNING

■ With the cylinder, there is the risk of the piston rod popping out in cases when a change of force occurs due to disruption of the sliding portions of the machine.
This could cause physical harm, such as pinched hands or feet, or mechanical damage. Adjust the machines so that they operate smoothly and design so that physical harm will be avoided.

■ If there is a risk of bodily injury, install a protective cover.
If the cylinder's drive section could cause bodily injury, install a protective cover. Design a structure that prevents person(s) from entering the cylinder's operating range or coming into contact with those sections directly.

■ Consider the possibility that the circuit pressure may be decreased by electrical power failure.
When using a cylinder in clamp mechanisms, blackouts, etc., may cause the circuit pressure to drop, reducing the clamping force and risking falling workpieces. Incorporate a safety device that prevents physical harm or mechanical damage. Suspension mechanisms and lifting devices should also be considered for position locking.

■ Consider the possibility of power source failure.
For devices controlled with power sources such as pneumatics, hydraulics, or electricity, take measures to prevent bodily injury or machine damage if power fails.

■ Design the operating circuit at emergency stop.
If one side of the piston is pressurized after the air in the cylinder is released, such as when the cylinder is driven by an exhaust center type directional control valve, or during startup after the residual pressure in the circuit is discharged, the driven object will pop out at high speed. This could cause physical harm, such as pinched hands or feet, or mechanical damage. Design with a circuit to prevent popping out.

■ Consider the operation status at emergency stop.
If the safety device is activated and the machine stops during a system failure such as emergency stop or power outage, design the system so that physical harm or damage to the workpiece/device/equipment does not occur due to cylinder operation.

■ Consider the operation status when restarting after emergency stop or abnormal stop.
Design the system so that bodily injury or equipment damage will not occur when restarting.
If there is a need to reset the cylinder to the starting position, design a safe control device.

■ Take measures to prevent physical harm or property damage in the event of failure of this product.

⚠ CAUTION

■ Do not use in a range where the piston could collide with the stroke end and break.
If a piston collides against the cover at the stroke end and stops due to inertia, use within the range of allowable absorbed energy.

■ Mount a speed controller on the cylinder.
Use each cylinder within the applicable working piston speed range.

■ Install a "pressure switch" and "residual pressure exhaust valve" on the device's compressed air supply side.
● The pressure switch will disable operation until the set pressure is reached. The residual pressure exhaust valve releases compressed air into the pneumatic pressure circuit to prevent accidents caused by operation of pneumatic components under residual pressure.

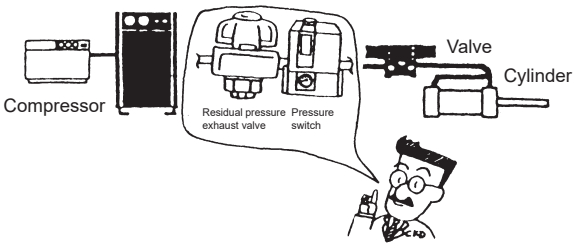

■ Position locking cylinder load factor must be 50% or less.

3. Design by application

⚠ WARNING

■ If requiring deceleration circuit and shock absorber.
If the driven object moves at high speeds or is very heavy, it may be difficult to absorb impact with the cylinder cushion alone. Take measures to ease impact by installing a deceleration circuit before the cushion or by using an external shock absorber. The machine's rigidity must also be considered.

■ If inertia, vibrations, etc., are generated
When mounting the cylinder on a moving object (X-axis module, pallet, etc.), design while keeping in mind the inertia and vibration that are generated when the moving object is stopped.

■ Intermediate stop
When braking the cylinder's piston with a 3-position closed center directional control valve, air compressibility may make it difficult to stop as accurately as when using low hydraulics. In addition, since valves and cylinders do not guarantee zero air leakage, holding the stop position for long periods may not be possible. Consult with CKD when requiring a stop position to be held for long periods.

4. Working environment

WARNING

■ Install the product where it will not be exposed to rain, water, direct sunlight, or high temperatures.

■ Do not use this product in a corrosive environment.
Use in such an environment could lead to damage or operation failure. Though piston rods, tie rods, etc. used in the cylinder are plated materials, machining parts (thread surface width, cut surface) are not plated. Implement measures as necessary since rust occurs even in normal environments.

■ Attach a cover in dusty places or places exposed to water, oil, cutting oil, or coolant.
Use a rubber scraper if extremely dusty. Use a coolant proof type if liquid could splatter onto the product.

■ If ambient temperature is less than 5°C, moisture in the circuit could freeze and lead to misoperation, etc.

CAUTION

■ When using the cylinder with valve with AC voltage, a thrumming noise may be heard depending on the working conditions. If the noise is a problem because of the working environment, select DC voltage.

■ Some models use oil-impregnated bearings, and oil may be discharged outside of the cylinder. Do not use in places susceptible to oil.

5. Durability

WARNING

■ Durability differs based on working conditions and model features.

CAUTION

■ Bellows are consumable parts.
Replace if necessary.

6. Pneumatic source

WARNING

■ Use clean dry compressed air.
Do not use the compressed air if it contains chemicals, synthetic oils containing organic solvents, salt, or corrosive gas, as it can cause damage and/or operation failure.

CAUTION

■ Use dry compressed air that does not cause moisture inside the piping.

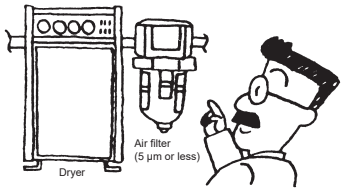

- Moisture will occur if the temperature drops in the pneumatic piping or pneumatic components.
- Piping volume is cylinder volume(Atmospheric pressure converted volume) In the larger case, the compressed air in the cylinder will not be completely exhausted when changing with the solenoid valve. This compressed air will condense, form water drops, and cause drainage.
- Operation failure could occur if moisture enters the air flow path of pneumatic components and temporarily blocks passage.
- Moisture could cause rust, causing pneumatic components breakdowns.
- The drain will flush the lubricant oil and cause a lubrication defect.

■ Ultra dry air is not suitable for standard pneumatic components. Use ultra dry air compatible devices.
- Ultra dry compressed air will shorten the life of pneumatic components.
- Use a solenoid valve for DC voltage drive.

■ Use compressed air that does not contain oil oxides, tar, carbon, etc., from the air compressor.
- If oil oxides, tar, or carbon enter the pneumatic components and solidify, resistance at the sliding section will increase, leading to operation failure.
- If the supplied lubricant mixes with oil oxides, tar, carbon, etc., the sliding section of the pneumatic component could be worn down.

■ Use compressed air that does not contain solid foreign matter.
- Solid foreign matter in the compressed air could enter the pneumatic components and cause wear at the sliding section or hydraulic locking. Therefore, install an air filter with a filtration level of 5 μm or less.
- Regularly perform compressor maintenance and inspection.

7. How to use

CAUTION

■ Since it is pre-lubricated, it can be used without lubrication. Lubricate with Class 1 turbine oil (non-additive) ISOVG32. If stopped in the middle, it leads to malfunction as the initial lubricant is used up, so be sure to continue lubrication for operation. Decide on lubrication or no-lubrication specifications for the pneumatic components and ensure that implementation of the corresponding method is reliably managed.

■ Provide intermediate support for a cylinder with long stroke.
If the cylinder has a long stroke, provide an intermediate support to prevent rod damage due to rod drooping, tube sag, vibration, or external loads.

■ Use within the max. stroke for the mounting type.
Refer to Ending Page 70.

■ Speed changes occur at startup in the cylinder with air cushion.

When the cushion ring slips off the cushion packing at startup, speed changes occur in the cylinder with air cushion.
As the changes may increase depending on conditions such as the speed controller's layout and adjustment, piping diameter, air pressure, and cushion needle opening, consult CKD if prevention is required.

■ Make every effort to avoid using multiple synchronized cylinders.

If not synchronized, the piston rod could twist and lead to malfunctions. If synchronized operation is required, be sure to provide a rigid guide device separately.

■ For mounting of clevis and trunnion, check for free rotation without interference during full stroke operation of the cylinder before use.

■ Use an oscillating cylinder (clevis or trunnion) that can rotate at the cylinder angle, if the load movement direction changes with the operation. Install the bracket at the end of the rod so that it moves in the same direction as the cylinder body.

■ Do not couple the fixed cylinder with a rotating arm for use. In this case, connect an oscillating cylinder to the arm.

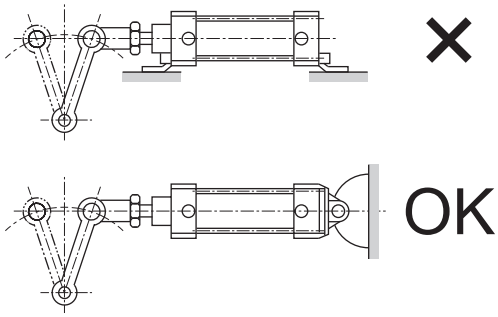

■ To avoid damage to the piston rod end thread or wear and seizing of the bush, etc., connect the end of the piston rod and load with a floating fitting or simplified floating fitting so twisting does not occur at any position in the stroke.

■ If the gap between clevis or trunnion and the corresponding bearing is large, the pins and shaft will bend. Therefore, keep this gap relatively small. (Recommended fit: H10/e8)

■ In the figure below, if the height H from the mounting surface of the bearing bracket to the bearing position is high, a large force is generated on the bracket mounting parts by the cylinder force, causing damage to bolts, etc.

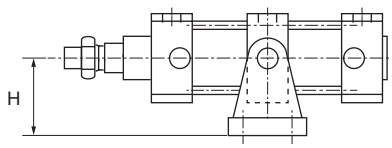

■ The cylinder may have small amounts of oil oozing out from the sliding section/packing/gasket. Do not use in places susceptible to oil.

■ Precautions for use of pressure relief port
The exhaust port (P72) cannot be used for vacuum treatment. The reverse cannot be performed as well. Be sure not to do this because this could cause dispersion of particles or malfunctions.

8. Securing of space

⚠ CAUTION

■ Secure sufficient space around the cylinder for installation, removal, wiring, and piping work.

9. Statement in the instruction manual

⚠ CAUTION

■ Indicate the maintenance conditions in the device's instruction manual.

● The product's performance may drop too low to maintain an appropriate safety level depending on usage conditions, working environment and maintenance status. With correct maintenance, the product functions can be used to the fullest.

Mounting, installation and adjustment

1. Installation

⚠ WARNING

■ Protect the load from falling or toppling when the cylinder is installed or removed.

⚠ CAUTION

■ Remove the cylinder packaging and dust-proof seal of the piping port just before starting piping.
- Removing the dust-proof seal of the piping port before the piping work starts could allow foreign matter to enter the cylinder from the piping port and cause failure or misoperation.

■ Use suspension fittings if the cylinder weighs 15 kg or more.

■ Do not hit the cylinder tube and piston rod sliding section with anything or sandwich objects between them, causing scratches or dents.
The bore size is manufactured with precise tolerance, and operation faults could occur with even the slightest deformation. Scratches or dents on the sliding portion of the piston rod will cause damage of the packing, etc., and may lead to air leakage.

■ If the direction that the load moves in is not parallel to the piston rod shaft center, the piston rod and body (tube) could twist and cause the piston rod to pop out. Twisting can cause seizing, damage, etc. Always align the piston rod shaft center and load movement direction.

■ Prevent seizing at rotating sections.
Apply grease to rotating sections (pins, etc.) to prevent seizing.

2. Pneumatic source

⚠ CAUTION

■ Install a pneumatic filter just before the pneumatic component in the circuit.
- To remove moisture in the pipes, attach an air dryer and filter. Install a filter near the directional control valve (primary side) to remove rust, foreign matter and drainage.

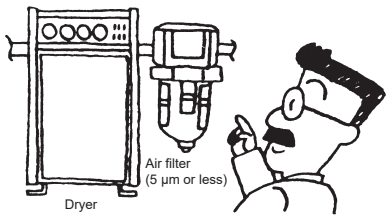

■ When supplying compressed air after connecting pipes, do not suddenly apply high pressure.
- The pipe connection could dislocate, causing the pipe tube to fly out, leading to accidents.
- If compressed air is supplied too slowly, sealing pressure may not be generated by the sealing mechanism in the solenoid valve. This can lead to air leaks.
- The cylinder may operate suddenly.

3. Piping

⚠ CAUTION

■ When piping, refer to the instruction manual and make sure not to use the wrong connection port.
- This could cause improper operation.

■ When connecting pipes, wrap sealing tape clockwise from the inside position to within 2 threads from the pipe end.
- If sealing tape protrudes from the pipe threads, it could be cut when screwing the bolts in. This could cause the tape to enter the valve, causing failures.

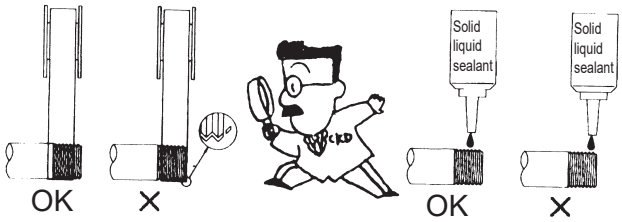

■ Check that the piping connected to the cylinder is not dislocated due to vibration, looseness, or tension.
- Cylinder speed cannot be controlled if pneumatic circuit exhaust piping is dislocated.
- When using the chuck holding mechanism, the chuck may be released, creating a hazardous state.

■ Observe the following precautions when using nylon tubes or urethane tubes for piping material.
- Use flame-resistant tubes or metal pipes in an environment where spattering may occur.

■ Use corrosion-proof materials such as galvanized pipes, stainless steel pipes, nylon pipes or rubber pipes for piping material.

■ Use appropriate torque to tighten the pipes when connecting them.

- The purpose is to prevent air leakage and damage to bolts.
- First tighten the bolts by hand to ensure that the threads are not damaged, then use a tool.

[Reference value] Refer to instruction manual.

Port thread	Tightening torque (N·m)
M3	0.3 to 0.6
M5	1 to 1.5
Rc 1/8	3 to 5
Rc 1/4	6 to 8
Rc 3/8	13 to 15
Rc 1/2	16 to 18
Rc 3/4	19 to 40
Rc 1	41 to 70

■ Always flush just before piping pneumatic components.

- Any foreign matter that has entered during piping must be removed so it does not enter the pneumatic components.

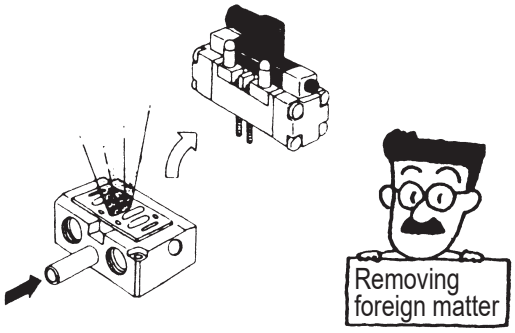

4. Pre-operation confirmation

⚠ WARNING

■ Check load and cylinder installation connection for looseness and other abnormalities before starting operation.

■ Do not use the device until proper operation is confirmed.
After installation, repair, or modification, connect compressed air or electric power and conduct appropriate functional and leakage inspection to confirm that installation is correct.

■ Confirm that there is no machine interference and that the actuation system is normal.

■ Confirm that there is no abnormality in device operation, and gradually raise and set pressure.

■ If operation is started while the exhaust side is at atmospheric pressure, the rod could pop out and cause a dangerous situation. Apply pressure to the cylinder chamber on the exhaust side before starting.

⚠ CAUTION

■ Before supplying compressed air after connecting pipes, check that there are no air leaks at any pipe connections.

- Apply a leakage detection agent to pipe connections with a brush and check that there are no air leaks.

■ Be sure to read the instruction manual carefully.
Read carefully and fully understand contents before starting use. Store so as to allow confirmation at any time.

5. Adjustment

⚠ WARNING

■ When adjusting speed with the speed controller, gradually open the needle from the closed state and adjust. If speed is adjusted in the opened state, the rod could pop out, creating a hazard.

■ The effect of the cushion with air cushion is adjusted at shipment. However, re-adjust the cushion needle for use in accordance with the size of the load and piston speed.
Gradually open the needle from the closed state and adjust the effect of the cushion. If the cushion needle is loosened too much, the cushion cannot function and may fall off. After making adjustments, tighten the needle nut (hex nut) to fix the unit in place. Use kinetic energy within the allowable value. The product may be damaged if allowable values are exceeded.

■ When the cylinder is in operation, do not enter or put your hand into its operating range.

Use/maintenance

1. Maintenance and inspection

⚠ WARNING

■ Refer to the instruction manual and conduct careful maintenance and inspection.
Incorrect handling could result in device or system damage or operation faults.

⚠ CAUTION

■ Conduct daily inspections and regular inspections to ensure that maintenance control is done correctly.
● If maintenance is not correctly managed, the product's functions could deteriorate markedly and lead to a shortened service life, faults and accidents.

(1) Supplied compressed air pressure control
● Is the set pressure supplied?
Does the pressure gauge indicate the set pressure while the equipment is operating?

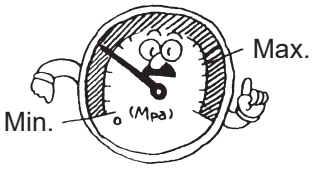

(2) Pneumatic filter control
● Is the drain correctly discharged?
Is the bowl or element clean enough to use?

(3) Control of compressed air leaks from piping connections
● Is the state of the connection, especially at movable sections, normal?

(4) Solenoid valve operational status control
● Are operations delayed? Is exhaust normal?

(5) Control of pneumatic actuator operation
● Is operation smooth?
Is the end stop state normal?
Is coupling with the load normal?

(6) Lubricator control
● Is the oil volume adjustment normal?

(7) Lubricant control
● Is the lubricant that is being supplied an official item?

■ Do not use if air leakage rate increases or the device does not operate correctly.
● After repair or modification, connect compressed air and electricity, and conduct functional and leakage inspection to confirm that operation is normal.

■ When restarting after not using for a long period of time, check that operation is normal.

■ Replace repair parts beyond the rated service life with new parts during periodic inspection.
Do not use repair parts after 5 years or more of storage.

■ Store repair parts in a cool, dark place not exposed to direct sunlight.

■ If the lubrication of the sliding surface is worsened or dry, periodically grease up the lithium grease (standard) or fluorine grease (heat resistance, low-speed, low friction, P7, etc.). Before applying grease, remove any foreign matter on the sliding surface. Contact CKD if the working grease is unknown.

2. Influence of fluorine grease

⚠ WARNING

■ Smoking with hands smeared with the fluorine grease of cylinders using fluorine grease (such as heat resistance, low-speed, low friction, P7) could generate harmful gases and cause physical harm.

3. Removal

⚠ WARNING

■ Component removal and supply/exhaust of compressed air
Before removing the device, take measures to prevent the driven object from falling or running out of control, and shut OFF air and power. Exhaust all compressed air in the system beforehand. Before restarting, confirm that measures are taken to prevent popping out.

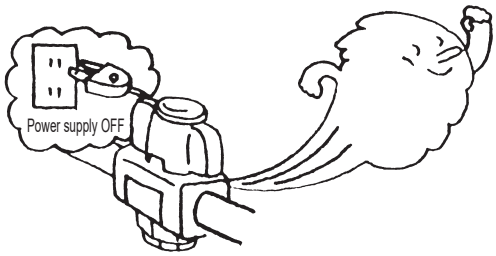

■ When removing double rod cylinder load, lock the load side piston rod using the WAF (Width Across Flats) on the end. If the load side piston rod is not locked, note that the fastening part (screw-in part) of the piston rod may loosen.

■ Take measures so that the load does not fall or drop when the cylinder is removed.

4. Disassembly/assembly

⚠ WARNING

■ Remove cylinders from the equipment before disassembly.

■ Products must be disassembled and assembled by qualified personnel.
After disassembling or reassembling, carry out leakage inspections and operation inspections before reassembling to the device.

■ Note that when disassembling a single acting cylinder, the spring could cause parts to pop out.

■ Use appropriate pliers (C-snap ring mounting tool) to install and remove rod metal.

■ Even in cases when appropriate pliers (C-snap ring mounting tool) are used, be careful as the snap ring may pop out at the tip of the pliers (C-snap ring mounting tool) and cause physical or equipment damage.
In addition, when mounting the unit, be sure that the unit fits securely into the snap ring groove before supplying air.

⚠ CAUTION

■ When performing maintenance such as repair part replacement, etc., disassemble or reassemble in a test bench with clean atmosphere free of dust, and carry out functional inspections to check whether the device is operating normally.

Design/selection

WARNING

■ Application, load current, voltage, temperature, impact, environment, etc., exceeding the specifications will result in damage or operation faults. Use the device as instructed in specifications.

■ Never use this product in an explosive gas atmosphere. The cylinder switch does not have an explosive-proof structure. Never use in an explosive gas atmosphere as explosions or fires could result.

CAUTION

■ Take care when using this product for an interlock circuit.

When using the cylinder switch for an interlock signal requiring high reliability, provide a double interlock by installing a mechanical protection function or a switch (sensor) other than a cylinder switch as a guard if problems occur.
Regularly inspect and confirm that the interlock activates correctly.

■ Pay attention to the contact capacity.

Do not use a load that exceeds the switch's specified voltage and current. This may lead to failure.

■ Pay attention to the contact protection circuit. (Reed switch)

● When an inductive load (relay or solenoid valve) is connected, a surge voltage is generated when the switch is turned OFF. Provide a contact protection circuit.

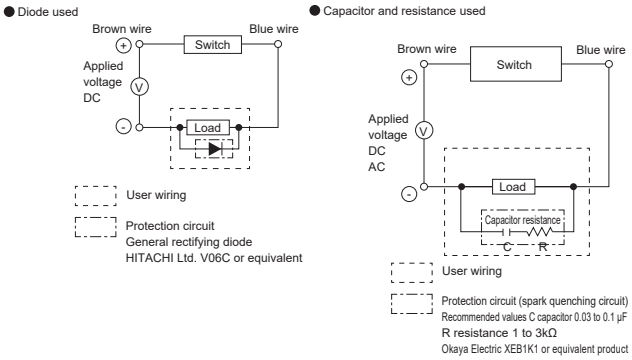

● When a capacitive load is connected, starting current is generated when the switch is turned ON. Provide a contact protection circuit.

● If the wiring increases, the wiring capacity will be reached and a rush current will occur, damaging the switch or shortening the service life. Provide a contact protection circuit if the wiring length exceeds Table 1.
If using at 200 VAC with T8, contact CKD since the usable wiring length may be shortened.

Switch	Voltage	Wiring length
M, T, K, H, V, F, ETO types	DC	50 m
M, T, K, H, V, ETO types	AC	10 m
RO, 5, 6, EO types	DC	100 m
RO, 5, EO types	AC	10 m
R4 type	AC	50 m

Table 1

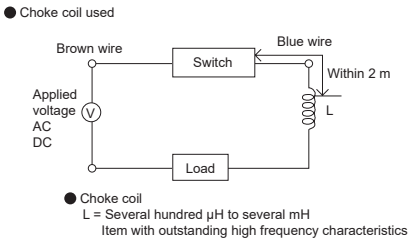

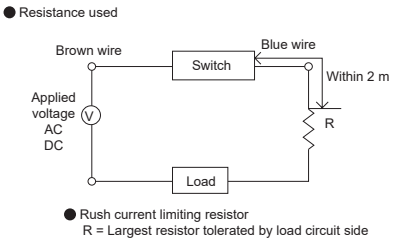

For specifications of contact protection circuits, refer to Ending Page 27.

■ Avoid using in an environment constantly exposed to water.

● Insulation failure can cause malfunctions.

■ Avoid using this product in environments containing oil or chemicals.

● The cylinder switch may be adversely affected (insulation failure, malfunction caused by swelling of the filled resin, hardening of lead wire sheath, etc.) if used in an environment containing oil, coolant, cleaning fluid, or chemicals. Consult with CKD.

● A coolant proof cylinder switch is available. Refer to “Guide to pneumatic devices compatible with coolants” (No. CC-N-375A) for details.

■ Do not use in a high-impact environment.

For reed switch, if a strong impact (294 m/s^2 or more) is applied while in use, the contact may malfunction by momentarily (1 ms or less) being connected or disconnected. It may be necessary to use a proximity switch depending on the working environment. Consult with CKD.

■ Do not use this product in surge generating areas.

If there are devices and components (solenoid type lifters, high frequency induction furnace, motors, etc.) around the cylinder with proximity switch that generate a large surge, consider surge protection of the source as it may lead to deterioration or damage of the switch internal circuit element.

■ Be careful of accumulation of iron powder and contact with magnetic substances.

If a large amount of iron chips such as cutting chips or welding spatter accumulate or if magnetic objects (material attracted to magnets) contact the cylinder with a cylinder switch, the cylinder will be demagnetized and cylinder switch operations may be inhibited.

⚠ CAUTION

■ Pay attention to the proximity of cylinders, etc.

- When installing more than one cylinder with switches in parallel, keep sufficient distance between the cylinder tubes according to the cylinder specifications.
  Mutual magnetic interference may cause the switch to malfunction.

■ Pay attention to magnetic environments.

- If surroundings contain a strong magnetic field or large current (large magnet, spot welding machine, etc.), use a strong magnetic field proof switch. (HO, HOY, T2YD)
  If a magnetic object is very close to the cylinder, mutual interference may occur and adversely affect detection accuracy.

■ In the mid-stroke position, pay attention to the ON time of the cylinder switch.

- When setting the cylinder switch at mid-stroke and driving a load with the piston movement, if the speed is too fast, the cylinder switch will function but operation time will be too short and the load may not respond correctly.
  The max. detectable piston speed is:

$$V(\text{mm/s}) = \frac{\text{Cylinder switch operating range (mm)}}{\text{Load operation time (s)}}$$

If the piston speed is too fast, use an off-delay output cylinder switch T2JH/V (models limited).

■ Pay attention to the serial connection usage method.

- When serially connecting several 2-wire switches, the switch voltage drop is the total voltage drop of all connected switches. The voltage applied to the load is the voltage obtained by subtracting the voltage drop at switches from the power supply voltage. Check load specifications and determine the number of switches.
- Connecting several 2-wire proximity switches in series may result in a malfunction. Contact CKD in advance. It is recommended to use reed switches.
- When connecting several 3-wire serial proximity switches, the switch voltage drop is the total voltage drop of all connected switches, as with the 2-wire switch. In addition, the current flowing to the switch is the sum of current consumption and load current of the switches connected as in the upper right figure. Check load specifications and determine the number of connections so as not to exceed the maximum load current of the switch.
- The indicator lamp turns ON only when all switches are ON.

Fig. 1: For R3 (Y)/M3 (W)/T3 (Y)/K3 (Y)/F3 (Y)

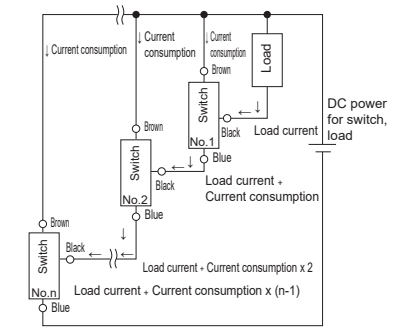

For T3P/K3P/M3P

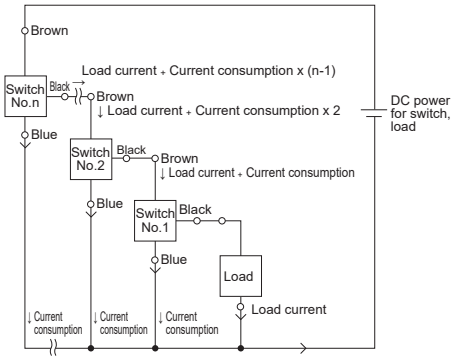

■ Pay attention to the parallel connection usage method.

- When connecting several 2-wire switches in parallel, note that leakage current increases in proportion to the number of connected units. Check load specifications and determine the number of connections.
- With the 2-wire proximity switch, when 1 switch changes from ON to OFF status, voltage at both ends of the switch connected in parallel drops to the internal voltage drop value when the switch is ON and goes below the load voltage range, so other switches will not turn ON. Therefore, check the input specifications of the programmable controller that is the connected load before use.
- Since the leakage current value of the 3-wire proximity switch is very small (10 μA or less), it should not be a problem for normal use.
- Note that switch's indicator lamp could dim or may not turn ON.

■ Output circuit protection (proximity switch)

● When an inductive load (relay or solenoid valve) is connected, surge voltage is generated when the switch is turned OFF. Provide the following protection circuit.

R1

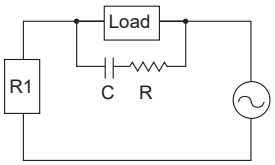

● Capacitor
C=0.03 to 0.1μF
● Resistance
R = 1 to 3 kΩ
Okaya Electric
XEB1K1 or equivalent product

R3(Y), M3(W), T3(Y), K3(Y), F3(Y)

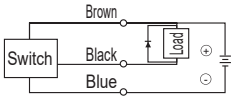

● Diode
D = HITACHI Ltd.
V06C or equivalent product

An example of using a surge absorbing element with inductive load.

● When a capacitive load is connected, starting current is generated when the switch is turned ON. Provide the following protection circuit.

R3(Y), M3(W), T3(Y), K3(Y), F3(Y)

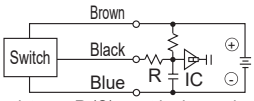

Resistance R (Ω) must be larger than the following equation in this case.

$\frac{V}{0.15}$ = R (Ω) (R3 (Y), M3 (W))

$\frac{V}{0.05}$ = R (Ω) (T3 (Y), K3 (Y), F3 (Y))

● Provide the following protective circuit if the lead wire length exceeds 10 m.

R1, R2(Y), M2(W), T2(Y/J), K2(Y), F2

● Choke coil used

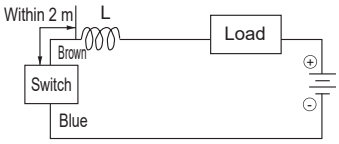

● Choke coil
L = Several hundred μH to several mH
Item with outstanding high frequency characteristics

● Resistance used

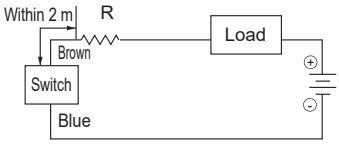

● Rush current limiting resistor
R = Largest resistor tolerated by load circuit side

● Resistance used
Within 2 m

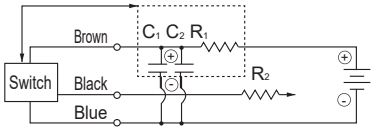

Power supply noise absorptive circuit
C_1 = 20 to 50μF
Electrolytic capacitor (Voltage resistance 50 V or more)
C_2 = 0.01 to 0.1μF
Ceramic capacitor
Rush current limiting resistor
R_1 = 20 to 30Ω
R_2 = Largest resistance tolerated by load circuit side used.

■ Pay attention to the service life of the reed switch.

● Although the service life of the reed switch differs depending on usage conditions, it is generally approx. several million times. The contact service life is reached sooner if the device is used continuously or operated at a high frequency. In this case, use a proximity switch with no contact.

Mounting, installation and adjustment

⚠ CAUTION

■ Do not drop or apply impact.

Do not drop, bump, or apply excessive impact (294 m/s² or more for reed switches, 980 m/s² or more for proximity switches). Even if the switch case is not damaged, switch components could break or malfunction.

■ Do not carry the cylinder by the switch's lead wire.

Never do this: it not only causes disconnection of lead wires, but since stress is applied to the internal switch, it may also damage the switch internal element.

■ Do not wire together with power lines or high voltage lines.

Avoid the use of parallel wiring or wiring in the same conduit as that of power lines or high voltage lines. Wire separately. The control circuit containing the cylinder switch could malfunction due to noise.

■ Do not short-circuit the load.

If turned ON in a state of load short-circuit, excess current will flow and the switch will be instantly damaged.

■ Pay attention to the lead wire connection.

Turn OFF power to the device in the electric circuit to be connected before starting wiring. If operated while the power is turned ON, it may cause accidents due to electric shock or unpredicted operation.

● Reed switch

Do not connect the switch lead wire directly to the power supply. Connect the load serially. Pay attention to the following (1), (2) for RO, MO, TO, KO, EO, FO, ETO.

(1) When used for DC, connect the brown wire on the positive (+) side and the blue wire on the negative (-) side. The switch will function when connected in reverse, but the indicator lamp will not turn ON. (There is no polarity for HO.)

(2) When connected to an AC relay or programmable controller input, conducting half wave rectification with that circuit may prevent the indicator lamp from turning ON. The indicator lamp will come ON when the switch lead's polarity is reversed.

● Proximity switch

Correctly connect the lead wires based on the color coding in the figure on the right.
Incorrect wiring could result in damage.

● R1

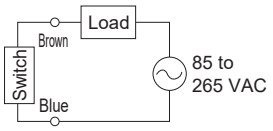

● R2 (Y), M2 (W), T2 (Y), T2J, K2 (Y), F2 (T2YD has no polarity)

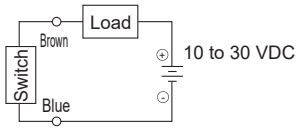

● R3(Y), M3(W), T3(Y), K3(Y), F3

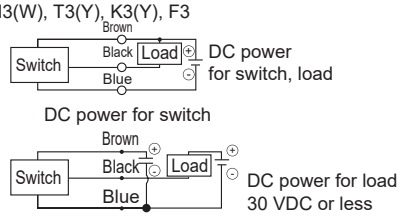

● T3P, K3P, M3P

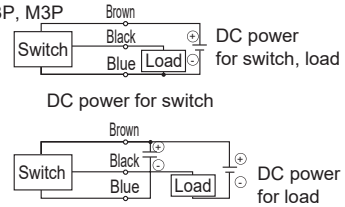

(Connection to programmable controller (PLC))

● Connection direction differs depending on the type of programmable controller. Connect based on input specifications.

● R1 connection to AC input

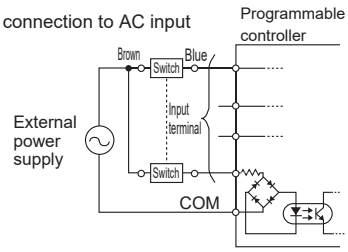

● Connection to source load input (external electric power supply)

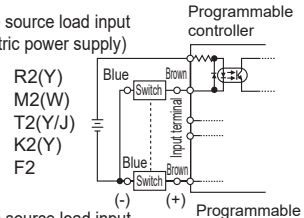

● Connection to source load input (internal electric power supply)

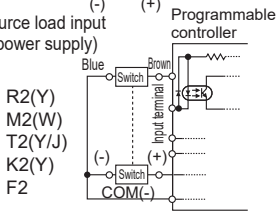

● Connection to sink input

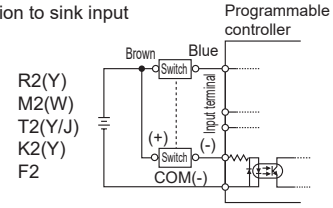

● Source input (External power supply) Connection to shape

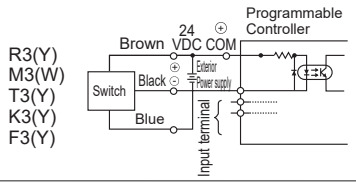

● Source input (Built-in power supply) Connection to shape

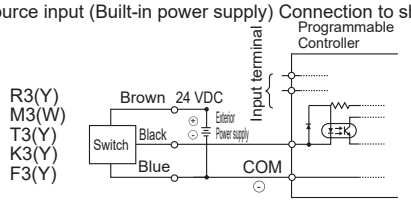

● Sink input (External power supply) Example of connection to type

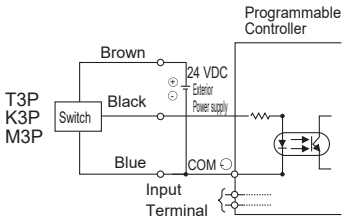

● Sink input (Built-in power supply) Example of connection to type

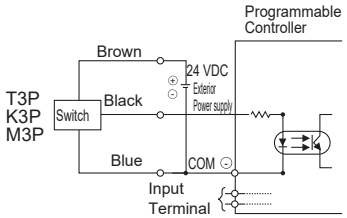

■ Set the switch to the center of the operation range.

Adjust the mounting position of the cylinder switch so that the piston stops at the center of the operating range (ON range). (Mounting position in the catalog shows the optimal position at stroke end.) If set at the end of the operating range (near the boundary line of ON, OFF), operation may become unstable.

■ Observe tightening torque when mounting the switch.

If the tightening torque range is exceeded, the set screw, mounting bracket, switch, etc., could be damaged.
In addition, if tightening the set screw with a torque less than the min. tightening torque, the switch mounting position could be displaced. (Refer to Ending Pages 42 and 43 for details on switch mounting, movement, tightening torque, etc.)

■ Pay attention to the terminal box wiring.

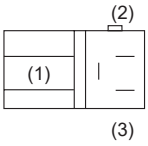

Model \ Terminal	(1)	(2)	(3)
R0 (DC),R2,R2Y,R6		+	-
R0 (AC),R1,R4,R5		±	±
R3,R3Y	OUT	+	-

■ Lead wire protection

The lead wire's min. bending radius is 9 mm or more (when fixed). Pay attention to wiring so repeated bending and tensile strain are not applied to the lead wire. Connect T2H/VR3 cylinder switch (models limited) with more flexible bend-resistant lead wire specifications to the moving parts for use.

■ Relay

Use the following or equivalent relays.

○OMRON Corporation ——— MY type
○Fuji Electric Co., Ltd. ——— HH5 type
○Tokyo Denki ——— MPM type
○Panasonic Co., Ltd. ——— HC type

1 . Precautions for "external force"

⚠CAUTION

■ When using the reed type in particular, the reed switch (glass tube) could be damaged or the sensitivity could be reduced.
Example: T0□ T5□ T8□

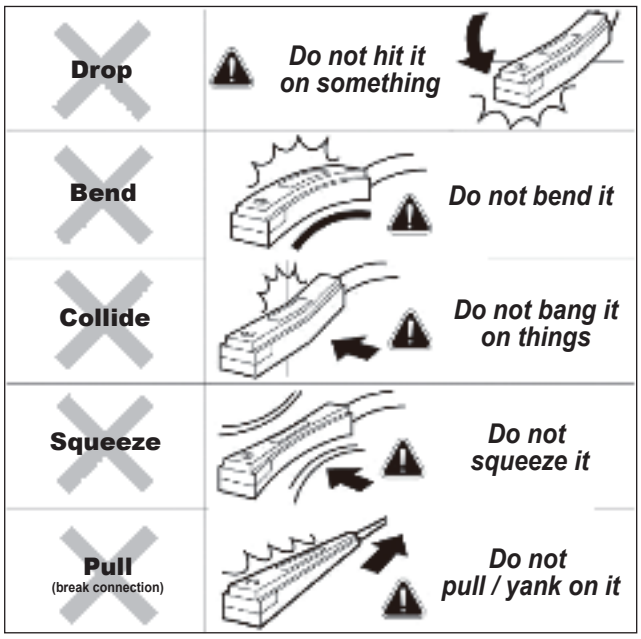

2 . Precautions regarding "overcurrent/overvoltage"

■ Do not connect directly to power supply.

■ Do not connect to the electromagnetic relay without a protection circuit.

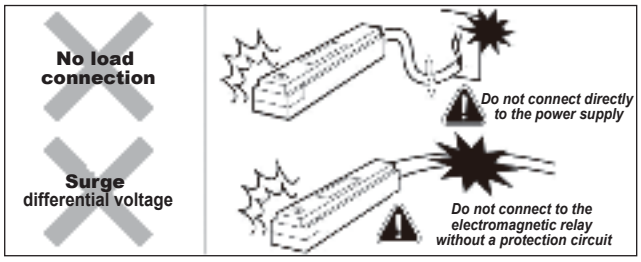

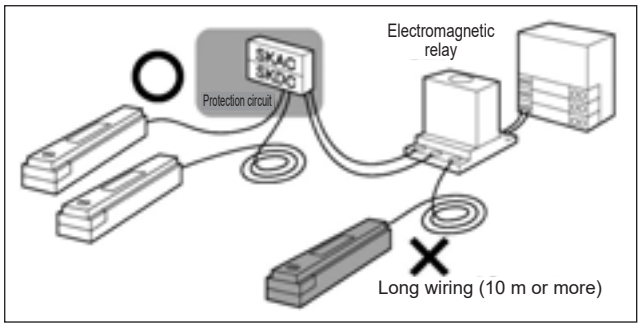

⚠ WARNING

■ Do not apply overcurrent.

If overcurrent flows to the cylinder switch because of a load short-circuit, etc., the cylinder switch will be damaged with a risk of ignition.
Provide an overcurrent protection circuit, such as a fuse, for the output wire and power cable as needed.

⚠ CAUTION

■ Pay attention to the reverse current caused by disconnected wires/wiring resistance.

● When other devices, including cylinder switches, are connected to the same power supply as the cylinder switch and the output cable and power cable are short-circuited or the power supply is disconnected to check operation of the input unit in the control panel, reverse current could flow to the cylinder switch's output circuit and cause damage.

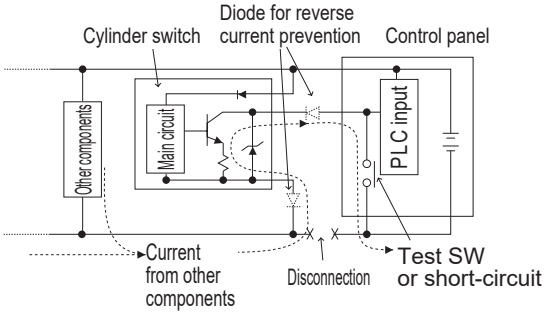

● Take the following measures to prevent damage caused by reverse current.

(1) Avoid centralizing current at the power cable, especially a negative power cable, and use as thick a cable as possible.
(2) Limit the number of devices connected to the same power supply as the cylinder switch.
(3) Insert a diode in serial with the cylinder switch's output cable to prevent reversal of current.
(4) Insert a diode in serial with the cylinder switch's power cable negative side to prevent reversal of current.

■ Pay attention to surge current leading.

● When cylinder switch power is shared with an inductive load that generates surges, such as a solenoid valve or relay, if the circuit is cut off while the inductive load is functioning, surge current could enter the output circuit and cause damage depending on where the surge absorbing element is installed.

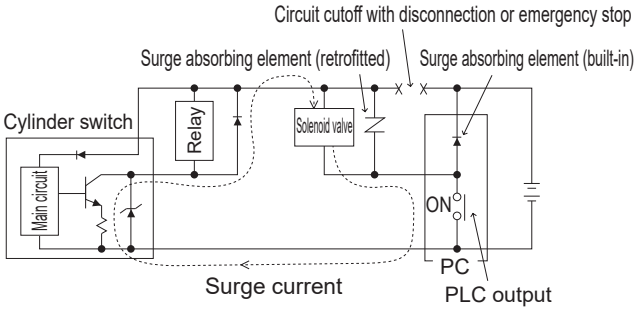

● Take the measures below to prevent damage from sneak surge current.

(1) Separate the power supply for the output system comprising the inductive load, such as the solenoid valve and relay, and the input system, such as the cylinder switch.
(2) If a separate power supply cannot be used, directly install a surge absorption element for all inductive loads. Consider that the surge absorption element connected to the PLC, etc., protects only the individual device.
(3) Connect a surge absorption element to places on the power wiring shown in the figure below, as a measure against disconnections in unspecified areas.

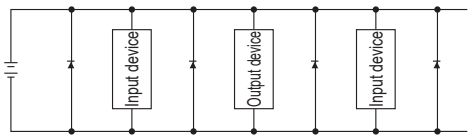

When devices are connected to a connector, the output circuit could be damaged by the above if the connector is disconnected while power is ON. Turn power OFF before connecting or disconnecting the connector.

Combined functions cylinder

Linear slide cylinder product introduction	Page
Linear slide cylinder **LCM** Series	5
Linear slide cylinder **LCR** Series	53
Linear slide cylinder **LCG** Series	135
Linear slide cylinder **LCW** Series	199
Thin linear slide cylinder **LCX** Series	249
Compact guided cylinder **STM** Series	309
Guided cylinder **STG/STG-K** Series	329
Guided cylinder **STS/STL** Series	441
Twin rod cylinder **STR2** Series	575
Unit cylinder **UCA2** Series	635

CKD Linear Slide Series

Used in applications of every kind from assembly to transport and much more

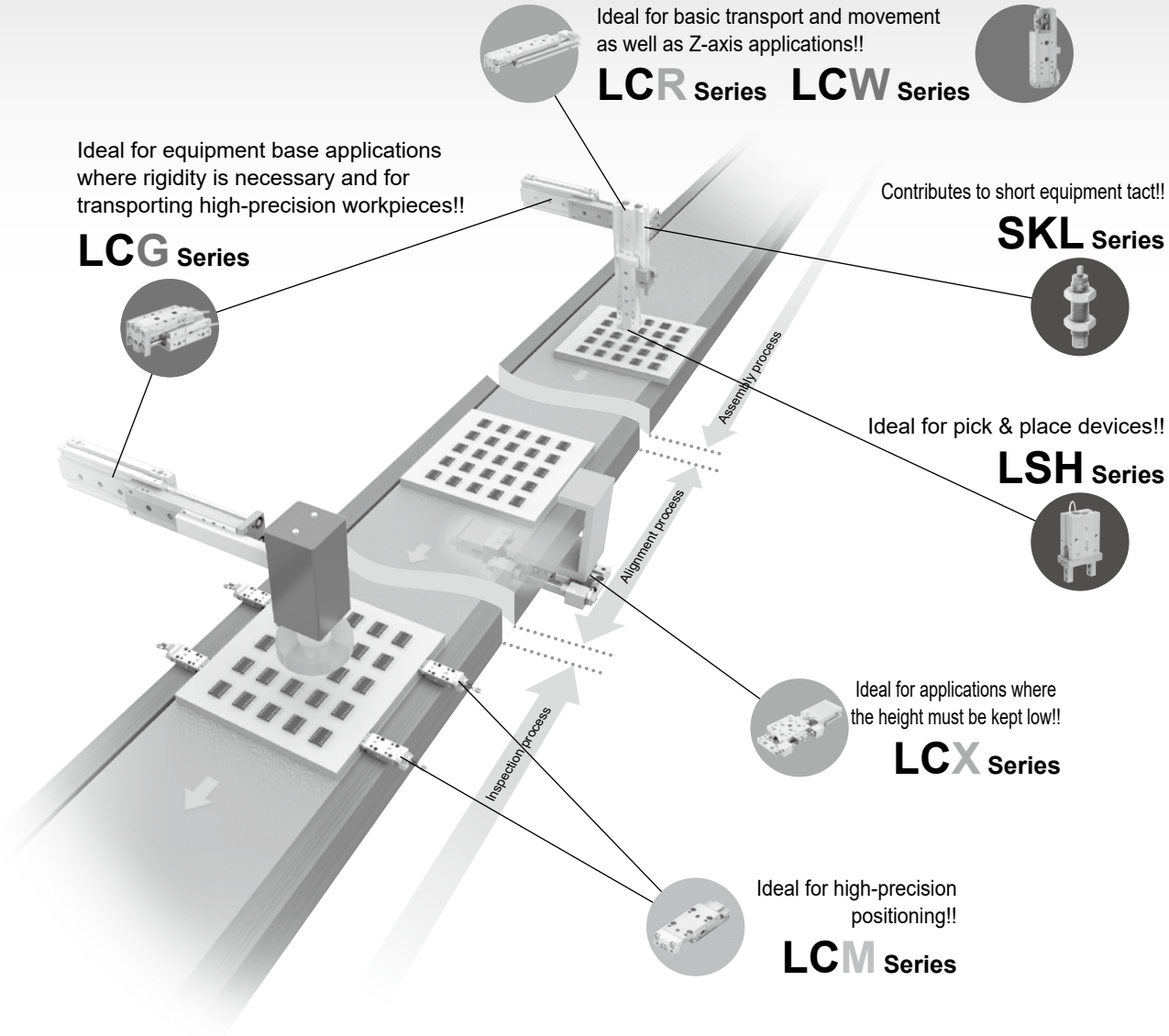

Increased flexibility in design

Increased flexibility in design is achieved, enabling symmetrical design, multi-surface piping, multi-surface mounting, mountable 2-color switch, positioning equipment and more.

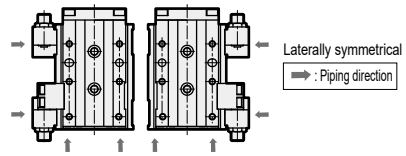

Mounting holes on two or three surfaces

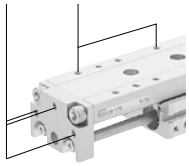

Multi-surface mounting

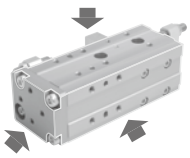

Safety mechanisms

● Buffer mechanism

If the driving section strikes against the workpiece when the cylinder is going forward, the buffer function is activated to protect the workpiece and cylinder. Perfect for pick & place devices.

● Position locking mechanism

Ensures the safety of the workpiece/cylinder during power failures or accidents.

● Stopper mechanism

New shock absorber SKL series adopted. Short tact and smooth stops are achieved.

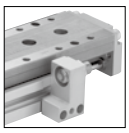

Stroke adjusting stopper

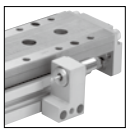

Shock absorber stopper

Environment-friendly

● Clean-room specifications

Models can be selected according to the cleanliness of the clean room. (Some models are excluded.)

● Anti-rust treatment (LCG)

The table and rail surface rustproofing reduces rust in high-humidity environments such as near ionizers.

● P4/P40 compatible

Rechargeable battery process compatible as materials are restricted. (except for some) (Option)

The enhanced lineup handles a variety of situations

Compact (compact specifications)

Compact model
that combines high precision and rigidity with a compact size.

Linear slide cylinder

LCM

Series

Variation		Bore size (ømm)			Stroke length (mm)				Option	
Single rod	Position locking	4.5	6	8	5	10	15	20	Stopper	Switch
		12	16	20	30	40	50	75		
Clean-room specifications	Fine speed	25	32		100	125	150		Buffer	P4

Standard (standard specifications)

All-round model
with flexible selection.

Linear slide cylinder

LCR

Series

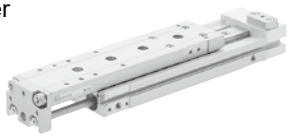

Variation		Bore size (ømm)			Stroke length (mm)				Option	
Single rod	Position locking	4.5	6	8	5	10	15	20	Stopper	Switch
		12	16	20	30	40	50	75		
Clean-room specifications	Fine speed	25	32		100	125	150		Buffer	P4

High-spec (high-precision specifications)

High-performance model
with an emphasis on high precision and high rigidity.

Linear slide cylinder

LCG

Series

Variation		Bore size (ømm)			Stroke length (mm)				Option	
Single rod	Position locking	4.5	6	8	5	10	15	20	Stopper	Switch
		12	16	20	30	40	50	75		
Clean-room specifications	Fine speed	25	32		100	125	150		Buffer	P4

Basic (simple specifications)

Easy to select model
that combines frequently used specs.

Linear slide cylinder

LCW

Series

Variation		Bore size (ømm)			Stroke length (mm)				Option	
Single rod	Position locking	4.5	6	8	5	10	15	20	Stopper	Switch
		12	16	20	30	40	50	75		
Clean-room specifications	Fine speed	25	32		100	125	150		Buffer	P4

Slim (thin/unitized specifications)

Thin model
perfect for narrow spaces.

Linear slide cylinder

LCX

Series

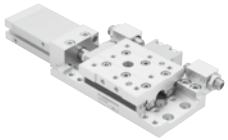

Variation		Bore size (ømm)			Stroke length (mm)				Option	
Single rod	Position locking	4.5	6	8	5	10	15	20	Stopper	Switch
		12	16	20	30	40	50	75		
Clean-room specifications	Fine speed	25	32		100	125	150		Buffer	P4

Grips the workpiece gently and precisely.

Linear Slide Hand

LSH-HP

Series

Smooth stopping of the
linear slide cylinder is achieved.

Shock absorber for linear slide cylinder

SKL

Series

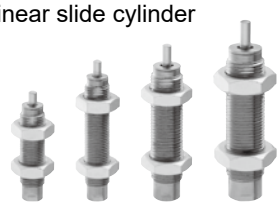

LCM

Linear slide cylinder

ø4.5/ø6/ø8

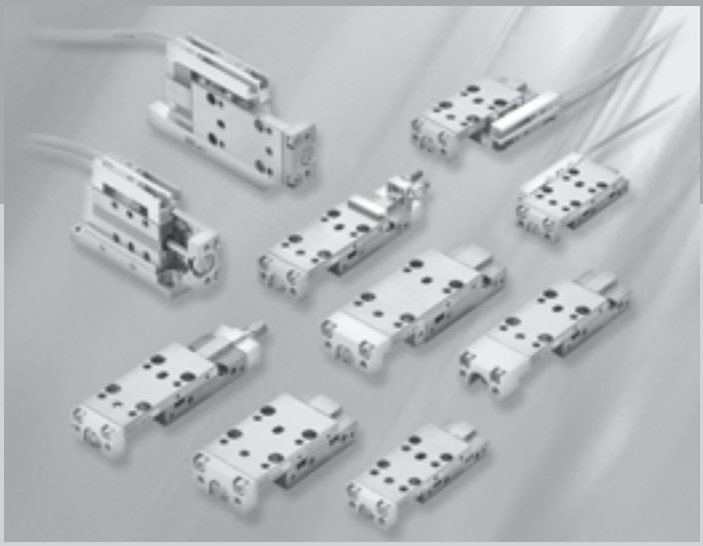

CONTENTS

Product introduction 6
Series variation 8

● Double acting/single rod (LCM) 10
● Double acting/stroke adjustable (LCM-P) (Push) 18
● Double acting/stroke adjustable (LCM-R) (Push/pull) 24
● Double acting/side mounting (LCM-A) 30
● Double acting/single rod/clean-room specifications (LCM-P73) 40

Selection guide 48
Technical data 49
⚠ Safety precautions 50

Compact/high-precision actuator.

Ultra-compact, high-precision, rigid linear slide cylinder LCM Series. (ø4.5/ø6/ø8)

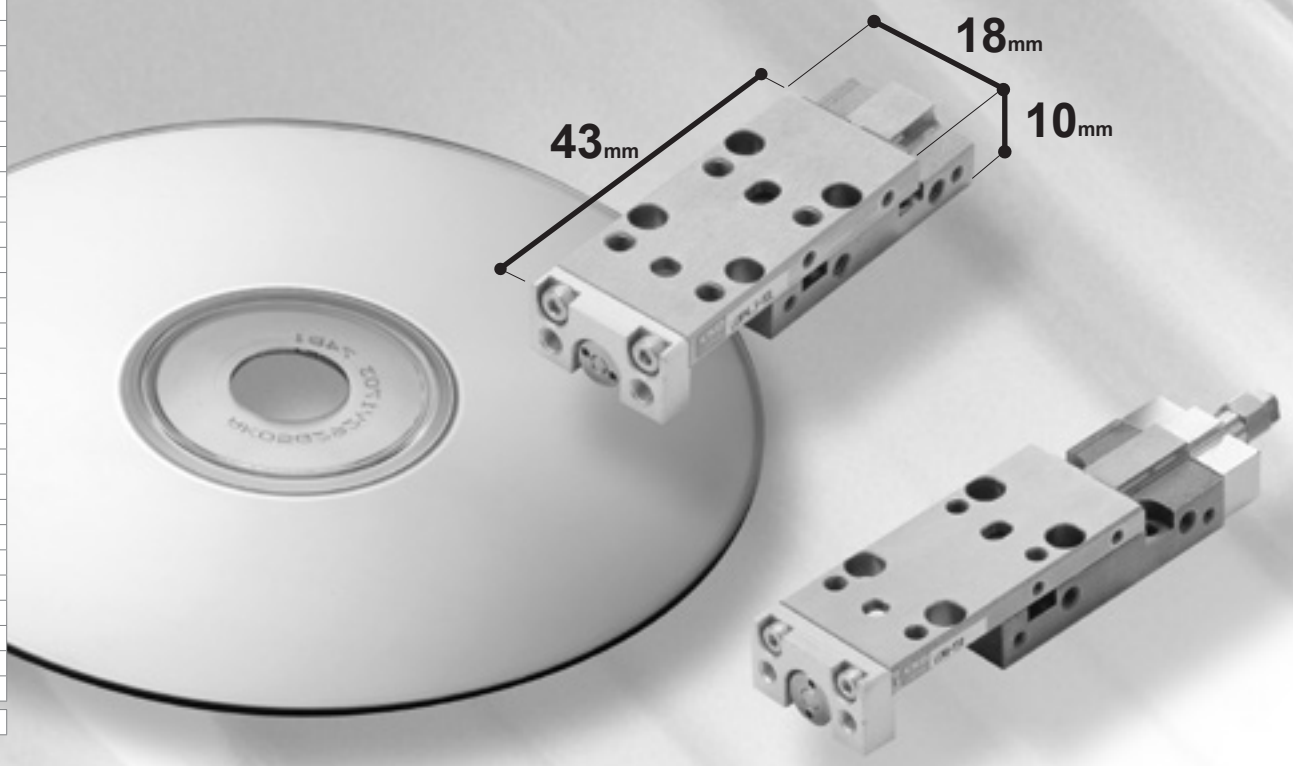

High-precision positioning

High precision 0.005 mm* parallelism during movement and 0.03 mm parallelism of installation. Ideal for positioning.

* 0.006 mm in some models. Refer to page 49 for details.

Parallelism during movement 0.005mm

0.03mm Parallelism of installation

Ultra-compact body

The cylinder body, linear guide and slide table are all integrated into an extremely small body.

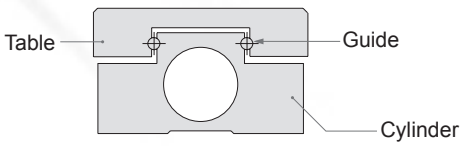

Linear Slide Cylinder **LCM Series**

Fits in a narrow, small space

The compact body can fit in a narrow, small space allowing for more flexible layout.

A workpiece can be mounted on two sides.

A workpiece can be directly mounted on the top and side with the preprocessed mounting holes.

Reliable stainless steel body

The cylinder body and slide table are corrosion-resistant stainless steel.

Resistant to load

Uses linear guide with contact at four points. Withstands load from all directions.

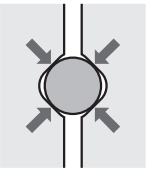

Compatible with 2-color LED switch

The 2-color LED switch newly added to the ultra-compact F-switches is available.

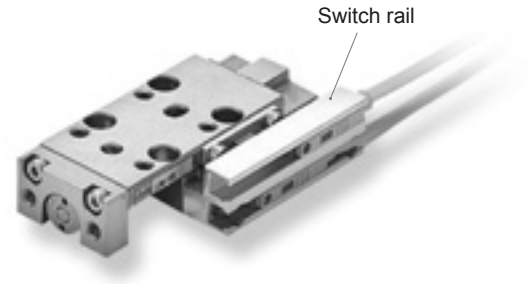

Wide range of choices

The stroke adjustable, side mounting and clean-room specifications are available.

LCM Series variation

Model variations		Bore size	Stroke (mm) 5	10	15	20	30
Double acting/single rod	LCM	ø4.5	○	○			
		ø6	○	○	○	○	○
		ø8	○	○	○	○	○
Double acting/stroke adjustable (Push)	LCM-P	ø4.5	○	○			
		ø6	○	○	○	○	○
		ø8	○	○	○	○	○
Double acting/stroke adjustable (push/pull)	LCM-R	ø4.5	○	○			
		ø6	○	○	○	○	○
		ø8	○	○	○	○	○
Double acting/side mounting	LCM-A	ø4.5	○	○			
		ø6	○	○	○	○	○
		ø8	○	○	○	○	○
Double acting/single rod clean-room specifications	LCM-P73	ø4.5	○	○			
		ø6	○	○	○	○	○
		ø8	○	○	○	○	○

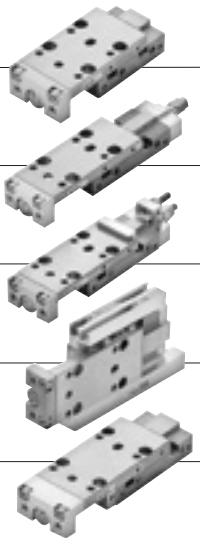

Series variation

Linear slide cylinder LCM Series

Variation	Model No. JIS symbol		Bore size (mm)	
Double acting/single rod	LCM	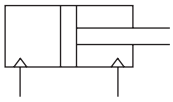	ø4.5	
			ø6	
			ø8	
Double acting/stroke adjustable (Push)	LCM-P	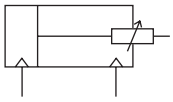	ø4.5	
			ø6	
			ø8	
Double acting/stroke adjustable (push/pull)	LCM-R	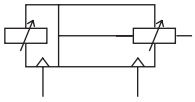	ø4.5	
			ø6	
			ø8	
Double acting/side mounting	LCM-A	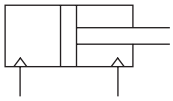	ø4.5	
			ø6	
			ø8	
Double acting/single rod clean-room specifications	LCM-P73	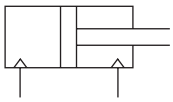	ø4.5	
			ø6	
			ø8	

LCM
LCR
LCG
LCW
LCX
STM
STG
STS/STL
STR2
UCA2
ULK*
JSK/M2
JSG
JSC3/JSC4
USSD
UFCD
USC
UB
JSB3
LMB
LML
HCM
HCA
LBC
CAC4
UCAC2
CAC-N
UCAC-N
RCS2
RCC2
PCC
SHC
MCP
GLC
MFC
BBS
RRC
GRC
RV3*
NHS
HRL
LN
Hand
Chuk
MecHnd/Chuk
ShkAbs
FJ
FK
SpdContr
Ending

●: Standard, ◎: Option, ○: Made to order, ■: Not available

Standard stroke (mm)					Option				Switch	Page
					With buffer	With magnet	With magnet + switch rail	With positioning pin		
5	10	15	20	30	B	M	F	J*		
●	●				◎	◎	◎	◎	◎	10
●	●	●	●	●						
●	●	●	●	●						
●	●				◎	◎	◎	◎	◎	18
●	●	●	●	●						
●	●	●	●	●						
●	●				◎	◎	◎	◎	◎	24
●	●	●	●	●						
●	●	●	●	●						
●	●				◎	◎	◎	◎	◎	30
●	●	●	●	●						
●	●	●	●	●						
●	●					◎	◎	◎	◎	40
●	●	●	●	●						
●	●	●	●	●						

Note : Custom stroke is not available.

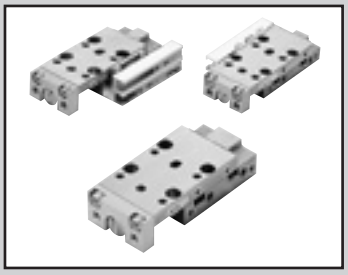

Linear slide cylinder Double acting/single rod

LCM Series

● Bore size: ø4.5, ø6, ø8

JIS symbol 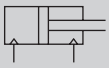

RoHS CAD

Specifications

Descriptions		LCM		
Bore size	mm	ø4.5	ø6	ø8
Actuation		Double acting		
Working fluid		Compressed air		
Max. working pressure	MPa	0.7		
Min. working pressure	MPa	0.2		0.15
Proof pressure	MPa	1.05		
Ambient temperature	°C	0 to 60		
Port size		M3		
Stroke tolerance	mm	+1.0 0		
Working piston speed	mm/s	30 to 500		
Cushion		No	With rubber cushion	
Lubrication		Not required (use turbine oil class 1 ISO VG32 if lubrication is necessary)		
Allowable absorbed energy	J	Refer to the table on page 50.		

With buffer specifications

Descriptions			LCM-*-*-*-B
Buffer stroke		mm	4 (MAX)
Buffer part spring load	When set	N	0.3
	Operating	N	0.7

Stroke

Bore size (mm)	Standard stroke (mm)	With switch, min. Stroke (mm)
ø4.5	5/10	5
ø6	5/10/15/20/30	
ø8	5/10/15/20/30	

*1: Products with stroke other than standard stroke are not available.

Switch specifications

Descriptions	Proximity 2-wire	Proximity 3-wire	Proximity 2-wire		Proximity 3-wire		
	F2S	F3S	F2H/F2V	F2YH/F2YV	F3H/F3V	F3PH/F3PV (Made to order)	F3YH/F3YV
Applications	Dedicated for programmable controller	For programmable controller, relay	Dedicated for programmable controller		For programmable controller, relay		
Output method	-	NPN output	-		NPN output	PNP output	NPN output
Power supply voltage	-	10 to 28 VDC	-		10 to 28 VDC	4.5 to 28 VDC	10 to 28 VDC
Load voltage	10 to 30 VDC	30 VDC or less	10 to 30 VDC	24 VDC ±10%	30 VDC or less		
Load current	5 to 20mA	50 mA or less	5 to 20 mA (*3)		50 mA or less		
Indicator lamp	LED (Lit when ON)		Yellow LED (Lit when ON)	Red/green LED (Lit when ON)	Yellow LED (Lit when ON)	Yellow LED (Lit when ON)	Red/green LED (Lit when ON)
Leakage current	1 mA or less	10 μA or less	1 mA or less		10 μA or less		
Weight g	1 m: 10 3 m: 29						

*1: Refer to Ending Page 1 for detailed switch specifications and dimensions.
*2: Switches other than the above models, such as switches with connectors, are also available. Refer to Ending Page 1.
*3: The max. load current is 20 mA at 25°C. The current is lower than 20 mA if the operating ambient temperature around the switch is higher than 25°C. (5 to 10 mA at 60°C)
*4: The F-switch uses a bend-resistant lead wire.

Cylinder weight

Unit: g

Stroke(mm)	5		10		15		20		30		Additional weight	
Bore size(mm)	Magnet + No switch rail	Magnet + With switch rail	Magnet + No switch rail	Magnet + With switch rail	Magnet + No switch rail	Magnet + With switch rail	Magnet + No switch rail	Magnet + With switch rail	Magnet + No switch rail	Magnet + With switch rail	With buffer	With 1 switch Additional weight per
ø4.5	42	46	42	46	-	-	-	-	-	-	3	Refer to the weight in the switch specifications.
ø6	58	63	58	63	66	72	74	80	90	97	4	
ø8	83	88	83	88	104	110	104	110	125	132	5	

Theoretical thrust table

Unit: N

Bore size(mm)	Operating direction	Working pressure MPa					
		0.2	0.3	0.4	0.5	0.6	0.7
ø4.5	Push	3.2	4.8	6.4	8.0	9.5	11.1
	Pull	2.6	3.8	5.1	6.4	7.7	8.9
ø6	Push	5.7	8.5	11.3	14.1	17.0	19.8
	Pull	4.2	6.4	8.5	10.6	12.7	14.8
ø8	Push	10.1	15.1	20.1	25.1	30.2	35.2
	Pull	8.6	13.0	17.3	21.6	25.9	30.2

How to order

● Without switch (without magnet for switch)

LCM - 6 - 10 - R ——— J2

● With switch (built-in magnet for switch)

LCM - 6 - 10 - R - F2H - R - J2

Ⓐ Bore size
Ⓑ Stroke
Ⓒ Piping direction
Ⓓ Switch model No.
Ⓔ Switch quantity
Ⓕ Option

Code	Description
Ⓐ Bore size (mm)	
4.5	ø4.5
6	ø6
8	ø8

Ⓑ Stroke (mm)

		Bore size		
		ø4.5	ø6	ø8
5	5	●	●	●
10	10	●	●	●
15	15	-	●	●
20	20	-	●	●
30	30	-	●	●

Ⓒ Piping direction	
R	Right from rod side
L	Left from rod side

Ⓓ Switch model No.

Straight lead wire	L-shaped lead wire	Contact	Voltage AC	Voltage DC	Indicator	Lead wire
-	**F2S***	Proximity		●	1-color LED	2-wire
F2H*	**F2V***			●		
-	**F3S***			●		3-wire
F3H*	**F3V***			●		
F3PH*	**F3PV***			●	1-color LED (PNP output) (made to order)	3-wire
F2YH*	**F2YV***			●	2-color LED	2-wire
F3YH*	**F3YV***			●		3-wire

*** Lead wire length**	
Blank	1 m (standard)
3	3 m (option)

Ⓔ Switch quantity	
R	1 on rod side
H	1 on head side
D	2

Ⓕ Option	
B	With buffer
M *1	With magnet
F1 *1, 2	With magnet + switch rail (one switch groove)
F2 *1	With magnet + switch rail (two switch grooves)
J*	With positioning pin (*···· number of pins)

⚠ Precautions for model No. selection

*1: Can be omitted if the switch model No. is specified.
*2: Available only for ø4.5.

[Example of model No.]

LCM-6-10-R-F2H-R-J2

Model No.: Linear slide cylinder, double acting

Ⓐ Bore size : ø6 mm
Ⓑ Stroke : 10 mm
Ⓒ Piping direction : Right when viewed from rod side
Ⓓ Switch model No. : Proximity switch F2H, lead wire 1 m
Ⓔ Switch quantity : 1 on rod side
Ⓕ Option : With positioning pin (2)

How to order switch

● Switch body + switch rail + magnet

LCM - F2H - R - 6 - 10

Ⓓ Switch model No.
Ⓔ Switch quantity
Ⓐ Bore size
Ⓑ Stroke

● Switch body only

SW - F2H

Ⓓ Switch model No.

● Magnet only

LCM - M - 6

Magnet
Ⓐ Bore size

● Switch rail only

·ø4.5

LCM - F1 / F2 - 4.5

Switch rail

·ø6, ø8

LCM - F2 - 6 - 10

Switch rail
Ⓐ Bore size
Ⓑ Stroke

How to order discrete positioning pin

LCM - J* - 4.5

Positioning pin
Number of pins

LCM
LCR
LCG
LCW
LCX
STM
STG
STS/STL
STR2
UCA2
ULK*
JSK/M2
JSG
JSC3/JSC4
USSD
UFCD
USC
UB
JSB3
LMB
LML
HCM
HCA
LBC
CAC4
UCAC2
CAC-N
UCAC-N
RCS2
RCC2
PCC
SHC
MCP
GLC
MFC
BBS
RRC
GRC
RV3*
NHS
HRL
LN
Hand
Chuk
MecHnd/Chuk
ShkAbs
FJ
FK
SpdContr
Ending

Internal structure and parts list

● LCM-4.5

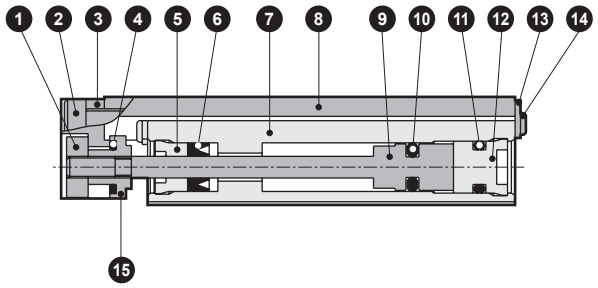

● LCM-6.8

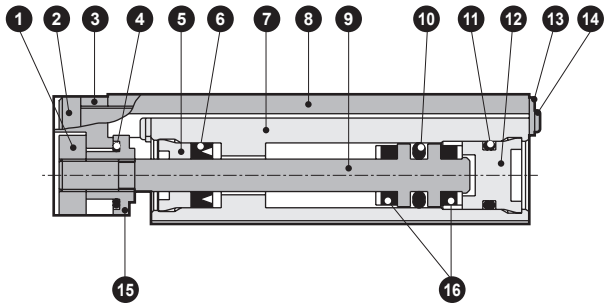

● LCM-4.5 to 8 With magnet/switch rail

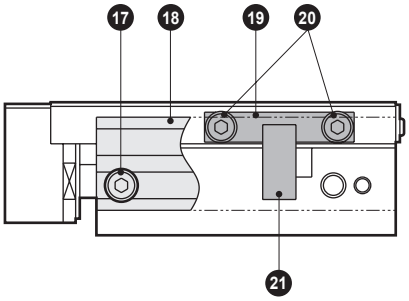

·Positioning pin

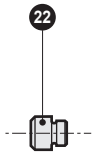

Cannot be disassembled

Parts list

No.	Part name	Material	Remarks	No.	Part name	Material	Remarks
1	Floating bush A	Stainless steel		12	Cover	Acetal resin	
2	Hexagon socket head cap screw	Stainless steel		13	Stop plate	Stainless steel	
3	End plate	Aluminum alloy		14	Small machine screw	Stainless steel	
4	O-ring	Nitrile rubber		15	Floating bush B	Stainless steel	
5	Rod cover	Acetal resin		16	Cushion rubber	Urethane rubber (ø6, ø8)	
6	Rod packing	Nitrile rubber		17	Hexagon socket head cap screw	Stainless steel	
7	Cylinder body	Stainless steel		18	Switch rail	Aluminum alloy	
8	Slide table	Stainless steel		19	Plate	Aluminum alloy	
9	Piston	Stainless steel		20	Hexagon socket head cap screw	Stainless steel	
10	Piston packing	Nitrile rubber		21	Magnet	Plastic	
11	O-ring	Nitrile rubber		22	Positioning pin	Steel	

Internal structure and parts list

● LCM-4.5 to 8 With buffer

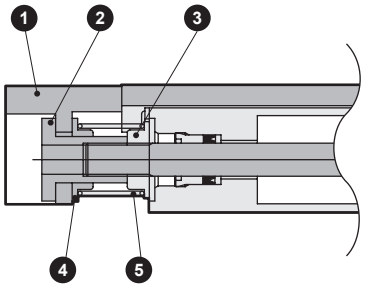

Parts list

No.	Part name	Material	Remarks
1	End plate	Aluminum alloy	
2	Floating bush A	Stainless steel	
3	Floating bush B	Stainless steel	
4	Spring holder	Copper alloy	
5	Coil spring	Stainless steel	

LCM
LCR
LCG
LCW
LCX
STM
STG
STS/STL
STR2
UCA2
ULK*
JSK/M2
JSG
JSC3/JSC4
USSD
UFCD
USC
UB
JSB3
LMB
LML
HCM
HCA
LBC
CAC4
UCAC2
CAC-N
UCAC-N
RCS2
RCC2
PCC
SHC
MCP
GLC
MFC
BBS
RRC
GRC
RV3*
NHS
HRL
LN
Hand
Chuk
MecHnd/Chuk
ShkAbs
FJ
FK
SpdContr
Ending

Dimensions (bore size: ø4.5)

CAD

● LCM-4.5

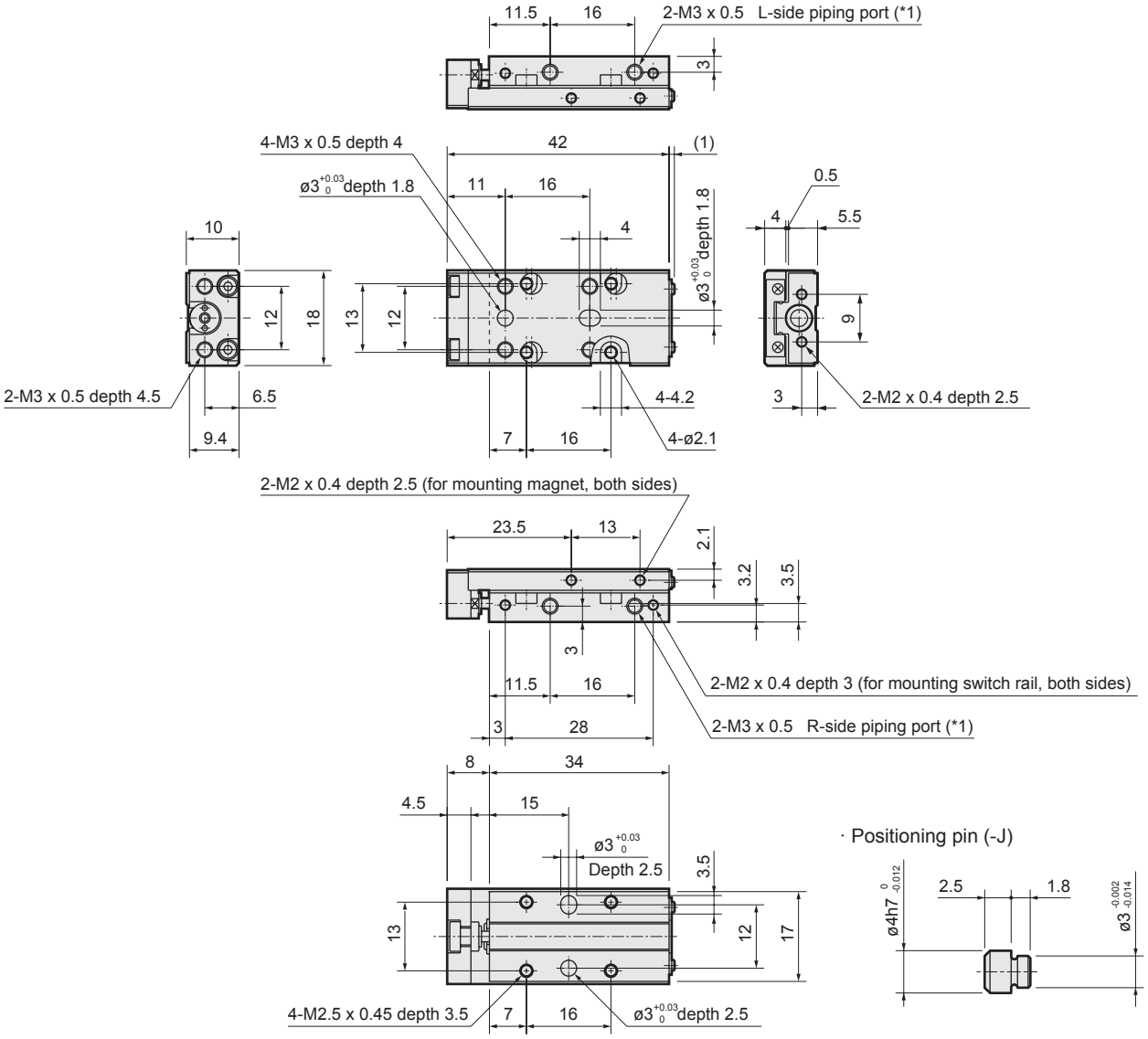

(*1) Plug is attached to the opposite side to the piping port specified with the model No.

· With magnet/cylinder switch (piping direction: -R)

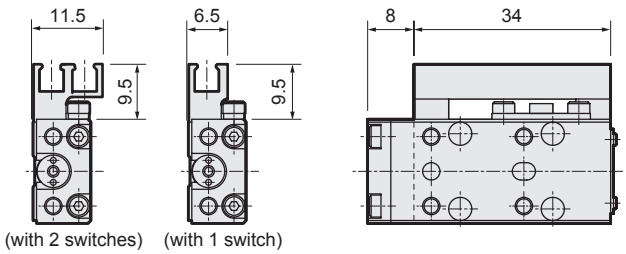

· With magnet/cylinder switch (piping direction: -L)

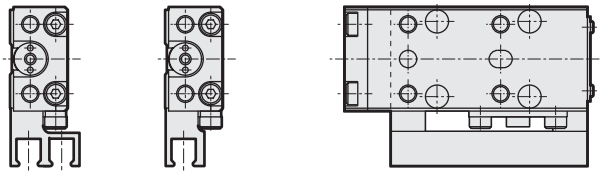

· With buffer (-B)

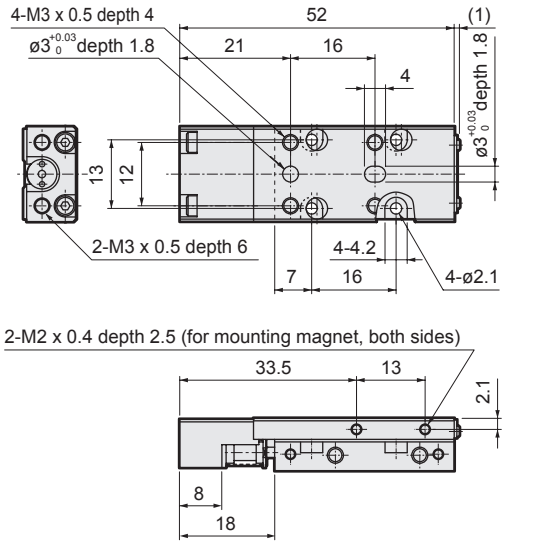

Note: Refer to page 47 for switch mounting position dimensions.

Dimensions (bore size: ø6) CAD

● LCM-6

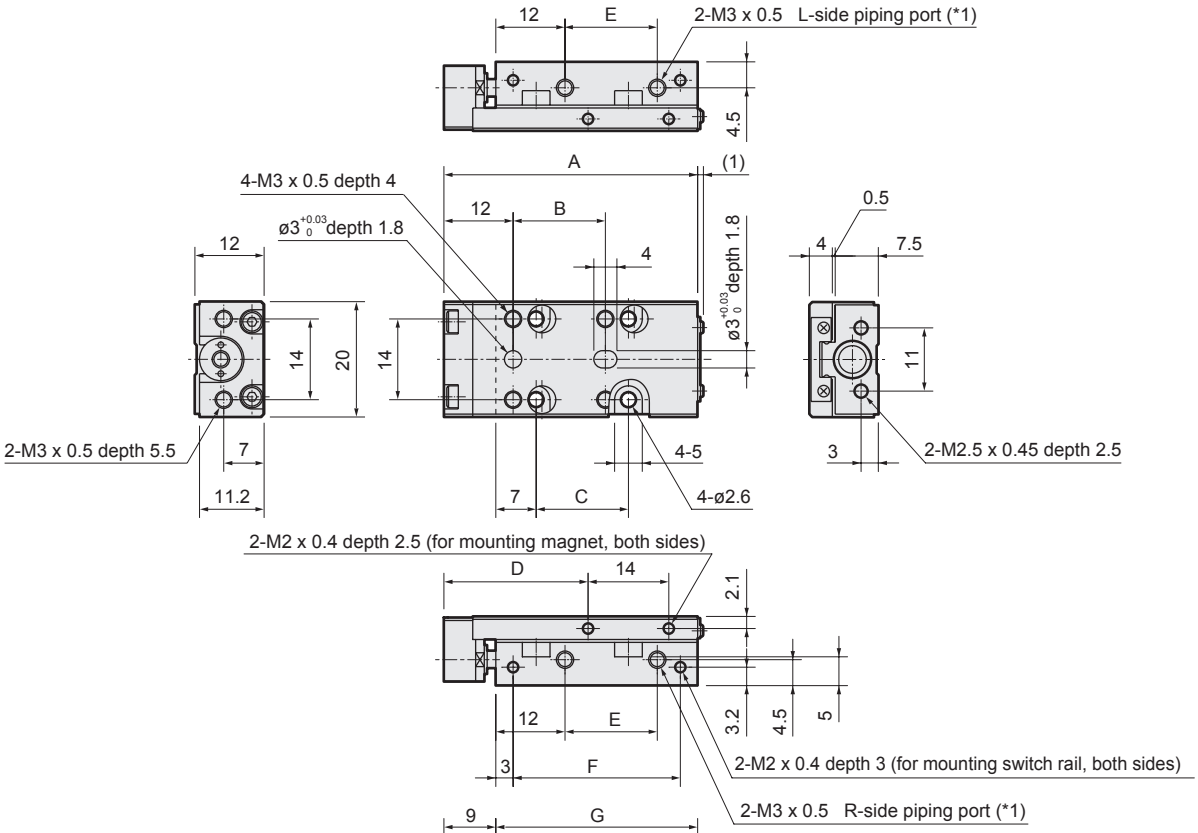

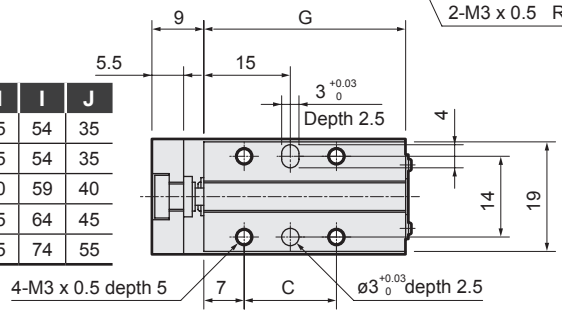

Stroke	A	B	C	D	E	F	G	H	I	J
5	44	16	16	25	16	29	35	35	54	35
10	44	16	16	25	16	29	35	35	54	35
15	49	21	21	30	21	34	40	40	59	40
20	54	26	26	35	26	39	45	45	64	45
30	64	36	36	45	36	49	55	55	74	55

· Positioning pin (-J)

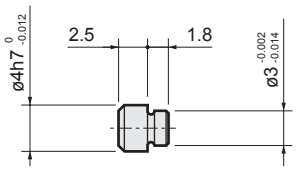

(*1) Plug is attached to the opposite side to the piping port specified with the model No.

· With magnet/cylinder switch (piping direction: -R)

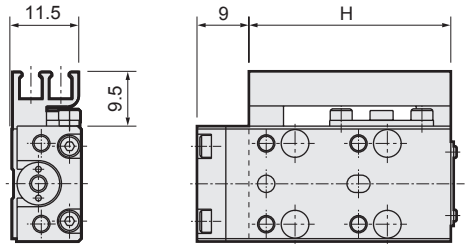

· With magnet/cylinder switch (piping direction: -L)

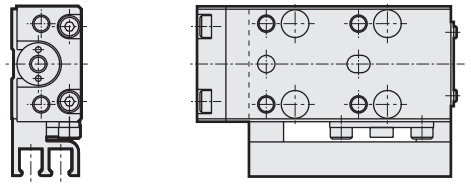

Note: Refer to page 47 for switch mounting position dimensions.

· With buffer (-B)

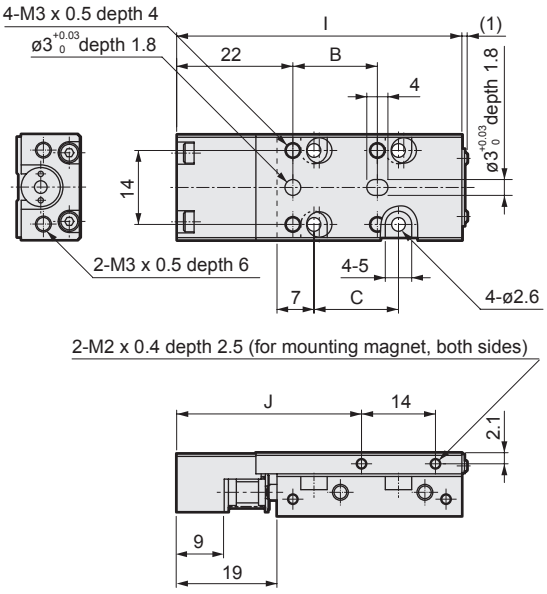

LCM
LCR
LCG
LCW
LCX
STM
STG
STS/STL
STR2
UCA2
ULK*
JSK/M2
JSG
JSC3/JSC4
USSD
UFCD
USC
UB
JSB3
LMB
LML
HCM
HCA
LBC
CAC4
UCAC2
CAC-N
UCAC-N
RCS2
RCC2
PCC
SHC
MCP
GLC
MFC
BBS
RRC
GRC
RV3*
NHS
HRL
LN
Hand
Chuk
MecHnd/Chuk
ShkAbs
FJ
FK
SpdContr
Ending

Dimensions (bore size: ø8)

CAD

● LCM-8

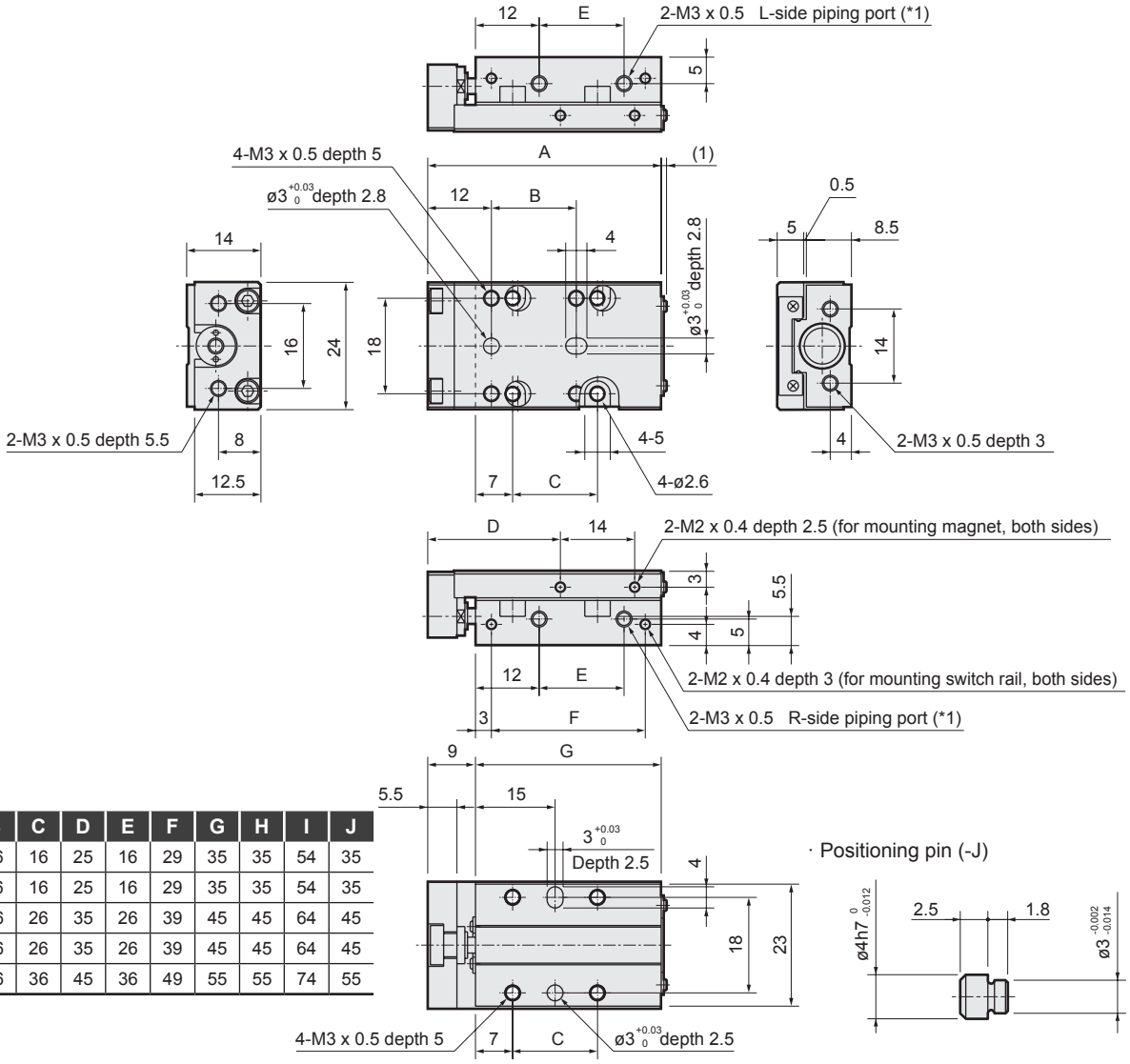

Stroke	A	B	C	D	E	F	G	H	I	J
5	44	16	16	25	16	29	35	35	54	35
10	44	16	16	25	16	29	35	35	54	35
15	54	26	26	35	26	39	45	45	64	45
20	54	26	26	35	26	39	45	45	64	45
30	64	36	36	45	36	49	55	55	74	55

· Positioning pin (-J)

(*1) Plug is attached to the opposite side to the piping port specified with the model No.

· With magnet/cylinder switch (piping direction: -R)

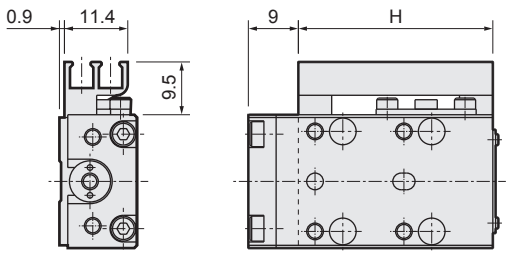

· With magnet/cylinder switch (piping direction: -L)

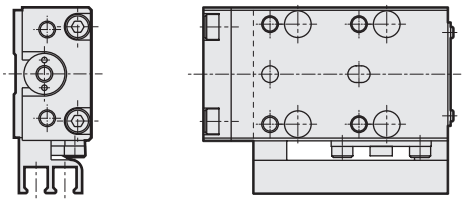

· With buffer (-B)

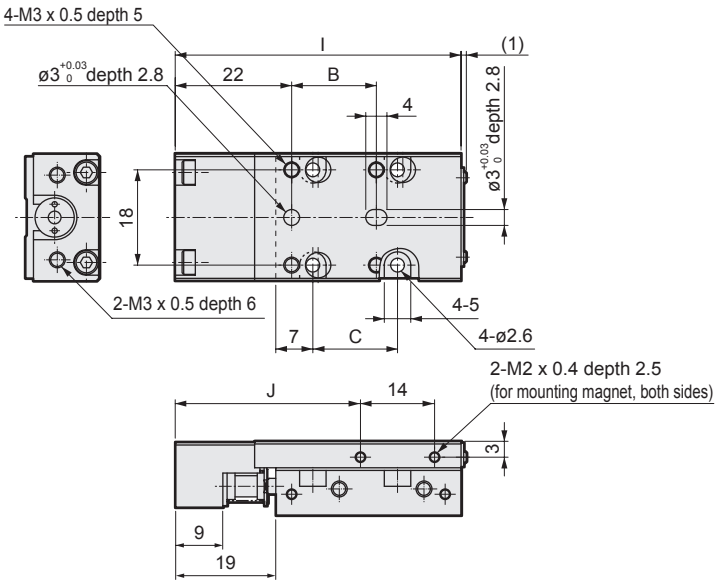

Note: Refer to page 47 for switch mounting position dimensions.

MEMO

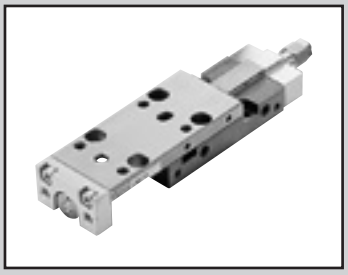

Linear slide cylinder Double acting/stroke adjustable (push)

LCM-P Series

● Bore size: ø4.5, ø6, ø8

JIS symbol

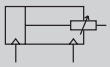

RoHS CAD

Specifications

Descriptions		LCM-P		
Bore size	mm	ø4.5	ø6	ø8
Actuation		Double acting		
Working fluid		Compressed air		
Max. working pressure	MPa	0.7		
Min. working pressure	MPa	0.25	0.2	0.15
Proof pressure	MPa	1.05		
Ambient temperature	°C	0 to 60		
Port size		M3		
Stroke tolerance	mm	+1.0 0		
Working piston speed	mm/s	30 to 500		
Cushion		No		
Lubrication		Not required (use turbine oil class 1 ISO VG32 if lubrication is necessary))		
Adjustable stroke range	mm	-5 to 0		
Repeatability	mm	±0.02		
Allowable absorbed energy	J	Refer to the table on page 50.		

With buffer specifications

Descriptions			LCM-*-*-*-B
Buffer stroke		mm	4(MAX)
Buffer part spring load	When set	N	0.3
	Operating	N	0.7

Stroke

Bore size (mm)	Standard stroke (mm)	Min. stroke with switch (mm)
ø4.5	5, 10	5
ø6	5, 10, 15, 20, 30	
ø8	5, 10, 15, 20, 30	

*1: Products with stroke other than standard stroke are not available.

Switch specifications

Descriptions	Proximity 2-wire	Proximity 3-wire	Proximity 2-wire		Proximity 3-wire		
	F2S	F3S	F2H/F2V	F2YH/F2YV	F3H/F3V	F3PH/F3PV (Made to order)	F3YH/F3YV
Applications	Programmable Controller dedicated	Programmable For controller, relay	Programmable Controller dedicated		For programmable controller, relay		
Output method	-	NPN output	-		NPN output	PNP output	NPN output
Power supply voltage	-	10 to 28 VDC	-		10 to 28 VDC	4.5 to 28 VDC	10 to 28 VDC
Load voltage	10 to 30 VDC	30 VDC or less	10 to 30 VDC	24 VDC ±10%	30 VDC or less		
Load current	5 to 20mA	50 mA or less	5 to 20mA (*3)		50 mA or less		
Indicator lamp	LED (Lit when ON)		Yellow LED (Lit when ON)	Red/green LED (Lit when ON)	Yellow LED (Lit when ON)	Yellow LED (Lit when ON)	Red/green LED (Lit when ON)
Leakage current	1 mA or less	10 μA or less	1 mA or less		10 μA or less		
Weight g	1 m: 10 3 m: 29						

*1 : Refer to Ending Page 1 for detailed switch specifications and dimensions.
*2 : Switches other than the above models, such as switches with connectors, are also available. Refer to Ending Page 1.
*3 : The max. load current is 20 mA at 25°C. The current is lower than 20 mA if the operating ambient temperature around the switch is higher than 25˚C. (5 to 10 mA at 60°C)
*4 : The F-switch uses a bend-resistant lead wire.

Cylinder weight

Unit: g

Stroke(mm)	5		10		15		20		30		Additional weight	
Bore size(mm)	No magnet/ switch rail	With magnet + switch rail	No magnet/ switch rail	With magnet + switch rail	No magnet/ switch rail	With magnet + switch rail	No magnet/ switch rail	With magnet + switch rail	No magnet/ switch rail	With magnet + switch rail	With buffer	Weight per switch
ø4.5	49	53	49	53	-	-	-	-	-	-	3	Refer to the weight in the switch specifications.
ø6	68	73	68	73	77	83	86	92	104	111	4	
ø8	97	102	97	102	120	126	120	126	143	150	5	

Theoretical thrust table

Unit: N

Bore size(mm)	Working pressure MPa					
	0.2	0.3	0.4	0.5	0.6	0.7
ø4.5	-	3.8	5.1	6.4	7.7	8.9
ø6	4.2	6.4	8.5	10.6	12.7	14.8
ø8	8.6	13.0	17.3	21.6	25.9	30.2

How to order

● Without switch (without magnet for switch)

LCM-P - 6 - 10 - R ——— J2

● With switch (built-in magnet for switch)

LCM-P - 6 - 10 - R - F2H - R - J2

Ⓐ Bore size
Ⓑ Stroke
Ⓒ Piping direction
Ⓓ Switch model No.
Ⓔ Switch quantity
Ⓕ Option

Code	Description
Ⓐ Bore size (mm)	
4.5	ø4.5
6	ø6
8	ø8

Ⓑ Stroke (mm)

		Bore size		
		ø4.5	ø6	ø8
5	5	●	●	●
10	10	●	●	●
15	15	-	●	●
20	20	-	●	●
30	30	-	●	●

Ⓒ Piping direction	
R	Right from rod side
L	Left from rod side

Ⓓ Switch model No.

Straight lead wire	L-shaped lead wire	Contact	Voltage AC	Voltage DC	Indicator	Lead wire
-	**F2S***	Proximity		●	1-color LED	2-wire
F2H*	**F2V***			●		
-	**F3S***			●		3-wire
F3H*	**F3V***			●		
F3PH*	**F3PV***			●	1 color display (PNP output) (made to order)	3-wire
F2YH*	**F2YV***			●	2-color LED	2-wire
F3YH*	**F3YV***			●		3-wire

*** Lead wire length**	
Blank	1 m (standard)
3	3 m (option)

Ⓔ Switch quantity	
R	1 on rod side
H	1 on head side
D	2

Ⓕ Option	
B	With buffer
M *1	With magnet
F1 *1, 2	With magnet + switch rail (one switch groove)
F2 *1	With magnet + switch rail (two switch grooves)
J*	With positioning pin (*···· number of pins)

⚠ Precautions for model No. selection

*1: Can be omitted if the switch model No. is specified.
*2: Available only for ø4.5.

[Example of model No.]

LCM-P-6-10-R-F2H-R-J2

Model No. : Linear slide cylinder, double acting/stroke adjustable (push)

Ⓐ Bore size : ø6 mm
Ⓑ Stroke : 10 mm
Ⓒ Piping direction : Right when viewed from rod side
Ⓓ Switch model No. : Proximity switch F2H, lead wire 1 m
Ⓔ Switch quantity : 1 on rod side
Ⓕ Option : With positioning pin (2)

How to order switch

● Switch body + switch rail + magnet

LCM - F2H - R - 6 - 10

Ⓓ Switch model No.
Ⓔ Switch quantity
Ⓐ Bore size
Ⓑ Stroke

● Switch body only

SW - F2H

Ⓓ Switch model No.

● Magnet only

LCM - M - 6

Magnet
Ⓐ Bore size

● Switch rail only

·ø4.5

LCM - F1/F2 - 4.5

Switch rail

·ø6, ø8

LCM - F2 - 6 - 10

Switch rail
Ⓐ Bore size
Ⓑ Stroke

How to order discrete positioning pin

LCM - J* - 4.5

Positioning pin
Number of pins

Internal structure and parts list

● LCM-P-4.5

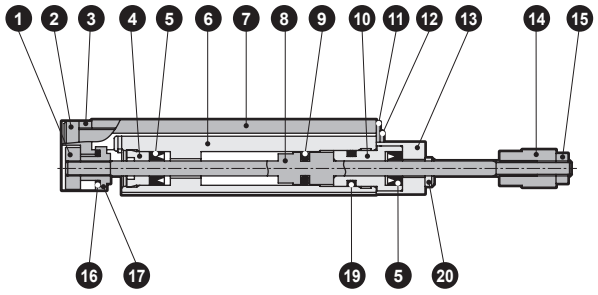

● LCM-P-6,8

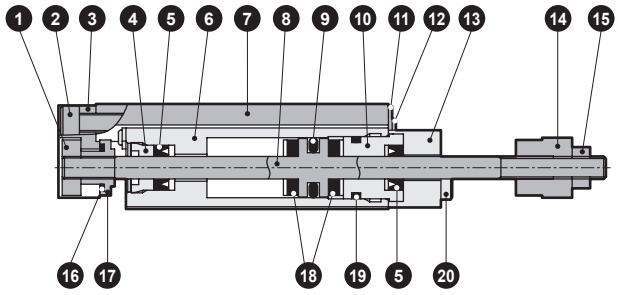

● LCM-P-4.5 to 8 With magnet/switch rail

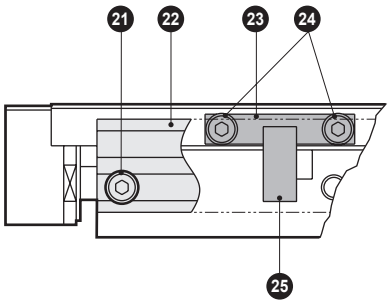

· Positioning pin (-J)

Cannot be disassembled

Parts list

No.	Part name	Material	Remarks
1	Floating bush A	Stainless steel	
2	Hexagon socket head cap screw	Stainless steel	
3	End plate	Aluminum alloy	
4	Rod cover	Acetal resin	
5	Rod packing	Nitrile rubber	
6	Cylinder body	Stainless steel	
7	Slide table	Stainless steel	
8	Piston	Stainless steel	
9	Piston packing	Nitrile rubber	
10	Cover	Aluminum alloy	
11	Stop plate	Stainless steel	
12	Small machine screw	Stainless steel	
13	Stopper A	Steel	Nickel plating

No.	Part name	Material		Remarks
14	Adjustable stopper	Steel		Nickel plating
15	Hexagon nut	ø4.5	Stainless steel	
		ø6,ø8	Steel	Nickel plating
16	O-ring	Nitrile rubber		
17	Floating bush B	Stainless steel		
18	Cushion rubber	Urethane rubber (ø6, ø8)		
19	O-ring	Nitrile rubber		
20	Hexagon socket head cap screw	Stainless steel		
21	Hexagon socket head cap screw	Stainless steel		
22	Switch rail	Aluminum alloy		
23	Plate	Aluminum alloy		
24	Hexagon socket head cap screw	Stainless steel		
25	Magnet	Plastic		
26	Positioning pin	Steel		

Dimensions (bore size: ø4.5)

● LCM-P-4.5

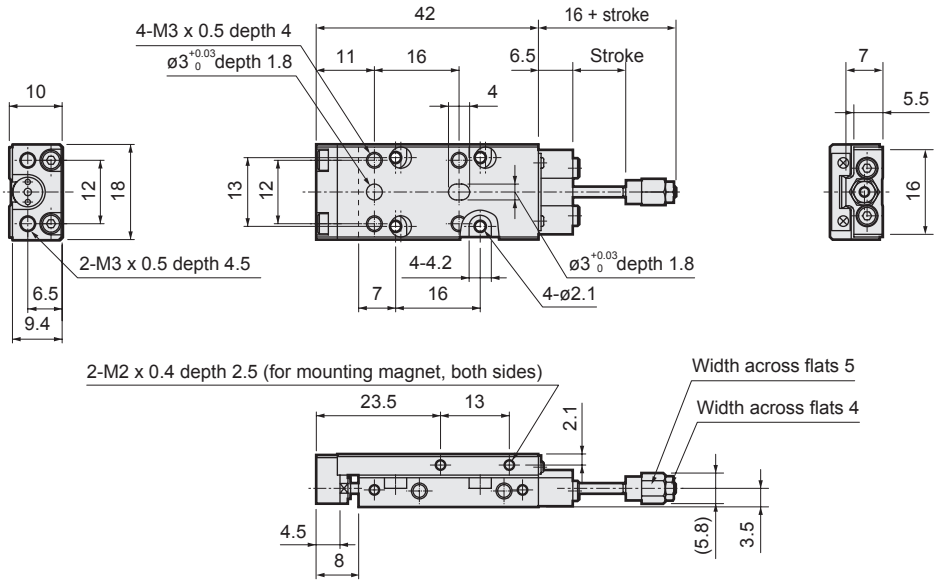

· With magnet/cylinder switch (piping direction: -R)

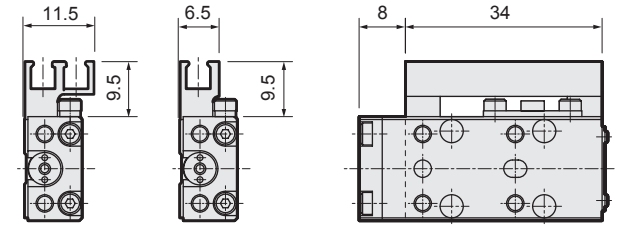

(with 2 switches) (with 1 switch)

· With magnet/cylinder switch (piping direction: -L)

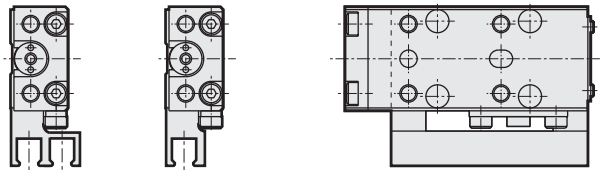

· With buffer (-B)

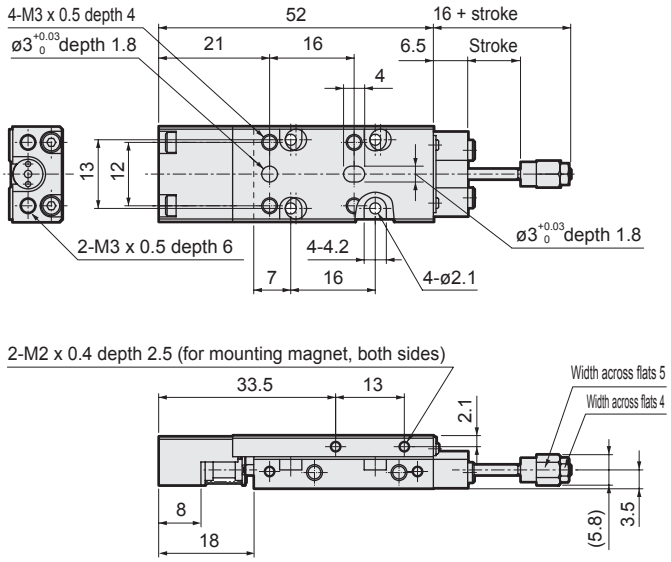

Note : Refer to page 47 for switch mounting position dimensions.

Dimensions other than those listed above are the same as those of double acting/single rod.
Refer to page 14.

LCM
LCR
LCG
LCW
LCX
STM
STG
STS/STL
STR2
UCA2
ULK*
JSK/M2
JSG
JSC3/JSC4
USSD
UFCD
USC
UB
JSB3
LMB
LML
HCM
HCA
LBC
CAC4
UCAC2
CAC-N
UCAC-N
RCS2
RCC2
PCC
SHC
MCP
GLC
MFC
BBS
RRC
GRC
RV3*
NHS
HRL
LN
Hand
Chuk
MecHnd/Chuk
ShkAbs
FJ
FK
SpdContr
Ending

Dimensions (bore size: ø6) CAD

● LCM-P-6

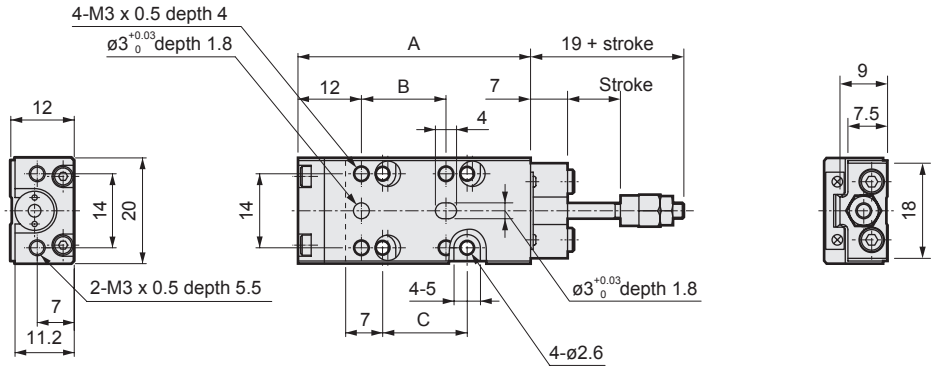

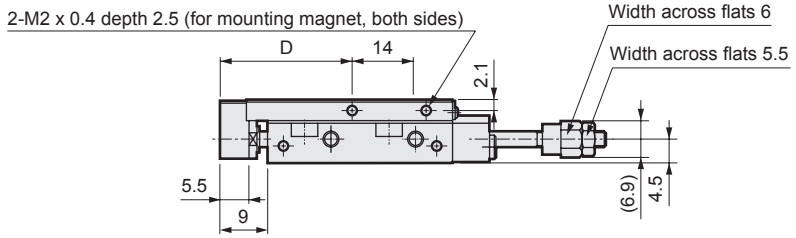

Stroke	A	B	C	D	H	I	J
5	44	16	16	25	35	54	35
10	44	16	16	25	35	54	35
15	49	21	21	30	40	59	40
20	54	26	26	35	45	64	45
30	64	36	36	45	55	74	55

· With magnet/cylinder switch (piping direction: -R)

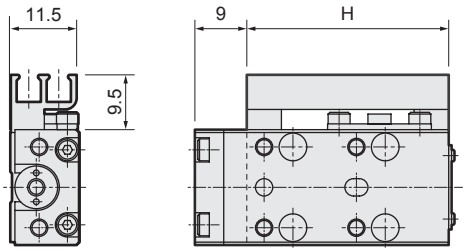

· With buffer (-B)

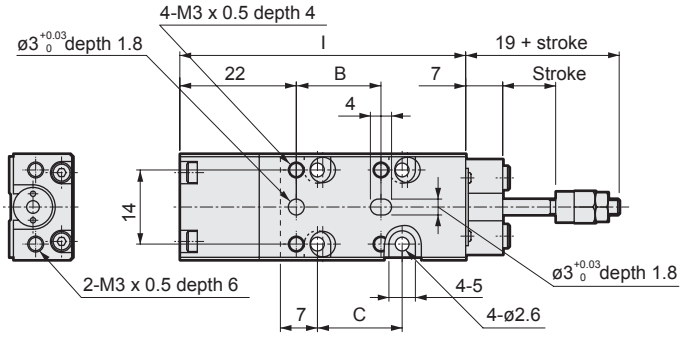

· With magnet/cylinder switch (piping direction: -L)

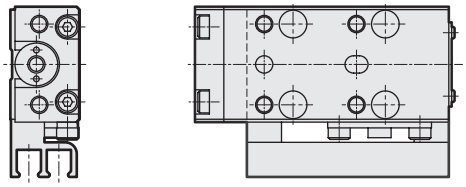

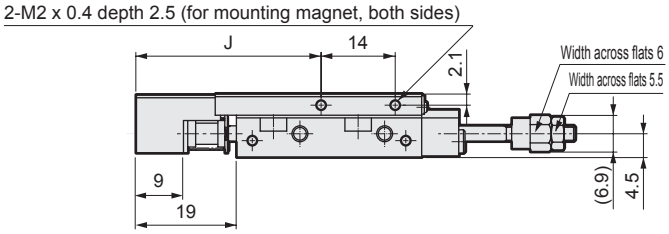

Note : Refer to page 47 for switch mounting position dimensions.

Dimensions other than those listed above are the same as those of double acting/single rod.
Refer to page 15.

Dimensions (bore size: ø8)

● LCM-P-8

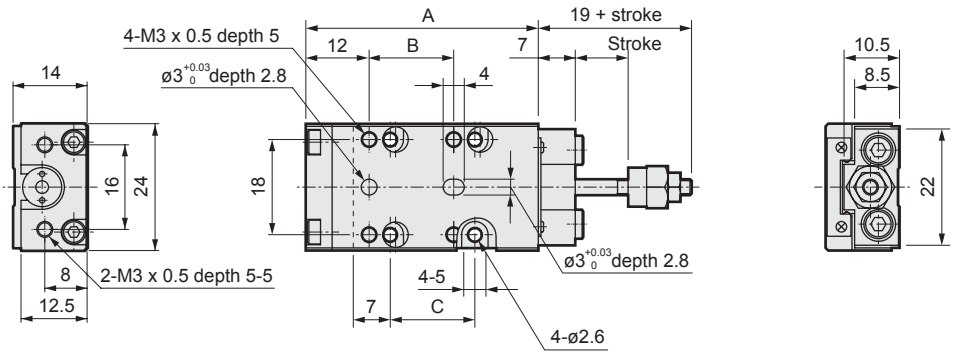

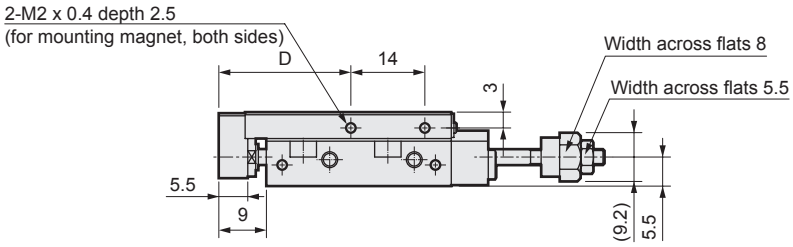

Stroke	A	B	C	D	H	I	J
5	44	16	16	25	35	54	35
10	44	16	16	25	35	54	35
15	54	26	26	35	45	64	45
20	54	26	26	35	45	64	45
30	64	36	36	45	55	74	55

· With magnet/cylinder switch (piping direction: -R)

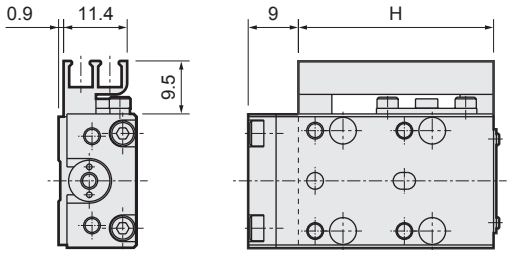

· With magnet/cylinder switch (piping direction: -L)

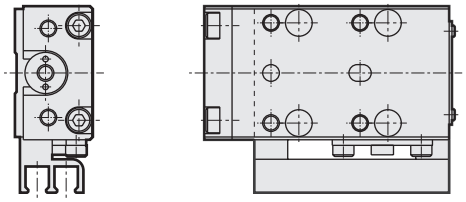

· With buffer (-B)

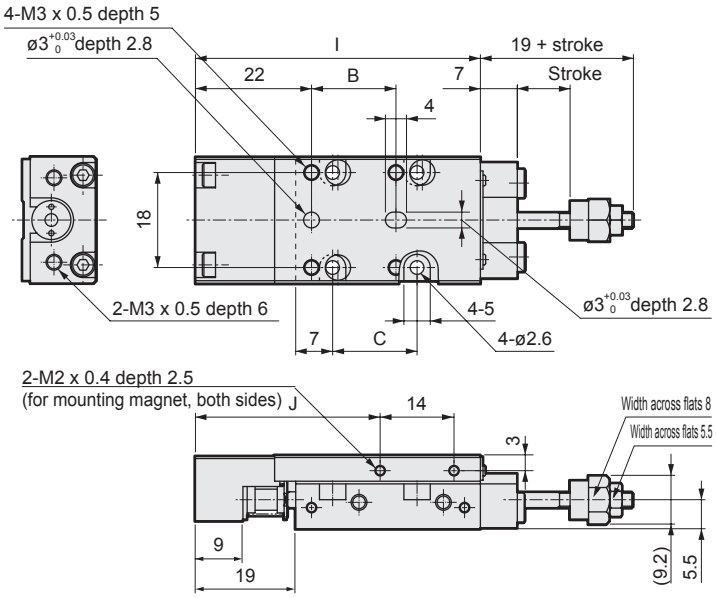

Note : Refer to page 47 for switch mounting position dimensions.

Dimensions other than those listed above are the same as those of double acting/single rod.
Refer to page 16.

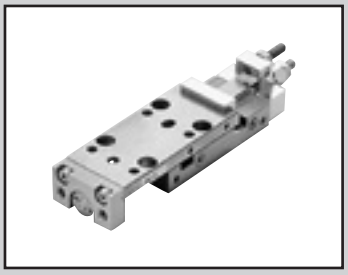

Linear slide cylinder double acting/stroke adjustable (push/pull)

LCM-R Series

● Bore size: ø4.5, ø6, ø8

JIS symbol 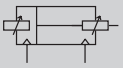

RoHS CAD

Specifications

Descriptions			LCM-R		
Bore size		mm	ø4.5	ø6	ø8
Actuation			Double acting		
Working fluid			Compressed air		
Max. working pressure		MPa	0.7		
Min. working pressure		MPa	0.25	0.2	0.15
Proof pressure		MPa	1.05		
Ambient temperature		°C	0 to 60		
Port size			M3		
Stroke tolerance		mm	+1.0 0		
Working piston speed		mm/s	30 to 500		
Cushion	Push		No		
	Pull		No		
Lubrication			Not required (use turbine oil class 1 ISO VG32 if lubrication is necessary))		
Adjustable stroke range	Push	mm	-5 to 0		
	Pull	mm	-7 to 0		
Repeatability		mm	±0.02		
Allowable absorbed energy		J	Refer to the table on page 50.		

With buffer specifications

Descriptions			LCM-*-*-*-B
Buffer stroke		mm	4(MAX)
Buffer part spring load	When set	N	0.3
	Operating	N	0.7

Stroke

Bore size (mm)	Standard stroke (mm)	Min. stroke with switch (mm)
ø4.5	5/10	5
ø6	5/10/15/20/30	
ø8	5/10/15/20/30	

*1: Products with stroke other than standard stroke are not available.

Switch specifications

Descriptions	Proximity 2-wire	Proximity 3-wire	Proximity 2-wire		Proximity 3-wire		
	F2S	F3S	F2H/F2V	F2YH/F2YV	F3H/F3V	F3PH/F3PV (Made to order)	F3YH/F3YV
Applications	Dedicated for programmable controller	Programmable For controller, relay	Programmable Controller dedicated		For programmable controller, relay		
Output method	-	NPN output	-		NPN output	PNP output	NPN output
Power supply voltage	-	10 to 28 VDC	-		10 to 28 VDC	4.5 to 28 VDC	10 to 28 VDC
Load voltage	10 to 30 VDC	30 VDC or less	10 to 30 VDC	24 VDC ±10%	30 VDC or less		
Load current	5 to 20mA	50 mA or less	5 to 20mA (*3)		50 mA or less		
Indicator lamp	LED (Lit when ON)		Yellow LED (Lit when ON)	Red/greenLED (Lit when ON)	Yellow LED (Lit when ON)	YellowLED (Lit when ON)	Red/greenLED (Lit when ON)
Leakage current	1 mA or less	10 μA or less	1 mA or less		10 μA or less		
Weight g	1 m: 10 3 m: 29						

*3:Max. load current: 20mA at 25°C. The current is lower than 20 mA if the operating ambient temperature around the switch is higher than 25˚C....(5 to 10mA with 60°C)...)
*4: The F-switch uses a bend-resistant lead wire.

Cylinder weight

Unit: g

Stroke(mm) / Bore size(mm)	5		10		15		20		30		Additional weight	
	No magnet/ switch rail	With magnet + switch rail	No magnet/ switch rail	With magnet + switch rail	No magnet/ switch rail	With magnet + switch rail	No magnet/ switch rail	With magnet + switch rail	No magnet/ switch rail	With magnet + switch rail	With buffer	Weight per switch
ø4.5	52	56	52	56	-	-			-	-	3	Refer to the weight in the switch specifications.
ø6	71	76	71	76	80	86	89	95	107	114	4	
ø8	100	105	100	105	123	129	123	129	146	153	5	

Theoretical thrust table

Unit: N

Bore size(mm)	Working pressure MPa					
	0.2	0.3	0.4	0.5	0.6	0.7
ø4.5	-	3.8	5.1	6.4	7.7	8.9
ø6	4.2	6.4	8.5	10.6	12.7	14.8
ø8	8.6	13.0	17.3	21.6	25.9	30.2

How to order

● Without switch (without magnet for switch)

LCM-R - 6 - 10 - R ——— J2

● With switch (built-in magnet for switch)

LCM-R - 6 - 10 - R - F2H - R - J2

Ⓐ Bore size
Ⓑ Stroke
Ⓒ Piping direction
Ⓓ Switch model No.
Ⓔ Switch quantity
Ⓕ Option

Code	Description
Ⓐ Bore size (mm)	
4.5	ø4.5
6	ø6
8	ø8

Ⓑ Stroke (mm)

		Bore size		
		ø4.5	ø6	ø8
5	5	●	●	●
10	10	●	●	●
15	15	-	●	●
20	20	-	●	●
30	30	-	●	●

Ⓒ Piping direction	
R	Right from rod side
L	Left from rod side

Ⓓ Switch model No.

Straight lead wire	L-shaped lead wire	Contact	Voltage AC	Voltage DC	Indicator	Lead wire
-	**F2S***	Proximity		●	1-color LED	2-wire
F2H*	**F2V***			●		
-	**F3S***			●		3-wire
F3H*	**F3V***			●		
F3PH*	**F3PV***			●	1 color display (PNP output) (made to order)	3-wire
F2YH*	**F2YV***			●	2-color LED	2-wire
F3YH*	**F3YV***			●		3-wire

*** Lead wire length**	
Blank	1 m (standard)
3	3 m (option)

Ⓔ Switch quantity	
R	1 on rod side
H	1 on head side
D	2

Ⓕ Option	
B	With buffer
M *1	With magnet
F1 *1, 2	With magnet + switch rail (one switch groove)
F2 *1	With magnet + switch rail (two switch grooves)
J*	With positioning pin (*···· number of pins)

⚠ Precautions for model No. selection

*1: Can be omitted if the switch model No. is specified.
*2: Available only for ø4.5.

[Example of model No.]

LCM-R-6-10-R-F2H-R-J2

Model : Linear slide cylinder,
Double acting/stroke adjustable/push-pull type

Ⓐ Bore size : ø6 mm
Ⓑ Stroke : 10 mm
Ⓒ Piping direction : Right when viewed from rod side
Ⓓ Switch model No. : Proximity switch F2H, lead wire 1 m
Ⓔ Switch quantity : 1 on rod side
Ⓕ Option : With positioning pin (2)

How to order switch

● Switch body + switch rail + magnet

LCM - F2H - R - 6 - 10

Ⓓ Switch model No.
Ⓔ Switch quantity
Ⓐ Bore size
Ⓑ Stroke

● Switch body only

SW - F2H

Ⓓ Switch model No.

● Magnet only

LCM - M - 6

Magnet
Ⓐ Bore size

● Switch rail only

·ø4.5

LCM - F1/F2 - 4.5

Switch rail

·ø6, ø8

LCM - F2 - 6 - 10

Switch rail
Ⓐ Bore size
Ⓑ Stroke

How to order discrete positioning pin

LCM - J* - 4.5

Positioning pin
Number of pins

LCM
LCR
LCG
LCW
LCX
STM
STG
STS/STL
STR2
UCA2
ULK*
JSK/M2
JSG
JSC3/JSC4
USSD
UFCD
USC
UB
JSB3
LMB
LML
HCM
HCA
LBC
CAC4
UCAC2
CAC-N
UCAC-N
RCS2
RCC2
PCC
SHC
MCP
GLC
MFC
BBS
RRC
GRC
RV3*
NHS
HRL
LN
Hand
Chuk
MecHnd/Chuk
ShkAbs
FJ
FK
SpdContr
Ending

Internal structure and parts list

● LCM-R-4.5

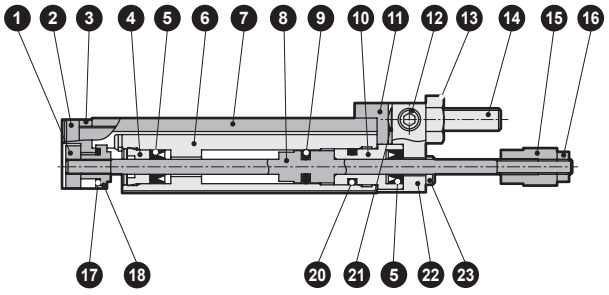

● LCM-R-6,8

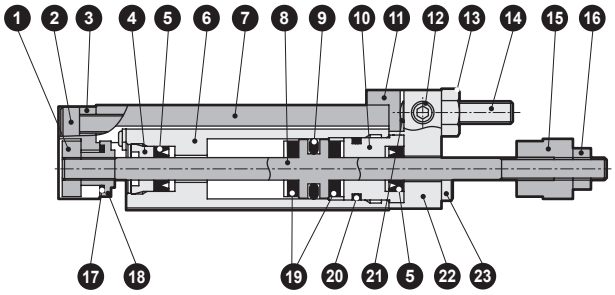

● LCM-R-4.5 to 8 With magnet/switch rail

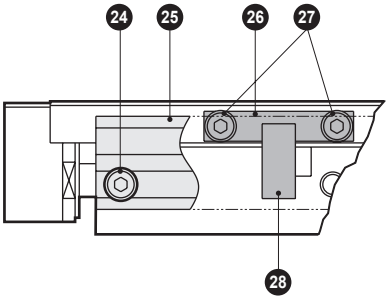

· Positioning pin (-J)

Cannot be disassembled

Parts list

No.	Part name	Material	Remarks	No.	Part name	Material		Remarks
1	Floating bush A	Stainless steel		16	Hexagon nut	ø4.5	Stainless steel	
2	Hexagon socket head cap screw	Stainless steel				ø6,ø8	Steel	Nickel plating
3	End plate	Aluminum alloy		17	O-ring	Nitrile rubber		
4	Rod cover	Acetal resin		18	Floating bush B	Stainless steel		
5	Rod packing	Nitrile rubber		19	Cushion rubber	Urethane rubber (ø6, ø8)		
6	Cylinder body	Stainless steel		20	O-ring	Nitrile rubber		
7	Slide table	Stainless steel		21	Small machine screw	Stainless steel		
8	Piston	Stainless steel		22	Stopper A	Steel		Nickel plating
9	Piston packing	Nitrile rubber		23	Hexagon socket head cap screw	Stainless steel		
10	Cover	Aluminum alloy		24	Hexagon socket head cap screw	Stainless steel		
11	Stopper B	Steel	Nickel plating	25	Switch rail	Aluminum alloy		
12	Small machine screw	Stainless steel		26	Plate	Aluminum alloy		
13	Hexagon nut	Stainless steel		27	Hexagon socket head cap screw	Stainless steel		
14	Stopper bolt	Stainless steel		28	Magnet	Plastic		
15	Adjustable stopper	Steel	Nickel plating	29	Positioning pin	Steel		

Dimensions (bore size: ø4.5)

● LCM-R-4.5

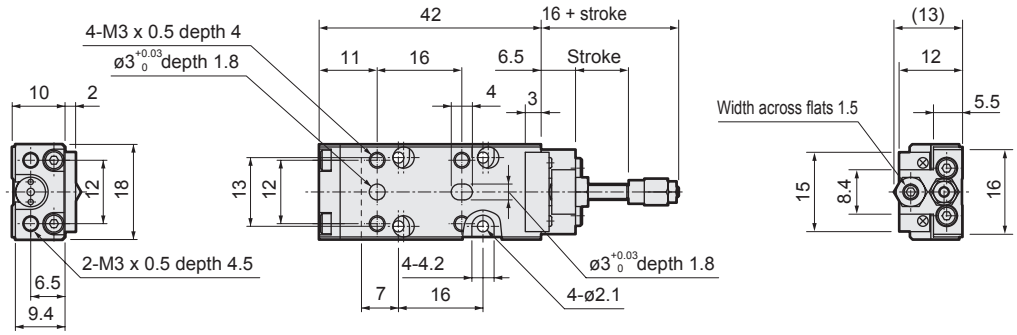

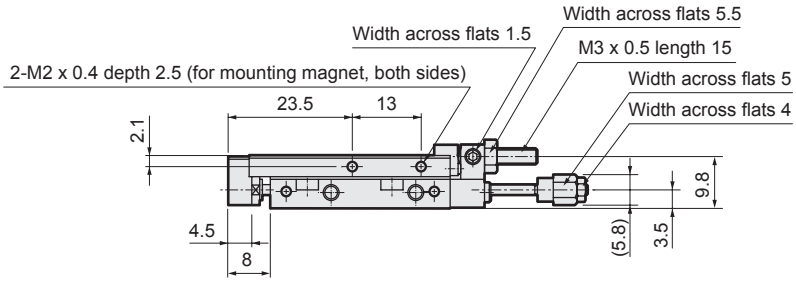

· With magnet/cylinder switch (piping direction: -R)

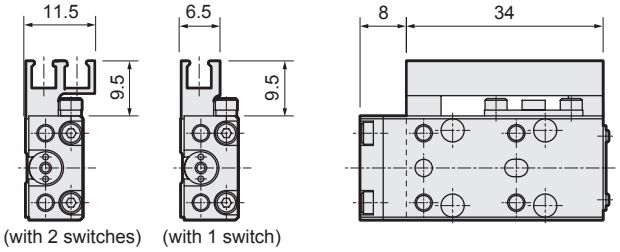

· With buffer (-B)

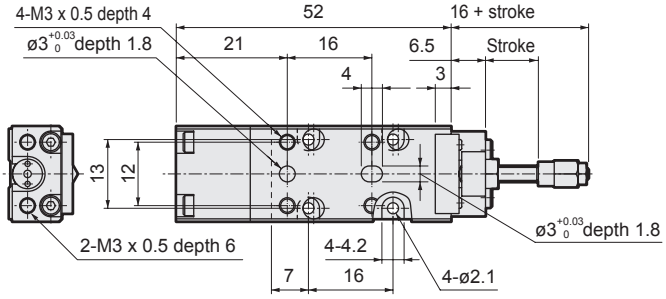

· With magnet/cylinder switch (piping direction: -L)

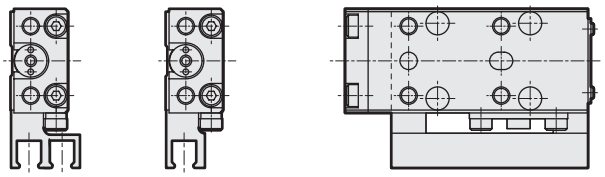

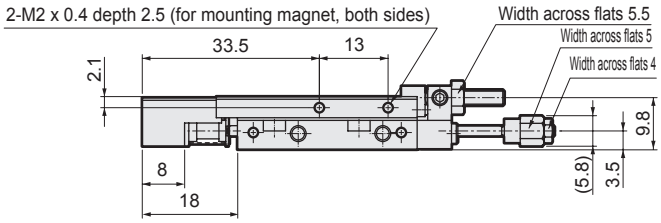

Note : Refer to page 47 for switch mounting position dimensions.

Dimensions other than those listed above are the same as those of double acting/single rod. Refer to page 14.

LCM
LCR
LCG
LCW
LCX
STM
STG
STS/STL
STR2
UCA2
ULK*
JSK/M2
JSG
JSC3/JSC4
USSD
UFCD
USC
UB
JSB3
LMB
LML
HCM
HCA
LBC
CAC4
UCAC2
CAC-N
UCAC-N
RCS2
RCC2
PCC
SHC
MCP
GLC
MFC
BBS
RRC
GRC
RV3*
NHS
HRL
LN
Hand
Chuk
MecHnd/Chuk
ShkAbs
FJ
FK
SpdContr
Ending

Dimensions (bore size: ø6) CAD

● LCM-R-6

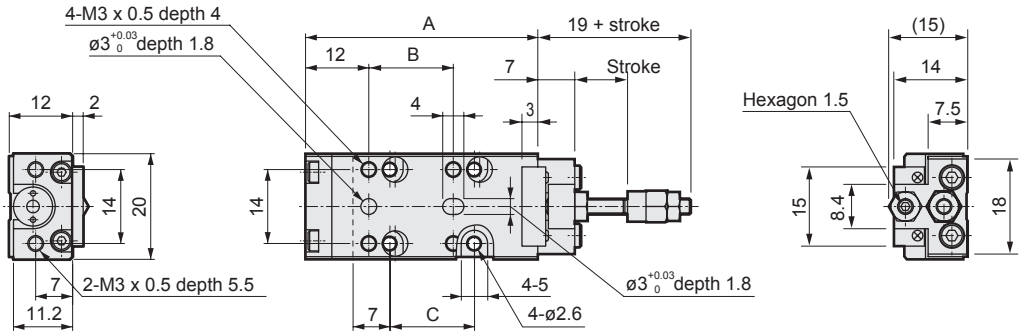

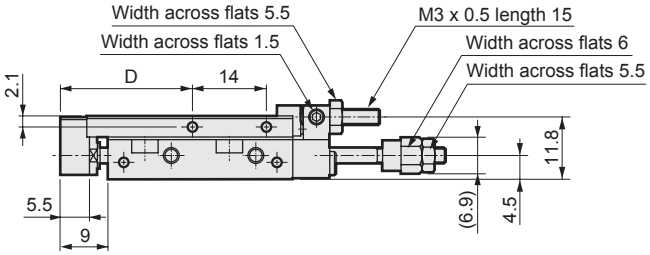

Stroke	A	B	C	D	H	I	J
5	44	16	16	25	35	54	35
10	44	16	16	25	35	54	35
15	49	21	21	30	40	59	40
20	54	26	26	35	45	64	45
30	64	36	36	45	55	74	55

· With magnet/cylinder switch (piping direction: -R)

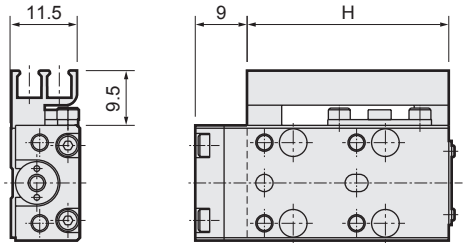

· With magnet/cylinder switch (piping direction: -L)

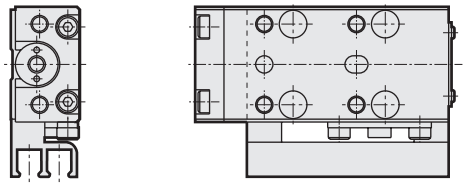

· With buffer (-B)

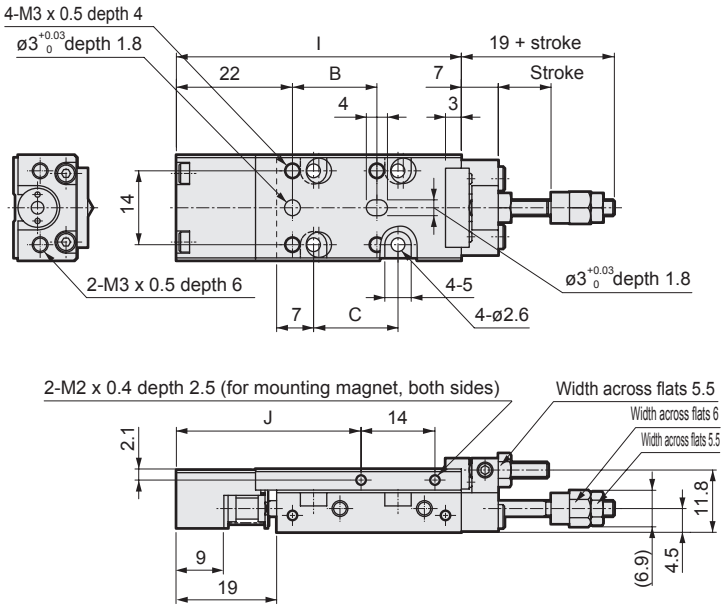

Note : Refer to page 47 for switch mounting position dimensions.

Dimensions other than those listed above are the same as those of double acting/single rod.
Refer to page 15.

Dimensions (bore size: ø8)

● LCM-R-8

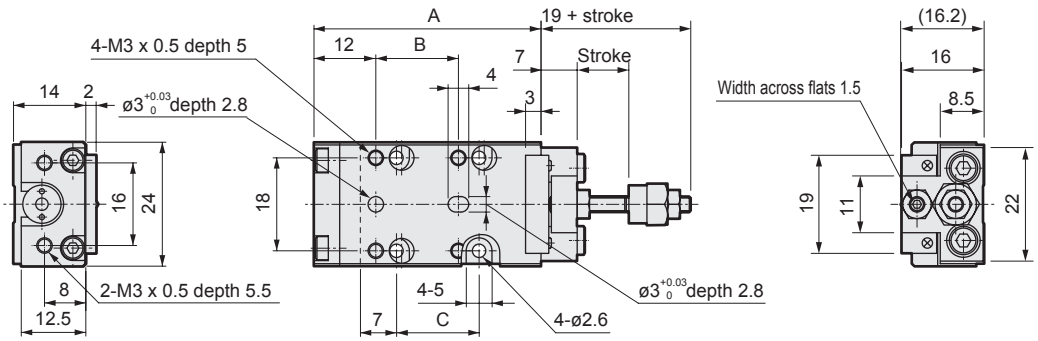

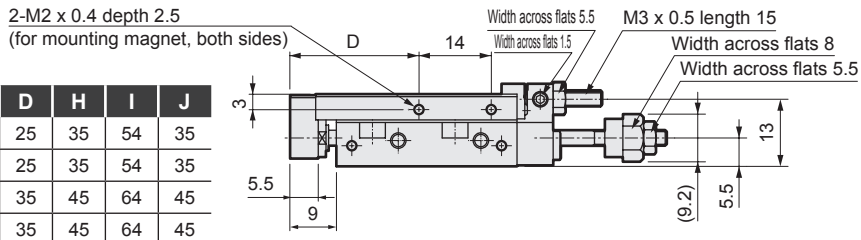

Stroke	A	B	C	D	H	I	J
5	44	16	16	25	35	54	35
10	44	16	16	25	35	54	35
15	54	26	26	35	45	64	45
20	54	26	26	35	45	64	45
30	64	36	36	45	55	74	55

· With magnet/cylinder switch (piping direction: -R)

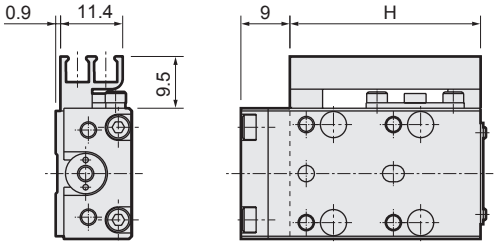

· With magnet/cylinder switch (piping direction: -L)

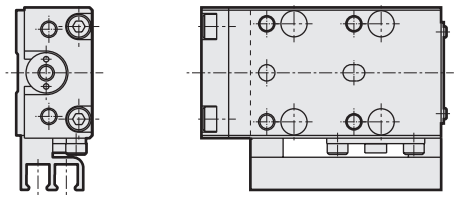

· With buffer (-B)

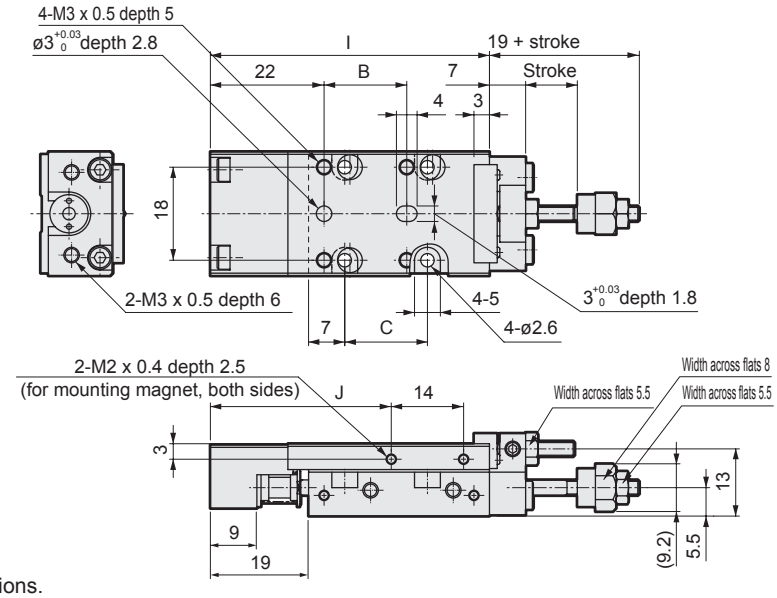

Note : Refer to page 47 for switch mounting position dimensions.

Dimensions other than those listed above are the same as those of double acting/single rod.
Refer to page 16.

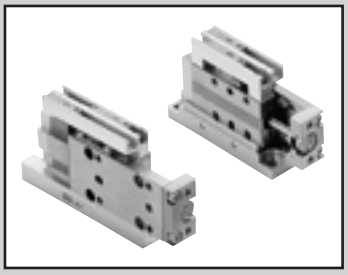

Linear slide cylinder Double acting/side mounting

LCM-A Series

● Bore size: ø4.5, ø6, ø8

JIS symbol 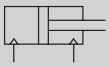

RoHS CAD

Specifications

Descriptions		LCM-A		
Bore size	mm	ø4.5	ø6	ø8
Actuation		Double acting		
Working fluid		Compressed air		
Max. working pressure	MPa	0.7		
Min. working pressure	MPa	0.2		0.15
Proof pressure	MPa	1.05		
Ambient temperature	°C	0 to 60		
Port size		M3		
Stroke tolerance	mm	+1.0 0		
Working piston speed	mm/s	30 to 500		
Cushion		No	With rubber cushion	
Lubrication		Not required (use turbine oil class 1 ISO VG32 if lubrication is necessary))		
Allowable absorbed energy	J	Refer to the table on page 50.		

With buffer specifications

Descriptions			LCM-*-*-*-B
Buffer stroke		mm	4(MAX)
Buffer part spring load	When set	N	0.3
	Operating	N	0.7

Stroke

Bore size (mm)	Standard stroke (mm)	Min. stroke with switch (mm)
ø4.5	5/10	5
ø6	5/10/15/20/30	
ø8	5/10/15/20/30	

*1: Products with stroke other than standard stroke are not available.

Switch specifications

Descriptions	Proximity 2-wire	Proximity 3-wire	Proximity 2-wire		Proximity 3-wire		
	F2S	F3S	F2H/F2V	F2YH/F2YV	F3H/F3V	F3PH/F3PV (Made to order)	F3YH/F3YV
Applications	Dedicated for programmable controller	Programmable For controller, relay	Programmable Controller dedicated		For programmable controller, relay		
Output method	-	NPN output	-		NPN output	PNP output	NPN output
Power supply voltage	-	10 to 28 VDC	-		10 to 28 VDC	4.5 to 28 VDC	10 to 28 VDC
Load voltage	10 to 30 VDC	30 VDC or less	10 to 30 VDC	24 VDC ±10%	30 VDC or less		
Load current	5 to 20mA	50 mA or less	5 to 20mA (*3)		50 mA or less		
Indicator lamp	LED (Lit when ON)		Yellow LED (Lit when ON)	Red/green LED (Lit when ON)	Yellow LED (Lit when ON)	Yellow LED (Lit when ON)	Red/green LED (Lit when ON)
Leakage current	1 mA or less	10 μA or less	1 mA or less		10 μA or less		
Weight g	1 m: 10 3 m: 29						

*1 : Refer to Ending Page 1 for detailed switch specifications and dimensions.
*2 : Switches other than the above models, such as switches with connectors, are also available. Refer to Ending Page 1.
*3 : The max. load current is 20 mA at 25°C. The current is lower than 20 mA if the operating ambient temperature around the switch is higher than 25°C. (5 to 10 mA at 60°C)
*4 : The F-switch uses a bend-resistant lead wire.

Cylinder weight

Unit: g

Stroke(mm)	5		10		15		20		30		Additional weight	
Bore size(mm)	No magnet/ switch rail	With magnet + switch rail	No magnet/ switch rail	With magnet + switch rail	No magnet/ switch rail	With magnet + switch rail	No magnet/ switch rail	With magnet + switch rail	No magnet/ switch rail	With magnet + switch rail	With buffer	Weight per switch
ø4.5	59	63	59	63	-	-	-	-	-	-	3	Refer to the weight in the switch specifications.
ø6	78	83	78	83	88	94	98	104	118	125	4	
ø8	106	111	106	111	132	138	132	138	158	165	5	

Theoretical thrust table

Unit: N

Bore size(mm)	Operating direction	Working pressure MPa					
		0.2	0.3	0.4	0.5	0.6	0.7
ø4.5	Push	3.2	4.8	6.4	8.0	9.5	11.1
	Pull	2.6	3.8	5.1	6.4	7.7	8.9
ø6	Push	5.7	8.5	11.3	14.1	17.0	19.8
	Pull	4.2	6.4	8.5	10.6	12.7	14.8
ø8	Push	10.1	15.1	20.1	25.1	30.2	35.2
	Pull	8.6	13.0	17.3	21.6	25.9	30.2

How to order

● Without switch (without magnet for switch)

LCM-A - 6 - 10 - R ——— J2

● With switch (built-in magnet for switch)

LCM-A - 6 - 10 - R - F2H - R - J2

Ⓐ Bore size
Ⓑ Stroke
Ⓒ Table direction
Ⓓ Switch model No.
Ⓔ Switch quantity
Ⓕ Option

Code	Description
Ⓐ Bore size (mm)	
4.5	ø4.5
6	ø6
8	ø8

Ⓑ Stroke (mm)

		Bore size		
		ø4.5	ø6	ø8
5	5	●	●	●
10	10	●	●	●
15	15	-	●	●
20	20	-	●	●
30	30	-	●	●

Ⓒ Table direction	
R	Right from rod side
L	Left from rod side

Ⓓ Switch model No.

Straight lead wire	L-shaped lead wire	Contact	Voltage AC	Voltage DC	Indicator	Lead wire
-	**F2S***	Proximity		●	1-color LED	2-wire
F2H*	**F2V***			●		
-	**F3S***			●		3-wire
F3H*	**F3V***			●		
F3PH*	**F3PV***			●	1 color display (PNP output) (made to order)	3-wire
F2YH*	**F2YV***			●	2-color LED	2-wire
F3YH*	**F3YV***			●		3-wire

*** Lead wire length**	
Blank	1 m (standard)
3	3 m (option)

Ⓔ Switch quantity	
R	1 on rod side
H	1 on head side
D	2

Ⓕ Option	
B	With buffer
M *1	With magnet
F1 *1, 2	With magnet + switch rail (one switch groove)
F2 *1	With magnet + switch rail (two switch grooves)
J*	With positioning pin (*···· number of pins)

⚠ Precautions for model No. selection

*1: Can be omitted if the switch model No. is specified.
*2: Available only for ø4.5.

[Example of model No.]

LCM-A-6-10-R-F2H-R-J2

Model : Linear slide cylinder, double acting/side mounting
Ⓐ Bore size : ø6 mm
Ⓑ Stroke : 10 mm
Ⓒ Piping direction : Right when viewed from rod side
Ⓓ Switch model No. : Proximity switch F2H, lead wire 1 m
Ⓔ Switch quantity : 1 on rod side
Ⓕ Option : With positioning pin (2)

How to order switch

● Switch body + switch rail + magnet

LCM - F2H - R - 6 - 10

Ⓓ Switch model No.
Ⓔ Switch quantity
Ⓐ Bore size
Ⓑ Stroke

● Switch body only

SW - F2H

Ⓓ Switch model No.

● Magnet only

LCM - M - 6

Magnet
Ⓐ Bore size

● Switch rail only

·ø4.5

LCM - F1 / F2 - 4.5

Switch rail

·ø6, ø8

LCM - F2 - 6 - 10

Switch rail
Ⓐ Bore size
Ⓑ Stroke

How to order discrete positioning pin

LCM - J* - 4.5

Positioning pin
Number of pins

Internal structure and parts list

● LCM-A-4.5

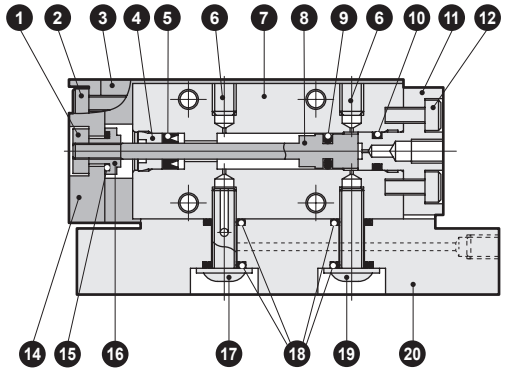

● LCM-A-6,8

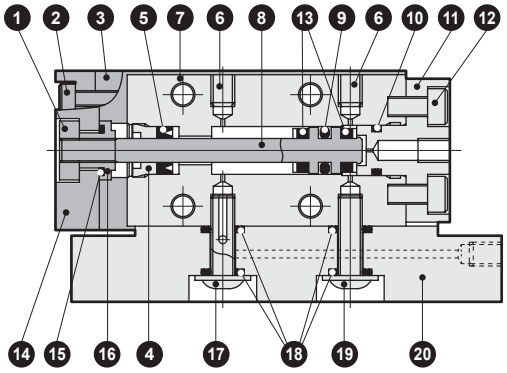

● LCM-R-4.5 to 8-F With magnet/switch rail

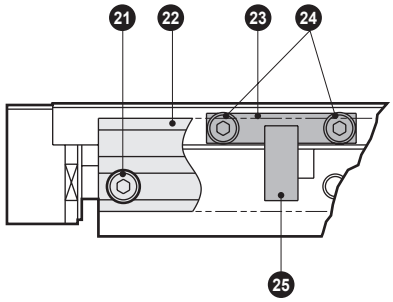

· Positioning pin (-J)

Cannot be disassembled

Parts list

No.	Part name	Material	Remarks	No.	Part name	Material	Remarks
1	Floating bush A	Stainless steel		14	End plate	Aluminum alloy	
2	Hexagon socket head cap screw	Stainless steel		15	O-ring	Nitrile rubber	
3	Slide table	Stainless steel		16	Floating bush B	Stainless steel	
4	Rod cover	Acetal resin		17	Hexagon socket head cap screw	Stainless steel	
5	Rod packing	Nitrile rubber		18	O-ring	Nitrile rubber	
6	Small machine screw	Stainless steel		19	Hexagon socket head cap screw	Stainless steel	
7	Cylinder body	Stainless steel		20	Base	Aluminum alloy	
8	Piston	Stainless steel		21	Hexagon socket head cap screw	Stainless steel	
9	Piston packing	Nitrile rubber		22	Switch rail	Aluminum alloy	
10	O-ring	Nitrile rubber		23	Plate	Aluminum alloy	
11	Head cover	Aluminum alloy	Alumite	24	Hexagon socket head cap screw	Stainless steel	
12	Bolt	Stainless steel		25	Magnet	Plastic	
13	Cushion rubber	Urethane rubber (ø6, ø8)		26	Positioning pin	Steel	

MEMO

LCM
LCR
LCG
LCW
LCX
STM
STG
STS/STL
STR2
UCA2
ULK*
JSK/M2
JSG
JSC3/JSC4
USSD
UFCD
USC
UB
JSB3
LMB
LML
HCM
HCA
LBC
CAC4
UCAC2
CAC-N
UCAC-N
RCS2
RCC2
PCC
SHC
MCP
GLC
MFC
BBS
RRC
GRC
RV3*
NHS
HRL
LN
Hand
Chuk
MecHnd/Chuk
ShkAbs
FJ
FK
SpdContr
Ending

Dimensions (bore size: ø4.5)

CAD

● LCM-A-4.5-R (piping direction: right)

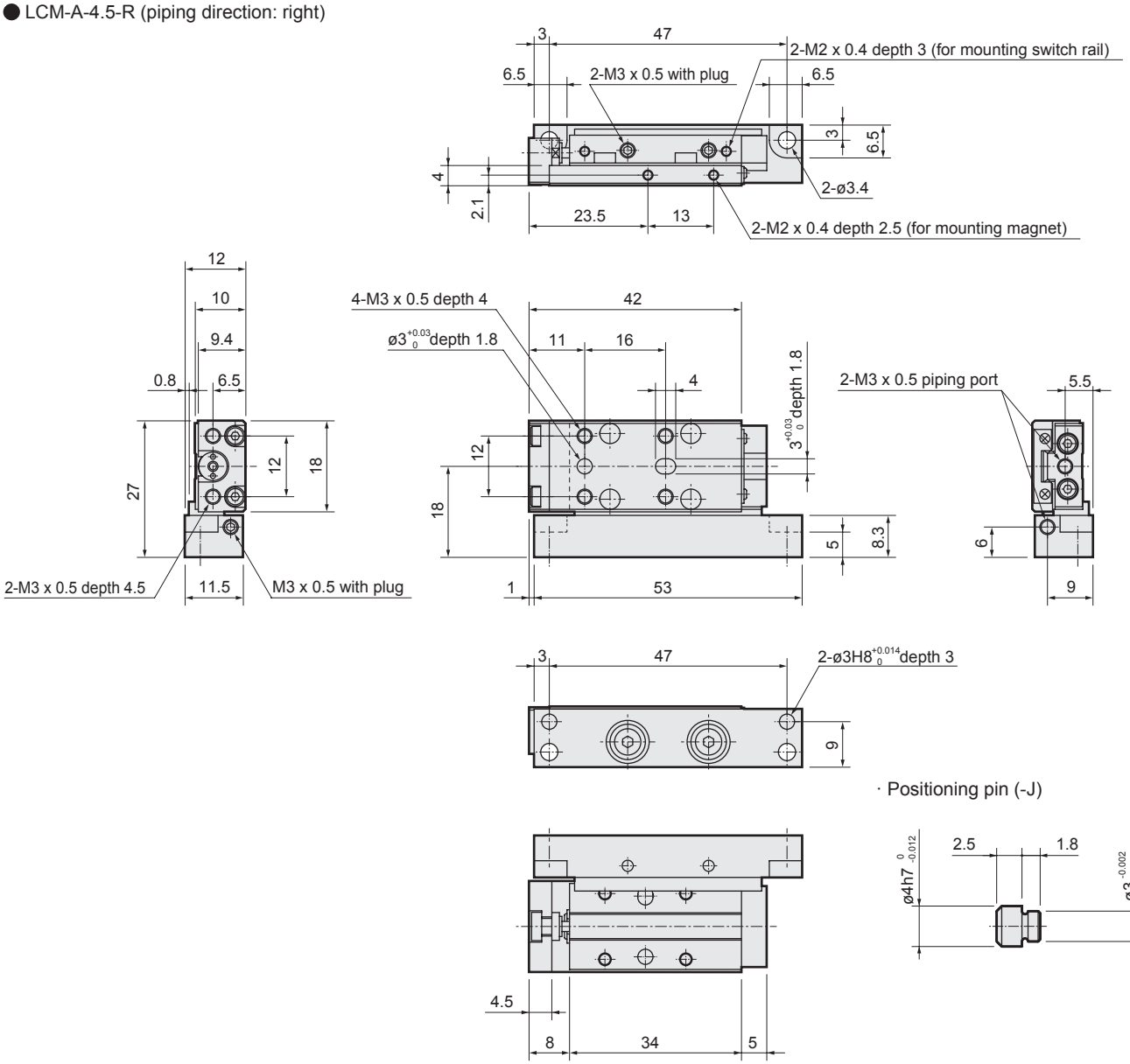

· Positioning pin (-J)

· With magnet/cylinder switch

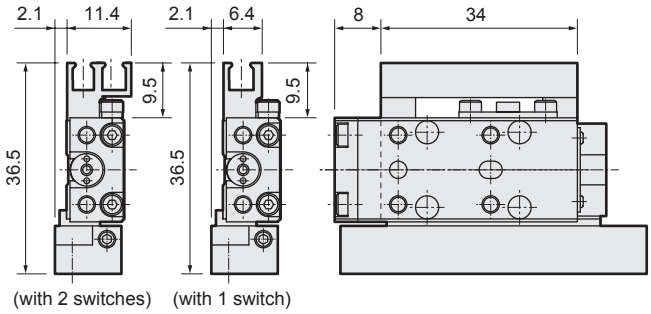

· With buffer (-B)

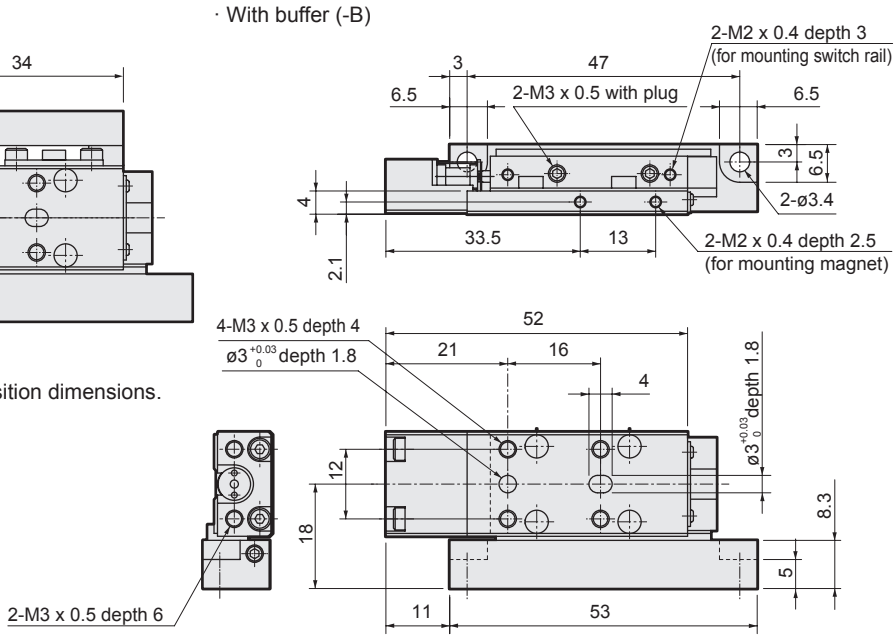

Note : Refer to page 47 for switch mounting position dimensions.

Dimensions (bore size: ø4.5)

● LCM-A-4.5-L (piping direction: left)

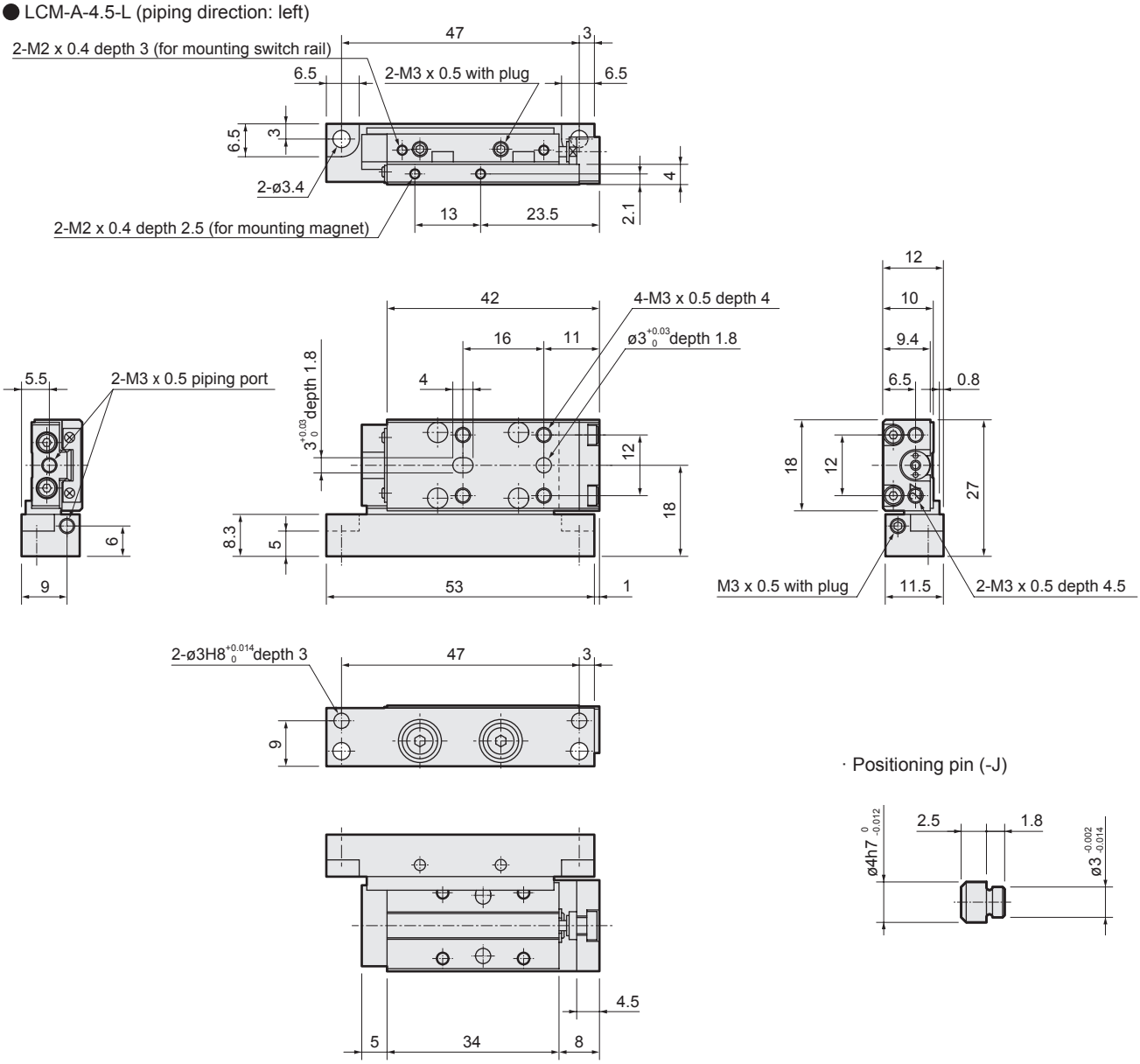

· With magnet/cylinder switch

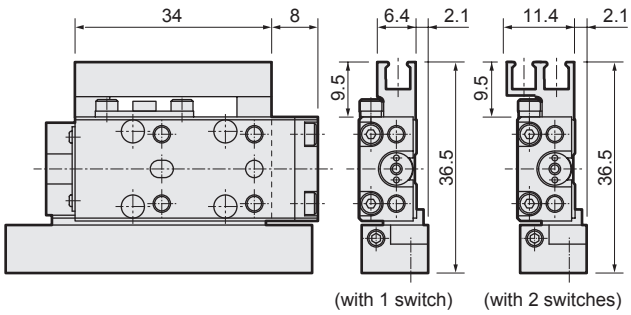

Note : Refer to page 47 for switch mounting position dimensions.

· With buffer (-B)

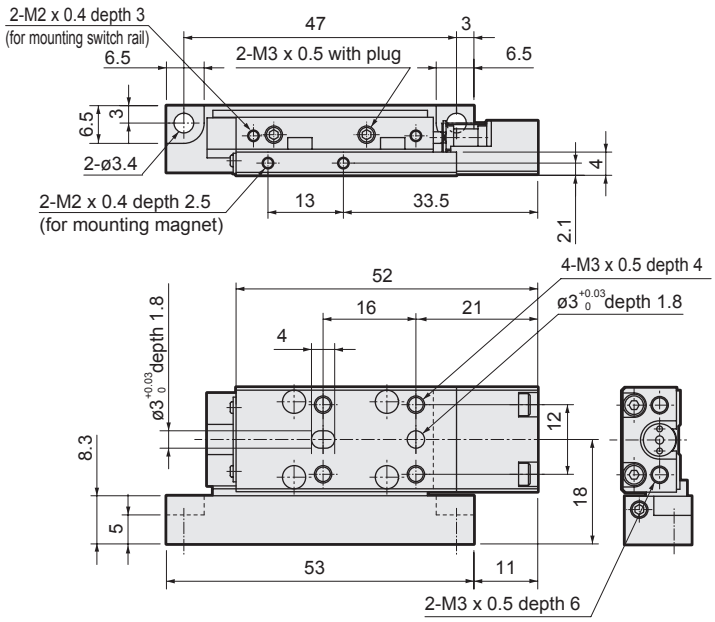

Dimensions (bore size: ø6)

● LCM-A-6-R (piping direction: right)

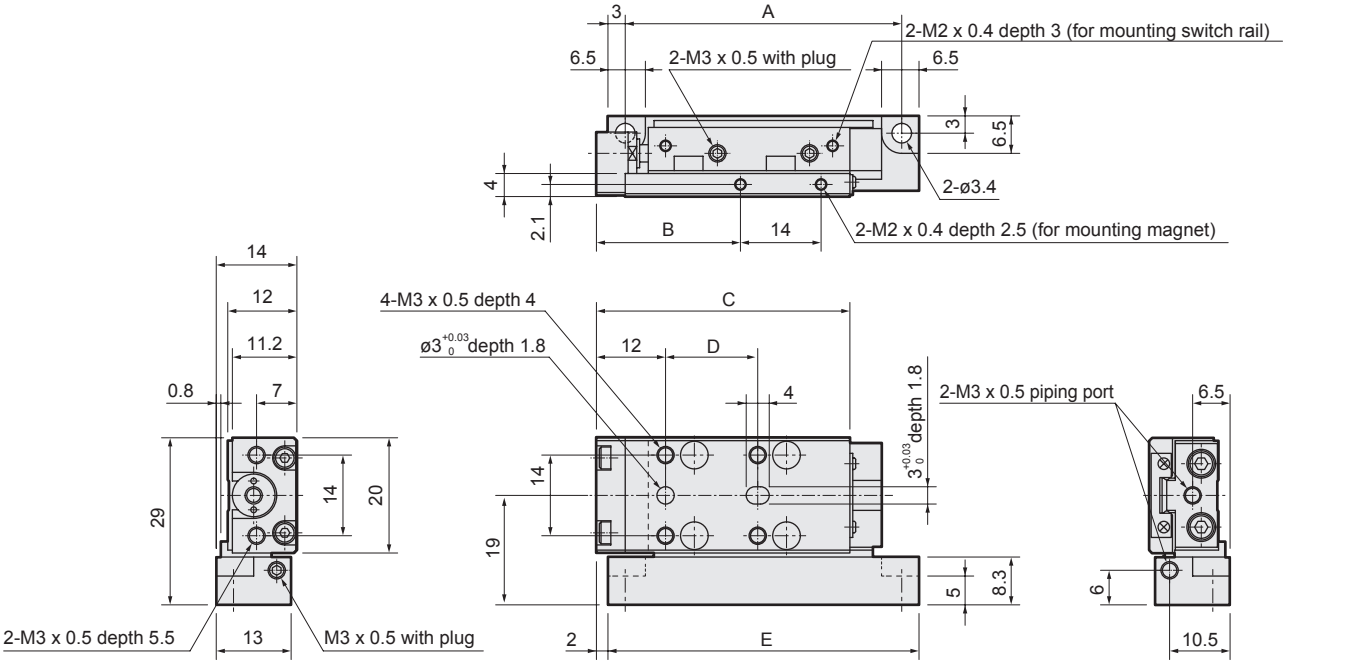

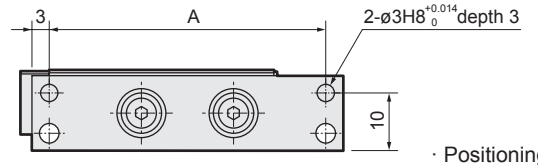

· Positioning pin (-J)

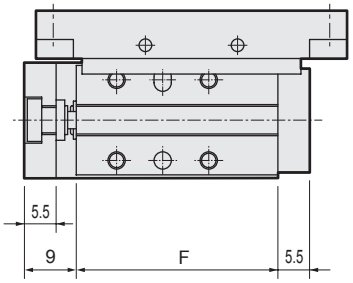

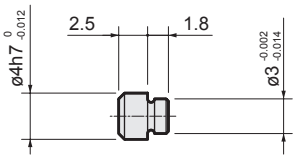

Stroke	A	B	C	D	E	F	G	H	I
5	48	25	44	16	54	35	35	35	54
10	48	25	44	16	54	35	35	35	54
15	53	30	49	21	59	40	40	40	59
20	58	35	54	26	64	45	45	45	64
30	68	45	64	36	74	55	55	55	74

· With magnet/cylinder switch

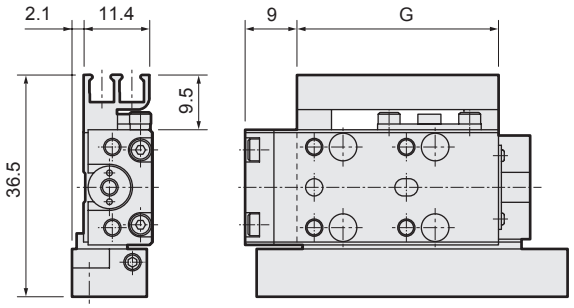

· With buffer (-B)

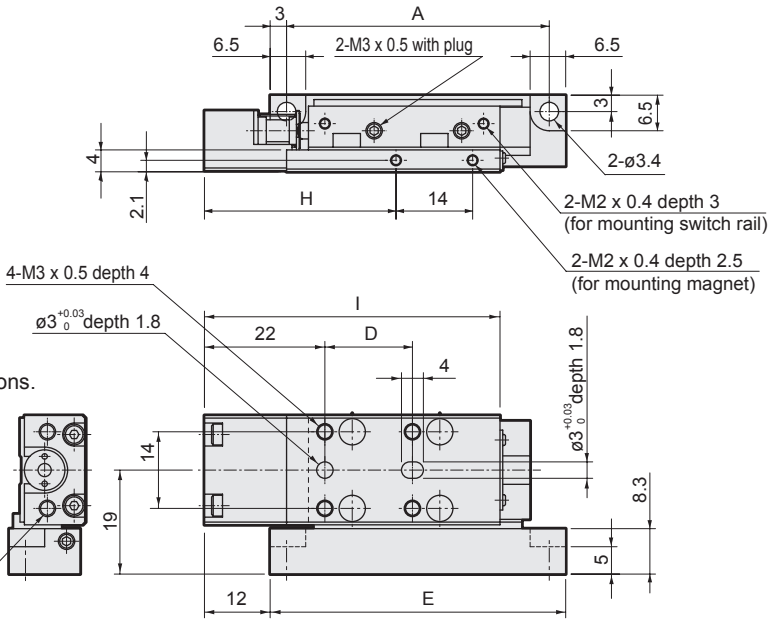

Note : Refer to page 47 for switch mounting position dimensions.

Dimensions (bore size: ø6)

● LCM-A-6-L (piping direction: left)

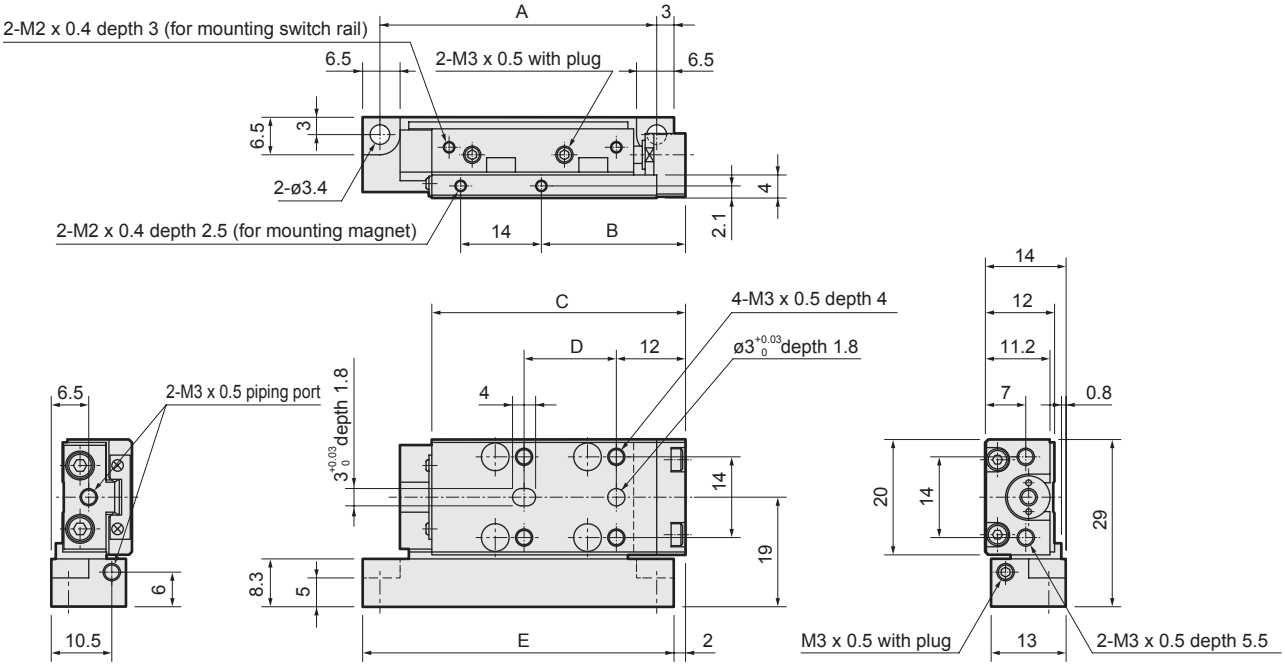

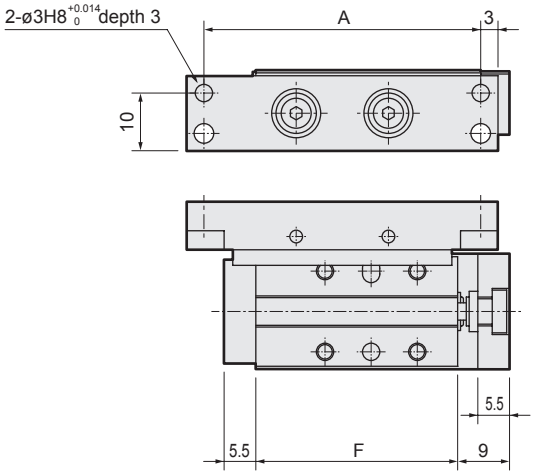

· Positioning pin (-J)

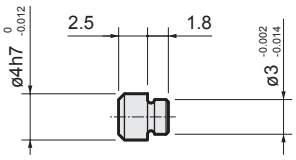

Stroke	A	B	C	D	E	F	G	H	I
5	48	25	44	16	54	35	35	35	54
10	48	25	44	16	54	35	35	35	54
15	53	30	49	21	59	40	40	40	59
20	58	35	54	26	64	45	45	45	64
30	68	45	64	36	74	55	55	55	74

· With magnet/cylinder switch

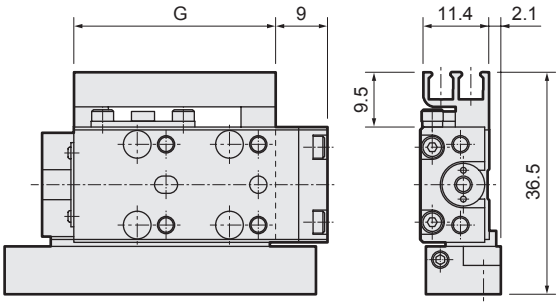

· With buffer (-B)

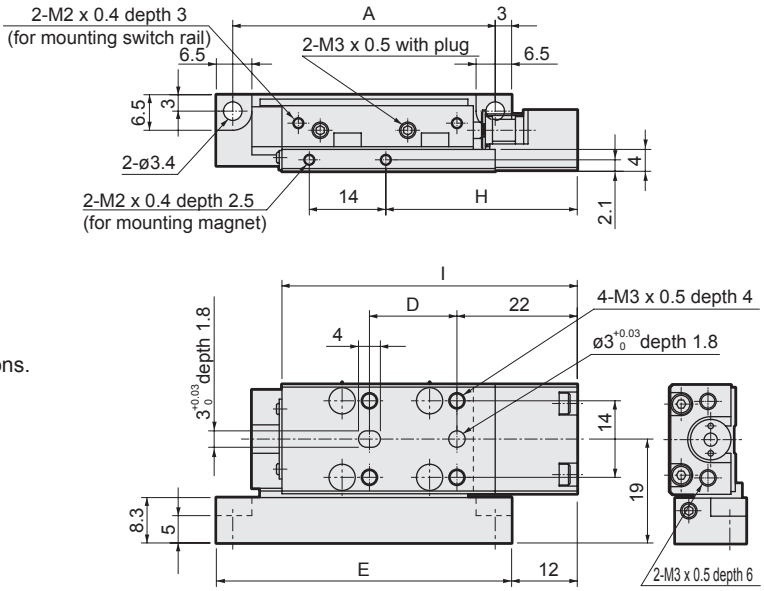

Note : Refer to page 47 for switch mounting position dimensions.

LCM
LCR
LCG
LCW
LCX
STM
STG
STS/STL
STR2
UCA2
ULK*
JSK/M2
JSG
JSC3/JSC4
USSD
UFCD
USC
UB
JSB3
LMB
LML
HCM
HCA
LBC
CAC4
UCAC2
CAC-N
UCAC-N
RCS2
RCC2
PCC
SHC
MCP
GLC
MFC
BBS
RRC
GRC
RV3*
NHS
HRL
LN
Hand
Chuk
MecHnd/Chuk
ShkAbs
FJ
FK
SpdContr
Ending

Dimensions (bore size: ø8) CAD

● LCM-A-8-R (piping direction: right)

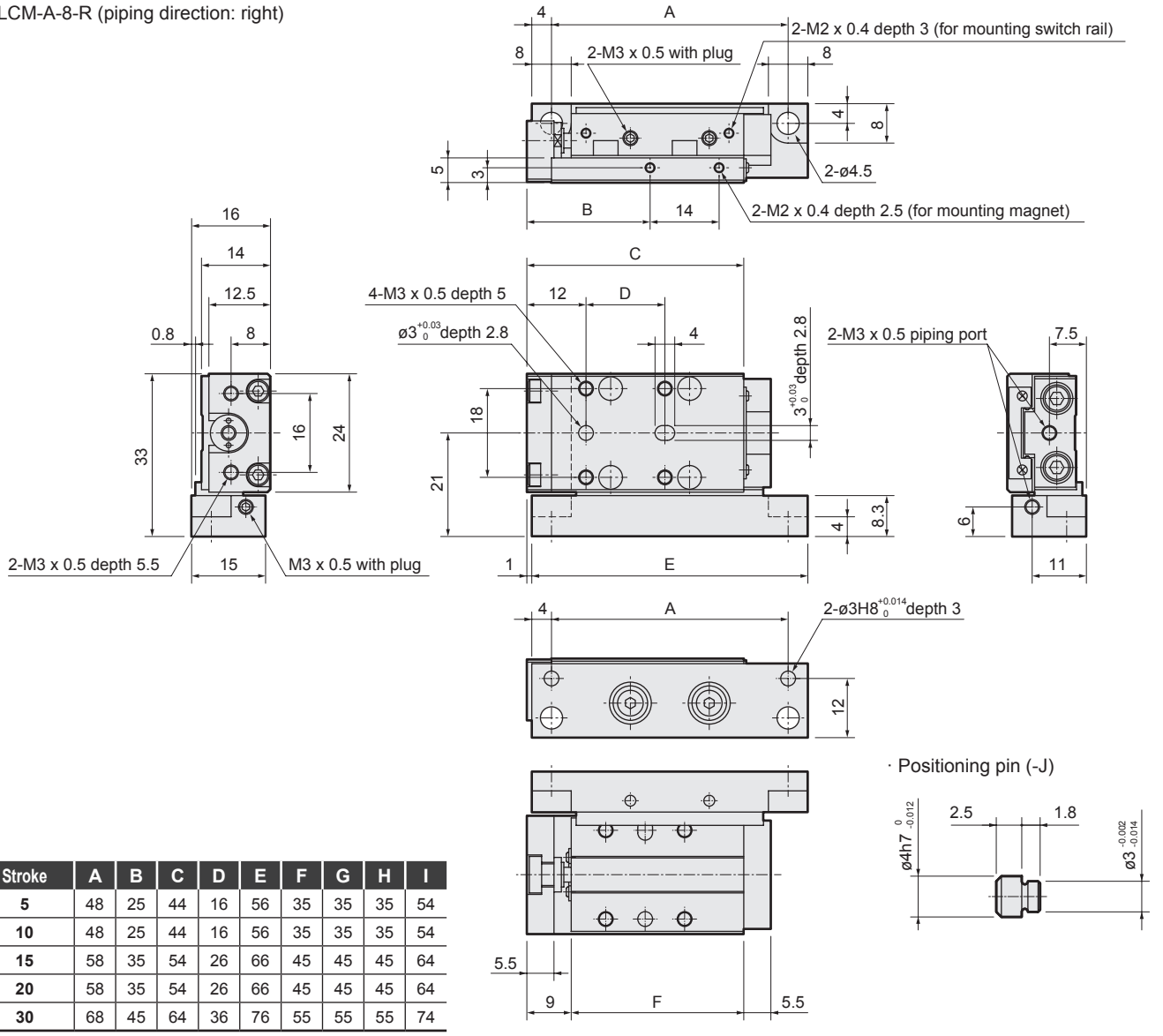

· Positioning pin (-J)

Stroke	A	B	C	D	E	F	G	H	I
5	48	25	44	16	56	35	35	35	54
10	48	25	44	16	56	35	35	35	54
15	58	35	54	26	66	45	45	45	64
20	58	35	54	26	66	45	45	45	64
30	68	45	64	36	76	55	55	55	74

· With magnet/cylinder switch

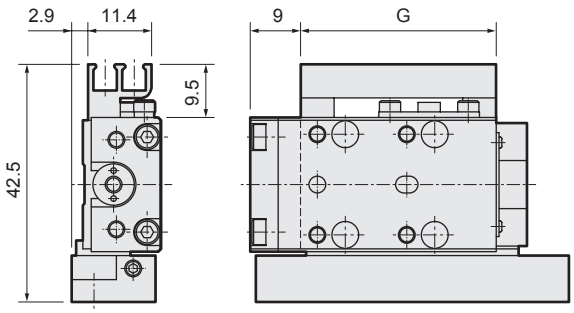

Note: Refer to page 47 for switch mounting position dimensions.

· With buffer (-B)

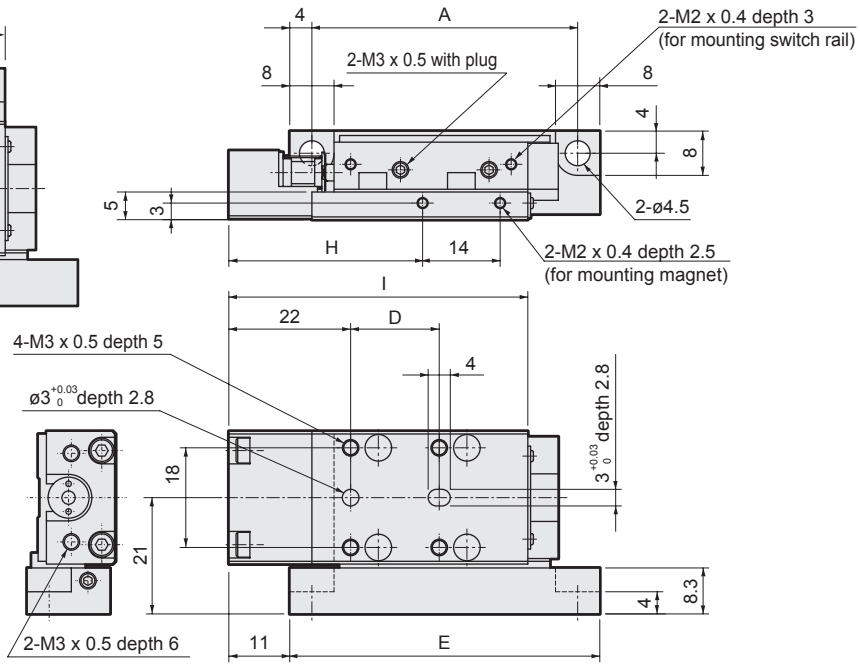

Dimensions (bore size: ø8)

CAD

● LCM-A-8-L (piping direction: left)

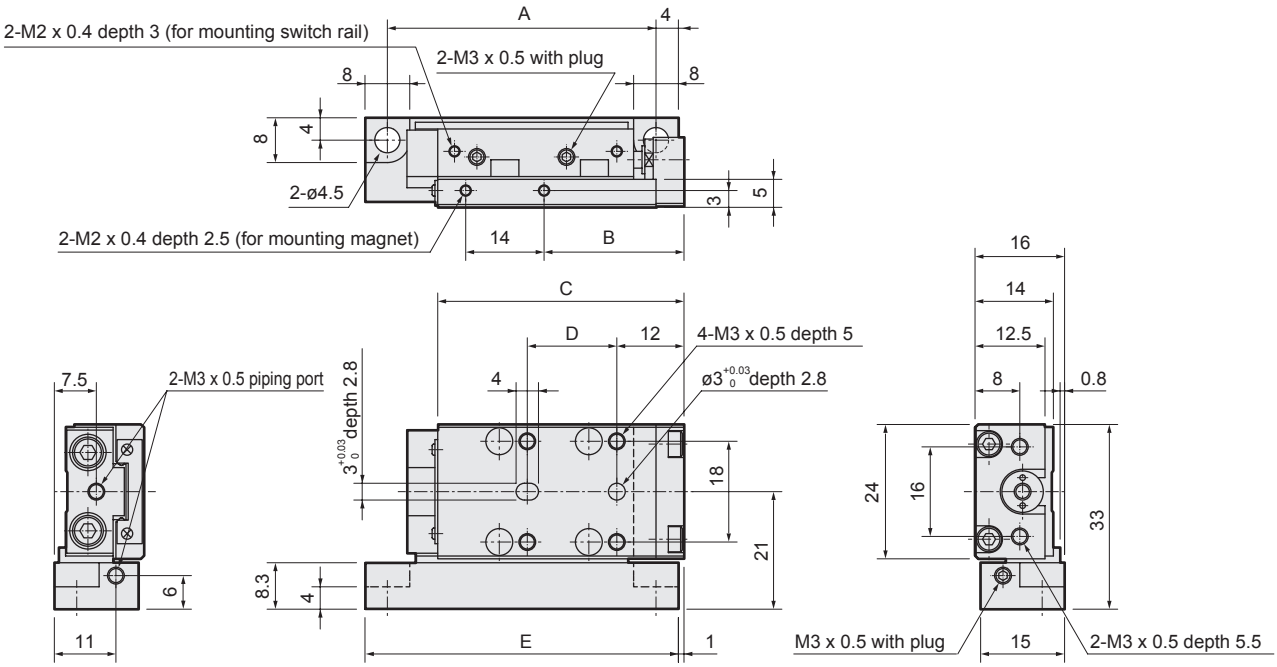

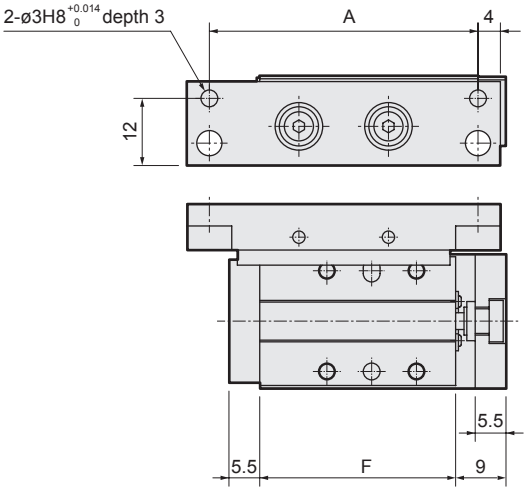

· Positioning pin (-J)

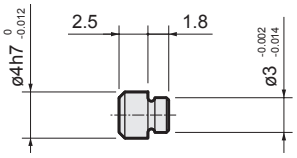

Stroke	A	B	C	D	E	F	G	H	I
5	48	25	44	16	56	35	35	35	54
10	48	25	44	16	56	35	35	35	54
15	58	35	54	26	66	45	45	45	64
20	58	35	54	26	66	45	45	45	64
30	68	45	64	36	76	55	55	55	74

· With magnet/cylinder switch

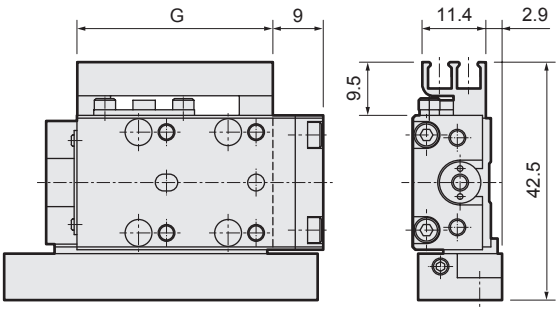

· With buffer (-B)

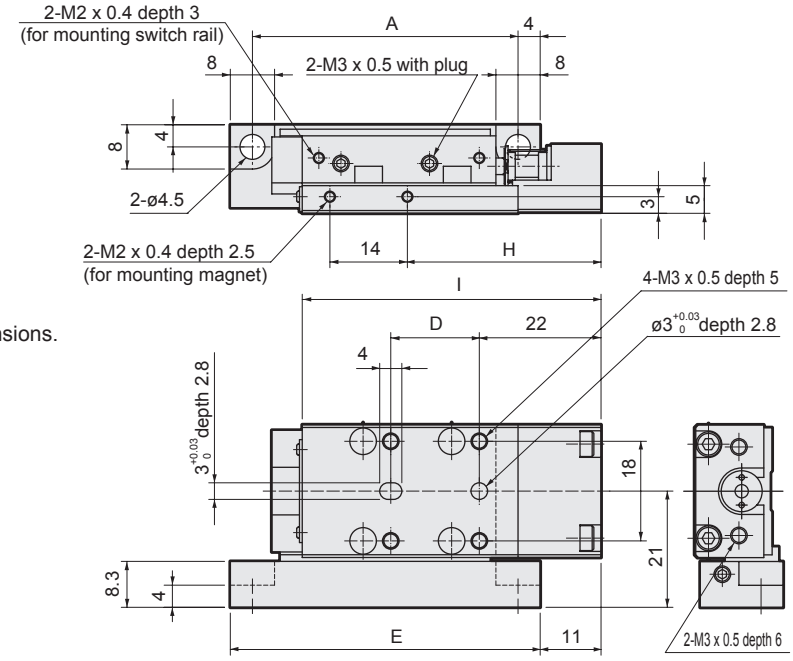

Note : Refer to page 47 for switch mounting position dimensions.

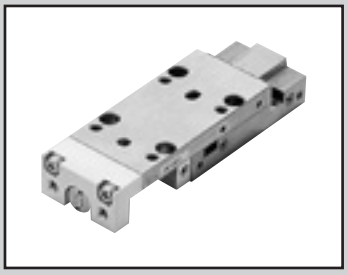

Linear slide cylinder Double acting/single rod clean-room specifications

LCM-P73 Series

● Bore size: ø4.5, ø6, ø8

JIS symbol 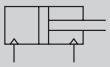

RoHS CAD

Specifications

Descriptions		LCM -P73		
Bore size	mm	ø4.5	ø6	ø8
Actuation		Double acting		
Working fluid		Compressed air		
Max. working pressure	MPa	0.7		
Min. working pressure	MPa	0.2		0.15
Proof pressure	MPa	1.05		
Ambient temperature	°C	0 to 60		
Port size		M3		
Stroke tolerance	mm	+1.0 0		
Working piston speed	mm/s	30 to 300		
Cushion		No	With rubber cushion	
Lubrication		Not available		
Allowable absorbed energy	J	Refer to the table on page 50.		

Stroke

Bore size(mm)	Standard stroke(mm)	Min. stroke with switch(mm)
ø4.5	5/10	5
ø6	5/10/15/20/30	
ø8	5/10/15/20/30	

*1: Products with stroke other than standard stroke are not available.

Switch specifications

Descriptions	Proximity 2-wire	Proximity 3-wire	Proximity 2-wire		Proximity 3-wire		
	F2S	F3S	F2H/F2V	F2YH/F2YV	F3H/F3V	F3PH/F3PV (Made to order)	F3YH/F3YV
Applications	Dedicated for programmable controller	Programmable For controller, relay	Programmable Controller dedicated		For programmable controller, relay		
Output method	-	NPN output	-		NPN output	PNP output	NPN output
Power supply voltage	-	10 to 28 VDC	-		10 to 28 VDC	4.5 to 28 VDC	10 to 28 VDC
Load voltage	10 to 30 VDC	30 VDC or less	10 to 30 VDC	24 VDC ±10%	30 VDC or less		
Load current	5 to 20mA	50 mA or less	5 to 20mA (*3)		50 mA or less		
Indicator lamp	LED (Lit when ON)		Yellow LED (Lit when ON)	Red/green LED (Lit when ON)	Yellow LED (Lit when ON)	Yellow LED (Lit when ON)	Red/green LED (Lit when ON)
Leakage current	1 mA or less	10 μA or less	1 mA or less		10 μA or less		
Weight g	1 m: 10 3 m: 29						

*1 : Refer to Ending Page 1 for detailed switch specifications and dimensions.
*2 : Switches other than the above models, such as switches with connectors, are also available. Refer to Ending Page 1.
*3 : The max. load current is 20 mA at 25°C. The current is lower than 20 mA if the operating ambient temperature around the switch is higher than 25˚C. (5 to 10 mA at 60°C)
*4 : The F-switch uses a bend-resistant lead wire.

Cylinder weight

Unit: g

Stroke (mm)	5		10		15		20		30		Added weight
Bore size (mm)	No magnet/ switch rail	With magnet + switch rail	No magnet/ switch rail	With magnet + switch rail	No magnet/ switch rail	With magnet + switch rail	No magnet/ switch rail	With magnet + switch rail	No magnet/ switch rail	With magnet + switch rail	Weight per switch
ø4.5	45	49	45	49	-	-	-	-	-	-	Refer to the weight in the switch specifications.
ø6	61	66	61	66	69	75	77	83	93	100	
ø8	87	92	87	92	108	114	108	114	129	136	

Theoretical thrust table

Unit: N

Bore size (mm)	Operating direction	Working pressure MPa					
		0.2	0.3	0.4	0.5	0.6	0.7
ø4.5	Push	3.2	4.8	6.4	8.0	9.5	11.1
	Pull	2.6	3.8	5.1	6.4	7.7	8.9
ø6	Push	5.7	8.5	11.3	14.1	17.0	19.8
	Pull	4.2	6.4	8.5	10.6	12.7	14.8
ø8	Push	10.1	15.1	20.1	25.1	30.2	35.2
	Pull	8.6	13.0	17.3	21.6	25.9	30.2

LCM
LCR
LCG
LCW
LCX
STM
STG
STS/STL
STR2
UCA2
ULK*
JSK/M2
JSG
JSC3/JSC4
USSD
UFCD
USC
UB
JSB3
LMB
LML
HCM
HCA
LBC
CAC4
UCAC2
CAC-N
UCAC-N
RCS2
RCC2
PCC
SHC
MCP
GLC
MFC
BBS
RRC
GRC
RV3*
NHS
HRL
LN
Hand
Chuk
MecHnd/Chuk
ShkAbs
FJ
FK
SpdContr
Ending

How to order

● Without switch (without magnet for switch)

LCM - 6 - 10 - R ———— J2 P73

● With switch (built-in magnet for switch)

LCM - 6 - 10 - R - F2H - R - J2 P73

Ⓐ Bore size

Ⓑ Stroke

Ⓒ Piping direction

Ⓓ Switch model No.

Ⓔ Switch quantity

Ⓕ Option

Ⓖ Clean-room specifications

Code	Description
Ⓐ Bore size (mm)	
4.5	ø4.5
6	ø6
8	ø8

Ⓑ Stroke (mm)

		Bore size		
		ø4.5	**ø6**	**ø8**
5	5			
10	10			
15	15	-		
20	20	-		
30	30	-		

Ⓒ Piping direction	
R	Right from rod side
L	Left from rod side

Ⓓ Switch model No.

Straight lead wire	L-shaped lead wire	Contact	Voltage AC	Voltage DC	Indicator	Lead wire
-	**F2S***	Proximity			1-color LED	2-wire
F2H*	**F2V***					
-	**F3S***					3-wire
F3H*	**F3V***					
F3PH*	**F3PV***				1 color display (PNP output) (made to order)	3-wire
F2YH*	**F2YV***				2-color LED	2-wire
F3YH*	**F3YV***					3-wire

*** Lead wire length**	
Blank	1 m (standard)
3	3 m (option)

Ⓔ Switch quantity	
R	1 on rod side
H	1 on head side
D	2

Ⓕ Option	
M *1	With magnet
F1 *1, 2	With magnet + switch rail (one switch groove)
F2 *1	With magnet + switch rail (two switch grooves)
J*	With positioning pin (*···· number of pins)

Ⓖ Clean-room specifications	
P73	Vacuum treatment

⚠ Precautions for model No. selection

*1: Can be omitted if the switch model No. is specified.
*2: Available only for ø4.5.

[Example of model No.]

LCM-6-10-R-F2H-R-J2P73

Model No.: Linear slide cylinder, double acting

Ⓐ Bore size : ø6 mm
Ⓑ Stroke : 10 mm
Ⓒ Piping direction : Right when viewed from rod side
Ⓓ Switch model No. : Proximity switch F2H, lead wire 1 m
Ⓔ Switch quantity : 1 on rod side
Ⓕ Option : With positioning pin (2)
Ⓖ Clean-room specifications : Vacuum treatment

Internal structure and parts list

● LCM-4.5-P73

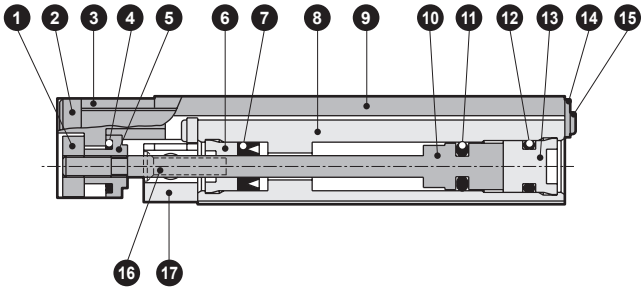

● LCM-6,8-P73

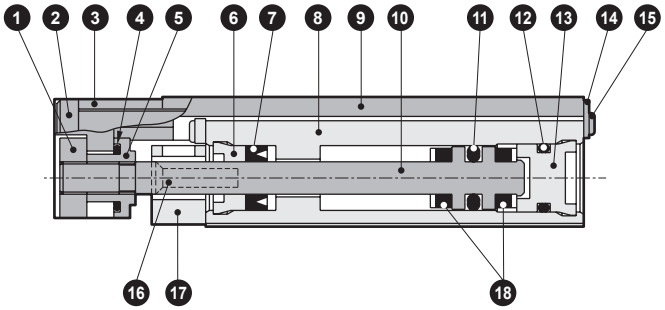

● LCM-4.5 to 8-F-P73 With magnet/switch rail

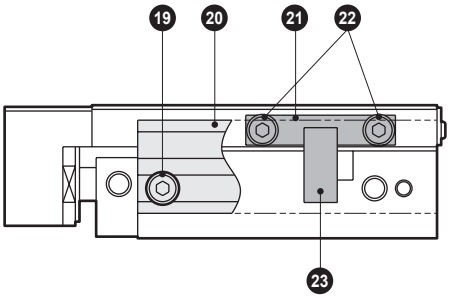

·Positioning pin

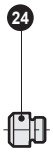

Cannot be disassembled

Parts list

No.	Part name	Material	Remarks	No.	Part name	Material	Remarks
1	Floating bush A	Stainless steel		13	Cover	Acetal resin	
2	Hexagon socket head cap screw	Stainless steel		14	Stop plate	Stainless steel	
3	End plate	Aluminum alloy		15	Small machine screw	Stainless steel	
4	O-ring	Nitrile rubber		16	Small machine screw	Stainless steel	
5	Floating bush B	Stainless steel		17	Dust collection block	Aluminum alloy	
6	Rod cover	Acetal resin		18	Cushion rubber	Urethane rubber (ø6, ø8)	
7	Rod packing	Nitrile rubber		19	Hexagon socket head cap screw	Stainless steel	
8	Cylinder body	Stainless steel		20	Switch rail	Aluminum alloy	
9	Slide table	Stainless steel		21	Plate	Aluminum alloy	
10	Piston	Stainless steel		22	Hexagon socket head cap screw	Stainless steel	
11	Piston packing	Nitrile rubber		23	Magnet	Plastic	
12	O-ring	Nitrile rubber		24	Positioning pin	Steel	

LCM
LCR
LCG
LCW
LCX
STM
STG
STS/STL
STR2
UCA2
ULK*
JSK/M2
JSG
JSC3/JSC4
USSD
UFCD
USC
UB
JSB3
LMB
LML
HCM
HCA
LBC
CAC4
UCAC2
CAC-N
UCAC-N
RCS2
RCC2
PCC
SHC
MCP
GLC
MFC
BBS
RRC
GRC
RV3*
NHS
HRL
LN
Hand
Chuk
MecHnd/Chuk
ShkAbs
FJ
FK
SpdContr
Ending

Dimensions (bore size: ø4.5) CAD

● LCM-4.5-P73

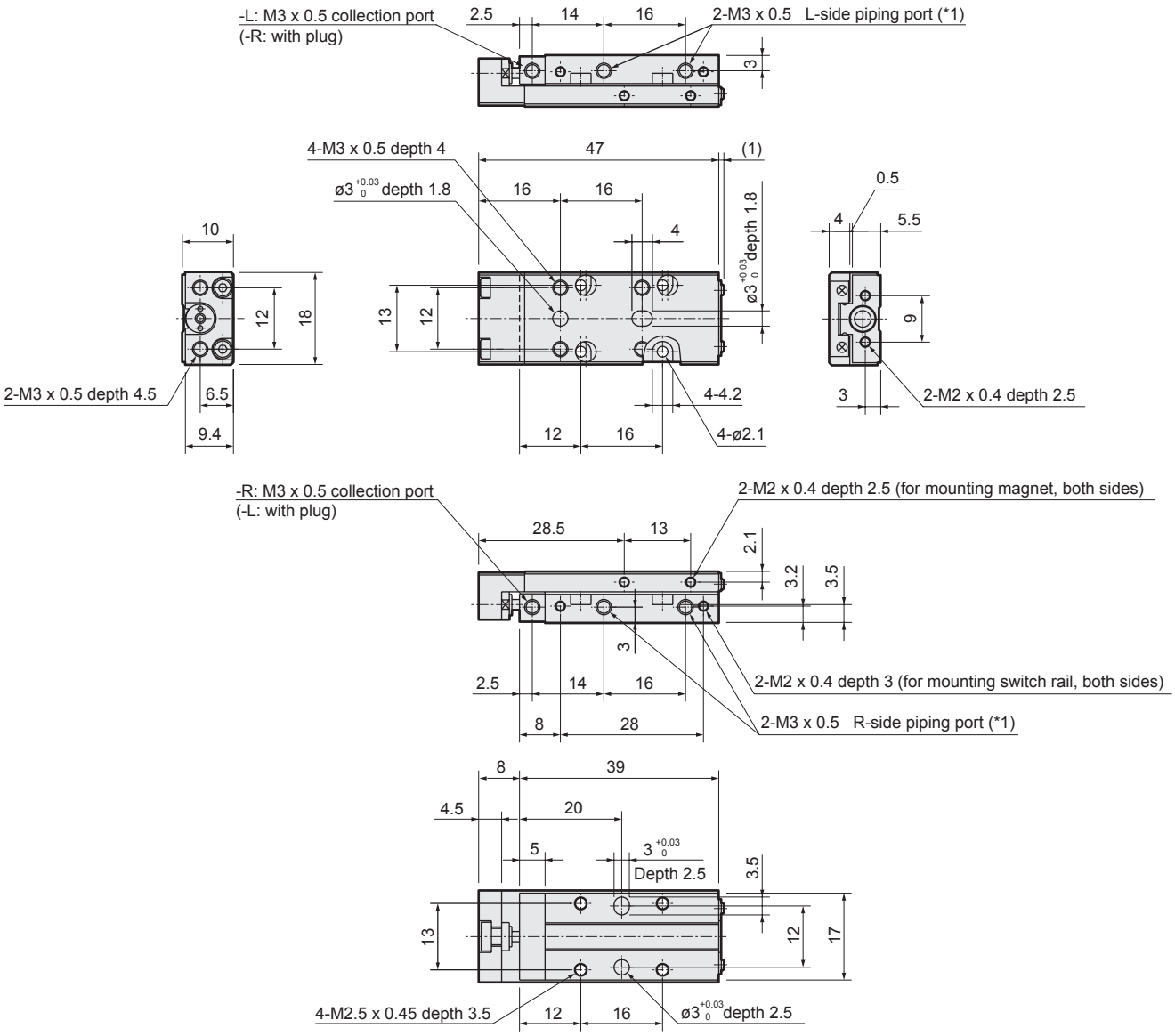

(*1) Plug is attached to the opposite side to the piping port specified with the model No.

· With magnet/cylinder switch (piping direction: -R)

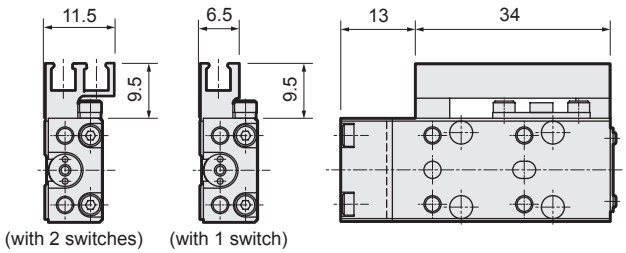

· With magnet/cylinder switch (piping direction: -L)

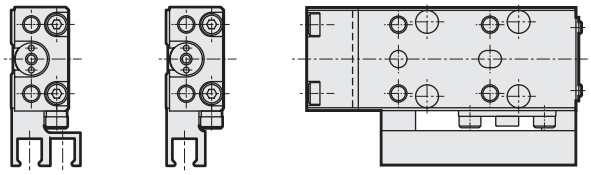

· Positioning pin (-J)

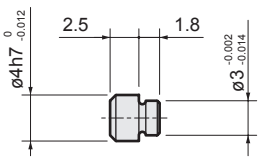

Note : Refer to page 47 for switch mounting position dimensions.

Dimensions (bore size: ø6)

● LCM-6-P73

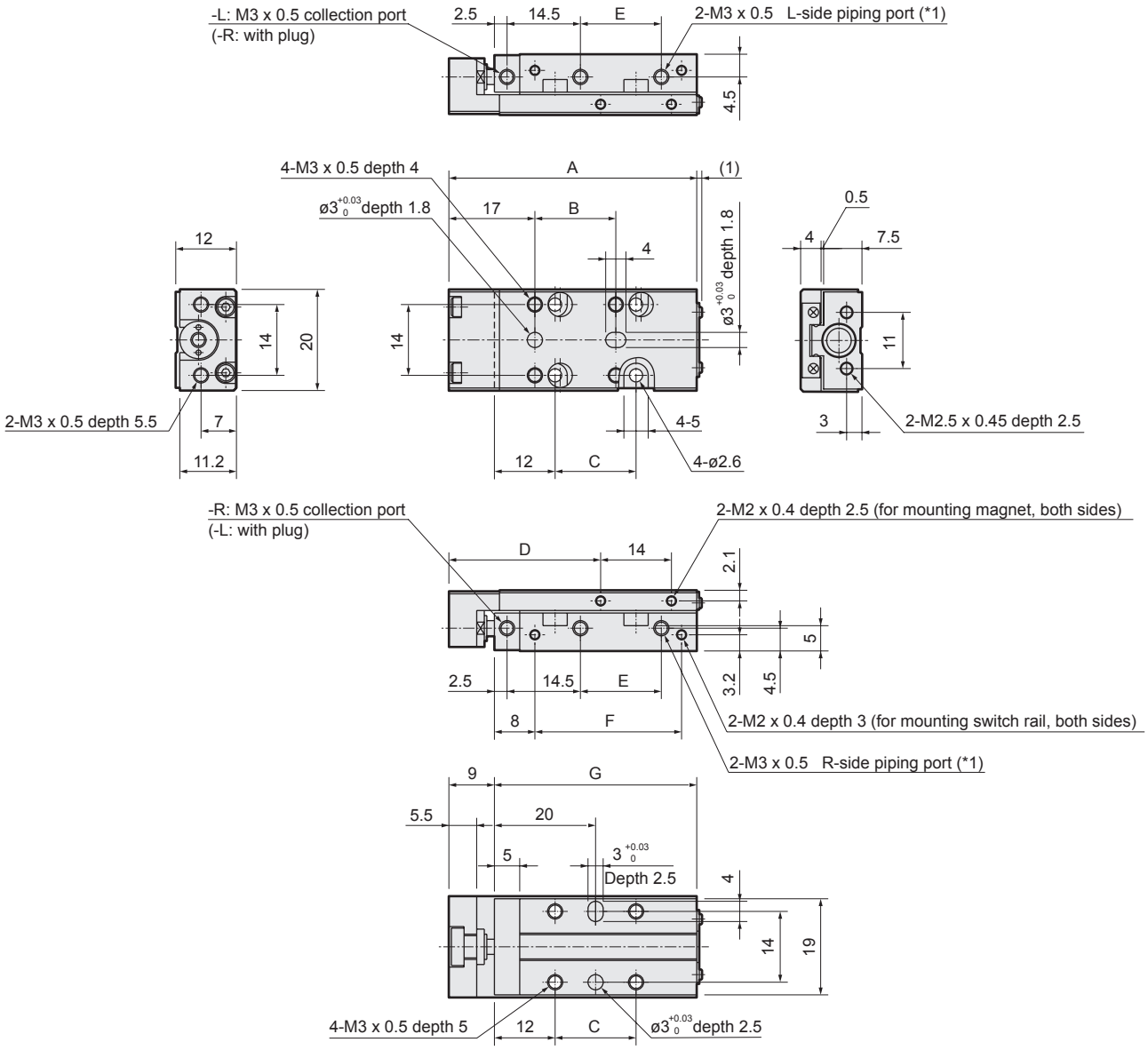

(*1) Plug is attached to the opposite side to the piping port specified with the model No.

· With magnet/cylinder switch (piping direction: -R)

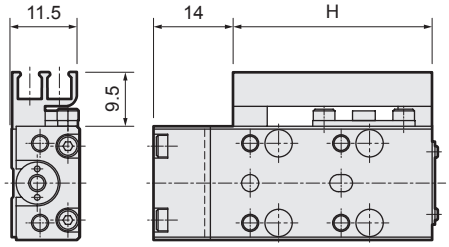

· With magnet/cylinder switch (piping direction: -L)

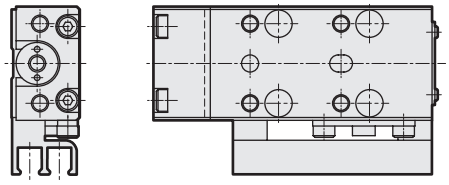

· Positioning pin (-J)

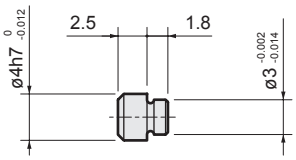

Stroke	A	B	C	D	E	F	G	H
5	49	16	16	30	16	29	40	35
10	49	16	16	30	16	29	40	35
15	54	21	21	35	21	34	45	40
20	59	26	26	40	26	39	50	45
30	69	36	36	50	36	49	60	55

Note : Refer to page 47 for switch mounting position dimensions.

LCM
LCR
LCG
LCW
LCX
STM
STG
STS/STL
STR2
UCA2
ULK*
JSK/M2
JSG
JSC3/JSC4
USSD
UFCD
USC
UB
JSB3
LMB
LML
HCM
HCA
LBC
CAC4
UCAC2
CAC-N
UCAC-N
RCS2
RCC2
PCC
SHC
MCP
GLC
MFC
BBS
RRC
GRC
RV3*
NHS
HRL
LN
Hand
Chuk
MecHnd/Chuk
ShkAbs
FJ
FK
SpdContr
Ending

Dimensions (bore size: ø8) CAD

● LCM-8-P73

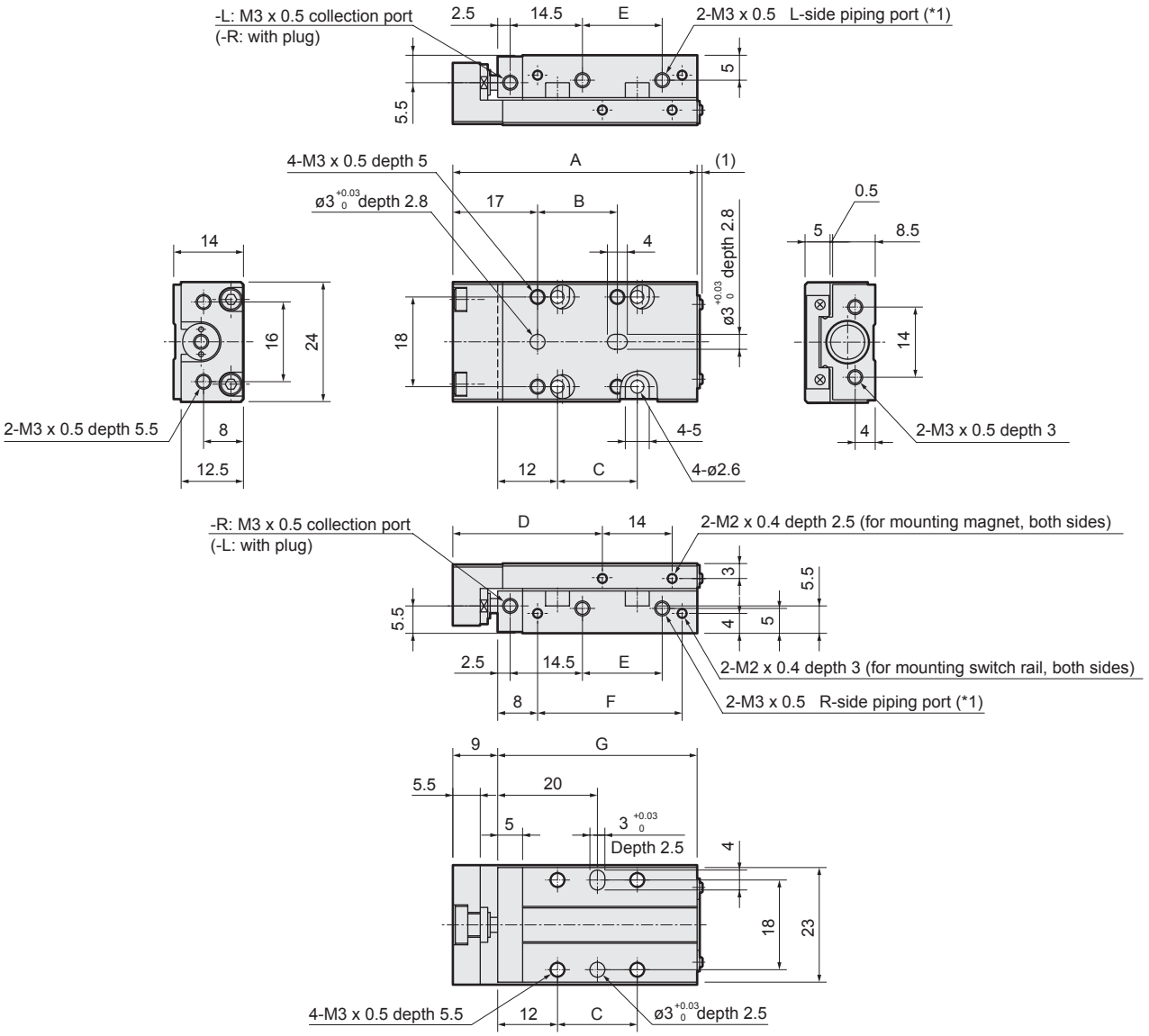

(*1) Plug is attached to the opposite side to the piping port specified with the model No.

· With magnet/cylinder switch (piping direction: -R)

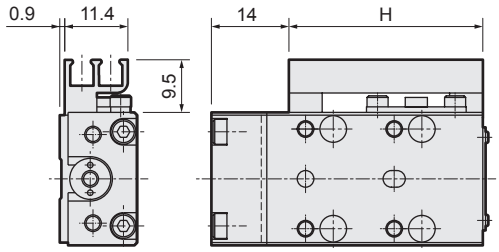

· With magnet/cylinder switch (piping direction: -L)

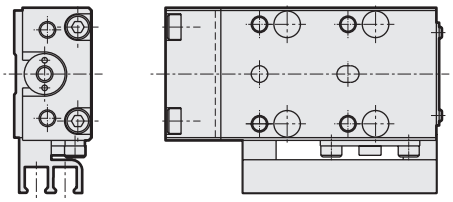

· Positioning pin (-J)

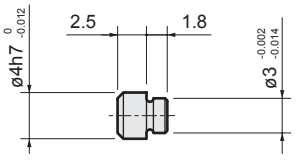

Stroke	A	B	C	D	E	F	G	H
5	49	16	16	30	16	29	40	35
10	49	16	16	30	16	29	40	35
15	59	26	26	40	26	39	50	45
20	59	26	26	40	26	39	50	45
30	69	36	36	50	36	49	60	55

Note : Refer to page 47 for switch mounting position dimensions.

LCM Series Common protruding dimensions with switch

● Lead wire hole on the rear side

·F*H

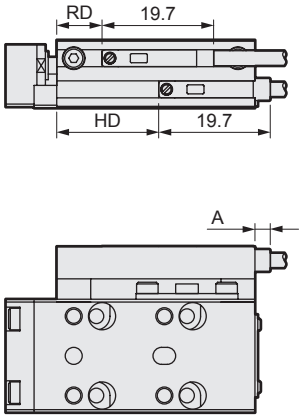

·F*V

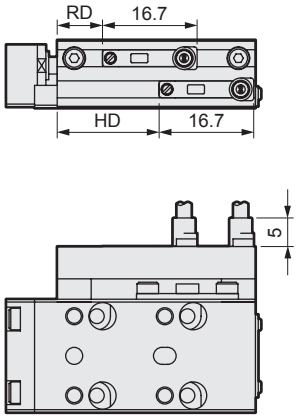

·F*S

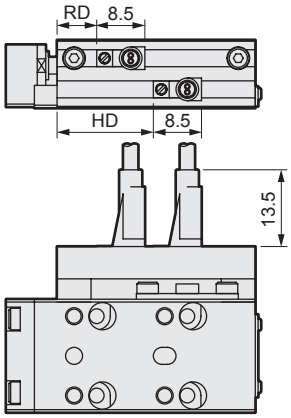

Bore size (mm)	Stroke	RD			HD			A	
		F*H	F*V	F*S	F*H	F*V	F*S	1-color LED	2-color LED
ø4.5	5	12	12	11	17	17	16	2.7	7.2
	10	7	7	6	17	17	16		
ø6	5	13	13	12	18	18	17		
	10	8	8	7	18	18	17		
	15	8	8	7	23	23	22		
	20	8	8	7	28	28	27		
	30	8	8	7	38	38	37		
ø8	5	13	13	12	18	18	17		
	10	8	8	7	18	18	17		
	15	13	13	12	28	28	27		
	20	8	8	7	28	28	27		
	30	8	8	7	38	38	37		

● Lead wire hole on the front side

·F*H

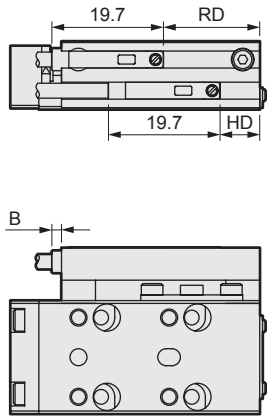

·F*V

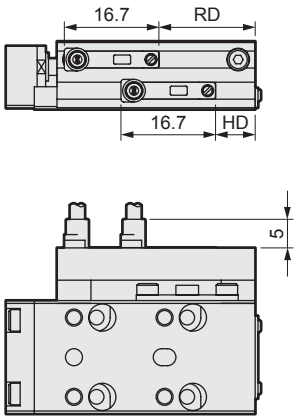

·F*S

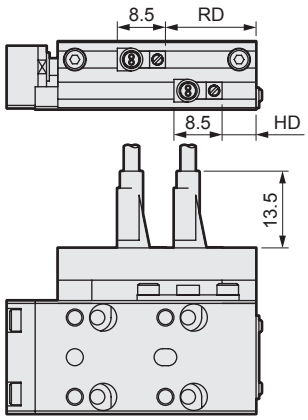

Bore size (mm)	Stroke	RD			HD			B	
		F*H	F*V	F*S	F*H	F*V	F*S	1-color LED	2-color LED
ø4.5	5	12	12	11	7	7	6	-	-
	10	17	17	16				1.7	6.2
ø6	5	12	12	11	7	7	6	-	-
	10	17	17	16				1.7	6.2
	15	22	22	21				1.7	6.2
	20	28	27	26				1.7	6.2
	30	37	37	36				1.7	6.2
ø8	5	12	12	11	7	7	6	-	-
	10	17	17	16				1.7	6.2
	15	22	22	21				-	-
	20	27	27	26				1.7	6.2
	30	37	37	36				1.7	6.2

LCM
LCR
LCG
LCW
LCX
STM
STG
STS/STL
STR2
UCA2
ULK*
JSK/M2
JSG
JSC3/JSC4
USSD
UFCD
USC
UB
JSB3
LMB
LML
HCM
HCA
LBC
CAC4
UCAC2
CAC-N
UCAC-N
RCS2
RCC2
PCC
SHC
MCP
GLC
MFC
BBS
RRC
GRC
RV3*
NHS
HRL
LN
Hand
Chuk
MecHnd/Chuk
ShkAbs
FJ
FK
SpdContr
Ending

STEP-1

Confirm that the load moment in the full stroke is within the allowable value in each direction.

· Direction of moment and length to the center of the guide (X)

Direction	Fig.	Formula
M1 moment	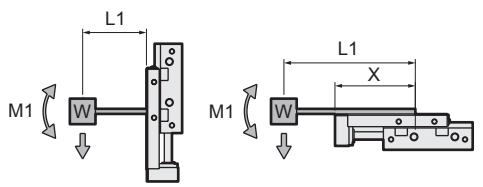	M1=L1xW
M2 moment	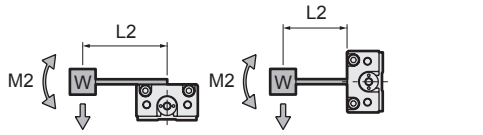	M2=L2xW
M3 moment	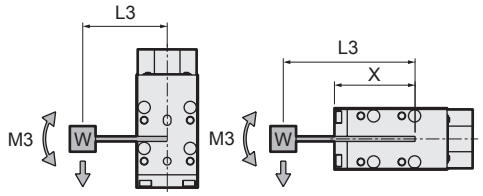	M3=L3xW

·Allowable moment

N·m

Model No.	M1	M2	M3
LCM-*-4.5	0.24	0.22	0.29
LCM-*-6	0.28	0.23	0.34
LCM-*-8	0.28	0.38	0.34

· Length to the center of the guide (X)

mm

Model No.	Stroke	X		
		Standard	With buffer	Clean specs.
LCM-*-4.5	5	30	40	35
	10			
LCM-*-6	5	31.5	41.5	36.5
	10			
	15	36.5	46.5	41.5
	20	41.5	51.5	46.5
	30	51.5	61.5	56.5
LCM-*-8	5	31.5	41.5	36.5
	10			
	15	41.5	51.5	46.5
	20			
	30	51.5	61.5	56.5

* Note that if a workpiece makes contact at a point off the guide during the stroke, the thrust will cause a large moment.

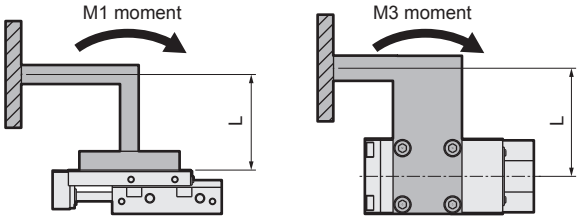

STEP-2

Confirm that the kinetic energy obtained from the load weight of the cylinder and the piston speed is within the allowable absorbed energy.

Bore size	ø4.5	ø6	ø8
Allowable absorbed energy J	1.59×10^{-3}	2.83×10^{-3}	5.02×10^{-3}

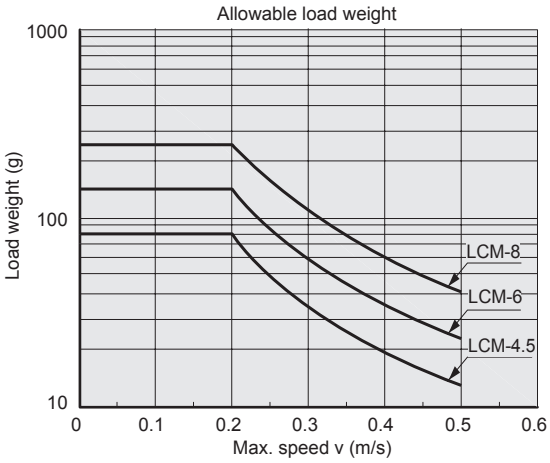

Technical data

■ Accuracy of the slide table

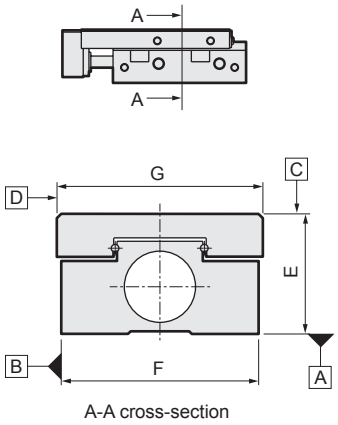

mm

Item		LCM-*-4.5 to 8
Parallelism	C-plane against A-plane	0.03
	D-plane against B-plane	0.03
Parallelism during movement	C-plane against A-plane	0.005 Note
	D-plane against B-plane	0.005 Note
Tolerance of E		±0.05
Tolerance of F		±0.05
Tolerance of G		±0.05

Note : 0.006 in LCM-6, 8 with 30 mm stroke

■ Displacement angle of the slide table due to bending moment (reference value)

M1 Moment

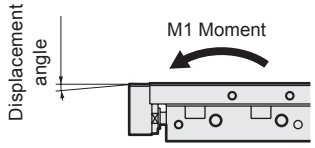

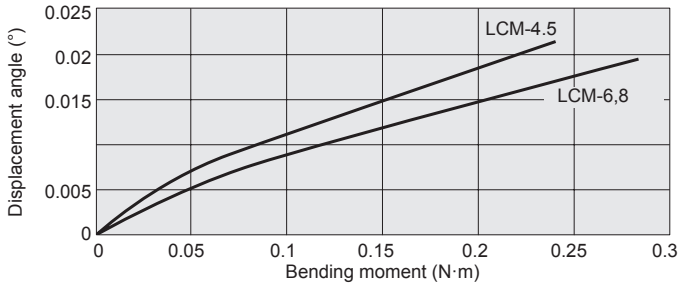

M2 Moment

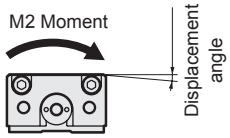

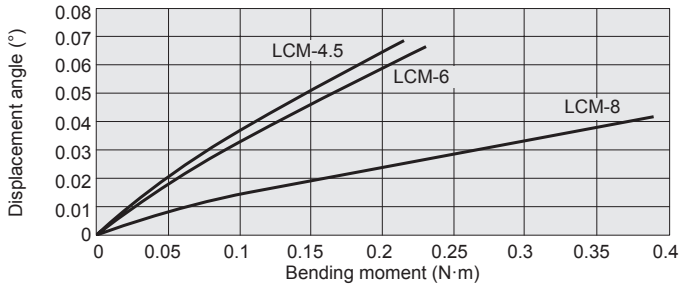

M3 Moment

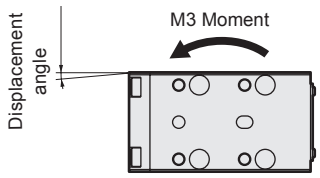

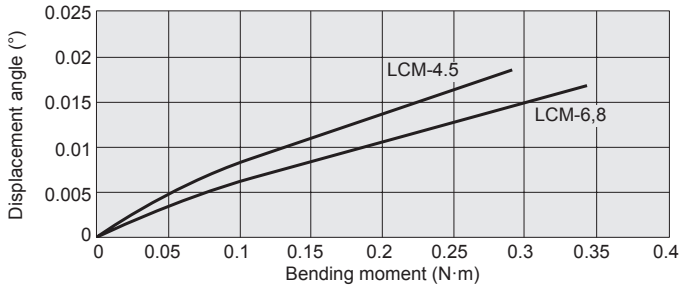

Pneumatic components

Safety Precautions

Be sure to read this section before use.
Refer to Intro Page 73 for general information of the cylinder, and to Intro Page 80 for general information of the cylinder switch.

Product-specific cautions: Linear slide cylinder LCM Series

Design/selection

1. Common

CAUTION

- When selecting a cylinder, follow the "LCM selection guide" on page 48.
- Protect the cylinder with a cover to prevent damage and malfunction in a place where it is exposed to dripping water or oil, corrosive conditions or much dust.
- The stainless steel body and slide table may rust in some environments. Apply an appropriate amount of rust preventing agent periodically.
- Switches may accidentally function near a magnetic field. A magnetic substance near the switch may also cause accidental operation. When setting a magnetic workpiece on the slide table, adjust the size so that it does not protrude toward the switch across the table end.
- Putting a strong magnet close to the product may cause magnetization of the product, which may result in accidental operation of the switch.
- Use the cylinder within the allowable absorbed energy in the table below. If kinetic energy exceeds these values, consider using a separate shock absorber.

Bore size	ø4.5	ø6	ø8
Allowable absorbed energy J	1.59×10^{-3}	2.83×10^{-3}	5.02×10^{-3}

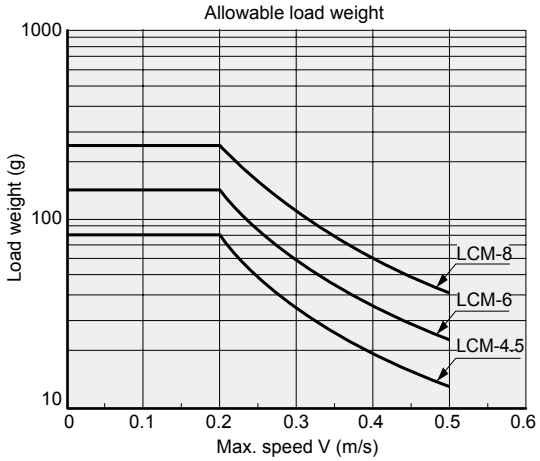

Mounting, installation and adjustment

1. Common; when piping

- Apply adhesive to the M3 plug (hexagon socket set screw) when changing the piping port position. (Low strength adhesives such as LOCTITE 222/221 or ThreeBond 1344 are recommended) Tighten the plug up to a halfway point so that the screw does not protrude from the port surface and does not reach the bottom of the port.
- As compatible fittings are limited, refer to the table below to select a fitting.

Recommended fittings

Bore size	Recommended fittings
All bore sizes	PG-S2-M3
	PG-S2-M3-S
	PG-L2-M3
	FTS4-M3
	FTL4-M3

Note : FTL4-M3 is not available for ø4.5 clean-room specifications dust collection port.
Refer to "Fiber tube for push-in fitting No.CC-784A".

- Do not damage the surface flatness by denting or scratching the body mounting surface or the slide table surface. Make sure that the flatness of the mating surface for mounting is 0.02 mm or less. Poor flatness may result in lower performance of the guide, higher rolling resistance or shorter service life.
- Use a clearance-fit stepped pin (option) for positioning. If a press-fit pin is used, the load of press fitting may damage the guide and result in failure. Also, if the pin is not stepped, it will interfere with the body since the pin hole is through, which may result in failure.
- The slide table and end plate are supported by balls. When fixing a jig with bolts, be sure to hold the slide table and end plate while tightening. If the body is held, a large moment will be applied to the guide, resulting in low accuracy of the guide.

Mounting, installation and adjustment

■ Observe the following bolt insertion lengths and tightening torque when installing the jig on the body, slide table or end plate.

● Mounting body (side installation)

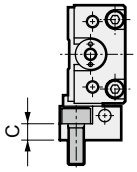

Note: Do not use a washer, etc. Otherwise the mounting bolt will contact the guide, resulting in damage.

Model No.	Bolt used	Max. tightening torque N·m	C mm
LCM-A-4.5	M3×0.5	1.14	5
LCM-A-6	M3×0.5	1.14	5
LCM-A-8	M4×0.7	2.7	4

● Mounting body

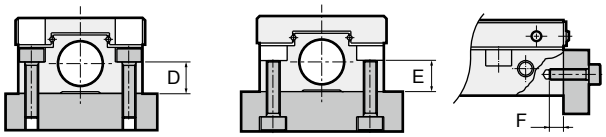

Model No.	Bolt used	Max. tightening torque N·m	D mm
LCM-*-4.5	M2×0.4	0.32	3.5
LCM-*-6	M2.5×0.45	0.65	5
LCM-*-8	M2.5×0.45	0.65	5.5

Model No.	Bolt used	Max. tightening torque N·m	E mm
LCM-*-4.5	M2.5×0.45	0.65	3.5
LCM-*-6	M3×0.5	1.14	5
LCM-*-8	M3×0.5	1.14	5.5

Model No.	Bolt used	Max. tightening torque N·m	Max. insertion depth F mm
LCM-*-4.5	M2×0.4	0.32	2.5
LCM-*-6	M2.5×0.45	0.65	2.5
LCM-*-8	M3×0.5	1.14	3

● Attaching a jig

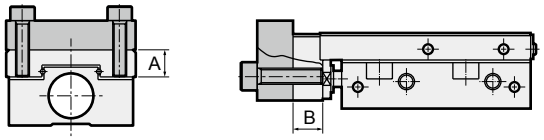

Model No.	Bolt used	Max. tightening torque N·m	Max. insertion depth A mm	Max. insertion depth B mm
LCM-*-4.5	M3×0.5	0.63	4	4.5
LCM-*-6	M3×0.5	0.63	4	5.5
LCM-*-8	M3×0.5	0.63	5	5.5

Note : Keep the length of the bolt for mounting a workpiece within the max. screw insertion depth. Otherwise it may contact and damage the body.

■ This series can be modified to the type with switch. Also, the switch mounting surface can be changed. Observe the following tightening torque of bolts for fixing the switch rail. Note that the port on the switch mounting surface is not used and should be plugged before the switch rail is installed.

Model No.	Bolt used	Max. tightening torque N·m
LCM-*-4.5	M2×0.4	0.17
LCM-*-6	M2×0.4	0.17
LCM-*-8	M2×0.4	0.17

■ The cylinder switch may malfunction if there is a magnetic substance such as a metal plate installed adjacently. Confirm that a distance of at least 3 mm is allocated from the surface of the switch rails. (Same for all bore sizes)

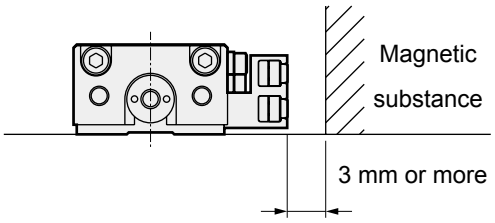

■ The cylinder switches may accidentally function if the cylinders are close to each other. Keep A, B, C and D 3 mm and over. (Same for all bore sizes)

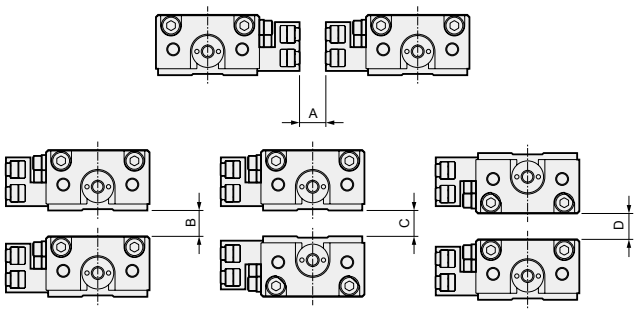

LCM
LCR
LCG
LCW
LCX
STM
STG
STS/STL
STR2
UCA2
ULK*
JSK/M2
JSG
JSC3/JSC4
USSD
UFCD
USC
UB
JSB3
LMB
LML
HCM
HCA
LBC
CAC4
UCAC2
CAC-N
UCAC-N
RCS2
RCC2
PCC
SHC
MCP
GLC
MFC
BBS
RRC
GRC
RV3*
NHS
HRL
LN
Hand
Chuk
MecHnd/Chuk
ShkAbs
FJ
FK
SpdContr
Ending

Mounting, installation and adjustment

2. Side mounting

⚠ CAUTION

■ Keep the installation intervals within the value in the table below when installing the side mounting cylinders side by side.

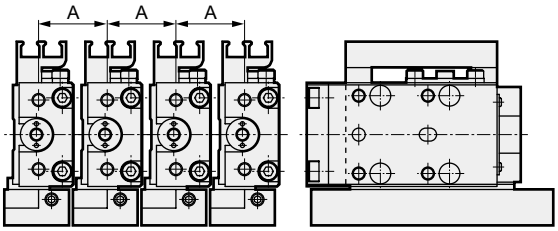

Model No.	A mm
LCM-A-4.5	12
LCM-A-6	14
LCM-A-8	16

3. With buffer

■ The type with buffer cannot be used vertically upward.

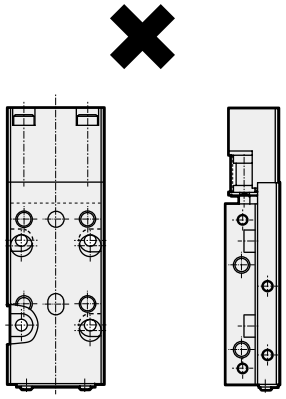

Use/maintenance

⚠ CAUTION

■ Apply CGL grease (IKO) to the guide rail after six months or when the number of operation cycles reaches three million, whichever comes first.

■ This cylinder is a non-disassembly. Do not disassemble forcibly.

LCR

Linear slide cylinder

ø6/ø8/ø12/ø16/ø20/ø25

Overview

Symmetrical structure that is drastically lighter and with increased flexibility in design. Cylinder with highly rigid linear guide with a wide variety of options and variations.

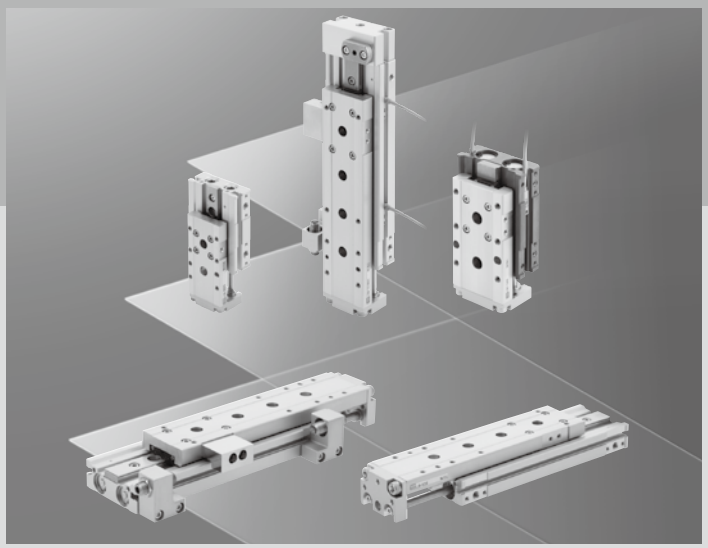

CONTENTS

Product introduction 54
Series variation 56

- Double acting/single rod (LCR) 58
- Double acting/position locking (LCR-Q) 84
- Double acting/single rod clean-room specifications (LCR-P7*) 94
- Double acting/fine speed (LCR-F) 112
- Double acting/fine speed clean-room specifications (LCR-F-P7*) 118

Selection guide 122
Technical data 127
⚠ Safety precautions 130

LCR :Renewal Series

Linear slide cylinder

Extremely lightweight. LCR :Reduce Weight

Pared down to as much as
10% lighter than the conventional model.

- Compared to the conventional model: Max 10% lighter!!

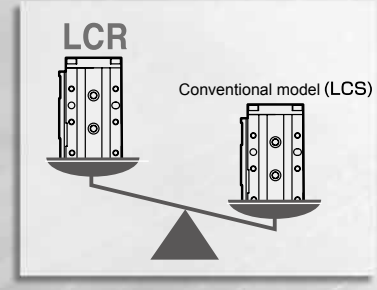

- Applications
  Works perfectly on the Z-axis.

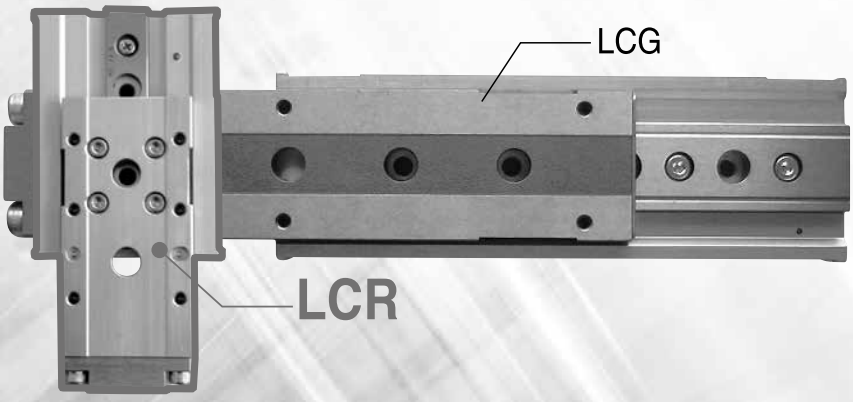

The moving part becomes lighter
and thus enables efficient, energy-saving compact equipment.

Increased rigidity. LCR :Rigidity

The highly rigid linear guide and slide table
surpass the conventional model (LCS) in rigidity!

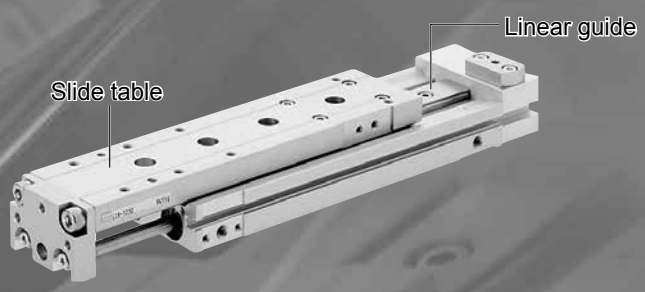

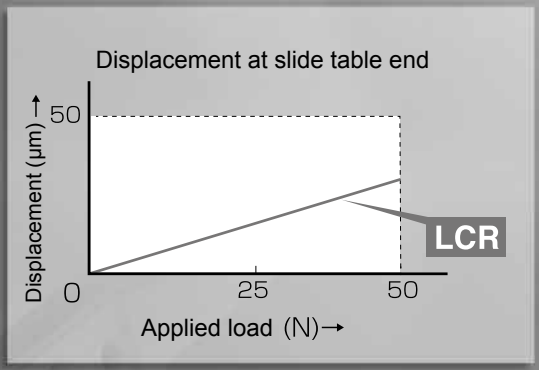

Flexible

Symmetrical structure
Available for a variety of applications

Increased flexibility in design

Designing is more flexible with the symmetrical stoppers, multi-side piping, two-side installation and availability of a positioning hole.

■ **Modification to the symmetrical configuration is possible**
⬅ shows the piping direction.

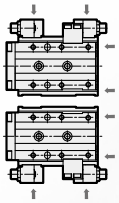

■ **Standard rear piping port (except for ø 6)**

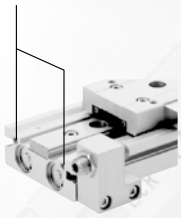

A wide variety of options and variations

The standard, position locking, clean room specifications and fine speed are available.
The options include a stroke adjusting stopper, shock absorber stopper and more.
* A shock absorber stopper cannot be used with the clean room specifications.

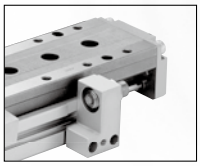

■ **Stroke adjusting stopper**
Adjusting range on one side: 0 to 5 mm

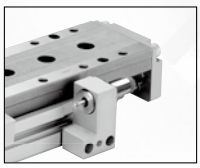

■ **Shock absorber stopper**
Reducing impact at the stroke end.

2-color display switch

A proximity 2-color display switch is available.
It does not protrude from the body and thus contributes to the simple appearance of the cylinder.

With buffer mechanism

If the driving section strikes against the workpiece when the cylinder is going forward, the buffer function is activated to protect the workpiece and cylinder.
Suitable for use at the end of a pick & place device and other applications requiring a buffer function. A cylinder switch mounted to detect buffer activation enables detection of abnormality of the line (BL).

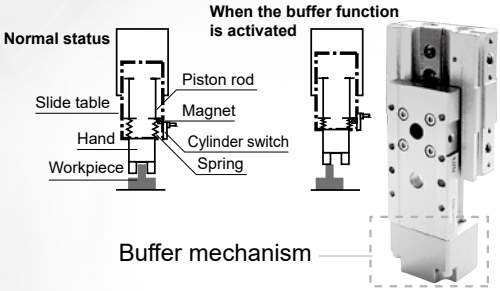

Buffer mechanism

■ **Mounting holes on two sides**

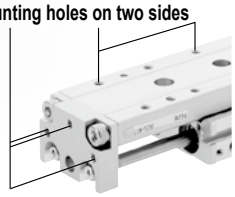

■ LCR product variations

● Option

Model variations	Bore size	Stroke length (mm) 10	20	30	40	50	75	100	125	150	Stroke adjusting stopper S*	Shock absorber stopper A*	With buffer B*	Switch
Double acting/single rod **LCR**	ø 6	○	○	○	○	○	○				○	○	○	○
	ø 8	○	○	○	○	○	○				○	○	○	○
	ø 12	○	○	○	○	○	○	○			○	○	○	○
	ø 16	○	○	○	○	○	○	○	○		○	○	○	○
	ø 20/ø 25	○	○	○	○	○	○	○	○	○	○	○	○	○
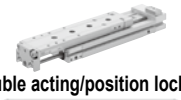 Double acting/position locking **LCR-Q**	ø 8	○	○	○	○	○	○				○	○	○	○
	ø 12	○	○	○	○	○	○	○			○	○	○	○
	ø 16	○	○	○	○	○	○	○	○		○	○	○	○
	ø 20/ø 25	○	○	○	○	○	○	○	○	○	○	○	○	○
Double acting/single rod (clean room specifications) **LCR-P7***	ø 6	○	○	○	○	○					○			○
	ø 8	○	○	○	○	○	○				○			○
	ø 12	○	○	○	○	○	○	○			○			○
	ø 16	○	○	○	○	○	○	○	○		○			○
	ø 20/ø 25	○	○	○	○	○	○	○	○	○	○			○
Double acting/fine speed **LCR-F**	ø 12	○	○	○	○	○	○	○			○			○
	ø 16	○	○	○	○	○	○	○	○		○			○
	ø 20/ø 25	○	○	○	○	○	○	○	○	○	○			○
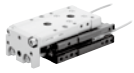 Double acting/fine speed (clean room specifications) **LCR-F-P7***	ø 12	○	○	○	○	○	○	○			○			○
	ø 16	○	○	○	○	○	○	○	○		○			○
	ø 20/ø 25	○	○	○	○	○	○	○	○	○	○			○

Series variation

Linear slide cylinder LCR Series

Variation	Model No. JIS symbol	Bore size (mm)	Stroke length (mm) 10	20	30	40	50	75	100	125	150
Double acting/ single rod	LCR 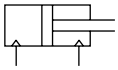	ø6	●	●	●	●	●				
		ø8	●	●	●	●	●	●			
		ø12	●	●	●	●	●	●	●		
		ø16	●	●	●	●	●	●	●	●	
		ø20/ø25	●	●	●	●	●	●	●	●	●
Double acting/ position locking	LCR-Q 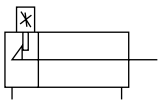	ø8	●	●	●	●	●	●			
		ø12	●	●	●	●	●	●	●		
		ø16	●	●	●	●	●	●	●	●	
		ø20/ø25	●	●	●	●	●	●	●	●	●
Double acting/ single rod clean-room specifications	LCR-P7* 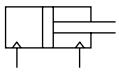	ø6	●	●	●	●	●				
		ø8	●	●	●	●	●	●			
		ø12	●	●	●	●	●	●	●		
		ø16	●	●	●	●	●	●	●	●	
		ø20/ø25	●	●	●	●	●	●	●	●	●
Double acting/ fine speed	LCR-F 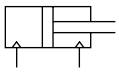	ø12	●	●	●	●	●	●	●		
		ø16	●	●	●	●	●	●	●	●	
		ø20/ø25	●	●	●	●	●	●	●	●	●
Double acting/ fine speed clean-room specifications	LCR-F-P7* 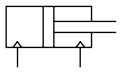	ø12	●	●	●	●	●	●	●		
		ø16	●	●	●	●	●	●	●	●	
		ø20/ø25	●	●	●	●	●	●	●	●	●

LCM
LCR
LCG
LCW
LCX
STM
STG
STS/STL
STR2
UCA2
ULK*
JSK/M2
JSG
JSC3/JSC4
USSD
UFCD
USC
UB
JSB3
LMB
LML
HCM
HCA
LBC
CAC4
UCAC2
CAC-N
UCAC-N
RCS2
RCC2
PCC
SHC
MCP
GLC
MFC
BBS
RRC
GRC
RV3*
NHS
HRL
LN
Hand
Chuk
MecHnd/Chuk
ShkAbs
FJ
FK
SpdContr
Ending

●: Standard, ◎: Option, ○: Made to order, : Not available

	Option																										
	Stroke adjusting stopper						Shock absorber stopper						Two-sided combined double stopper						One side hybrid stopper mix				With buffer				
	Stopper position ①	Stopper position ②	Stopper position ③	Stopper position ④	Stopper position ①/③	Stopper position ②/④	Stopper position ①	Stopper position ②	Stopper position ③	Stopper position ④	Stopper position ①/③	Stopper position ②/④	A1 + metal stopper	A2 + metal stopper	A3 + metal stopper	A4 + metal stopper	A5 + metal stopper	A6 + metal stopper	A1 + S3	A2 + S4	A3 + S1	A4 + S2	Without switch groove	With switch groove	Plug attached	Switch	Page
	S1	S2	S3	S4	S5	S6	A1	A2	A3	A4	A5	A6	W1	W2	W3	W4	W5	W6	C1	C2	C3	C4	B	BL	N		
	◎	◎	◎	◎	◎	◎	◎	◎	◎	◎	◎	◎	○	○	○	○	○	○	○	○	○	○	◎	◎	◎	◎	58
	◎	◎					◎	◎					○	○									○	○		◎	84
	◎	◎	◎	◎	◎	◎																			◎	◎	94
	◎	◎	◎	◎	◎	◎	◎	◎	◎	◎	◎	◎	○	○	○	○	○	○	○	○	○	○			◎	◎	112
	◎	◎	◎	◎	◎	◎																			◎	◎	118

● Stopper position

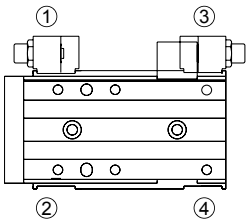

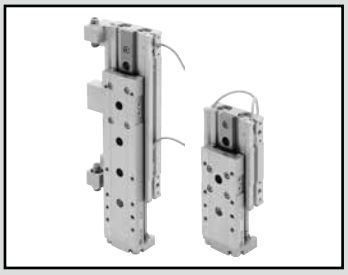

Linear slide cylinder Double acting/single rod

LCR Series

● Bore size: ø6/ø8/ø12/ø16/ø20/ø25

JIS symbol

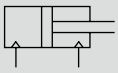

Specifications

Item		LCR					
Bore size mm		ø6	ø8	ø12	ø16	ø20	ø25
Actuation		Double acting					
Working fluid		Compressed air					
Max. working pressure MPa		0.7 (≈100 psi, 7 bar)					
Min. working pressure MPa		0.15 (≈22 psi, 1.5 bar) (*1)					
Proof pressure MPa		1.05 (≈150 psi, 10.5 bar)					
Ambient temperature °C		-10 (14°F) to 60 (140°F) (no freezing)					
Port size	Main body side	M3	M5			Rc1/8	
	Main body back	-	M3			M5	Rc1/8
Stroke tolerance mm		$^{+2.0}_{0}$ (*2)					
Working piston speed mm/s		50 to 500 (*3)					
Cushion		With rubber cushion					
Lubrication		Not required (use turbine oil class 1 ISO VG32 if necessary for lubrication)					
Allowable absorbed energy J		Refer to Table 3 on page 122.					

*1: 0.2 MPa when using ø6 shock absorber stopper.
*2: Note that there will be a slight gap between the end plate and floating bush if no stopper is attached.
*3: Keep within 50 to 200 mm/s when using a stroke adjusting stopper.
*4: The stroke adjusting stopper for 0.3 MPa and over working pressure is the metal sealing.

Stroke length

Bore size (mm)	Standard stroke length (mm)
ø6	10, 20, 30, 40, 50
ø8	10, 20, 30, 40, 50, 75
ø12	10, 20, 30, 40, 50, 75, 100
ø16	10, 20, 30, 40, 50, 75, 100, 125
ø20	10, 20, 30, 40, 50, 75, 100, 125, 150
ø25	10, 20, 30, 40, 50, 75, 100, 125, 150

Note: Products with stroke lengths other than the above are not available.

With buffer specifications

Specifications other than the below are same as the above common specifications.

Item		Description					
Bore size mm		ø6	ø8	ø12	ø16	ø20	ø25
Buffer stroke length mm		4		9		10	
Buffer part spring load	Set N	3	5	10	13	17	21
	Operating N	7	8	14	20	25	29

*1: In the type with buffer, adjusting the rod side stroke length will shorten the buffer stroke length and increase the spring load when set.
*2: Keep the buffer stroke length less than the stroke length above. Otherwise, malfunctions or damage may result.

Theoretical thrust table

Refer to page 123.

LCM
LCR
LCG
LCW
LCX
STM
STG
STS/STL
STR2
UCA2
ULK*
JSK/M2
JSG
JSC3/JSC4
USSD
UFCD
USC
UB
JSB3
LMB
LML
HCM
HCA
LBC
CAC4
UCAC2
CAC-N
UCAC-N
RCS2
RCC2
PCC
SHC
MCP
GLC
MFC
BBS
RRC
GRC
RV3*
NHS
HRL
LN
Hand
Chuk
MecHnd/Chuk
ShkAbs
FJ
FK
SpdContr
Ending

Switch specifications

● 1-color/2-color display

Item	Reed 2-wire				Proximity 2-wire		Proximity 3-wire		
	T0H/T0V		T5H/T5V		T2H/T2V	T2WH/ T2WV	T3H/ T3V	T3PH/ T3PV	T3WH/ T3WV
Applications	For programmable controller, relay		For programmable controller, relay, IC circuit (without indicator lamp), serial connection		Dedicated for programmable controller		For programmable controller, relay		
Output method	-		-		-		NPN output	PNP output	NPN output
Power supply voltage	-		-		-		10 to 28 VDC		
Load voltage	12/24 VDC	110 VAC	5/12/24 VDC	110 VAC	10 to 30 VDC	24 VDC ±10%	30 VDC or less		
Load current	5 to 50 mA	7 to 20 mA	50 mA or less	20 mA or less	5 to 20 mA		100 mA or less		50 mA or less
Indicator lamp	LED (Lit when ON)		Without indicator lamp		LED (Lit when ON)	Red/green LED (Lit when ON)	LED (Lit when ON)	Yellow LED (Lit when ON)	Red/green LED (Lit when ON)
Leakage current	0 mA				1 mA or less		10 μA or less		
Weight g	1 m:18 3 m:49 5 m:80								

Item	Proximity 2-wire	Proximity 3-wire	Proximity 2-wire		Proximity 3-wire		
	F2S	F3S	F2H/F2V	F2YH/ F2YV	F3H/F3V	F3PH/F3PV (Made to order)	F3YH/ F3YV
Applications	Dedicated for programmable controller	For programmable controller, relay	Dedicated for programmable controller		For programmable controller, relay		
Output method	-	NPN output	-		NPN output	PNP output	NPN output
Power supply voltage	-	10 to 28 VDC	-		10 to 28 VDC	4.5 to 28 VDC	10 to 28 VDC
Load voltage	10 to 30 VDC	30 VDC or less	10 to 30 VDC	24 VDC ±10%	30 VDC or less		
Load current	5 to 20 mA	50 mA or less	5 to 20 mA		50 mA or less		
Indicator lamp	LED (Lit when ON)		Yellow LED (Lit when ON)	Red/green LED (Lit when ON)	Yellow LED (Lit when ON)		Red/green LED (Lit when ON)
Leakage current	1 mA or less	10 μA or less	1 mA or less		10 μA or less		
Weight g	1 m:10 3 m:29						

*1 : Refer to Ending Page 1 for detailed switch specifications and dimensions.
*2 : Switches other than the above models, such as switches with connectors, are also available. Refer to Ending Page 1.
*3 : The max. load current is 20 mA at 25°C. The current is lower than 20 mA if the operating ambient temperature around the switch is higher than 25°C. (5 to 10 mA at 60°C)
*4 : The F type switch uses a bend-resistant lead wire.

Cylinder weight

● Basic (Unit: g)

Bore size (mm)	Basic Stroke length (mm)								
	10	20	30	40	50	75	100	125	150
ø6	110	110	130	160	180	-	-	-	-
ø8	160	160	180	230	260	320	-	-	-
ø12	310	320	320	360	390	520	610	-	-
ø16	490	500	500	550	610	840	970	1,110	-
ø20	900	910	920	1,000	1,090	1,390	1,600	1,810	2,020
ø25	1,620	1,640	1,650	1,760	1,860	2,350	2,620	2,890	3,160

● Additional weight of options (Unit: g)

Bore size (mm)	Option/stopper code				With buffer
	S1 to S4	S5/S6	A1 to A4	A5/A6	B/BL
ø6	30	40	40	50	40
ø8	40	60	50	70	40
ø12	70	100	80	110	70
ø16	110	150	120	160	80
ø20	170	250	180	270	150
ø25	290	380	300	400	320

Specifications for rechargeable battery

(Catalog No. CC-1226A)

LCR - ··· - P4*

● Design compatible with rechargeable battery manufacturing process.

* Contact CKD for details.

LCM
LCR
LCG
LCW
LCX
STM
STG
STS/STL
STR2
UCA2
ULK*
JSK/M2
JSG
JSC3/JSC4
USSD
UFCD
USC
UB
JSB3
LMB
LML
HCM
HCA
LBC
CAC4
UCAC2
CAC-N
UCAC-N
RCS2
RCC2
PCC
SHC
MCP
GLC
MFC
BBS
RRC
GRC
RV3*
NHS
HRL
LN
Hand
Chuk
MecHnd/Chuk
ShkAbs
FJ
FK
SpdContr
Ending

How to order

Without switch (built-in magnet for switch)

LCR - 8 - 40 ——— S506 DTBLN

With switch (built-in magnet for switch)

LCR - 12 - 40 - F2H* - R - S506 DTBLN

Model No.

Ⓐ Bore size

Ⓑ Stroke length

Ⓒ Switch model No.

Ⓓ Switch quantity

Ⓔ Stopper

Ⓕ Option

⚠ Precautions for model No. selection

*1 : For the adjustable stroke range with a shock absorber stopper, refer to the stopper dimensions table on page 82.
*2 : For the port position, refer to the stopper dimensions on page 82.
*3 : The port positions of the standard without stopper are ① and ③ in the figure below.
4 : Refer to stoppers "C" and "W*" for combination of the stroke adjusting stopper and shock absorber stopper.
*5 : Can be selected for the type with stopper only.
*6 : A switch for buffer should be purchased separately. Refer to how to order a switch on page 64.
*7 : Refer to the selection table on page 63 for combinations of options.
*8 : A1**, A2**, A5** and A6** of ø6 to ø8 with 10 mm stroke length or less and ø12 to ø25 with 20 mm stroke length or less are made to order since adjustment is not possible with the standard stopper.
*9 : When two switches are necessary for the type with S*** or A***of ø6 to ø8 with 30 mm stroke length or less, select the F □ H type switch.
*10 : Select when using rear piping.
*11 : Can be selected only when using stroke adjusting stopper (S) and one side mixed type (C).
*12 : When two switches are necessary or a switch is installed on the head side of W3 to 6 (two-sided combined stopper) of ø6 (all stroke lengths), ø8 with 20 or 30 mm stroke length, ø12 with 30 to 50 mm stroke length or ø16 with 30 to 50 mm stroke length, select the axial lead wire.
*13 : Cannot be selected when choosing two-sided combined (W).
*14 : The adjustable stroke range when choosing two-sided combined (W) is ø6: 9 mm, ø8: 13.5 mm, ø12: 14.5 mm, ø16: 15 mm, ø20: 13 mm, ø25: 10 mm.
*15 : The stroke adjusting stopper for 0.3 MPa and over working pressure is the metal sealing.

[Example of model No.]

LCR-12-40-F2H-R-A1DT

Model: Linear slide cylinder double acting/single rod LCR

Ⓐ Bore size : ø12
Ⓑ Stroke length : 40 mm
Ⓒ Switch model No. : Proximity/2-wire
Axial lead wire
Ⓓ Switch quantity : 1 on rod side
Ⓔ Stopper : Shock absorber stopper
Stopper position ①
Ⓕ Option : With side and bottom ports
Material, steel (nitriding)

● Stopper position

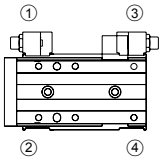

Code	Description
Ⓐ Bore size	
6	ø6
8	ø8
12	ø12
16	ø16
20	ø20
25	ø25

Ⓑ Stroke length (mm)

		Bore size (ø)					
		6	8	12	16	20	25
10	10	●	●	●	●	●	●
20	20	●	●	●	●	●	●
30	30	●	●	●	●	●	●
40	40	●	●	●	●	●	●
50	50	●	●	●	●	●	●
75	75		●	●	●	●	●
100	100			●	●	●	●
125	125				●	●	●
150	150					●	●

Ⓒ Switch model No.

Axial lead wire	Radial lead wire	Contact	Voltage AC	Voltage DC	Indicator lamp	Lead wire	Bore size ø6	ø8	ø12	ø16	ø20	ø25
-	F2S*	Proximity		●	1-color display	2-wire	●	●	●			
-	F3S*	Proximity		●	1-color display	3-wire	●	●	●			
F2H*	F2V*	Proximity		●	1-color display	2-wire	●	●	●			
F3H*	F3V*	Proximity		●	1-color display	3-wire	●	●	●			
F3PH*	F3PV*	Proximity		●	1 color display (PNP output) (made to order)	3-wire	●	●	●			
F2YH*	F2YV*	Proximity		●	2-color display	2-wire	●	●	●			
F3YH*	F3YV*	Proximity		●	2-color display	3-wire	●	●	●			
T0H*	T0V*	Reed	●	●	1-color display no indicator lamp	2-wire				●	●	●
T5H*	T5V*	Reed	●	●	1-color display no indicator lamp	2-wire				●	●	●
T2H*	T2V*	Proximity		●	1-color display	2-wire				●	●	●
T3H*	T3V*	Proximity		●	1-color display	3-wire				●	●	●
T3PH*	T3PV*	Proximity		●	1-color display (PNP output)	3-wire				●	●	●
T2WH*	T2WV*	Proximity		●	2-color display	2-wire				●	●	●
T3WH*	T3WV*	Proximity		●	2-color display	3-wire				●	●	●

*** Lead wire length**

Blank	1 m (standard)			●			
3	3 m (option)			●			
5	5 m (option)					●	

Ⓓ Switch quantity

R	1 on rod side
H	1 on head side
D	2

Ⓔ Stopper

Refer to "Stopper" on page 61.

Ⓕ Option

Blank	Port on the stopper: without port	
D	Port on the stopper: side and bottom ports	*2, *5, *13
Blank	Stopper block material: steel	
T	Stopper block material: steel (nitriding)	*5
B With buffer		*6, *7
B	Without switch groove	
BL	With switch groove	
Plug attached		
Blank	None	
N	With side piping port plug (not available for ø6, ø25)	*10

[Ⓔ Stopper]

Code	Description	
Ⓔ Stopper		
Blank	No option	
S Stroke adjusting stopper		***4/*7**
S1**	Stopper position ① (can be changed to ④)	Stopper Installation position
S2**	Stopper position ② (can be changed to ③)	
S3**	Stopper position ③ (can be changed to ②) *16	
S4**	Stopper position ④ (can be changed to ①) *16	
S5**	Stopper position ①, ③	
S6**	Stopper position ②, ④	
A Shock absorber stopper		***1/*4/*7**
A1	Stopper position ① (can be changed to ④)	Stopper Installation position
A2	Stopper position ② (can be changed to ③)	
A3	Stopper position ③ (can be changed to ②) *16	
A4	Stopper position ④ (can be changed to ①) *16	
A5	Stopper position ①, ③	
A6	Stopper position ②, ④	
W Two-sided combined double stopper (shock absorber stopper, metal stopper)		***12/*14**
W1	A1 + metal stopper	Stopper Installation position
W2	A2 + metal stopper	
W3	A3 + metal stopper	
W4	A4 + metal stopper	
W5	A5 + metal stopper	
W6	A6 + metal stopper	

Code	Description	
C One side hybrid stopper mix (shock absorber stopper, stroke adjusting stopper)		
C1**	A1+S3	Stopper Installation position
C2**	A2+S4	
C3**	A3+S1	
C4**	A4+S2	

**** part Adjustable stroke range ● Compatible with all. ▲ Compatible with some. *11**

	Protruding end	Return end	Stopper model No. S	A	W	C
Blank	5 mm or none	5 mm or none	●	-	-	●
02	15 mm or none	15 mm or none	●			●
03	25 mm or none	25 mm or none	●			●
04	15 mm	5 mm	▲			-
05	25 mm	5 mm	▲			-
06	5 mm	15 mm	▲			-
07	5 mm	25 mm	▲			-

*16: When changing the stopper position from the head side to the rod side, the stopper must be purchased separately according to the stroke length and adjustable stroke length. Refer to "Precautions when purchasing discrete stopper" on page 65. A1, A2 and adjustable stroke length of 15 mm and 25 mm may not be available depending on the stroke length.

Stopper model No. selection method

1 Stopper combination table

Model No.-[① Stopper] [② Stopper position] [③] Example) LCR-8-40-[S] [5]06

Stopper position model No. [②]	Stroke adjustable (one side) [S]	Shock absorber (one side) [A]	Two-sided combined double stopper [W]	One side hybrid stopper mix [C]
[1]	[S1] 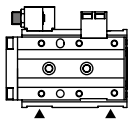	[A1] 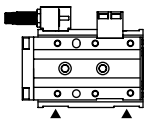	[W1] 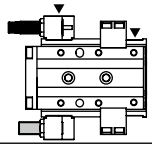	[C1] 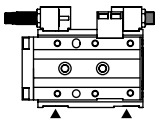
[2]	[S2] 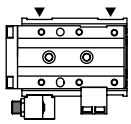	[A2] 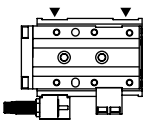	[W2] 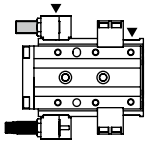	[C2] 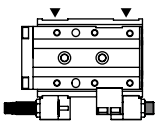
[3]	[S3] 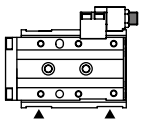	[A3] 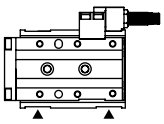	[W3] 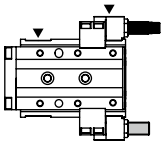	[C3] 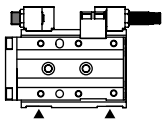
[4]	[S4] 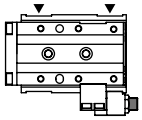	[A4] 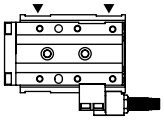	[W4] 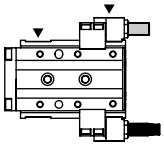	[C4] 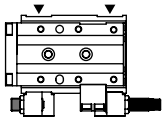
[5]	[S5] 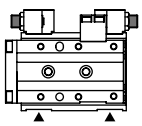	[A5] 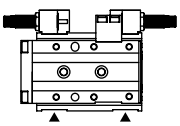	[W5] 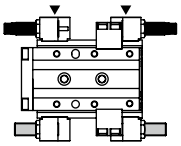	
[6]	[S6] 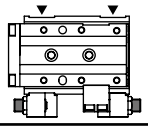	[A6] 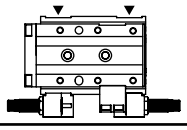	[W6] 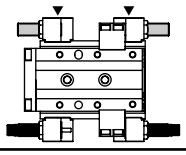	

▲ shows the piping direction.
If two-sided combined (W) is selected, the stopper bracket comes with piping on both sides, ▲ (piping direction) and the reverse side stopper bracket comes with a plug.

■: Shock absorber stopper
■: Stroke adjusting stopper (adjusting range 5 mm)
■: Metal adjusting stopper (adjusting range 15 mm)

LCM
LCR
LCG
LCW
LCX
STM
STG
STS/STL
STR2
UCA2
ULK*
JSK/M2
JSG
JSC3/JSC4
USSD
UFCD
USC
UB
JSB3
LMB
LML
HCM
HCA
LBC
CAC4
UCAC2
CAC-N
UCAC-N
RCS2
RCC2
PCC
SHC
MCP
GLC
MFC
BBS
RRC
GRC
RV3*
NHS
HRL
LN
Hand
Chuk
MecHnd/Chuk
ShkAbs
FJ
FK
SpdContr
Ending

Stopper model No. selection method

2 Stopper combination table

Model No.-[①② Stopper] [③ Adjustable stroke range]

Example) LCR-8-40-S5[06]

For stroke adjusting stopper -S

: Stroke adjusting stopper (adjusting range 5 mm)
: Stroke adjusting stopper (adjusting range 15 mm)
: Stroke adjusting stopper (adjusting range 25 mm)

		Stopper adjusting range		Stopper model No. [①②]					
		Protruding end	Return end	[S1]	[S2]	[S3]	[S4]	[S5]	[S6]
Adjustable stroke range Model No. [③]	Blank	5 mm or none	5 mm or none	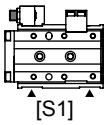 [S1]	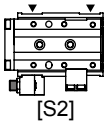 [S2]	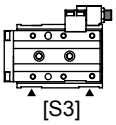 [S3]	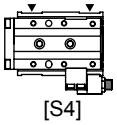 [S4]	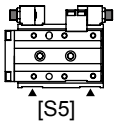 [S5]	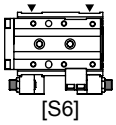 [S6]
	[02]	15 mm or none	15 mm or none	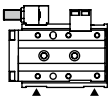 [S102]	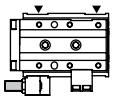 [S202]	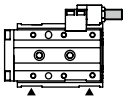 [S302]	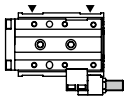 [S402]	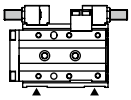 [S502]	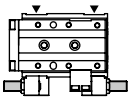 [S602]
	[03]	25 mm or none	25 mm or none	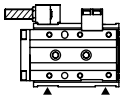 [S103]	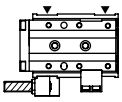 [S203]	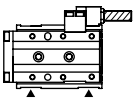 [S303]	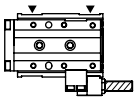 [S403]	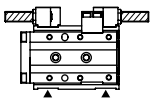 [S503]	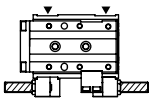 [S603]
	[04]	15 mm	5 mm					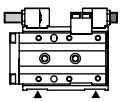 [S504]	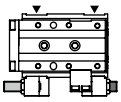 [S604]
	[05]	25 mm	5 mm					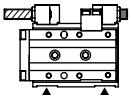 [S505]	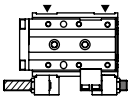 [S605]
	[06]	5 mm	15 mm					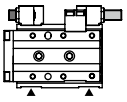 [S506]	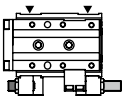 [S606]
	[07]	5 mm	25 mm					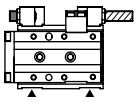 [S507]	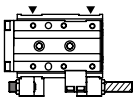 [S607]

▲ shows the piping direction.
Cannot be selected for shock absorber [A] and two-sided combined [W].

3 For one side hybrid stopper mix -C

: Shock absorber stopper
: Stroke adjusting stopper (adjusting range 5 mm)
: Stroke adjusting stopper (adjusting range 15 mm)
: Stroke adjusting stopper (adjusting range 25 mm)

		Stopper adjusting range		Stopper model No. [①②]			
		Protruding end	Return end	[C1]	[C2]	[C3]	[C4]
Adjustable stroke range Model No. [③]	Blank	5 mm or shock absorber	5 mm or shock absorber	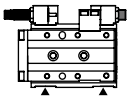 [C1]	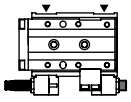 [C2]	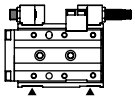 [C3]	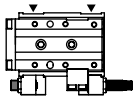 [C4]
	[02]	15 mm or shock absorber	15 mm or shock absorber	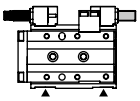 [C102]	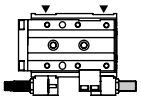 [C202]	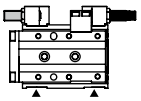 [C302]	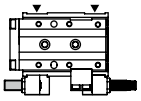 [C402]
	[03]	25 mm or shock absorber	25 mm or shock absorber	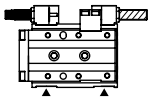 [C103]	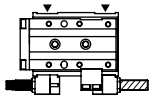 [C203]	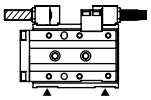 [C303]	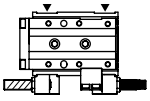 [C403]

▲ shows the piping direction.
For the adjustable stroke range with a shock absorber stopper, refer to the stopper dimensions table on page 82.

LCR Double acting/single rod selection table

(Combination with stroke adjusting stopper, shock absorber stopper)

●: Available — : Not available

Model No.	Stopper		Stroke adjustable																								
	Stopper code		S1			S2			S3			S4			S5						S6						
			Adjustment length code																								
	Bore size	Stroke mm	Blank	02	03	Blank	02	03	Blank	02	03	Blank	02	03	Blank	02	03	04	05	06	07	Blank	02	03	04	05	06	07
LCR	ø6,ø8	10	●	—	—	●	—	—	●	●	—	●	●	—	●	—	—	—	—	●	—	●	—	—	—	—	●	—
		20 or more	●	●	—	●	●	—	●	●	—	●	●	—	●	●	—	●	—	●	—	●	●	—	●	—	●	—
	ø12 to ø25	10	●	—	—	●	—	—	●	●	—	●	●	—	●	—	—	—	—	●	—	●	—	—	—	—	●	—
		20	●	●	—	●	●	—	●	●	●	●	●	●	●	●	—	●	—	●	●	●	●	—	●	—	●	●
		30 or more	●	●	●	●	●	●	●	●	●	●	●	●	●	●	●	●	●	●	●	●	●	●	●	●	●	●
LCR—B, BL	ø6,ø8	10	●	—	—	●	—	—	●	●	—	●	●	—	●	—	—	—	—	●	—	●	—	—	—	—	●	—
		20 or more	●	—	—	●	—	—	●	●	—	●	●	—	●	—	—	—	—	●	—	●	—	—	—	—	●	—
	ø12 to ø25	10	●	—	—	●	—	—	●	●	—	●	●	—	●	—	—	—	—	●	—	●	—	—	—	—	●	—
		20	●	●	—	●	●	—	●	●	●	●	●	●	●	●	—	●	—	●	●	●	●	—	●	—	●	●
		30 or more	●	●	—	●	●	—	●	●	●	●	●	●	●	●	—	●	—	●	●	●	●	—	●	—	●	●

Model No.	Stopper		Shock absorber						Two-sided combined double stopper						One side hybrid stopper mix											
	Stopper code		A1	A2	A3	A4	A5	A6	W1	W2	W3	W4	W5	W6	C1			C2			C3			C4		
															Adjustment length code											
	Bore size	Stroke mm													Blank	02	03	Blank	02	03	Blank	02	03	Blank	02	03
LCR	ø6,ø8	10	—	—	●	●	—	—	—	—	●	●	—	—	—	—	—	—	—	—	●	—	—	●	—	—
		20 or more	●	●	●	●	●	●	●	●	●	●	●	●	●	●	—	●	●	—	●	●	—	●	●	—
	ø12 to ø25	10	—	—	●	●	—	—	—	—	●	●	—	—	—	—	—	—	—	—	●	—	—	●	—	—
		20	—	—	●	●	—	—	—	—	●	●	—	—	—	—	—	—	—	—	●	●	—	●	●	—
		30 or more	●	●	●	●	●	●	●	●	●	●	●	●	●	●	●	●	●	●	●	●	●	●	●	●
LCR-B, BL	ø6,ø8	10	—	—	●	●	—	—	—	—	●	●	—	—	—	—	—	—	—	—	●	—	—	●	—	—
		20 or more	●	●	●	●	●	●	●	●	●	●	●	●	●	●	—	●	●	—	●	—	—	●	—	—
	ø12 to ø25	10	—	—	●	●	—	—	—	—	●	●	—	—	—	—	—	—	—	—	●	—	—	●	—	—
		20	—	—	●	●	—	—	—	—	●	●	—	—	—	—	—	—	—	—	●	●	—	●	●	—
		30 or more	●	●	●	●	●	●	●	●	●	●	●	●	●	●	●	●	●	●	●	●	—	●	●	—

The table above also applies to combinations with option code D (with port on stopper) or T (steel stopper block (nitriding)).

LCM
LCR
LCG
LCW
LCX
STM
STG
STS/STL
STR2
UCA2
ULK*
JSK/M2
JSG
JSC3/JSC4
USSD
UFCD
USC
UB
JSB3
LMB
LML
HCM
HCA
LBC
CAC4
UCAC2
CAC-N
UCAC-N
RCS2
RCC2
PCC
SHC
MCP
GLC
MFC
BBS
RRC
GRC
RV3*
NHS
HRL
LN
Hand
Chuk
MecHnd/Chuk
ShkAbs
FJ
FK
SpdContr
Ending

How to order switch

For ø6 to ø12

SW - F2H

Switch model No.
(Item Ⓒ on page 60)

For ø16 to ø25

SW - T2H3

Switch model No.
(Item Ⓒ on page 60)

● For buffer

SW - F 2 V 3

Output

Output	
2	DC 2-wire proximity
3	DC 3-wire proximity

Radial lead wire	

Lead wire length	
Blank	1 m (standard)
3	3 m (option)

How to order a stopper set

● Set of a stopper and stroke adjusting stopper or shock absorber stopper
● Use it when changing from the standard to the stroke adjusting stopper or shock absorber stopper.

LCR - 12 - S 2 D - S02

Bore size
(Item Ⓐ on page 60)

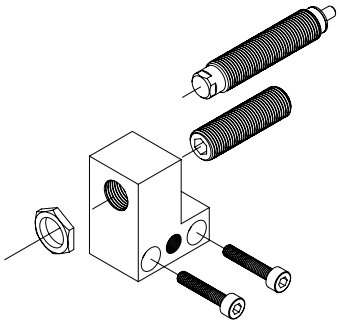

Ⓐ Stopper	
S	Stroke adjusting stopper
A	Shock absorber stopper

Ⓑ Stopper installation position *1	
1	Stopper position for ① or ④
2	Stopper position for ② or ③

Ⓒ Port on the stopper	
Blank	Without port
D	With side and bottom ports

Ⓓ Adjustable stroke length *2/*3	
Blank	Adjustable stroke range 5 mm
S02	Adjustable stroke range 15 mm
S03	Adjustable stroke range 25 mm

*1: When installing in the stopper mounting position ① or ②, the stroke causes changes in the adjustable stroke length; see the table below.
*2: ø6 and ø8 are not available for S03.
*3: Cannot be selected for the shock absorber stopper "A".

Note) Bottom port is plug-sealed.
When using the bottom port with ø20 and 25, buy a plug kit (LCR-20-N 2 pieces/set) and seal the side surface ports before using.

Precautions when purchasing the stopper set

When the stopper set is installed in the mounting position ① or ② (refer to page 60), note that the adjustable stroke length will be as shown on the right according to the stroke length.

—: Not applicable

Model No. code	Option code		Discrete stroke adjusting stopper Adjustable stroke length (mm)		
	Bore size	Stroke length	-5	-15	-25
LCR Series	ø6, ø8	10	S02	—	—
		20 or more	Blank	S02	—
	ø12 to ø25	10	S03	—	—
		20	S02	S03	—
		30 or more	Blank	S02	S03

● Stopper set weight (Unit: g)

Stopper	S1,S2			A1,A2
Port on the stopper	Blank, D			
Adjustable stroke length	Blank	S02	S03	Blank
ø6	15	18	—	18
ø8	21	25	—	27
ø12	28	31	34	33
ø16	42	47	52	49
ø20	77	85	92	86
ø25	87	94	101	95

How to order discrete stopper bracket

● Used when changing between □ 1 (□ 3) and □ 2 (□ 4) or when changing to the stopper with port.
□ :SA

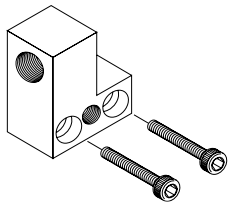

LCR - 12 - STB 1 D

Bore size
(Item Ⓐ on page 60)

Ⓐ Stopper installation position	
1	For stopper position ① or ④
2	For stopper position ② or ③

Ⓑ Port on the stopper	
Blank	Without port
D	With side and bottom ports

Note) Bottom port is plug-sealed.
When using the bottom port with ø20 and 25, buy a plug kit (LCR-20-N 2 pieces/set) and seal the side surface ports before using.

● Stopper bracket weight (Unit: g)

Stopper installation position	1,2
Port on the stopper	Blank, D
ø6	8
ø8	14
ø12	20
ø16	29
ø20	53
ø25	62

How to order discrete stroke adjusting stopper

● Hexagon socket set screw with urethane
● Use when changing the adjustable stroke range or when using a custom stroke length.

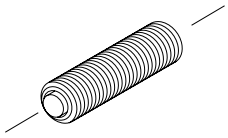

LCR - 12 - S02

Bore size
(Item Ⓐ on page 60)

Ⓐ Adjustable stroke range	
S01	Single side 5 mm (standard)
S02	Single side 15 mm
S03	Single side 25 mm

Specify S01, S02 or S03 in Ⓐ.
Note: S03 is not available for ø6 and ø8.
Some models may not be available and adjustable stroke range may differ from the above depending on the model No.

Precautions when purchasing discrete stopper

When a discrete stroke adjusting stopper or a discrete shock absorber stopper is installed in the ① or ② position (refer to page 60), the combination will be as shown on the right according to the stroke length and adjustable stroke length.

— : Not available

Model No. code	Option code		Discrete stroke adjusting stopper Adjustable stroke length (mm)			Discrete shock absorber stopper
	Bore size	Stroke length	-5	-15	-25	
LCR Series -S1, S2, S5, S6 -A1, A2, A5, A6	ø6, ø8	10	S02	—	—	—
		20 or more	S01	S02	—	A01
	ø12 to ø25	10	S03	—	—	—
		20	S02	S03	—	—
		30 or more	S01	S02	S03	A01

● Discrete stroke adjusting stopper weight (Unit: g)

Adjustable stroke range	S01	S02	S03
ø6	6	9	—
ø8	7	10	—
ø12	7	11	14
ø16	11	16	22
ø20	22	30	37
ø25	23	30	37

LCM
LCR
LCG
LCW
LCX
STM
STG
STS/STL
STR2
UCA2
ULK*
JSK/M2
JSG
JSC3/JSC4
USSD
UFCD
USC
UB
JSB3
LMB
LML
HCM
HCA
LBC
CAC4
UCAC2
CAC-N
UCAC-N
RCS2
RCC2
PCC
SHC
MCP
GLC
MFC
BBS
RRC
GRC
RV3*
NHS
HRL
LN
Hand
Chuk
MecHnd/Chuk
ShkAbs
FJ
FK
SpdContr
Ending

How to order discrete shock absorber stopper

- Shock absorber set
- Use when changing from the stroke adjusting stopper or shock absorber stopper.

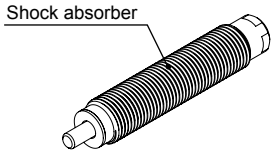

LCR - 12 - A01

Bore size
(Item Ⓐ on page 60)

Note: Some models may not be available depending on the specifications. Refer to page 60. For the adjustable stroke range with a shock absorber stopper, refer to page 82.

Applicable shock absorber model No.

Model	Shock absorber model No.	Weight (g)
LCR-6	SKL-0804	9
LCR-8	SKL-0805	12
LCR-12	SKL-0805	12
LCR-16	SKL-1006	19
LCR-20	SKL-1208	31
LCR-25	SKL-1208	31

How to order discrete stopper block

- Use it when changing from the standard to the stroke adjusting stopper or shock absorber stopper.

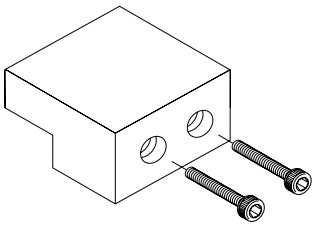

LCR - 12 - SB1 T

Bore size
(Item Ⓐ on page 60)

Ⓐ Stopper block	
SB1	ø6/ø8: For 30 mm stroke length or less
	ø12 to ø25: For 50 mm stroke length or less
SB2	ø6/ø8: For 40 mm stroke length or more
	ø12 to ø25: For 75 mm stroke length or more

Ⓑ Material	
Blank	Stopper block material: steel
T	Stopper block material: steel (nitriding)

- Discrete stopper block weight (Unit: g)

Block	SB1(T)	SB2(T)
ø6	11	21
ø8	14	24
ø12	23	37
ø16	38	72
ø20	60	99
ø25	112	206

Model No. of plug kit for side piping port

LCR - 12 - N (2/set)

Bore size
(Item Ⓐ on page 60)

- Weight of plug kit for side piping port

Bore size	Weight (g)
ø8	1
ø12	1
ø16	1
ø20	5

Internal structure and parts list

● LCR

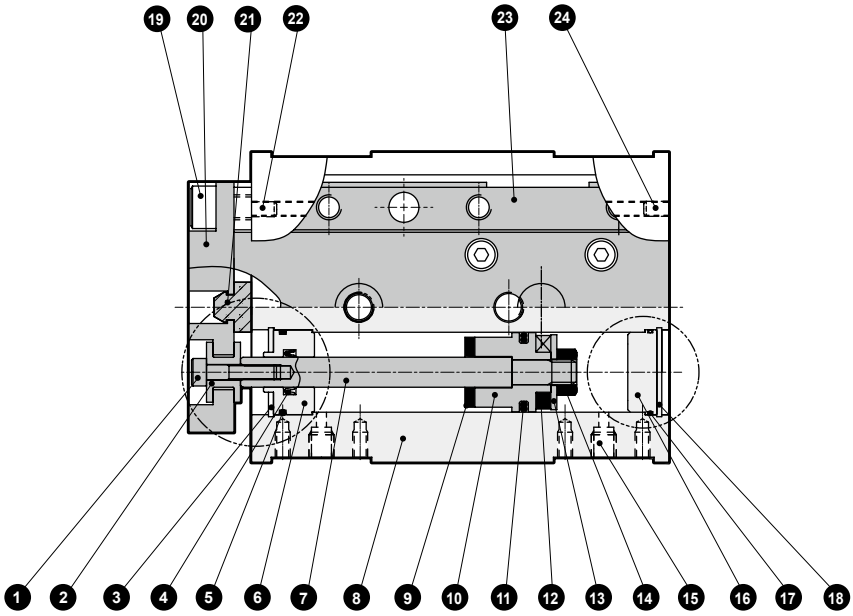

For A part ø6

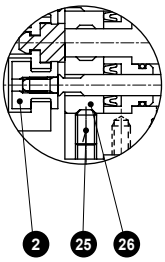

For A part ø8

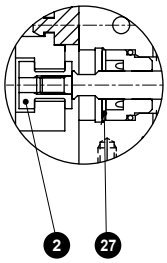

For B part ø6.8

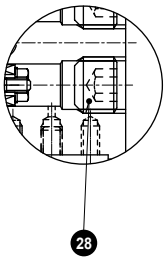

Parts list

No.	Part name	Material	Remarks
1	Hexagon socket head cap screw	Alloy steel	Zinc chromate
2	Floating bush	Stainless steel	
3	C type snap ring	Steel	ø8 to 25 only
4	Rod packing	Nitrile rubber	
5	Metal gasket	Nitrile rubber	
6	Rod metal	Aluminum alloy	Alumite
7	Piston rod	Stainless steel	
8	Cylinder body	Aluminum alloy	Hard alumite
9	Cushion rubber (R)	Urethane rubber	
10	Piston	Aluminum alloy	Chromate
11	Piston packing	Nitrile rubber	
12	Magnet	Plastic	
13	Plain washer	Stainless steel	
14	Hexagon nut	Stainless steel	
15	Plug	Stainless steel	ø6 to ø16
		Steel	ø20 to ø25

No.	Part name	Material	Remarks
16	Cover	Aluminum alloy	Chromate
17	Cover gasket	Nitrile rubber	
18	C type snap ring	Steel	ø12 to 25 only
19	Hexagon socket head cap screw	Alloy steel	Zinc chromate
20	End plate	Aluminum alloy	Alumite
21	Cushion rubber (H)	Urethane rubber	
22	Hexagon socket set screw	Stainless steel	
23	Table	Aluminum alloy	Alumite
24	Plug	Stainless steel	ø6 to ø20
		Steel	ø25
25	Hexagon socket set screw	Stainless steel	ø6 only
26	Rod metal A	Aluminum alloy	
27	Cap	Stainless steel	
28	Hexagon socket set screw	Alloy steel	Zinc chromate

Repair parts list

Bore size (mm)	Kit No.	Repair parts No.
ø6	LCR-6K	
ø8	LCR-8K	
ø12	LCR-12K	4 5 9
ø16	LCR-16K	11 17 21
ø20	LCR-20K	
ø25	LCR-25K	

LCM
LCR
LCG
LCW
LCX
STM
STG
STS/STL
STR2
UCA2
ULK*
JSK/M2
JSG
JSC3/JSC4
USSD
UFCD
USC
UB
JSB3
LMB
LML
HCM
HCA
LBC
CAC4
UCAC2
CAC-N
UCAC-N
RCS2
RCC2
PCC
SHC
MCP
GLC
MFC
BBS
RRC
GRC
RV3*
NHS
HRL
LN
Hand
Chuk
MecHnd/Chuk
ShkAbs
FJ
FK
SpdContr
Ending

Internal structure and parts list

Structure with stopper

● Type with port on stopper side and bottom (code D)

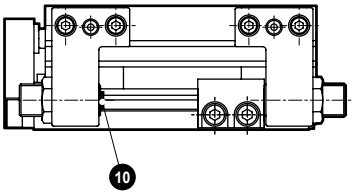

● Without port on the stopper

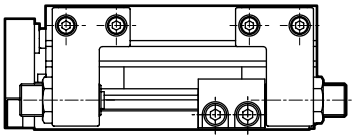

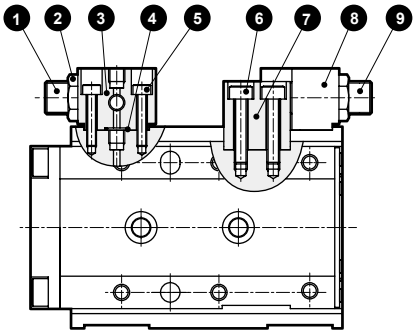

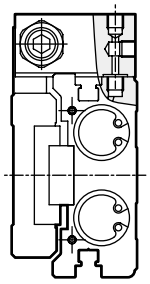

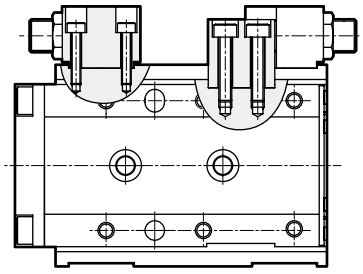

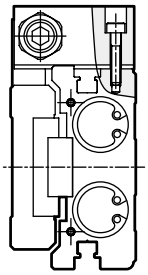

Parts list

No.	Part name	Material	Remarks
1	Stopper bolt	Alloy steel	Nickeling
2	Hexagon nut	Alloy steel	Nickeling
3	Stopper A	Aluminum alloy	Alumite
4	Gasket	Urethane rubber	
5	Hexagon socket head cap screw	Alloy steel	Zinc chromate
6	Hexagon socket head cap screw	Alloy steel	Zinc chromate

No.	Part name	Material	Remarks
7	Stopper block (Stopper block code: Blank)	Steel	Nickeling
	Stopper block (Stopper block code: T)	Steel	Nitriding
8	Stopper B	Aluminum alloy	Alumite
9	Stopper bolt	Alloy steel	Nickeling
10	Cushion rubber	Urethane rubber	

Structure diagram with buffer

LCR-*-*-B*

● With buffer, without switch groove

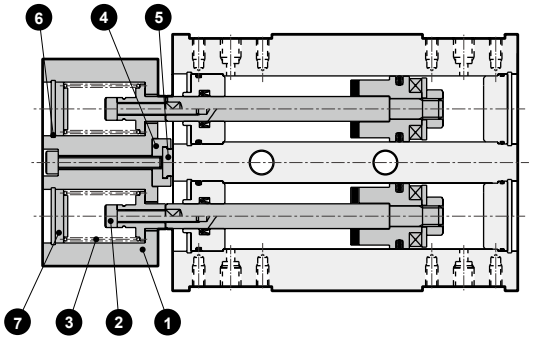

● With buffer, with switch groove

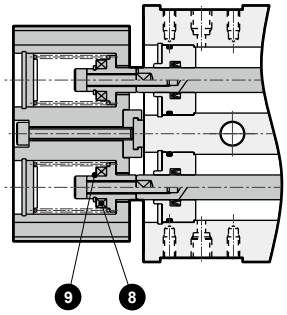

Parts list

No.	Part name	Material	Remarks
1	End plate	Aluminum alloy	Alumite
2	Hexagon socket head cap screw	Alloy steel	Zinc chromate
3	Coil spring	Steel	
4	Stopper	ø6: Stainless steel ø8 to 25: Aluminum alloy	
5	Cushion rubber	Urethane rubber	
6	C type snap ring	Steel	
7	Cover	Aluminum alloy	Chromate
8	Magnet	Plastic	
9	E-ring	ø6 to 12: Stainless steel ø16 to 25: Steel	

LCM
LCR
LCG
LCW
LCX
STM
STG
STS/STL
STR2
UCA2
ULK*
JSK/M2
JSG
JSC3/JSC4
USSD
UFCD
USC
UB
JSB3
LMB
LML
HCM
HCA
LBC
CAC4
UCAC2
CAC-N
UCAC-N
RCS2
RCC2
PCC
SHC
MCP
GLC
MFC
BBS
RRC
GRC
RV3*
NHS
HRL
LN
Hand
Chuk
MecHnd/Chuk
ShkAbs
FJ
FK
SpdContr
Ending

Dimensions (bore size: ø6)

CAD

● LCR-6
Stroke length: 10, 20, 30
(Body mounting hole in the figure shows 20 mm stroke length)

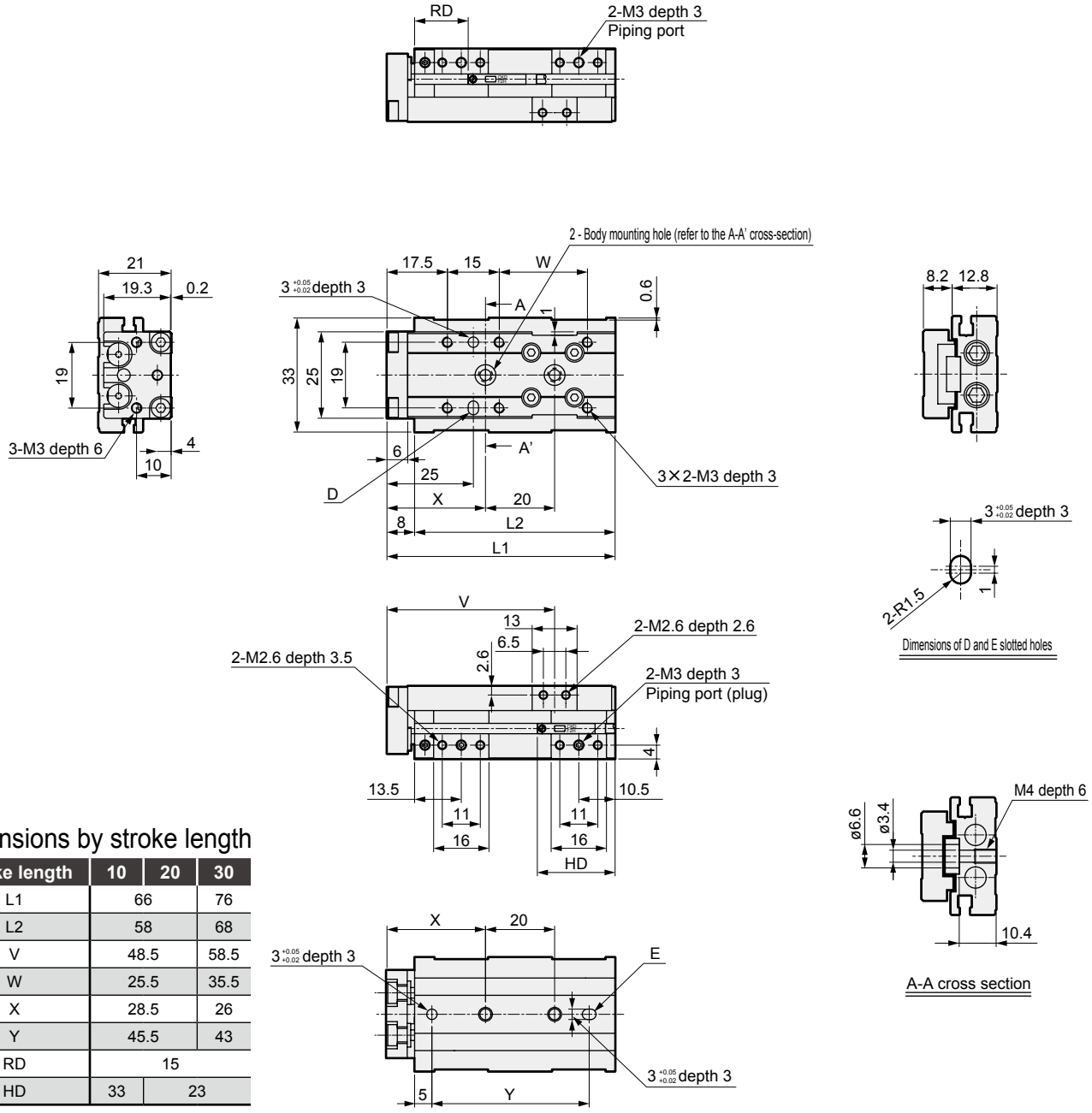

Dimensions by stroke length

Stroke length	10	20	30
L1	66		76
L2	58		68
V	48.5		58.5
W	25.5		35.5
X	28.5		26
Y	45.5		43
RD	15		
HD	33	23	

● Dimensions of protruding section when the F2S or F3S cylinder switch is mounted

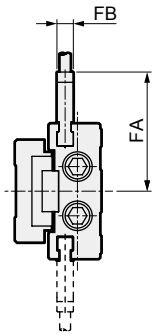

Stroke length	10	20	30
FA	29.1		
FB	4		
RD	14		
HD	34	24	

*1: When using a positioning hole, use a pin of dimensions that do not require press fitting.
The recommended tolerance of a pin is JIS tolerance m6 or less.

LCM
LCR
LCG
LCW
LCX
STM
STG
STS/STL
STR2
UCA2
ULK*
JSK/M2
JSG
JSC3/JSC4
USSD
UFCD
USC
UB
JSB3
LMB
LML
HCM
HCA
LBC
CAC4
UCAC2
CAC-N
UCAC-N
RCS2
RCC2
PCC
SHC
MCP
GLC
MFC
BBS
RRC
GRC
RV3*
NHS
HRL
LN
Hand
Chuk
MecHnd/Chuk
ShkAbs
FJ
FK
SpdContr
Ending

Dimensions (bore size: ø6)

● LCR-6

Stroke length: 40, 50
(Body mounting hole in the figure shows 50 mm stroke length)

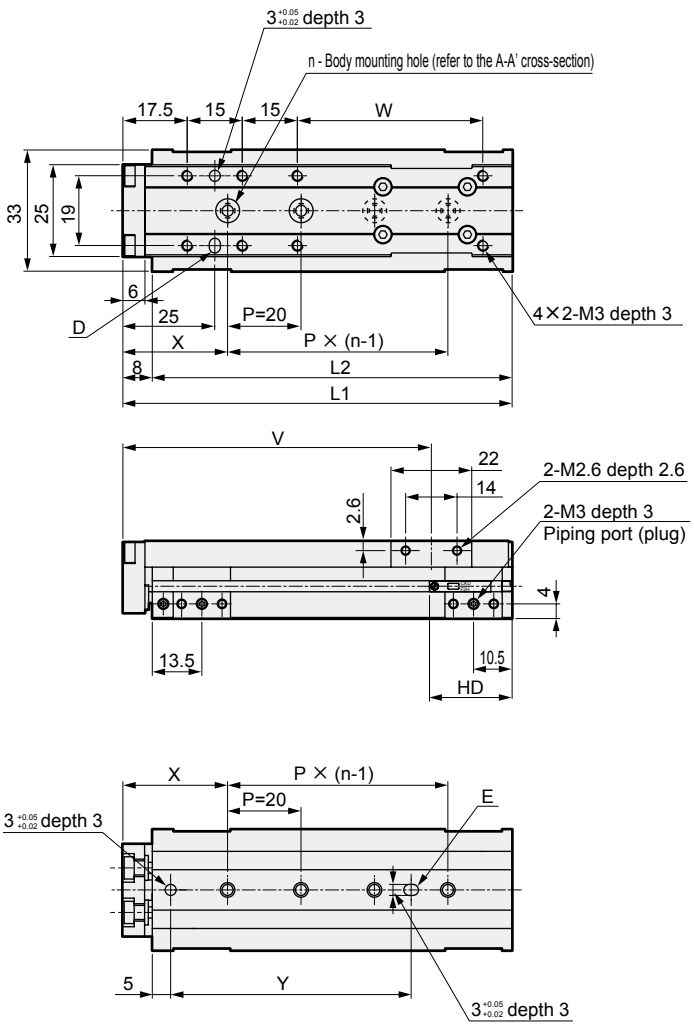

Dimensions by stroke length

Stroke length	40	50
L1	96	106
L2	88	98
n	3	4
V	74	84
W	40.5	50.5
X	27	28.5
Y	44	65.5
RD	15	
HD	33	

● Dimensions of protruding section when the F2S or F3S cylinder switch is mounted

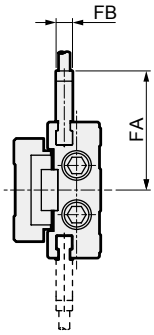

Stroke length	40	50
FA	29.1	
FB	4	
RD	14	
HD	34	

*1: When using a positioning hole, use a pin of dimensions that do not require press fitting.
The recommended tolerance of a pin is JIS tolerance m6 or less.

Dimensions (bore size: ø8)

● LCR-8

Stroke length: 10, 20, 30
(Body mounting hole in the figure shows 30 mm stroke length)

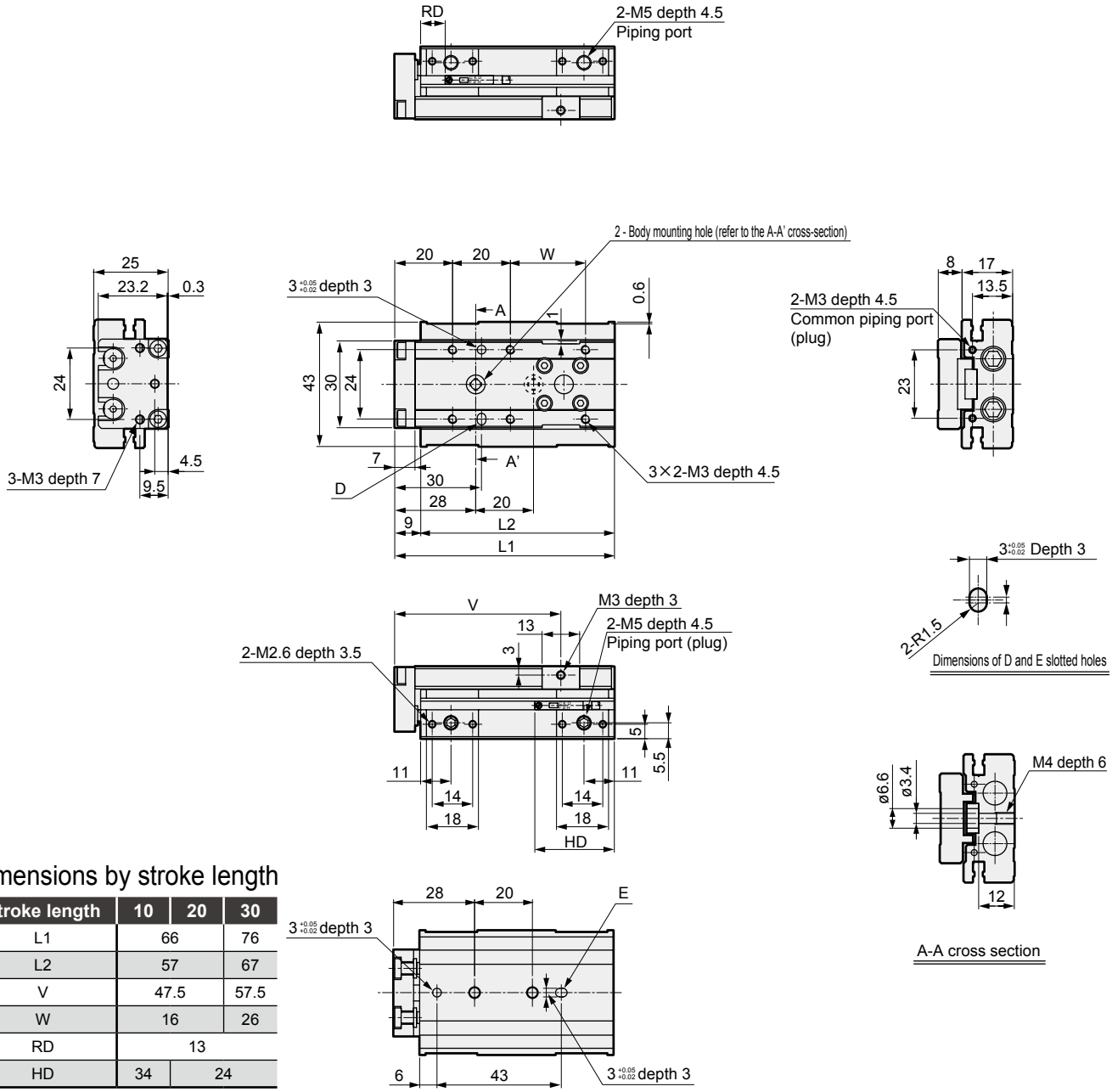

Dimensions by stroke length

Stroke length	10	20	30
L1	66		76
L2	57		67
V	47.5		57.5
W	16		26
RD	13		
HD	34	24	

● Dimensions of protruding section when the F2S or F3S cylinder switch is mounted

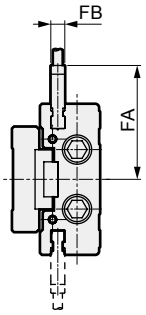

Stroke length	10	20	30
FA	32.6		
FB	4		
RD	12		
HD	35	25	

*1 : When using a positioning hole, use a pin of dimensions that do not require press fitting.
The recommended tolerance of a pin is JIS tolerance m6 or less.

*2 : When using rear piping, refer to the cautions of 1. Common; when piping on page 131.

LCM
LCR
LCG
LCW
LCX
STM
STG
STS/STL
STR2
UCA2
ULK*
JSK/M2
JSG
JSC3/JSC4
USSD
UFCD
USC
UB
JSB3
LMB
LML
HCM
HCA
LBC
CAC4
UCAC2
CAC-N
UCAC-N
RCS2
RCC2
PCC
SHC
MCP
GLC
MFC
BBS
RRC
GRC
RV3*
NHS
HRL
LN
Hand
Chuk
MecHnd/Chuk
ShkAbs
FJ
FK
SpdContr
Ending

Dimensions (bore size: ø8)

CAD

● LCR-8

Stroke length: 40, 50, 75
(Body mounting hole in the figure shows 50 mm stroke length)

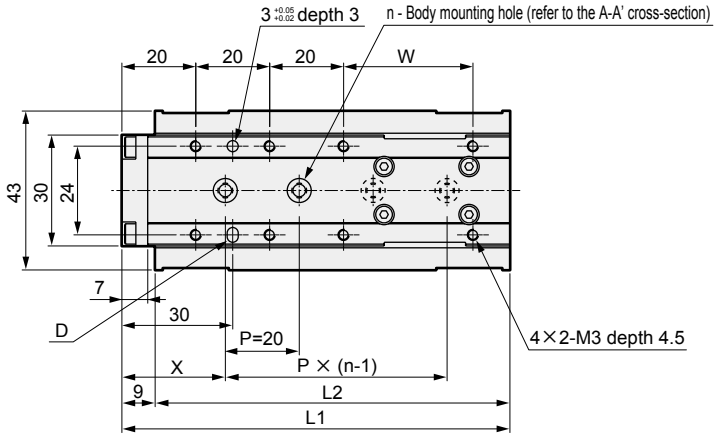

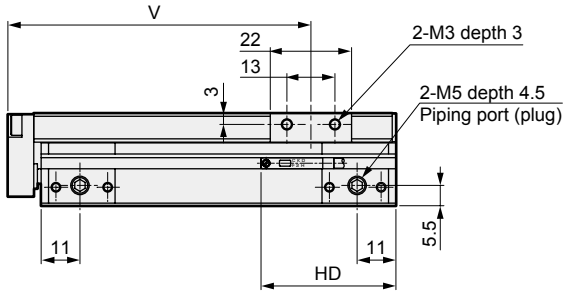

Dimensions by stroke length

Stroke length	40	50	75
L1	95	105	130
L2	86	96	121
n	3	4	5
V	72	82	107
W	25	35	60
X	26.5	28	25
Y	41.5	63	80
RD	13		
HD	33		

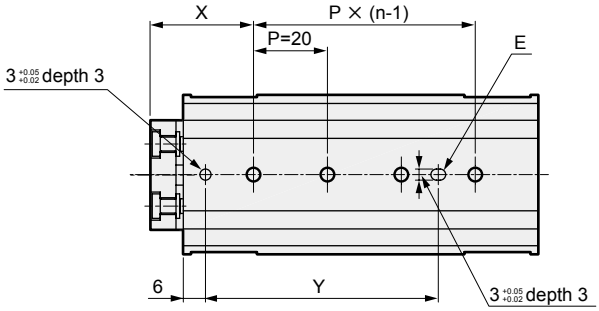

● Dimensions of protruding section when the F2S or F3S cylinder switch is mounted

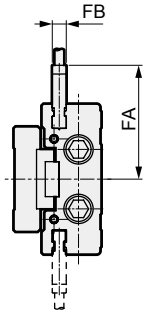

Stroke length	40	50	75
FA	32.6		
FB	4		
RD	12		
HD	34		

*1 : When using a positioning hole, use a pin of dimensions that do not require press fitting.
The recommended tolerance of a pin is JIS tolerance m6 or less.

*2 : When using rear piping, refer to the cautions of 1. Common; when piping on page 131.

LCM
LCR
LCG
LCW
LCX
STM
STG
STS/STL
STR2
UCA2
ULK*
JSK/M2
JSG
JSC3/JSC4
USSD
UFCD
USC
UB
JSB3
LMB
LML
HCM
HCA
LBC
CAC4
UCAC2
CAC-N
UCAC-N
RCS2
RCC2
PCC
SHC
MCP
GLC
MFC
BBS
RRC
GRC
RV3*
NHS
HRL
LN
Hand
Chuk
MecHnd/Chuk
ShkAbs
FJ
FK
SpdContr
Ending

Dimensions (bore size: ø12)

CAD

● LCR-12

Stroke: 10, 20, 30, 40, 50

(Body mounting hole in the figure shows 30 mm stroke length)

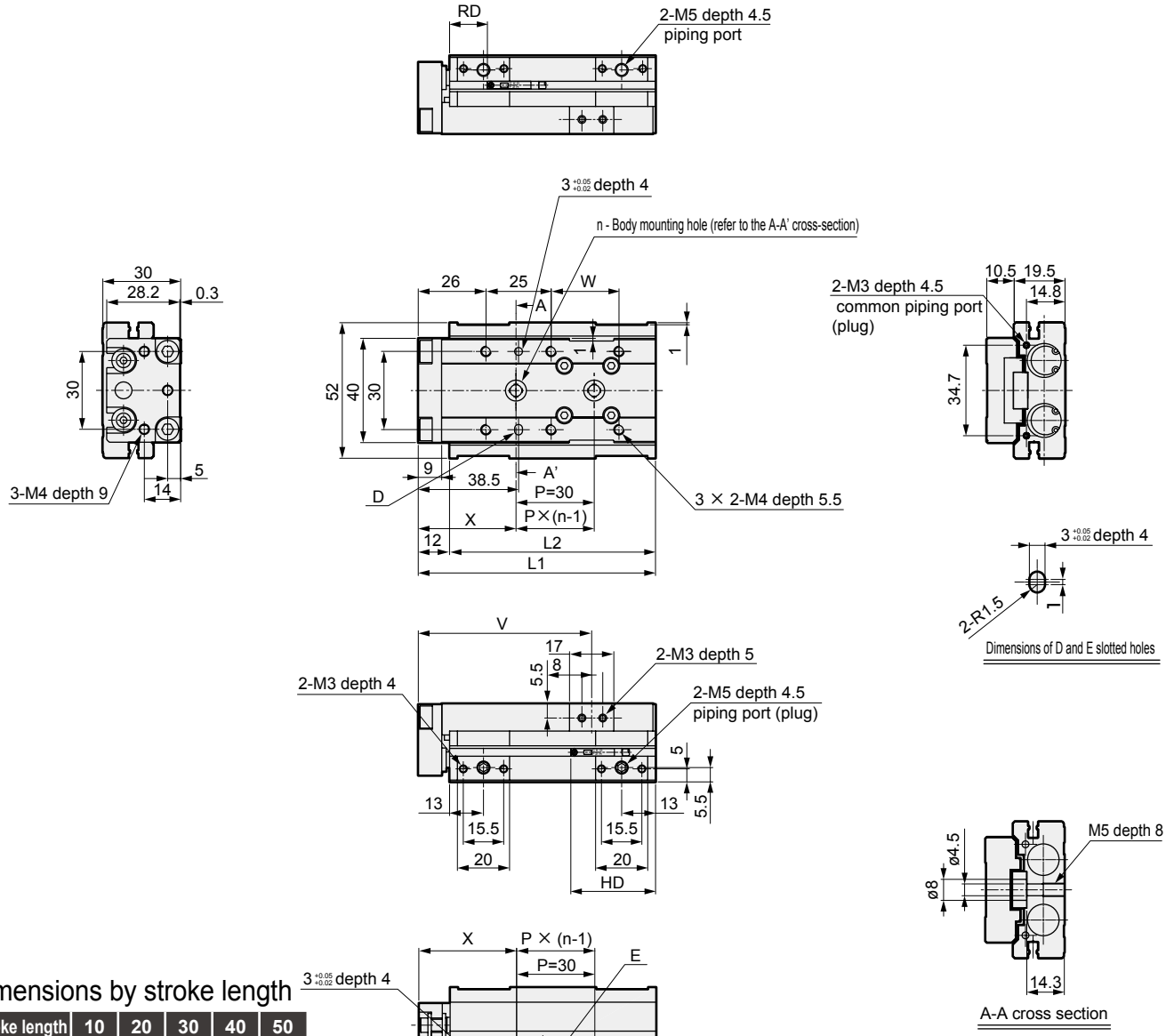

Dimensions by stroke length

Stroke length	10	20	30	40	50
L1	91			101	111
L2	79			89	99
n	2			3	
V	66.5			76.5	86.5
W	26			36	46
X	37.5			36	32
Y	32.5			31	57
RD	16.5				
HD	52.5	42.5	32.5		

● Dimensions of protruding section when the F2S or F3S cylinder switch is mounted

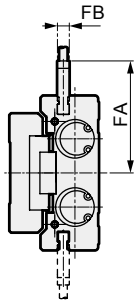

Stroke length	10	20	30	40	50
FA	37.8				
FB	4				
RD	15.5				
HD	53.5	43.5	33.5		

*1 : When using a positioning hole, use a pin of dimensions that do not require press fitting.
The recommended tolerance of a pin is JIS tolerance m6 or less.

*2 : When using rear piping, refer to the cautions of 1. Common; when piping on page 131.

LCM
LCR
LCG
LCW
LCX
STM
STG
STS/STL
STR2
UCA2
ULK*
JSK/M2
JSG
JSC3/JSC4
USSD
UFCD
USC
UB
JSB3
LMB
LML
HCM
HCA
LBC
CAC4
UCAC2
CAC-N
UCAC-N
RCS2
RCC2
PCC
SHC
MCP
GLC
MFC
BBS
RRC
GRC
RV3*
NHS
HRL
LN
Hand
Chuk
MecHnd/Chuk
ShkAbs
FJ
FK
SpdContr
Ending

Dimensions (bore size: ø12)

CAD

● LCR-12

Stroke length: 75, 100

(Body mounting hole in the figure shows 75 mm stroke length)

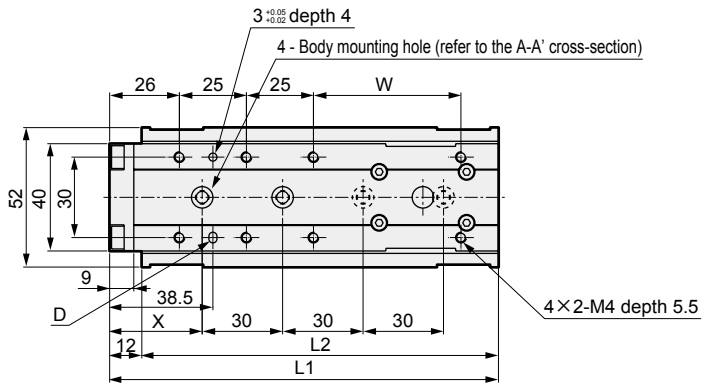

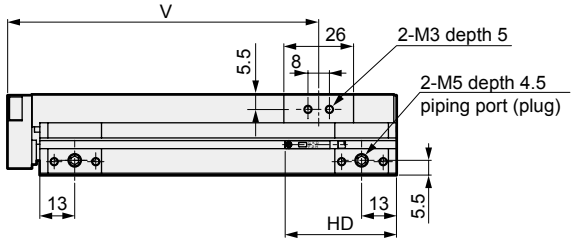

Dimensions by stroke length

Stroke length	75	100
L1	145	170
L2	133	158
V	116	141
W	55	80
X	34.5	47
Y	89.5	102
RD	16.5	
HD	41.5	

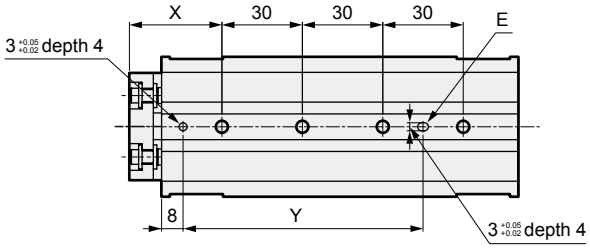

● Dimensions of protruding section when the F2S or F3S cylinder switch is mounted

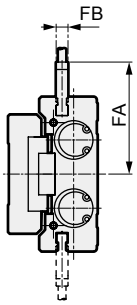

Stroke length	75	100
FA	37.8	
FB	4	
RD	15.5	
HD	42.5	

*1 : When using a positioning hole, use a pin of dimensions that do not require press fitting.
The recommended tolerance of a pin is JIS tolerance m6 or less.

*2 : When using rear piping, refer to the cautions of 1. Common; when piping on page 131.

LCM
LCR
LCG
LCW
LCX
STM
STG
STS/STL
STR2
UCA2
ULK*
JSK/M2
JSG
JSC3/JSC4
USSD
UFCD
USC
UB
JSB3
LMB
LML
HCM
HCA
LBC
CAC4
UCAC2
CAC-N
UCAC-N
RCS2
RCC2
PCC
SHC
MCP
GLC
MFC
BBS
RRC
GRC
RV3*
NHS
HRL
LN
Hand
Chuk
MecHnd/Chuk
ShkAbs
FJ
FK
SpdContr
Ending

Dimensions (bore size: ø16)

CAD

● LCR-16

Stroke: 10, 20, 30, 40, 50

(Body mounting hole in the figure shows 30 mm stroke length)

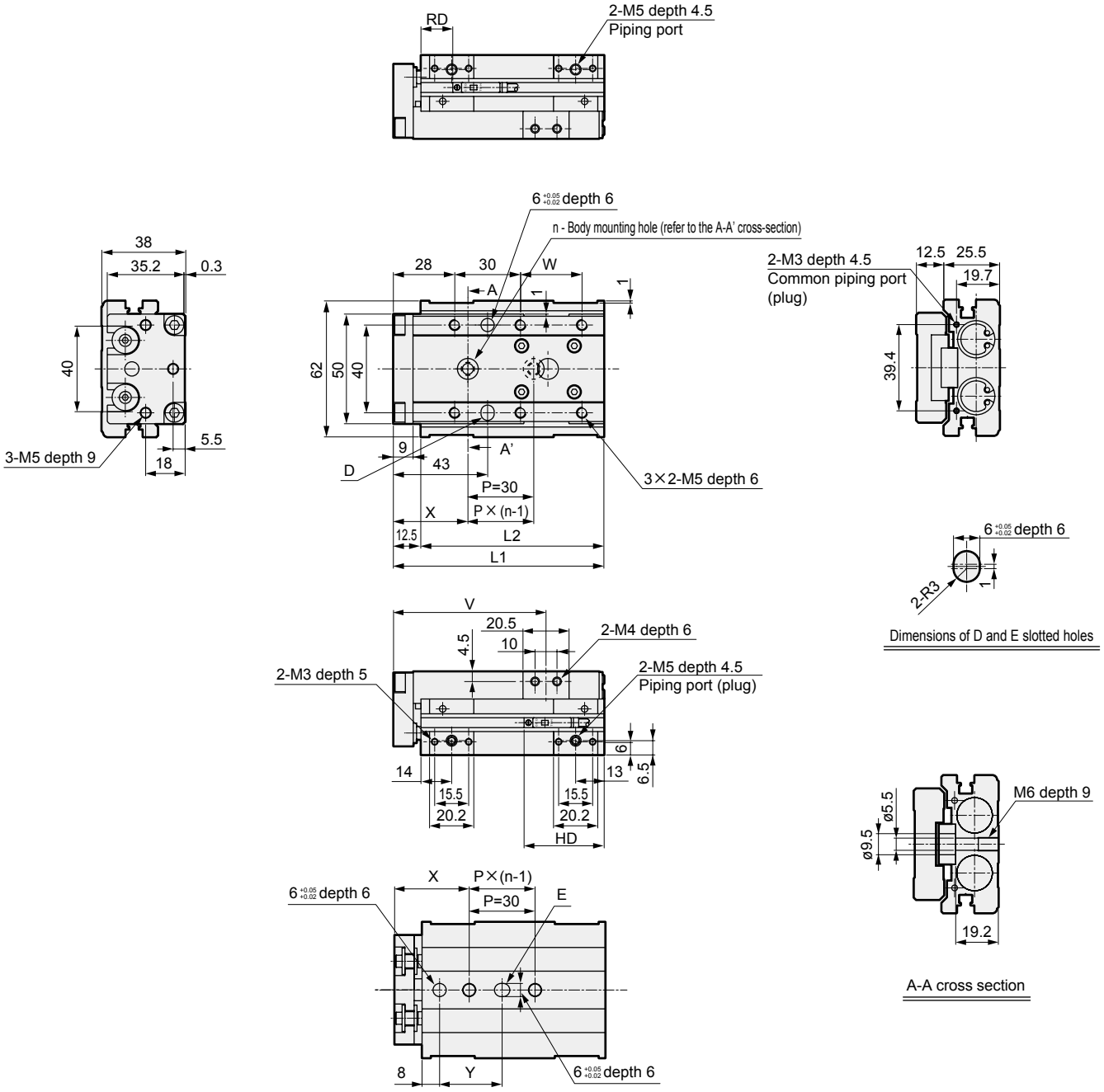

Dimensions by stroke length

Stroke length		10	20	30	40	50
L1		96			106	116
L2		83.5			93.5	103.5
n		2				3
V		69.8			79.8	89.8
W		28			38	48
X		34			45.5	35.5
Y		28.5			40	60
T0/5*	RD	17				
T2/3*	HD	56.5	46.5	36.5		
T2/3W*	RD	19.5				
	HD	54	44	34		

*1 : When using a positioning hole, use a pin of dimensions that do not require press fitting.
The recommended tolerance of a pin is JIS tolerance m6 or less.

*2 : When using rear piping, refer to the cautions of 1. Common; when piping on page 131.

LCM
LCR
LCG
LCW
LCX
STM
STG
STS/STL
STR2
UCA2
ULK*
JSK/M2
JSG
JSC3/JSC4
USSD
UFCD
USC
UB
JSB3
LMB
LML
HCM
HCA
LBC
CAC4
UCAC2
CAC-N
UCAC-N
RCS2
RCC2
PCC
SHC
MCP
GLC
MFC
BBS
RRC
GRC
RV3*
NHS
HRL
LN
Hand
Chuk
MecHnd/Chuk
ShkAbs
FJ
FK
SpdContr
Ending

Dimensions (bore size: ø16)

● LCR-16

Stroke length: 75, 100, 125
(Body mounting hole in the figure shows 75 mm stroke length)

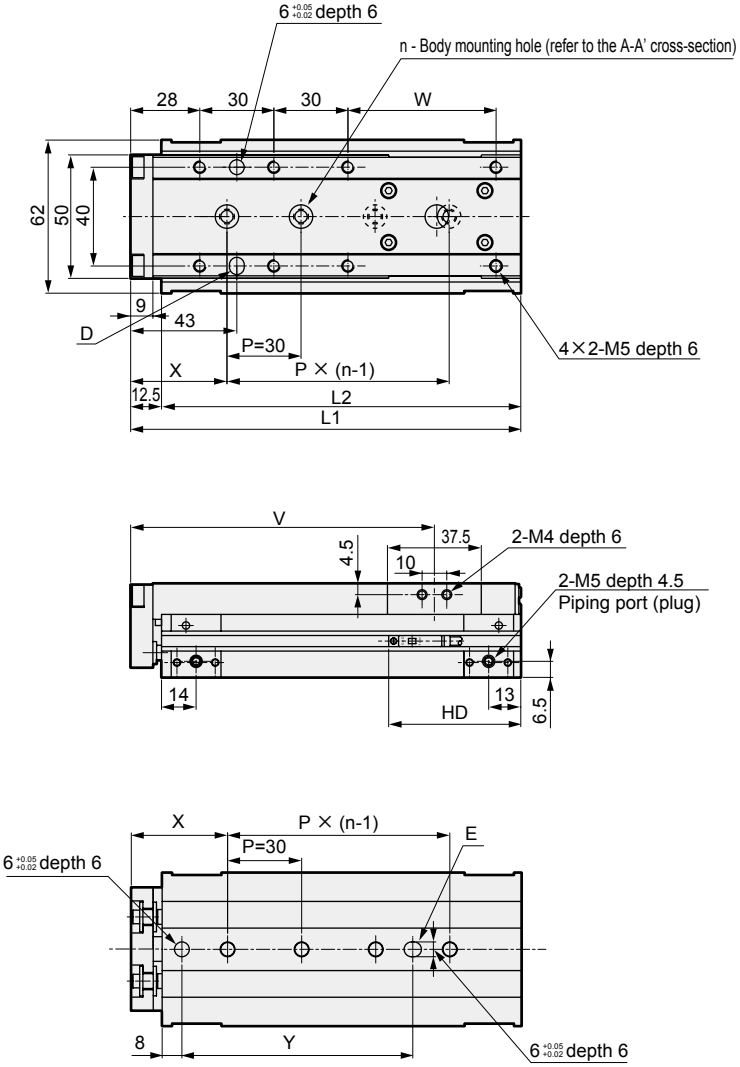

Dimensions by stroke length

Stroke length		75	100	125
L1		158	183	208
L2		145.5	170.5	195.5
n		4	5	
V		123.3	148.3	173.3
W		60	85	110
X		39	37	49
Y		93.5	121.5	133.5
T0/5*	RD	17		
T2/3*	HD	53.5		
T2/3W*	RD	19.5		
	HD	51		

*1 : When using a positioning hole, use a pin of dimensions that do not require press fitting.
The recommended tolerance of a pin is JIS tolerance m6 or less.

*2 : When using rear piping, refer to the cautions of 1. Common; when piping on page 131.

LCM
LCR
LCG
LCW
LCX
STM
STG
STS/STL
STR2
UCA2
ULK*
JSK/M2
JSG
JSC3/JSC4
USSD
UFCD
USC
UB
JSB3
LMB
LML
HCM
HCA
LBC
CAC4
UCAC2
CAC-N
UCAC-N
RCS2
RCC2
PCC
SHC
MCP
GLC
MFC
BBS
RRC
GRC
RV3*
NHS
HRL
LN
Hand
Chuk
MecHnd/Chuk
ShkAbs
FJ
FK
SpdContr
Ending

Dimensions (bore size: ø20)

CAD

● LCR-20

Stroke: 10, 20, 30, 40, 50

(Body mounting hole in the figure shows 30 mm stroke length)

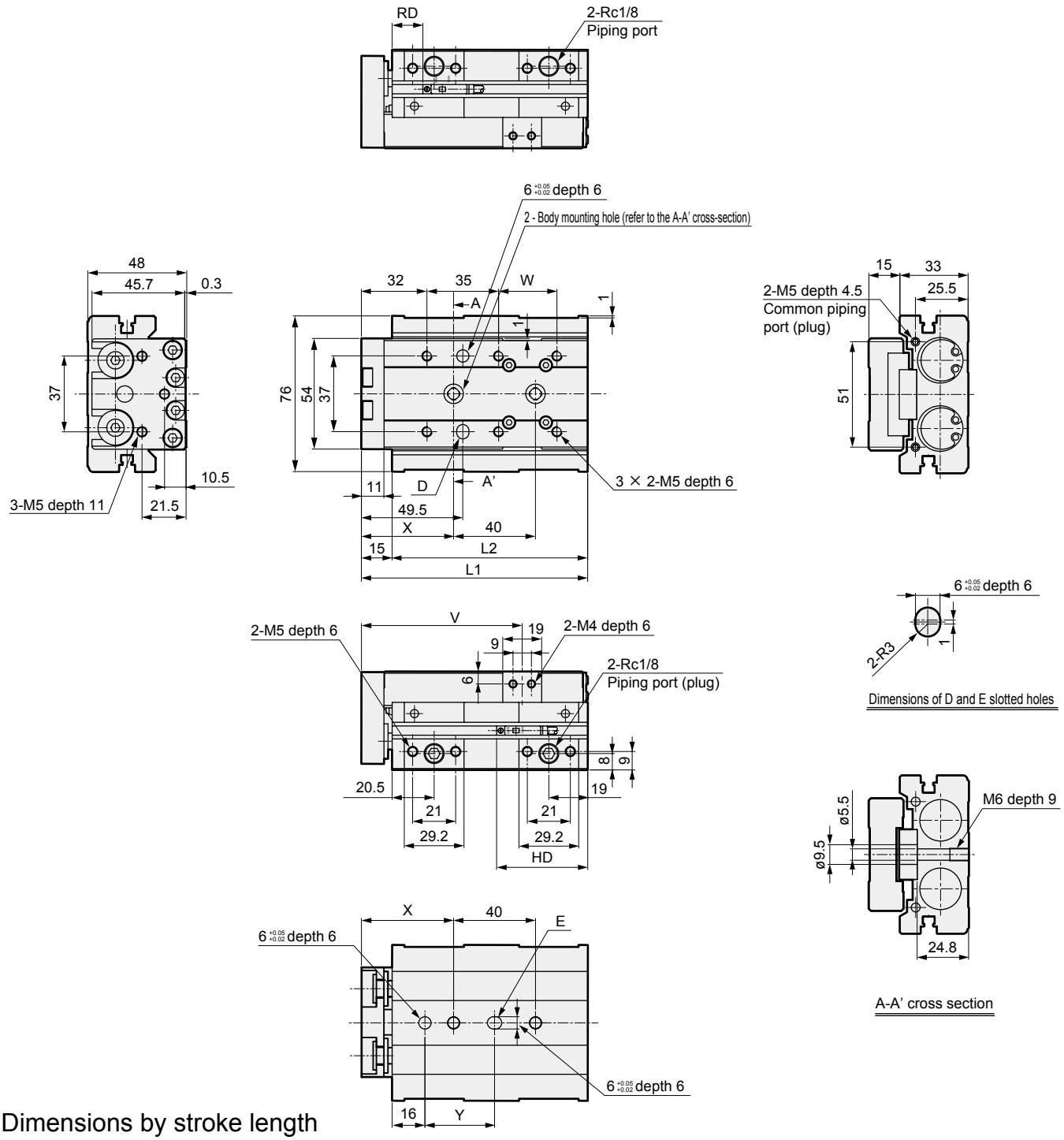

Dimensions by stroke length

Stroke length		10	20	30	40	50
L1		110.5			120.5	130.5
L2		95.5			105.5	115.5
V		78.5			88.5	98.5
W		28.5			38.5	48.5
X		45			51	49
Y		34			40	38
T0/5*	RD	20.5				
T2/3*	HD	65	55	45		
T2/3W*	RD	22				
	HD	63	53	43		

*1 : When using a positioning hole, use a pin of dimensions that do not require press fitting.
The recommended tolerance of a pin is JIS tolerance m6 or less.

*2 : When using rear piping, refer to the cautions of 1. Common; when piping on page 131.

Dimensions (bore size: ø20)

● LCR-20

Stroke length: 75, 100, 125, 150

(Body mounting hole in the figure shows 100 mm stroke length)

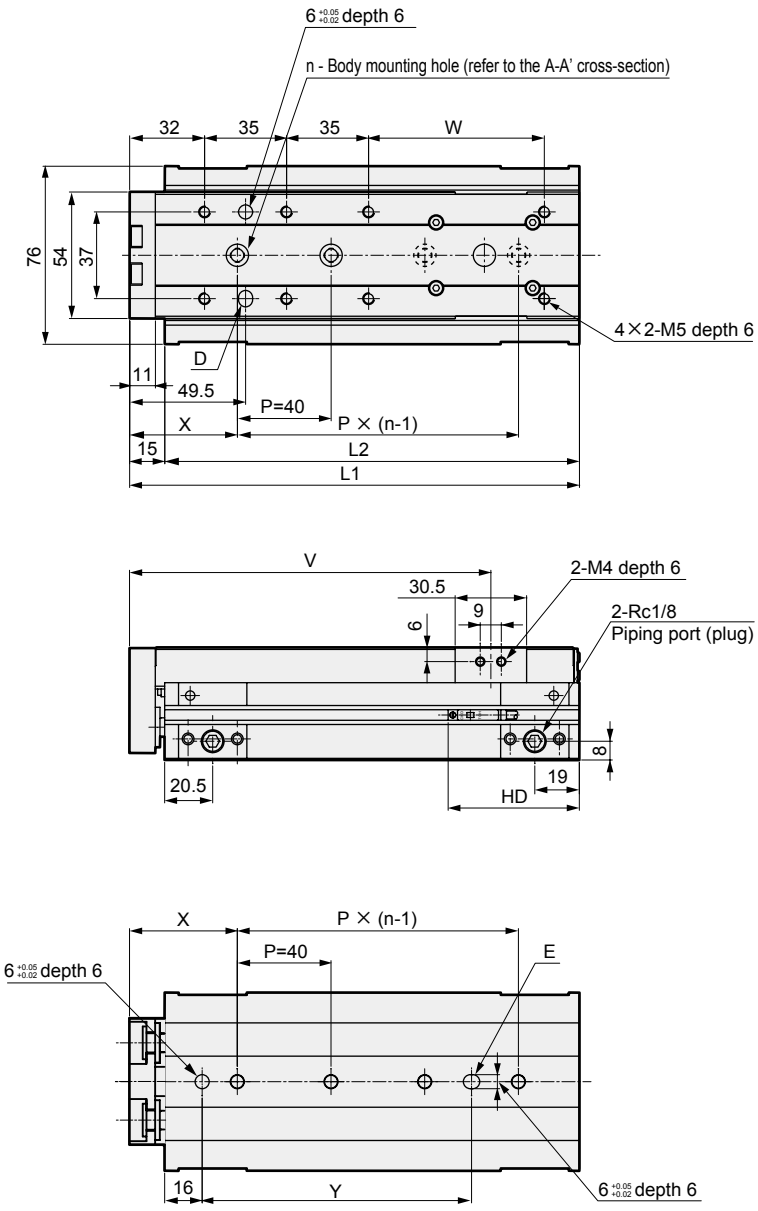

Dimensions by stroke length

Stroke length		75	100	125	150
L1		167	192	217	242
L2		152	177	202	227
n		3	4		5
V		129.3	154.3	179.3	204.3
W		50	75	100	125
X		46		53	51
Y		75	115	122	160
T0/5*	RD	20.5			
T2/3*	HD	57.5			
T2/3W*	RD	22			
	HD	55.5			

*1 : When using a positioning hole, use a pin of dimensions that do not require press fitting.
The recommended tolerance of a pin is JIS tolerance m6 or less.

*2 : When using rear piping, refer to the cautions of 1. Common; when piping on page 131.

LCM
LCR
LCG
LCW
LCX
STM
STG
STS/STL
STR2
UCA2
ULK*
JSK/M2
JSG
JSC3/JSC4
USSD
UFCD
USC
UB
JSB3
LMB
LML
HCM
HCA
LBC
CAC4
UCAC2
CAC-N
UCAC-N
RCS2
RCC2
PCC
SHC
MCP
GLC
MFC
BBS
RRC
GRC
RV3*
NHS
HRL
LN
Hand
Chuk
MecHnd/Chuk
ShkAbs
FJ
FK
SpdContr
Ending

Dimensions (bore size: ø25)

CAD

● LCR-25

Stroke: 10, 20, 30, 40, 50

(Body mounting hole in the figure shows 30 mm stroke length)

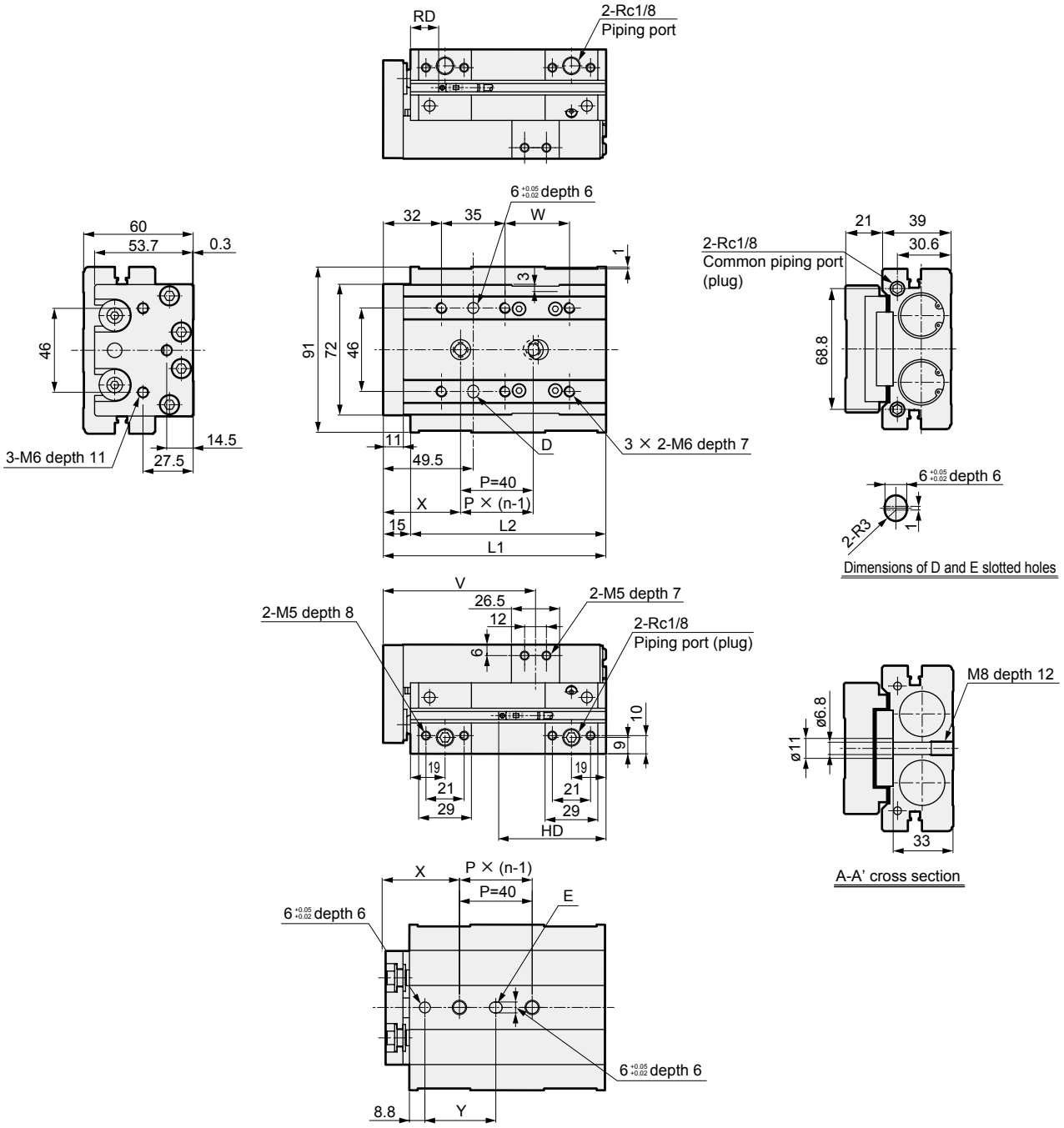

Dimensions by stroke length

Stroke length		10	20	30	40	50
L1		122.5			132.5	142.5
L2		107.5			117.5	127.5
n		2			3	2
V		83.8			93.8	103.8
W		35.5			45.5	55.5
X		42.5			45.5	60.5
Y		39			42	57
T0/5*	RD	19				
T2/3*	HD	78.5	68.5	58.5		
T2/3W*	RD	21				
	HD	76.5	66.5	56.5		

*1 : When using a positioning hole, use a pin of dimensions that do not require press fitting.
The recommended tolerance of a pin is JIS tolerance m6 or less.

*2 : When using rear piping, refer to the cautions of 1. Common; when piping on page 131.

LCM
LCR
LCG
LCW
LCX
STM
STG
STS/STL
STR2
UCA2
ULK*
JSK/M2
JSG
JSC3/JSC4
USSD
UFCD
USC
UB
JSB3
LMB
LML
HCM
HCA
LBC
CAC4
UCAC2
CAC-N
UCAC-N
RCS2
RCC2
PCC
SHC
MCP
GLC
MFC
BBS
RRC
GRC
RV3*
NHS
HRL
LN
Hand
Chuk
MecHnd/Chuk
ShkAbs
FJ
FK
SpdContr
Ending

Dimensions (bore size: ø25)

● LCR-25

Stroke length: 75, 100, 125, 150

(Body mounting hole in the figure shows 100 mm stroke length)

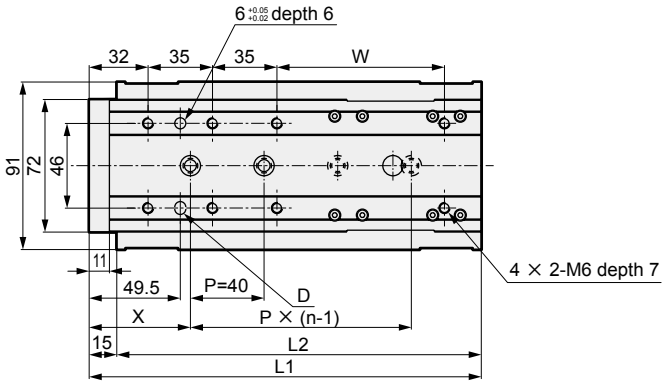

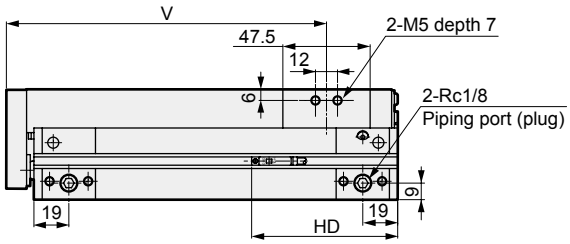

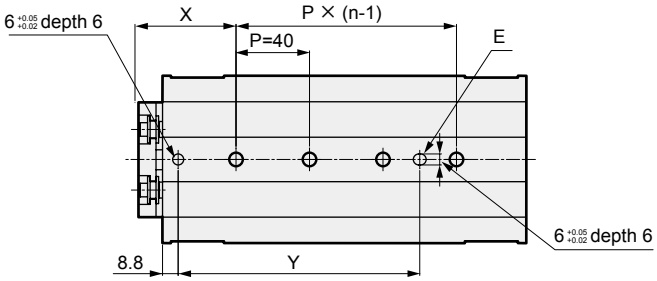

Dimensions by stroke length

Stroke length		75	100	125	150
L1		188	213	238	263
L2		173	198	223	248
n		3	4	5	
V		138.8	163.8	188.8	213.8
W		66	91	116	141
X		60	55	45	60
Y		96.5	131.5	161.5	176.5
T0/5*	RD	19			
T2/3*	HD	79			
T2/3W*	RD	21			
	HD	77			

*1 : When using a positioning hole, use a pin of dimensions that do not require press fitting.
The recommended tolerance of a pin is JIS tolerance m6 or less.

*2 : When using rear piping, refer to the cautions of 1. Common; when piping on page 131.

LCM
LCR
LCG
LCW
LCX
STM
STG
STS/STL
STR2
UCA2
ULK*
JSK/M2
JSG
JSC3/JSC4
USSD
UFCD
USC
UB
JSB3
LMB
LML
HCM
HCA
LBC
CAC4
UCAC2
CAC-N
UCAC-N
RCS2
RCC2
PCC
SHC
MCP
GLC
MFC
BBS
RRC
GRC
RV3*
NHS
HRL
LN
Hand
Chuk
MecHnd/Chuk
ShkAbs
FJ
FK
SpdContr
Ending

Dimensions: Option

● Stroke adjusting stopper (S1 to S6)

· For ø8

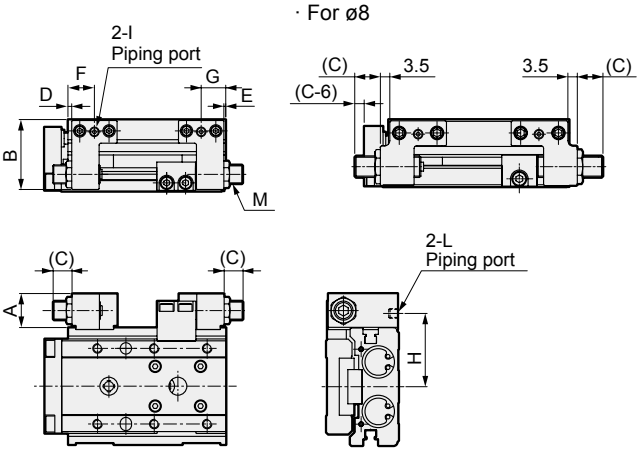

● Shock absorber stopper (A1 to A6)

· For ø8

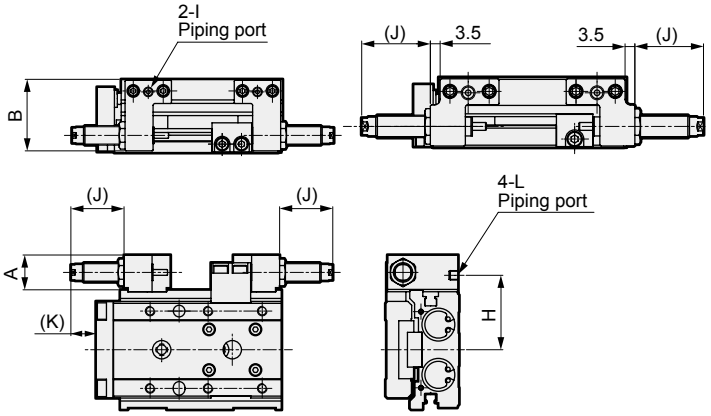

● Two-sided combined double stopper (W1 to W6)

· For ø8

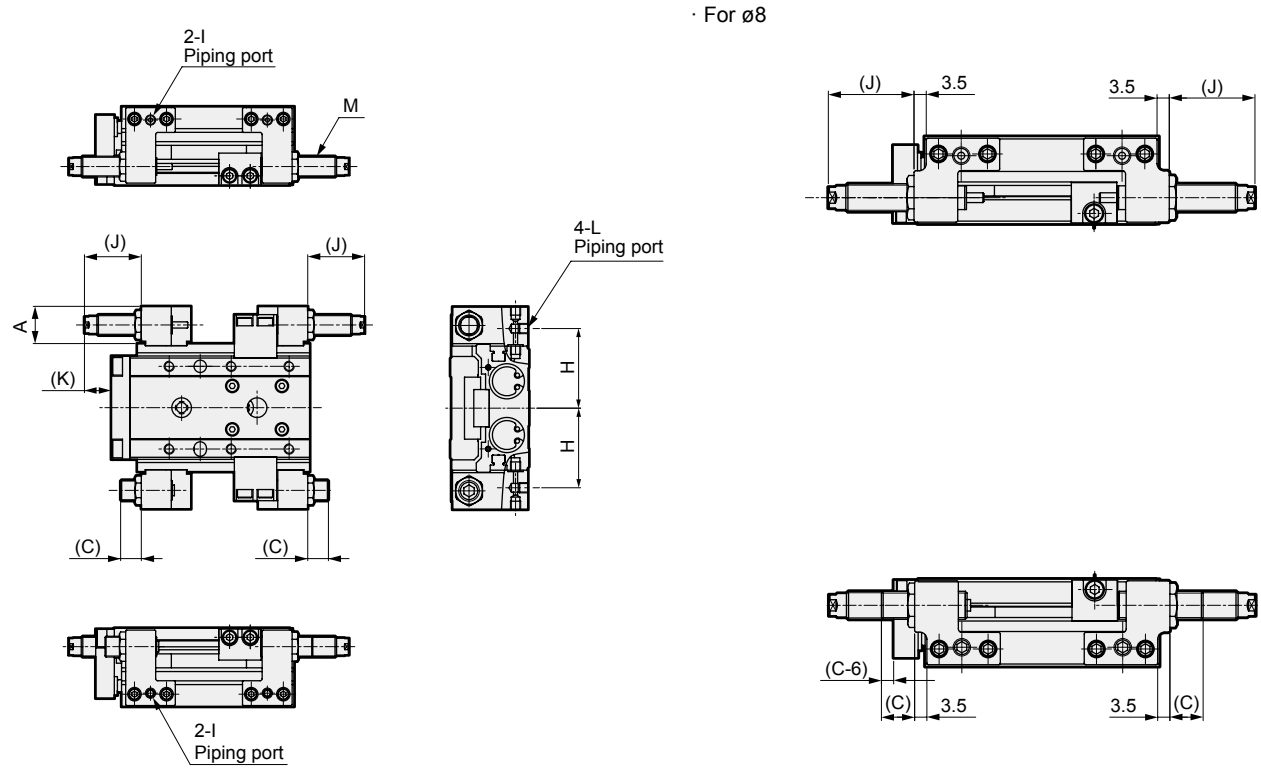

*1: F, G, H, I and L dimensions are only for the types with port on the stopper (S*D*, A*D*W*, W3** to W6**, C*D*).
2: For one side mixed type stopper mix (C), refer to the stroke adjusting stopper (S*) and shock absorber stopper (A*).
*3: S3** to S6**, A3** to A6**W*, W3** to W6**, C** are not available for the position locking.
4: Dimension C is that of adjustable stroke range 15 mm for two-sided combined double stopper (W).

Code / Bore size (mm)	A	B	C Adjustable stroke range 5 mm	C 15 mm	C 25 mm	D	E	F	G	H	I	J	K	L	Shock absorber stopper adjustable stroke range (one side)	M
ø6	14	19.9	11	21	-	4	1	13.5	10.5	24	M3 depth 3	20.5	9	M3 depth 3	9	M8×0.75
ø8	15.6	24.5	9.5	19.5	-	0.5	0.5	11	11	27.3	M5 depth 4	24.5	15.5	M5 depth 4	13.5	M8×0.75
ø12	15.5	29	12	22	32	1	1	13	13	31	M5 depth 4	24.5	12	M5 depth 4	14.5	M8×0.75
ø16	18	37	10	20	30	2	1	14	13	38.5	M5 depth 4	27.5	14	M5 depth 4	15	M10×1
ø20	20.5	45.5	14.5	24.5	34.5	4	2.5	20.5	19	47	Rc1/8	27.5	9.5	M5 depth 4	13	M12×1
ø25	20.5	57	11.5	21.5	31.5	2.5	2.5	19	19	54.5	Rc1/8	24.5	8	M5 depth 4	10	M12×1

Dimensions: Option

● With buffer (B, BL)

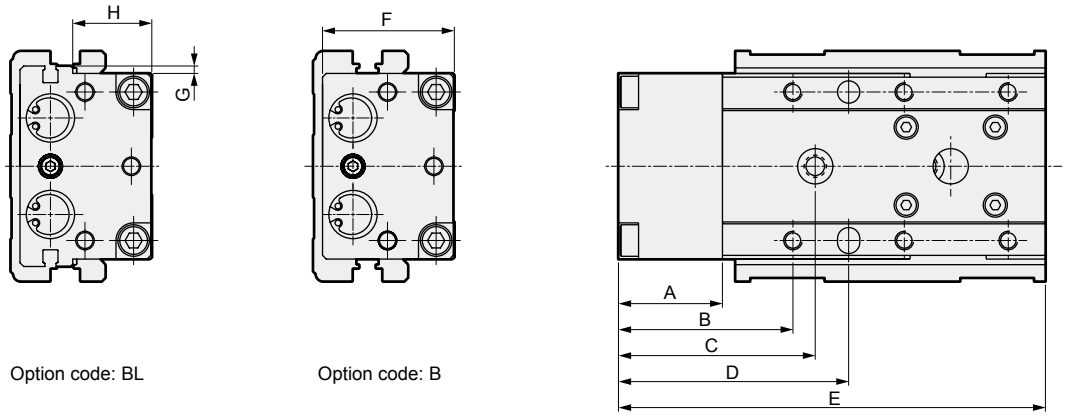

Option code: BL

Option code: B

Code / Bore size (mm)	A	B	C Stroke length (mm) 10	20	30	40	50	75	100	125	150	D
ø6	22.5	34	45	45	42.5	43.5	45	-	-	-	-	41.5
ø8	21.5	34.5	42.5	42.5	42.5	41	42.5	39.5	-	-	-	44.5
ø12	27	44	55.5	55.5	55.5	54	50	52.5	65	-	-	56.5
ø16	28	47	53	53	53	64.5	54.5	58	56	68	-	62
ø20	31	52	65	65	65	71	69	66	66	73	71	69.5
ø25	34	55	65.5	65.5	65.5	68.5	83.5	83	78	68	83	72.5

Code / Bore size (mm)	E Stroke length (mm) 10	20	30	40	50	75	100	125	150	F	G	H
ø6	82.5	82.5	92.5	112.5	122.5	-	-	-	-	20	3.5	11.2
ø8	80.5	80.5	90.5	109.5	119.5	144.5	-	-	-	23.5	3.2	13.5
ø12	109	109	109	119	129	163	188	-	-	29	3.2	16
ø16	115	115	115	125	135	177	202	227	-	35.5	1	21.3
ø20	130.5	130.5	130.5	140.5	150.5	187	212	237	262	45.5	4	24.5
ø25	145.5	145.5	145.5	155.5	165.5	211	236	261	286	56	-	-

*1 : The dimensions not listed are the same as those of the standard.
*2 : When using rear piping, refer to the cautions of 1. Common; when piping on page 131.

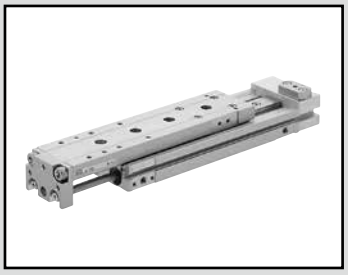

Linear slide cylinder Double acting/position locking

LCR-Q Series

● Bore size: ø8/ø12/ø16/ø20/ø25

JIS symbol

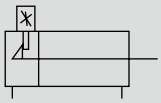

Specifications

Item		LCR-Q				
Bore size mm		ø8	ø12	ø16	ø20	ø25
Actuation		Double acting				
Working fluid		Compressed air				
Max. working pressure MPa		0.7 (≈100 psi, 7 bar)				
Min. working pressure MPa		0.15 (≈22 psi, 1.5 bar)				
Proof pressure MPa		1.05 (≈150 psi, 10.5 bar)				
Ambient temperature °C		-10 (14°F) to 60 (140°F) (no freezing)				
Port size	Main body side	M5			Rc1/8	
	Main body back	None				
Stroke tolerance mm		$^{+2.0}_{0}$ (*1)				
Working piston speed mm/s		50 to 500				
Cushion		With rubber cushion				
Position locking mechanism		Head side				
Holding force N		At PULL, Max. thrust (at 0.7 MPa (≈100 psi, 7 bar)) × 0.7				
Lubrication		Not required (use turbine oil class 1 ISO VG32 if necessary for lubrication)				
Allowable absorbed energy J		Refer to Table 3 on page 122.				

*1: Note that there will be a slight gap between the end plate and floating bush if no stopper is attached.
*2: The stroke adjusting stopper for 0.3 MPa and over working pressure is the metal sealing.

Stroke length

Bore size (mm)	Standard stroke length (mm)
ø8	10, 20, 30, 40, 50, 75
ø12	10, 20, 30, 40, 50, 75, 100
ø16	10, 20, 30, 40, 50, 75, 100, 125
ø20	10, 20, 30, 40, 50, 75, 100, 125, 150
ø25	10, 20, 30, 40, 50, 75, 100, 125, 150

Note: Products with stroke lengths other than the above are not available.

With buffer specifications

Specifications other than the below are same as the above common specifications.

Item		Description				
Bore size mm		ø8	ø12	ø16	ø20	ø25
Buffer stroke length mm		4	9		10	
Buffer part spring load	Set N	5	10	13	17	21
	Operating N	8	14	20	25	29

*1: In the type with buffer, adjusting the rod side stroke length will shorten the buffer stroke length and increase the spring load when set.
*2: Keep the buffer stroke length less than the stroke length above. Otherwise, malfunctions or damage may result.

Theoretical thrust table

Refer to page 123.

Switch specifications

● 1-color/2-color display

Item	Reed 2-wire				Proximity 2-wire		Proximity 3-wire		
	T0H/T0V		T5H/T5V		T2H/T2V	T2WH/T2WV	T3H/T3V	T3PH/T3PV	T3WH/T3WV
Applications	For programmable controller, relay		For programmable controller, relay, IC circuit (without indicator lamp), serial connection		Dedicated for programmable controller		For programmable controller, relay		
Output method	-		-		-		NPN output	PNP output	NPN output
Power supply voltage	-		-		-		10 to 28 VDC		
Load voltage	12/24 VDC	110 VAC	5/12/24 VDC	110 VAC	10 to 30 VDC	24 VDC ±10%	30 VDC or less		
Load current	5 to 50 mA	7 to 20 mA	50 mA or less	20 mA or less	5 to 20 mA		100 mA or less		50 mA or less
Indicator lamp	LED (Lit when ON)		Without indicator lamp		LED (Lit when ON)	Red/green LED (Lit when ON)	LED (Lit when ON)	Yellow LED (Lit when ON)	Red/green LED (Lit when ON)
Leakage current	0 mA				1 mA or less		10 μA or less		
Weight g	1 m:18 3 m:49 5 m:80								

Item	Proximity 2-wire	Proximity 3-wire	Proximity 2-wire		Proximity 3-wire		
	F2S	F3S	F2H/F2V	F2YH/F2YV	F3H/F3V	F3PH/F3PV (made to order)	F3YH/F3YV
Applications	Dedicated for programmable controller	For programmable controller, relay	Dedicated for programmable controller		For programmable controller, relay		
Output method	-	NPN output	-		NPN output	PNP output	NPN output
Power supply voltage	-	10 to 28 VDC	-		10 to 28 VDC	4.5 to 28 VDC	10 to 28 VDC
Load voltage	10 to 30 VDC	30 VDC or less	10 to 30 VDC	24 VDC ±10%	30 VDC or less		
Load current	5 to 20 mA	50 mA or less	5 to 20 mA		50 mA or less		
Indicator lamp	LED (Lit when ON)		Yellow LED (Lit when ON)	Red/green LED (Lit when ON)	Yellow LED (Lit when ON)		Red/green LED (Lit when ON)
Leakage current	1 mA or less	10 μA or less	1 mA or less		10 μA or less		
Weight g	1 m:10 3 m:29						

*1 : Refer to Ending Page 1 for detailed switch specifications and dimensions.
*2 : Switches other than the above models, such as switches with connectors, are also available. Refer to Ending Page 1.
*3 : The max. load current is 20 mA at 25°C. The current is lower than 20 mA if the operating ambient temperature around the switch is higher than 25°C. (5 to 10 mA at 60°C)
*4 : The F type switch uses a bend-resistant lead wire.

Cylinder weight

● Position locking (Unit: g)

Bore size (mm)	Basic Stroke length (mm)								
	10	20	30	40	50	75	100	125	150
ø8	260	260	280	330	360	420	-	-	-
ø12	415	425	425	465	495	625	715	-	-
ø16	670	680	680	730	790	1,020	1,150	1,290	-
ø20	1,150	1,160	1,170	1,250	1,340	1,640	1,850	2,060	2,270
ø25	2,000	2,020	2,030	2,140	2,240	2,730	3,000	3,270	3,540

● Additional weight of options (Unit: g)

Bore size (mm)	Option/stopper code		With buffer
	S1/S2	A1/A2	B/BL
ø8	40	50	40
ø12	70	80	70
ø16	110	120	80
ø20	170	180	150
ø25	290	300	320

Specifications for rechargeable battery

(Catalog No. CC-1226A)

LCR - ··· - P4*

● Design compatible with rechargeable battery manufacturing process.

* Contact CKD for details.

LCM
LCR
LCG
LCW
LCX
STM
STG
STS/STL
STR2
UCA2
ULK*
JSK/M2
JSG
JSC3/JSC4
USSD
UFCD
USC
UB
JSB3
LMB
LML
HCM
HCA
LBC
CAC4
UCAC2
CAC-N
UCAC-N
RCS2
RCC2
PCC
SHC
MCP
GLC
MFC
BBS
RRC
GRC
RV3*
NHS
HRL
LN
Hand
Chuk
MecHnd/Chuk
ShkAbs
FJ
FK
SpdContr
Ending

How to order

Without switch (built-in magnet for switch)

LCR-Q - 8 - 40 ——— S202 DTBL

With switch (built-in magnet for switch)

LCR-Q - 12 - 40 - F2H* - R - S202 DTBL

- LCR-Q: Model No.
- 12: Ⓐ Bore size
- 40: Ⓑ Stroke length
- F2H*: Ⓒ Switch model No.
- R: Ⓓ Switch quantity
- S202: Ⓔ Stopper
- DTBL: Ⓕ Option

Code	Description
Ⓐ Bore size	
8	ø8
12	ø12
16	ø16
20	ø20
25	ø25

Ⓑ Stroke length (mm)

		Bore size (ø)				
		8	12	16	20	25
10	10	●	●	●	●	●
20	20	●	●	●	●	●
30	30	●	●	●	●	●
40	40	●	●	●	●	●
50	50	●	●	●	●	●
75	75	●	●	●	●	●
100	100		●	●	●	●
125	125			●	●	●
150	150				●	●

Ⓒ Switch model No.

Axial lead wire	Radial lead wire	Contact	Voltage AC	Voltage DC	Indicator lamp	Lead wire	Bore size ø8	ø12	ø16	ø20	ø25
-	**F2S***	Proximity		●	1-color display	2-wire	●	●			
-	**F3S***	Proximity		●	1-color display	3-wire	●	●			
F2H*	**F2V***	Proximity		●	1-color display	2-wire	●	●			
F3H*	**F3V***	Proximity		●	1-color display	3-wire	●	●			
F3PH*	**F3PV***	Proximity		●	1 color display (PNP output) (made to order)	3-wire	●	●			
F2YH*	**F2YV***	Proximity		●	2-color display	2-wire	●	●			
F3YH*	**F3YV***	Proximity		●	2-color display	3-wire	●	●			
T0H*	**T0V***	Reed	●	●	1-color display	2-wire			●	●	●
T5H*	**T5V***	Reed	●	●	no indicator lamp	2-wire			●	●	●
T2H*	**T2V***	Proximity		●	1-color display	2-wire			●	●	●
T3H*	**T3V***	Proximity		●	1-color display	3-wire			●	●	●
T3PH*	**T3PV***	Proximity		●	1-color display (PNP output)	3-wire			●	●	●
T2WH*	**T2WV***	Proximity		●	2-color display	2-wire			●	●	●
T3WH*	**T3WV***	Proximity		●	2-color display	3-wire			●	●	●

*** Lead wire length**

Blank	1 m (standard)			●		
3	3 m (option)			●		
5	5 m (option)				●	

Ⓓ Switch quantity

R	1 on rod side
H	1 on head side
D	2

Ⓔ Stopper

Blank	No option	
S Stroke adjusting stopper		*11
S1**	Stopper position ①	Stopper mount position
S2**	Stopper position ②	Stopper mount position
A Shock absorber stopper		
A1**	Stopper position ①	Stopper mount position
A2**	Stopper position ②	Stopper mount position
W Two-sided combined double stopper (shock absorber stopper, metal stopper)		*10
W1**	A1 + metal stopper	Stopper mount position
W2**	A2 + metal stopper	Stopper mount position

** part Adjustable stroke range

	Protruding end	Stopper model No. S	A	W
Blank	5 mm	●	-	-
02	15 mm	●		
03	25 mm	●		

Ⓕ Option

Blank	Port on the stopper: without port	
D	Port on the stopper: side and bottom ports	*2, *5, *9
Blank	Stopper block material: steel	
T	Stopper block material: steel (nitriding)	*5
B With buffer		***6, *7**
B	Without switch groove	
BL	With switch groove	

Precautions for model No. selection

*1 : For the adjustable stroke range with a shock absorber stopper, refer to the stopper dimensions table on page 82.
*2 : For the port position, refer to the stopper dimensions on page 82.
*3 : The port position of the standard without stopper is the ① side in the figure below.
*4 : Combination of the stroke adjusting stopper and shock absorber stopper is made to order.
*5 : Can be selected for the type with stopper only.
*6 : A switch for buffer should be purchased separately. Refer to how to order a switch on page 88.
*7 : Refer to the selection table on page 87 for combinations of options.
*8 : A1** and A2** of ø8 with 10 mm stroke length or less and ø12 to ø25 with 20 mm stroke length or less are made to order since adjustment is not possible with the standard stopper.
*9 : Cannot be selected when choosing both-sided combined use (W).
*10 : The adjustable stroke range when choosing two-sided combined (W) is ø8: 13.5 mm, ø12: 14.5 mm, ø16: 15 mm, ø20: 13 mm, ø25: 10 mm.
*11 : The stroke adjusting stopper for 0.3 MPa and over working pressure is the metal sealing.

[Example of model No.]

LCR-Q-12-40-F2H-R-A1DT

Model: Linear slide cylinder Double acting/position locking LCR-Q

- Ⓐ Bore size : ø12
- Ⓑ Stroke length : 40 mm
- Ⓒ Switch model No. : Proximity/2-wire Axial lead wire
- Ⓓ Switch quantity : 1 on rod side
- Ⓔ Stopper : Shock absorber stopper stopper position ①
- Ⓕ Option : With side and bottom ports Material, steel (nitriding)

● Stopper position

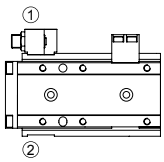

LCM
LCR
LCG
LCW
LCX
STM
STG
STS/STL
STR2
UCA2
ULK*
JSK/M2
JSG
JSC3/JSC4
USSD
UFCD
USC
UB
JSB3
LMB
LML
HCM
HCA
LBC
CAC4
UCAC2
CAC-N
UCAC-N
RCS2
RCC2
PCC
SHC
MCP
GLC
MFC
BBS
RRC
GRC
RV3*
NHS
HRL
LN
Hand
Chuk
MecHnd/Chuk
ShkAbs
FJ
FK
SpdContr
Ending

Stopper model No. selection method

1 Stopper combination table

Model No.-[①Stopper] [②Stopper position] [③] Example) LCR-Q-8-40-[S] [2] 06

		Stroke adjustable (one side)	Shock absorber (one side)	Two-sided combined double stopper
		Stopper model No. [①]		
		[S]	[A]	[W]
Stopper position model No. [②]	[1]	[S1] 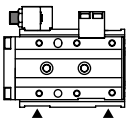	[A1] 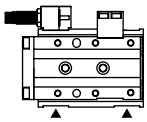	[W1] 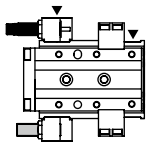
	[2]	[S2] 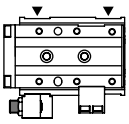	[A2] 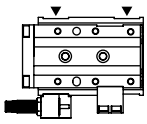	[W2] 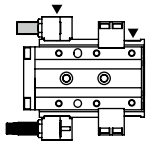

▲ shows the piping direction.
If two-sided combined (W) is selected, the stopper bracket comes with piping on both sides, ▲ (piping direction) and the reverse side stopper bracket comes with a plug.

■: Shock absorber stopper
■: Stroke adjusting stopper (adjusting range 5 mm)
□: Metal adjusting stopper (adjusting range 15 mm)

2 Stopper combination table

Model No.-[①②Stopper][③Adjustable stroke range]

Example) LCR-Q-8-40-S1[02]

For stroke adjusting stopper -S

		Stopper adjusting range	Stopper model No. [① ②]	
		Protruding end	[S1]	[S2]
Adjustable stroke range model No. [③]	Blank	5 mm	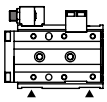 [S1]	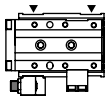 [S2]
	[02]	15 mm	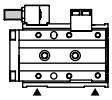 [S102]	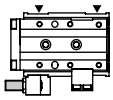 [S202]
	[03]	25 mm	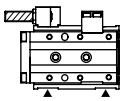 [S103]	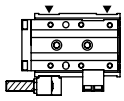 [S203]

■: Stroke adjusting stopper (adjusting range 5 mm)
□: Stroke adjusting stopper (adjusting range 15 mm)
▨: Stroke adjusting stopper (adjusting range 25 mm)

▲ shows the piping direction.
Cannot be selected for shock absorber [A] and two-sided combined [W].

LCR-Q position locking selection table

(Combination with stroke adjusting stopper, shock absorber stopper)

●: Available — : Not available

Option code		Stroke adjusting stopper						Shock absorber stopper		Two-sided combined double stopper	
Bore size	Stroke length	S1			S2			A1	A2	W1	W2
		Adjustment length code									
		Blank	02	03	Blank	02	03				
ø8	10	●	—	—	●	—	—	—	—	—	—
	20 or more	●	●	—	●	●	—	●	●	●	●
ø12 to ø25	10	●	—	—	●	—	—	—	—	—	—
	20	●	●	—	●	●	—	—	—	—	—
	30 or more	●	●	●	●	●	●	●	●	●	●

The table above also applies to a combination with option code D (with port on the stopper) or T (alloy steel stopper block (nitriding)).

LCM
LCR
LCG
LCW
LCX
STM
STG
STS/STL
STR2
UCA2
ULK*
JSK/M2
JSG
JSC3/JSC4
USSD
UFCD
USC
UB
JSB3
LMB
LML
HCM
HCA
LBC
CAC4
UCAC2
CAC-N
UCAC-N
RCS2
RCC2
PCC
SHC
MCP
GLC
MFC
BBS
RRC
GRC
RV3*
NHS
HRL
LN
Hand
Chuk
MecHnd/Chuk
ShkAbs
FJ
FK
SpdContr
Ending

How to order switch

For ø8 to ø12

SW - F2H

Switch model No.
(Item Ⓒ on page 86)

For ø16 to ø25

SW - T2H3

Switch model No.
(Item Ⓒ on page 86)

● Buffer part

SW - F 2 V 3

Output

Output	
2	DC 2-wire proximity
3	DC 3-wire proximity

Radial lead wire

Lead wire length	
Blank	1 m (standard)
3	3 m (option)

How to order a stopper set

● Set of a stopper and stroke adjusting stopper or shock absorber stopper
● Use it when changing from the standard to the stroke adjusting stopper or shock absorber stopper.

LCR - 12 - S 2 D - S02

Bore size
(Item Ⓐ on page 86)

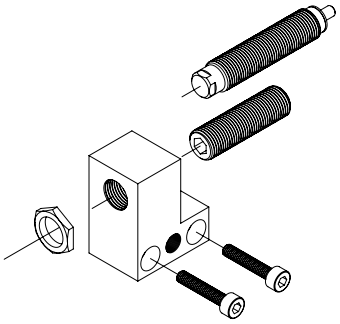

Ⓐ Stopper	
S	Stroke adjusting stopper
A	Shock absorber stopper

Ⓑ Stopper installation position *1	
1	Stopper position ①
2	Stopper position ②

Ⓒ Port on the stopper	
Blank	Without port
D	With side and bottom ports

Ⓓ Adjustable stroke length *2/*3	
Blank	Adjustable stroke range 5 mm
S02	Adjustable stroke range 15 mm
S03	Adjustable stroke range 25 mm

*1: The adjustable stroke length changes depending on the stroke; see the table below.
*2: ø8 is not available for S03.
*3: Cannot be selected for the shock absorber stopper "A".

Note) Bottom port is plug-sealed.
When using the bottom port with ø20 and 25, buy a plug kit (LCR-20-N 2 pieces/set) and seal the side surface ports before using.

Precautions when purchasing the stopper set

Note that the adjustable stroke length will be as shown on the right according to the stroke length.

—: Not applicable

Model No. code	Option code		Discrete stroke adjusting stopper Adjustable stroke length (mm)		
	Bore size	Stroke length	-5	-15	-25
LCR-Q Series	ø8	10	S02	—	—
		20 or more	Blank	S02	—
	ø12 to ø25	10	S03	—	—
		20	S02	S03	—
		30 or more	Blank	S02	S03

● Stopper set weight (Unit: g)

Stopper	S1,S2			A1,A2
Port on the stopper	Blank, D			
Adjustable stroke length	Blank	S02	S03	Blank
ø8	21	25	—	27
ø12	28	31	34	33
ø16	42	47	52	49
ø20	77	85	92	86
ø25	87	94	101	95

LCM
LCR
LCG
LCW
LCX
STM
STG
STS/STL
STR2
UCA2
ULK*
JSK/M2
JSG
JSC3/JSC4
USSD
UFCD
USC
UB
JSB3
LMB
LML
HCM
HCA
LBC
CAC4
UCAC2
CAC-N
UCAC-N
RCS2
RCC2
PCC
SHC
MCP
GLC
MFC
BBS
RRC
GRC
RV3*
NHS
HRL
LN
Hand
Chuk
MecHnd/Chuk
ShkAbs
FJ
FK
SpdContr
Ending

How to order discrete stopper bracket

● Used when changing between □1 and □2 or when changing to the stopper with port.
□:SA

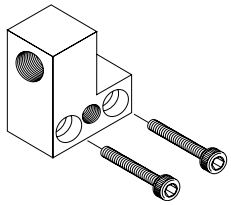

LCR - 12 - STB 1 D

- 12: Bore size (Item Ⓐ on page 86)
- 1: Ⓐ Stopper installation position
- D: Port on the stopper

Ⓐ Stopper installation position	
1	Stopper position ①
2	Stopper position ②

Ⓑ Port on the stopper	
Blank	Without port
D	With side and bottom ports

Note) Bottom port is plug-sealed.
When using the bottom port with ø20 and 25, buy a plug kit (LCR-20-N 2 pieces/set) and seal the side surface ports before using.

● Stopper bracket weight (Unit: g)

Stopper installation position	1,2
Port on the stopper	Blank, D
ø8	14
ø12	20
ø16	29
ø20	53
ø25	62

How to order discrete stroke adjusting stopper

● Hexagon socket set screw with urethane
● Use when changing the adjustable stroke range or when using a custom stroke length.

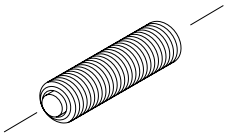

LCR - 12 - S02

- 12: Bore size (Item Ⓐ on page 86)
- S02: Ⓐ Adjustable stroke range

Ⓐ Adjustable stroke range	
S01	Single side 5 mm (standard)
S02	Single side 15 mm
S03	Single side 25 mm

Select S01, S02 or S03 in Ⓐ.
Note: S03 is not available for ø8.
Some models may not be available and adjustable stroke range may differ from the above depending on the model No.

Precautions when purchasing discrete stopper

Note that the combination will be as shown on the right according to the stroke length and adjustable stroke length.

— : Not available

Model No. code	Option code		Discrete stroke adjusting stopper Adjustable stroke length (mm)			Discrete shock absorber stopper
	Bore size	Stroke length	-5	-15	-25	
LCR Series -S1, S2 -A1, A2	ø8	10	S02	—	—	—
		20 or more	S01	S02	—	A01
	ø12 to ø25	10	S03	—	—	—
		20	S02	S03	—	—
		30 or more	S01	S02	S03	A01

● Discrete stroke adjusting stopper weight (Unit: g)

Adjustable stroke range	S01	S02	S03
ø8	7	10	—
ø12	7	11	14
ø16	11	16	22
ø20	22	30	37
ø25	23	30	37

LCM
LCR
LCG
LCW
LCX
STM
STG
STS/STL
STR2
UCA2
ULK*
JSK/M2
JSG
JSC3/JSC4
USSD
UFCD
USC
UB
JSB3
LMB
LML
HCM
HCA
LBC
CAC4
UCAC2
CAC-N
UCAC-N
RCS2
RCC2
PCC
SHC
MCP
GLC
MFC
BBS
RRC
GRC
RV3*
NHS
HRL
LN
Hand
Chuk
MecHnd/Chuk
ShkAbs
FJ
FK
SpdContr
Ending

How to order discrete shock absorber stopper

- Shock absorber set
- Use when changing from the stroke adjusting stopper or shock absorber stopper.

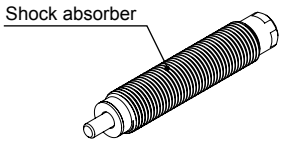

LCR - 12 - A01

Bore size
(Item Ⓐ on page 86)

Note: Some models may not be available depending on the specifications. Refer to page 86.
Note: For the adjustable stroke range with a shock absorber stopper, refer to page 86.

Applicable shock absorber model No.

Model	Shock absorber model No.	Weight (g)
LCR-8	SKL-0805	12
LCR-12	SKL-0805	12
LCR-16	SKL-1006	19
LCR-20	SKL-1208	31
LCR-25	SKL-1208	31

How to order discrete stopper block

- Use it when changing from the standard to the stroke adjusting stopper or shock absorber stopper.

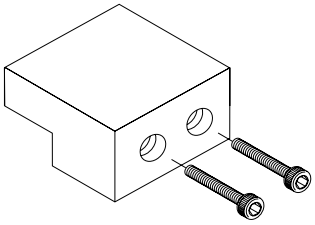

LCR - 12 - SB1 T

Bore size
(Item Ⓐ on page 86)

Ⓐ Stopper block	
SB1	ø8: For 30 mm stroke length or less
	ø12 to ø25: For 50 mm stroke length or less
SB2	ø8: For 40 mm stroke length or more
	ø12 to ø25: For 75 mm stroke length or more

Ⓑ Material	
Blank	Stopper block material: steel
T	Stopper block material: steel (nitriding)

Internal structure and parts list

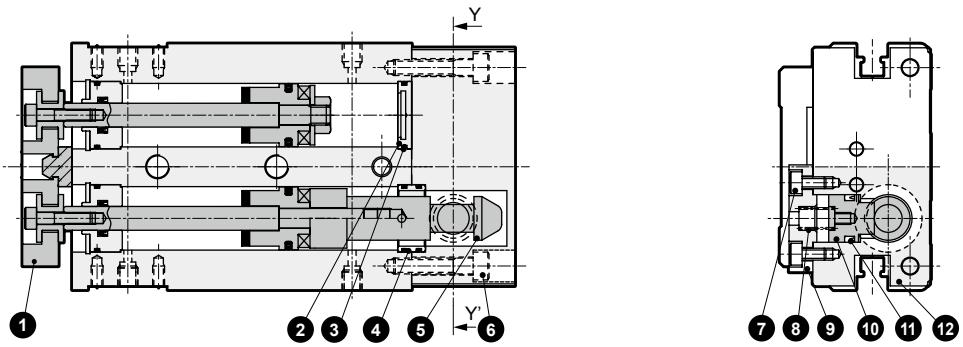

Y-Y' section

Parts list

No.	Part name	Material	Remarks
1	End plate	Aluminum alloy	Alumite
2	Cover	Aluminum alloy	
3	Gasket	Nitrile rubber	
4	Joint ring	ø8: Stainless steel ø12 to 25: Aluminum alloy	ø12 to ø25: Chromate
5	Sleeve	Carbon steel	Nitriding
6	Hexagon socket head cap screw	Alloy steel	Zinc chromate
7	Hexagon socket head cap screw	Alloy steel	Zinc chromate
8	Coil spring	Steel	
9	Stopper cover	Aluminum alloy	Alumite
10	Stopper piston	Carbon steel	Nitriding
11	Stopper packing	Nitrile rubber	
12	Head cover	Aluminum alloy	Alumite

Repair parts list

Bore size (mm)	Kit No.	Repair parts No.	
		Repair parts for position locking	Basic parts are repair parts
ø8	LCR-Q-8K	11	4 5 9 11 17 21
ø12	LCR-Q-12K		
ø16	LCR-Q-16K		
ø20	LCR-Q-20K		
ø25	LCR-Q-25K		

Note: The repair part numbers for the base section correspond to those in the double acting/single rod parts list on page 67.

LCM
LCR
LCG
LCW
LCX
STM
STG
STS/STL
STR2
UCA2
ULK*
JSK/M2
JSG
JSC3/JSC4
USSD
UFCD
USC
UB
JSB3
LMB
LML
HCM
HCA
LBC
CAC4
UCAC2
CAC-N
UCAC-N
RCS2
RCC2
PCC
SHC
MCP
GLC
MFC
BBS
RRC
GRC
RV3*
NHS
HRL
LN
Hand
Chuk
MecHnd/Chuk
ShkAbs
FJ
FK
SpdContr
Ending

Dimensions CAD

● LCR-Q

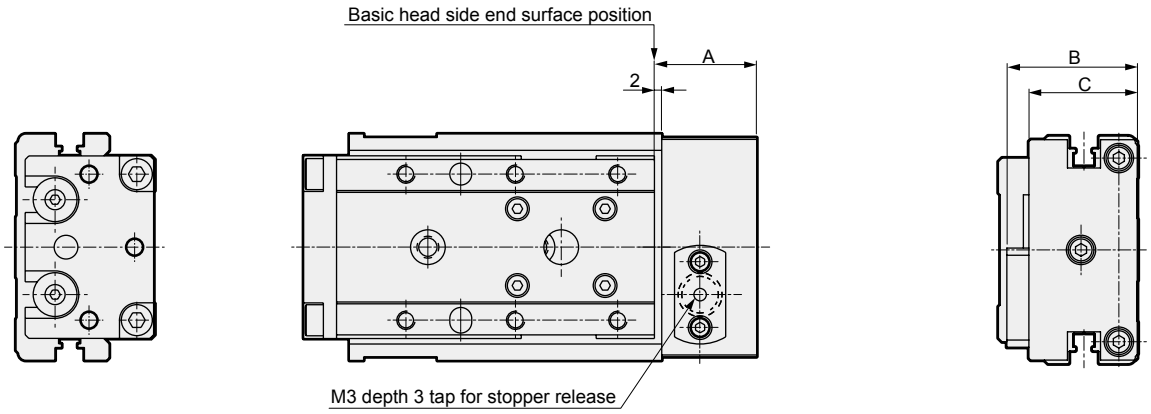

● LCR-Q-*-*-B (with buffer)

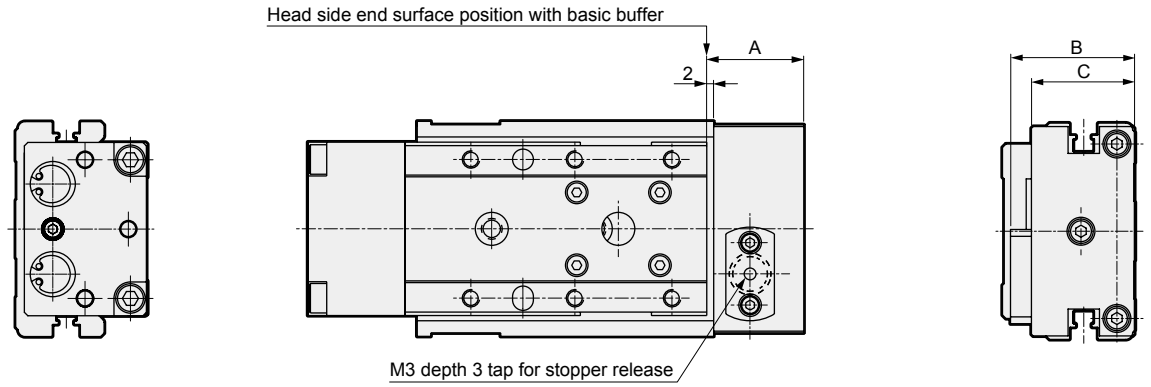

Code / Bore size (mm)	A	B	C
ø8	23	28	22
ø12	24.5	30.5	24.5
ø16	28	35.7	29.7
ø20	30	39	33
ø25	30	48	42

Note: Dimensions other than those listed above are the same as those of double acting/single rod.

MEMO

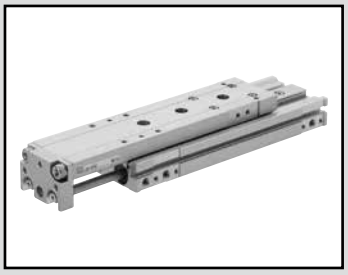

Linear slide cylinder Double acting/single rod clean-room specifications

LCR-P7* Series

● Bore size: ø6/ø8/ø12/ø16/ø20/ø25

JIS symbol 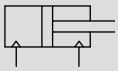

Specifications

Item		LCR-P7*					
Bore size mm		ø6	ø8	ø12	ø16	ø20	ø25
Actuation		Double acting					
Working fluid		Compressed air					
Max. working pressure MPa		0.7 (≈100 psi, 7 bar)					
Min. working pressure MPa		0.15 (≈22 psi, 1.5 bar)					
Proof pressure MPa		1.05 (≈150 psi, 10.5 bar)					
Ambient temperature °C		-10 (14°F) to 60 (140°F) (no freezing)					
Port size	Main body side	M3	M5			Rc1/8	
	Main body back	-	M3			M5	Rc1/8
Pressure relief port size		M3	M5			Rc1/8	
Stroke tolerance mm		$^{+2.0}_{0}$ (*1)					
Working piston speed mm/s		50 to 500					
Cushion		With rubber cushion					
Lubrication		Not available					
Allowable absorbed energy J		Refer to Table 3 on page 122.					

*1: Note that there will be a slight gap between the end plate and floating bush if no stopper is attached.
*2: The stroke adjusting stopper for 0.3 MPa and over working pressure is the metal sealing.

Stroke length

Bore size (mm)	Standard stroke length (mm)
ø6	10, 20, 30, 40, 50
ø8	10, 20, 30, 40, 50, 75
ø12	10, 20, 30, 40, 50, 75, 100
ø16	10, 20, 30, 40, 50, 75, 100, 125
ø20	10, 20, 30, 40, 50, 75, 100, 125, 150
ø25	10, 20, 30, 40, 50, 75, 100, 125, 150

Note: Products with stroke lengths other than the above are not available.

Theoretical thrust table

Refer to page 123.

LCM
LCR
LCG
LCW
LCX
STM
STG
STS/STL
STR2
UCA2
ULK*
JSK/M2
JSG
JSC3/JSC4
USSD
UFCD
USC
UB
JSB3
LMB
LML
HCM
HCA
LBC
CAC4
UCAC2
CAC-N
UCAC-N
RCS2
RCC2
PCC
SHC
MCP
GLC
MFC
BBS
RRC
GRC
RV3*
NHS
HRL
LN
Hand
Chuk
MecHnd/Chuk
ShkAbs
FJ
FK
SpdContr
Ending

Switch specifications

● 1-color/2-color display

Item	Reed 2-wire				Proximity 2-wire		Proximity 3-wire		
	T0H/T0V		T5H/T5V		T2H/T2V	T2WH/ T2WV	T3H/ T3V	T3PH/ T3PV	T3WH/ T3WV
Applications	For programmable controller, relay		For programmable controller, relay, IC circuit (without indicator lamp), serial connection		Dedicated for programmable controller		For programmable controller, relay		
Output method	-		-		-		NPN output	PNP output	NPN output
Power supply voltage	-		-		-		10 to 28 VDC		
Load voltage	12/24 VDC	110 VAC	5/12/24 VDC	110 VAC	10 to 30 VDC	24 VDC ±10%	30 VDC or less		
Load current	5 to 50 mA	7 to 20 mA	50 mA or less	20 mA or less	5 to 20 mA		100 mA or less		50 mA or less
Indicator lamp	LED (Lit when ON)		Without indicator lamp		LED (Lit when ON)	Red/green LED (Lit when ON)	LED (Lit when ON)	Yellow LED (Lit when ON)	Red/green LED (Lit when ON)
Leakage current	0 mA				1 mA or less		10 μA or less		
Weight g	1 m:18 3 m:49 5 m:80								

Item	Proximity 2-wire	Proximity 3-wire	Proximity 2-wire		Proximity 3-wire		
	F2S	F3S	F2H/F2V	F2YH/ F2YV	F3H/F3V	F3PH/F3PV (Made to order)	F3YH/ F3YV
Applications	Dedicated for programmable controller	For programmable controller, relay	Dedicated for programmable controller		For programmable controller, relay		
Output method	-	NPN output	-		NPN output	PNP output	NPN output
Power supply voltage	-	10 to 28 VDC	-		10 to 28 VDC	4.5 to 28 VDC	10 to 28 VDC
Load voltage	10 to 30 VDC	30 VDC or less	10 to 30 VDC	24 VDC ±10%	30 VDC or less		
Load current	5 to 20 mA	50 mA or less	5 to 20 mA		50 mA or less		
Indicator lamp	LED (Lit when ON)		Yellow LED (Lit when ON)	Red/green LED (Lit when ON)	Yellow LED (Lit when ON)		Red/green LED (Lit when ON)
Leakage current	1 mA or less	10 μA or less	1 mA or less		10 μA or less		
Weight g	1 m:10 3 m:29						

*1 : Refer to Ending Page 1 for detailed switch specifications and dimensions.
*2 : Switches other than the above models, such as switches with connectors, are also available. Refer to Ending Page 1.
*3 : The max. load current is 20 mA at 25°C. The current is lower than 20 mA if the operating ambient temperature around the switch is higher than 25°C. (5 to 10 mA at 60°C)
*4 : The F type switch uses a bend-resistant lead wire.

Cylinder weight

● Clean-room specifications (Unit: g)

Bore size (mm)	Basic Stroke length (mm)								
	10	20	30	40	50	75	100	125	150
ø6	130	130	150	180	200	-	-	-	-
ø8	220	220	240	290	320	380	-	-	-
ø12	400	410	410	450	480	610	700	-	-
ø16	620	630	630	680	740	970	1,100	1,240	-
ø20	1,160	1,170	1,180	1,260	1,350	1,650	1,860	2,070	2,280
ø25	2,010	2,030	2,040	2,150	2,250	2,740	3,010	3,280	3,550

● Weight of variation/option (stopper) (Unit: g)

Bore size (mm)	Option/stopper code	
	S1 to S4	S5/S6
ø6	30	40
ø8	40	60
ø12	70	100
ø16	110	150
ø20	170	250
ø25	290	380

How to order

Without switch (built-in magnet for switch)

LCR - 8 - 40 ——— S506 DT P72

With switch (built-in magnet for switch)

LCR - 12 - 40 - F2H* - R - S506 DT P72

- LCR: Model No.
- 12: Ⓐ Bore size
- 40: Ⓑ Stroke length
- F2H*: Ⓒ Switch model No.
- R: Ⓓ Switch quantity
- S506: Ⓔ Stopper
- DT: Ⓕ Option
- P72: Ⓖ Clean-room specifications

⚠ Precautions for model No. selection

*1 : For the port position, refer to the stopper dimensions on page 110.
*2 : The port positions of the standard without stopper are ① and ③ in the figure below.
*3 : Can be selected for the type with stopper only.
*4 : When two switches are necessary for the type with S*** of ø6 to ø8 with 30 mm stroke length or less, select the F □ H type switch.
*5 : Select when using rear piping.
*6 : The stroke adjusting stopper for 0.3 MPa and over working pressure is the metal sealing.
*7 : When changing the stopper position from the head side to the rod side, the stopper must be purchased separately according to the stroke length and adjustable stroke length. Refer to "Precautions when purchasing discrete stopper" on page 65.
Adjustable stroke lengths of 15 mm and 25 mm may not be possible depending on the stroke length.

[Example of model No.]

LCR-12-40-F2H*-R-S1DT-P72

Model: Linear slide cylinder Double acting/single rod (clean-room specifications) LCR-P7*

- Ⓐ Bore size : ø12
- Ⓑ Stroke length : 40 mm
- Ⓒ Switch model No. : Proximity/2-wire Axial lead wire
- Ⓓ Switch quantity : 1 on rod side
- Ⓔ Stopper : Stroke adjusting stopper Stopper position ①
- Ⓕ Option : Port on the stopper: Side and bottom ports Stopper block material: steel (nitriding)
- Ⓖ Clean-room specifications : Exhaust port

● Stopper position

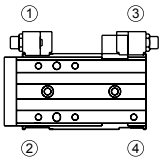

Code	Description
Ⓐ Bore size	
6	ø6
8	ø8
12	ø12
16	ø16
20	ø20
25	ø25

Ⓑ Stroke length (mm)

		Bore size (ø)					
		6	8	12	16	20	25
10	10	●	●	●	●	●	●
20	20	●	●	●	●	●	●
30	30	●	●	●	●	●	●
40	40	●	●	●	●	●	●
50	50	●	●	●	●	●	●
75	75		●	●	●	●	●
100	100			●	●	●	●
125	125				●	●	●
150	150					●	●

Ⓒ Switch model No.

Axial lead wire	Radial lead wire	Contact	Voltage AC	Voltage DC	Indicator lamp	Lead wire	Bore size ø6	ø8	ø12	ø16	ø20	ø25
-	F2S*	Proximity		●	1-color display	2-wire	●	●	●			
-	F3S*	Proximity		●	1-color display	3-wire	●	●	●			
F2H*	F2V*	Proximity		●	1-color display	2-wire	●	●	●			
F3H*	F3V*	Proximity		●	1-color display	3-wire	●	●	●			
F3PH*	F3PV*	Proximity		●	1 color display (PNP output) (made to order)	3-wire	●	●	●			
F2YH*	F2YV*	Proximity		●	2-color display	2-wire	●	●	●			
F3YH*	F3YV*	Proximity		●	2-color display	3-wire	●	●	●			
T0H*	T0V*	Reed	●	●	1-color display no indicator lamp	2-wire				●	●	●
T5H*	T5V*	Reed	●	●	1-color display no indicator lamp	2-wire				●	●	●
T2H*	T2V*	Proximity		●	1-color display	2-wire				●	●	●
T3H*	T3V*	Proximity		●	1-color display	3-wire				●	●	●
T3PH*	T3PV*	Proximity		●	1-color display (PNP output)	3-wire				●	●	●
T2WH*	T2WV*	Proximity		●	2-color display	2-wire				●	●	●
T3WH*	T3WV*	Proximity		●	2-color display	3-wire				●	●	●

Lead wire length

Blank	1 m (standard)	●
3	3 m (option)	●
5	5 m (option)	●

Ⓓ Switch quantity

R	1 on rod side	●
H	1 on head side	●
D	2	●

Ⓔ Stopper

Blank	No option		●
S Stroke adjusting stopper			
5 mm stroke adjustment on one side			*4
S1**	Stopper position ① (can be changed to ④)	Stopper installation position	●
S2**	Stopper position ② (can be changed to ③)	Stopper installation position	●
S3**	Stopper position ③ (can be changed to ②) *7	Stopper installation position	●
S4**	Stopper position ④ (can be changed to ①) *7	Stopper installation position	●
S5**	Stopper position ①,③	Stopper installation position	●
S6**	Stopper position ②,④	Stopper installation position	●

** part Adjustable stroke range ● Compatible with all. ▲ Compatible with some. *3

	Protruding end	Return end	
Blank	5 mm or none	5 mm or none	●
02	15 mm or none	15 mm or none	●
03	25 mm or none	25 mm or none	●
04	15 mm	5 mm	▲
05	25 mm	5 mm	▲
06	5 mm	15 mm	▲
07	5 mm	25 mm	▲

Ⓕ Option

Blank	Port on the stopper: without port	●
D	Port on the stopper: side and bottom ports	● *1, *3
Blank	Stopper block material: steel	●
T	Stopper block material: steel (nitriding)	● *3
Plug attached		
Blank	None	
N	With side piping port plug (not available for ø6, ø25)	*5

Ⓖ Clean-room specifications

	Structure
P72	Exhaust port
P73	Vacuum treatment

LCM
LCR
LCG
LCW
LCX
STM
STG
STS/STL
STR2
UCA2
ULK*
JSK/M2
JSG
JSC3/JSC4
USSD
UFCD
USC
UB
JSB3
LMB
LML
HCM
HCA
LBC
CAC4
UCAC2
CAC-N
UCAC-N
RCS2
RCC2
PCC
SHC
MCP
GLC
MFC
BBS
RRC
GRC
RV3*
NHS
HRL
LN
Hand
Chuk
MecHnd/Chuk
ShkAbs
FJ
FK
SpdContr
Ending

Stopper model No. selection method

Stopper combination table

Model No.-[① ② Stopper] [③ Adjustable stroke range]

Example) LCR-8-40- [S5] [06]-P7*

For stroke adjusting stopper -S

Adjustable stroke range Model No. [③]	Stopper adjusting range: Protruding end	Stopper adjusting range: Return end	Stopper model No. [①②] [S1]	[S2]	[S3]	[S4]	[S5]	[S6]
Blank	5 mm or none	5 mm or none	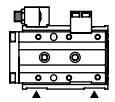 [S1]	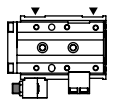 [S2]	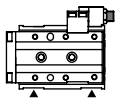 [S3]	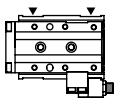 [S4]	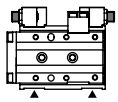 [S5]	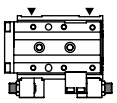 [S6]
[02]	15 mm or none	15 mm or none	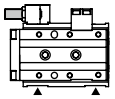 [S102]	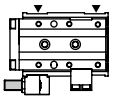 [S202]	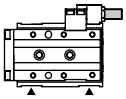 [S302]	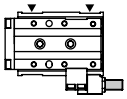 [S402]	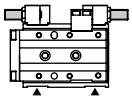 [S502]	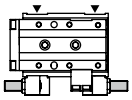 [S602]
[03]	25 mm or none	25 mm or none	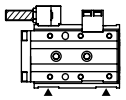 [S103]	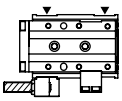 [S203]	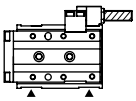 [S303]	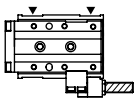 [S403]	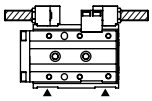 [S503]	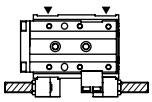 [S603]
[04]	15 mm	5 mm					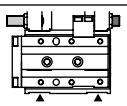 [S504]	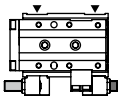 [S604]
[05]	25 mm	5 mm					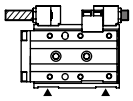 [S505]	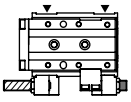 [S605]
[06]	5 mm	15 mm					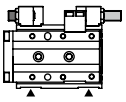 [S506]	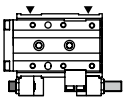 [S606]
[07]	5 mm	25 mm					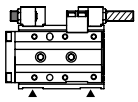 [S507]	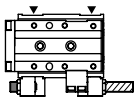 [S607]

: Stroke adjusting stopper (adjusting range 5 mm)
: Stroke adjusting stopper (adjusting range 15 mm)
: Stroke adjusting stopper (adjusting range 25 mm)

▲ shows the piping direction.

Selection table

●: Available —: Not available

Bore size (mm)		Stopper code S1 Blank	S1 02	S1 03	S2 Blank	S2 02	S2 03	S3 Blank	S3 02	S3 03	S4 Blank	S4 02	S4 03	S5 Blank	S5 02	S5 03	S5 04	S5 05	S5 06	S5 07	S6 Blank	S6 02	S6 03	S6 04	S6 05	S6 06	S6 07
		Adjustment length code																										
ø6,ø8	10st	●	—	—	●	—	—	●	●	—	●	●	—	●	—	—	—	—	●	—	●	—	—	—	—	●	—
	20st up	●	●	—	●	●	—	●	●	—	●	●	—	●	●	—	●	—	●	—	●	●	—	●	—	●	—
ø12 to ø25	10st	●	—	—	●	—	—	●	●	—	●	●	—	●	—	—	—	—	●	—	●	—	—	—	—	●	—
	20st	●	●	—	●	●	—	●	●	●	●	●	●	●	●	—	●	—	●	●	●	●	—	●	—	●	●
	30st up	●	●	●	●	●	●	●	●	●	●	●	●	●	●	●	●	●	●	●	●	●	●	●	●	●	●

LCM
LCR
LCG
LCW
LCX
STM
STG
STS/STL
STR2
UCA2
ULK*
JSK/M2
JSG
JSC3/JSC4
USSD
UFCD
USC
UB
JSB3
LMB
LML
HCM
HCA
LBC
CAC4
UCAC2
CAC-N
UCAC-N
RCS2
RCC2
PCC
SHC
MCP
GLC
MFC
BBS
RRC
GRC
RV3*
NHS
HRL
LN
Hand
Chuk
MecHnd/Chuk
ShkAbs
FJ
FK
SpdContr
Ending

Dimensions (bore size: ø6)

CAD

● LCR-6-P7*

Stroke length: 10, 20, 30
(Body mounting hole in the figure shows 20 mm stroke length)

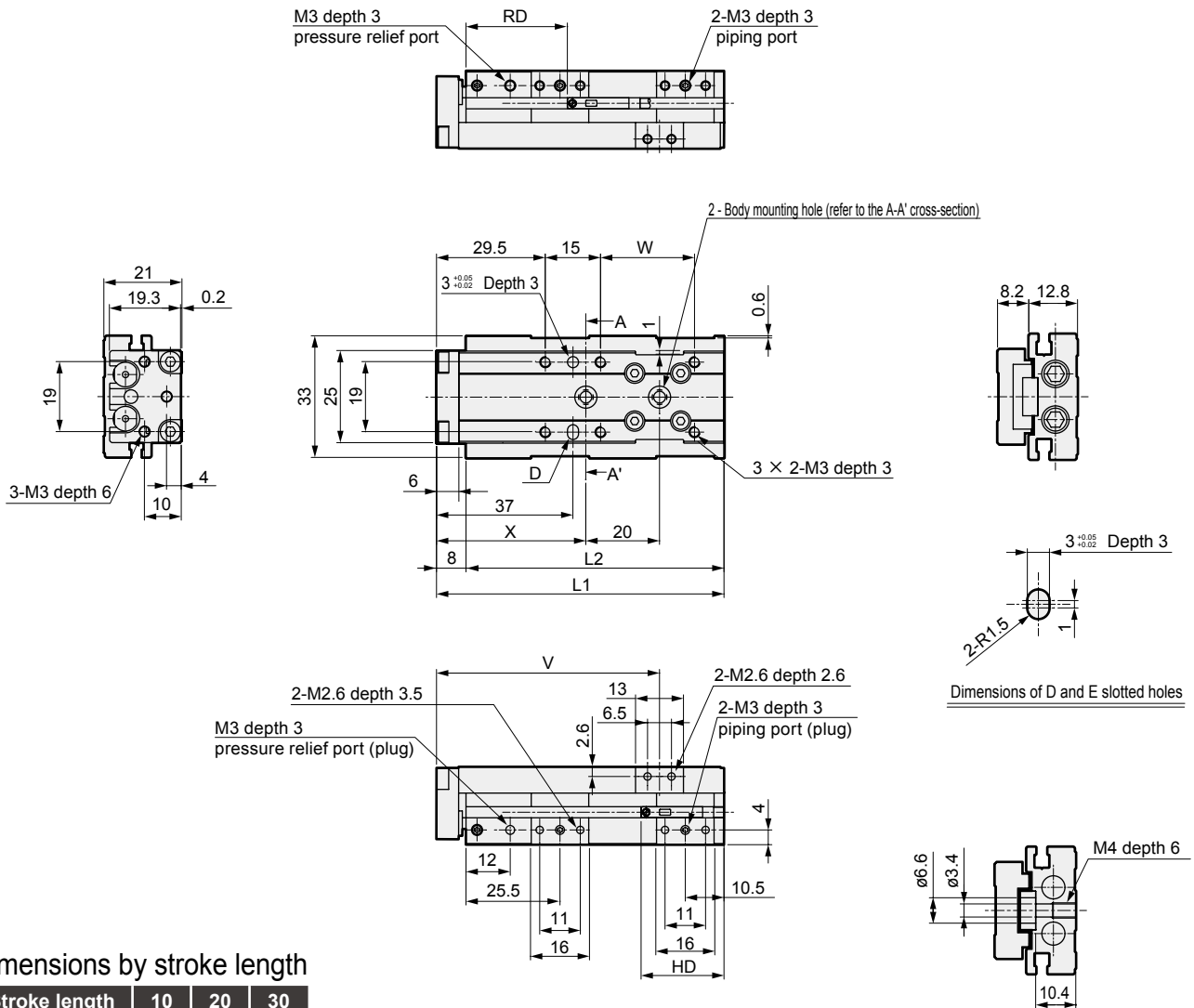

Dimensions by stroke length

Stroke length	10	20	30
L1	78		88
L2	70		80
V	60.5		70.5
W	25.5		35.5
X	40.5		38
Y	45.5		43
RD	27		
HD	33	23	

● Dimensions of protruding section when the F2S or F3S cylinder switch is mounted

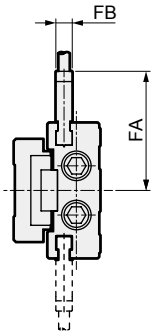

Stroke length	10	20	30
FA	29.1		
FB	4		
RD	26		
HD	34	24	

*1: When using a positioning hole, use a pin of dimensions that do not require press fitting.
The recommended tolerance of a pin is JIS tolerance m6 or less.

LCM
LCR
LCG
LCW
LCX
STM
STG
STS/STL
STR2
UCA2
ULK*
JSK/M2
JSG
JSC3/JSC4
USSD
UFCD
USC
UB
JSB3
LMB
LML
HCM
HCA
LBC
CAC4
UCAC2
CAC-N
UCAC-N
RCS2
RCC2
PCC
SHC
MCP
GLC
MFC
BBS
RRC
GRC
RV3*
NHS
HRL
LN
Hand
Chuk
MecHnd/Chuk
ShkAbs
FJ
FK
SpdContr
Ending

Dimensions (bore size: ø6) CAD

● LCR-6-P7*

Stroke length: 40, 50
(Body mounting hole in the figure shows 50 mm stroke length)

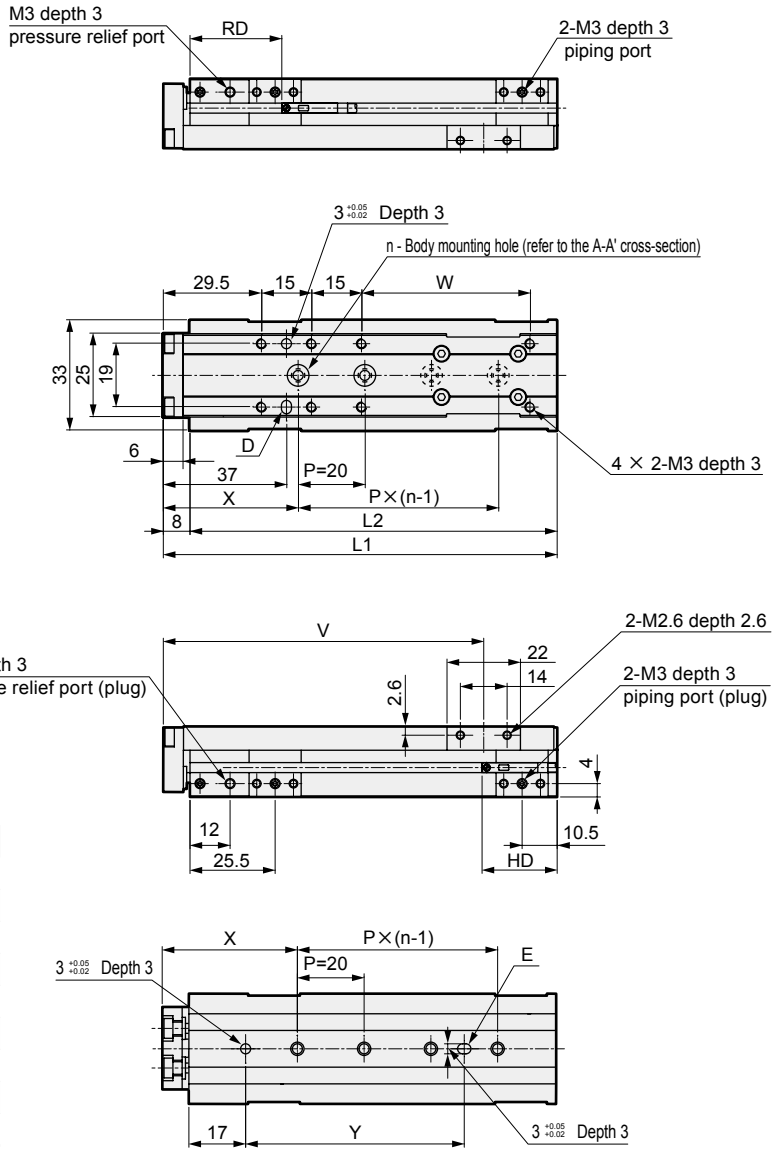

Dimensions by stroke length

Stroke length	40	50
L1	108	118
L2	100	110
n	3	4
V	86	96
W	40.5	50.5
X	39	40.5
Y	44	65.5
RD	27	
HD	33	

● Dimensions of protruding section when the F2S or F3S cylinder switch is mounted

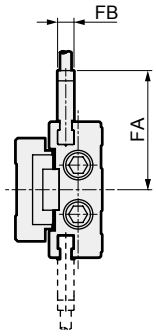

Stroke length	40	50
FA	29.1	
FB	4	
RD	26	
HD	34	

*1: When using a positioning hole, use a pin of dimensions that do not require press fitting.
The recommended tolerance of a pin is JIS tolerance m6 or less.

LCM
LCR
LCG
LCW
LCX
STM
STG
STS/STL
STR2
UCA2
ULK*
JSK/M2
JSG
JSC3/JSC4
USSD
UFCD
USC
UB
JSB3
LMB
LML
HCM
HCA
LBC
CAC4
UCAC2
CAC-N
UCAC-N
RCS2
RCC2
PCC
SHC
MCP
GLC
MFC
BBS
RRC
GRC
RV3*
NHS
HRL
LN
Hand
Chuk
MecHnd/Chuk
ShkAbs
FJ
FK
SpdContr
Ending

Dimensions (bore size: ø8)

● LCR-8-P7*

Stroke length: 10, 20, 30
(Body mounting hole in the figure shows 30 mm stroke length)

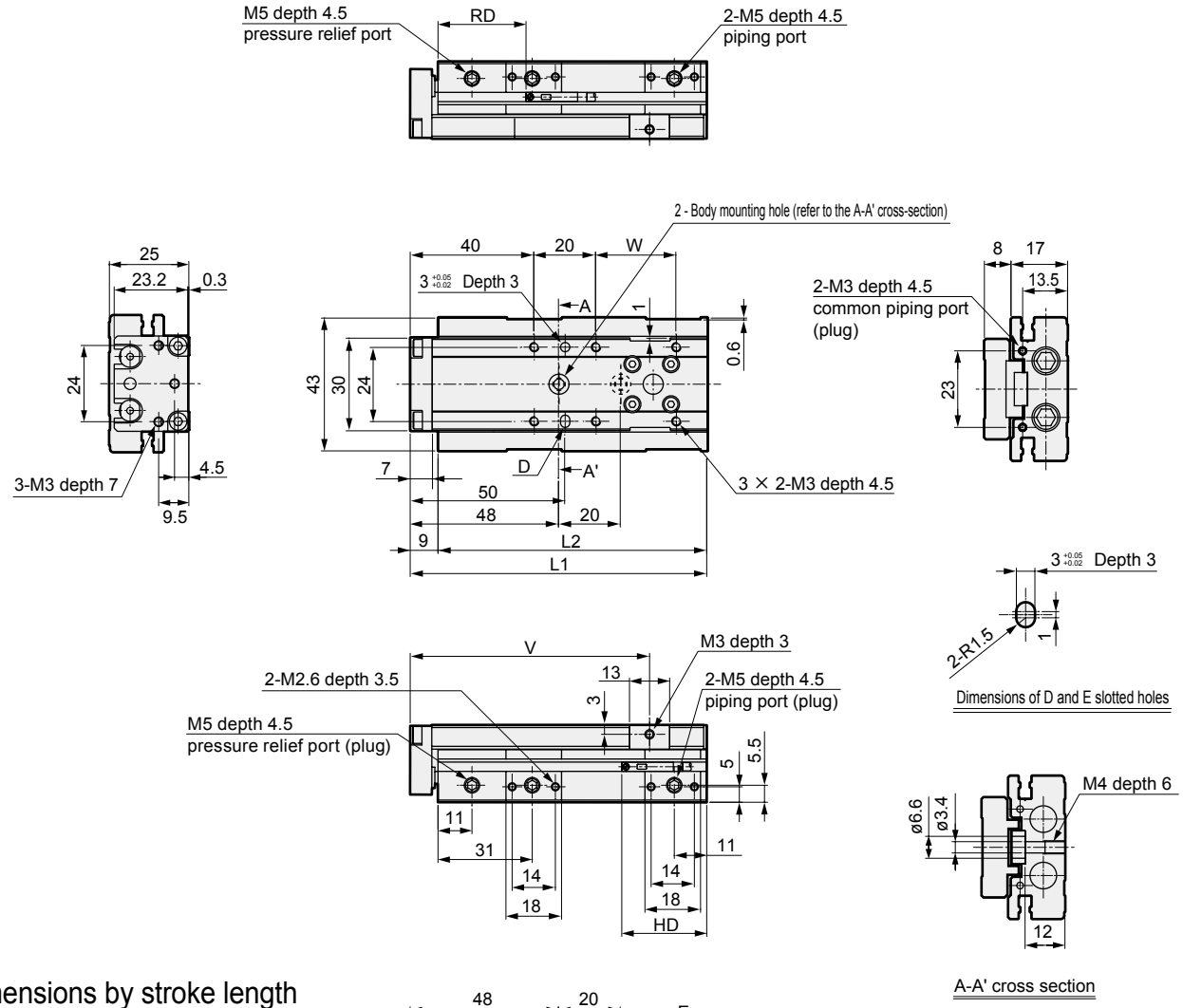

Dimensions by stroke length

Stroke length	10	20	30
L1	86		96
L2	77		87
V	67.5		77.5
W	16		26
RD	33		
HD	34	24	

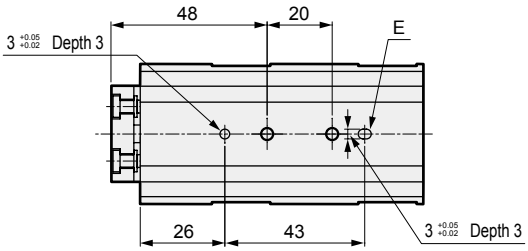

● Dimensions of protruding section when the F2S or F3S cylinder switch is mounted

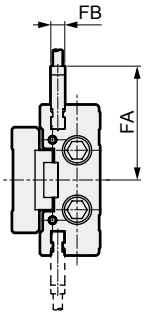

Stroke length	10	20	30
FA	32.6		
FB	4		
RD	32		
HD	35	25	

*1 : When using a positioning hole, use a pin of dimensions that do not require press fitting.
The recommended tolerance of a pin is JIS tolerance m6 or less.

*2 : When using rear piping, refer to the cautions of 1. Common; when piping on page 131.

LCM
LCR
LCG
LCW
LCX
STM
STG
STS/STL
STR2
UCA2
ULK*
JSK/M2
JSG
JSC3/JSC4
USSD
UFCD
USC
UB
JSB3
LMB
LML
HCM
HCA
LBC
CAC4
UCAC2
CAC-N
UCAC-N
RCS2
RCC2
PCC
SHC
MCP
GLC
MFC
BBS
RRC
GRC
RV3*
NHS
HRL
LN
Hand
Chuk
MecHnd/Chuk
ShkAbs
FJ
FK
SpdContr
Ending

Dimensions (bore size: ø8)

● LCR-8-P7*

Stroke length: 40, 50, 75
(Body mounting hole in the figure shows 50 mm stroke length)

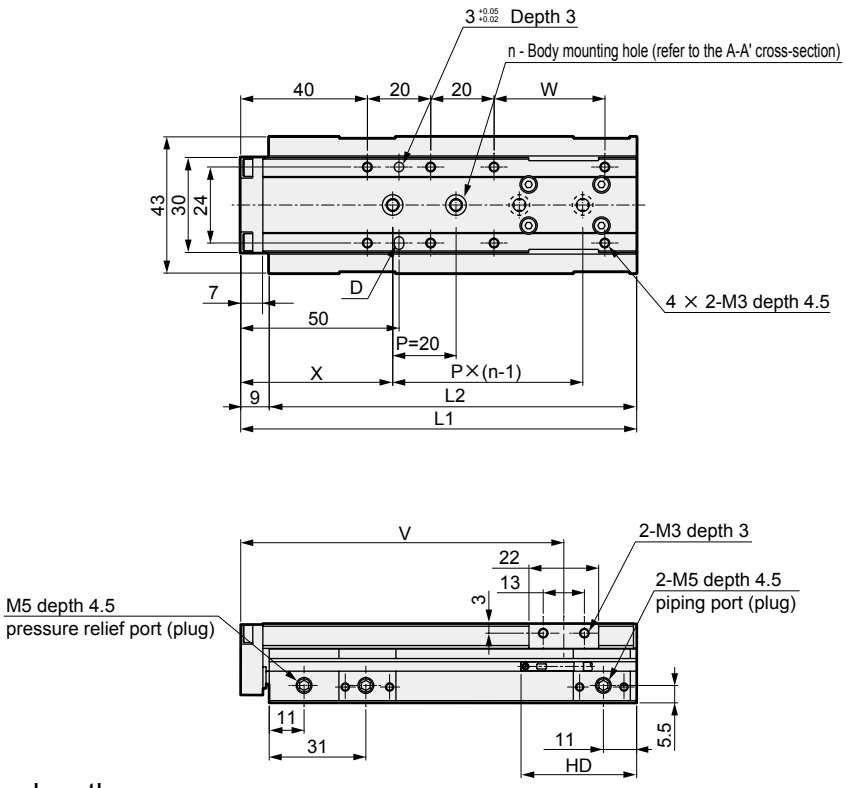

Dimensions by stroke length

Stroke length	40	50	75
L1	115	125	150
L2	106	116	141
n	3	4	5
V	92	102	127
W	25	35	60
X	46.5	48	45
Y	41.5	63	80
RD	33		
HD	33		

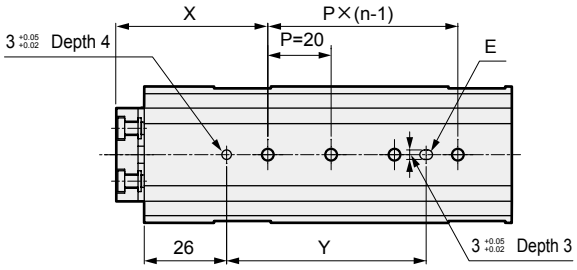

● Dimensions of protruding section when the F2S or F3S cylinder switch is mounted

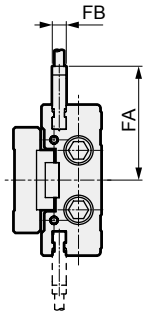

Stroke length	40	50	75
FA	32.6		
FB	4		
RD	32		
HD	34		

*1 : When using a positioning hole, use a pin of dimensions that do not require press fitting.
The recommended tolerance of a pin is JIS tolerance m6 or less.

*2 : When using rear piping, refer to the cautions of 1. Common; when piping on page 131.

LCM
LCR
LCG
LCW
LCX
STM
STG
STS/STL
STR2
UCA2
ULK*
JSK/M2
JSG
JSC3/JSC4
USSD
UFCD
USC
UB
JSB3
LMB
LML
HCM
HCA
LBC
CAC4
UCAC2
CAC-N
UCAC-N
RCS2
RCC2
PCC
SHC
MCP
GLC
MFC
BBS
RRC
GRC
RV3*
NHS
HRL
LN
Hand
Chuk
MecHnd/Chuk
ShkAbs
FJ
FK
SpdContr
Ending

Dimensions (bore size: ø12)

● LCR-12-P7*

Stroke: 10, 20, 30, 40, 50
(Body mounting hole in the figure shows 30 mm stroke length)

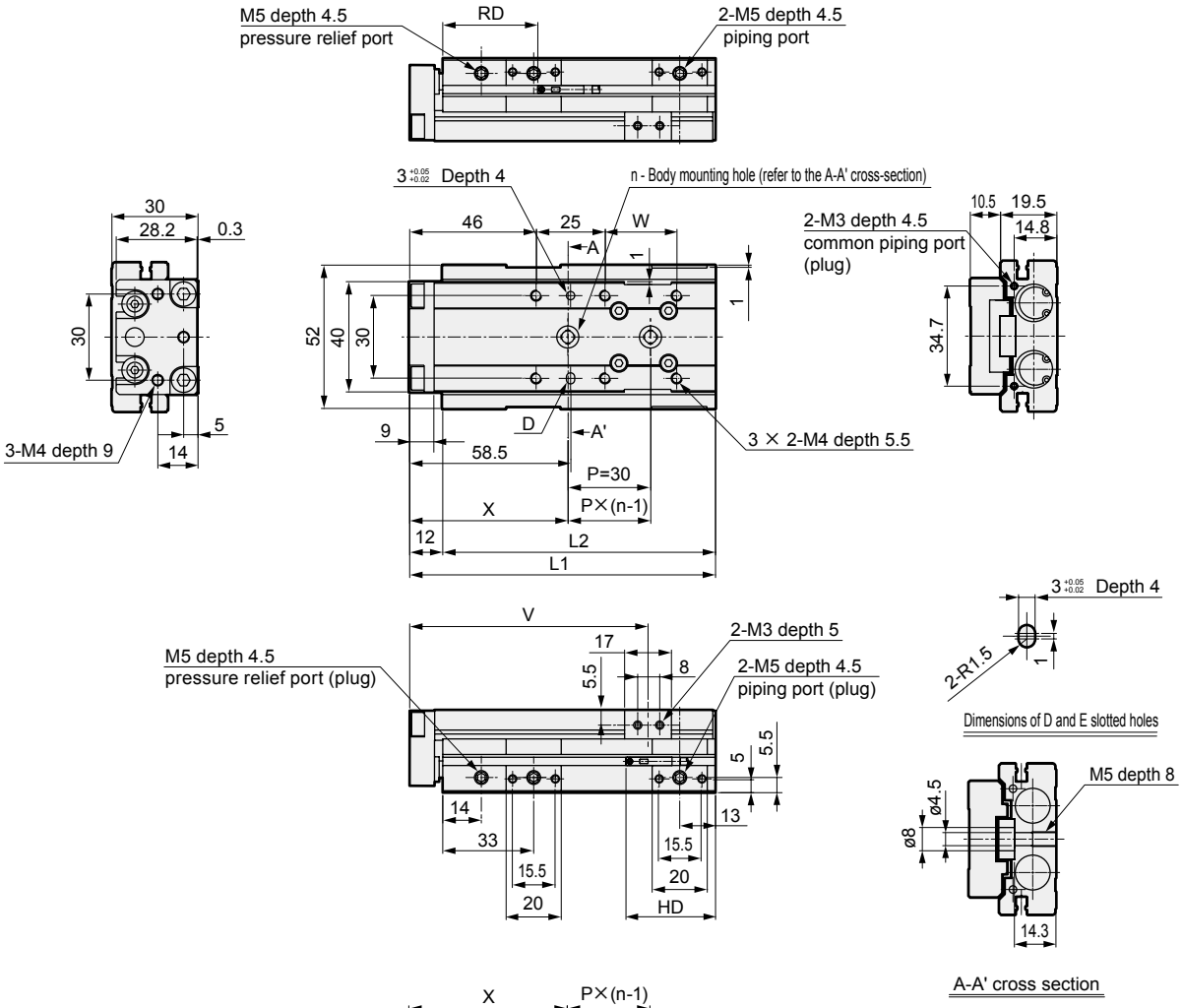

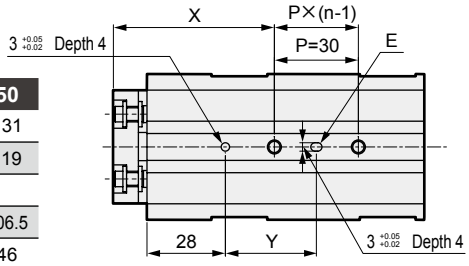

Dimensions by stroke length

Stroke length	10	20	30	40	50
L1	111			121	131
L2	99			109	119
n	2			3	
V	86.5			96.5	106.5
W	26			36	46
X	57.5			56	52
Y	32.5			31	57
RD	36.5				
HD	52.5	42.5	32.5		

● Dimensions of protruding section when the F2S or F3S cylinder switch is mounted

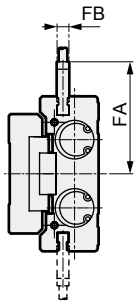

Stroke length	10	20	30	40	50
FA	37.8				
FB	4				
RD	35.5				
HD	53.5	43.5	33.5		

*1 : When using a positioning hole, use a pin of dimensions that do not require press fitting.
The recommended tolerance of a pin is JIS tolerance m6 or less.

*2 : When using rear piping, refer to the cautions of 1. Common; when piping on page 131.

Dimensions (bore size: ø12)

● LCR-12-P7*

Stroke length: 75, 100
(Body mounting hole in the figure shows 75 mm stroke length)

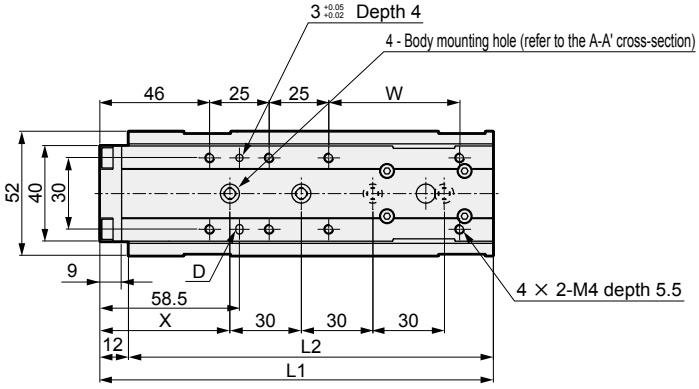

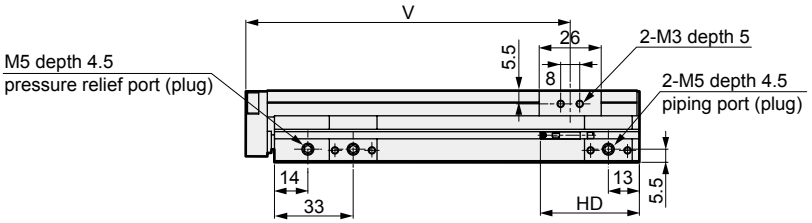

Dimensions by stroke length

Stroke length	75	100
L1	165	190
L2	153	178
V	136	161
W	55	80
X	54.5	67
Y	89.5	102
RD	36.5	
HD	41.5	

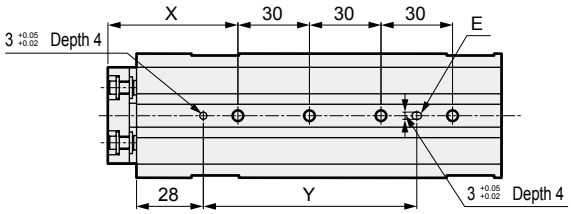

● Dimensions of protruding section when the F2S or F3S cylinder switch is mounted

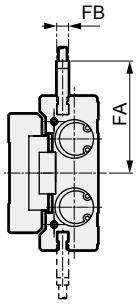

Stroke length	75	100
FA	37.8	
FB	4	
RD	35.5	
HD	42.5	

*1 : When using a positioning hole, use a pin of dimensions that do not require press fitting.
The recommended tolerance of a pin is JIS tolerance m6 or less.

*2 : When using rear piping, refer to the cautions of 1. Common; when piping on page 131.

LCM
LCR
LCG
LCW
LCX
STM
STG
STS/STL
STR2
UCA2
ULK*
JSK/M2
JSG
JSC3/JSC4
USSD
UFCD
USC
UB
JSB3
LMB
LML
HCM
HCA
LBC
CAC4
UCAC2
CAC-N
UCAC-N
RCS2
RCC2
PCC
SHC
MCP
GLC
MFC
BBS
RRC
GRC
RV3*
NHS
HRL
LN
Hand
Chuk
MecHnd/Chuk
ShkAbs
FJ
FK
SpdContr
Ending

Dimensions (bore size: ø16)

● LCR-16-P7*

Stroke: 10, 20, 30, 40, 50
(Body mounting hole in the figure shows 30 mm stroke length)

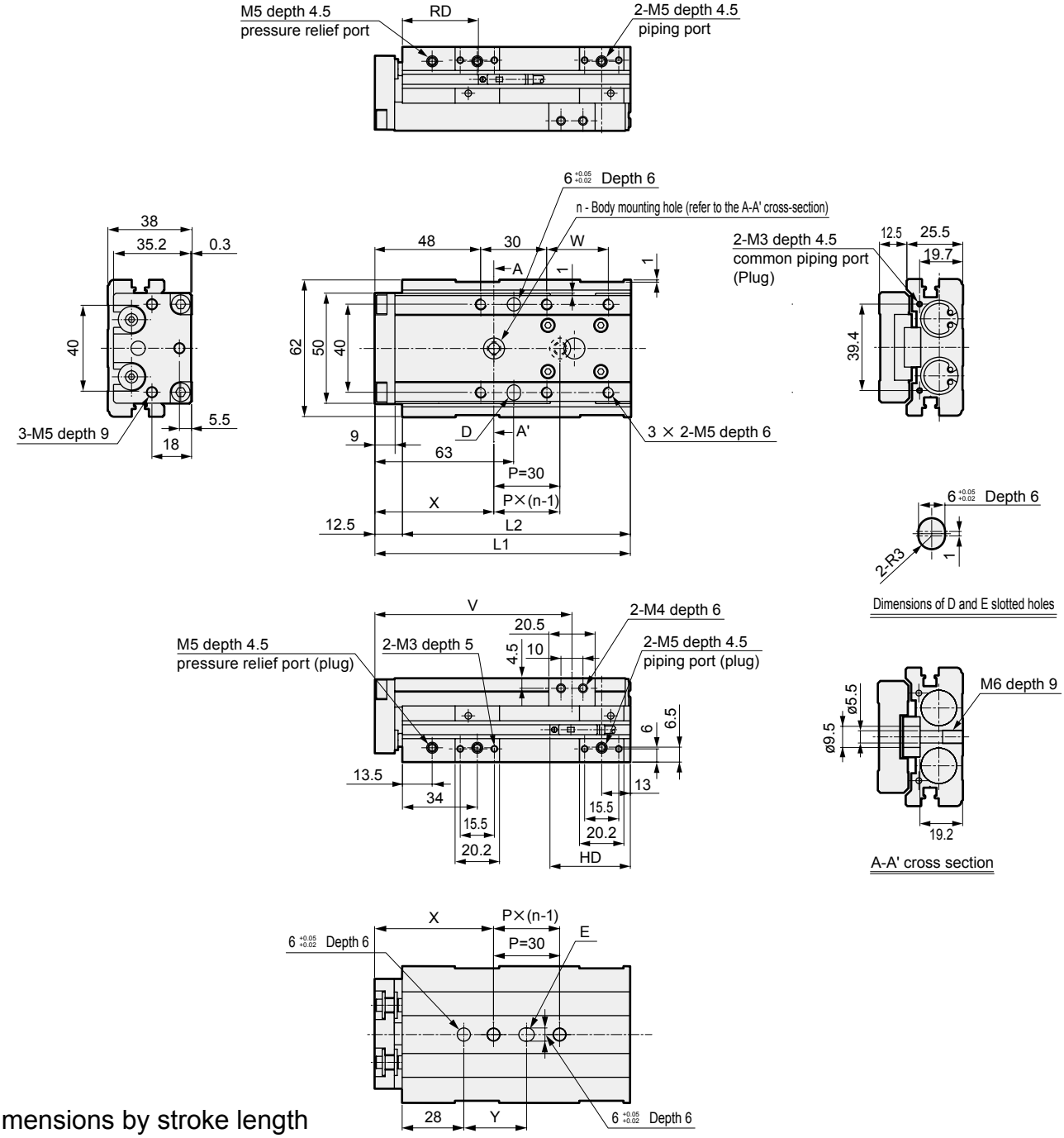

Dimensions by stroke length

Stroke length		10	20	30	40	50
L1		116			126	136
L2		103.5			113.5	123.5
n		2				3
V		89.8			99.8	109.8
W		28			38	48
X		54			65.5	55.5
Y		28.5			40	60
T0/5*	RD	37				
T2/3*	HD	56.5	46.5	36.5		
T2/3W*	RD	39.5				
	HD	54	44	34		

*1 : When using a positioning hole, use a pin of dimensions that do not require press fitting.
The recommended tolerance of a pin is JIS tolerance m6 or less.

*2 : When using rear piping, refer to the cautions of 1. Common; when piping on page 131.

Dimensions (bore size: ø16)

● LCR-16-P7*

Stroke length: 75, 100, 125
(Body mounting hole in the figure shows 75 mm stroke length)

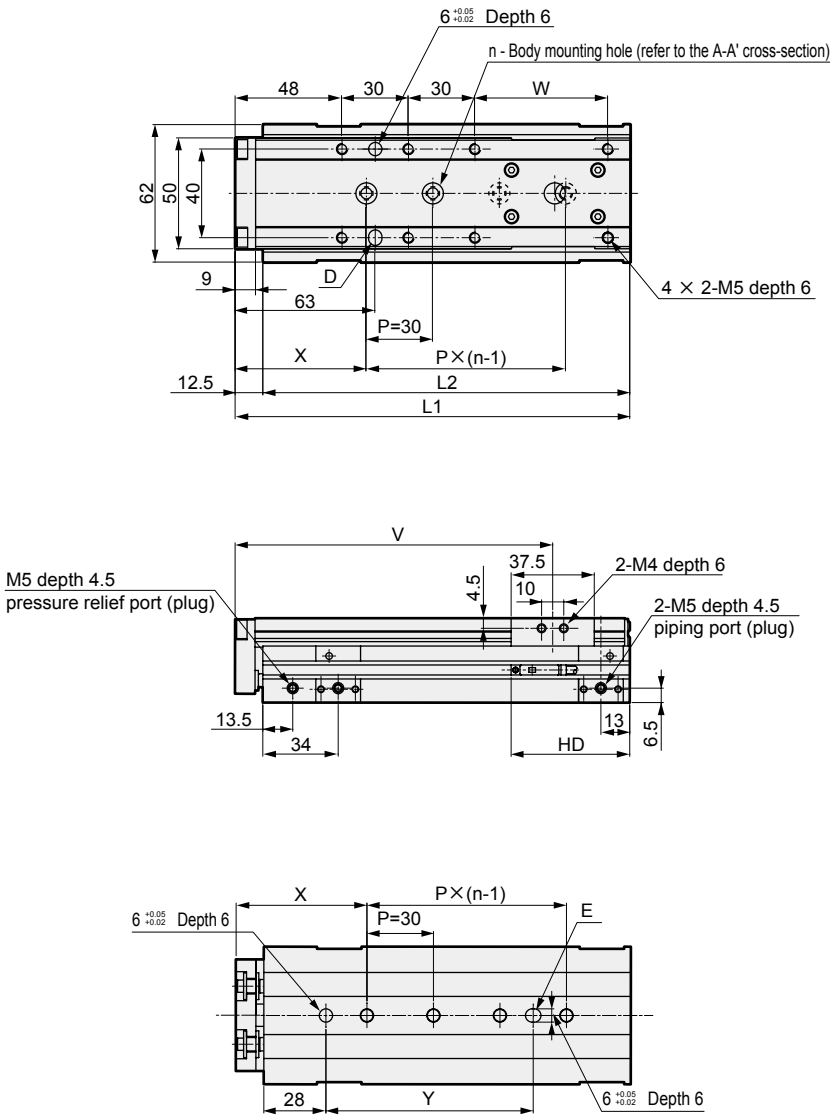

Dimensions by stroke length

Stroke length		75	100	125
L1		178	203	228
L2		165.5	190.5	215.5
n		4	5	
V		143.3	168.3	193.3
W		60	85	110
X		59	57	69
Y		93.5	121.5	133.5
T0/5*	RD	37		
T2/3*	HD	53.5		
T2/3W*	RD	39.5		
	HD	51		

*1 : When using a positioning hole, use a pin of dimensions that do not require press fitting.
The recommended tolerance of a pin is JIS tolerance m6 or less.

*2 : When using rear piping, refer to the cautions of 1. Common; when piping on page 131.

Dimensions (bore size: ø20)

● LCR-20-P7*

Stroke: 10, 20, 30, 40, 50
(Body mounting hole in the figure shows 30 mm stroke length)

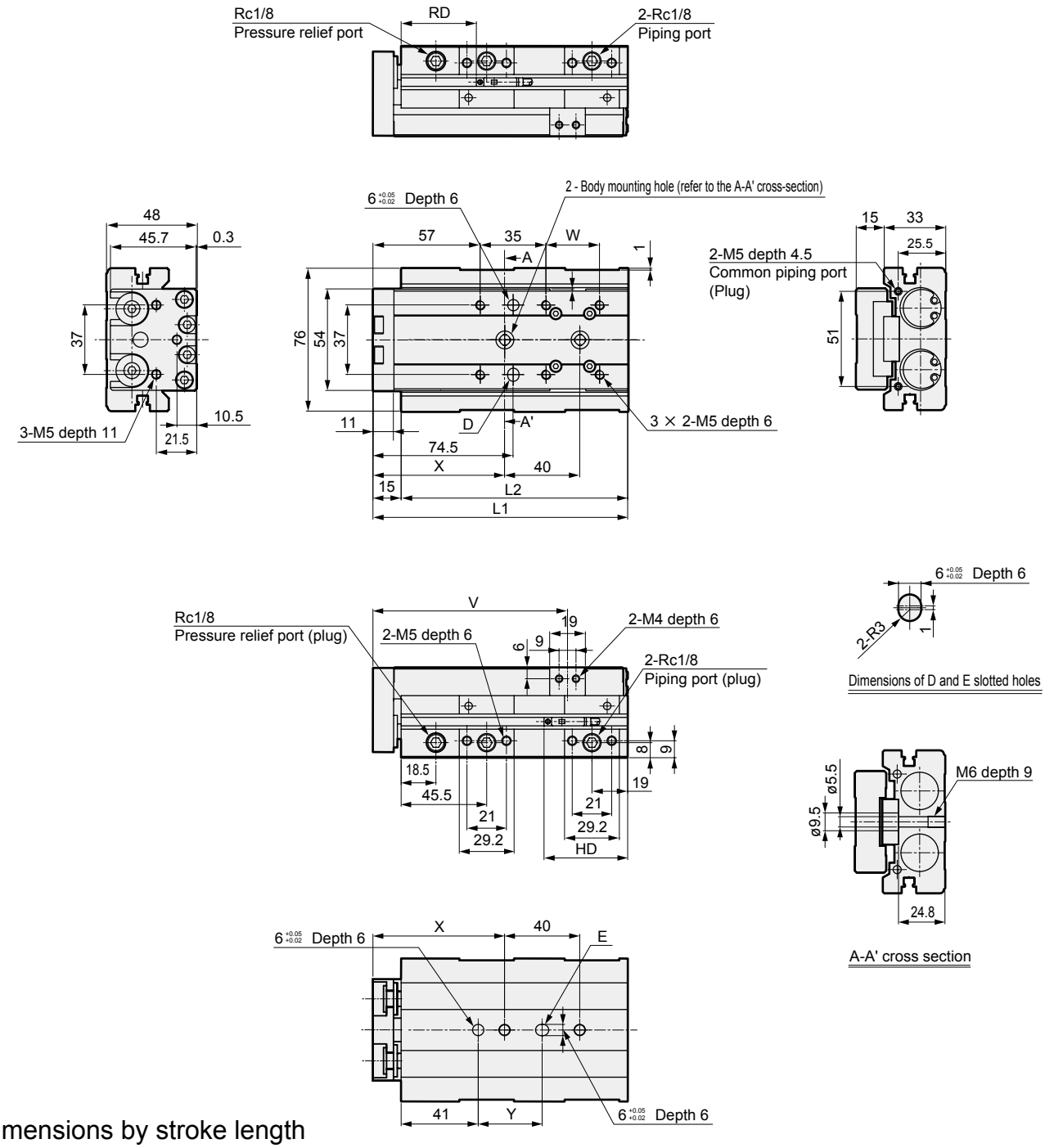

Dimensions by stroke length

Stroke length		10	20	30	40	50
L1		135.5			145.5	155.5
L2		120.5			130.5	140.5
V		103.5			113.5	123.5
W		28.5			38.5	48.5
X		70			76	74
Y		34			40	38
T0/5*	RD	45.5				
T2/3*	HD	65	55	45		
T2/3W*	RD	47				
	HD	63	53	43		

*1 : When using a positioning hole, use a pin of dimensions that do not require press fitting.
The recommended tolerance of a pin is JIS tolerance m6 or less.

*2 : When using rear piping, refer to the cautions of 1. Common; when piping on page 131.

LCM
LCR
LCG
LCW
LCX
STM
STG
STS/STL
STR2
UCA2
ULK*
JSK/M2
JSG
JSC3/JSC4
USSD
UFCD
USC
UB
JSB3
LMB
LML
HCM
HCA
LBC
CAC4
UCAC2
CAC-N
UCAC-N
RCS2
RCC2
PCC
SHC
MCP
GLC
MFC
BBS
RRC
GRC
RV3*
NHS
HRL
LN
Hand
Chuk
MecHnd/Chuk
ShkAbs
FJ
FK
SpdContr
Ending

Dimensions (bore size: ø20)

● LCR-20-P7*

Stroke length: 75, 100, 125, 150
(Body mounting hole in the figure shows 100 mm stroke length)

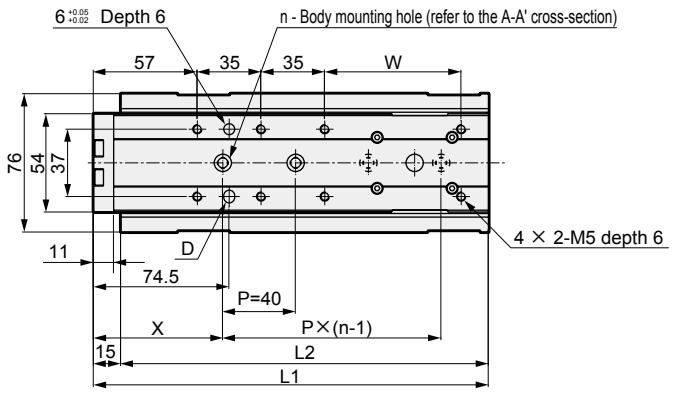

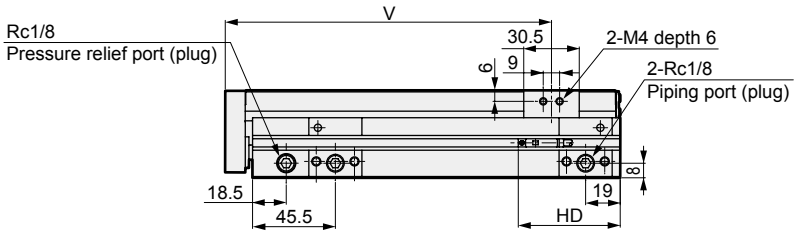

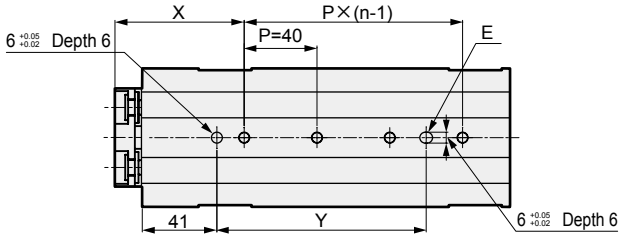

Dimensions by stroke length

Stroke length		75	100	125	150
L1		192	217	242	267
L2		177	202	227	252
n		3	4		5
V		154.3	179.3	204.3	229.3
W		50	75	100	125
X		71		78	76
Y		75	115	122	160
T0/5*	RD	45.5			
T2/3*	HD	57.5			
T2/3W*	RD	47			
	HD	55.5			

*1 : When using a positioning hole, use a pin of dimensions that do not require press fitting.
The recommended tolerance of a pin is JIS tolerance m6 or less.

*2 : When using rear piping, refer to the cautions of 1. Common; when piping on page 131.

LCM
LCR
LCG
LCW
LCX
STM
STG
STS/STL
STR2
UCA2
ULK*
JSK/M2
JSG
JSC3/JSC4
USSD
UFCD
USC
UB
JSB3
LMB
LML
HCM
HCA
LBC
CAC4
UCAC2
CAC-N
UCAC-N
RCS2
RCC2
PCC
SHC
MCP
GLC
MFC
BBS
RRC
GRC
RV3*
NHS
HRL
LN
Hand
Chuk
MecHnd/Chuk
ShkAbs
FJ
FK
SpdContr
Ending

Dimensions (bore size: ø25)

● LCR-25-P7*

Stroke: 10, 20, 30, 40, 50
(Body mounting hole in the figure shows 30 mm stroke length)

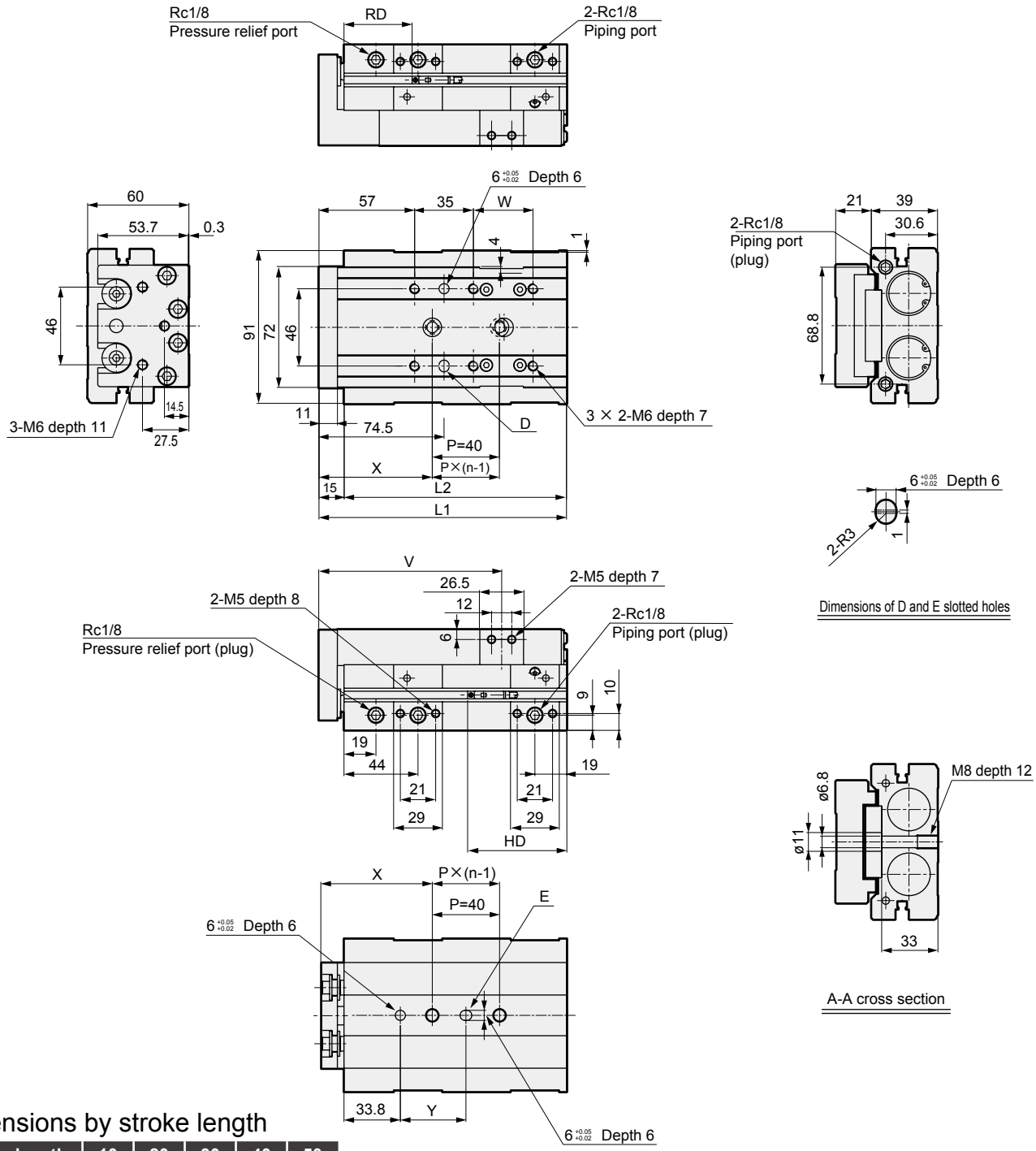

Dimensions by stroke length

Stroke length		10	20	30	40	50
L1		147.5			157.5	167.5
L2		132.5			142.5	152.5
n		2			3	2
V		108.8			118.8	128.8
W		35.5			45.5	55.5
X		67.5			70.5	85.5
Y		39			42	57
T0/5*	RD	44				
T2/3*	HD	78.5	68.5	58.5		
T2/3W*	RD	46				
	HD	76.5	66.5	56.5		

*1 : When using a positioning hole, use a pin of dimensions that do not require press fitting.
The recommended tolerance of a pin is JIS tolerance m6 or less.

*2 : When using rear piping, refer to the cautions of 1. Common; when piping on page 131.

LCM
LCR
LCG
LCW
LCX
STM
STG
STS/STL
STR2
UCA2
ULK*
JSK/M2
JSG
JSC3/JSC4
USSD
UFCD
USC
UB
JSB3
LMB
LML
HCM
HCA
LBC
CAC4
UCAC2
CAC-N
UCAC-N
RCS2
RCC2
PCC
SHC
MCP
GLC
MFC
BBS
RRC
GRC
RV3*
NHS
HRL
LN
Hand
Chuk
MecHnd/Chuk
ShkAbs
FJ
FK
SpdContr
Ending

Dimensions (bore size: ø25)

● LCR-25-P7*

Stroke length: 75, 100, 125, 150
(Body mounting hole in the figure shows 100 mm stroke length)

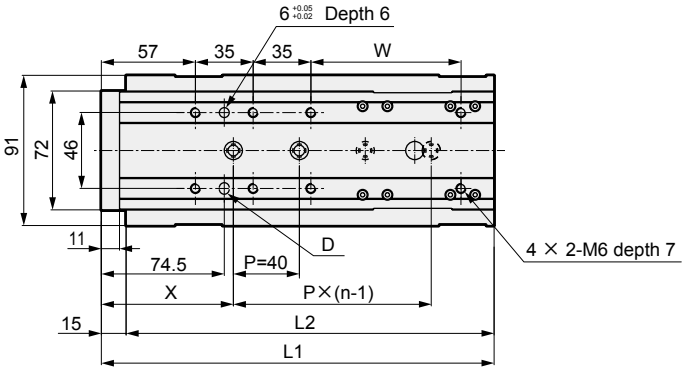

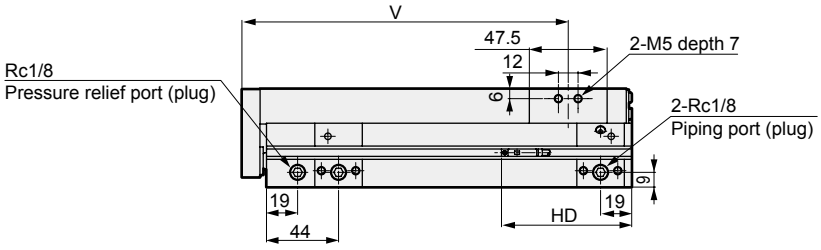

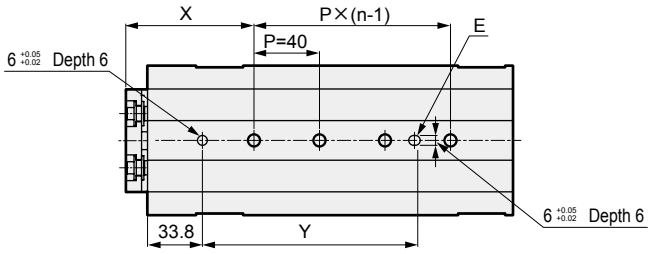

Dimensions by stroke length

Stroke length		75	100	125	150
L1		213	238	263	288
L2		198	223	248	273
n		3	4	5	
V		163.8	188.8	213.8	238.8
W		66	91	116	141
X		85	80	70	85
Y		96.5	131.5	161.5	176.5
T0/5*	RD	44			
T2/3*	HD	79			
T2/3W*	RD	46			
	HD	77			

*1 : When using a positioning hole, use a pin of dimensions that do not require press fitting.
The recommended tolerance of a pin is JIS tolerance m6 or less.

*2 : When using rear piping, refer to the cautions of 1. Common; when piping on page 131.

LCM
LCR
LCG
LCW
LCX
STM
STG
STS/STL
STR2
UCA2
ULK*
JSK/M2
JSG
JSC3/JSC4
USSD
UFCD
USC
UB
JSB3
LMB
LML
HCM
HCA
LBC
CAC4
UCAC2
CAC-N
UCAC-N
RCS2
RCC2
PCC
SHC
MCP
GLC
MFC
BBS
RRC
GRC
RV3*
NHS
HRL
LN
Hand
Chuk
MecHnd/Chuk
ShkAbs
FJ
FK
SpdContr
Ending

Dimensions: Option

● Stroke adjusting stopper (S1 to S6)

· For ø8

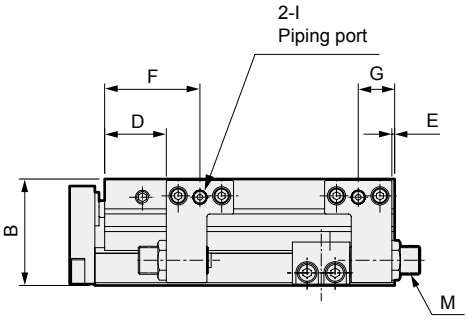

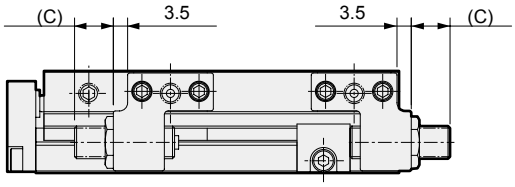

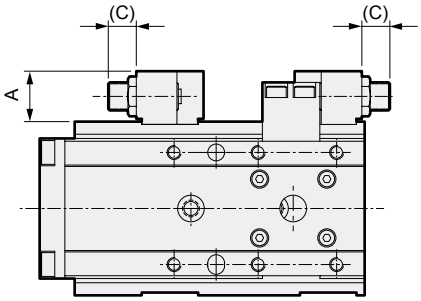

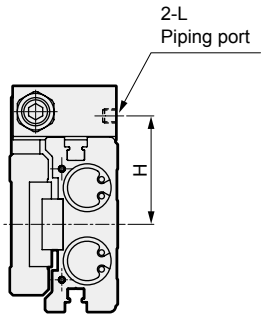

*1: F, G, H, I and L dimensions are only for the types with port on the stopper (S*D*).

Code / Bore size (mm)	A	B	C Adjustable stroke range 5 mm	C 15 mm	C 25 mm	D	E	F	G	H	I	L	M
ø6	14	19.5	11	21	-	16	1	25.5	10.5	24	M3 depth 3	M3 depth 3	M8×0.75
ø8	15.6	24.5	9.5	19.5	-	20.5	0.5	30.5	10.5	27.3	M5 depth 4	M5 depth 4	M8×0.75
ø12	15.5	29	12	22	32	21	1	33	13	31	M5 depth 4	M5 depth 4	M8×0.75
ø16	18	37	10	20	30	22	1	34	13	39	M5 depth 4	M5 depth 4	M10×1
ø20	20.5	45	14.5	24.5	34.5	29	2.5	45.5	19	46	Rc1/8	M5 depth 4	M12×1
ø25	20.5	57	11.5	21.5	31.5	27.5	2.5	44	19	54.5	Rc1/8	M5 depth 4	M12×1

MEMO

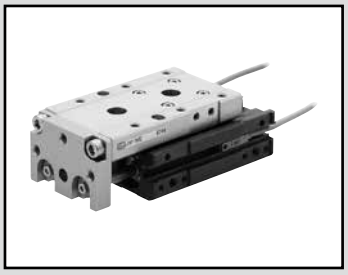

Linear slide cylinder Double acting/fine speed

LCR-F Series

● Bore size: ø12/ø16/ø20/ø25

JIS symbol

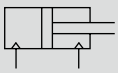

Specifications

Item		LCR-F			
Bore size mm		ø12	ø16	ø20	ø25
Actuation		Double acting			
Working fluid		Compressed air			
Max. working pressure MPa		0.7 (≈100 psi, 7 bar)			
Min. working pressure MPa		0.15 (≈22 psi, 1.5 bar)			
Proof pressure MPa		1.05 (≈150 psi, 10.5 bar)			
Ambient temperature °C		5 (41°F) to 60 (140°F)			
Port size	Main body side	M5		Rc1/8	
	Main body back	M3		M5	Rc1/8
Stroke tolerance mm		$^{+2.0}_{0}$ (*1)			
Working piston speed mm/s		5 to 200 (no load at 0.5 MPa (≈73 psi, 5 bar))			
Cushion		With rubber cushion			
Lubrication		Not available			
Allowable absorbed energy J		Refer to Table 2 on page 122.			

*1: Note that there will be a slight gap between the end plate and floating bush if no stopper is attached.
*2: The stroke adjusting stopper for 0.3 MPa and over working pressure is the metal sealing.

Stroke length

Bore size (mm)	Standard stroke length (mm)
ø12	10, 20, 30, 40, 50, 75, 100
ø16	10, 20, 30, 40, 50, 75, 100, 125
ø20	10, 20, 30, 40, 50, 75, 100, 125, 150
ø25	10, 20, 30, 40, 50, 75, 100, 125, 150

Note: Products with stroke lengths other than the above are not available.

Theoretical thrust table

Refer to page 123.

Low speed performance

The following data is at no load and supply pressure 0.5 MPa. As the values vary with measurement conditions, etc., they are not guaranteed.

● LCR-12-30

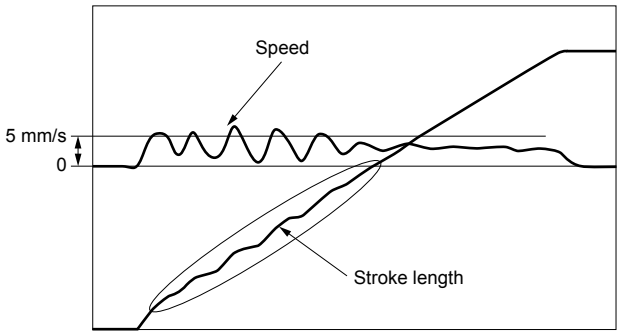

Stick-slip occurs during the stroke when a speed of 5 mm/s is set.

● LCR-F-12-30

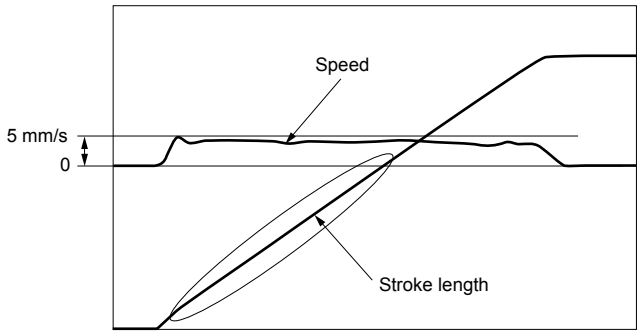

With the basic, stick-slip occurs at a speed of 5 mm/s, whereas the fine speed can be stably operated without stick-slip.

LCM
LCR
LCG
LCW
LCX
STM
STG
STS/STL
STR2
UCA2
ULK*
JSK/M2
JSG
JSC3/JSC4
USSD
UFCD
USC
UB
JSB3
LMB
LML
HCM
HCA
LBC
CAC4
UCAC2
CAC-N
UCAC-N
RCS2
RCC2
PCC
SHC
MCP
GLC
MFC
BBS
RRC
GRC
RV3*
NHS
HRL
LN
Hand
Chuk
MecHnd/Chuk
ShkAbs
FJ
FK
SpdContr
Ending

Switch specifications

● 1-color/2-color display

Item	Reed 2-wire				Proximity 2-wire		Proximity 3-wire		
	T0H/T0V		T5H/T5V		T2H/T2V	T2WH/T2WV	T3H/T3V	T3PH/T3PV	T3WH/T3WV
Applications	For programmable controller, relay		For programmable controller, relay, IC circuit (without indicator lamp), serial connection		Dedicated for programmable controller		For programmable controller, relay		
Output method	-		-		-		NPN output	PNP output	NPN output
Power supply voltage	-		-		-		10 to 28 VDC		
Load voltage	12/24 VDC	110 VAC	5/12/24 VDC	110 VAC	10 to 30 VDC	24 VDC ±10%	30 VDC or less		
Load current	5 to 50 mA	7 to 20 mA	50 mA or less	20 mA or less	5 to 20 mA		100 mA or less		50 mA or less
Indicator lamp	LED (Lit when ON)		Without indicator lamp		LED (Lit when ON)	Red/green LED (Lit when ON)	LED (Lit when ON)	Yellow LED (Lit when ON)	Red/green LED (Lit when ON)
Leakage current	0 mA				1 mA or less		10 μA or less		
Weight g	1 m:18 3 m:49 5 m:80								

Item	Proximity 2-wire	Proximity 3-wire	Proximity 2-wire		Proximity 3-wire		
	F2S	F3S	F2H/F2V	F2YH/F2YV	F3H/F3V	F3PH/F3PV (Made to order)	F3YH/F3YV
Applications	Dedicated for programmable controller	For programmable controller, relay	Dedicated for programmable controller		For programmable controller, relay		
Output method	-	NPN output	-		NPN output	PNP output	NPN output
Power supply voltage	-	10 to 28 VDC	-		10 to 28 VDC	4.5 to 28 VDC	10 to 28 VDC
Load voltage	10 to 30 VDC	30 VDC or less	10 to 30 VDC	24 VDC ±10%	30 VDC or less		
Load current	5 to 20 mA	50 mA or less	5 to 20 mA		100 mA or less	50 mA or less	
Indicator lamp	LED (Lit when ON)		Yellow LED (Lit when ON)	Red/green LED (Lit when ON)	Yellow LED (Lit when ON)		Red/green LED (Lit when ON)
Leakage current	1 mA or less	10 μA or less	1 mA or less		10 μA or less		
Weight g	1 m:10 3 m:29						

*1 : Refer to Ending Page 1 for detailed switch specifications and dimensions.
*2 : Switches other than the above models, such as switches with connectors, are also available. Refer to Ending Page 1.
*3 : The max. load current is 20 mA at 25°C. The current is lower than 20 mA if the operating ambient temperature around the switch is higher than 25°C. (5 to 10 mA at 60°C)
*4 : The F type switch uses a bend-resistant lead wire.

Cylinder weight

● Fine speed (Unit: g)

Bore size (mm)	Basic Stroke length (mm)								
	10	20	30	40	50	75	100	125	150
ø12	310	320	320	360	390	520	610	-	-
ø16	490	500	500	550	610	840	970	1,110	-
ø20	900	910	920	1,000	1,090	1,390	1,600	1,810	2,020
ø25	1,620	1,640	1,650	1,760	1,860	2,350	2,620	2,890	3,160

● Additional weight of options (Unit: g)

Bore size (mm)	Option/stopper code			
	S1 to S4	S5/S6	A1 to A4	A5/A6
ø12	70	100	80	110
ø16	110	150	120	160
ø20	170	250	180	270
ø25	290	380	300	400

Specifications for rechargeable battery

(Catalog No. CC-1226A)

LCR - … - P4*

● Design compatible with rechargeable battery manufacturing process.

* Contact CKD for details.

Dimensions

Same as double acting/single rod. Refer to pages 74 to 82.

LCM
LCR
LCG
LCW
LCX
STM
STG
STS/STL
STR2
UCA2
ULK*
JSK/M2
JSG
JSC3/JSC4
USSD
UFCD
USC
UB
JSB3
LMB
LML
HCM
HCA
LBC
CAC4
UCAC2
CAC-N
UCAC-N
RCS2
RCC2
PCC
SHC
MCP
GLC
MFC
BBS
RRC
GRC
RV3*
NHS
HRL
LN
Hand
Chuk
MecHnd/Chuk
ShkAbs
FJ
FK
SpdContr
Ending

How to order

Without switch (built-in magnet for switch)

LCR-F - 12 - 40 ——— S506 DTN

With switch (built-in magnet for switch)

LCR-F - 12 - 40 - F2H* - R - S506 DTN

Model No. — Ⓐ Bore size — Ⓑ Stroke length — Ⓒ Switch model No. — Ⓓ Switch quantity — Ⓔ Stopper — Ⓕ Option

Code	Description
Ⓐ Bore size	
12	ø12
16	ø16
20	ø20
25	ø25

Ⓑ Stroke length (mm)

		Bore size (ø)			
		12	16	20	25
10	10	●	●	●	●
20	20	●	●	●	●
30	30	●	●	●	●
40	40	●	●	●	●
50	50	●	●	●	●
75	75	●	●	●	●
100	100	●	●	●	●
125	125		●	●	●
150	150			●	●

Ⓒ Switch model No.

Axial lead wire	Radial lead wire	Contact	Voltage AC	Voltage DC	Indicator lamp	Lead wire	Bore size ø12	ø16	ø20	ø25
-	**F2S***	Proximity		●	1-color display	2-wire	●			
-	**F3S***	Proximity		●	1-color display	3-wire	●			
F2H*	**F2V***	Proximity		●	1-color display	2-wire	●			
F3H*	**F3V***	Proximity		●	1-color display	3-wire	●			
F3PH*	**F3PV***	Proximity		●	1 color display (PNP output) (made to order)	3-wire	●			
F2YH*	**F2YV***	Proximity		●	2-color display	2-wire	●			
F3YH*	**F3YV***	Proximity		●	2-color display	3-wire	●			
T0H*	**T0V***	Reed	●	●	1-color display	2-wire		●	●	●
T5H*	**T5V***	Reed	●	●	no indicator lamp	2-wire		●	●	●
T2H*	**T2V***	Proximity		●	1-color display	2-wire		●	●	●
T3H*	**T3V***	Proximity		●	1-color display	3-wire		●	●	●
T3PH*	**T3PV***	Proximity		●	1-color display (PNP output)	3-wire		●	●	●
T2WH*	**T2WV***	Proximity		●	2-color display	2-wire		●	●	●
T3WH*	**T3WV***	Proximity		●	2-color display	3-wire		●	●	●

*** Lead wire length**

Blank	1 m (standard)		●		
3	3 m (option)		●		
5	5 m (option)			●	

Ⓓ Switch quantity

R	1 on rod side
H	1 on head side
D	2

Ⓔ Stopper

Refer to "Stopper" on page 115.

Ⓕ Option

Blank	Port on the stopper: without port	
D	Port on stopper: side and bottom ports	*2, *5, *11
Blank	Stopper block material: steel	
T	Stopper block material: steel (nitriding)	*5
Plug attached		
Blank	None	
N	With side piping port plug (not available for ø25)	*8

Precautions for model No. selection

*1 : For the adjustable stroke range with a shock absorber stopper, refer to the stopper dimensions table on page 82.
*2 : For the port position, refer to the stopper dimensions on page 82.
*3 : The port positions of the standard without stopper are ① and ③ in the figure below.
4 : Refer to Ⓔ stoppers "C" and "W*" for combination of the stroke adjusting stopper and shock absorber stopper.
*5 : Can be selected for the type with stopper only.
*6 : Refer to the selection table on page 117 for combinations of options.
*7 : A1**, A2**, A5** and A6** of ø12 to ø25 with 20 mm stroke length or less are made to order, since adjustment is not possible with the standard stopper.
*8 : Select when using rear piping.
*9 : Can be selected only when using stroke adjusting stopper (S) and one side mixed type (C).
*10 : When two switches are necessary or a switch is installed on the head side of W3 to 6 (two-sided concurrently-used double stopper) of ø12 with 30 mm stroke length or ø16 with 30 mm stroke length, select the axial lead wire.
*11 : Cannot be selected with the two-sided combined (W).
*12 : The adjustable stroke range with the two-sided combined (W) is ø12: 14.5 mm, ø16: 15 mm, ø20: 13 mm, ø25: 10 mm.
*13 : The stroke adjusting stopper for 0.3 MPa and over working pressure is the metal sealing.

[Example of model No.]

LCR-F-12-40-F2H-R-A1DT

Model: Linear slide cylinder Double acting/fine speed LCR-F

Ⓐ Bore size : ø12
Ⓑ Stroke length : 40 mm
Ⓒ Switch model No. : Proximity/2-wire
Axial lead wire
Ⓓ Switch quantity : 1 on rod side
Ⓔ Stopper : Shock absorber
Stopper position ①
Ⓕ Option : With side and bottom ports
Material, steel (nitriding)

Ⓔ Stopper

● Stopper position

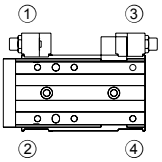

[Ⓔ Stopper]

Code	Description	
Ⓔ Stopper		
Blank	No option	
S Stroke adjusting stopper		*4/*7
S1**	Stopper position ① (can be changed to ④)	Stopper installation position
S2**	Stopper position ② (can be changed to ③)	
S3**	Stopper position ③ (can be changed to ②) *14	
S4**	Stopper position ④ (can be changed to ①) *14	
S5**	Stopper position ①, ③	
S6**	Stopper position ②, ④	
A Shock absorber stopper		*1/*4/*7
A1	Stopper position ① (can be changed to ④)	Stopper installation position
A2	Stopper position ② (can be changed to ③)	
A3	Stopper position ③ (can be changed to ②) *14	
A4	Stopper position ④ (can be changed to ①) *14	
A5	Stopper position ①, ③	
A6	Stopper position ②, ④	
W Two-sided combined double stopper (shock absorber stopper, metal stopper)		*4/*7
W1	A1 + metal stopper	Stopper installation position
W2	A2 + metal stopper	
W3	A3 + metal stopper	
W4	A4 + metal stopper	
W5	A5 + metal stopper	
W6	A6 + metal stopper	

Code	Description	
C One side hybrid stopper mix (shock absorber stopper, stroke adjusting stopper)		
C1**	A1+S3	Stopper installation position
C2**	A2+S4	
C3**	A3+S1	
C4**	A4+S2	

** part Adjustable stroke range ● Compatible with all. ▲ Compatible with some. *9

	Protruding end	Return end	Stopper model No. S	A	W	C
Blank	5 mm or none	5 mm or none	●	-	-	●
02	15 mm or none	15 mm or none	●			●
03	25 mm or none	25 mm or none	●			●
04	15 mm	5 mm	▲			-
05	25 mm	5 mm	▲			-
06	5 mm	15 mm	▲			-
07	5 mm	25 mm	▲			-

*14: When changing the stopper position from the head side to the rod side, the stopper must be purchased separately according to the stroke length and adjustable stroke length. Refer to "Precautions when purchasing discrete stopper" on page 65. A1, A2 and adjustable stroke length of 15 mm and 25 mm may not be available depending on the stroke length.

Stopper model No. selection method

1 Stopper combination table

Model No.-[① Stopper] [② Stopper position] [③] Example) LCR-F-12-40-[S] [5] 06

Stopper position model No. [②]	Stroke adjustable (one side) [S]	Shock absorber (one side) [A]	Two-sided combined double stopper [W]	One side hybrid stopper mix [C]
[1]	[S1] 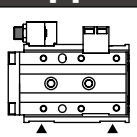	[A1] 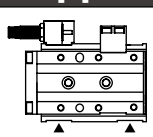	[W1] 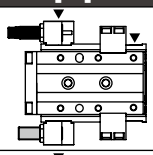	[C1] 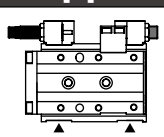
[2]	[S2] 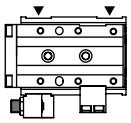	[A2] 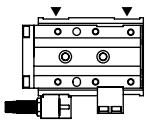	[W2] 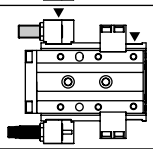	[C2] 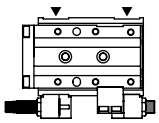
[3]	[S3] 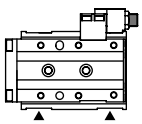	[A3] 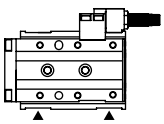	[W3] 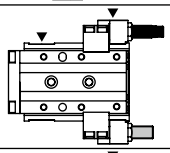	[C3] 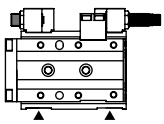
[4]	[S4] 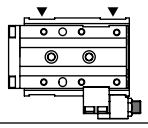	[A4] 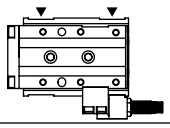	[W4] 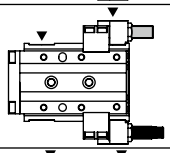	[C4] 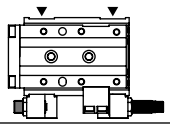
[5]	[S5] 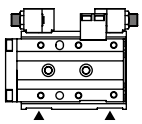	[A5] 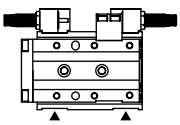	[W5] 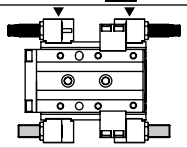	
[6]	[S6] 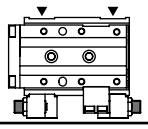	[A6] 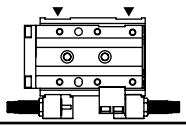	[W6] 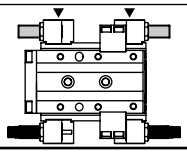	

▲ shows the piping direction.
If two-sided combined (W) is selected, the stopper bracket comes with piping on both sides, ▲ (piping direction) and the reverse side stopper bracket comes with a plug.

■: Shock absorber stopper
■: Stroke adjusting stopper (adjusting range 5 mm)
□: Metal adjusting stopper (adjusting range 15 mm)

LCM
LCR
LCG
LCW
LCX
STM
STG
STS/STL
STR2
UCA2
ULK*
JSK/M2
JSG
JSC3/JSC4
USSD
UFCD
USC
UB
JSB3
LMB
LML
HCM
HCA
LBC
CAC4
UCAC2
CAC-N
UCAC-N
RCS2
RCC2
PCC
SHC
MCP
GLC
MFC
BBS
RRC
GRC
RV3*
NHS
HRL
LN
Hand
Chuk
MecHnd/Chuk
ShkAbs
FJ
FK
SpdContr
Ending

Stopper model No. selection method

2 Stopper combination table

Model No. - [①②Stopper][③Adjustable stroke range]

Example) LCR-F-12-40-S5 [06]

For stroke adjusting stopper -S

: Stroke adjusting stopper (adjusting range 5 mm)
: Stroke adjusting stopper (adjusting range 15 mm)
: Stroke adjusting stopper (adjusting range 25 mm)

		Stopper adjusting range		Stopper model No. [①②]					
		Protruding end	Return end	[S1]	[S2]	[S3]	[S4]	[S5]	[S6]
Adjustable stroke range model No. [③]	Blank	5 mm or none	5 mm or none	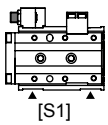 [S1]	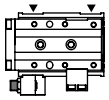 [S2]	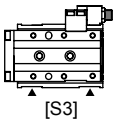 [S3]	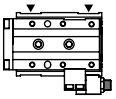 [S4]	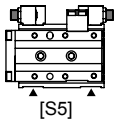 [S5]	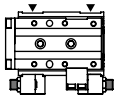 [S6]
	[02]	15 mm or none	15 mm or none	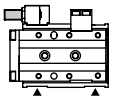 [S102]	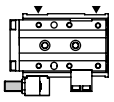 [S202]	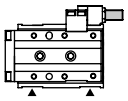 [S302]	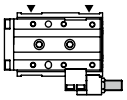 [S402]	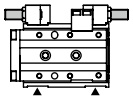 [S502]	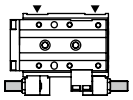 [S602]
	[03]	25 mm or none	25 mm or none	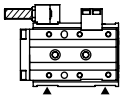 [S103]	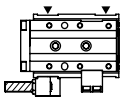 [S203]	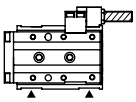 [S303]	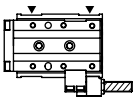 [S403]	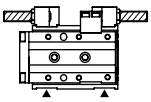 [S503]	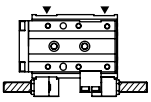 [S603]
	[04]	15 mm	5 mm					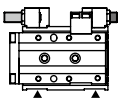 [S504]	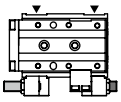 [S604]
	[05]	25 mm	5 mm					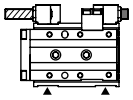 [S505]	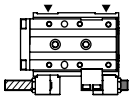 [S605]
	[06]	5 mm	15 mm					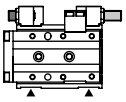 [S506]	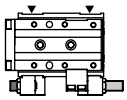 [S606]
	[07]	5 mm	25 mm					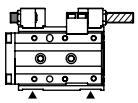 [S507]	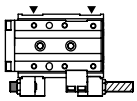 [S607]

▲ shows the piping direction.
Cannot be selected for shock absorber [A] and two-sided combined [W].

3 For one side hybrid stopper mix -C

: Shock absorber stopper
: Stroke adjusting stopper (adjusting range 5 mm)
: Stroke adjusting stopper (adjusting range 15 mm)
: Stroke adjusting stopper (adjusting range 25 mm)

		Stopper adjusting range		Stopper model No. [①②]			
		Protruding end	Return end	[C1]	[C2]	[C3]	[C4]
Adjustable stroke range model No. [③]	Blank	5 mm or shock absorber	5 mm or shock absorber	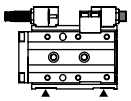 [C1]	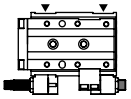 [C2]	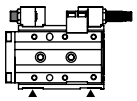 [C3]	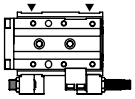 [C4]
	[02]	15 mm or shock absorber	15 mm or shock absorber	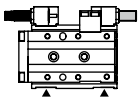 [C102]	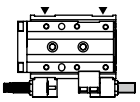 [C202]	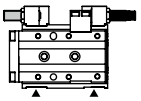 [C302]	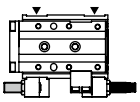 [C402]
	[03]	25 mm or shock absorber	25 mm or shock absorber	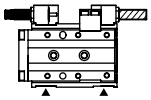 [C103]	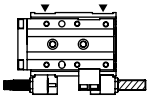 [C203]	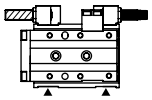 [C303]	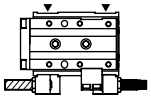 [C403]

▲ shows the piping direction.
For the adjustable stroke range with a shock absorber stopper, refer to the stopper dimensions table on page 82.

LCR Double acting/fine speed selection table

(Combination with stroke adjusting stopper, shock absorber stopper)

●: Available — : Not available

Model No.	Stopper		Stroke adjustable																								
	Stopper code		S1			S2			S3			S4			S5						S6						
			Adjustment length code																								
	Bore size	Stroke mm	Blank	02	03	Blank	02	03	Blank	02	03	Blank	02	03	Blank	02	03	04	05	05	07	Blank	02	03	04	05	06	07
LCR	ø12 to ø25	10	●	—	—	●	—	—	●	●	—	●	●	—	●	—	—	—	—	●	—	●	—	—	—	—	●	—
		20	●	●	—	●	●	—	●	●	●	●	●	●	●	●	—	●	—	●	●	●	●	—	●	—	●	●
		30 or more	●	●	●	●	●	●	●	●	●	●	●	●	●	●	●	●	●	●	●	●	●	●	●	●	●	●

Model No.	Stopper		Shock absorber						Two-sided combined double stopper						One side hybrid stopper mix											
	Stopper code		A1	A2	A3	A4	A5	A6	W1	W2	W3	W4	W5	W6	C1			C2			C3			C4		
															Adjustment length code											
	Bore size	Stroke mm													Blank	02	03	Blank	02	03	Blank	02	03	Blank	02	03
LCR	ø12 to ø25	10	—	—	●	●	—	—	—	—	●	●	—	—	—	—	—	—	—	—	●	—	—	●	—	—
		20	—	—	●	●	—	—	—	—	●	●	—	—	—	—	—	—	—	—	●	●	—	●	●	—
		30 or more	●	●	●	●	●	●	●	●	●	●	●	●	●	●	●	●	●	●	●	●	●	●	●	●

The table above also applies to a combination with option code D (with port on the stopper) or T (steel stopper block (nitriding)).

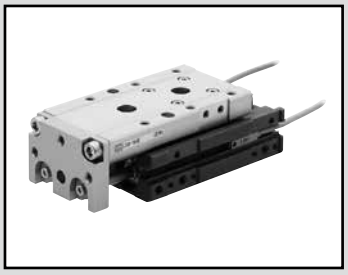

Linear slide cylinder Double acting/fine speed
Clean-room specifications

LCR-F-P7* Series

● Bore size: ø12/ø16/ø20/ø25

JIS symbol

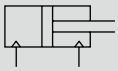

RoHS

Specifications

Item		LCR-P7*			
Bore size mm		ø12	ø16	ø20	ø25
Actuation		Double acting			
Working fluid		Compressed air			
Max. working pressure MPa		0.7 (≈100 psi, 7 bar)			
Min. working pressure MPa		0.15 (≈22 psi, 1.5 bar)			
Proof pressure MPa		1.05 (≈150 psi, 10.5 bar)			
Ambient temperature °C		5 (41°F) to 60 (140°F)			
Port size	Main body side	M5		Rc1/8	
	Main body back	M3		M5	Rc1/8
Pressure relief port size		M5		Rc1/8	
Stroke tolerance mm		$^{+2.0}_{0}$ (*1)			
Working piston speed mm/s		5 to 200 (no load at 0.5 MPa (≈73 psi, 5 bar))			
Cushion		With rubber cushion			
Lubrication		Not available			
Allowable absorbed energy J		Refer to Table 2 on page 122.			

*1: Note that there will be a slight gap between the end plate and floating bush if no stopper is attached.
*2: The stroke adjusting stopper for 0.3 MPa and over working pressure is the metal sealing.

Stroke length

Bore size (mm)	Standard stroke length (mm)
ø12	10, 20, 30, 40, 50, 75, 100
ø16	10, 20, 30, 40, 50, 75, 100, 125
ø20	10, 20, 30, 40, 50, 75, 100, 125, 150
ø25	10, 20, 30, 40, 50, 75, 100, 125, 150

Note: Products with stroke lengths other than the above are not available.

Dimensions

Same as double acting/single rod clean-room specifications. Refer to pages 102 to 110.

Theoretical thrust table

Refer to page 123.

Switch specifications

● 1-color/2-color display

Item	Reed 2-wire				Proximity 2-wire		Proximity 3-wire		
	T0H/T0V		T5H/T5V		T2H/T2V	T2WH/ T2WV	T3H/ T3V	T3PH/ T3PV	T3WH/ T3WV
Applications	For programmable controller, relay		For programmable controller, relay, IC circuit (without indicator lamp), serial connection		Dedicated for programmable controller		For programmable controller, relay		
Output method	-		-		-		NPN output	PNP output	NPN output
Power supply voltage	-		-		-		10 to 28 VDC		
Load voltage	12/24 VDC	110 VAC	5/12/24 VDC	110 VAC	10 to 30 VDC	24 VDC ±10%	30 VDC or less		
Load current	5 to 50 mA	7 to 20 mA	50 mA or less	20 mA or less	5 to 20 mA		100 mA or less		50 mA or less
Indicator lamp	LED (Lit when ON)		Without indicator lamp		LED (Lit when ON)	Red/green LED (Lit when ON)	LED (Lit when ON)	Yellow LED (Lit when ON)	Red/green LED (Lit when ON)
Leakage current	0 mA				1 mA or less		10 μA or less		
Weight g	1 m:18 3 m:49 5 m:80								

Item	Proximity 2-wire	Proximity 3-wire	Proximity 2-wire		Proximity 3-wire		
	F2S	F3S	F2H/F2V	F2YH/ F2YV	F3H/F3V	F3PH/F3PV (Made to order)	F3YH/ F3YV
Applications	Dedicated for programmable controller	For programmable controller, relay	Dedicated for programmable controller		For programmable controller, relay		
Output method	-	NPN output	-		NPN output	PNP output	NPN output
Power supply voltage	-	10 to 28 VDC	-		10 to 28 VDC	4.5 to 28 VDC	10 to 28 VDC
Load voltage	10 to 30 VDC	30 VDC or less	10 to 30 VDC	24 VDC ±10%	30 VDC or less		
Load current	5 to 20 mA	50 mA or less	5 to 20 mA		50 mA or less		
Indicator lamp	LED (Lit when ON)		Yellow LED (Lit when ON)	Red/green LED (Lit when ON)	Yellow LED (Lit when ON)		Red/green LED (Lit when ON)
Leakage current	1 mA or less	10 μA or less	1 mA or less		10 μA or less		
Weight g	1 m:10 3 m:29						

*1 : Refer to Ending Page 1 for detailed switch specifications and dimensions.
*2 : Switches other than the above models, such as switches with connectors, are also available. Refer to Ending Page 1.
*3 : The max. load current is 20 mA at 25°C. The current is lower than 20 mA if the operating ambient temperature around the switch is higher than 25°C. (5 to 10 mA at 60°C)
*4 : The F type switch uses a bend-resistant lead wire.

Cylinder weight

● Clean-room specifications (Unit: g)

Bore size (mm)	Fine speed Stroke length (mm)								
	10	20	30	40	50	75	100	125	150
ø12	400	410	410	450	480	610	700	-	-
ø16	620	630	630	680	740	970	1,100	1,240	-
ø20	1,160	1,170	1,180	1,260	1,350	1,650	1,860	2,070	2,280
ø25	2,010	2,030	2,040	2,150	2,250	2,740	3,010	3,280	3,550

● Weight of variation/option (stopper) (Unit: g)

Bore size (mm)	Option/stopper code	
	S1 to S4	S5/S6
ø12	70	100
ø16	110	150
ø20	170	250
ø25	290	380

How to order

Without switch (built-in magnet for switch)

LCR-F-12-40 ——— S506 DT P72

With switch (built-in magnet for switch)

LCR-F-12-40-F2H*-R-S506 DT P72

Model No.

Ⓐ Bore size

Ⓑ Stroke length

Ⓒ Switch model No.

Ⓓ Switch quantity

Ⓔ Stopper

Ⓕ Option

Ⓖ Clean-room specifications

⚠ Precautions for model No. selection

*1 : For the port position, refer to the stopper dimensions on page 110.
*2 : The port positions of the standard without stopper are ① and ③ in the figure below.
*3 : Can be selected for the type with stopper only.
*4 : Select when using rear piping.
*5 : The stroke adjusting stopper for 0.3 MPa and over working pressure is the metal sealing.
*6 : When changing the stopper position from the head side to the rod side, the stopper must be purchased separately according to the stroke length and adjustable stroke length. Refer to "Precautions when purchasing discrete stopper" on page 65.
Adjustable stroke lengths of 15 mm and 25 mm may not be possible depending on the stroke length.

[Example of model No.]

LCR-F-12-40-F2H*-R-S1DT-P72

Model: Linear slide cylinder Double acting/fine speed (clean-room specifications) LCR-F-P7*

Ⓐ Bore size : ø12
Ⓑ Stroke length : 40 mm
Ⓒ Switch model No. : Proximity/2-wire Axial lead wire
Ⓓ Switch quantity : 1 on rod side
Ⓔ Stopper : Stroke adjusting stopper Stopper position ①
Ⓕ Option : Port on the stopper: Side and bottom ports Stopper block material: Steel (nitriding)
Ⓖ Clean-room specifications : Exhaust port

● Stopper position

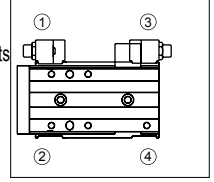

Code	Description
Ⓐ Bore size	
12	ø12
16	ø16
20	ø20
25	ø25

Ⓑ Stroke length (mm)

		Bore size (ø)			
		12	16	20	25
10	10	●	●	●	●
20	20	●	●	●	●
30	30	●	●	●	●
40	40	●	●	●	●
50	50	●	●	●	●
75	75	●	●	●	●
100	100	●	●	●	●
125	125		●	●	●
150	150			●	●

Ⓒ Switch model No.

Axial lead wire	Radial lead wire	Contact	Voltage AC	Voltage DC	Indicator lamp	Lead wire	Bore size ø12	ø16	ø20	ø25
-	F2S*	Proximity		●	1-color display	2-wire	●			
-	F3S*	Proximity		●	1-color display	3-wire	●			
F2H*	F2V*	Proximity		●	1-color display	2-wire	●			
F3H*	F3V*	Proximity		●	1-color display	3-wire	●			
F3PH*	F3PV*	Proximity		●	1 color display (PNP output) (made to order)	3-wire	●			
F2YH*	F2YV*	Proximity		●	2-color display	2-wire	●			
F3YH*	F3YV*	Proximity		●	2-color display	3-wire	●			
T0H*	T0V*	Reed	●	●	1-color display	2-wire		●	●	●
T5H*	T5V*	Reed	●	●	no indicator lamp	2-wire		●	●	●
T2H*	T2V*	Proximity		●	1-color display	2-wire		●	●	●
T3H*	T3V*	Proximity		●	1-color display	3-wire		●	●	●
T3PH*	T3PV*	Proximity		●	1 color display (PNP output)	3-wire		●	●	●
T2WH*	T2WV*	Proximity		●	2-color display	2-wire		●	●	●
T3WH*	T3WV*	Proximity		●	2-color display	3-wire		●	●	●

Lead wire length

Blank	1 m (standard)	●
3	3 m (option)	●
5	5 m (option)	●

Ⓓ Switch quantity

R	1 on rod side	●
H	1 on head side	●
D	2	●

Ⓔ Stopper

Blank	No option		●
S Stroke adjusting stopper 5 mm stroke adjustment on one side			
S1**	Stopper position ① (can be changed to ④)	Stopper installation position	●
S2**	Stopper position ② (can be changed to ③)*6	Stopper installation position	●
S3**	Stopper position ③ (can be changed to ②)*6	Stopper installation position	●
S4**	Stopper position ④ (can be changed to ①)*6	Stopper installation position	●
S5**	Stopper position ①,③	Stopper installation position	●
S6**	Stopper position ②,④	Stopper installation position	●

** part Adjustable stroke range ● Compatible with all. ▲ Compatible with some.*3

	Protruding end	Return end	
Blank	5 mm or none	5 mm or none	●
02	15 mm or none	15 mm or none	●
03	25 mm or none	25 mm or none	●
04	15 mm	5 mm	▲
05	25 mm	5 mm	▲
06	5 mm	15 mm	▲
07	5 mm	25 mm	▲

Ⓕ Option

Blank	Port on the stopper: without port	●
D	Port on the stopper: side and bottom ports	● *1, *3
Blank	Stopper block material: steel	●
T	Stopper block material: steel (nitriding)	● *3
Plug attached		
Blank	None	
N	With side piping port plug (not available for ø25) *4	

Ⓖ Clean-room specifications

	Structure
P72	Exhaust port
P73	Vacuum treatment

LCM
LCR
LCG
LCW
LCX
STM
STG
STS/STL
STR2
UCA2
ULK*
JSK/M2
JSG
JSC3/JSC4
USSD
UFCD
USC
UB
JSB3
LMB
LML
HCM
HCA
LBC
CAC4
UCAC2
CAC-N
UCAC-N
RCS2
RCC2
PCC
SHC
MCP
GLC
MFC
BBS
RRC
GRC
RV3*
NHS
HRL
LN
Hand
Chuk
MecHnd/Chuk
ShkAbs
FJ
FK
SpdContr
Ending

Stopper model No. selection method

Stopper combination table

Model No.-[①②Stopper] [③ Adjustable stroke range]

Example) LCR-F-12-40- [S5] [06]-P7*

For stroke adjusting stopper -S

Adjustable stroke range Model No. [③]	Stopper adjusting range: Protruding end	Stopper adjusting range: Return end	Stopper model No. [①②] [S1]	[S2]	[S3]	[S4]	[S5]	[S6]
Blank	5 mm or none	5 mm or none	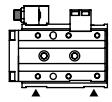 [S1]	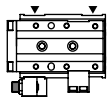 [S2]	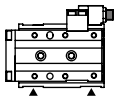 [S3]	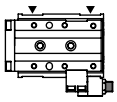 [S4]	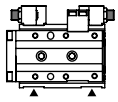 [S5]	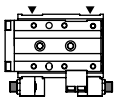 [S6]
[02]	15 mm or none	15 mm or none	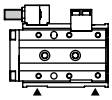 [S102]	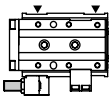 [S202]	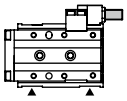 [S302]	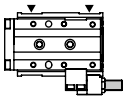 [S402]	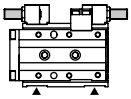 [S502]	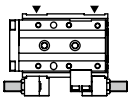 [S602]
[03]	25 mm or none	25 mm or none	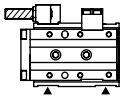 [S103]	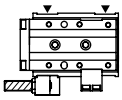 [S203]	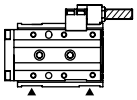 [S303]	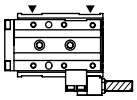 [S403]	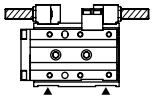 [S503]	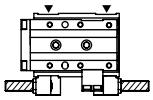 [S603]
[04]	15 mm	5 mm					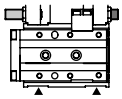 [S504]	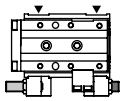 [S604]
[05]	25 mm	5 mm					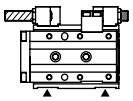 [S505]	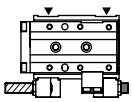 [S605]
[06]	5 mm	15 mm					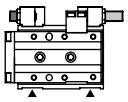 [S506]	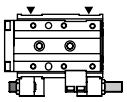 [S606]
[07]	5 mm	25 mm					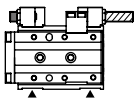 [S507]	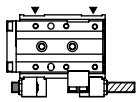 [S607]

▬: Stroke adjusting stopper (adjusting range 5 mm)
▭: Stroke adjusting stopper (adjusting range 15 mm)
▨: Stroke adjusting stopper (adjusting range 25 mm)

▲ shows the piping direction.

Selection table

●: Available —: Not available

Bore size (mm)		Stopper code																								
		S1			S2			S3			S4			S5							S6						
		Adjustment length code																								
		Blank	02	03	Blank	02	03	Blank	02	03	Blank	02	03	Blank	02	03	04	05	06	07	Blank	02	03	04	05	06	07
ø12 to ø25	10st	●	—	—	●	—	—	●	●	—	●	●	—	●	—	—	—	—	●	—	●	—	—	—	—	●	—
	20st	●	●	—	●	●	—	●	●	●	●	●	●	●	●	—	●	—	●	●	●	●	—	●	—	●	●
	30st up	●	●	●	●	●	●	●	●	●	●	●	●	●	●	●	●	●	●	●	●	●	●	●	●	●	●

LCM
LCR
LCG
LCW
LCX
STM
STG
STS/STL
STR2
UCA2
ULK*
JSK/M2
JSG
JSC3/JSC4
USSD
UFCD
USC
UB
JSB3
LMB
LML
HCM
HCA
LBC
CAC4
UCAC2
CAC-N
UCAC-N
RCS2
RCC2
PCC
SHC
MCP
GLC
MFC
BBS
RRC
GRC
RV3*
NHS
HRL
LN
Hand
Chuk
MecHnd/Chuk
ShkAbs
FJ
FK
SpdContr
Ending

STEP 1

❶Calculate the load and the moment of impact occurring at the stroke end in different directions.

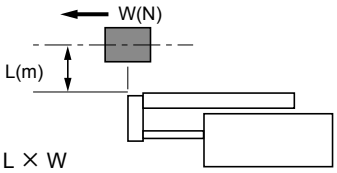

M1' = L × W

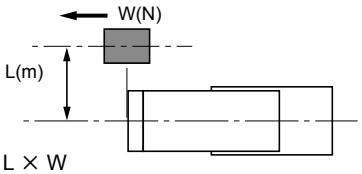

M3' = L × W

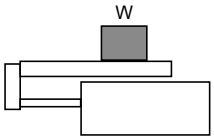

W' = W

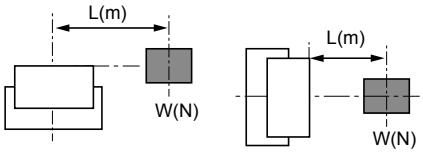

M2' = L × W

Obtain an approximate G coefficient in [Table 1].

[Table 1] Va (average speed) = $\frac{\text{Travel distance}}{\text{Travel time}}$ (m/s)

Va Average speed (m/s)	Vm Stroke end speed (m/s)	G coefficient
to 0.07	to 0.1	5
to 0.2	to 0.3	14
to 0.27	to 0.4	19
to 0.35	to 0.5	24

G coefficient = ☐

M1' x G = ☐ (N·m)

M2' = ☐ (N·m)

M3' x G = ☐ (N·m)

W' = ☐ (N)

$E' = \frac{1}{2} \times (m + m_\alpha) \times Vm^2$

= ☐ (J)

$(m \approx \frac{W}{9.8})$

❷Select a temporary bore size that satisfies the following formula.

$$M'_T = \frac{M1' \times G}{M1'max} + \frac{M2'}{M2'max} + \frac{M3' \times G}{M3'max} + \frac{W'}{W'max} < 1$$

E' < E max

M'_T : Resultant moment (must be smaller than 1)

G : G coefficient

W'max : Max. allowable value of W' (from Table 2)

M1'max : Max. allowable value of M1' (from Table 2)

M2'max : Max. allowable value of M2' (from Table 2)

M3'max : Max. allowable value of M3' (from Table 2)

E max : Max. allowable value of Eo (from Table 3)

m_α : Table weight (from Table 4)

[Table 2] Allowable static load

Bore size	Stroke length (mm)	Vertical load W'max(N)	Bending moment M1' max (N·m)	Radial moment M2' max (N·m)	Torsion moment M3' max (N·m)
ø6	10 to 30	140	1.7	3.5	1.7
	40 to 50	186	10.7	5.6	10.7
ø8	10 to 30	140	1.7	3.5	1.7
	40 to 75	186	10.7	5.6	10.7
ø12	10 to 50	220.8	5.7	9.8	5.7
	75 to 100		22.2		22.2
ø16	10 to 50	380.8	17.8	19.2	17.8
	75 to 125		37.3		37.3
ø20	10 to 50	548.8	31.1	37.6	31.1
	75 to 150		56.2		56.2
ø25	10 to 50	961.5	65.1	116.3	65.1
	75 to 150		127.5		127.5

Note: When attaching a load to the end plate, even if selecting long stroke length (ø6, 8: 40 or more, ø12 or more: 75 or more), calculate the allowable values with short stroke length (ø6, 8: 30 or less, ø12 or more: 50 or less).

[Table 3] LCR allowable absorbed energy (Eo)

Bore size	Standard (J)	With stroke adjusting stopper (J)	With shock absorber stopper (J)
ø6	0.025	0.0032	0.14
ø8	0.058	0.0032	0.25
ø12	0.112	0.014	0.25
ø16	0.176	0.043	0.65
ø20	0.314	0.055	1.3
ø25	0.314	0.14	1.3

[Table 4] Table weight (Unit: kg)

Bore size	Stroke length (mm)									P72/P73 added	B/BL added
	10	20	30	40	50	75	100	125	150		
ø6	0.035	0.035	0.04	0.05	0.055	-	-	-	-	0.005	0.030
ø8	0.055	0.055	0.06	0.075	0.08	0.095	-	-	-	0.015	0.030
ø12	0.13	0.13	0.13	0.14	0.155	0.195	0.225	-	-	0.025	0.060
ø16	0.185	0.185	0.185	0.2	0.215	0.285	0.325	0.365	-	0.035	0.070
ø20	0.29	0.29	0.29	0.315	0.335	0.415	0.47	0.525	0.585	0.045	0.140
ø25	0.505	0.505	0.505	0.54	0.58	0.745	0.835	0.925	1.015	0.075	0.310

STEP 2

Next, obtain a more accurate load factor, effective thrust, stroke end speed and resultant moment.

● Calculate the load factor.

$$\alpha = \frac{Fo}{F} \times 100\ [\%]$$

α : Load factor

Fo : Force (N) required to move the workpiece

F : Cylinder theoretical thrust (N) [Table 5]

For horizontal operation	For vertical operation
Fo = Fw	Fo = W+Fw
FW: W x 0.2 Note (N)	
W: Load (N)	

Note: Coefficient of friction

[Table 5] Theoretical thrust table (Unit: N)

Bore size (mm)	Operating direction	Working pressure MPa						
		0.15	0.2	0.3	0.4	0.5	0.6	0.7
ø6	PUSH	8	11	17	23	28	34	40
	PULL	6	8	13	17	21	25	30
ø8	PUSH	15	20	30	40	50	60	70
	PULL	11	15	23	30	38	45	53
ø12	PUSH	34	45	68	90	113	136	158
	PULL	25	34	51	68	85	102	119
ø16	PUSH	60	80	121	161	201	241	281
	PULL	52	69	104	138	173	207	242
ø20	PUSH	94	126	188	251	314	377	440
	PULL	79	106	158	211	264	317	369
ø25	PUSH	147	196	295	393	491	589	687
	PULL	124	165	247	330	412	495	577

[Table 6] Load factor guidelines

Working pressure MPa	Load factor (%)
0.2 to 0.3	α ≤ 40
0.3 to 0.6	α ≤ 50
0.6 to 0.7	α ≤ 60

STEP 3

Obtain the stroke end speed (Vm) and G coefficient from the average speed (Va) and load factor obtained in STEP 2.

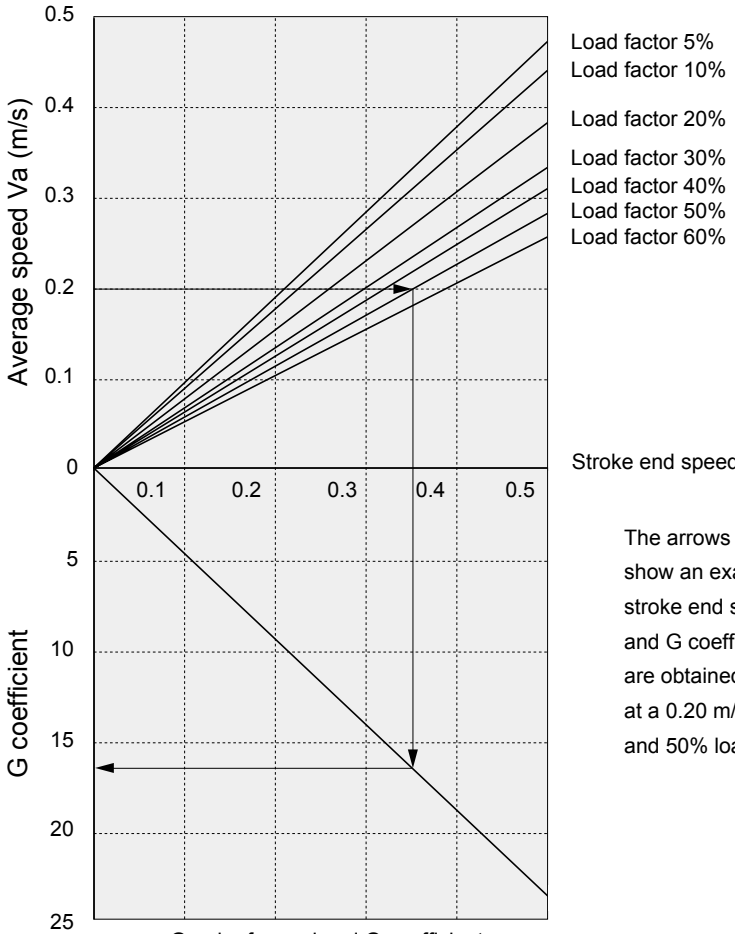

The arrows (→) in the figure show an example in which stroke end speed of 0.35 m/s and G coefficient of 16.8 are obtained at a 0.20 m/s average speed and 50% load factor.

Graph of speed and G coefficient
G coefficient = ☐

LCM
LCR
LCG
LCW
LCX
STM
STG
STS/STL
STR2
UCA2
ULK*
JSK/M2
JSG
JSC3/JSC4
USSD
UFCD
USC
UB
JSB3
LMB
LML
HCM
HCA
LBC
CAC4
UCAC2
CAC-N
UCAC-N
RCS2
RCC2
PCC
SHC
MCP
GLC
MFC
BBS
RRC
GRC
RV3*
NHS
HRL
LN
Hand
Chuk
MecHnd/Chuk
ShkAbs
FJ
FK
SpdContr
Ending

STEP 4

Calculate the resultant moment (M_T) from the G coefficient and stroke end speed (Vm) obtained in STEP 3.

M1' x G = ☐ (N·m)

M2' = ☐ (N·m)

M3' x G = ☐ (N·m)

W' = ☐ (N)

$$M'_T = \frac{M1' \times G}{M1'max} + \frac{M2'}{M2'max} + \frac{M3' \times G}{M3'max} + \frac{W'}{W'max} = \square$$

Obtain M_T (resultant moment during movement). (Note that it differs from that obtained in STEP 1.)

● Vertical load: W (N)

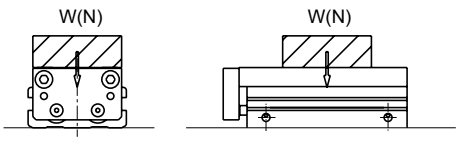

● Bending moment: M1 (N·m)

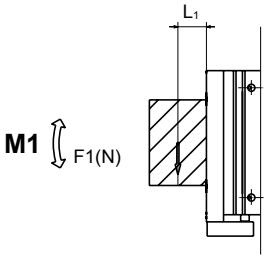

$M1=F1 \times L_1$

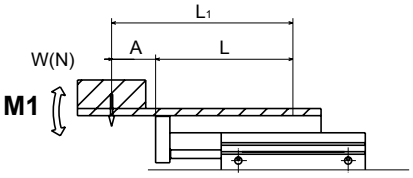

$M1=W \times L_1$
$L_1=A+L$
L is value in table below

● Radial moment: M2 (N·m)

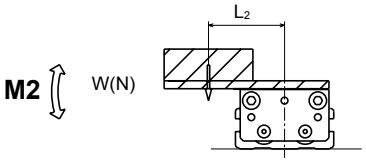

$M2=W \times L_2$

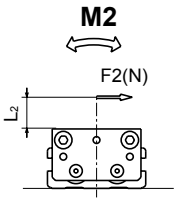

$M2=F2 \times L_2$

● Torsion moment: M3 (N·m)

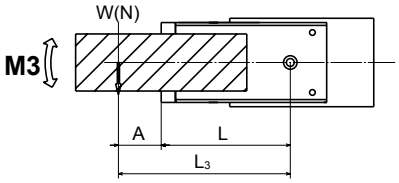

$M3=W \times L_3$
$L_3=A+L$
L is value in table below

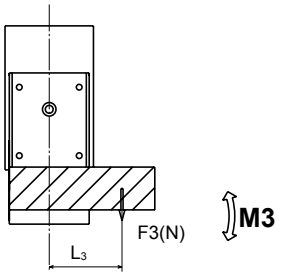

$M3=F3 \times L_3$

L value

Unit (m)

Bore size	Stroke length									P72/P73 added	B/BL added
	10	20	30	40	50	75	100	125	150		
ø6	0.048	0.048	0.058	0.073	0.083	-	-	-	-	0.012	0.0165
ø8	0.048	0.048	0.058	0.072	0.082	0.107	-	-	-	0.020	0.0145
ø12	0.067	0.067	0.067	0.077	0.087	0.117	0.142	-	-	0.020	0.018
ø16	0.071	0.071	0.071	0.081	0.091	0.124	0.149	0.174	-	0.020	0.019
ø20	0.081	0.081	0.081	0.091	0.101	0.126	0.151	0.176	0.201	0.025	0.020
ø25	0.085	0.085	0.085	0.095	0.105	0.14	0.165	0.19	0.215	0.025	0.023

M1=M1 = [ ] (N·m)

M2=M2 = [ ] (N·m)

M3=M3 = [ ] (N·m)

W=W = [ ] (N)

$$M_T = \frac{M1}{M1max} + \frac{M2}{M2max} + \frac{M3}{M3max} + \frac{W}{Wmax} = [\quad]$$

M_T : Synthesis of moment

Wmax : Max. allowable value of W (from Table 7)

M1max : Max. allowable value of M1 (from Table 7)

M2max : Max. allowable value of M2 (from Table 7)

M3max : Max. allowable value of M3 (from Table 7)

E max : Max. allowable value of Eo (from Table 3)

[Table 7] Allowable running load

Bore size	Stroke length (mm)	Vertical load Wmax (N)	Bending moment M1max (N·m)	Radial moment M2max (N·m)	Torsion moment M3max (N·m)
ø6	10 to 30	14	0.17	0.35	0.17
	40 to 50	15.5	0.89	0.47	0.89
ø8	10 to 30	14	0.17	0.35	0.17
	40 to 75	15.5	0.89	0.47	0.89
ø12	10 to 50	27.6	0.71	1.2	0.71
	75 to 100		2.2		2.2
ø16	10 to 50	47.6	1.9	2.4	1.9
	75 to 125		4.6		4.6
ø20	10 to 50	68.6	3.4	4.7	3.4
	75 to 150		7.0		7.0
ø25	10 to 50	128.2	7.6	15.5	7.6
	75 to 150		17.0		17.0

Note: When attaching a load to the end plate, even if selecting long stroke length (ø6, 8: 40 or more, ø12 or more: 75 or more), calculate the allowable values with short stroke length (ø6, 8: 30 or less, ø12 or more: 50 or less).

Confirm M_T, $M'_T \leq 1$.

↓

Bore size is decided.

↓

øA

STEP 5

Confirming allowable absorbed energy

$$E = \frac{1}{2} \times (m + m_\alpha) \times Vm^2$$

E : Kinetic energy at workpiece end (J)

m : Load weight (kg) ($m \approx \frac{W(N)}{9.8}$)

m_α : Table weight (from Table 4)

Vm : Stroke end speed (m/s)

E max : Max. allowable value of Eo (from Table 3)

Confirm E ≤ E max.

↓

Bore size is decided.

↓

øB

STEP 6

Bore size decided in STEP 4
(load conditions)

øA

Bore size decided in STEP 5
(allowable absorbed energy)

øB

øA < øB → øB Select.

or → øA and external damper are used together or a shock absorber stopper is attached.

øA>øB → øA Select.

Selection confirmation graph of shock absorber stopper

1. This is a simplified confirmation graph for shock absorber stoppers. The area inside the graph is the usable range. Select a bore size for shock absorber mounting within the usable range.
2. Simplified selection graph lists the pneumatic pressure value used for the cylinder at 0.5 MPa.
3. The absorbed energy of the shock absorber varies depending on the temperature. The simplified confirmation graph lists the value at room temperature.
4. Colliding object weight is the sum of load weight m and table weight ma.

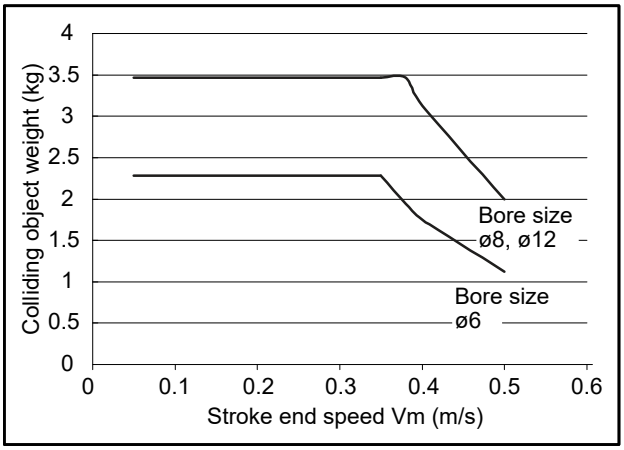

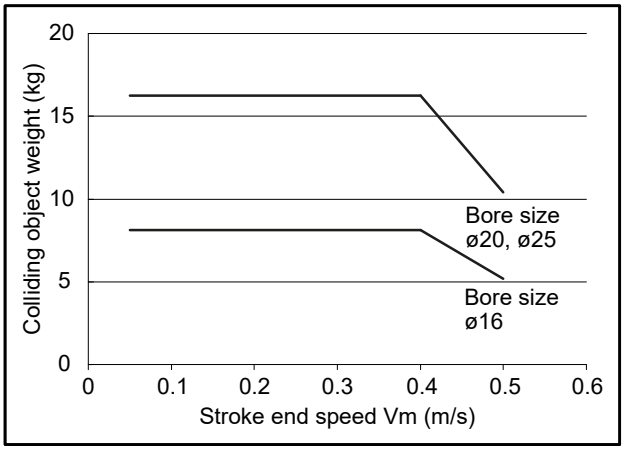

LCM
LCR
LCG
LCW
LCX
STM
STG
STS/STL
STR2
UCA2
ULK*
JSK/M2
JSG
JSC3/JSC4
USSD
UFCD
USC
UB
JSB3
LMB
LML
HCM
HCA
LBC
CAC4
UCAC2
CAC-N
UCAC-N
RCS2
RCC2
PCC
SHC
MCP
GLC
MFC
BBS
RRC
GRC
RV3*
NHS
HRL
LN
Hand
Chuk
MecHnd/Chuk
ShkAbs
FJ
FK
SpdContr
Ending

Displacement at point A

[Displacement of table due to M1 moment]

Displacement at the table end when load (F1) is applied to the table end

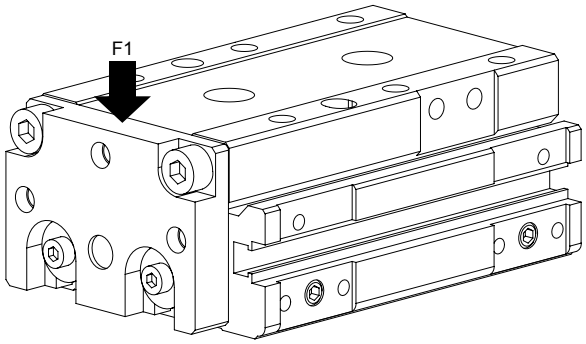

LCR-6(M1)

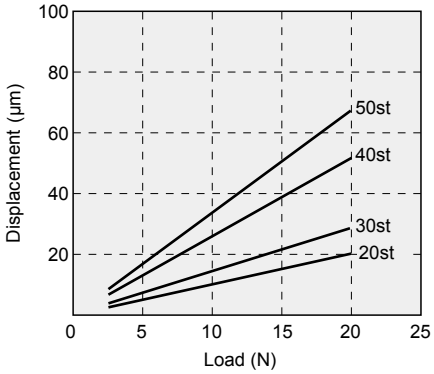

LCR-8(M1)

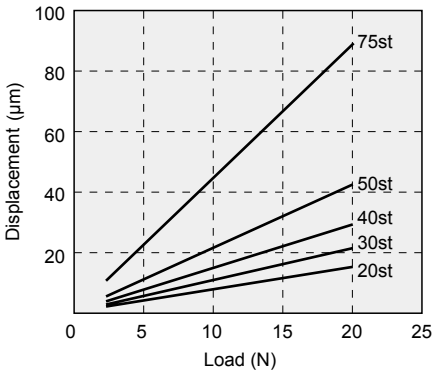

LCR-12(M1)

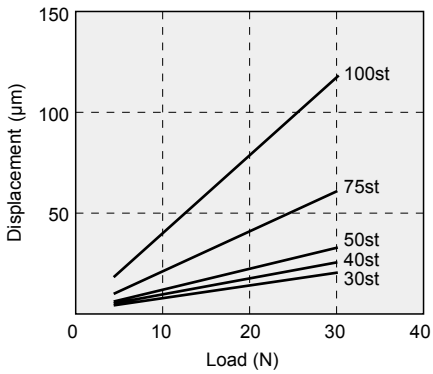

LCR-16(M1)

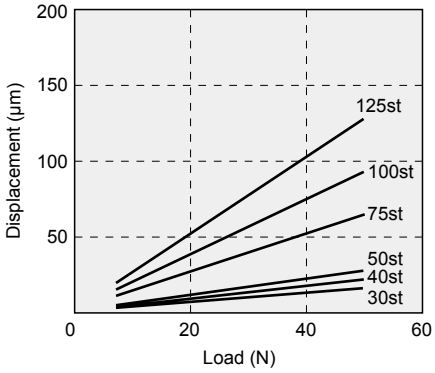

LCR-20(M1)

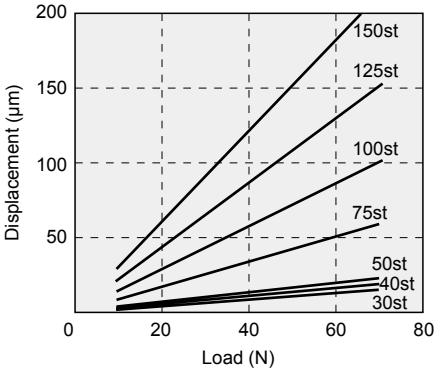

LCR-25(M1)

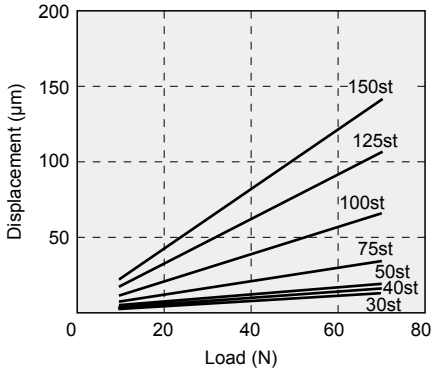

LCM
LCR
LCG
LCW
LCX
STM
STG
STS/STL
STR2
UCA2
ULK*
JSK/M2
JSG
JSC3/JSC4
USSD
UFCD
USC
UB
JSB3
LMB
LML
HCM
HCA
LBC
CAC4
UCAC2
CAC-N
UCAC-N
RCS2
RCC2
PCC
SHC
MCP
GLC
MFC
BBS
RRC
GRC
RV3*
NHS
HRL
LN
Hand
Chuk
MecHnd/Chuk
ShkAbs
FJ
FK
SpdContr
Ending

Displacement at point A

[Displacement of table due to M2 moment]

Displacement at the table end (point A) when load (F2) is applied to a point L mm away from the center of the cylinder

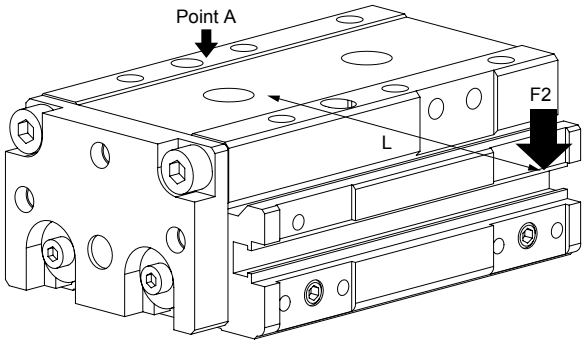

L value
ø 6: L= 70, ø 8: L= 70
ø12: L= 90, ø16: L=100
ø20: L=100, ø25: L=200

LCR-6(M2)

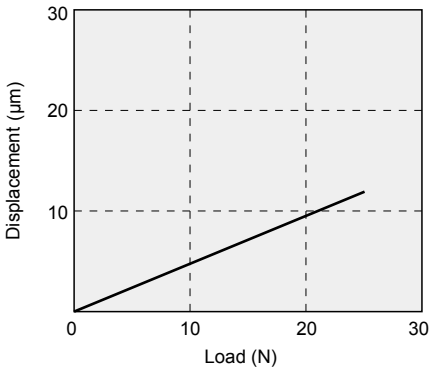

LCR-8(M2)

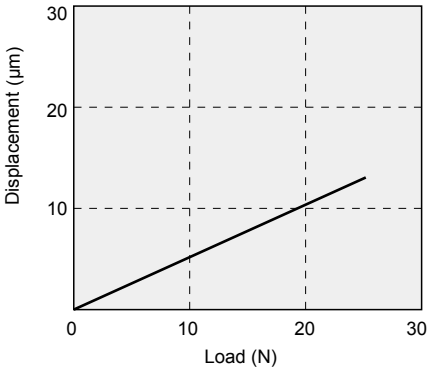

LCR-12(M2)

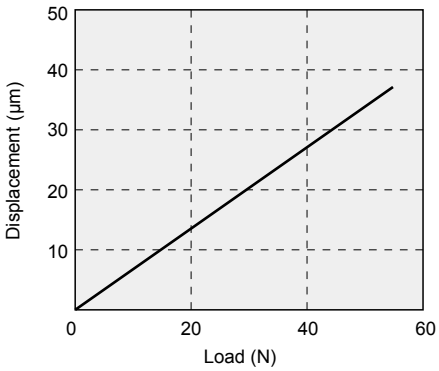

LCR-16(M2)

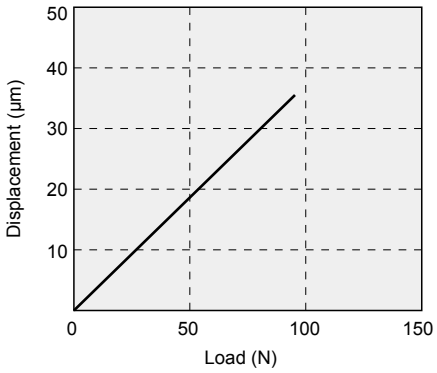

LCR-20(M2)

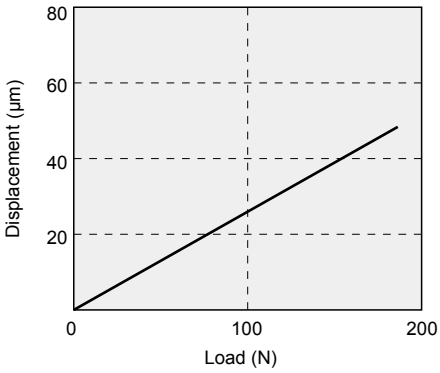

LCR-25(M2)

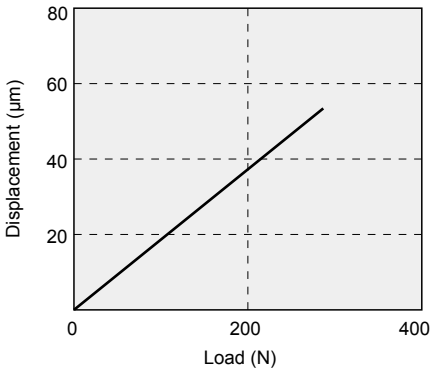

LCM
LCR
LCG
LCW
LCX
STM
STG
STS/STL
STR2
UCA2
ULK*
JSK/M2
JSG
JSC3/JSC4
USSD
UFCD
USC
UB
JSB3
LMB
LML
HCM
HCA
LBC
CAC4
UCAC2
CAC-N
UCAC-N
RCS2
RCC2
PCC
SHC
MCP
GLC
MFC
BBS
RRC
GRC
RV3*
NHS
HRL
LN
Hand
Chuk
MecHnd/Chuk
ShkAbs
FJ
FK
SpdContr
Ending

Displacement at point A

[Displacement of table due to M3 moment]

Displacement angle of the table when rotation moment (M3) is applied to the cylinder

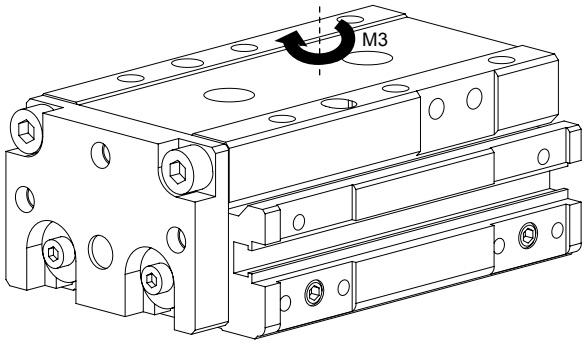

LCR-6(M3)

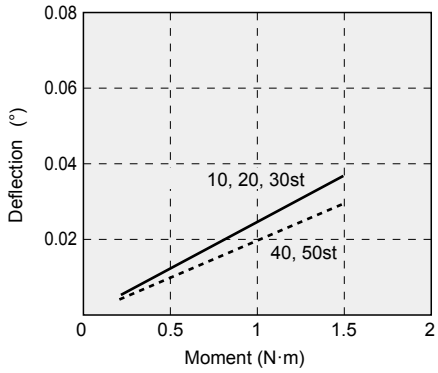

LCR-8(M3)

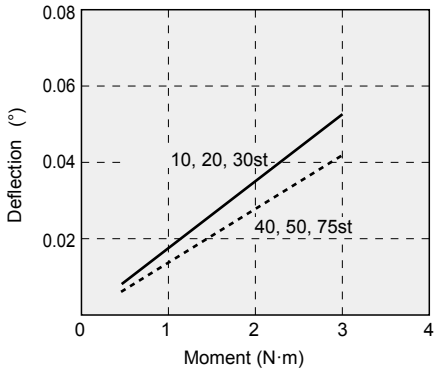

LCR-12(M3)

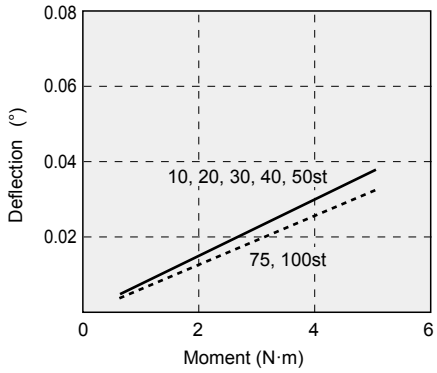

LCR-16(M3)

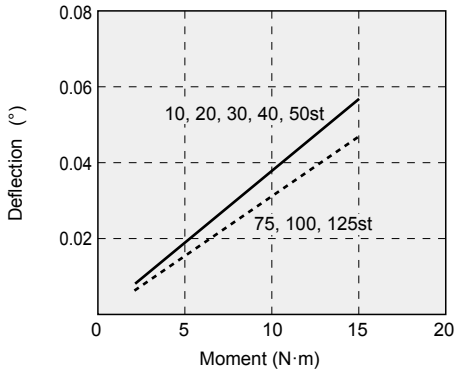

LCR-20(M3)

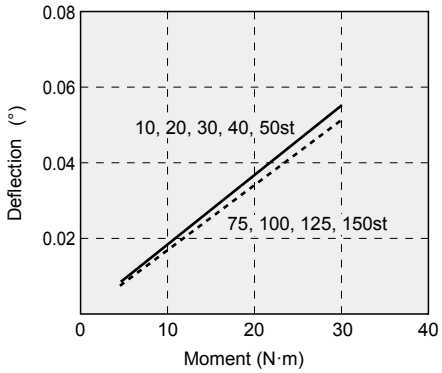

LCR-25(M3)

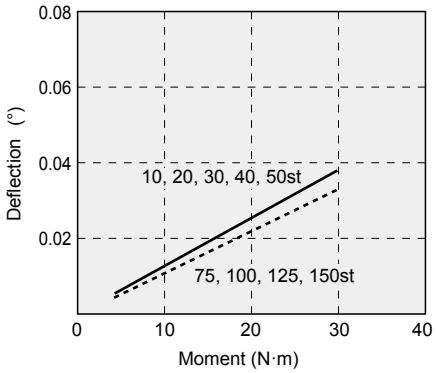

Pneumatic components

Safety Precautions

Be sure to read this section before use.

Refer to Intro Page 73 for general information of the cylinder, and to Intro Page 80 for general information of the cylinder switch.

Product-specific cautions: Linear slide cylinder LCR Series

Design/selection

1. Common

CAUTION

■ When selecting the cylinder, follow the "LCR Selection guide" on pages 122 to 125.

■ Protect the cylinder with a cover to prevent damage and malfunction in a place where it is exposed to dripping water or oil, corrosive conditions or much dust.

■ Precautions for type with switch

- When using the T □ V switch with a stroke adjusting stopper (S3**/S4**/S5**/S6**) or shock absorber stopper (A3**/A4**/A5**/A6**), install the switch on the opposite side to the stopper. Otherwise the switch on the head side will make contact with the stopper.
- Be careful of the lead wire direction when designing the 30 mm or less stroke length, since a switch is installed in each groove of the body.

2. Position locking LCR-Q

CAUTION

■ Do not use 3-position valves.

Avoid using the cylinder in combination with 3-position (especially closed center metal seal) valves. If the port at the side where the lock mechanism is provided is pressurized, the lock cannot be engaged. Even if it is locked once, the air leaked from the valve enters the cylinder, and the lock may be released after a certain period of time.

3. Fine speed LCR-F

CAUTION

■ Use without lubrication.

Applying lubrication may cause changes in characteristics.

■ Assemble the speed controller near the cylinder.

When installed far from the cylinder, the speed becomes unstable.
Use the SC-M3/M5-F, SC3W, SCD-M3/M5 or SC3U Series speed controllers.

■ In general, the speed is stabler at higher air pressure and lower load factor.

Use at a 50% or less load factor.

■ Stable speed control is achieved with a meter-out circuit.

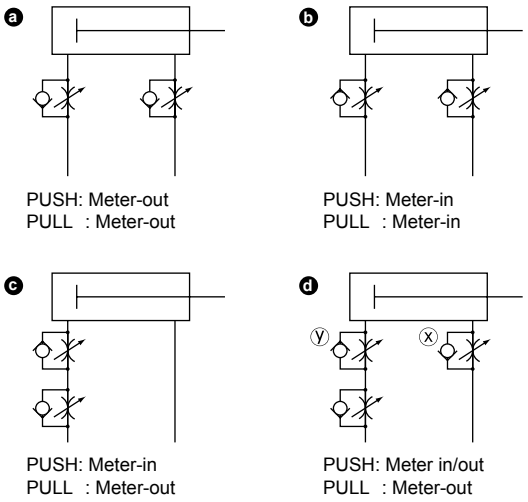

When fine speed activation is performed with operating direction PUSH for the single rod cylinder, the popping out phenomenon occurs when operation starts if the load resistance is low. For countermeasures, use the b, c or d circuit.

Note that circuit d is the most stable.

Speed adjustment method for PUSH operation of d circuit:

1. Set the speed with the speed controller x.
2. Restrict the speed with the speed controller y until there is no popping out.
3. Check the speed again.

(*1) When comparing b, c and d, operation is the most stable with the d circuit.

(*2) For vertical mounting, combine the cylinder with a meter-out circuit, as it will fall under its own weight when a meter-in circuit is used.

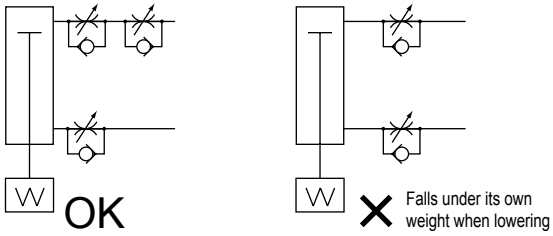

(*3) Use the circuit shown in the figure below for the serial connection of the speed controllers.

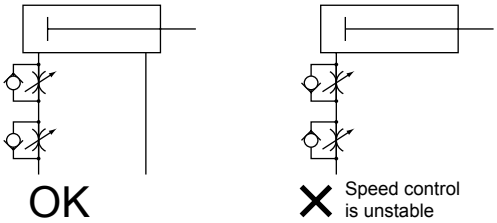

(Guidelines for pop-out generation)

Popping out occurs in the following cases.

· Thrust > Resistance

* Resistance: Thrust caused by residual pressure on the exhaust side (in the fine speed, supply pressure = residual pressure) + { When using horizontally: frictional force caused by load / When using vertically: load self-weight

Design/selection

■ Do not apply a lateral load to the cylinder.
With a lateral load, operation will become unstable.

■ Avoid using this product where vibration is present.
The product will be adversely affected by vibration and operation will become unstable.

Mounting, installation and adjustment

1. Common; when piping

⚠ CAUTION

■ Apply adhesive to the M3 and M5 plugs (hexagon socket set screws) when changing the piping port position. (Low strength adhesives such as LOCTITE 222/221 or ThreeBond 1344 are recommended)

■ Piping port position and operating direction

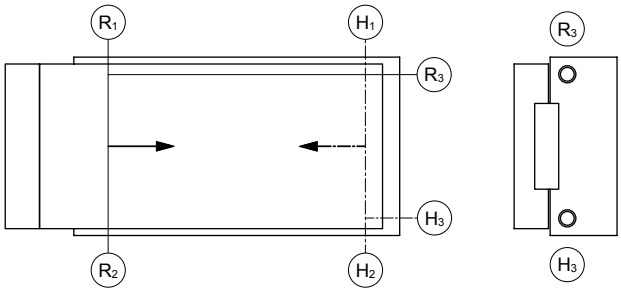

Ⓡ shows the rod side pressurizing port and Ⓗ the head side pressurizing port. When the product is shipped from the factory, ports other than R_1 and H_1 (R_2 and H_2 depending on the stopper position when a stopper is attached) are sealed with plugs.

■ Rear piping
Rear piping (ports R_3 and H_3 in the figure above) is possible except in the case of ø6 and position locking. Remove the plugs sealing ports R_3 and H_3 and seal ports R_1 and H_1 with the plugs shown in the table below.

Item	Plug
LCR-6	No R_3, H_3 port.
LCR-8	M5 x 5 (Hexagon socket set screw)
LCR-12	
LCR-16	
LCR-20	R 1/8 (Hexagon socket head cap taper thread plug)
LCR-25	Seal the R_1 and H_1 ports with the plugs removed from the R_3, H_3 ports.

Prepare two separate plugs shown in the table above for ø8 to 20. Option with plug (refer to page 60) or discrete plug model No. (refer to page 66) are also available.

■ Precautions for piping fittings
Be sure to attach a speed controller during piping before use. The available fittings are as below.

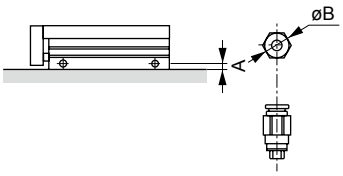

Item / Bore size (mm)	Port size	Port position dimension A	Applicable fitting	Fitting O.D. B
ø6	M3	4	SC3W-M3-4 SC3U-M3-4 SC3W-M3-3.2 SC3U-M3-3.2 GWS3-M3-S GWS4-M3-S	ø8 or less
ø8	M5	5.5	SC3W-M5-4 SC3W-M5-6 GWS4-M5-S GWS4-M5	ø11 or less
ø12		5.5		
ø16		6.5	SC3W-M5-4 SC3W-M5-6 GWS4-M5-S GWS4-M5 GWL4-M5 GWL6-M5 GWS6-M5	ø13 or less
ø20	Rc1/8	8	SC3W-6-4,6,8 GWS4-6 GWS8-6 GWL6-6 GWS6-6 GWL4-6	ø15 or less
ø25		9		

2. Common; when installing

⚠ CAUTION

■ Do not damage the surface flatness by denting or scratching the body (tube) mounting surface or the table surface.
In addition, make sure that the flatness of the mating surface for body and table mounting is 0.02 mm or less.

■ Observe the following bolt insertion lengths and tightening torque when mounting the body.
[Fig. 1]

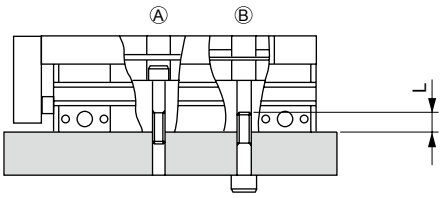

Item	Ⓐ		Ⓑ		
	Bolt used	Tightening torque (N·m)	Bolt used	Tightening torque (N·m)	Max. insertion L (mm)
LCR-6	M3×0.5	0.6 to 1.1	M4×0.7	1.4 to 2.4	6
LCR-8	M3×0.5	0.6 to 1.1	M4×0.7	1.4 to 2.4	6
LCR-12	M4×0.7	1.4 to 2.4	M5×0.8	2.9 to 5.1	8
LCR-16	M5×0.8	2.9 to 5.1	M6×1.0	4.8 to 8.6	9
LCR-20	M5×0.8	2.9 to 5.1	M6×1.0	4.8 to 8.6	9
LCR-25	M6×1.0	4.8 to 8.6	M8×1.25	12.0 to 21.6	12

Mounting, installation and adjustment

■ Observe the following bolt insertion lengths and tightening torque when installing the jig on the slide table or end plate.
[Fig. 2]

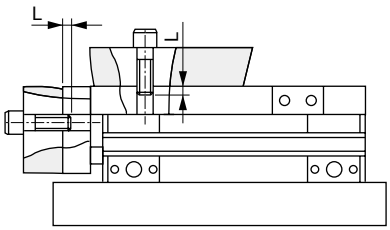

Item	Table		
	Bolt used	Tightening torque (N·m)	Screw insertion L (mm)
LCR-6	M3×0.5	0.6	3
LCR-8	M3×0.5	0.6	3 to 4.5
LCR-12	M4×0.7	1.4	4 to 5.5
LCR-16	M5×0.8	2.9	5 to 6
LCR-20	M5×0.8	2.9	5 to 6
LCR-25	M6×1.0	4.8	6 to 7

Item	End plate		
	Bolt used	Tightening torque (N·m)	Screw insertion L (mm)
LCR-6	M3×0.5	0.6	4.5 to 6
LCR-8	M3×0.5	0.6	4.5 to 7
LCR-12	M4×0.7	1.4	6 to 9
LCR-16	M5×0.8	2.9	7.5 to 9
LCR-20	M5×0.8	2.9	7.5 to 11
LCR-25	M6×1.0	4.8	9 to 11

■ Observe the following tightening torque of bolts and nuts of the stopper.
[Fig. A]

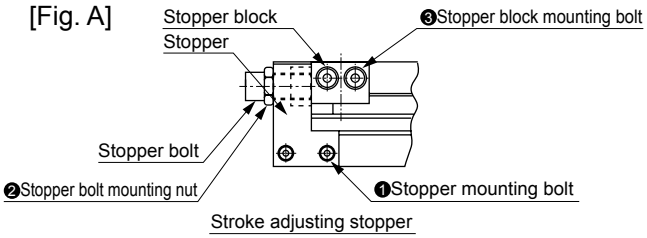

Stroke adjusting stopper

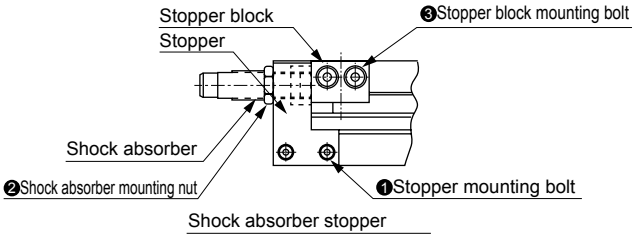

Shock absorber stopper

Model	❶Stopper mounting bolt (N·m)	❷Stopper bolt mounting nut ❷Shock absorber mounting nut (N·m)	❸Stopper block mounting bolt (N·m)
LCR-6	0.4 to 0.5	1.2 to 2.0	0.6 to 0.8
LCR-8	0.4 to 0.5	1.2 to 2.0	0.6 to 0.8
LCR-12	0.6 to 0.8	1.2 to 2.0	0.6 to 0.8
LCR-16	0.6 to 0.8	3.0 to 4.0	1.4 to 1.8
LCR-20	2.9 to 3.5	4.5 to 6.0	1.4 to 1.8
LCR-25	2.9 to 3.5	4.5 to 6.0	2.9 to 3.5

■ The cylinder switch may malfunction if there is a magnetic substance such as a metal plate installed adjacently. To ensure safe operation, keep it 10 mm and over away from the cylinder surface or change the installation surface of the cylinder switch. (Common for all port sizes)

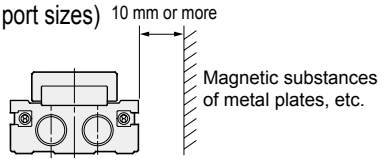

■ The cylinder switches may accidentally function if the cylinders are close to each other. Keep the distance below between the surfaces of the cylinders. (Common for all port sizes)

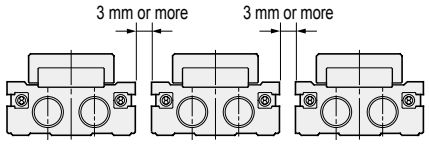

■ CKD's shock absorber is a repair part.
Replace it when the energy absorption performance has degraded or the operation is not smooth.

■ When using a positioning hole, use a pin of dimensions that do not require press fitting. If a pin is press fitted, the load of press fitting may damage or distort the linear guide, lowering the accuracy.
The recommended tolerance of a pin is JIS tolerance m6 or less.

3. Position locking LCR-Q

⚠ CAUTION

■ The locking mechanism works at the stroke end. If the stopper is engaged on the way of the stroke by the external stopper, the locking mechanism may not work and the piston could fall. When setting a load, make sure to check that the lock mechanism functions before installing the product.

■ Supply pressure equal to or higher than the min. working pressure to the port on the lock mechanism side.

■ When the piping at the side where the lock mechanism is provided is long and thin, or when the speed controller is far away from the cylinder port, note that it takes time to engage the lock. Clogging in the silencer mounted on the EXH. port of the solenoid valve may also cause the same result.

Mounting, installation and adjustment

4. Fine speed LCR-F

⚠ CAUTION

■ Perform adjustment such as centering so that a lateral load is not applied to the cylinder.
Adjust and install the sliding guide so that it is not twisted.
- When the load or the resistance fluctuates, operation becomes unstable.
- With a large difference between static friction and kinematic friction of the guide, operation becomes unstable.

5. With buffer LCR-B

■ Depending on the speed and load, the buffer may function when operation is started, resulting in accidental operation of the switch. Adjust to an appropriate speed for the load before use.

■ The type with buffer cannot be used vertically upward.

✖ OK OK

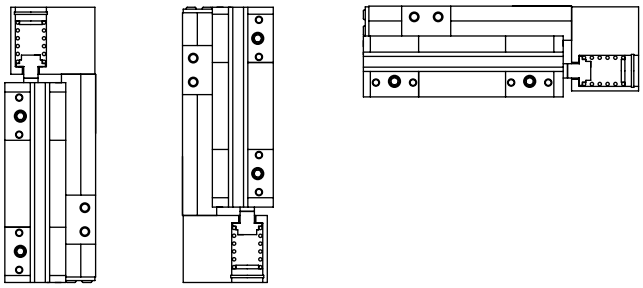

■ Use a buffer of less than the buffer stroke length. Otherwise, malfunctions or damage may result.

Use/maintenance

1. Common

⚠ CAUTION

■ For ø6/8, apply CGL grease (IKO), and for ø12 to 25, apply AFF grease (THK) to the guide rail surface after six months or when the number of operation cycles reaches one million, whichever comes first.

2. Position locking LCR-Q

⚠ WARNING

■ If pressure is supplied to port Ⓐ when both ports are not pressurized and the piston is locked, the lock may not be released or the piston rod may suddenly pop out just after the lock is released. This can be extremely hazardous. To release the lock mechanism, make sure to supply pressure to port Ⓑ. Check that load is not applied to the lock mechanism.

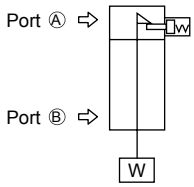

Side where the lock mechanism is not provided.

■ For usage where the drop rate is increased using the quick exhaust valve, the lock may not release normally because the cylinder body starts operating before the lock pin. For the position locking cylinder, do not use the quick exhaust valve.

⚠ CAUTION

■ If back pressure is applied to the locking mechanism, the lock may be released. Use a single solenoid valve, or an individual exhaust manifold.

■ After the locking mechanism is manually operated, make sure to return the locking mechanism to the original state before use. Do not perform manual operation except for adjustment, as it is dangerous.

■ When mounting or adjusting the cylinder, release the lock.
If mounting work, etc., is done while the lock is engaged, the lock part may be damaged.

■ Do not use multiple synchronized cylinders.
Do not arrange so that 1 workpiece is moved by synchronizing 2 or more position locking cylinders. Lock release may fail for one of the cylinders.

■ Use the speed controller with meter-out.
If the meter-in control is used, the lock may not be able to be released.

■ At the side where the lock mechanism is attached, be sure to use the cylinder from the stroke end.
If the cylinder piston does not reach the stroke end, the lock may not be engaged or the lock may not be able to be released.

■ How to unlock
By screwing the hexagon socket head cap screw (M3 x 20) into the stopper piston and pulling the bolt 3 mm with force of 20 N or more, the stopper piston moves and the lock is released. (when horizontally installed with no load and with the rod port pressurized). When the screw is released, the internal spring returns the stopper piston. When the stopper piston fits in the piston rod groove, the cylinder is locked.

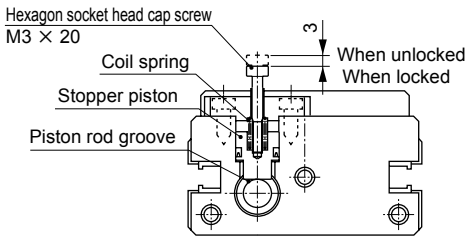

MEMO

LCG

Linear slide cylinder

ø6/ø8/ø12/ø16/ø20/ø25

Overview

A high-precision, high-rigidity wide guide has been attached. Symmetrical structure with increased flexibility in design. Cylinder with linear guide with a wide variety of options and variations.

CONTENTS

Product introduction	136
Series variation	138
● Double acting/single rod (LCG)	140
● Double acting/position locking (LCG-Q)	164
● Double acting/clean-room specifications (LCG-P7*)	172
Selection guide	188
Technical data	193
⚠ Safety precautions	196

Higher precision, higher rigidity, easier to use.

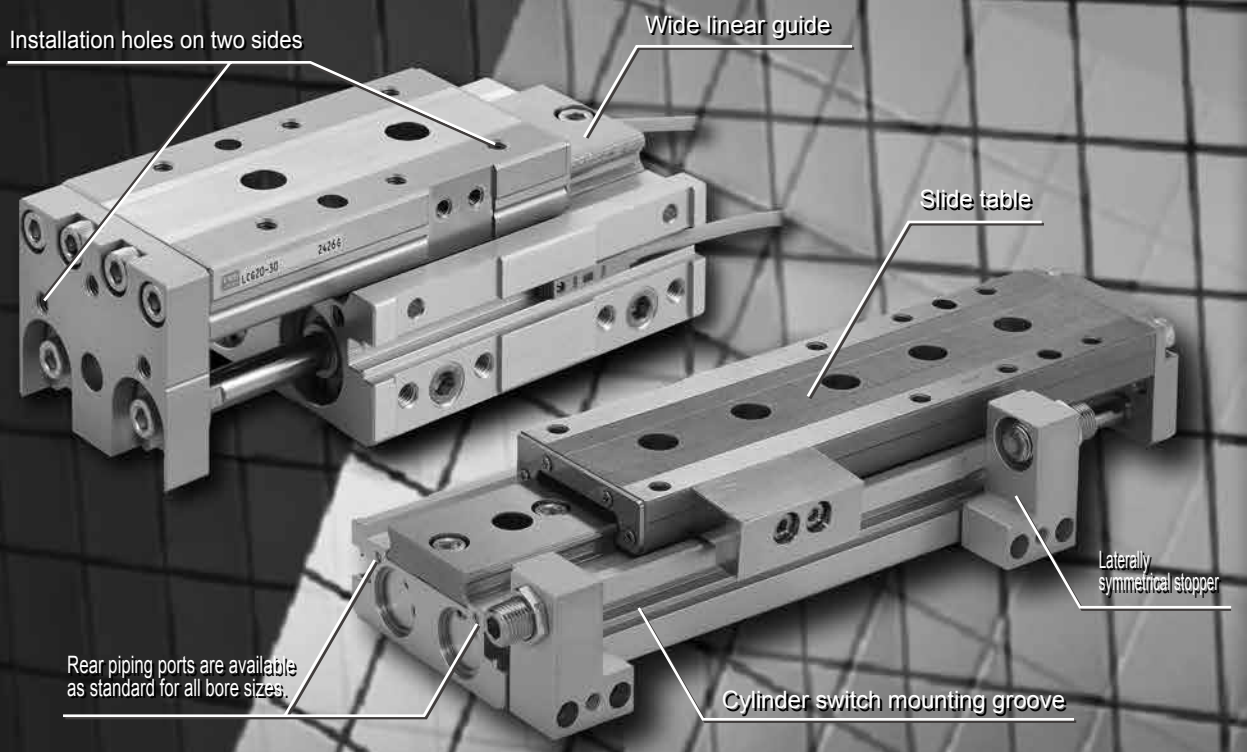

Higher precision

Linear guide table surface is used as the slide table itself. Higher precision than conventional models.
Parallelism of 0.03 mm (ø12 with 30 mm stroke length)
End plate squareness of 0.05 mm

Higher rigidity

A stainless steel or steel slide table has been adopted instead of the conventional aluminum slide table. It increases rigidity when combined with a wide guide.

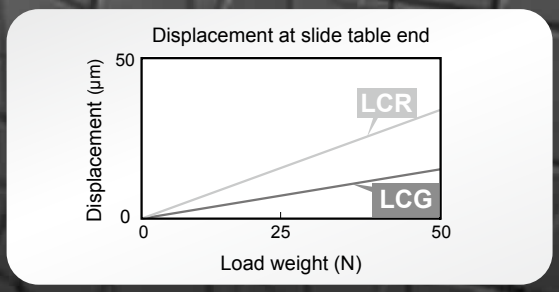

Easy to use, too

No more trouble with designing the cylinder and linear slide system individually. Work hours for designing have been reduced. Designing is more flexible and usability is further enhanced with laterally symmetrical installation of stoppers and multi-side piping.

Applications

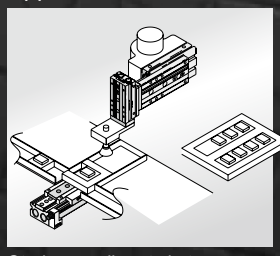

Storing small parts in trays or supply from trays

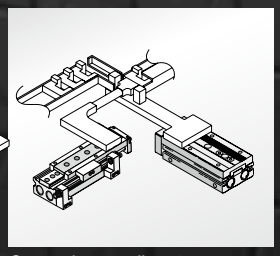

Conveying small parts

LCG Series

Linear slide cylinder

A high-precision rigid wide guide has been attached to the air cylinder.
The linear guide table surface serves as a slide table.
Greater usability with unprecedented precision and rigidity.
Linear slide cylinder LCG Series (ø6/ø8/ø12/ø16/ø20/ø25)

Increased flexibility in design

Designing is more flexible with the laterally symmetrical stoppers, multi-side piping, two-side installation and positioning hole availability.

■ Change to laterally symmetrical configuration is possible.

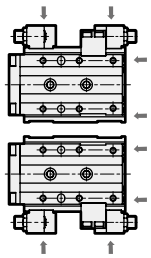

Change to laterally symmetrical configuration is possible
←shows the piping direction.

Guide balls aligned in four rows on the linear guide (ø12 or more)

Guide balls aligned in four rows ensure stable operation in all load directions.
The contact area of the guide balls is smaller than that in the two-row configuration with minimum friction resistance and enables smooth precision operation with a rigid body.

■ Aligned in four rows contacting at two points

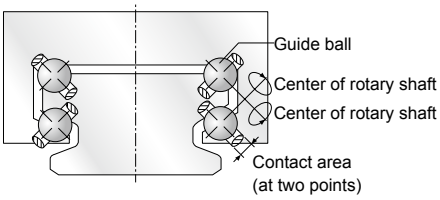

A wide variety of options and variations

Standard, position locking and clean-room specifications are available.
Options include a stroke adjusting stopper, shock absorber stopper and more.
* Shock absorber stopper cannot be used with the clean-room specifications.

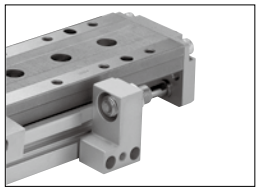

■ Stroke adjusting stopper
(adjusting range on one side: 0 to 5 mm)

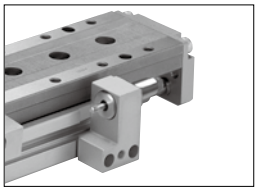

■ Shock absorber stopper reduces the impact at the stroke end.

With buffer mechanism

If the driving section strikes against the workpiece when the cylinder is going forward, the buffer function is activated to protect the workpiece and cylinder. Suitable for use at the end of pick & place devices and other applications requiring a buffer function.
A cylinder switch mounted to detect the buffer activation (BL) enables detection of line abnormalities.

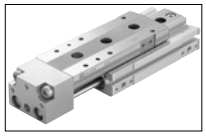

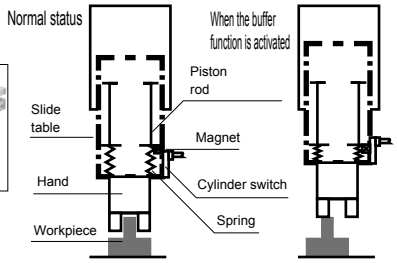

Anti-rust (ø20, 25)

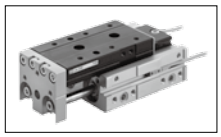

The table and rail surface rustproofing reduces rust in high-humidity environments such as near ionizers.

2-color display switch is available

The proximity 2-color display switch can be mounted.
It does not protrude from the body and thus contributes to the plain and simple appearance of the cylinder.

■ LCG Series variation

Model variations		Bore size	Stroke length (mm) 10	20	30	40	50	75	100	125	150	With buffer B*	Anti-rust treatment U
Double acting/single rod **LCG**	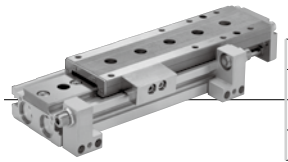	ø6	●	●	●	●	●	●	●	●	●	●	●
		ø8	●	●	●	●	●	●	●	●	●	●	●
		ø12	●	●	●	●	●	●	●	●	●	●	●
		ø16	●	●	●	●	●	●	●	●	●	●	●
		ø20/ø25	●	●	●	●	●	●	●	●	●	●	●
Double acting/position locking **LCG-Q**	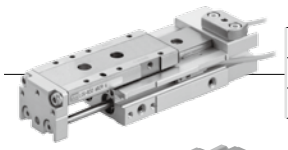	ø8	●	●	●	●	●	●	●	●	●	●	●
		ø12	●	●	●	●	●	●	●	●	●	●	●
		ø16	●	●	●	●	●	●	●	●	●	●	●
		ø20/ø25	●	●	●	●	●	●	●	●	●	●	●
Double acting/single rod (Clean-room specifications) **LCG-P7***		ø6	●	●	●	●	●	●	●	●	●	●	●
		ø8	●	●	●	●	●	●	●	●	●	●	●
		ø12	●	●	●	●	●	●	●	●	●	●	●
		ø16	●	●	●	●	●	●	●	●	●	●	●
		ø20/ø25	●	●	●	●	●	●	●	●	●	●	●

Series variation

Linear slide cylinder LCG Series

Variation	Model No. JIS symbol	Bore size (mm)	Stroke length (mm)								
			10	20	30	40	50	75	100	125	150
Double acting/ single rod	LCG 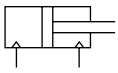	ø6	●	●	●	●	●				
		ø8	●	●	●	●	●	●			
		ø12	●	●	●	●	●	●	●		
		ø16	●	●	●	●	●	●	●	●	
		ø20/ø25	●	●	●	●	●	●	●	●	●
Double acting/ position locking	LCG-Q 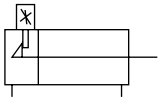	ø8	●	●	●	●	●	●			
		ø12	●	●	●	●	●	●	●		
		ø16	●	●	●	●	●	●	●	●	
		ø20/ø25	●	●	●	●	●	●	●	●	●
Double acting/ single rod clean-room specifications	LCG-P7* 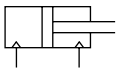	ø6	●	●	●	●	●				
		ø8	●	●	●	●	●	●			
		ø12	●	●	●	●	●	●	●		
		ø16	●	●	●	●	●	●	●	●	
		ø20/ø25	●	●	●	●	●	●	●	●	●

LCM
LCR
LCG
LCW
LCX
STM
STG
STS/STL
STR2
UCA2
ULK*
JSK/M2
JSG
JSC3/JSC4
USSD
UFCD
USC
UB
JSB3
LMB
LML
HCM
HCA
LBC
CAC4
UCAC2
CAC-N
UCAC-N
RCS2
RCC2
PCC
SHC
MCP
GLC
MFC
BBS
RRC
GRC
RV3*
NHS
HRL
LN
Hand
Chuk
MecHnd/Chuk
ShkAbs
FJ
FK
SpdContr
Ending

●: Standard, ◎ : Option, ○: Made to order, : Not available

	Option																Switch	Page
	Stroke adjusting stopper						Shock absorber stopper						With buffer		Anti-rust treated			
	Stopper position ①	Stopper position ②	Stopper position ③	Stopper position ④	Stopper position ①/③	Stopper position ②/④	Stopper position ①	Stopper position ②	Stopper position ③	Stopper position ④	Stopper position ①/③	Stopper position ②/④	Without switch groove	With switch groove	Anti-rust treated product	Plug attached		
	S1	S2	S3	S4	S5	S6	A1	A2	A3	A4	A5	A6	B	BL	U	N		
	◎	◎	◎	◎	◎	◎	◎	◎	◎	◎	◎	◎	◎	◎	◎	◎	◎	140
	◎	◎					◎	◎					◎	◎	◎		◎	164
	◎	◎	◎	◎	◎	◎									◎	◎	◎	172

● Stopper position

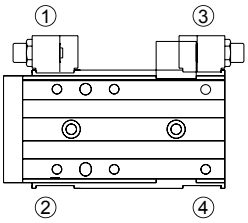

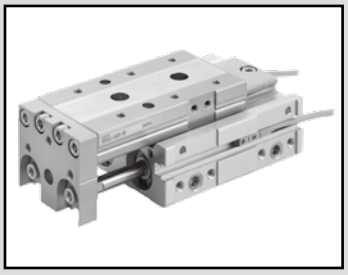

Linear slide cylinder Double acting/single rod

LCG Series

● Bore size: ø6/ø8/ø12/ø16/ø20/ø25

JIS symbol 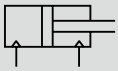

RoHS CAD

Specifications

Item		LCG					
Bore size mm		ø6	ø8	ø12	ø16	ø20	ø25
Actuation		Double acting					
Working fluid		Compressed air					
Max. working pressure MPa		0.7 (≈100 psi, 7 bar)					
Min. working pressure MPa		0.15 (≈22 psi, 1.5 bar) (*1)					
Proof pressure MPa		1.05 (≈150 psi, 10.5 bar)					
Ambient temperature °C		-10 (14°F) to 60 (140°F) (no freezing)					
Port size	Main body side	M3	M5			Rc1/8	
	Main body back	M3				M5	Rc1/8
Stroke tolerance mm		$^{+2.0}_{0}$ (*2)					
Working piston speed mm/s		50 to 500 (*3)					
Cushion		With rubber cushion					
Lubrication		Not required (use turbine oil class 1 ISO VG32 if necessary for lubrication)					
Allowable absorbed energy J		Refer to Table 3 on page 188.					

*1: 0.2 MPa when using ø6 shock absorber stopper.
*2: Note that there will be a slight gap between the end plate and floating bush if no stopper is attached.
*3: Keep within 50 to 200 mm/s when using a stroke adjusting stopper.
*4: The stroke adjusting stopper for 0.3 MPa and over working pressure is the metal sealing.

Stroke length

Bore size (mm)	Standard stroke length (mm)
ø6	10, 20, 30, 40, 50
ø8	10, 20, 30, 40, 50, 75
ø12	10, 20, 30, 40, 50, 75, 100
ø16	10, 20, 30, 40, 50, 75, 100, 125
ø20	10, 20, 30, 40, 50, 75, 100, 125, 150
ø25	10, 20, 30, 40, 50, 75, 100, 125, 150

Note: Products with stroke lengths other than the above are not available.

With buffer specifications

Specifications other than the below are same as the above common specifications.

Item		Description					
Bore size mm		ø6	ø8	ø12	ø16	ø20	ø25
Buffer stroke length mm		4		9		10	
Buffer part spring load	When set N	3	5	10	13	17	21
	When operated N	7	8	14	20	25	29

*1: In the type with buffer, adjusting the rod side stroke length will shorten the buffer stroke length and increase the spring load when set.
*2: Keep the buffer stroke length less than the stroke length above. Otherwise, malfunctions or damage may result.

Theoretical thrust table

Refer to page 189.

LCM
LCR
LCG
LCW
LCX
STM
STG
STS/STL
STR2
UCA2
ULK*
JSK/M2
JSG
JSC3/JSC4
USSD
UFCD
USC
UB
JSB3
LMB
LML
HCM
HCA
LBC
CAC4
UCAC2
CAC-N
UCAC-N
RCS2
RCC2
PCC
SHC
MCP
GLC
MFC
BBS
RRC
GRC
RV3*
NHS
HRL
LN
Hand
Chuk
MecHnd/Chuk
ShkAbs
FJ
FK
SpdContr
Ending

Switch specifications

● 1-color/2-color display

Item	Reed 2-wire				Proximity 2-wire		Proximity 3-wire		
	T0H/T0V		T5H/T5V		T2H/T2V	T2WH/ T2WV	T3H/ T3V	T3PH/ T3PV	T3WH/ T3WV
Applications	For programmable controller, relay		For programmable controller, relay, IC circuit (without indicator lamp), serial connection		Dedicated for programmable controller		For programmable controller, relay		
Output method	-		-		-		NPN output	PNP output	NPN output
Power supply voltage	-		-		-		10 to 28 VDC		
Load voltage	12/24 VDC	110 VAC	5/12/24 VDC	110 VAC	10 to 30 VDC	24 VDC ±10%	30 VDC or less		
Load current	5 to 50 mA	7 to 20 mA	50 mA or less	20 mA or less	5 to 20 mA		100 mA or less		50 mA or less
Indicator lamp	LED (Lit when ON)		Without indicator lamp		LED (Lit when ON)	Red/green LED (Lit when ON)	LED (Lit when ON)	Yellow LED (Lit when ON)	Red/green LED (Lit when ON)
Leakage current	0 mA				1 mA or less		10 μA or less		
Weight g	1 m:18 3 m:49 5 m:80								

Item	Proximity 2-wire	Proximity 3-wire	Proximity 2-wire		Proximity 3-wire		
	F2S	F3S	F2H/F2V	F2YH/ F2YV	F3H/F3V	F3PH/F3PV (Made to order)	F3YH/ F3YV
Applications	Dedicated for programmable controller	For programmable controller, relay	Dedicated for programmable controller		For programmable controller, relay		
Output method	-	NPN output	-		NPN output	PNP output	NPN output
Power supply voltage	-	10 to 28 VDC	-		10 to 28 VDC	4.5 to 28 VDC	10 to 28 VDC
Load voltage	10 to 30 VDC	30 VDC or less	10 to 30 VDC	24 VDC ±10%	30 VDC or less		
Load current	5 to 20 mA	50 mA or less	5 to 20 mA		50 mA or less		
Indicator lamp	LED (Lit when ON)		Yellow LED (Lit when ON)	Red/green LED (Lit when ON)	Yellow LED (Lit when ON)	Yellow LED (Lit when ON)	Red/green LED (Lit when ON)
Leakage current	1 mA or less	10 μA or less	1 mA or less		10 μA or less		
Weight g	1 m:10 3 m:29						

*1 : Refer to Ending Page 1 for detailed switch specifications and dimensions.
*2 : Switches other than the above models, such as switches with connectors, are also available. Refer to Ending Page 1.
*3 : The max. load current is 20 mA at 25°C. The current is lower than 20 mA if the operating ambient temperature around the switch is higher than 25°C. (5 to 10 mA at 60°C)
*4 : The F type switch uses a bend-resistant lead wire.

Cylinder weight

● Basic (Unit: g)

Bore size (mm)	Basic Stroke length (mm)								
	10	20	30	40	50	75	100	125	150
ø6	150	150	170	230	250	-	-	-	-
ø8	220	220	250	330	360	450	-	-	-
ø12	480	480	480	530	580	770	910	-	-
ø16	750	740	730	810	890	1,240	1,430	1,630	-
ø20	1,270	1,260	1,250	1,370	1,490	1,930	2,220	2,510	2,800
ø25	2,120	2,100	2,080	2,260	2,440	3,240	3,660	4,080	4,500

● Additional weight of options (Unit: g)

Bore size (mm)	Option/stopper code				With buffer
	S1 to S4	S5/S6	A1 to A4	A5/A6	B/BL
ø6	30	40	40	50	40
ø8	40	60	50	70	40
ø12	70	100	80	110	70
ø16	110	150	120	160	80
ø20	170	250	180	270	150
ø25	290	380	300	400	320

LCM
LCR
LCG
LCW
LCX
STM
STG
STS/STL
STR2
UCA2
ULK*
JSK/M2
JSG
JSC3/JSC4
USSD
UFCD
USC
UB
JSB3
LMB
LML
HCM
HCA
LBC
CAC4
UCAC2
CAC-N
UCAC-N
RCS2
RCC2
PCC
SHC
MCP
GLC
MFC
BBS
RRC
GRC
RV3*
NHS
HRL
LN
Hand
Chuk
MecHnd/Chuk
ShkAbs
FJ
FK
SpdContr
Ending

How to order (ø6 to ø16)

Without switch (built-in magnet for switch)

LCG - 8 - 40 ——— S5

With switch (built-in magnet for switch)

LCG - 12 - 40 - F2H* - R - A1DT

Model No.

Ⓐ Bore size

Ⓑ Stroke length

Ⓒ Switch model No. *12

Ⓓ Switch quantity

Ⓔ Option

⚠ Precautions for model No. selection

*1 : To change the adjustable stroke length, use the discrete stroke adjusting stopper on page 145.
*2 : For the adjustable stroke range with a shock absorber stopper, refer to the stopper dimensions table on page 162.
*3 : For the port position, refer to the stopper dimensions on page 162.
*4 : The port positions of the standard without stopper are ① and ③ in the figure below.
*5 : Combination of the stroke adjusting stopper and shock absorber stopper is made to order.
*6 : Can be selected for the type with stopper only.
*7 : A switch for buffer should be purchased separately. Refer to how to order a switch on page 144.
*8 : Refer to the selection table below for combinations of options.
*9 : A1**, A2**, A5** and A6** of ø6 to ø8 with 10 mm stroke length or less and ø12/ø16 with 20 mm stroke length or less are made to order since adjustment is not possible with the standard stopper.
*10 : When two switches are necessary for the type with S*** or A***of ø6 to ø8 with 30 mm stroke length or less, select the F □ H type switch.
*11 : The anti-rust is made to order.
*12 : The stroke adjusting stopper for 0.3 MPa and over working pressure is the metal sealing.
*13 : When changing the stopper position from the head side to the rod side, the stopper must be purchased separately according to the stroke length and adjustable stroke length. Refer to "Precautions when purchasing discrete stopper" on page 145.
A1, A2 and adjustable stroke length of 15 mm and 25 mm may not be available depending on the stroke length.

[Example of model No.]

LCG-12-40-F2H-R-A1DT

Model: Linear slide cylinder Double acting/single rod LCG

Ⓐ Bore size : ø12
Ⓑ Stroke length : 40 mm
Ⓒ Switch model No. : Proximity/2-wire Axial lead wire
Ⓓ Switch quantity : 1 on rod side
Ⓔ Other options : Shock absorber Stopper position ① With side and bottom ports Material, steel (nitriding)

● Stopper position

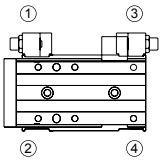

Code	Description
Ⓐ Bore size	
6	ø6
8	ø8
12	ø12
16	ø16

Ⓑ Stroke length (mm)

		Bore size (ø) 6	8	12	16
10	10	●	●	●	●
20	20	●	●	●	●
30	30	●	●	●	●
40	40	●	●	●	●
50	50	●	●	●	●
75	75		●	●	●
100	100			●	●
125	125				●

Ⓒ Switch model No.

Axial lead wire	Radial lead wire	Contact	Voltage AC	Voltage DC	Indicator lamp	Lead Line	Bore size ø6	ø8	ø12	ø16
-	F2S*	Proximity		●	1-color display	2-wire	●	●	●	
-	F3S*			●		3-wire				
F2H*	F2V*			●		2-wire				
F3H*	F3V*			●		3-wire				
F3PH*	F3PV*			●	1 color display (PNP output) (made to order)	3-wire				
F2YH*	F2YV*			●	2-color display	2-wire				
F3YH*	F3YV*			●		3-wire				
T0H*	T0V*	Reed	●	●	1-color display no indicator lamp	2-wire				●
T5H*	T5V*		●	●						
T2H*	T2V*	Proximity		●	1-color display	2-wire				
T3H*	T3V*			●		3-wire				
T3PH*	T3PV*			●	1 color display (PNP output)	3-wire				
T2WH*	T2WV*			●	2-color display	2-wire				
T3WH*	T3WV*			●		3-wire				

*** Lead wire length**

Blank	1 m (standard)		●		
3	3 m (option)		●		
5	5 m (option)				●

Ⓓ Switch quantity

R	1 on rod side
H	1 on head side
D	2

Ⓔ Option

Blank	No option		
S Stroke adjusting stopper			
5 mm stroke adjustment on one side		*1, *5, *8	
S1**	Stopper position ① (can be changed to ④)		Stopper installation position
S2**	Stopper position ② (can be changed to ③)		
S3**	Stopper position ③ (can be changed to ②)	*13	
S4**	Stopper position ④ (can be changed to ①)	*13	
S5**	Stopper position ①, ③		
S6**	Stopper position ②, ④		
A Shock absorber stopper		*2, *5, *8	
A1**	Stopper position ① (can be changed to ④)		Stopper installation position
A2**	Stopper position ② (can be changed to ③)		
A3**	Stopper position ③ (can be changed to ②)	*13	
A4**	Stopper position ④ (can be changed to ①)	*13	
A5**	Stopper position ①, ③		
A6**	Stopper position ②, ④		
**** part**			
Blank	Port on the stopper: without port		
D	Port on stopper: side and bottom ports	*3, *6	
Blank	Stopper block material: steel		
T	Stopper block material: steel (nitriding)	*6	
B With buffer		*7, *8	
B	Without switch groove		
BL	With switch groove		
Plug attached			
Blank	None		
N	With side piping port plug (not available for ø6)		

LCG Double acting/single rod selection table

(Combination with stroke adjusting stopper, shock absorber stopper)

○: Available — : Not available

Model No. code	Option code: Bore size	Option code: Stroke length	Stroke adjusting stopper S1	S2	S3	S4	S5	S6	Shock absorber stopper A1	A2	A3	A4	A5	A6
LCG	ø6, ø8	10	○	○	○	○	○	○	—	—	○	○	—	—
		20 or more	○	○	○	○	○	○	○	○	○	○	○	○
LCG -B, BL	ø12 to ø25	10 to 20	○	○	○	○	○	○	—	—	○	○	—	—
		30 or more	○	○	○	○	○	○	○	○	○	○	○	○

The table above also applies to combinations with option code D (with port on stopper) or T (steel stopper block (nitriding)).

How to order (ø20, ø25)

Without switch (built-in magnet for switch)

LCG - 20 - 40 ———— S5 U

With switch (built-in magnet for switch)

LCG - 20 - 40 - T2H* - R - A1DT U

Model No.

Ⓐ Tube Bore size

Ⓑ Stroke length

Ⓒ Switch model No. *12

Ⓓ Switch quantity

Ⓔ Option

Ⓕ Anti-rust treatment

⚠ Precautions for model No. selection

*1 : To change the adjustable stroke length, use the discrete stroke adjusting stopper on page 145.
*2 : For the adjustable stroke range with a shock absorber stopper, refer to the stopper dimensions table on page 162.
*3 : For the port position, refer to the stopper dimensions on page 162.
*4 : The port positions of the standard without stopper are ① and ③ in the figure below.
*5 : Combination of the stroke adjusting stopper and shock absorber stopper is made to order.
*6 : Can be selected for the type with stopper only.
*7 : A switch for buffer should be purchased separately. Refer to how to order a switch on page 144.
*8 : Refer to the selection table on page 142 for combinations of options.
*9 : A1**, A2**, A5** and A6** with 20 mm stroke length or less are made to order since adjustment is not possible with the standard stopper.
*10 : The table is alloy steel.
To prevent rust, select "U" for an environment where the temperature and humidity is high or condensation may occur on the product surface.
*11 : The stroke adjusting stopper for 0.3 MPa and over working pressure is the metal sealing.
*12 : When changing the stopper position from the head side to the rod side, the stopper must be purchased separately according to the stroke length and adjustable stroke length. Refer to "Precautions when purchasing discrete stopper" on page 145.
A1, A2 and adjustable stroke length of 15 mm and 25 mm may not be available depending on the stroke length.

[Example of model No.]

LCG-20-40-T2H-R-A1DT

Model: Linear slide cylinder Double acting/single rod LCG

Ⓐ Bore size : ø20
Ⓑ Stroke length : 40 mm
Ⓒ Switch model No. : Proximity/2-wire Axial lead wire
Ⓓ Switch quantity : 1 on rod side
Ⓔ Other options : Shock absorber
Stopper position ①
With side and bottom ports
Material, steel (nitriding)

● Stopper position

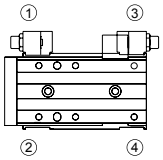

Code	Description
Ⓐ Bore size	
20	ø20
25	ø25
Ⓑ Stroke length (mm)	
10	10
20	20
30	30
40	40
50	50
75	75
100	100
125	125
150	150

Ⓒ Switch model No.

Axial lead wire	Radial lead wire	Contact	Voltage AC	Voltage DC	Indicator lamp	Lead wire
T0H*	T0V*	Reed	●	●	1-color display	2-wire
T5H*	T5V*	Reed	●	●	Without indicator lamp	2-wire
T2H*	T2V*	Proximity		●	1-color display	2-wire
T3H*	T3V*	Proximity		●	1-color display	3-wire
T3PH*	T3PV*	Proximity		●	1-color display (PNP output)	3-wire
T2WH*	T2WV*	Proximity		●	2-color display	2-wire
T3WH*	T3WV*	Proximity		●	2-color display	3-wire

* Lead wire length	
Blank	1 m (standard)
3	3 m (option)
5	5 m (option)

Ⓓ Switch quantity	
R	1 on rod side
H	1 on head side
D	2

Ⓔ Option		
Blank	No option	
S Stroke adjusting stopper		
5 mm stroke adjustment on one side		*1, *5, *8
S1**	Stopper position ① (can be changed to ④)	Stopper installation position
S2**	Stopper position ② (can be changed to ③)	Stopper installation position
S3**	Stopper position ③ (can be changed to ②)	*12
S4**	Stopper position ④ (can be changed to ①)	*12
S5**	Stopper position ①, ③	Stopper installation position
S6**	Stopper position ②, ④	Stopper installation position
A Shock absorber stopper		*2, *5, *8
A1**	Stopper position ① (can be changed to ④)	Stopper installation position
A2**	Stopper position ② (can be changed to ③)	Stopper installation position
A3**	Stopper position ③ (can be changed to ②)	*12
A4**	Stopper position ④ (can be changed to ①)	*12
A5**	Stopper position ①, ③	Stopper installation position
A6**	Stopper position ②, ④	Stopper installation position
**** part**		
Blank	Port on the stopper: without port	
D	Port on stopper: side and bottom ports	*3, *6
Blank	Stopper block material: steel	
T	Stopper block material: steel (nitriding)	*6
B With buffer		*7, *8
B	Without switch groove	
BL	With switch groove	
Plug attached		
Blank	None	
N	With side piping port plug (not available for ø25)	

Ⓕ Anti-rust treatment		
Blank	None	
U	Anti-rust treated product (table/guide)	*10

U: Anti-rust treated product (ø20, ø25)

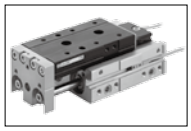

The table and rail surface rustproofing reduces rust in high-humidity environments and near ionizers.

The table and rail are black.

Specifications for rechargeable battery

(Catalog No. CC-1226A)

● Design compatible with rechargeable battery manufacturing process.

LCG - … - P4*

LCM
LCR
LCG
LCW
LCX
STM
STG
STS/STL
STR2
UCA2
ULK*
JSK/M2
JSG
JSC3/JSC4
USSD
UFCD
USC
UB
JSB3
LMB
LML
HCM
HCA
LBC
CAC4
UCAC2
CAC-N
UCAC-N
RCS2
RCC2
PCC
SHC
MCP
GLC
MFC
BBS
RRC
GRC
RV3*
NHS
HRL
LN
Hand
Chuk
MecHnd/Chuk
ShkAbs
FJ
FK
SpdContr
Ending

How to order switch

For ø6 to ø12

SW - F2H

Switch model No.
(Item Ⓒ on page 142)

For ø16 to ø25

SW - T2H3

Switch model No.
(Item Ⓒ on pages 142, 143)

● For buffer

SW - F 2 V 3

Output	
2	DC 2-wire proximity
3	DC 3-wire proximity

Radial lead wire

Lead wire length	
Blank	1 m (standard)
3	3 m (option)

How to order a stopper set

● Set of a stopper and stroke adjusting stopper or shock absorber stopper
● Use it when changing from the standard to the stroke adjusting stopper or shock absorber stopper.

LCG - 12 - S 2 D - S02

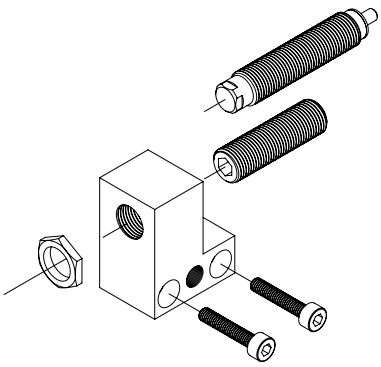

Bore size
(Item Ⓐ on pages 142,143)

Ⓐ Stopper	
S	Stroke adjusting stopper
A	Shock absorber stopper

Ⓑ Stopper installation position *1	
1	Stopper position ① or ④
2	Stopper position ② or ③

Ⓒ Port on the stopper	
Blank	Without port
D	With side and bottom ports

Ⓓ Adjustable stroke length *2/*3	
Blank	Adjustable stroke range 5 mm
S02	Adjustable stroke range 15 mm
S03	Adjustable stroke range 25 mm

*1: When installing in the ① or ② stopper mounting position, the stroke causes changes in the adjustable stroke length; see the table below.
*2: ø6 and ø8 are not available for S03.
*3: Cannot be selected for the shock absorber stopper "A".

Precautions when purchasing the stopper set

When the stopper set is installed in the ① or ② position (refer to pages 142 and 143), add the part shown on the right according to the stroke length and adjustable stroke length.

—: Not applicable

Model No. code	Option code		Discrete stroke adjusting stopper Adjustable stroke length (mm)		
	Bore size	Stroke length	-5	-15	-25
LCG Series	ø6, ø8	10	S02	—	—
		20 or more	N/A	S02	—
	ø12 to ø25	10	S03	—	—
		20	S02	S03	—
		30 or more	N/A	S02	S03

● Stopper set weight (Unit: g)

Stopper port	S1,S2			A1,A2
Port on stopper	Blank, D			
Adjustable stroke length	Blank	S02	S03	Blank
ø6	15	18	—	18
ø8	21	25	—	27
ø12	28	31	34	33
ø16	42	47	52	49
ø20	77	85	92	86
ø25	87	94	101	95

How to order discrete stroke adjusting stopper

- Hexagon socket set screw with urethane
- Use when changing the adjustable stroke range or when using a custom stroke length.

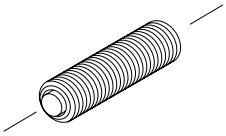

LCG - 12 - S02

Bore size
(Item Ⓐ on pages 142, 143)

Ⓐ Adjustable stroke range	
S01	Single side 5 mm (standard)
S02	Single side 15 mm
S03	Single side 25 mm

Specify S01, S02 or S03 in Ⓐ.
Note: S03 is not available for ø6 and ø8.
Some models may not be available and adjustable stroke range may differ from the above depending on the model No.

Precautions when purchasing discrete stopper

When a discrete stroke adjusting stopper or a discrete shock absorber stopper is installed in the ① or ② position (refer to pages 142 and 143), the combination will be as shown on the right according to the stroke length and adjustable stroke length.

— : Not available

Model No. code	Option code		Discrete stroke adjusting stopper Adjustable stroke length (mm)			Discrete shock absorber stopper
	Bore size	Stroke length	-5	-15	-25	
LCG Series -S1, S2, S5, S6 -A1, A2, A5, A6	ø6, ø8	10	S02	—	—	—
		20 or more	S01	S02	—	A01
	ø12 to ø25	10	S03	—	—	—
		20	S02	S03	—	—
		30 or more	S01	S02	S03	A01

- Discrete stroke adjusting stopper weight (Unit: g)

Adjustable stroke range	S01	S02	S03
ø6	6	9	—
ø8	7	10	—
ø12	7	11	14
ø16	11	16	22
ø20	22	30	37
ø25	23	30	37

How to order discrete shock absorber stopper

- Shock absorber set
- Use when changing from the stroke adjusting stopper or shock absorber stopper.

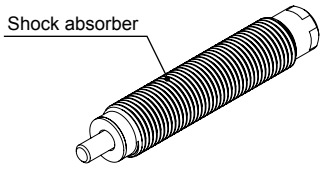

LCG - 12 - A01

Bore size
(Item Ⓐ on pages 142, 143)

Note: Some models may not be available depending on the specifications. Refer to pages 142 and 143.
For the adjustable stroke range with a shock absorber stopper, refer to page 162.

Applicable shock absorber model No.

Model	Shock absorber model No.	Weight (g)
LCG-6	SKL-0804	9
LCG-8	SKL-0805	12
LCG-12	SKL-0805	12
LCG-16	SKL-1006	19
LCG-20	SKL-1208	31
LCG-25	SKL-1208	31

How to order discrete stopper block

- Use it when changing from the standard to the stroke adjusting stopper or shock absorber stopper.

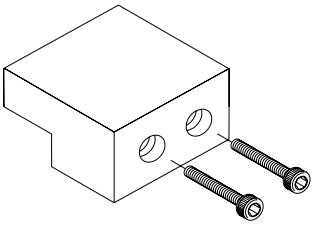

LCG - 12 - SB1 T

Bore size
(Item Ⓐ on pages 142, 143)

Ⓐ Stopper block	
SB1	ø6/ø8: For 30 mm stroke length or less
	ø12 to ø25: For 50 mm stroke length or less
SB2	ø6/ø8: For 40 mm stroke length or more
	ø12 to ø25: For 75 mm stroke length or more

Ⓑ Material	
Blank	Stopper block material: steel
T	Stopper block material: steel (nitriding)

- Discrete stroke adjusting stopper weight (Unit: g)

Adjustable stroke range	SB1(T)	SB2(T)
ø6	11	21
ø8	14	24
ø12	23	37
ø16	38	72
ø20	60	99
ø25	112	206

LCM
LCR
LCG
LCW
LCX
STM
STG
STS/STL
STR2
UCA2
ULK*
JSK/M2
JSG
JSC3/JSC4
USSD
UFCD
USC
UB
JSB3
LMB
LML
HCM
HCA
LBC
CAC4
UCAC2
CAC-N
UCAC-N
RCS2
RCC2
PCC
SHC
MCP
GLC
MFC
BBS
RRC
GRC
RV3*
NHS
HRL
LN
Hand
Chuk
MecHnd/Chuk
ShkAbs
FJ
FK
SpdContr
Ending

Internal structure and parts list

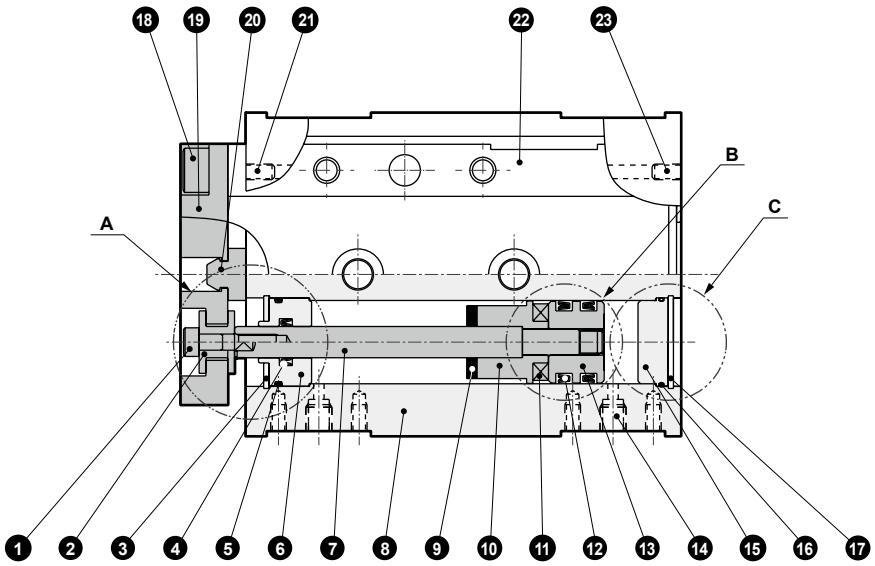

For A part ø6

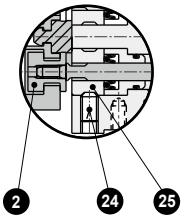

For A part ø8

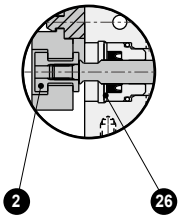

For B part ø6, ø8, ø12

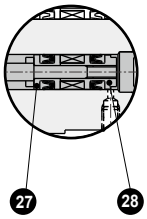

For C part ø6, ø8

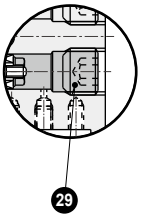

Parts list

No.	Part name	Material	Remarks
1	Hexagon socket head cap screw	Alloy steel	Zinc chromate
2	Floating bush	Stainless steel	
3	C type snap ring	ø8: Steel ø12 to 25: Stainless steel	ø8 to 25 only
4	Rod packing	Nitrile rubber	
5	Metal gasket	Nitrile rubber	
6	Rod metal	Aluminum alloy	Alumite
7	Piston rod	Stainless steel	
8	Cylinder body	Aluminum alloy	Hard alumite
9	Cushion rubber (R)	Urethane rubber	
10	Magnet spacer	Aluminum alloy	Chromate
11	Magnet	Plastic	
12	Piston packing	Nitrile rubber	
13	Piston	Aluminum alloy	Chromate
14	Plug	Stainless steel	ø6 to 16
		Steel	ø20, 25

No.	Part name	Material	Remarks
15	Cover	Aluminum alloy	Chromate
16	Cover gasket	Nitrile rubber	
17	C type snap ring	ø8: Steel ø12 to 25: Stainless steel	ø8 to 25 only
18	Hexagon socket head cap screw	Alloy steel	Zinc chromate
19	End plate	Aluminum alloy	Alumite
20	Cushion rubber (H)	Urethane rubber	
21	Plug	Stainless steel	
22	Table	ø6 to 16: Stainless steel ø20, 25: Steel	
23	Hexagon socket set screw	Stainless steel	
24	Hexagon socket set screw	Stainless steel	ø6 only
25	Rod metal A	Aluminum alloy	
26	Cap	Aluminum alloy	Chromate
27	Piston A	Aluminum alloy	Chromate
28	Piston B	Aluminum alloy	Chromate
29	Hexagon socket set screw	Alloy steel	Zinc chromate

Repair parts list

Bore size (mm)	Kit No.	Repair parts No.
ø6	LCG-6K	4 5 9 12 16 20
ø8	LCG-8K	
ø12	LCG-12K	
ø16	LCG-16K	
ø20	LCG-20K	
ø25	LCG-25K	

Internal structure and parts list

Structure with stopper

● Type with port on stopper side and bottom (code D)

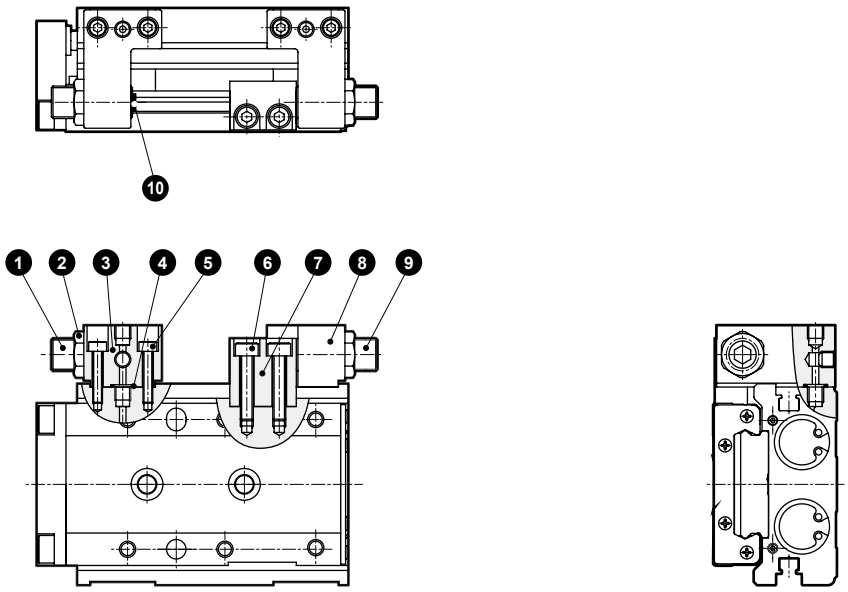

● Without port on the stopper

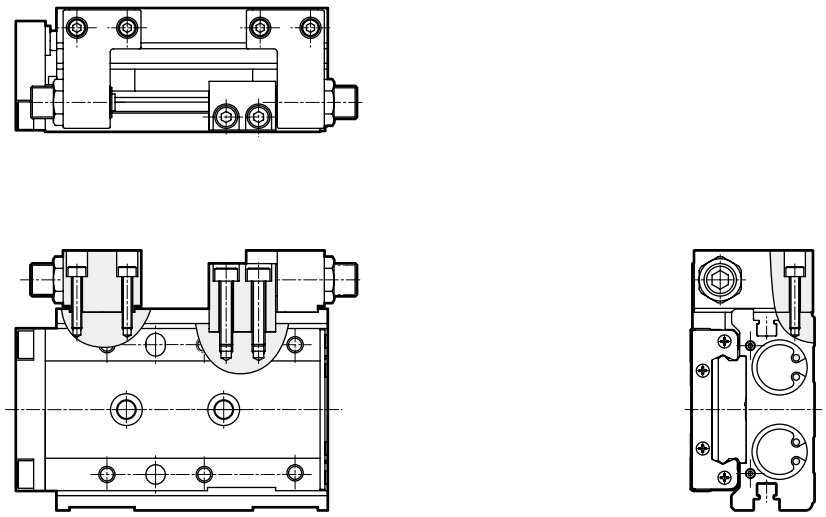

Parts list

No.	Part name	Material	Remarks
1	Stopper bolt	Alloy steel	Nickeling
2	Hexagon nut	Alloy steel	Nickeling
3	Stopper A	Aluminum alloy	Alumite
4	Gasket	Urethane rubber	
5	Hexagon socket head cap screw	Alloy steel	Zinc chromate
6	Hexagon socket head cap screw	Alloy steel	Zinc chromate

No.	Part name	Material	Remarks
7	Stopper block (Stopper block code: Blank)	Steel	Nickeling
	Stopper block (Stopper block code: T)	Steel	Nitriding
8	Stopper B	Aluminum alloy	Alumite
9	Stopper bolt	Alloy steel	Nickeling
10	Cushion rubber	Urethane rubber	

Internal structure and parts list

LCG-*-*-B*

● With buffer, without switch groove

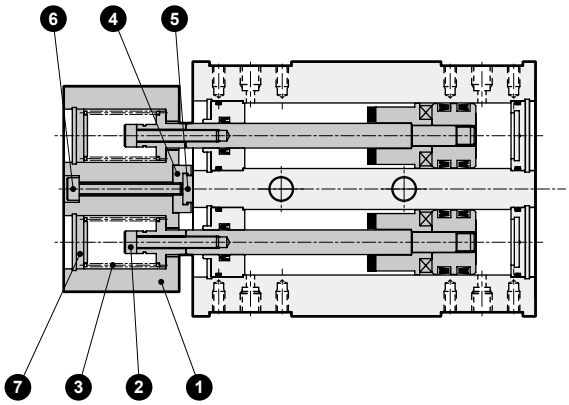

● With buffer, with switch groove

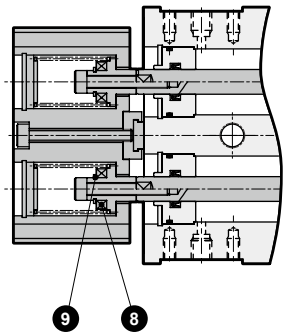

Parts list

No.	Part name	Material	Remarks	No.	Part name	Material	Remarks
1	End plate	Aluminum alloy	Alumite	6	C type snap ring	ø6, 8: Steel ø12 to 25: Stainless steel	
2	Hexagon socket head cap screw	Alloy steel	Zinc chromate				
3	Coil spring	Steel		7	Cover	Aluminum alloy	Chromate
4	Stopper	ø6: Stainless steel ø8 to 25: Aluminum alloy		8	Magnet	Plastic	
5	Cushion rubber	Urethane rubber		9	E-ring	ø6 to 12: Stainless steel ø16 to 25: Steel	

MEMO

LCM
LCR
LCG
LCW
LCX
STM
STG
STS/STL
STR2
UCA2
ULK*
JSK/M2
JSG
JSC3/JSC4
USSD
UFCD
USC
UB
JSB3
LMB
LML
HCM
HCA
LBC
CAC4
UCAC2
CAC-N
UCAC-N
RCS2
RCC2
PCC
SHC
MCP
GLC
MFC
BBS
RRC
GRC
RV3*
NHS
HRL
LN
Hand
Chuk
MecHnd/Chuk
ShkAbs
FJ
FK
SpdContr
Ending

Dimensions (bore size: ø6)

● LCG-6

Stroke length: 10, 20, 30
(Body mounting hole in the figure shows 20 mm stroke length)

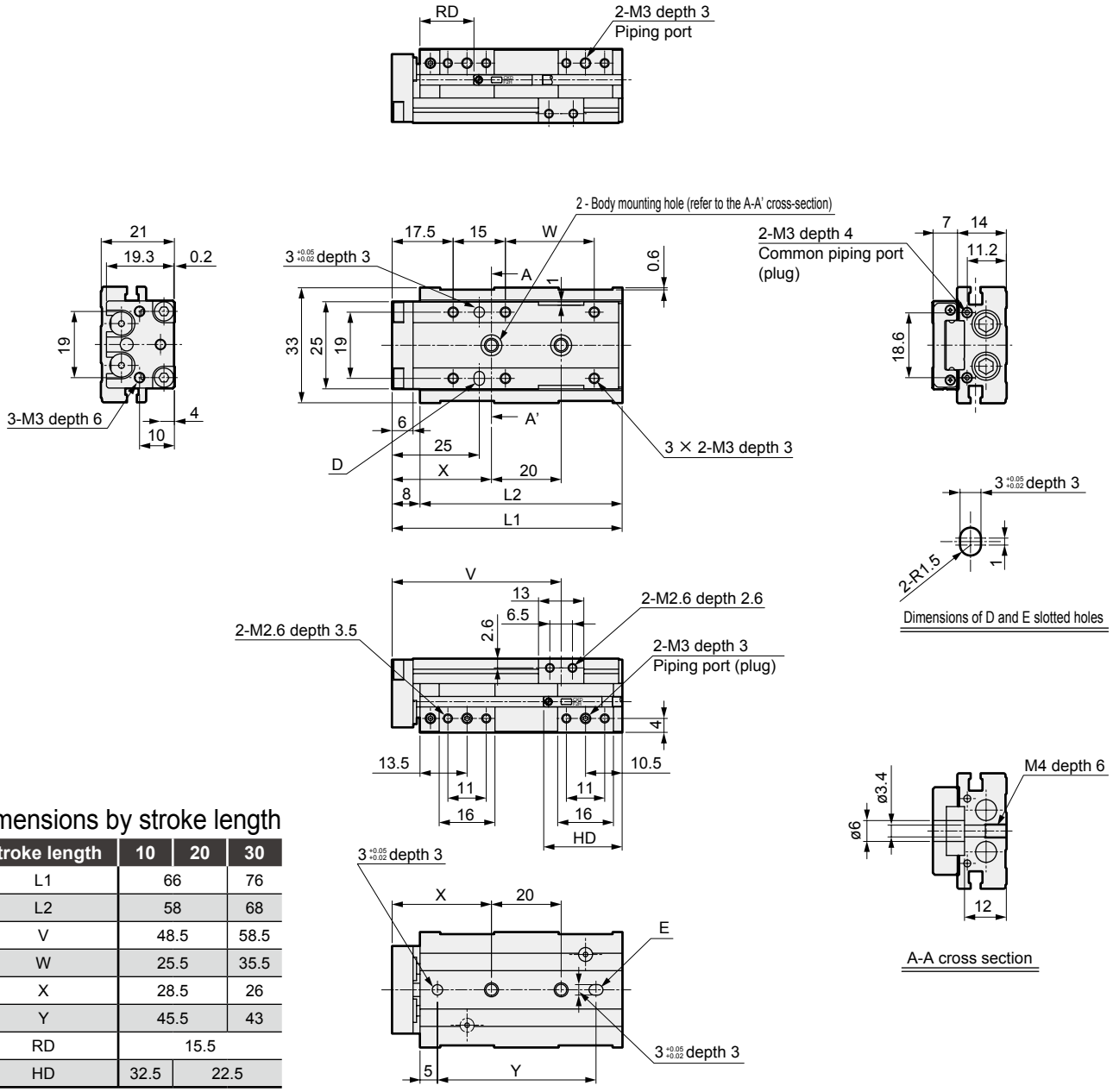

Dimensions by stroke length

Stroke length	10	20	30
L1	66		76
L2	58		68
V	48.5		58.5
W	25.5		35.5
X	28.5		26
Y	45.5		43
RD	15.5		
HD	32.5	22.5	

● Dimensions of protruding section when the F2S or F3S cylinder switch is mounted

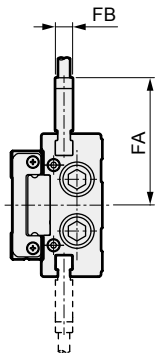

Stroke length	10	20	30
FA	29.6		
FB	4		
RD	14.5		
HD	33.5	23.5	

*1 : When using a positioning hole, use a pin of dimensions that do not require press fitting.
The recommended tolerance of a pin is JIS tolerance m6 or less.

*2 : When using rear piping, refer to the cautions of 1. Common; when piping on page 196.

Dimensions (bore size: ø6)

CAD

● LCG-6

Stroke length: 40, 50
(Body mounting hole in the figure shows 50 mm stroke length)

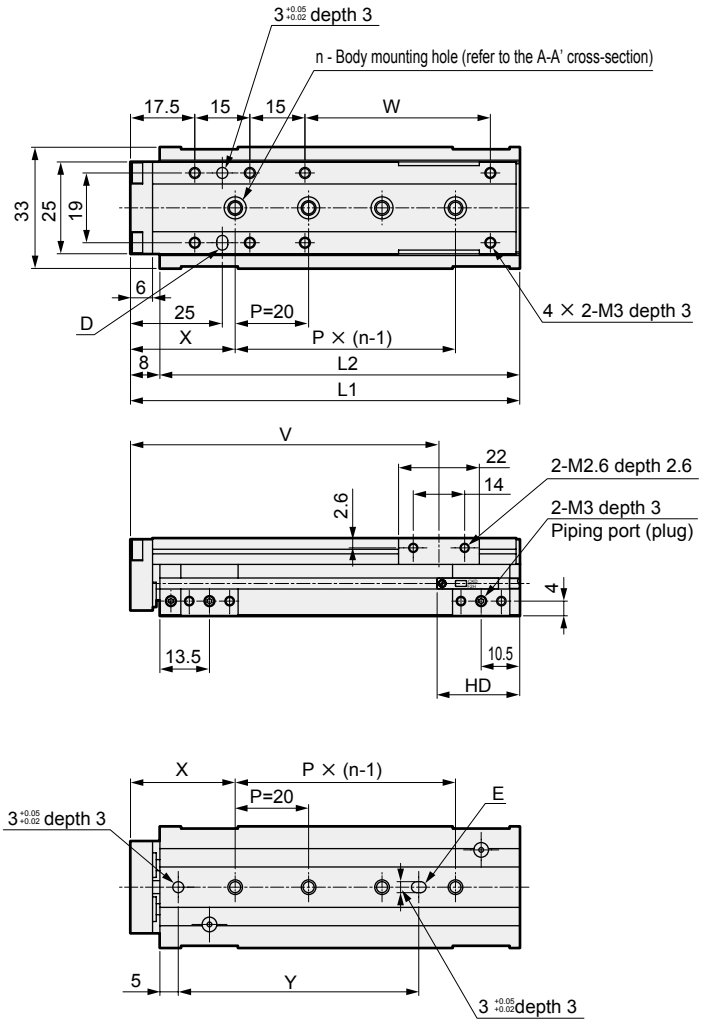

Dimensions by stroke length

Stroke length	40	50
L1	96	106
L2	88	98
n	3	4
V	74	84
W	40.5	50.5
X	27	28.5
Y	44	65.5
RD	25.5	
HD	22.5	

● Dimensions of protruding section when the F2S or F3S cylinder switch is mounted

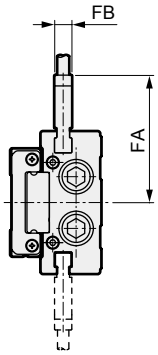

Stroke length	40	50
FA	29.6	
FB	4	
RD	24.5	
HD	23.5	

*1 : When using a positioning hole, use a pin of dimensions that do not require press fitting.
The recommended tolerance of a pin is JIS tolerance m6 or less.

*2 : When using rear piping, refer to the cautions of 1. Common; when piping on page 196.

LCM
LCR
LCG
LCW
LCX
STM
STG
STS/STL
STR2
UCA2
ULK*
JSK/M2
JSG
JSC3/JSC4
USSD
UFCD
USC
UB
JSB3
LMB
LML
HCM
HCA
LBC
CAC4
UCAC2
CAC-N
UCAC-N
RCS2
RCC2
PCC
SHC
MCP
GLC
MFC
BBS
RRC
GRC
RV3*
NHS
HRL
LN
Hand
Chuk
MecHnd/Chuk
ShkAbs
FJ
FK
SpdContr
Ending

Dimensions (bore size: ø8)

● LCG-8

Stroke length: 10, 20, 30
(Body mounting hole in the figure shows 30 mm stroke length)

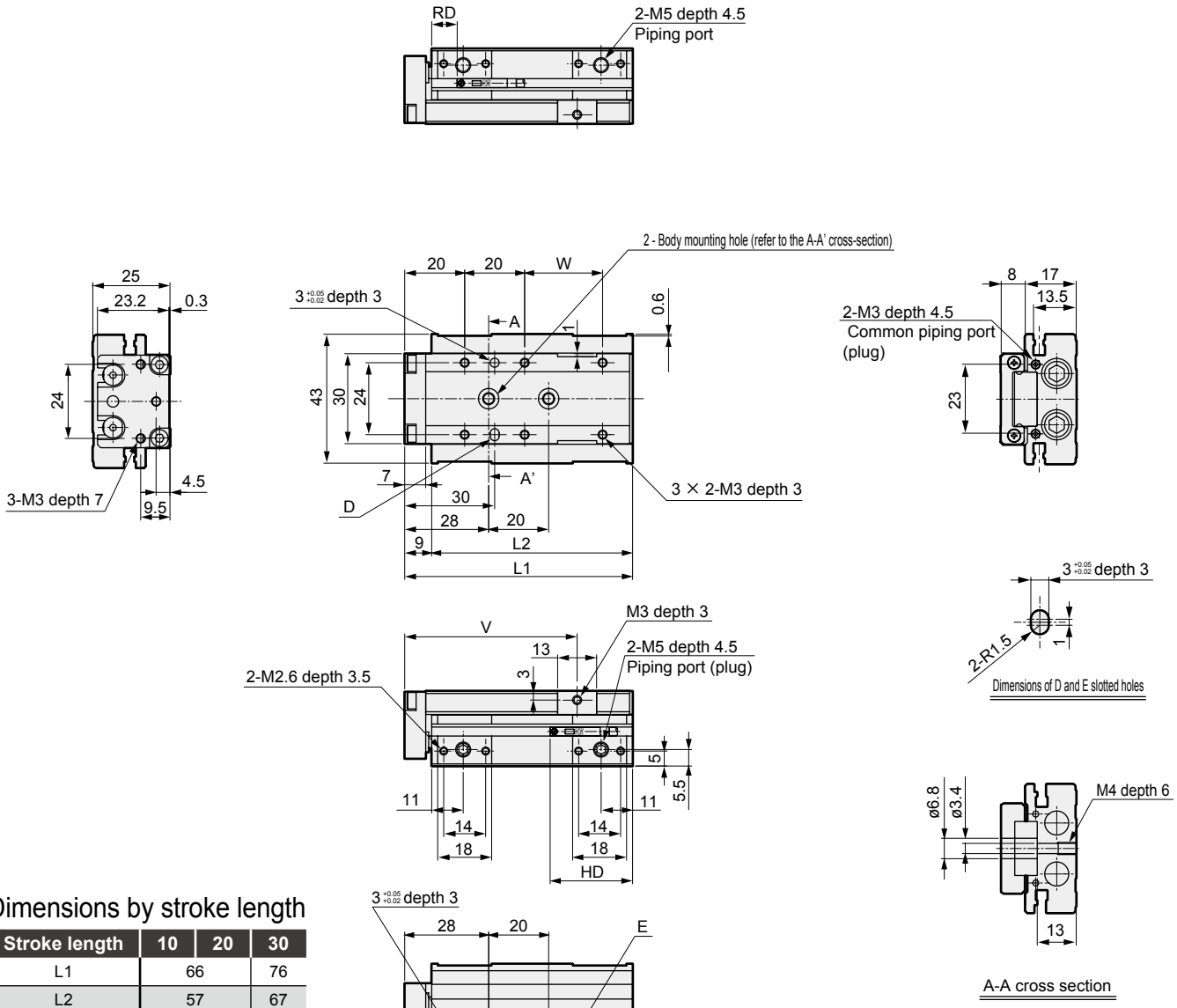

Dimensions by stroke length

Stroke length	10	20	30
L1	66		76
L2	57		67
V	47.5		57.5
W	16		26
RD	13		
HD	34	24	

● Dimensions of protruding section when the F2S or F3S cylinder switch is mounted

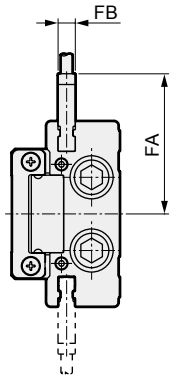

Stroke length	10	20	30
FA	32.6		
FB	4		
RD	12		
HD	35	25	

*1 : When using a positioning hole, use a pin of dimensions that do not require press fitting.
The recommended tolerance of a pin is JIS tolerance m6 or less.

*2 : When using rear piping, refer to the cautions of 1. Common; when piping on page 196.

LCM
LCR
LCG
LCW
LCX
STM
STG
STS/STL
STR2
UCA2
ULK*
JSK/M2
JSG
JSC3/JSC4
USSD
UFCD
USC
UB
JSB3
LMB
LML
HCM
HCA
LBC
CAC4
UCAC2
CAC-N
UCAC-N
RCS2
RCC2
PCC
SHC
MCP
GLC
MFC
BBS
RRC
GRC
RV3*
NHS
HRL
LN
Hand
Chuk
MecHnd/Chuk
ShkAbs
FJ
FK
SpdContr
Ending

Dimensions (bore size: ø8)

CAD

● LCG-8

Stroke length: 40, 50, 75
(Body mounting hole in the figure shows 50 mm stroke length)

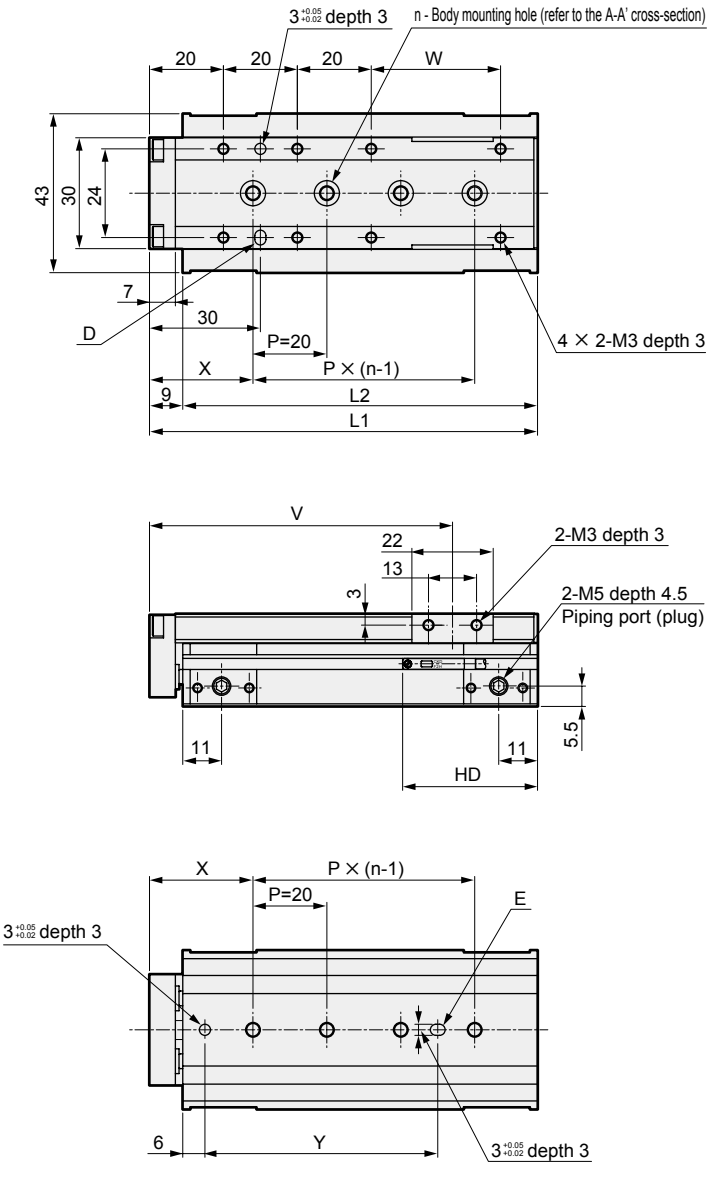

Dimensions by stroke length

Stroke length	40	50	75
L1	95	105	130
L2	86	96	121
n	3	4	5
V	72	82	107
W	25	35	60
X	26.5	28	25
Y	41.5	63	80
RD	13		
HD	33		

● Dimensions of protruding section when the F2S or F3S cylinder switch is mounted

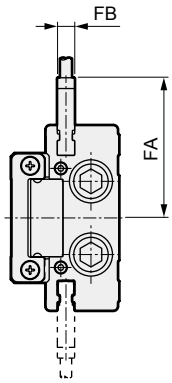

Stroke length	40	50	75
FA	32.6		
FB	4		
RD	12		
HD	34		

*1 : When using a positioning hole, use a pin of dimensions that do not require press fitting.
The recommended tolerance of a pin is JIS tolerance m6 or less.

*2 : When using rear piping, refer to the cautions of 1. Common; when piping on page 196.

Dimensions (bore size: ø12)

● LCG-12

Stroke: 10, 20, 30, 40, 50
(Body mounting hole in the figure shows 30 mm stroke length)

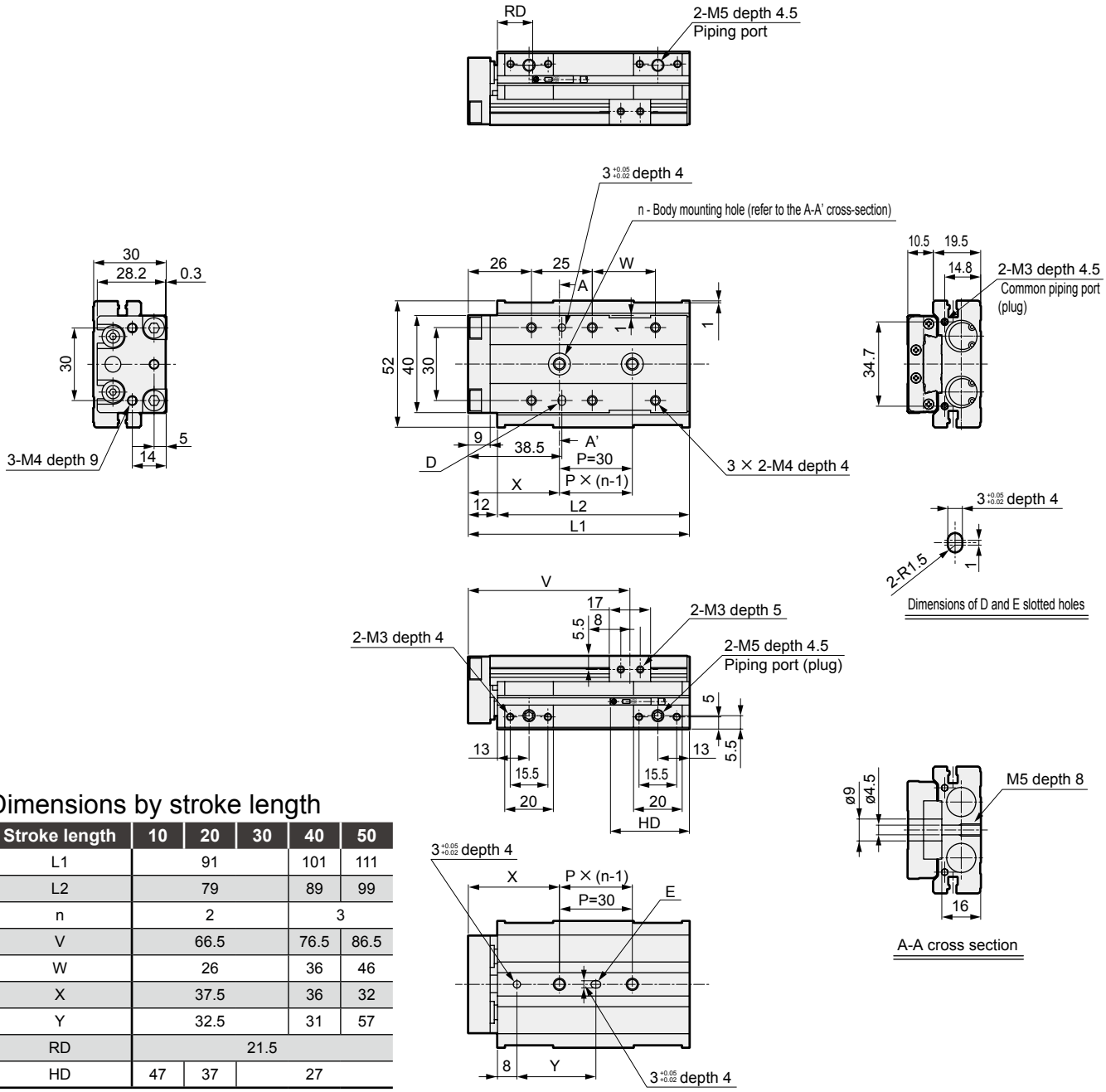

Dimensions by stroke length

Stroke length	10	20	30	40	50
L1	91			101	111
L2	79			89	99
n	2			3	
V	66.5			76.5	86.5
W	26			36	46
X	37.5			36	32
Y	32.5			31	57
RD	21.5				
HD	47	37	27		

● Dimensions of protruding section when the F2S or F3S cylinder switch is mounted

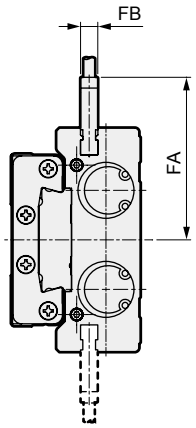

Stroke length	10	20	30	40	50
FA	37.8				
FB	4				
RD	20.5				
HD	48	38	28		

*1 : When using a positioning hole, use a pin of dimensions that do not require press fitting.
The recommended tolerance of a pin is JIS tolerance m6 or less.

*2 : When using rear piping, refer to the cautions of 1. Common; when piping on page 196.

LCM
LCR
LCG
LCW
LCX
STM
STG
STS/STL
STR2
UCA2
ULK*
JSK/M2
JSG
JSC3/JSC4
USSD
UFCD
USC
UB
JSB3
LMB
LML
HCM
HCA
LBC
CAC4
UCAC2
CAC-N
UCAC-N
RCS2
RCC2
PCC
SHC
MCP
GLC
MFC
BBS
RRC
GRC
RV3*
NHS
HRL
LN
Hand
Chuk
MecHnd/Chuk
ShkAbs
FJ
FK
SpdContr
Ending

Dimensions (bore size: ø12)

● LCG-12

Stroke length: 75, 100
(Body mounting hole in the figure shows 100 mm stroke length)

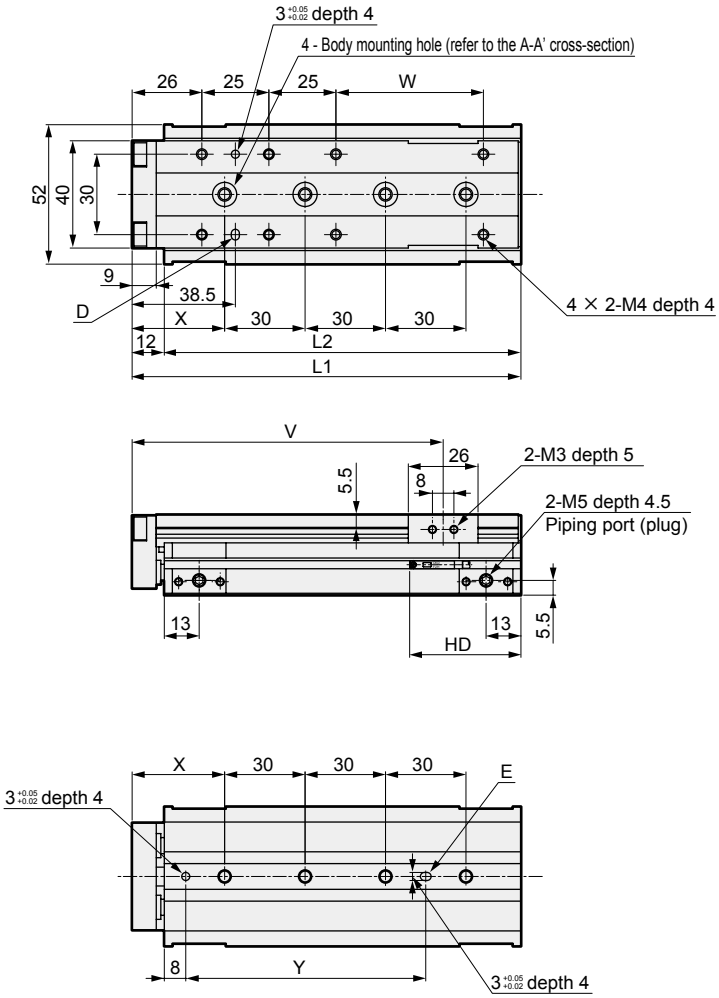

Dimensions by stroke length

Stroke length	75	100
L1	145	170
L2	133	158
V	116	141
W	55	80
X	34.5	47
Y	89.5	102
RD	21.5	
HD	36	

● Dimensions of protruding section when the F2S or F3S cylinder switch is mounted

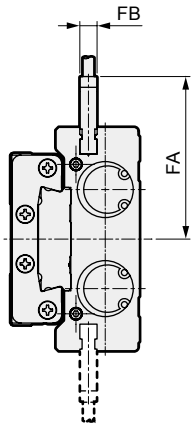

Stroke length	75	100
FA	37.8	
FB	4	
RD	20.5	
HD	37	

*1: When using a positioning hole, use a pin of dimensions that do not require press fitting.
The recommended tolerance of a pin is JIS tolerance m6 or less.

*2 : When using rear piping, refer to the cautions of 1. Common; when piping on page 196.

LCM
LCR
LCG
LCW
LCX
STM
STG
STS/STL
STR2
UCA2
ULK*
JSK/M2
JSG
JSC3/JSC4
USSD
UFCD
USC
UB
JSB3
LMB
LML
HCM
HCA
LBC
CAC4
UCAC2
CAC-N
UCAC-N
RCS2
RCC2
PCC
SHC
MCP
GLC
MFC
BBS
RRC
GRC
RV3*
NHS
HRL
LN
Hand
Chuk
MecHnd/Chuk
ShkAbs
FJ
FK
SpdContr
Ending

Dimensions (bore size: ø16)

● LCG-16

Stroke: 10, 20, 30, 40, 50
(Body mounting hole in the figure shows 30 mm stroke length)

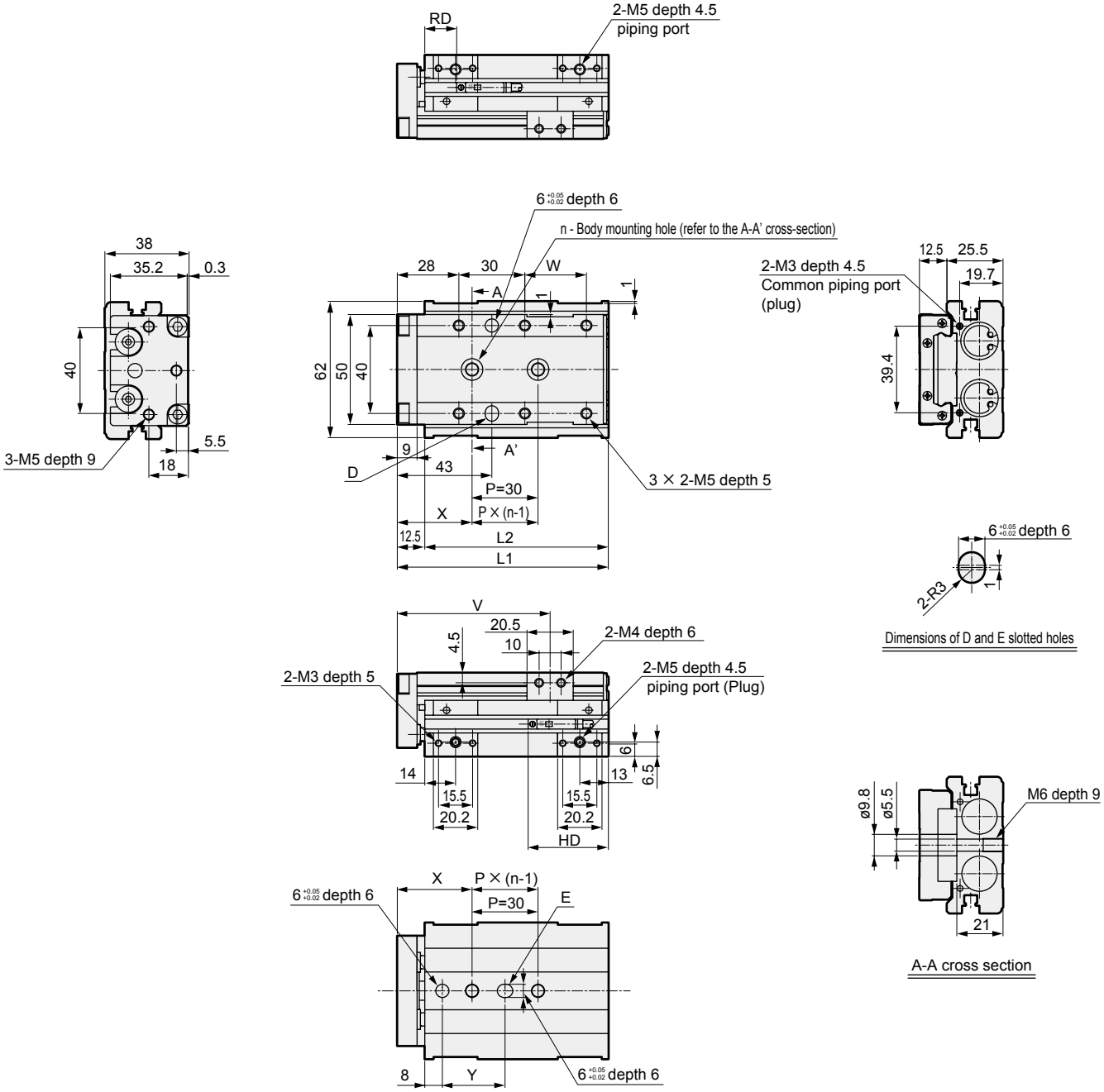

Dimensions by stroke length

Stroke length		10	20	30	40	50
L1		96			106	116
L2		83.5			93.5	103.5
n		2				3
V		69.8			79.8	89.8
W		28			38	48
X		34			45.5	35.5
Y		28.5			40	60
T0/5*	RD	17				
T2/3*	HD	56.5	46.5	36.5		
T2/3W*	RD	19.5				
	HD	54	44	34		

*1 : When using a positioning hole, use a pin of dimensions that do not require press fitting.
The recommended tolerance of a pin is JIS tolerance m6 or less.

*2 : When using rear piping, refer to the cautions of 1. Common; when piping on page 196.

LCM
LCR
LCG
LCW
LCX
STM
STG
STS/STL
STR2
UCA2
ULK*
JSK/M2
JSG
JSC3/JSC4
USSD
UFCD
USC
UB
JSB3
LMB
LML
HCM
HCA
LBC
CAC4
UCAC2
CAC-N
UCAC-N
RCS2
RCC2
PCC
SHC
MCP
GLC
MFC
BBS
RRC
GRC
RV3*
NHS
HRL
LN
Hand
Chuk
MecHnd/Chuk
ShkAbs
FJ
FK
SpdContr
Ending

Dimensions (bore size: ø16)

● LCG-16

Stroke length: 75, 100, 125
(Body mounting hole in the figure shows 75 mm stroke length)

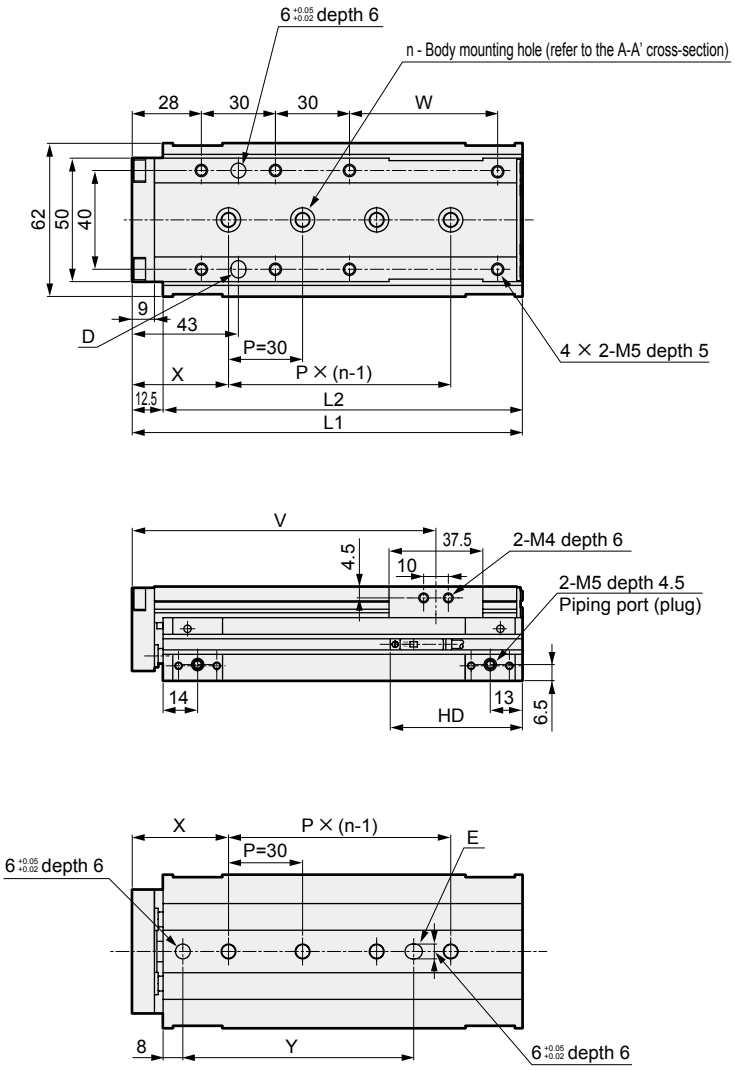

Dimensions by stroke length

Stroke length		75	100	125
L1		158	183	208
L2		145.5	170.5	195.5
n		4	5	
V		123.3	148.3	173.3
W		60	85	110
X		39	37	49
Y		93.5	121.5	133.5
T0/5*	RD	17		
T2/3*	HD	53.5		
T2/3W*	RD	19.5		
	HD	51		

*1 : When using a positioning hole, use a pin of dimensions that do not require press fitting.
The recommended tolerance of a pin is JIS tolerance m6 or less.

*2 : When using rear piping, refer to the cautions of 1. Common; when piping on page 196.

Dimensions (bore size: ø20)

● LCG-20

Stroke: 10, 20, 30, 40, 50
(Body mounting hole in the figure shows 30 mm stroke length)

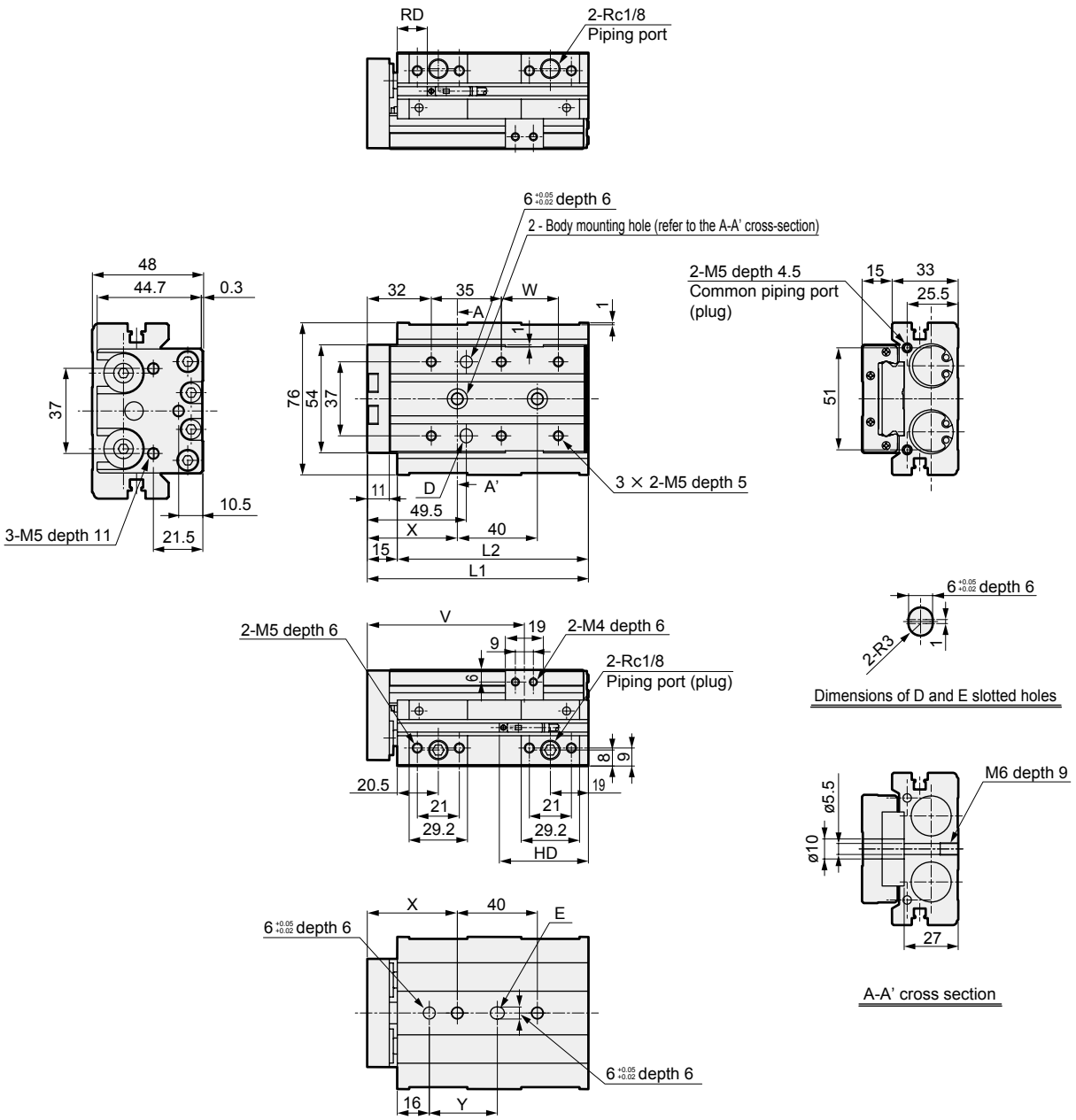

Dimensions by stroke length

Stroke length		10	20	30	40	50
L1		110.5			120.5	130.5
L2		95.5			105.5	115.5
V		78.5			88.5	98.5
W		28.5			38.5	48.5
X		45			51	49
Y		34			40	38
T0/5*	RD	16				
T2/3*	HD	69.5	59.5	49.5		
T2/3W*	RD	18.5				
	HD	67	57	47		

* The same dimensions apply to the anti-rust (U).

*1 : When using a positioning hole, use a pin of dimensions that do not require press fitting.
The recommended tolerance of a pin is JIS tolerance m6 or less.

*2 : When using rear piping, refer to the cautions of 1. Common; when piping on page 196.

LCM
LCR
LCG
LCW
LCX
STM
STG
STS/STL
STR2
UCA2
ULK*
JSK/M2
JSG
JSC3/JSC4
USSD
UFCD
USC
UB
JSB3
LMB
LML
HCM
HCA
LBC
CAC4
UCAC2
CAC-N
UCAC-N
RCS2
RCC2
PCC
SHC
MCP
GLC
MFC
BBS
RRC
GRC
RV3*
NHS
HRL
LN
Hand
Chuk
MecHnd/Chuk
ShkAbs
FJ
FK
SpdContr
Ending

Dimensions (bore size: ø20)

CAD

● LCG-20

Stroke length: 75, 100, 125, 150
(Body mounting hole in the figure shows 100 mm stroke length)

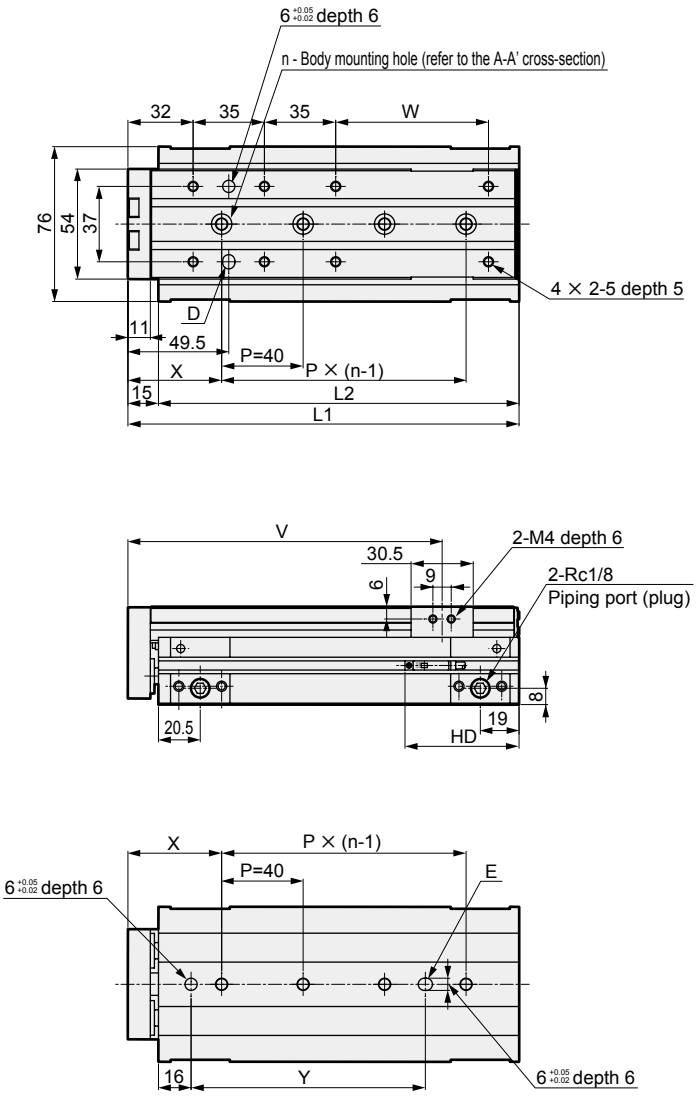

Dimensions by stroke length

Stroke length		75	100	125	150
L1		167	192	217	242
L2		152	177	202	227
n		3	4		5
V		129.3	154.3	179.3	204.3
W		50	75	100	125
X		46		53	51
Y		75	115	122	160
T0/5*	RD	16			
T2/3*	HD	61			
T2/3W*	RD	18.5			
	HD	58.5			

* The same dimensions apply to the anti-rust (U).

*1 : When using a positioning hole, use a pin of dimensions that do not require press fitting.
The recommended tolerance of a pin is JIS tolerance m6 or less.

*2 : When using rear piping, refer to the cautions of 1. Common; when piping on page 196.

LCM
LCR
LCG
LCW
LCX
STM
STG
STS/STL
STR2
UCA2
ULK*
JSK/M2
JSG
JSC3/JSC4
USSD
UFCD
USC
UB
JSB3
LMB
LML
HCM
HCA
LBC
CAC4
UCAC2
CAC-N
UCAC-N
RCS2
RCC2
PCC
SHC
MCP
GLC
MFC
BBS
RRC
GRC
RV3*
NHS
HRL
LN
Hand
Chuk
MecHnd/Chuk
ShkAbs
FJ
FK
SpdContr
Ending

Dimensions (bore size: ø25)

● LCG-25

Stroke: 10, 20, 30, 40, 50
(Body mounting hole in the figure shows 30 mm stroke length)

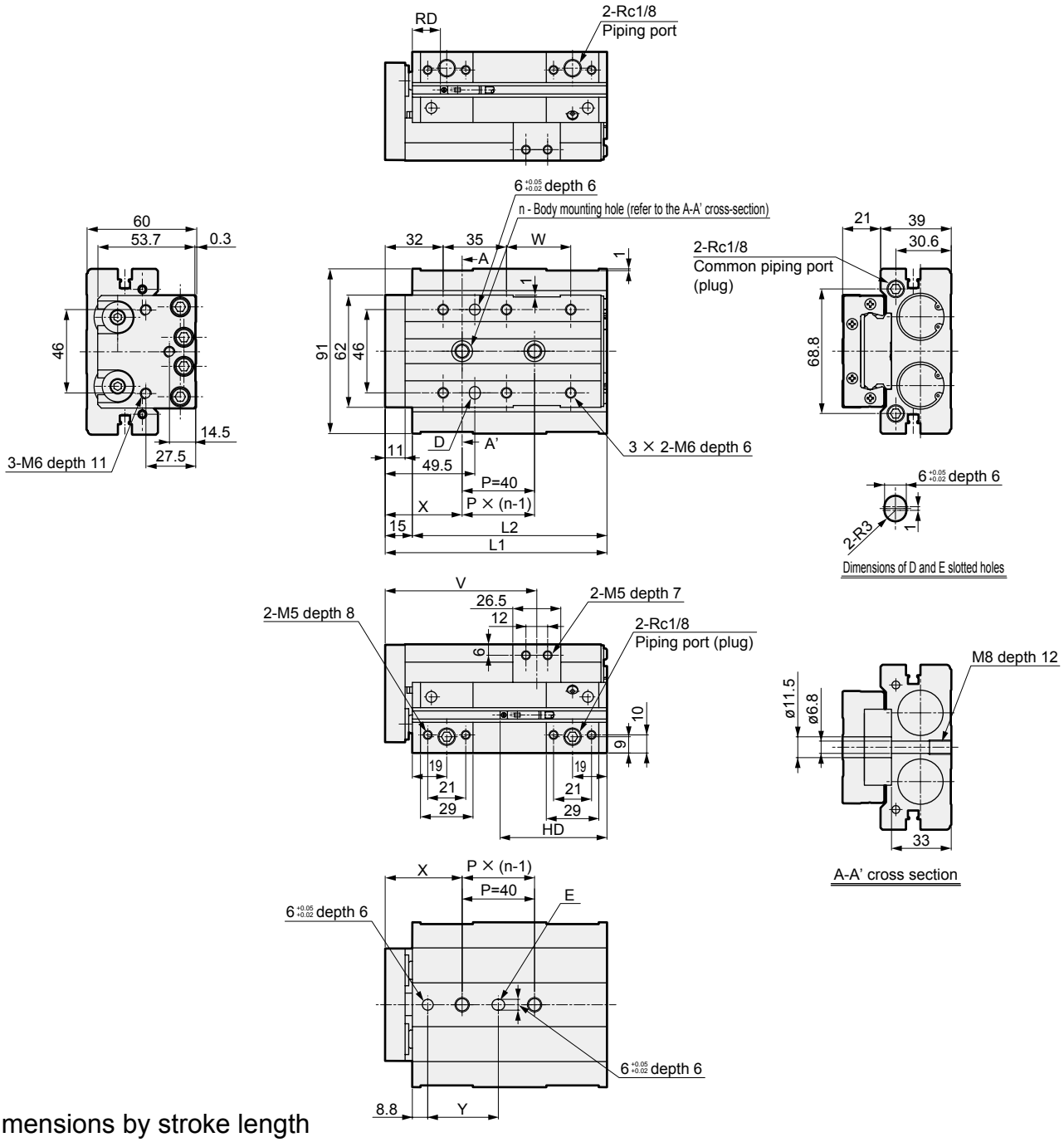

Dimensions by stroke length

Stroke length		10	20	30	40	50
L1		122.5			132.5	142.5
L2		107.5			117.5	127.5
n		2			3	2
V		83.8			93.8	103.8
W		35.5			45.5	55.5
X		42.5			45.5	60.5
Y		39			42	57
T0/5*	RD	18.5				
T2/3*	HD	79	69	59		
T2/3W*	RD	21				
	HD	76.5	66.5	56.5		

* The same dimensions apply to the anti-rust (U).

*1 : When using a positioning hole, use a pin of dimensions that do not require press fitting.
The recommended tolerance of a pin is JIS tolerance m6 or less.

*2 : When using rear piping, refer to the cautions of 1. Common; when piping on page 196.

LCM
LCR
LCG
LCW
LCX
STM
STG
STS/STL
STR2
UCA2
ULK*
JSK/M2
JSG
JSC3/JSC4
USSD
UFCD
USC
UB
JSB3
LMB
LML
HCM
HCA
LBC
CAC4
UCAC2
CAC-N
UCAC-N
RCS2
RCC2
PCC
SHC
MCP
GLC
MFC
BBS
RRC
GRC
RV3*
NHS
HRL
LN
Hand
Chuk
MecHnd/Chuk
ShkAbs
FJ
FK
SpdContr
Ending

Dimensions (bore size: ø25)

CAD

● LCG-25

Stroke length: 75, 100, 125, 150
(Body mounting hole in the figure shows 100 mm stroke length)

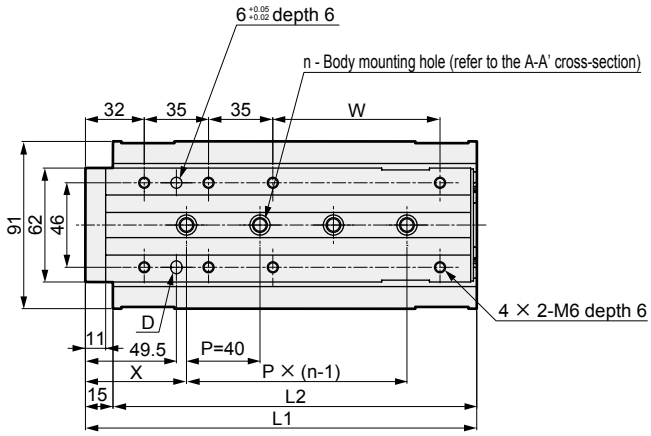

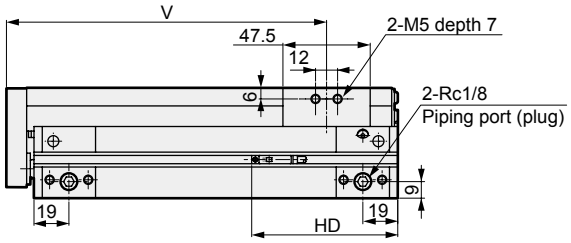

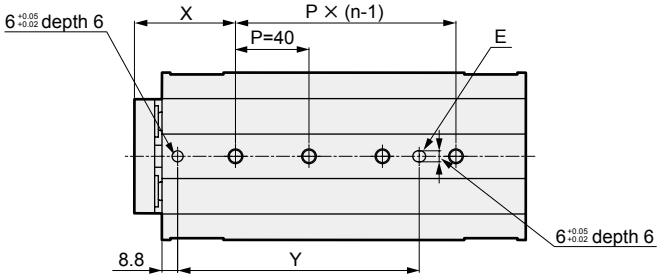

Dimensions by stroke length

Stroke length		75	100	125	150
L1		188	213	238	263
L2		173	198	223	248
n		3	4	5	
V		138.8	163.8	188.8	213.8
W		66	91	116	141
X		60	55	45	60
Y		96.5	131.5	161.5	176.5
T0/5*	RD	18.5			
T2/3*	HD	79.5			
T2/3W*	RD	21			
	HD	77			

* The same dimensions apply to the anti-rust (U).

*1 : When using a positioning hole, use a pin of dimensions that do not require press fitting.
The recommended tolerance of a pin is JIS tolerance m6 or less.

*2 : When using rear piping, refer to the cautions of 1. Common; when piping on page 196.

LCM
LCR
LCG
LCW
LCX
STM
STG
STS/STL
STR2
UCA2
ULK*
JSK/M2
JSG
JSC3/JSC4
USSD
UFCD
USC
UB
JSB3
LMB
LML
HCM
HCA
LBC
CAC4
UCAC2
CAC-N
UCAC-N
RCS2
RCC2
PCC
SHC
MCP
GLC
MFC
BBS
RRC
GRC
RV3*
NHS
HRL
LN
Hand
Chuk
MecHnd/Chuk
ShkAbs
FJ
FK
SpdContr
Ending

Dimensions: Option

CAD

● Stroke adjusting stopper (S1 to S6)

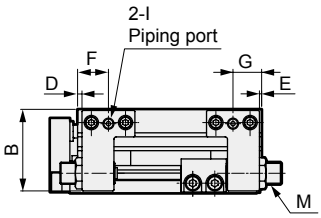

· For ø8

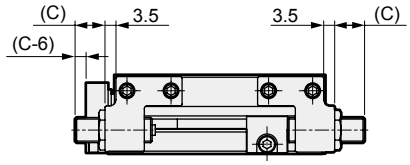

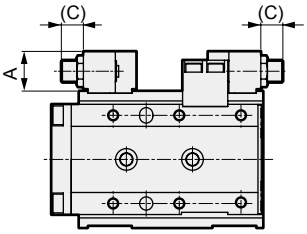

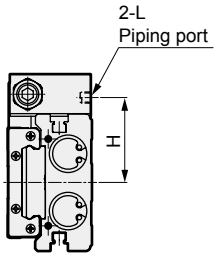

● Shock absorber stopper (A1 to A6)

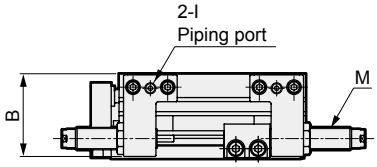

· For ø8

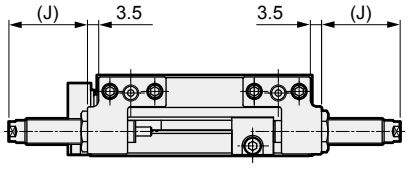

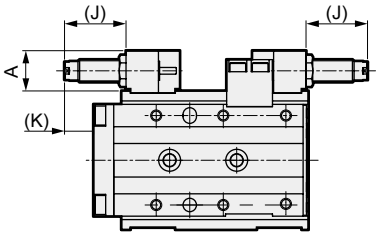

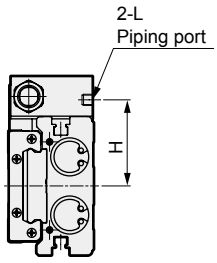

*1: F, H and L dimensions are only for the types with port on the stopper (S*D* and A*D*).
*2: The figure of the stroke adjusting stopper (S1 to S6) is for 5 mm adjustable stroke range. If the adjustable stroke range is increased, the C dimension increases accordingly.
*3: S3** to S6** and A3** to A6** are not available for the position locking.

Code / Bore size (mm)	A	B	C Adjustable stroke range 5 mm	C 15 mm	C 25 mm	D	E	F	G	H	I	J	K	L	M	Shock absorber stopper adjustable stroke range (one side)
ø6	14	19.9	11	21	-	4	1	13.5	10.5	24	M3 depth 3	21	9	M3 depth 3	M8×0.75	9
ø8	15.6	24.5	9.5	19.5	-	0.5	0.5	11	11	27.3	M5 depth 4	25	15.5	M5 depth 4	M8×0.75	13.5
ø12	15.5	29	12	22	32	1	1	13	13	31	M5 depth 4	25	12	M5 depth 4	M8×0.75	14.5
ø16	18	37	10	20	30	2	1	14	13	39	M5 depth 4	28.5	14	M5 depth 4	M10×1	15
ø20	20.5	45.5	14.5	24.5	34.5	4	2.5	20.5	19	47	Rc1/8	28.5	9.5	M5 depth 4	M12×1	13
ø25	20.5	57	11.5	21.5	31.5	2.5	2.5	19	19	54.5	Rc1/8	25.5	8	M5 depth 4	M12×1	10

Dimensions: Option

● With buffer (B, BL)

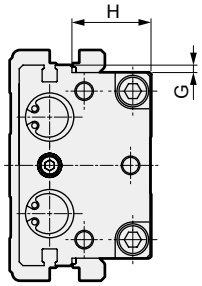

Option code: BL

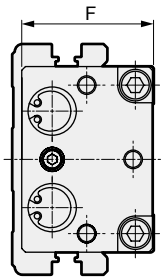

Option code: B

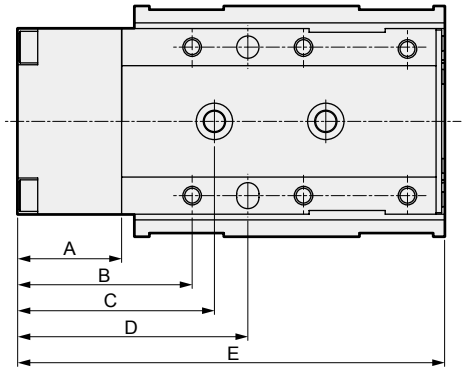

Code / Bore size (mm)	A	B	C Stroke length (mm) 10	20	30	40	50	75	100	125	150	D
ø6	22.5	34	45	45	42.5	43.5	45	-	-	-	-	41.5
ø8	21.5	34.5	42.5	42.5	42.5	41	42.5	39.5	-	-	-	44.5
ø12	27	44	55.5	55.5	55.5	54	50	52.5	65	-	-	56.5
ø16	28	47	53	53	53	64.5	54.5	58	56	68	-	62
ø20	31	52	65	65	65	71	69	66	66	73	71	69.5
ø25	34	55	65.5	65.5	65.5	68.5	83.5	83	78	68	83	72.5

Code / Bore size (mm)	E Stroke length (mm) 10	20	30	40	50	75	100	125	150	F	G	H
ø6	82.5	82.5	92.5	112.5	122.5	-	-	-	-	20	3.5	11.2
ø8	80.5	80.5	90.5	109.5	119.5	144.5	-	-	-	23.5	3.2	13.5
ø12	109	109	109	119	129	163	188	-	-	29	3.2	16
ø16	115	115	115	125	135	177	202	227	-	35.5	1	21.3
ø20	130.5	130.5	130.5	140.5	150.5	187	212	237	262	45.5	4	24.5
ø25	145.5	145.5	145.5	155.5	165.5	211	236	261	286	56	4.5	31

Note: The dimensions not listed are the same as those of the standard.

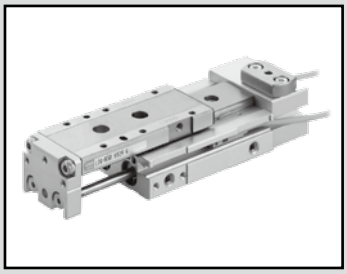

Linear slide cylinder Double acting/position locking

LCG-Q Series

● Bore size: ø8/ø12/ø16/ø20/ø25

JIS symbol

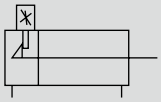

Specifications

Item		LCG-Q				
Bore size mm		ø8	ø12	ø16	ø20	ø25
Actuation		Double acting				
Working fluid		Compressed air				
Max. working pressure MPa		0.7 (≈100 psi, 7 bar)				
Min. working pressure MPa		0.15 (≈22 psi, 1.5 bar)				
Proof pressure MPa		1.05 (≈150 psi, 10.5 bar)				
Ambient temperature °C		-10 (14°F) to 60 (140°F) (no freezing)				
Port size	Main body side	M5			Rc1/8	
	Main body back	None				
Stroke tolerance mm		$^{+2.0}_{0}$ (*1)				
Working piston speed mm/s		50 to 500				
Cushion		With rubber cushion				
Position locking mechanism		Head side				
Holding force N		At PULL, theoretical thrust x 0.7 (at 0.7 MPa (≈100 psi, 7 bar))				
Lubrication		Not required (use turbine oil class 1 ISO VG32 if necessary for lubrication)				
Allowable absorbed energy J		Refer to Table 3 on page 188.				

*1: Note that there will be a slight gap between the end plate and floating bush if no stopper is attached.
*2: The stroke adjusting stopper for 0.3 MPa and over working pressure is the metal sealing.

Stroke length

Bore size (mm)	Standard stroke length (mm)
ø8	10, 20, 30, 40, 50, 75
ø12	10, 20, 30, 40, 50, 75, 100
ø16	10, 20, 30, 40, 50, 75, 100, 125
ø20	10, 20, 30, 40, 50, 75, 100, 125, 150
ø25	10, 20, 30, 40, 50, 75, 100, 125, 150

Note: Products with stroke lengths other than the above are not available.

With buffer specifications

Specifications other than the below are same as the above common specifications.

Item		Description				
Bore size mm		ø8	ø12	ø16	ø20	ø25
Buffer stroke length mm		4	9		10	
Buffer part spring load	Set N	5	10	13	17	21
	Operating N	8	14	20	25	29

*1: In the type with buffer, adjusting the rod side stroke length will shorten the buffer stroke length and increase the spring load when set.
*2: Keep the buffer stroke length less than the stroke length above. Otherwise, malfunctions or damage may result.

Theoretical thrust table

Refer to page 189.

LCM
LCR
LCG
LCW
LCX
STM
STG
STS/STL
STR2
UCA2
ULK*
JSK/M2
JSG
JSC3/JSC4
USSD
UFCD
USC
UB
JSB3
LMB
LML
HCM
HCA
LBC
CAC4
UCAC2
CAC-N
UCAC-N
RCS2
RCC2
PCC
SHC
MCP
GLC
MFC
BBS
RRC
GRC
RV3*
NHS
HRL
LN
Hand
Chuk
MecHnd/Chuk
ShkAbs
FJ
FK
SpdContr
Ending

Switch specifications

● 1-color/2-color display

Item	Reed 2-wire				Proximity 2-wire		Proximity 3-wire		
	T0H/T0V		T5H/T5V		T2H/T2V	T2WH/ T2WV	T3H/ T3V	T3PH/ T3PV	T3WH/ T3WV
Applications	For programmable controller, relay		For programmable controller, relay, IC circuit (without indicator lamp), serial connection		Dedicated for programmable controller		For programmable controller, relay		
Output method	-		-		-		NPN output	PNP output	NPN output
Power supply voltage	-		-		-		10 to 28 VDC		
Load voltage	12/24 VDC	110 VAC	5/12/24 VDC	110 VAC	10 to 30 VDC	24 VDC ±10%	30 VDC or less		
Load current	5 to 50 mA	7 to 20 mA	50 mA or less	20 mA or less	5 to 20 mA		100 mA or less		50 mA or less
Indicator lamp	LED (Lit when ON)		Without indicator lamp		LED (Lit when ON)	Red/green LED (Lit when ON)	LED (Lit when ON)	Yellow LED (Lit when ON)	Red/green LED (Lit when ON)
Leakage current	0 mA				1 mA or less		10 μA or less		
Weight g	1 m:18 3 m:49 5 m:80								

Item	Proximity 2-wire	Proximity 3-wire	Proximity 2-wire		Proximity 3-wire		
	F2S	F3S	F2H/F2V	F2YH/ F2YV	F3H/F3V	F3PH/F3PV (Made to order)	F3YH/ F3YV
Applications	Dedicated for programmable controller	For programmable controller, relay	Dedicated for programmable controller		For programmable controller, relay		
Output method	-	NPN output	-		NPN output	PNP output	NPN output
Power supply voltage	-	10 to 28 VDC	-		10 to 28 VDC	4.5 to 28 VDC	10 to 28 VDC
Load voltage	10 to 30 VDC	30 VDC or less	10 to 30 VDC	24 VDC ±10%	30 VDC or less		
Load current	5 to 20 mA	50 mA or less	5 to 20 mA		50 mA or less		
Indicator lamp	LED (Lit when ON)		Yellow LED (Lit when ON)	Red/green LED (Lit when ON)	Yellow LED (Lit when ON)	Yellow LED (Lit when ON)	Red/green LED (Lit when ON)
Leakage current	1 mA or less	10 μA or less	1 mA or less		10 μA or less		
Weight g	1 m:10 3 m:29						

*1 : Refer to Ending Page 1 for detailed switch specifications and dimensions.
*2 : Switches other than the above models, such as switches with connectors, are also available. Refer to Ending Page 1.
*3 : The max. load current is 20 mA at 25°C. The current is lower than 20 mA if the operating ambient temperature around the switch is higher than 25°C. (5 to 10 mA at 60°C)
*4 : The F type switch uses a bend-resistant lead wire.

Cylinder weight

● Position locking (Unit: g)

Bore size (mm)	Basic Stroke length (mm)								
	10	20	30	40	50	75	100	125	150
ø8	280	280	310	390	420	510	-	-	-
ø12	570	570	570	620	670	860	1,000	-	-
ø16	880	870	860	940	1,020	1,370	1,560	1,760	-
ø20	1,450	1,440	1,430	1,550	1,670	2,110	2,400	2,690	2,980
ø25	2,360	2,340	2,320	2,500	2,680	3,480	3,900	4,320	4,740

● Additional weight of options (Unit: g)

Bore size (mm)	Option/stopper code		With buffer
	S1/S2	A1/A2	B/BL
ø8	40	50	40
ø12	70	80	70
ø16	110	120	80
ø20	170	180	150
ø25	290	300	320

LCM
LCR
LCG
LCW
LCX
STM
STG
STS/STL
STR2
UCA2
ULK*
JSK/M2
JSG
JSC3/JSC4
USSD
UFCD
USC
UB
JSB3
LMB
LML
HCM
HCA
LBC
CAC4
UCAC2
CAC-N
UCAC-N
RCS2
RCC2
PCC
SHC
MCP
GLC
MFC
BBS
RRC
GRC
RV3*
NHS
HRL
LN
Hand
Chuk
MecHnd/Chuk
ShkAbs
FJ
FK
SpdContr
Ending

How to order (ø8 to ø16)

Without switch (built-in magnet for switch)

LCG-Q - 8 - 40 ——— S2

With switch (built-in magnet for switch)

LCG-Q - 12 - 40 - F2H* - R - A1DT

Model No.

Ⓐ Bore size

Ⓑ Stroke length

Ⓒ Switch model No. *11

Ⓓ Switch quantity

Ⓔ Option

⚠ Precautions for model No. selection

*1 : To change the adjustable stroke length, use the discrete stroke adjusting stopper on page 169.
*2 : For the adjustable stroke range with a shock absorber stopper, refer to the stopper dimensions table on page 162.
*3 : For the port position, refer to the stopper dimensions on page 162.
*4 : The port positions of the standard without stopper are ① and ③ in the figure below.
*5 : Combination of the stroke adjusting stopper and shock absorber stopper is made to order.
*6 : Can be selected for the type with stopper only.
*7 : A switch for buffer should be purchased separately. Refer to how to order a switch on page 168.
*8 : Refer to the selection table below for combinations of options.
*9 : A1** and A2** of ø8 with 10 mm stroke length or less and ø12/ø16 with 20 mm stroke length or less are made to order since adjustment is not possible with the standard stopper.
*10 : The rust proof is made to order.
*11 : The stroke adjusting stopper for 0.3 MPa and over working pressure is the metal sealing.

[Example of model No.]

LCG-Q-12-40-F2H-R-A1DT

Model: Linear slide cylinder Double acting/position locking LCG-Q

Ⓐ Bore size : ø12
Ⓑ Stroke length : 40 mm
Ⓒ Switch model No. : Proximity/2-wire
Axial lead wire
Ⓓ Switch quantity : 1 on rod side
Ⓔ Other options : Shock absorber
Stopper position ①
With side and bottom ports
Material, steel (nitriding)

● Stopper position

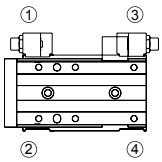

Code	Description
Ⓐ Bore size	
8	ø8
12	ø12
16	ø16

Ⓑ Stroke length (mm)

		Bore size (ø) 8	12	16
10	10	●	●	●
20	20	●	●	●
30	30	●	●	●
40	40	●	●	●
50	50	●	●	●
75	75	●	●	●
100	100		●	●
125	125			●
150	150			

Ⓒ Switch model No.

Axial lead wire	Radial lead wire	Contact	Voltage AC	Voltage DC	Indicator lamp	Lead wire	Bore size ø8	ø12	ø16
-	F2S*	Proximity		●	1-color display	2-wire	●	●	
-	F3S*	Proximity		●	1-color display	3-wire	●	●	
F2H*	F2V*	Proximity		●	1-color display	2-wire	●	●	
F3H*	F3V*	Proximity		●	1-color display	3-wire	●	●	
F3PH*	F3PV*	Proximity		●	1 color display (PNP output) (made to order)	3-wire	●	●	
F2YH*	F2YV*	Proximity		●	2-color display	2-wire	●	●	
F3YH*	F3YV*	Proximity		●	2-color display	3-wire	●	●	
T0H*	T0V*	Reed	●	●	1-color display	2-wire			●
T5H*	T5V*	Reed	●	●	no indicator lamp	2-wire			●
T2H*	T2V*	Proximity		●	1-color display	2-wire			●
T3H*	T3V*	Proximity		●	1-color display	3-wire			●
T3PH*	T3PV*	Proximity		●	1-color display (PNP output)	3-wire			●
T2WH*	T2WV*	Proximity		●	2-color display	2-wire			●
T3WH*	T3WV*	Proximity		●	2-color display	3-wire			●

*** Lead wire length**

Blank	1 m (standard)		●	
3	3 m (option)		●	
5	5 m (option)			●

Ⓓ Switch quantity

R	1 on rod side
H	1 on head side
D	2

Ⓔ Option

Blank	No option	
S Stroke adjusting stopper		
5 mm stroke adjustment on one side		***1, *5, *8**
S1**	Stopper position ①	Stopper mount position
S2**	Stopper position ②	Stopper mount position
A Shock absorber stopper		***2, *5, *8**
A1**	Stopper position ①	Stopper mount position
A2**	Stopper position ②	Stopper mount position
**** part**		
Blank	Port on the stopper: without port	
D	Port on the stopper: Side and bottom ports	*3, *6
Blank	Stopper block material: steel	
T	Stopper block material: steel (nitriding)	*6
B With buffer		***7, *8**
B	Without switch groove	
BL	With switch groove	

LCG-Q position locking selection table

(Combination with stroke adjusting stopper, shock absorber stopper)

○: Available — : Not available

Model No. code	Option code: Bore size	Stroke length	Stroke adjusting stopper S1	S2	S3	S4	S5	S6	Shock absorber stopper A1	A2	A3	A4	A5	A6
LCG-Q LCG-Q -B, BL	ø8	10	○	○	—	—	—	—	—	—	—	—	—	—
		20 or more	○	○	—	—	—	—	○	○	—	—	—	—
	ø12 to ø25	10 to 20	○	○	—	—	—	—	—	—	—	—	—	—
		30 or more	○	○	—	—	—	—	○	○	—	—	—	—

The table above also applies to a combination with option code D (with port on the stopper) or T (alloy steel stopper block (nitriding)).

How to order (ø20, ø25)

Without switch (built-in magnet for switch)

LCG-Q - 20 - 40 ——— S2 U

With switch (built-in magnet for switch)

LCG-Q - 20 - 40 - T2H* - R - A1DT U

Model No.

Ⓐ Bore size

Ⓑ Stroke length

Ⓒ Switch model No. *11

Ⓓ Switch quantity

Ⓔ Option

Ⓕ Anti-rust treatment

Code	Description
Ⓐ Bore size	
20	ø20
25	ø25
Ⓑ Stroke length (mm)	
10	10
20	20
30	30
40	40
50	50
75	75
100	100
125	125
150	150

Ⓒ Switch model No.

Axial lead wire	Radial lead wire	Contact	Voltage AC	Voltage DC	Indicator lamp	Lead wire
T0H*	**T0V***	Reed	●	●	1-color display	2-wire
T5H*	**T5V***	Reed	●	●	Without indicator lamp	2-wire
T2H*	**T2V***	Proximity		●	1-color display	2-wire
T3H*	**T3V***	Proximity		●	1-color display	3-wire
T3PH*	**T3PV***	Proximity		●	1-color display (PNP output)	3-wire
T2WH*	**T2WV***	Proximity		●	2-color display	2-wire
T3WH*	**T3WV***	Proximity		●	2-color display	3-wire

*** Lead wire length**	
Blank	1 m (standard)
3	3 m (option)
5	5 m (option)
Ⓓ Switch quantity	
R	1 on rod side
H	1 on head side
D	2
Ⓔ Option	
Blank	No option
S Stroke adjusting stopper	
5 mm stroke adjustment on one side	***1, *5, *8**
S1**	Stopper position ① (Stopper mount position)
S2**	Stopper position ② (Stopper mount position)
A Shock absorber stopper	***2, *5, *8**
A1**	Stopper position ① (Stopper mount position)
A2**	Stopper position ② (Stopper mount position)
**** part**	
Blank	Port on the stopper: without port
D	Port on the stopper: side and bottom ports *3, *6
Blank	Stopper block material: steel
T	Stopper block material: steel (nitriding) *6
B With buffer	***7, *8**
B	Without switch groove
BL	With switch groove
Ⓕ Anti-rust treatment	
Blank	None
U	Anti-rust treated product (table/guide) *10

⚠ Precautions for model No. selection

*1 : To change the adjustable stroke length, use the discrete stroke adjusting stopper on page 169.
*2 : For the adjustable stroke range with a shock absorber stopper, refer to the stopper dimensions table on page 162.
*3 : For the port position, refer to the stopper dimensions on page 162.
*4 : The port positions of the standard without stopper are ① and ③ in the figure below.
*5 : Combination of the stroke adjusting stopper and shock absorber stopper is made to order.
*6 : Can be selected for the type with stopper only.
*7 : A switch for buffer should be purchased separately. Refer to how to order a switch on page 168.
*8 : Refer to the selection table below for combinations of options.
*9 : A1** and A2** with 20 mm stroke length or less are made to order since adjustment is not possible with the standard stopper.
*10: The table is steel.
To prevent rust, select "U" for an environment where the temperature and humidity is high or condensation may occur on the product surface.
*11: The stroke adjusting stopper for 0.3 MPa and over working pressure is the metal sealing.

● Stopper position

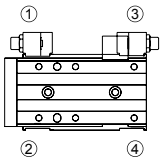

[Example of model No.]

LCG-Q-20-40-F2H-R-A1DT

Model: Linear slide cylinder Double acting/position locking LCG-Q

Ⓐ Bore size : ø20
Ⓑ Stroke length : 40 mm
Ⓒ Switch model No. : Proximity/2-wire
Axial lead wire
Ⓓ Switch quantity : 1 on rod side
Ⓔ Other options : Shock absorber
Stopper position ①
With side and bottom ports
Material, steel (nitriding)

U: Anti-rust treated product (ø20, ø25)

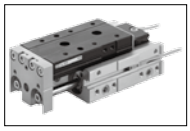

The table and rail surface rustproofing reduces rust in high-humidity environments and near ionizers.

The table and rail are black.

Specifications for rechargeable battery

(Catalog No. CC-1226A)

● Design compatible with rechargeable battery manufacturing process.

LCG-Q - ... - P4*

LCM
LCR
LCG
LCW
LCX
STM
STG
STS/STL
STR2
UCA2
ULK*
JSK/M2
JSG
JSC3/JSC4
USSD
UFCD
USC
UB
JSB3
LMB
LML
HCM
HCA
LBC
CAC4
UCAC2
CAC-N
UCAC-N
RCS2
RCC2
PCC
SHC
MCP
GLC
MFC
BBS
RRC
GRC
RV3*
NHS
HRL
LN
Hand
Chuk
MecHnd/Chuk
ShkAbs
FJ
FK
SpdContr
Ending

How to order switch

For ø8 to ø12

SW - F2H

Switch model No.
(Item Ⓒ on page 166)

For ø16 to ø25

SW - T2H3

Switch model No.
(Item Ⓒ on pages 166, 167)

● Buffer part

SW - F 2 V 3

Output	
2	DC 2-wire proximity
3	DC 3-wire proximity

Radial lead wire

Lead wire length	
Blank	1 m (standard)
3	3 m (option)

How to order a stopper set

● Set of a stopper and stroke adjusting stopper or shock absorber stopper
● Use it when changing from the standard to the stroke adjusting stopper or shock absorber stopper.

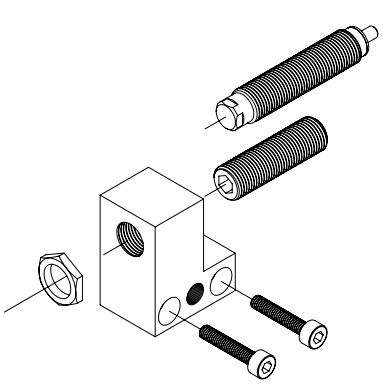

LCG - 12 - S 2 D - S02

Bore size
(Item Ⓐ on pages 166, 167)

Ⓐ Stopper	
S	Stroke adjusting stopper
A	Shock absorber stopper

Ⓑ Stopper installation position *1	
1	Stopper position ①
2	Stopper position ②

Ⓒ Port on the stopper	
Blank	Without port
D	With side and bottom ports

Ⓓ Adjustable stroke length *2/*3	
Blank	Adjustable stroke range 5 mm
S02	Adjustable stroke range 15 mm
S03	Adjustable stroke range 25 mm

*1: The adjustable stroke length changes depending on the stroke; see the table below.
*2: ø8 is not available for S03.
*3: Cannot be selected for the shock absorber stopper "A".

Precautions when purchasing the stopper set

Discrete stroke adjusting stopper S01 is built into the stroke adjusting stopper set. Add the part shown on the right according to the stroke length and adjustable stroke length.

—: Not applicable

Model No. code	Option code		Discrete stroke adjusting stopper Adjustable stroke length (mm)		
	Bore size	Stroke length	-5	-15	-25
LCG-Q Series	ø8	10	S02	—	—
		20 or more	N/A	S02	—
	ø12 to ø25	10	S03	—	—
		20	S02	S03	—
		30 or more	N/A	S02	S03

● Stopper set weight (Unit: g)

Stopper	S1,S2			A1,A2
Port on the stopper	Blank, D			
Adjustable stroke length	Blank	S02	S03	Blank
ø8	21	25	—	27
ø12	28	31	34	33
ø16	42	47	52	49
ø20	77	85	92	86
ø25	87	94	101	95

How to order discrete stroke adjusting stopper

- Hexagon socket set screw with urethane
- Use when changing the adjustable stroke range or when using a custom stroke length.

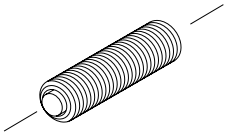

LCG - 12 - S02

Bore size
(Item Ⓐ on pages 166, 167)

Ⓐ Adjustable stroke range	
S01	Single side 5 mm (standard)
S02	Single side 15 mm
S03	Single side 25 mm

Specify S01, S02 or S03 in Ⓐ.
Note: S03 is not available for ø8.
Some models may not be available and adjustable stroke range may differ from the above depending on the Model No.

Precautions when purchasing discrete stopper

Note that the combination will be as shown on the right according to the stroke length and adjustable stroke length.

— : Not available

Model No. code	Option code		Discrete stroke adjusting stopper Adjustable stroke length (mm)			Discrete shock absorber stopper
	Bore size	Stroke length	-5	-15	-25	
LCG Series -S1, S2 -A1, A2	ø8	10	S02	—	—	—
		20 or more	S01	S02	—	A01
	ø12 to ø25	10	S03	—	—	—
		20	S02	S03	—	—
		30 or more	S01	S02	S03	A01

- Discrete stroke adjusting stopper weight (Unit: g)

Adjustable stroke range	S01	S02	S03
ø8	7	10	—
ø12	7	11	14
ø16	11	16	22
ø20	22	30	37
ø25	23	30	37

How to order discrete shock absorber stopper

- Shock absorber set
- Use when changing from the stroke adjusting stopper or shock absorber stopper.

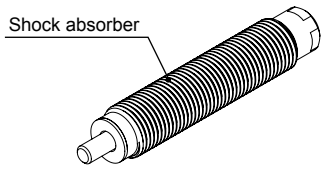

LCG - 12 - A01

Bore size
(Item Ⓐ on pages 166, 167)

Note: Some models may not be available depending on the specifications. Refer to pages 166 and 167.
Note: For the adjustable stroke range with a shock absorber stopper, refer to page 162.

Applicable shock absorber model No.

Model	Shock absorber model No.	Weight (g)
LCG-8	SKL-0805	12
LCG-12	SKL-0805	12
LCG-16	SKL-1006	19
LCG-20	SKL-1208	31
LCG-25	SKL-1208	31

How to order discrete stopper block

- Use it when changing from the standard to the stroke adjusting stopper or shock absorber stopper.

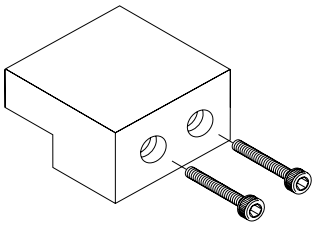

LCG - 12 - SB1 T

Bore size
(Item Ⓐ on pages 166, 167)

Ⓐ Stopper block	
SB1	ø8: For 30 mm stroke length or less
	ø12 to ø25: For 50 mm stroke length or less
SB2	ø8: For 40 mm stroke length or more
	ø12 to ø25: For 75 mm stroke length or more

Ⓑ Material	
Blank	Stopper block material: steel
T	Stopper block material: steel (nitriding)

- Discrete stopper block weight (Unit: g)

Block	SB1(T)	SB2(T)
ø8	14	24
ø12	23	37
ø16	38	72
ø20	60	99
ø25	112	206

LCM
LCR
LCG
LCW
LCX
STM
STG
STS/STL
STR2
UCA2
ULK*
JSK/M2
JSG
JSC3/JSC4
USSD
UFCD
USC
UB
JSB3
LMB
LML
HCM
HCA
LBC
CAC4
UCAC2
CAC-N
UCAC-N
RCS2
RCC2
PCC
SHC
MCP
GLC
MFC
BBS
RRC
GRC
RV3*
NHS
HRL
LN
Hand
Chuk
MecHnd/Chuk
ShkAbs
FJ
FK
SpdContr
Ending

Internal structure and parts list

● LCG-Q

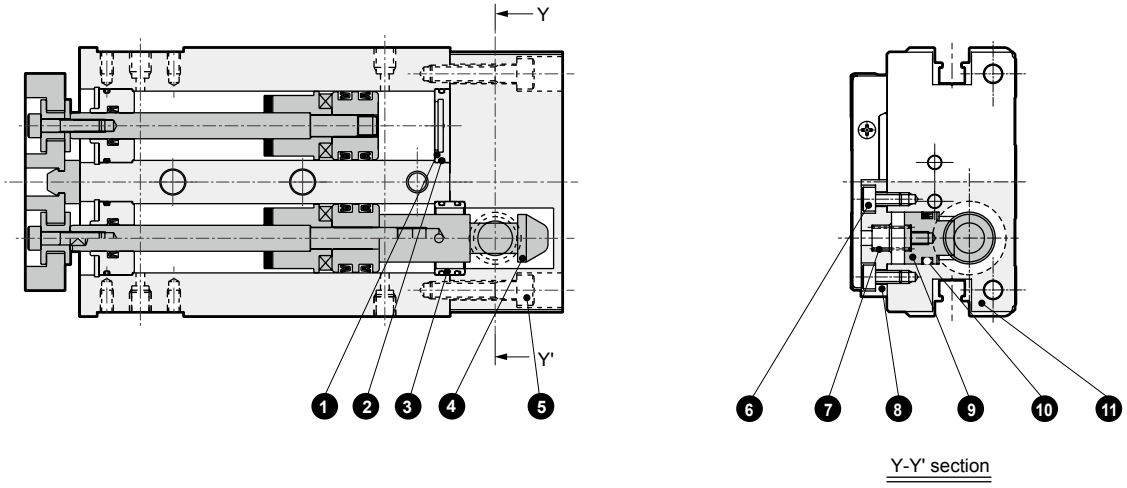

Parts list

No.	Part name	Material	Remarks	No.	Part name	Material	Remarks
1	Cover	Aluminum alloy		6	Hexagon socket head cap screw	Alloy steel	Zinc chromate
2	Gasket	Nitrile rubber		7	Coil spring	Steel	
3	Joint ring	ø8: Stainless steel ø12 to 25: Aluminum alloy	ø12 to ø25: Chromate	8	Stopper cover	Aluminum alloy	Alumite
				9	Stopper piston	Carbon steel	Nitriding
4	Sleeve	Carbon steel	Nitriding	10	Stopper packing	Nitrile rubber	
5	Hexagon socket head cap screw	Alloy steel	Zinc chromate	11	Head cover	Aluminum alloy	Alumite

Repair parts list

Bore size (mm)	Kit No.	Repair parts No.	
		Repair parts for position locking	Basic parts are repair parts
ø8	LCG-Q-8K	10	4 5 9 12 16 20
ø12	LCG-Q-12K		
ø16	LCG-Q-16K		
ø20	LCG-Q-20K		
ø25	LCG-Q-25K		

Note: The repair part numbers for the base section correspond to those in the double acting/single rod parts list on page 146.

Dimensions

● LCG-Q

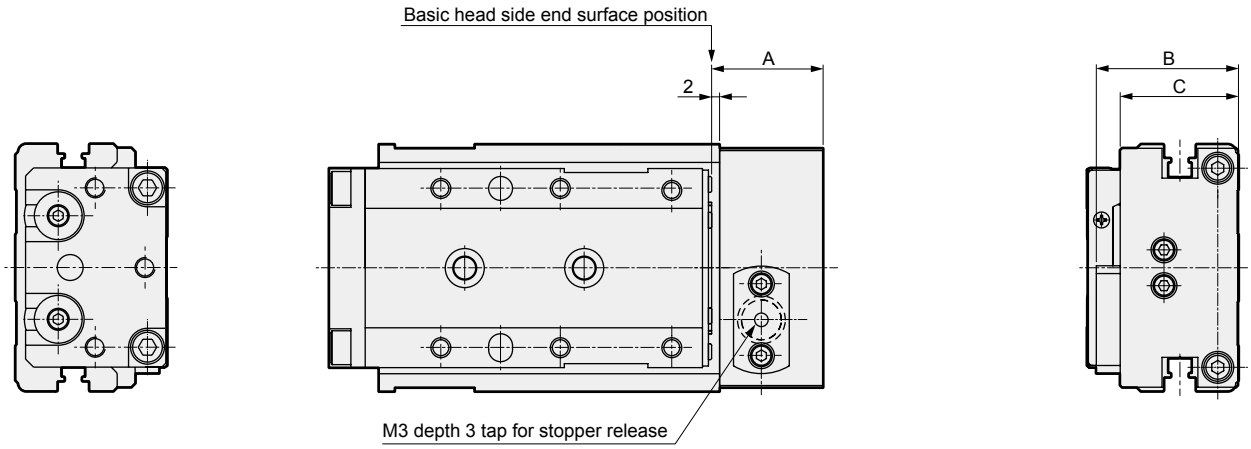

● LCG-Q-*-*-B (with buffer)

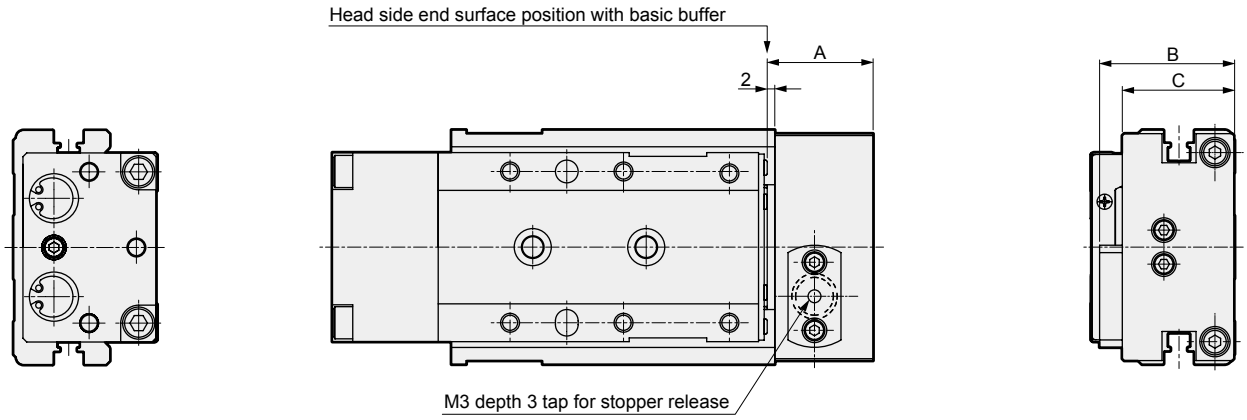

Code / Bore size (mm)	A	B	C
ø8	23	28	22
ø12	24.5	30.5	24.5
ø16	28	35.7	29.7
ø20	30	39	33
ø25	30	48	42

Note: Dimensions other than those listed above are the same as those of double acting/single rod.

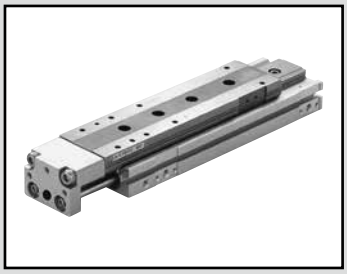

Linear slide cylinder Double acting/single rod clean-room specifications

LCG-P7* Series

● Bore size: ø6/ø8/ø12/ø16/ø20/ø25

JIS symbol 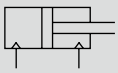

RoHS CAD

Specifications

Item		LCG-P7*					
Bore size mm		ø6	ø8	ø12	ø16	ø20	ø25
Actuation		Double acting					
Working fluid		Compressed air					
Max. working pressure MPa		0.7 (≈100 psi, 7 bar)					
Min. working pressure MPa		0.15 (≈22 psi, 1.5 bar)					
Proof pressure MPa		1.05 (≈150 psi, 10.5 bar)					
Ambient temperature °C		-10 (14°F) to 60 (140°F) (no freezing)					
Port size	Main body side	M3	M5			Rc1/8	
	Main body back	M3				M5	Rc1/8
Pressure relief port size		M3	M5			Rc1/8	
Stroke tolerance mm		$^{+2.0}_{0}$ (*1)					
Working piston speed mm/s		50 to 500					
Cushion		With rubber cushion					
Lubrication		Not available					
Allowable absorbed energy J		Refer to Table 3 on page 188.					

*1: Note that there will be a slight gap between the end plate and floating bush if no stopper is attached.
*2: The stroke adjusting stopper for 0.3 MPa and over working pressure is the metal sealing.

Stroke length

Bore size (mm)	Standard stroke length (mm)
ø6	10, 20, 30, 40, 50
ø8	10, 20, 30, 40, 50, 75
ø12	10, 20, 30, 40, 50, 75, 100
ø16	10, 20, 30, 40, 50, 75, 100, 125
ø20	10, 20, 30, 40, 50, 75, 100, 125, 150
ø25	10, 20, 30, 40, 50, 75, 100, 125, 150

Note: Products with stroke lengths other than the above are not available.

Theoretical thrust table

Refer to page 189.

LCM
LCR
LCG
LCW
LCX
STM
STG
STS/STL
STR2
UCA2
ULK*
JSK/M2
JSG
JSC3/JSC4
USSD
UFCD
USC
UB
JSB3
LMB
LML
HCM
HCA
LBC
CAC4
UCAC2
CAC-N
UCAC-N
RCS2
RCC2
PCC
SHC
MCP
GLC
MFC
BBS
RRC
GRC
RV3*
NHS
HRL
LN
Hand
Chuk
MecHnd/Chuk
ShkAbs
FJ
FK
SpdContr
Ending

Switch specifications

● 1-color/2-color display

Item	Reed 2-wire				Proximity 2-wire		Proximity 3-wire		
	T0H/T0V		T5H/T5V		T2H/T2V	T2WH/ T2WV	T3H/ T3V	T3PH/ T3PV	T3WH/ T3WV
Applications	For programmable controller, relay		For programmable controller, relay, IC circuit (without indicator lamp), serial connection		Dedicated for programmable controller		For programmable controller, relay		
Output method	-		-		-		NPN output	PNP output	NPN output
Power supply voltage	-		-		-		10 to 28 VDC		
Load voltage	12/24 VDC	110 VAC	5/12/24 VDC	110 VAC	10 to 30 VDC	24 VDC ±10%	30 VDC or less		
Load current	5 to 50 mA	7 to 20 mA	50 mA or less	20 mA or less	5 to 20 mA		100 mA or less		50 mA or less
Indicator lamp	LED (Lit when ON)		Without indicator lamp		LED (Lit when ON)	Red/green LED (Lit when ON)	LED (Lit when ON)	Yellow LED (Lit when ON)	Red/green LED (Lit when ON)
Leakage current	0 mA				1 mA or less		10 μA or less		
Weight g	1 m:18 3 m:49 5 m:80								

Item	Proximity 2-wire	Proximity 3-wire	Proximity 2-wire		Proximity 3-wire		
	F2S	F3S	F2H/F2V	F2YH/ F2YV	F3H/F3V	F3PH/F3PV (Made to order)	F3YH/ F3YV
Applications	Dedicated for programmable controller	For programmable controller, relay	Dedicated for programmable controller		For programmable controller, relay		
Output method	-	NPN output	-		NPN output	PNP output	NPN output
Power supply voltage	-	10 to 28 VDC	-		10 to 28 VDC	4.5 to 28 VDC	10 to 28 VDC
Load voltage	10 to 30 VDC	30 VDC or less	10 to 30 VDC	24 VDC ±10%	30 VDC or less		
Load current	5 to 20 mA	50 mA or less	5 to 20 mA		50 mA or less		
Indicator lamp	LED (Lit when ON)		Yellow LED (Lit when ON)	Red/green LED (Lit when ON)	Yellow LED (Lit when ON)	Yellow LED (Lit when ON)	Red/green LED (Lit when ON)
Leakage current	1 mA or less	10 μA or less	1 mA or less		10 μA or less		
Weight g	1 m:10 3 m:29						

*1 : Refer to Ending Page 1 for detailed switch specifications and dimensions.
*2 : Switches other than the above models, such as switches with connectors, are also available. Refer to Ending Page 1.
*3 : The max. load current is 20 mA at 25°C. The current is lower than 20 mA if the operating ambient temperature around the switch is higher than 25°C. (5 to 10 mA at 60°C)
*4 : The F type switch uses a bend-resistant lead wire.

Cylinder weight

● Clean-room specifications (Unit: g)

Bore size (mm)	Basic Stroke length (mm)								
	10	20	30	40	50	75	100	125	150
ø6	170	170	190	250	270	-	-	-	-
ø8	270	270	300	380	410	500	-	-	-
ø12	550	550	550	600	650	840	980	-	-
ø16	890	880	870	950	1,030	1,380	1,570	1,770	-
ø20	1,470	1,460	1,450	1,570	1,690	2,130	2,420	2,710	3,000
ø25	2,410	2,390	2,370	2,550	2,730	3,530	3,950	4,370	4,790

● Weight of variation/option (stopper) (Unit: g)

Bore size (mm)	Option/stopper code	
	S1 to S4	S5/S6
ø6	30	40
ø8	40	60
ø12	70	100
ø16	110	150
ø20	170	250
ø25	290	380

LCM
LCR
LCG
LCW
LCX
STM
STG
STS/STL
STR2
UCA2
ULK*
JSK/M2
JSG
JSC3/JSC4
USSD
UFCD
USC
UB
JSB3
LMB
LML
HCM
HCA
LBC
CAC4
UCAC2
CAC-N
UCAC-N
RCS2
RCC2
PCC
SHC
MCP
GLC
MFC
BBS
RRC
GRC
RV3*
NHS
HRL
LN
Hand
Chuk
MecHnd/Chuk
ShkAbs
FJ
FK
SpdContr
Ending

How to order (ø6 to ø16)

Without switch (built-in magnet for switch)

LCG - 8 - 40 ——— S5 P72

With switch (built-in magnet for switch)

LCG - 12 - 40 - F2H* - R - S1DT P72

Model No.

Ⓐ Bore size

Ⓑ Stroke length

Ⓒ Switch model No. *6

Ⓓ Switch quantity

Ⓔ Option

Ⓕ Clean-room specifications

⚠ Precautions for model No. selection

*1 : For the port position, refer to the stopper dimensions on page 162.
*2 : The port positions of the standard without stopper are ① and ③ in the figure below.
*3 : Can be selected for the type with stopper only.
*4 : When two switches are necessary for the type with S*** of ø6 to ø8 with 30 mm stroke length or less, select the F□H type switch.
*5 : The anti-rust is made to order.
*6 : The stroke adjusting stopper for 0.3 MPa and over working pressure is the metal sealing.
*7 : When changing the stopper position from the head side to the rod side, the stopper must be purchased separately according to the stroke length and adjustable stroke length. Refer to "Precautions when purchasing discrete stopper" on page 145. Adjustable stroke lengths of 15 mm and 25 mm may not be possible depending on the stroke length.

[Example of model No.]

LCG-12-40-F2H*-R-S1DT-P72

Model: Linear slide cylinder Double acting/single rod (clean-room specifications) LCG-P7*

Ⓐ Bore size : ø12
Ⓑ Stroke length : 40 mm
Ⓒ Switch model No. : Proximity/2-wire Axial lead wire
Ⓓ Switch quantity : 1 on rod side
Ⓔ Other options : Stroke adjusting stopper Stopper position ① With side and bottom ports Material, steel (nitriding)
Ⓕ Clean-room specifications : Exhaust port

● Stopper position

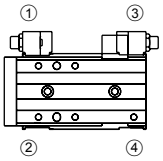

Code	Description
Ⓐ Bore size	
6	ø6
8	ø8
12	ø12
16	ø16

Ⓑ Stroke length (mm)

		Bore size (ø)			
		6	8	12	16
10	10	●	●	●	●
20	20	●	●	●	●
30	30	●	●	●	●
40	40	●	●	●	●
50	50	●	●	●	●
75	75		●	●	●
100	100			●	●
125	125				●
150	150				

Ⓒ Switch model No.

Axial lead wire	Radial lead wire	Contact	Voltage AC	Voltage DC	Indicator lamp	Lead wire	Bore size ø6	ø8	ø12	ø16
-	**F2S***	Proximity		●	1-color display	2-wire	●	●	●	
-	**F3S***			●		3-wire				
F2H*	**F2V***			●		2-wire				
F3H*	**F3V***			●		3-wire				
F3PH*	**F3PV***			●	1 color display (PNP output) (made to order)	3-wire				
F2YH*	**F2YV***			●	2-color display	2-wire				
F3YH*	**F3YV***			●		3-wire				
T0H*	**T0V***	Reed	●	●	1-color display	2-wire				●
T5H*	**T5V***		●	●	no indicator lamp					
T2H*	**T2V***	Proximity		●	1-color display	2-wire				
T3H*	**T3V***			●		3-wire				
T3PH*	**T3PV***			●	1-color display (PNP output)	3-wire				
T2WH*	**T2WV***			●	2-color display	2-wire				
T3WH*	**T3WV***			●		3-wire				

Lead wire length

Blank	1 m (standard)		●		
3	3 m (option)		●		
5	5 m (option)				●

Ⓓ Switch quantity

R	1 on rod side	●
H	1 on head side	●
D	2	●

Ⓔ Option

Blank	No option		●
S Stroke adjusting stopper 5 mm stroke adjustment on one side			*4
S1**	Stopper position ① (can be changed to ④)	Stopper installation position	●
S2**	Stopper position ② (can be changed to ③)		●
S3**	Stopper position ③ (can be changed to ②) *7		●
S4**	Stopper position ④ (can be changed to ①) *7		●
S5**	Stopper position ①,③		●
S6**	Stopper position ②,④		●
**** part**			
Blank	Port on the stopper: without port		●
D	Port on the stopper: side and bottom ports		● *1, *3
Blank	Stopper block material: steel		●
T	Stopper block material: steel (nitriding)		● *3
Plug attached			
Blank	None		
N	With side piping port plug (not available for ø6)		

Ⓕ Clean-room specifications

	Structure
P72	Exhaust port
P73	Vacuum treatment

How to order (ø20, ø25)

Without switch (built-in magnet for switch)

LCG - 20 - 40 ——— S5 U P72

With switch (built-in magnet for switch)

LCG - 20 - 40 - T2H* - R - S1DT U P72

- LCG: Model No.
- 20: Ⓐ Bore size
- 40: Ⓑ Stroke length
- T2H*: Ⓒ Switch model No. *4
- R: Ⓓ Switch quantity
- S1DT: Ⓔ Option
- U: Ⓕ Anti-rust treatment
- P72: Ⓖ Clean-room specifications

Code	Description
Ⓐ Bore size	
20	ø20
25	ø25

Ⓑ Stroke length (mm)	
10	10
20	20
30	30
40	40
50	50
75	75
100	100
125	125
150	150

Ⓒ Switch model No.

Axial lead wire	Radial lead wire	Contact	Voltage AC	Voltage DC	Indicator lamp	Lead wire
T0H*	T0V*	Reed	●	●	1-color display	2-wire
T5H*	T5V*	Reed	●	●	Without indicator lamp	2-wire
T2H*	T2V*	Proximity		●	1-color display	2-wire
T3H*	T3V*	Proximity		●	1-color display	3-wire
T3PH*	T3PV*	Proximity		●	1-color display (PNP output)	3-wire
T2WH*	T2WV*	Proximity		●	2-color display	2-wire
T3WH*	T3WV*	Proximity		●	2-color display	3-wire

Lead wire length	
Blank	1 m (standard)
3	3 m (option)
5	5 m (option)

Ⓓ Switch quantity	
R	1 on rod side
H	1 on head side
D	2

Ⓔ Option		
Blank	No option	
S Stroke adjusting stopper		
5 mm stroke adjustment on one side		*4
S1**	Stopper position ① (can be changed to ④)	Stopper installation position
S2**	Stopper position ② (can be changed to ③)	Stopper installation position
S3**	Stopper position ③ (can be changed to ②) *6	Stopper installation position
S4**	Stopper position ④ (can be changed to ①) *6	Stopper installation position
S5**	Stopper position ①,③	Stopper installation position
S6**	Stopper position ②,④	Stopper installation position
**** part**		
Blank	Port on the stopper: without port	
D	Port on the stopper: side and bottom ports	
Blank	Stopper block material: steel	
T	Stopper block material: steel (nitriding)	

Ⓕ Anti-rust treatment		
Blank	None	
U	Anti-rust treated product (table/guide)	*4
Plug attached		
Blank	None	
N	With side piping port plug (ø25 cannot be selected.)	

Ⓖ Clean-room specifications	
	Structure
P72	Exhaust port
P73	Vacuum treatment

⚠ Precautions for model No. selection

*1 : For the port position, refer to the stopper dimensions on page 162.
*2 : The port positions of the standard without stopper are ① and ③ in the figure below.
*3 : Can be selected for the type with stopper only.
*4 : The table is steel.
To prevent rust, select "U" for an environment where the temperature and humidity is high or condensation may occur on the product surface.
*5 : The stroke adjusting stopper for 0.3 MPa and over working pressure is the metal sealing.
*6 : When changing the stopper position from the head side to the rod side, the stopper must be purchased separately according to the stroke length and adjustable stroke length. Refer to "Precautions when purchasing discrete stopper" on page 145.
Adjustable stroke lengths of 15 mm and 25 mm may not be possible depending on the stroke length.

[Example of model No.]

LCG-12-40-F2H*-R-S1DT-P72

Model: Linear slide cylinder Double acting/single rod (clean-room specifications) LCG-P7*

- Ⓐ Bore size : ø12
- Ⓑ Stroke length : 40 mm
- Ⓒ Switch model No. : Proximity/2-wire
  Axial lead wire
- Ⓓ Switch quantity : 1 on rod side
- Ⓔ Other options : Stroke adjusting stopper
  Stopper position ①
  With side and bottom ports
  Material, steel (nitriding)
- Ⓕ Clean-room specifications : Exhaust port

● Stopper position

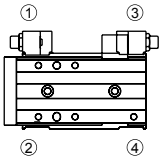

U: Anti-rust treated product (ø20, ø25)

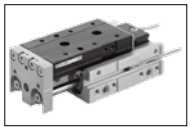

The table and rail surface rustproofing reduces rust in high-humidity environments and near ionizers.

The table and rail are black.

LCM
LCR
LCG
LCW
LCX
STM
STG
STS/STL
STR2
UCA2
ULK*
JSK/M2
JSG
JSC3/JSC4
USSD
UFCD
USC
UB
JSB3
LMB
LML
HCM
HCA
LBC
CAC4
UCAC2
CAC-N
UCAC-N
RCS2
RCC2
PCC
SHC
MCP
GLC
MFC
BBS
RRC
GRC
RV3*
NHS
HRL
LN
Hand
Chuk
MecHnd/Chuk
ShkAbs
FJ
FK
SpdContr
Ending

Dimensions (bore size: ø6)

● LCG-6-P7*

Stroke length: 10, 20, 30
(Body mounting hole in the figure shows 20 mm stroke length)

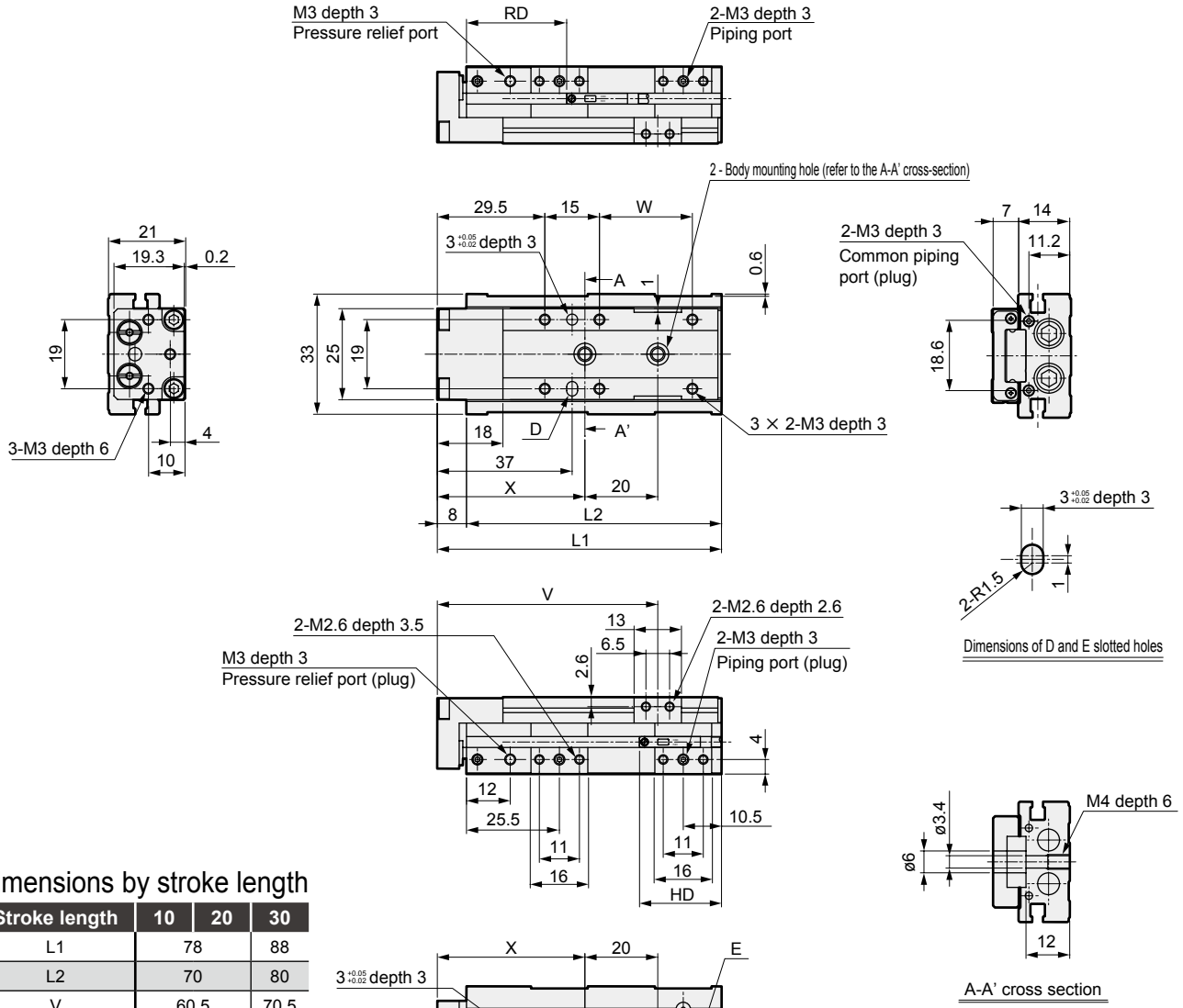

Dimensions by stroke length

Stroke length	10	20	30
L1	78		88
L2	70		80
V	60.5		70.5
W	25.5		35.5
X	40.5		38
Y	45.5		43
RD	27.5		
HD	32.5	22.5	

● Dimensions of protruding section when the F2S or F3S cylinder switch is mounted

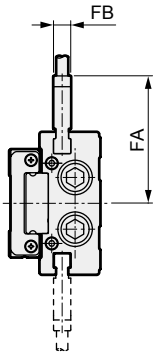

Stroke length	10	20	30
FA	29.6		
FB	4		
RD	26.5		
HD	33.5	23.5	

*1 : When using a positioning hole, use a pin of dimensions that do not require press fitting.
The recommended tolerance of a pin is JIS tolerance m6 or less.

*2 : When using rear piping, refer to the cautions of 1. Common; when piping on page 196.

LCM
LCR
LCG
LCW
LCX
STM
STG
STS/STL
STR2
UCA2
ULK*
JSK/M2
JSG
JSC3/JSC4
USSD
UFCD
USC
UB
JSB3
LMB
LML
HCM
HCA
LBC
CAC4
UCAC2
CAC-N
UCAC-N
RCS2
RCC2
PCC
SHC
MCP
GLC
MFC
BBS
RRC
GRC
RV3*
NHS
HRL
LN
Hand
Chuk
MecHnd/Chuk
ShkAbs
FJ
FK
SpdContr
Ending

Dimensions (bore size: ø6) CAD

● LCG-6-P7*

Stroke length: 40, 50

(Body mounting hole in the figure shows 50 mm stroke length)

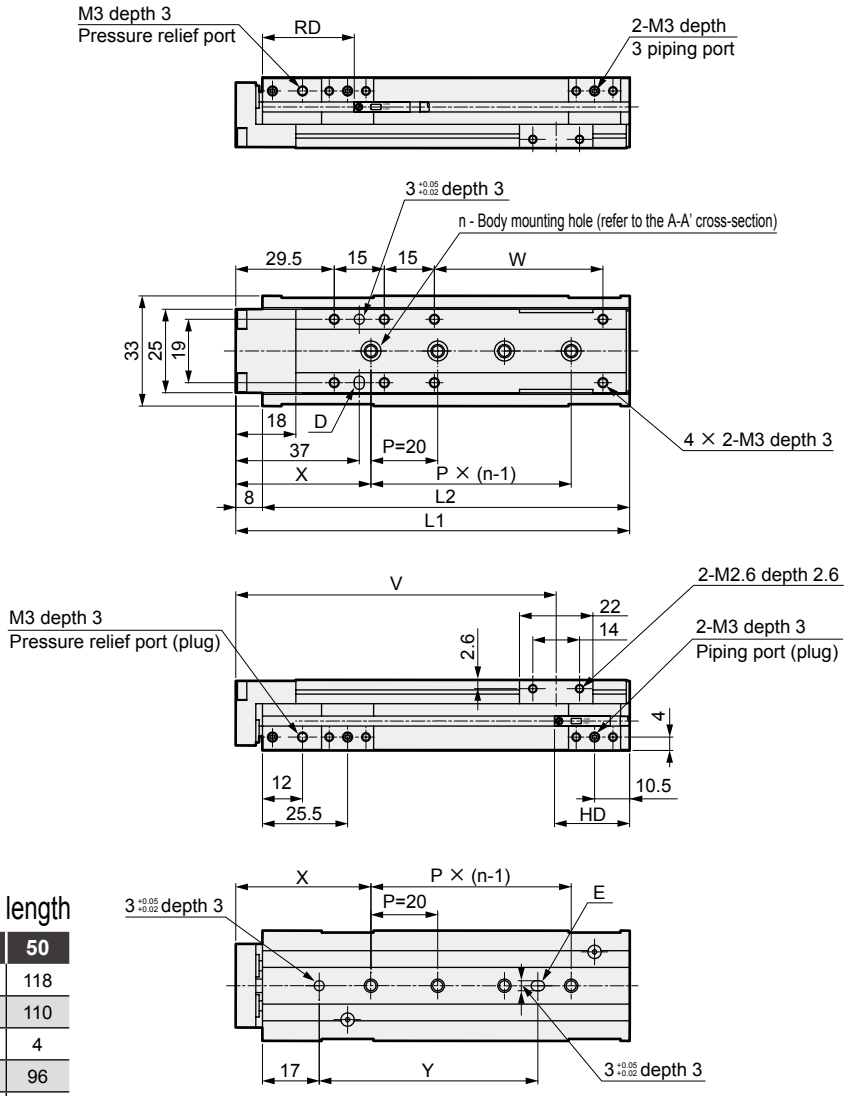

Dimensions by stroke length

Stroke length	40	50
L1	108	118
L2	100	110
n	3	4
V	86	96
W	40.5	50.5
X	39	40.5
Y	44	65.5
RD	37.5	
HD	22.5	

● Dimensions of protruding section when the F2S or F3S cylinder switch is mounted

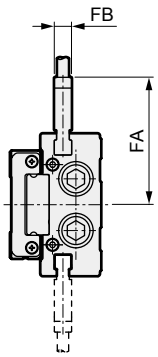

Stroke length	40	50
FA	29.6	
FB	4	
RD	36.5	
HD	23.5	

*1 : When using a positioning hole, use a pin of dimensions that do not require press fitting.
The recommended tolerance of a pin is JIS tolerance m6 or less.

*2 : When using rear piping, refer to the cautions of 1. Common; when piping on page 196.

Dimensions (bore size: ø8)

● LCG-8-P7*

Stroke length: 10, 20, 30

(Body mounting hole in the figure shows 30 mm stroke length)

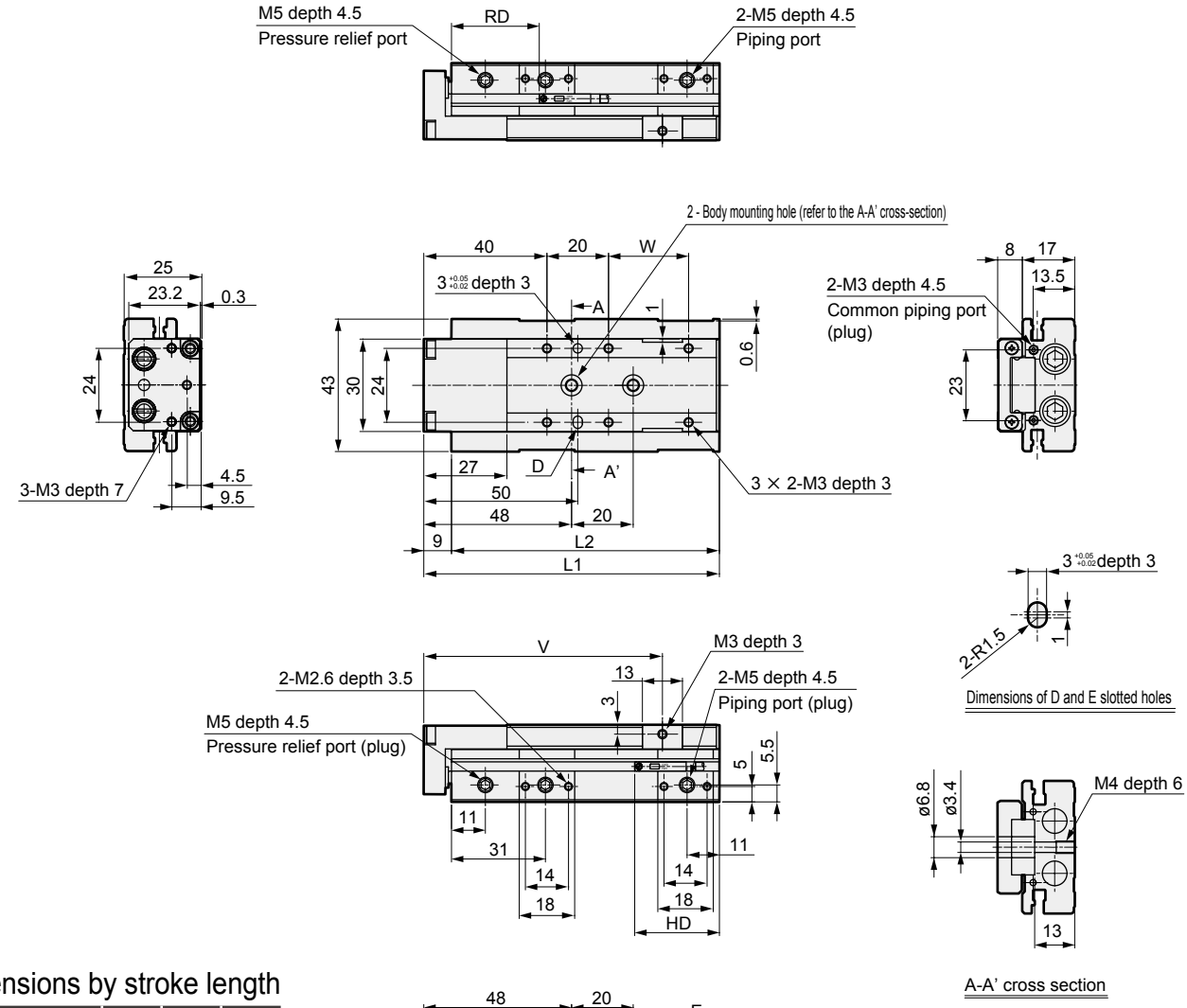

Dimensions by stroke length

Stroke length	10	20	30
L1	86		96
L2	77		87
V	67.5		77.5
W	16		26
RD	33		
HD	34	24	

● Dimensions of protruding section when the F2S or F3S cylinder switch is mounted

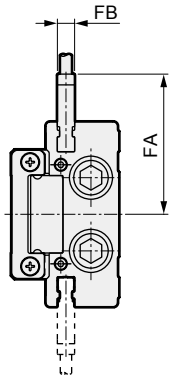

Stroke length	10	20	30
FA	32.6		
FB	4		
RD	32		
HD	35	25	

*1 : When using a positioning hole, use a pin of dimensions that do not require press fitting.
The recommended tolerance of a pin is JIS tolerance m6 or less.

*2 : When using rear piping, refer to the cautions of 1. Common; when piping on page 196.

Dimensions (bore size: ø8)

● LCG-8-P7*

Stroke length: 40, 50, 75
(Body mounting hole in the figure shows 50 mm stroke length)

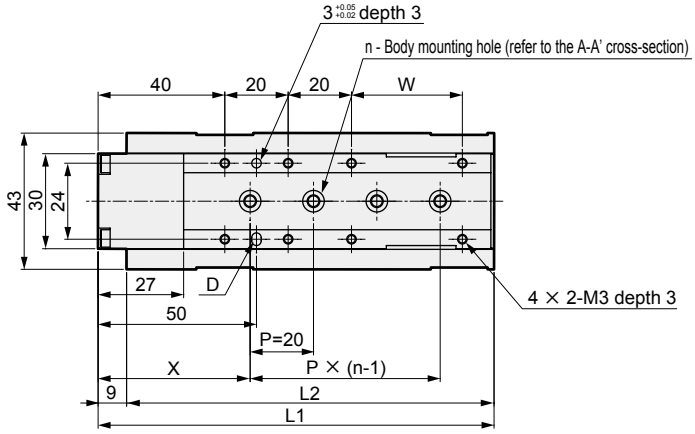

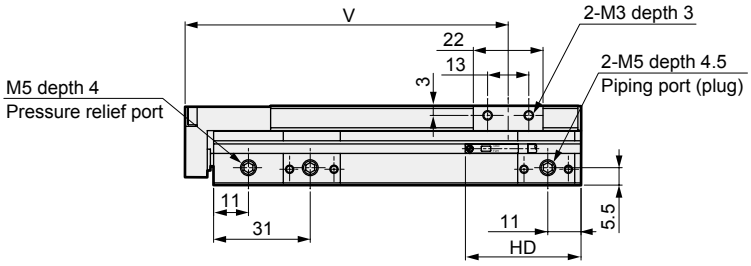

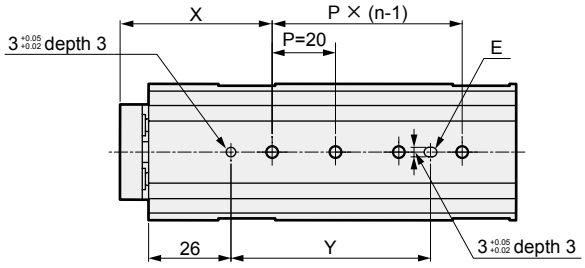

Dimensions by stroke length

Stroke length	40	50	75
L1	115	125	150
L2	106	116	141
n	3	4	5
V	92	102	127
W	25	35	60
X	46.5	48	45
Y	41.5	63	80
RD	34		
HD	32		

● Dimensions of protruding section when the F2S or F3S cylinder switch is mounted

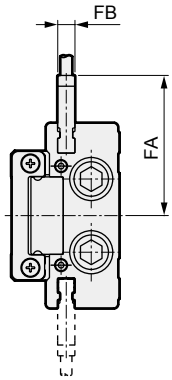

Stroke length	40	50	75
FA	32.6		
FB	4		
RD	33		
HD	33		

*1 : When using a positioning hole, use a pin of dimensions that do not require press fitting.
The recommended tolerance of a pin is JIS tolerance m6 or less.

*2 : When using rear piping, refer to the cautions of 1. Common; when piping on page 196.

LCM
LCR
LCG
LCW
LCX
STM
STG
STS/STL
STR2
UCA2
ULK*
JSK/M2
JSG
JSC3/JSC4
USSD
UFCD
USC
UB
JSB3
LMB
LML
HCM
HCA
LBC
CAC4
UCAC2
CAC-N
UCAC-N
RCS2
RCC2
PCC
SHC
MCP
GLC
MFC
BBS
RRC
GRC
RV3*
NHS
HRL
LN
Hand
Chuk
MecHnd/Chuk
ShkAbs
FJ
FK
SpdContr
Ending

Dimensions (bore size: ø12)

● LCG-12-P7*

Stroke: 10, 20, 30, 40, 50
(Body mounting hole in the figure shows 30 mm stroke length)

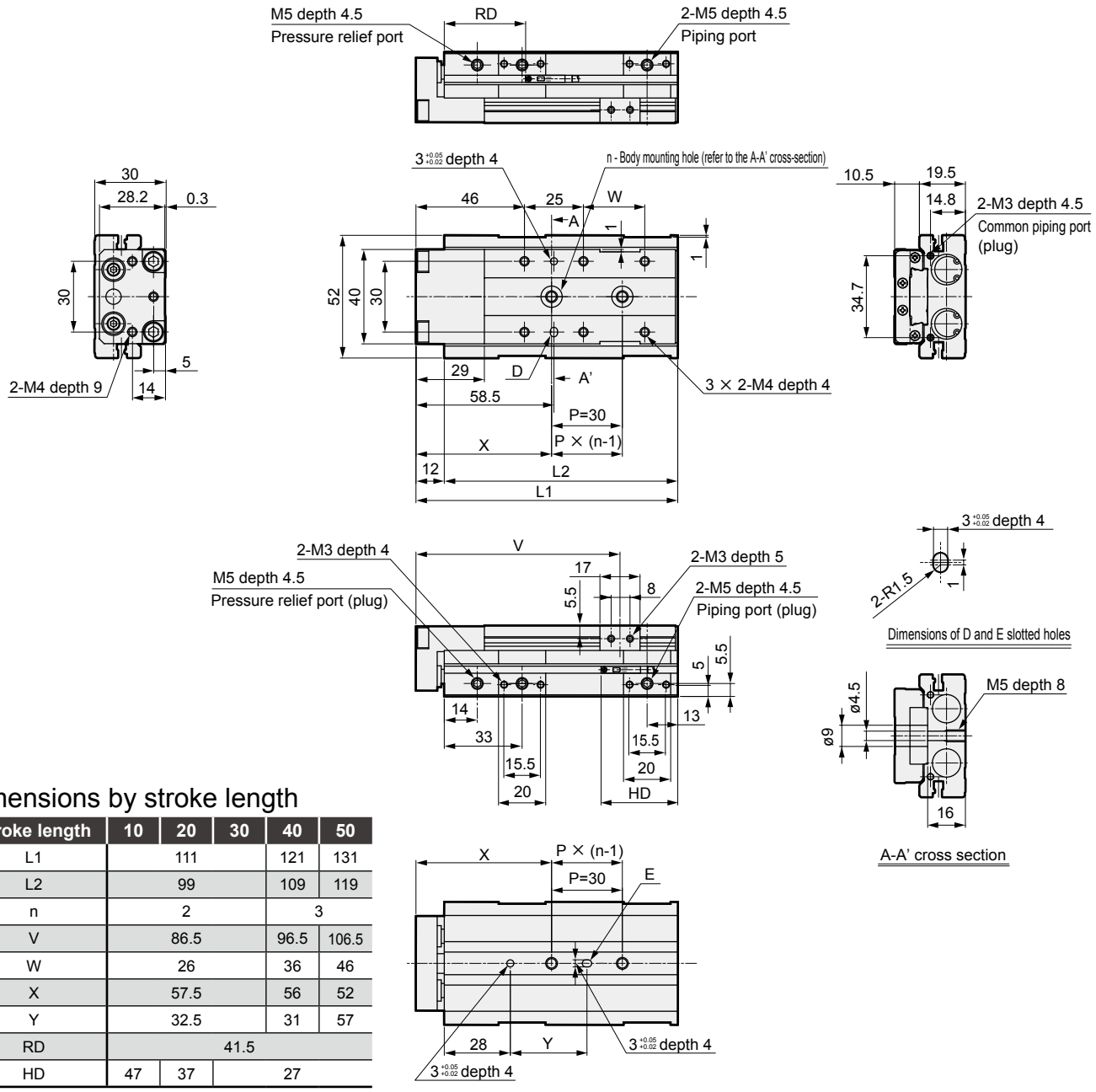

Dimensions by stroke length

Stroke length	10	20	30	40	50
L1	111			121	131
L2	99			109	119
n	2			3	
V	86.5			96.5	106.5
W	26			36	46
X	57.5			56	52
Y	32.5			31	57
RD	41.5				
HD	47	37	27		

● Dimensions of protruding section when the F2S or F3S cylinder switch is mounted

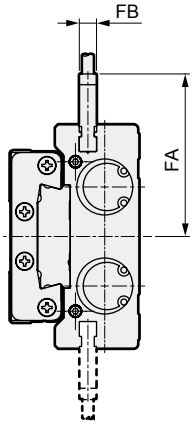

Stroke length	10	20	30	40	50
FA	37.8				
FB	4				
RD	40.5				
HD	48	38	28		

*1 : When using a positioning hole, use a pin of dimensions that do not require press fitting.
The recommended tolerance of a pin is JIS tolerance m6 or less.

*2 : When using rear piping, refer to the cautions of 1. Common; when piping on page 196.

Dimensions (bore size: ø12)

● LCG-12-P7*

Stroke length: 75, 100
(Body mounting hole in the figure shows 100 mm stroke length)

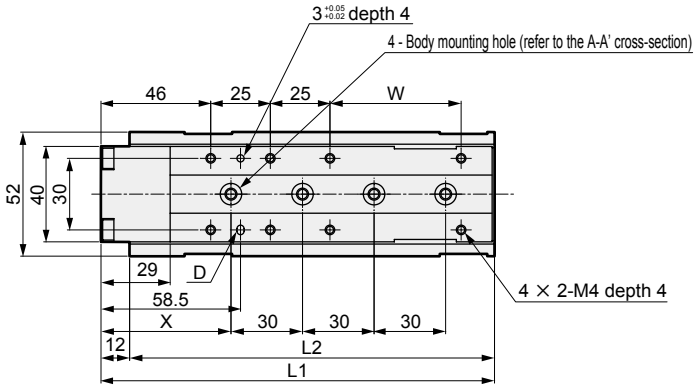

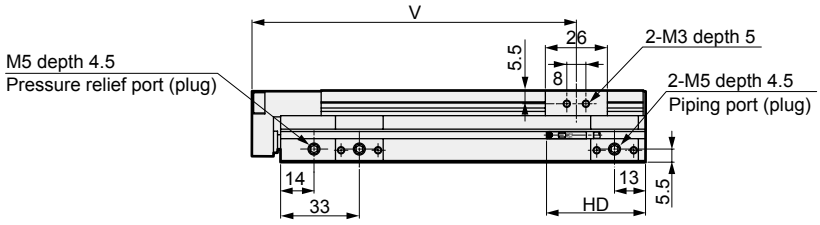

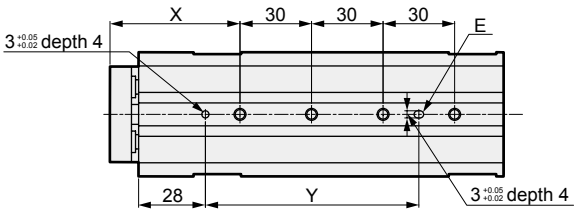

Dimensions by stroke length

Stroke length	75	100
L1	165	190
L2	153	178
V	136	161
W	55	80
X	54.5	67
Y	89.5	102
RD	41.5	
HD	36	

● Dimensions of protruding section when the F2S or F3S cylinder switch is mounted

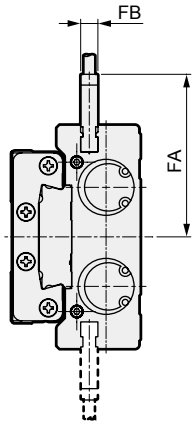

Stroke length	75	100
FA	37.8	
FB	4	
RD	40.5	
HD	37	

*1 : When using a positioning hole, use a pin of dimensions that do not require press fitting.
The recommended tolerance of a pin is JIS tolerance m6 or less.

*2 : When using rear piping, refer to the cautions of (1. Common; when piping) on page 196.

LCM
LCR
LCG
LCW
LCX
STM
STG
STS/STL
STR2
UCA2
ULK*
JSK/M2
JSG
JSC3/JSC4
USSD
UFCD
USC
UB
JSB3
LMB
LML
HCM
HCA
LBC
CAC4
UCAC2
CAC-N
UCAC-N
RCS2
RCC2
PCC
SHC
MCP
GLC
MFC
BBS
RRC
GRC
RV3*
NHS
HRL
LN
Hand
Chuk
MecHnd/Chuk
ShkAbs
FJ
FK
SpdContr
Ending

Dimensions (bore size: ø16)

● LCG-16-P7*

Stroke: 10, 20, 30, 40, 50

(Body mounting hole in the figure shows 30 mm stroke length)

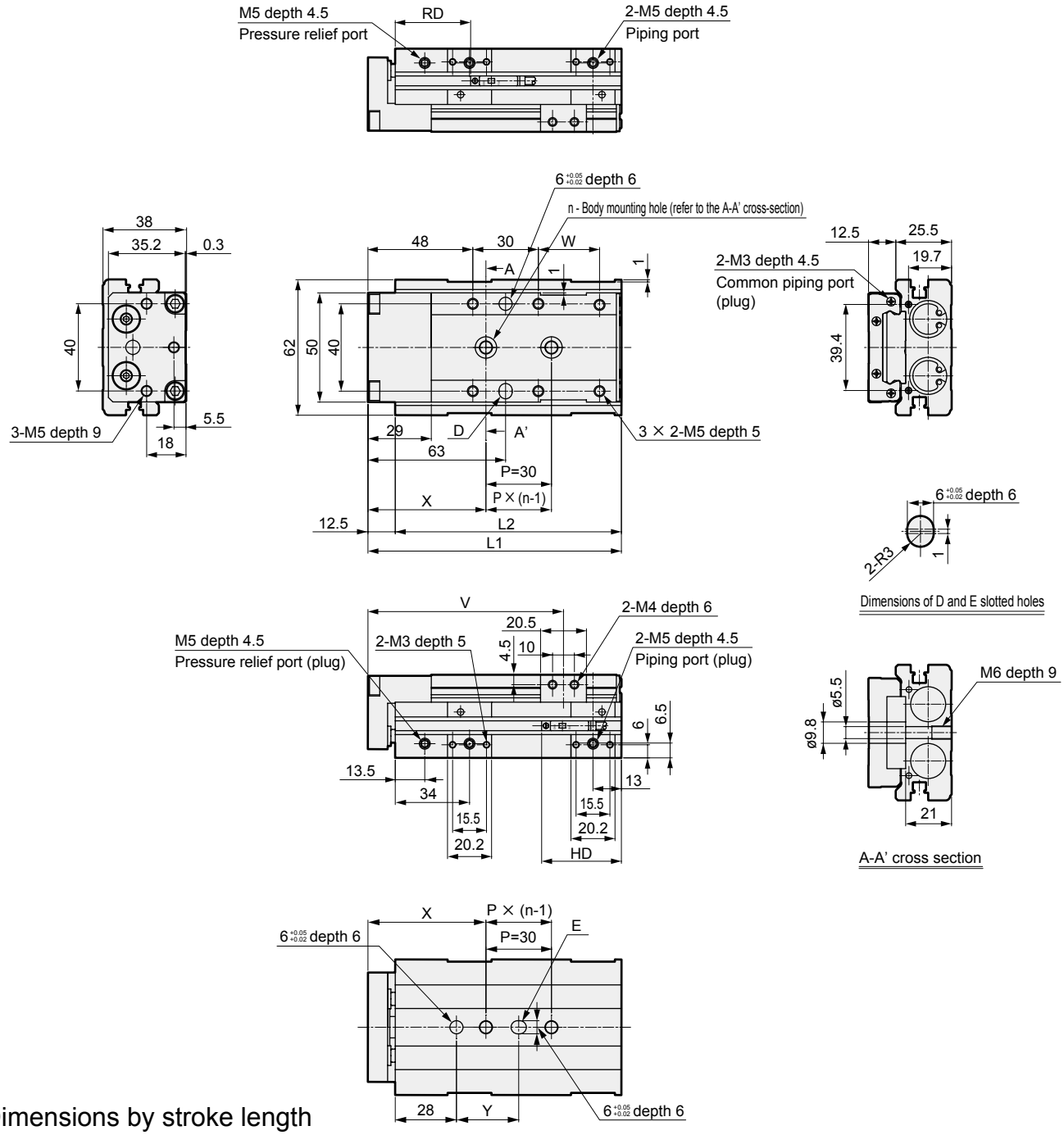

Dimensions by stroke length

Stroke length		10	20	30	40	50
L1		116			126	136
L2		103.5			113.5	123.5
n		2				3
V		89.8			99.8	109.8
W		28			38	48
X		54			65.5	55.5
Y		28.5			40	60
T0*/T5*	RD	37				
T2*/T3*	HD	56.5	46.5	36.5		
T2W*/T3W*	RD	39.5				
	HD	54	44	34		

*1 : When using a positioning hole, use a pin of dimensions that do not require press fitting.
The recommended tolerance of a pin is JIS tolerance m6 or less.

*2 : When using rear piping, refer to the cautions of 1. Common; when piping on page 196.

LCM
LCR
LCG
LCW
LCX
STM
STG
STS/STL
STR2
UCA2
ULK*
JSK/M2
JSG
JSC3/JSC4
USSD
UFCD
USC
UB
JSB3
LMB
LML
HCM
HCA
LBC
CAC4
UCAC2
CAC-N
UCAC-N
RCS2
RCC2
PCC
SHC
MCP
GLC
MFC
BBS
RRC
GRC
RV3*
NHS
HRL
LN
Hand
Chuk
MecHnd/Chuk
ShkAbs
FJ
FK
SpdContr
Ending

Dimensions (bore size: ø16)

● LCG-16-P7*

Stroke length: 75, 100, 125,
(Body mounting hole in the figure shows 75 mm stroke length)

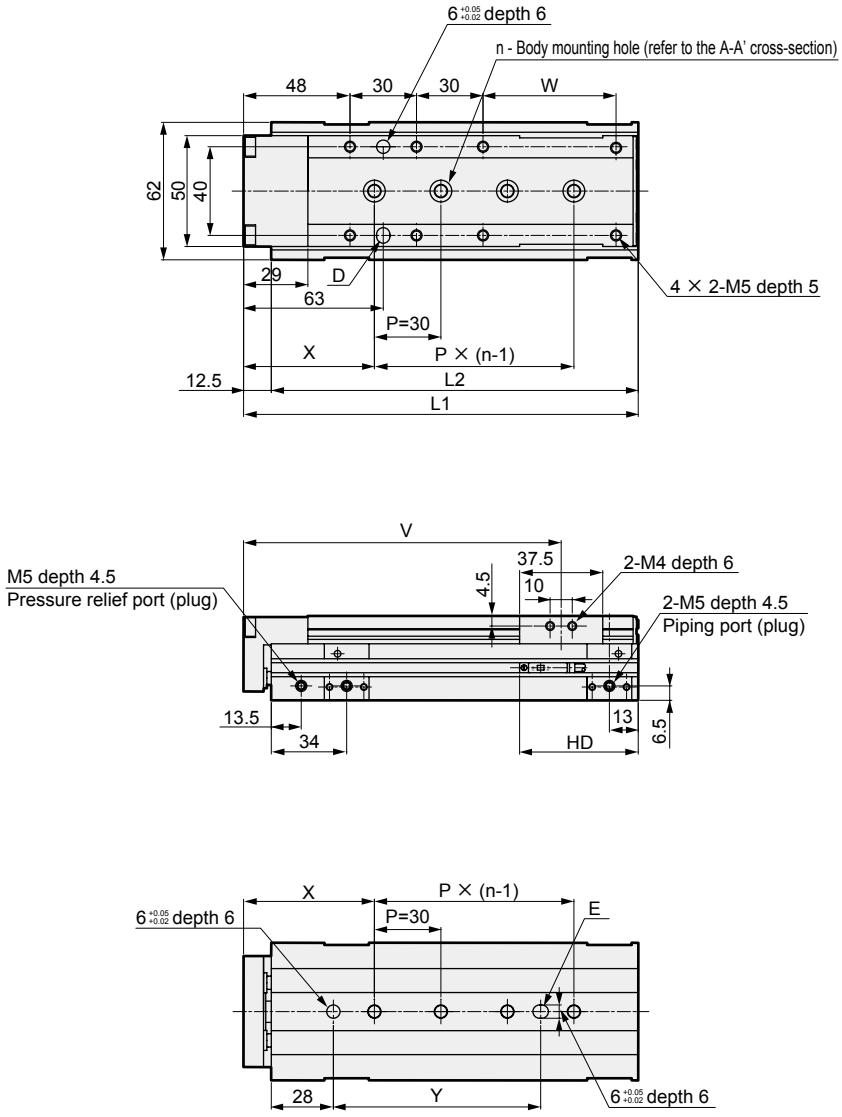

Dimensions by stroke length

Stroke length		75	100	125
L1		178	203	228
L2		165.5	190.5	215.5
n		4	5	
V		143.3	168.3	193.3
W		60	85	110
X		59	57	69
Y		93.5	121.5	133.5
T0*/T5*	RD	37		
T2*/T3*	HD	53.5		
T2W*/T3W*	RD	39.5		
	HD	51		

*1 : When using a positioning hole, use a pin of dimensions that do not require press fitting.
The recommended tolerance of a pin is JIS tolerance m6 or less.

*2 : When using rear piping, refer to the cautions of 1. Common; when piping on page 196.

LCM
LCR
LCG
LCW
LCX
STM
STG
STS/STL
STR2
UCA2
ULK*
JSK/M2
JSG
JSC3/JSC4
USSD
UFCD
USC
UB
JSB3
LMB
LML
HCM
HCA
LBC
CAC4
UCAC2
CAC-N
UCAC-N
RCS2
RCC2
PCC
SHC
MCP
GLC
MFC
BBS
RRC
GRC
RV3*
NHS
HRL
LN
Hand
Chuk
MecHnd/Chuk
ShkAbs
FJ
FK
SpdContr
Ending

Dimensions (bore size: ø20)

● LCG-20-P7*

Stroke: 10, 20, 30, 40, 50
(Body mounting hole in the figure shows 30 mm stroke length)

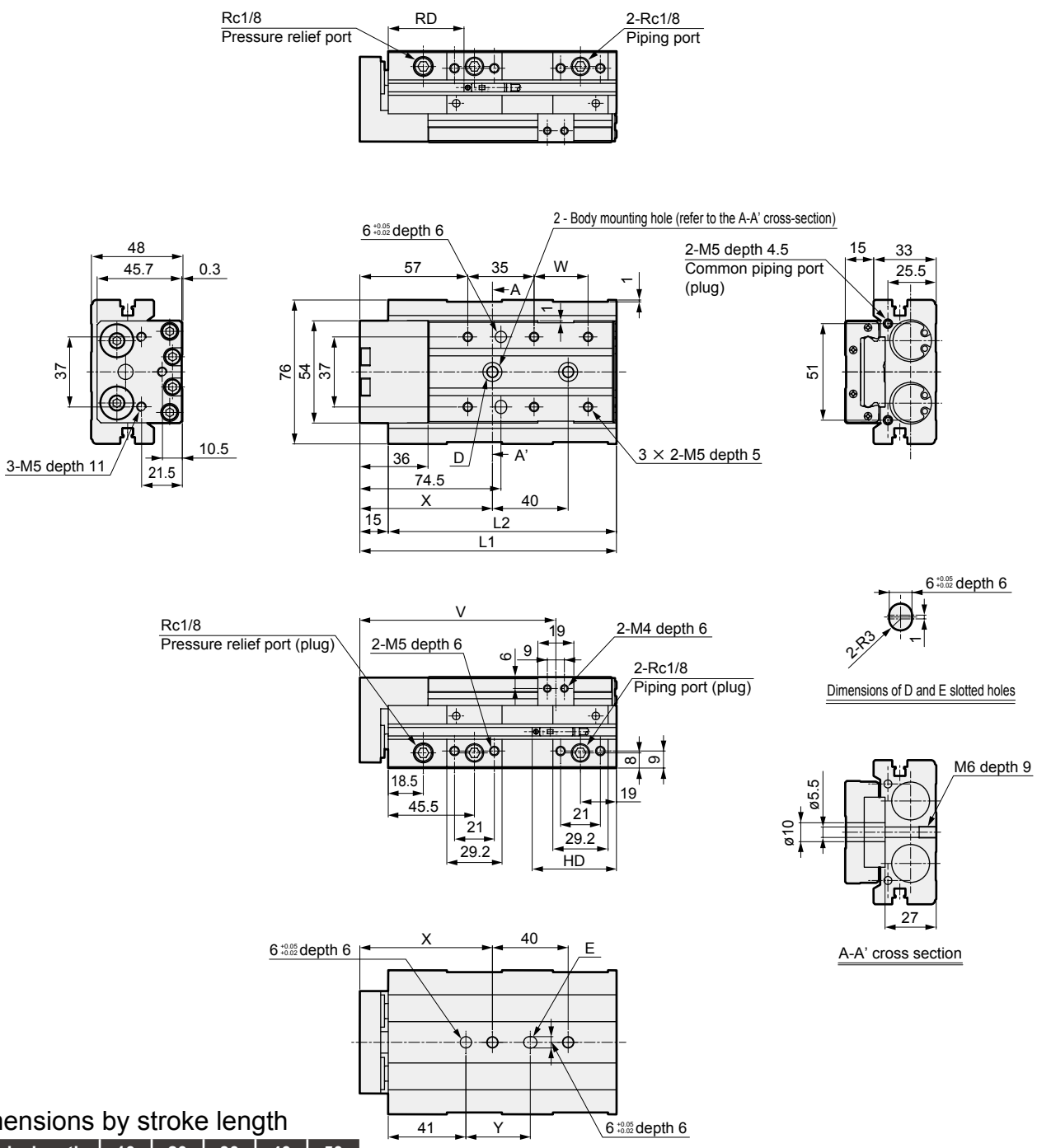

Dimensions by stroke length

Stroke length		10	20	30	40	50
L1		135.5			145.5	155.5
L2		120.5			130.5	140.5
V		103.5			113.5	123.5
W		28.5			38.5	48.5
X		70			76	74
Y		34			40	38
T0*/T5*	RD	41				
T2*/T3*	HD	69.5	59.5	49.5		
T2W*/T3W*	RD	43.5				
	HD	67	57	47		

* The same dimensions apply to the anti-rust (U).

*1 : When using a positioning hole, use a pin of dimensions that do not require press fitting.
The recommended tolerance of a pin is JIS tolerance m6 or less.

*2 : When using rear piping, refer to the cautions of 1. Common; when piping on page 196.

LCM
LCR
LCG
LCW
LCX
STM
STG
STS/STL
STR2
UCA2
ULK*
JSK/M2
JSG
JSC3/JSC4
USSD
UFCD
USC
UB
JSB3
LMB
LML
HCM
HCA
LBC
CAC4
UCAC2
CAC-N
UCAC-N
RCS2
RCC2
PCC
SHC
MCP
GLC
MFC
BBS
RRC
GRC
RV3*
NHS
HRL
LN
Hand
Chuk
MecHnd/Chuk
ShkAbs
FJ
FK
SpdContr
Ending

Dimensions (bore size: ø20)

● LCG-20-P7*

Stroke length: 75, 100, 125, 150
(Body mounting hole in the figure shows 100 mm stroke length)

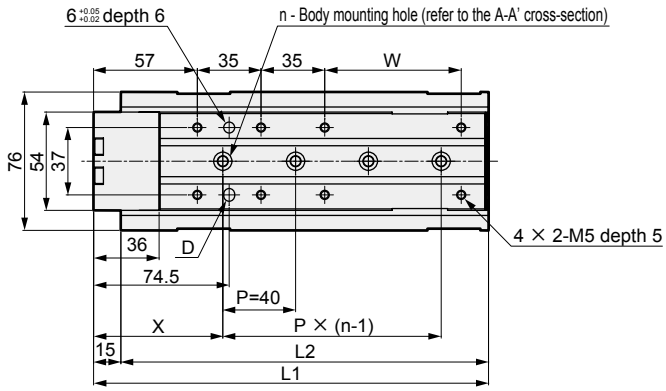

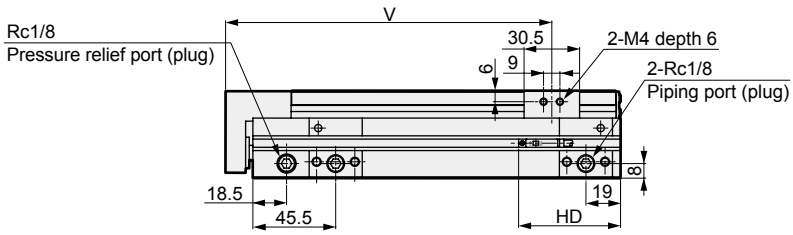

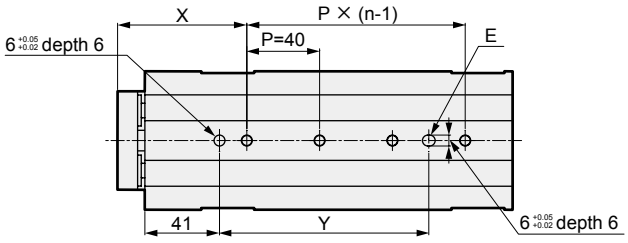

Dimensions by stroke length

Stroke length		75	100	125	150
L1		192	217	242	267
L2		177	202	227	252
n		3	4		5
V		154.3	179.3	204.3	229.3
W		50	75	100	125
X		71		78	76
Y		75	115	122	160
T0*/T5*	RD	41			
T2*/T3*	HD	61			
T2W*/T3W*	RD	43.5			
	HD	58.5			

* The same dimensions apply to the anti-rust (U).

*1 : When using a positioning hole, use a pin of dimensions that do not require press fitting.
The recommended tolerance of a pin is JIS tolerance m6 or less.

*2 : When using rear piping, refer to the cautions of 1. Common; when piping on page 196.

LCM
LCR
LCG
LCW
LCX
STM
STG
STS/STL
STR2
UCA2
ULK*
JSK/M2
JSG
JSC3/JSC4
USSD
UFCD
USC
UB
JSB3
LMB
LML
HCM
HCA
LBC
CAC4
UCAC2
CAC-N
UCAC-N
RCS2
RCC2
PCC
SHC
MCP
GLC
MFC
BBS
RRC
GRC
RV3*
NHS
HRL
LN
Hand
Chuk
MecHnd/Chuk
ShkAbs
FJ
FK
SpdContr
Ending

Dimensions (bore size: ø25)

● LCG-25-P7*

Stroke: 10, 20, 30, 40, 50
(Body mounting hole in the figure shows 30 mm stroke length)

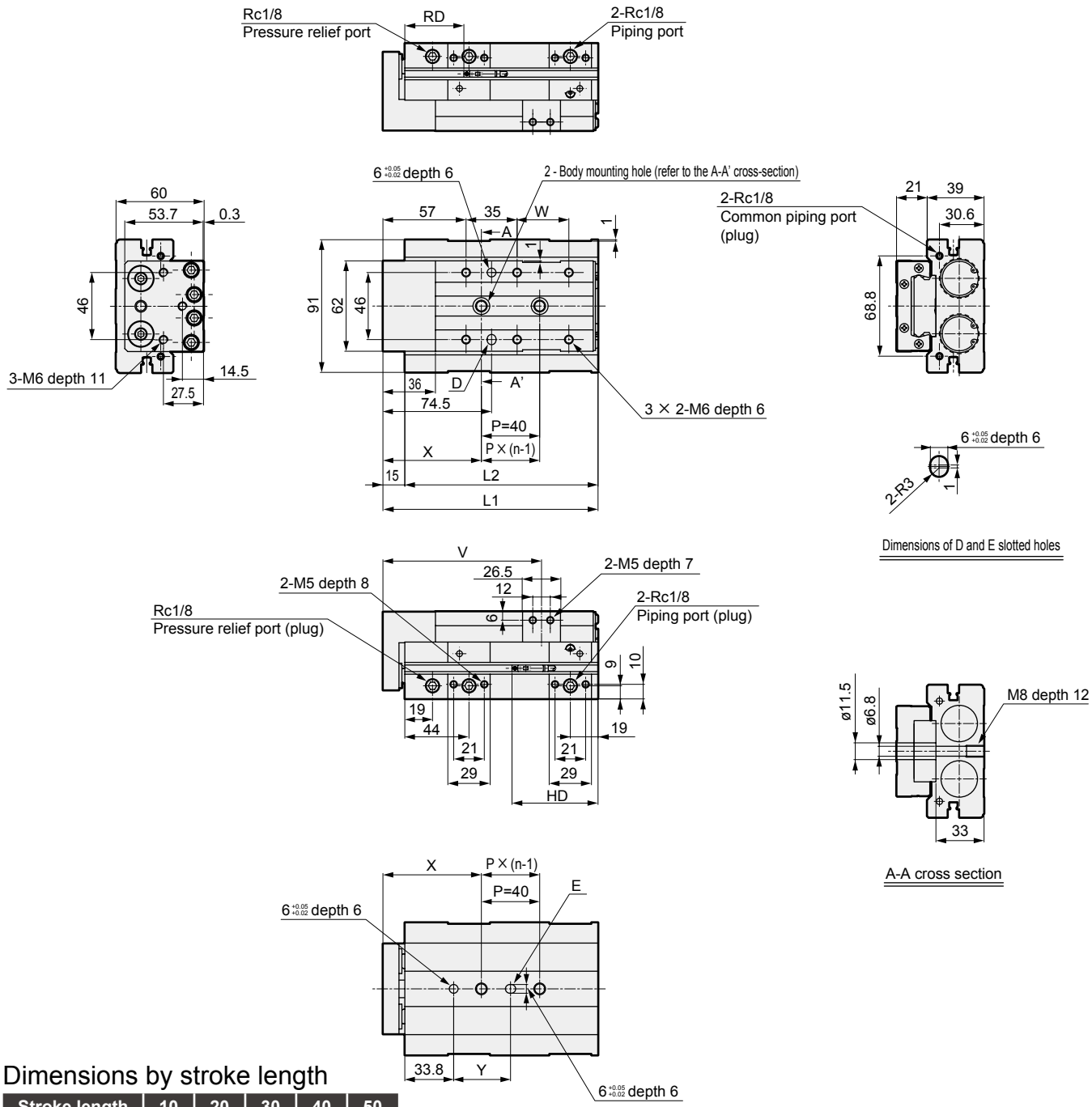

Dimensions by stroke length

Stroke length		10	20	30	40	50
L1		147.5			157.5	167.5
L2		132.5			142.5	152.5
n		2			3	2
V		108.8			118.8	128.8
W		35.5			45.5	55.5
X		67.5			70.5	85.5
Y		39			42	57
T0*/T5*	RD	43.5				
T2*/T3*	HD	79	69	59		
T2W*/T3W*	RD	46				
	HD	76.5	66.5	56.5		

* The same dimensions apply to the anti-rust (U).

*1 : When using a positioning hole, use a pin of dimensions that do not require press fitting.
The recommended tolerance of a pin is JIS tolerance m6 or less.

*2 : When using rear piping, refer to the cautions of 1. Common; when piping on page 196.

LCM
LCR
LCG
LCW
LCX
STM
STG
STS/STL
STR2
UCA2
ULK*
JSK/M2
JSG
JSC3/JSC4
USSD
UFCD
USC
UB
JSB3
LMB
LML
HCM
HCA
LBC
CAC4
UCAC2
CAC-N
UCAC-N
RCS2
RCC2
PCC
SHC
MCP
GLC
MFC
BBS
RRC
GRC
RV3*
NHS
HRL
LN
Hand
Chuk
MecHnd/Chuk
ShkAbs
FJ
FK
SpdContr
Ending

Dimensions (bore size: ø25)

● LCG-25-P7*

Stroke length: 75, 100, 125, 150
(Body mounting hole in the figure shows 100 mm stroke length)

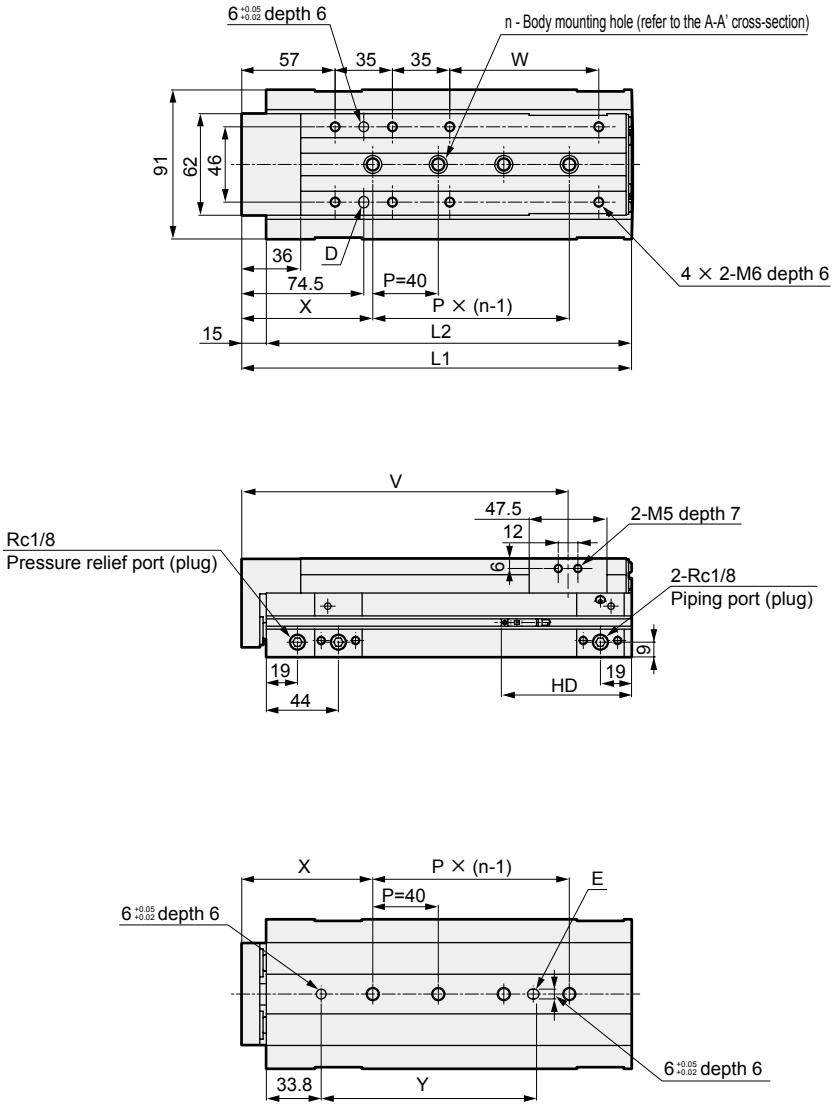

Dimensions by stroke length

Stroke length		75	100	125	150
L1		213	238	263	288
L2		198	223	248	273
n		3	4	5	
V		163.8	188.8	213.8	238.8
W		66	91	116	141
X		85	80	70	85
Y		96.5	131.5	161.5	176.5
T0*/T5*	RD	43.5			
T2*/T3*	HD	79.5			
T2W*/T3W*	RD	46			
	HD	77			

* The same dimensions apply to the anti-rust (U).

*1 : When using a positioning hole, use a pin of dimensions that do not require press fitting.
The recommended tolerance of a pin is JIS tolerance m6 or less.

*2 : When using rear piping, refer to the cautions of 1. Common; when piping on page 196.

LCM
LCR
LCG
LCW
LCX
STM
STG
STS/STL
STR2
UCA2
ULK*
JSK/M2
JSG
JSC3/JSC4
USSD
UFCD
USC
UB
JSB3
LMB
LML
HCM
HCA
LBC
CAC4
UCAC2
CAC-N
UCAC-N
RCS2
RCC2
PCC
SHC
MCP
GLC
MFC
BBS
RRC
GRC
RV3*
NHS
HRL
LN
Hand
Chuk
MecHnd/Chuk
ShkAbs
FJ
FK
SpdContr
Ending

STEP 1

❶ Calculate the load and the moment of impact occurring at the stroke end in different directions.

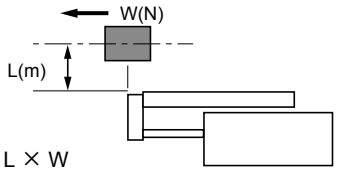

M1' = L × W

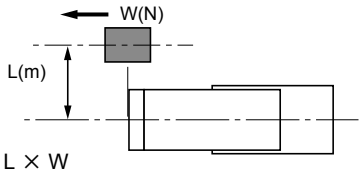

M3' = L × W

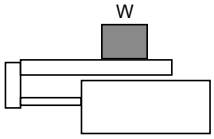

W' = W

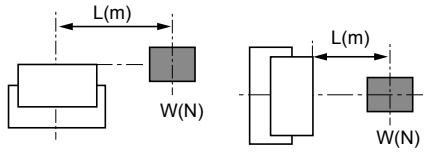

M2' = L × W

Obtain an approximate G coefficient in [Table 1].

[Table 1] Va (average speed) = $\frac{\text{Travel distance}}{\text{Travel time}}$ (m/s)

Va Average speed (m/s)	Vm Stroke end speed (m/s)	G coefficient
to 0.07	to 0.1	5
to 0.2	to 0.3	14
to 0.27	to 0.4	19
to 0.35	to 0.5	24

G Coefficient = ☐

M1' x G = ☐ (N·m)

M2' = ☐ (N·m)

M3' x G = ☐ (N·m)

W' = ☐ (N)

$E' = \frac{1}{2} \times (m + m_\alpha) \times Vm^2$

= ☐ (J)

$(m \approx \frac{W}{9.8})$

❷ Select a temporary bore size that satisfies the following formula.

$$M'_T = \frac{M1' \times G}{M1'max} + \frac{M2'}{M2'max} + \frac{M3' \times G}{M3'max} + \frac{W'}{W'max} < 1$$

$E' < E\ max$

M'_T : Resultant moment (must be smaller than 1)

G : G coefficient

W'max : Max. allowable value of W' (from Table 2)

M1'max : Max. allowable value of M1' (from Table 2)

M2'max : Max. allowable value of M2' (from Table 2)

M3'max : Max. allowable value of M3' (from Table 2)

E max : Max. allowable value of E_0 (from Table 3)

m_α : Table weight (from Table 4)

[Table 2] Allowable static load

Bore size	Stroke length (mm)	Vertical load W'max (N)	Bending moment M1'max (N·m)	Radial moment M2'max (N·m)	Torsion moment M3'max (N·m)
ø6	10 to 30	140	1.7	4.0	1.7
	40 to 50	186	10.7	6.0	10.7
ø8	10 to 30	152	3.4	6.8	3.4
	40 to 75	230	13.8	10.3	13.8
ø12	10 to 50	220.8	5.7	15.2	5.7
	75 to 100		22.2	21.0	22.2
ø16	10 to 50	380.8	17.8	36.0	17.8
	75 to 125		37.3	40.0	37.3
ø20	10 to 50	548.8	31.1	60.3	31.1
	75 to 150		56.2	61.6	56.2
ø25	10 to 50	961.5	65.1	131.8	65.1
	75 to 150		127.5	132.0	127.5

Note: When attaching a load to the end plate, even if selecting long stroke length (ø6, 8: 40 or more, ø12 or more: 75 or more), calculate the allowable values with short stroke length (ø6, 8: 30 or less, ø12 or more: 50 or less).

[Table 3] LCG allowable absorbed energy (E_0)

Bore size	Standard (J)	With stroke adjusting stopper (J)	With shock absorber stopper (J)
ø6	0.025	0.0032	0.14
ø8	0.058	0.0032	0.25
ø12	0.112	0.014	0.25
ø16	0.176	0.043	0.65
ø20	0.314	0.055	1.3
ø25	0.314	0.14	1.3

[Table 4] Table weight (Unit: kg)

Bore size	Stroke length (mm)									P72/P73 added	B/BL added
	10	20	30	40	50	75	100	125	150		
ø6	0.060	0.060	0.070	0.085	0.095	-	-	-	-	0.005	0.030
ø8	0.080	0.080	0.090	0.110	0.125	0.150	-	-	-	0.015	0.030
ø12	0.210	0.210	0.210	0.235	0.260	0.335	0.400	-	-	0.025	0.060
ø16	0.315	0.315	0.315	0.350	0.380	0.515	0.595	0.680	-	0.035	0.070
ø20	0.475	0.475	0.475	0.520	0.565	0.715	0.820	0.930	1.035	0.045	0.140
ø25	0.785	0.785	0.785	0.845	0.915	1.200	1.360	1.515	1.680	0.075	0.310

STEP 2

Next, obtain a more accurate load factor, effective thrust, stroke end speed and resultant moment.

● Calculate the load factor.

$$\alpha = \frac{F_0}{F} \times 100\ [\%]$$

α : Load factor

F_0 : Force (N) required to move the workpiece

F : Cylinder theoretical thrust (N) [Table 5]

For horizontal operation	For vertical operation
$F_0 = F_W$	$F_0 = W+FW$
FW: W x 0.2 Note (N)	
W: Load (N)	

Note: Coefficient of friction

[Table 5] Theoretical thrust table (Unit: N)

Bore size (mm)	Operating direction	Working pressure MPa						
		0.15	0.2	0.3	0.4	0.5	0.6	0.7
ø6	PUSH	8	11	17	23	28	34	40
	PULL	6	8	13	17	21	25	30
ø8	PUSH	15	20	30	40	50	60	70
	PULL	11	15	23	30	38	45	53
ø12	PUSH	34	45	68	90	113	136	158
	PULL	25	34	51	68	85	102	119
ø16	PUSH	60	80	121	161	201	241	281
	PULL	52	69	104	138	173	207	242
ø20	PUSH	94	126	188	251	314	377	440
	PULL	79	106	158	211	264	317	369
ø25	PUSH	147	196	295	393	491	589	687
	PULL	124	165	247	330	412	495	577

[Table 6] Load factor guidelines

Working pressure MPa	Load factor (%)
0.2 to 0.3	α ≤ 40
0.3 to 0.6	α ≤ 50
0.6 to 0.7	α ≤ 60

STEP 3

Obtain the stroke end speed (Vm) and G coefficient from the average speed (Va) and load factor obtained in STEP 2.

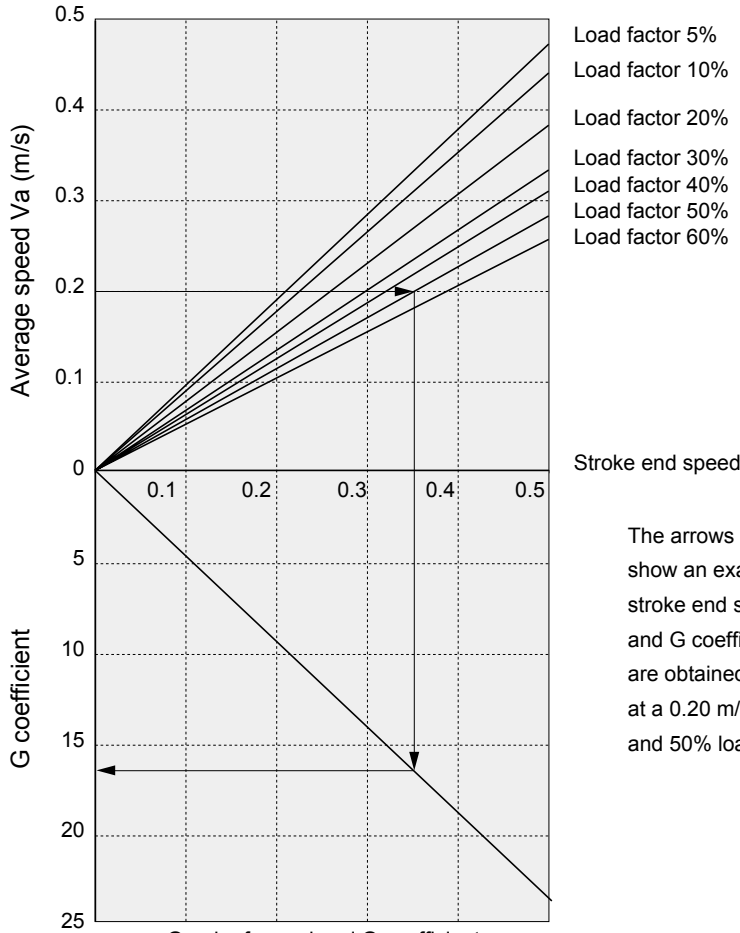

The arrows (→) in the figure show an example in which stroke end speed of 0.35 m/s and G coefficient of 16.8 are obtained at a 0.20 m/s average speed and 50% load factor.

Graph of speed and G coefficient
G coefficient = ☐

LCM
LCR
LCG
LCW
LCX
STM
STG
STS/STL
STR2
UCA2
ULK*
JSK/M2
JSG
JSC3/JSC4
USSD
UFCD
USC
UB
JSB3
LMB
LML
HCM
HCA
LBC
CAC4
UCAC2
CAC-N
UCAC-N
RCS2
RCC2
PCC
SHC
MCP
GLC
MFC
BBS
RRC
GRC
RV3*
NHS
HRL
LN
Hand
Chuk
MecHnd/Chuk
ShkAbs
FJ
FK
SpdContr
Ending

STEP 4

Calculate the resultant moment (M_T) from the G coefficient and stroke end speed (Vm) obtained in STEP 3.

M1' x G = ☐ (N·m)

M2' = ☐ (N·m)

M3' x G = ☐ (N·m)

W' = ☐ (N)

$$M'_T = \frac{M1' \times G}{M1'max} + \frac{M2'}{M2'max} + \frac{M3' \times G}{M3'max} + \frac{W'}{W'max} = \square$$

Obtain M_T (resultant moment during movement). (Note that it differs from that obtained in STEP 1.)

● Vertical load: W (N)

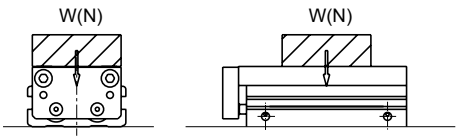

● Bending moment: M1 (N·m)

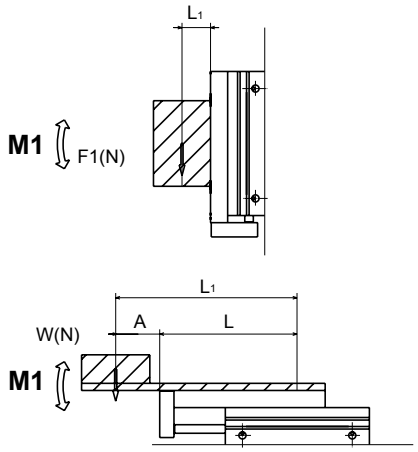

$M1=F1 \times L_1$

$M1=W \times L_1$
$L_1=A+L$
L is value in table below

● Radial moment: M2 (N·m)

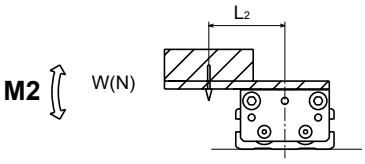

$M2=W \times L_2$

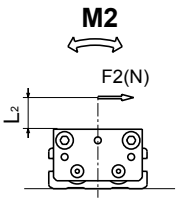

$M2=F2 \times L_2$

● Torsion moment: M3 (N·m)

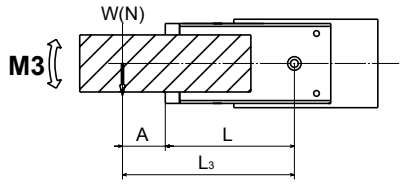

$M3=W \times L_3$
$L_3=A+L$
L is value in table below

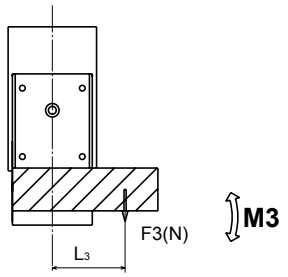

$M3=F3 \times L_3$

L value

Unit (m)

Bore size	Stroke length									P72/P73 added	B/BL added
	10	20	30	40	50	75	100	125	150		
ø6	0.039	0.0415	0.049	0.0615	0.069	-	-	-	-	0.012	0.0165
ø8	0.0395	0.042	0.0495	0.0615	0.069	0.088	-	-	-	0.020	0.0145
ø12	0.053	0.0555	0.058	0.0655	0.073	0.096	0.115	-	-	0.020	0.018
ø16	0.0555	0.058	0.0605	0.068	0.0755	0.1025	0.1215	0.140	-	0.020	0.019
ø20	0.0635	0.066	0.0685	0.076	0.0835	0.108	0.127	0.1455	0.1645	0.025	0.020
ø25	0.0695	0.072	0.0745	0.082	0.0895	0.1185	0.1375	0.156	0.175	0.025	0.023

M1=M1 = ☐ (N·m)

M2=M2 = ☐ (N·m)

M3=M3 = ☐ (N·m)

W=W = ☐ (N)

$$M_T = \frac{M1}{M1max} + \frac{M2}{M2max} + \frac{M3}{M3max} + \frac{W}{Wmax} = \square$$

M_T : Synthesis of moment

Wmax : Max. allowable value of W (from Table 7)

M1max : Max. allowable value of M1 (from Table 7)

M2max : Max. allowable value of M2 (from Table 7)

M3max : Max. allowable value of M3 (from Table 7)

E max : Max. allowable value of E_0 (from Table 3)

[Table 7] Allowable running load

Bore size	Stroke length (mm)	Vertical load Wmax (N)	Bending moment M1max (N·m)	Radial moment M2max (N·m)	Torsion moment M3max (N·m)
ø6	10 to 30	14	0.17	0.40	0.17
	40 to 50	15.5	0.89	0.50	0.89
ø8	10 to 30	15.2	0.34	0.68	0.34
	40 to 75	19.2	1.1	0.86	1.1
ø12	10 to 50	27.6	0.71	1.9	0.71
	75 to 100		2.2	2.1	2.2
ø16	10 to 50	47.6	1.9	4.0	1.9
	75 to 125		4.6	5.0	4.6
ø20	10 to 50	68.6	3.4	6.7	3.4
	75 to 150		7.0	7.7	7.0
ø25	10 to 50	128.2	7.6	15.5	7.6
	75 to 150		17.0	17.6	17.0

Note: When attaching a load to the end plate, even if selecting long stroke length (ø6, 8: 40 or more, ø12 or more: 75 or more), calculate the allowable values with short stroke length (ø6, 8: 30 or less, ø12 or more: 50 or less).

Confirm M_T, $M'_T \leq 1$.

↓

Bore size is decided.

↓

øA

STEP 5

Confirming allowable absorbed energy

$$E = \frac{1}{2} \times (m + m_\alpha) \times Vm^2$$

E : Kinetic energy at workpiece end (J)

m : Load weight (kg) ($m \approx \frac{W(N)}{9.8}$)

m_α : Table weight (from Table 4)

Vm : Stroke end speed (m/s)

E max : Max. allowable value of E_0 (from Table 3)

Confirm E ≤ E max.

↓

Bore size is decided.

↓

øB

STEP 6

Bore size decided in STEP 4
(load conditions)

øA

Bore size decided in STEP 5
(allowable absorbed energy)

øB

øA < øB → øB Select.

or → øA and external damper are used together or a shock absorber stopper is attached.

øA>øB → øA Select.

LCM
LCR
LCG
LCW
LCX
STM
STG
STS/STL
STR2
UCA2
ULK*
JSK/M2
JSG
JSC3/JSC4
USSD
UFCD
USC
UB
JSB3
LMB
LML
HCM
HCA
LBC
CAC4
UCAC2
CAC-N
UCAC-N
RCS2
RCC2
PCC
SHC
MCP
GLC
MFC
BBS
RRC
GRC
RV3*
NHS
HRL
LN
Hand
Chuk
MecHnd/Chuk
ShkAbs
FJ
FK
SpdContr
Ending

Selection confirmation graph of shock absorber stopper

1. This is a simplified confirmation graph for shock absorber stoppers. The area inside the graph is the usable range. Select a bore size for shock absorber mounting within the usable range.
2. Simplified selection graph lists the pneumatic pressure value used for the cylinder at 0.5 MPa.
3. The absorbed energy of the shock absorber varies depending on the temperature. The simplified confirmation graph lists the value at room temperature.
4. Colliding object weight is the sum of load weight m and table weight ma.

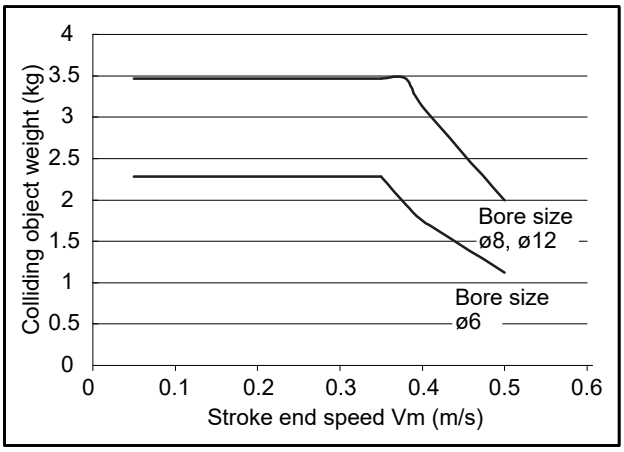

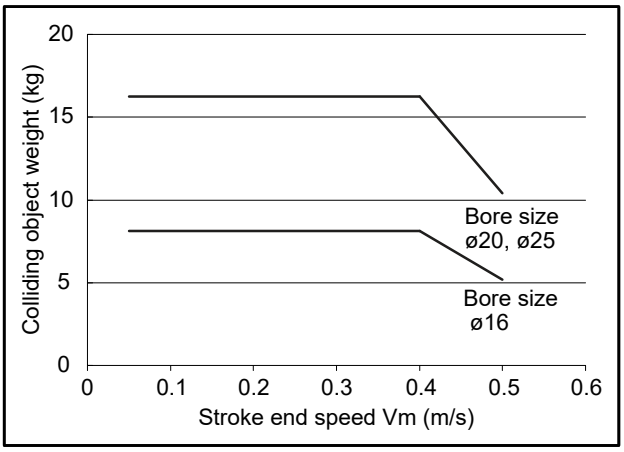

LCM
LCR
LCG
LCW
LCX
STM
STG
STS/STL
STR2
UCA2
ULK*
JSK/M2
JSG
JSC3/JSC4
USSD
UFCD
USC
UB
JSB3
LMB
LML
HCM
HCA
LBC
CAC4
UCAC2
CAC-N
UCAC-N
RCS2
RCC2
PCC
SHC
MCP
GLC
MFC
BBS
RRC
GRC
RV3*
NHS
HRL
LN
Hand
Chuk
MecHnd/Chuk
ShkAbs
FJ
FK
SpdContr
Ending

Displacement at point A

[Displacement of table due to M1 moment]

Displacement at the table end when load (F1) is applied to the table end

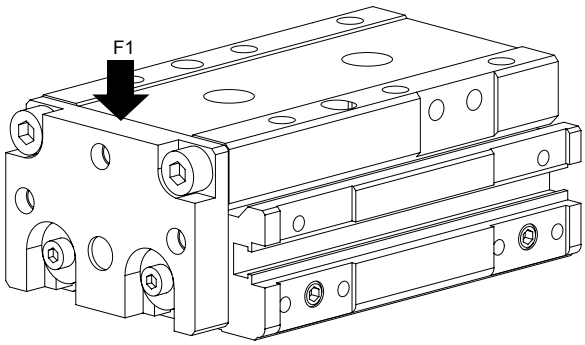

LCG-6(M1)

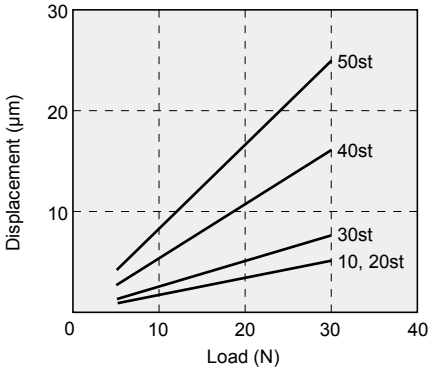

LCG-8(M1)

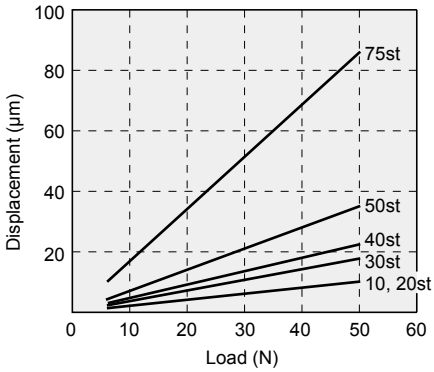

LCG-12(M1)

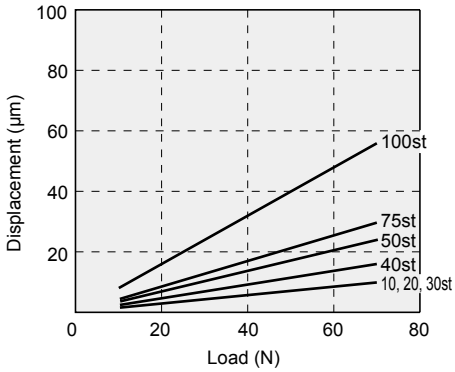

LCG-16(M1)

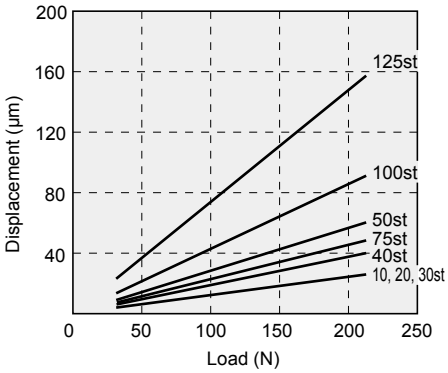

LCG-20(M1)

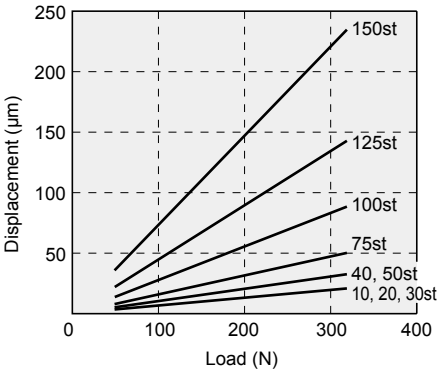

LCG-25(M1)

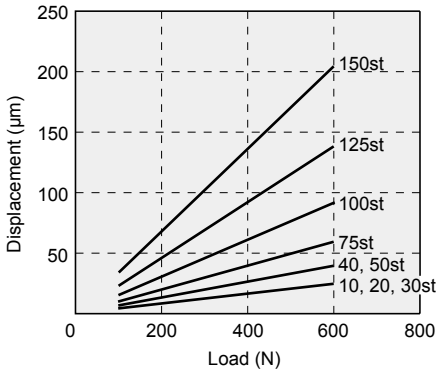

Technical data ❶ Displacement at the table end (reference value)

LCM
LCR
LCG
LCW
LCX
STM
STG
STS/STL
STR2
UCA2
ULK*
JSK/M2
JSG
JSC3/JSC4
USSD
UFCD
USC
UB
JSB3
LMB
LML
HCM
HCA
LBC
CAC4
UCAC2
CAC-N
UCAC-N
RCS2
RCC2
PCC
SHC
MCP
GLC
MFC
BBS
RRC
GRC
RV3*
NHS
HRL
LN
Hand
Chuk
MecHnd/Chuk
ShkAbs
FJ
FK
SpdContr
Ending

Displacement at point A

[Displacement of table due to M2 moment]

Displacement at the table end (point A) when load (F2) is applied to a point L mm away from the center of the cylinder

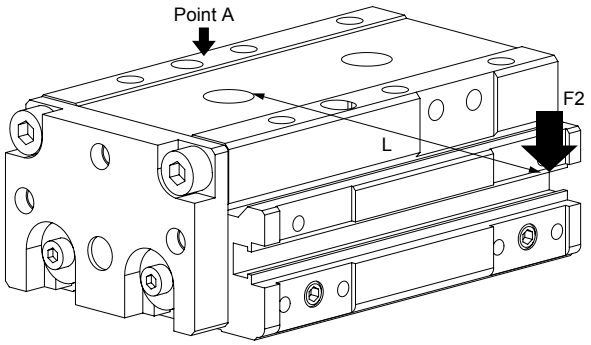

L value
ø 6: L= 70, ø 8: L= 70
ø12: L= 90, ø16: L=100
ø20: L=100, ø25: L=200

LCG-6(M2)

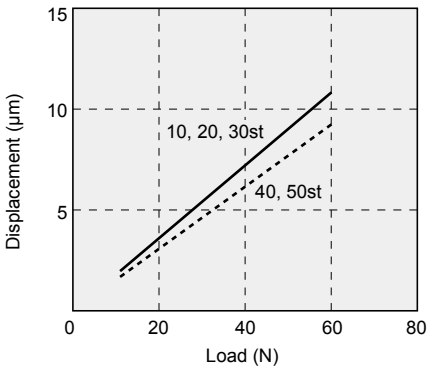

LCG-8(M2)

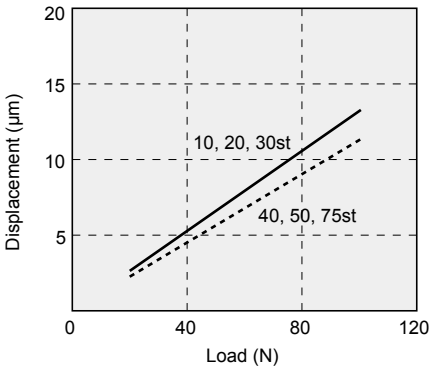

LCG-12(M2)

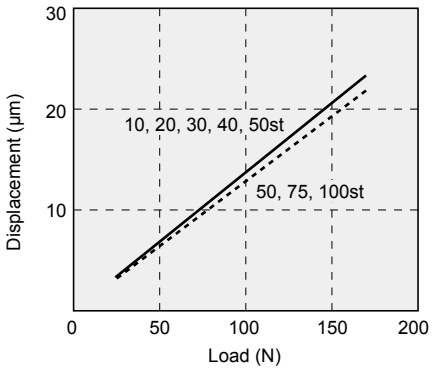

LCG-16(M2)

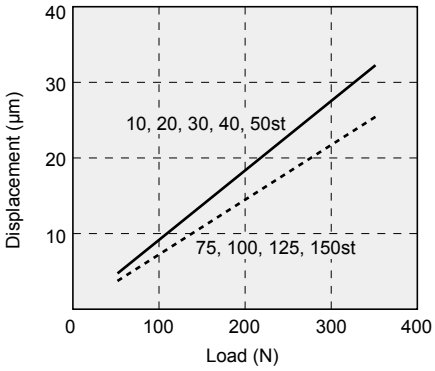

LCG-20(M2)

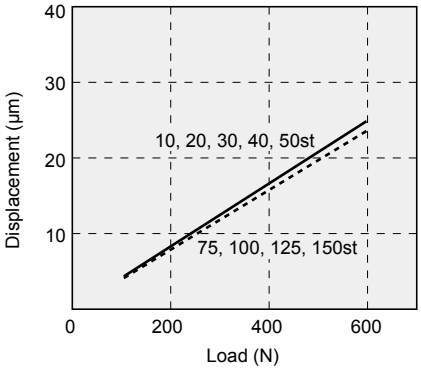

LCG-25(M2)

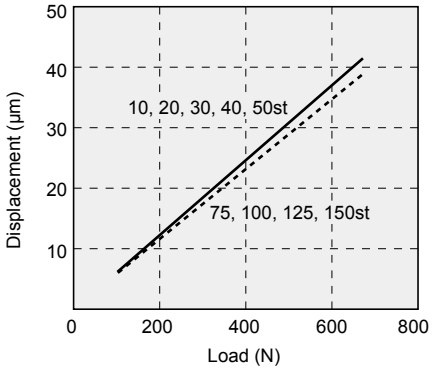

LCM
LCR
LCG
LCW
LCX
STM
STG
STS/STL
STR2
UCA2
ULK*
JSK/M2
JSG
JSC3/JSC4
USSD
UFCD
USC
UB
JSB3
LMB
LML
HCM
HCA
LBC
CAC4
UCAC2
CAC-N
UCAC-N
RCS2
RCC2
PCC
SHC
MCP
GLC
MFC
BBS
RRC
GRC
RV3*
NHS
HRL
LN
Hand
Chuk
MecHnd/Chuk
ShkAbs
FJ
FK
SpdContr
Ending

Displacement at point A

[Displacement of table due to M3 moment]

Displacement angle of the table when rotation moment (M3) is applied to the cylinder

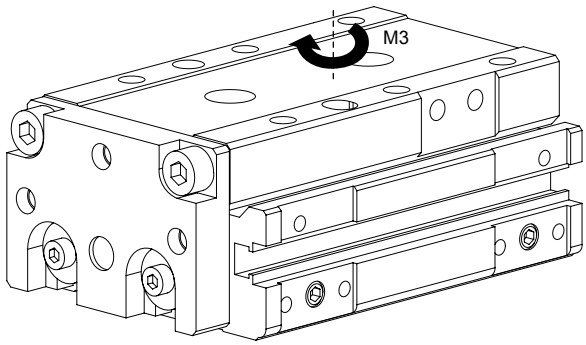

LCG-6(M3)

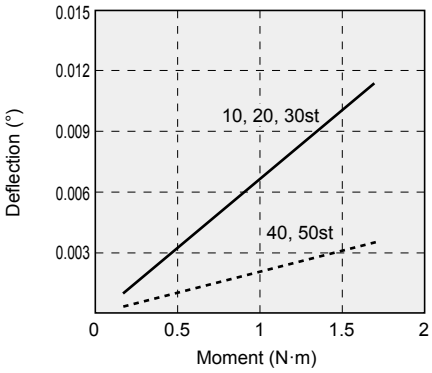

LCG-8(M3)

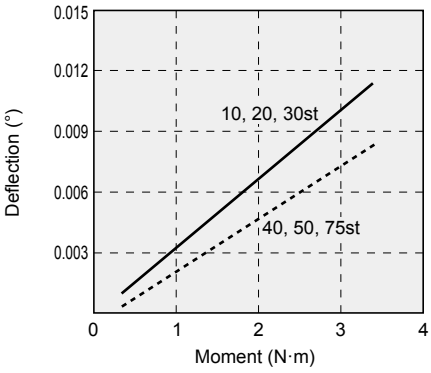

LCG-12(M3)

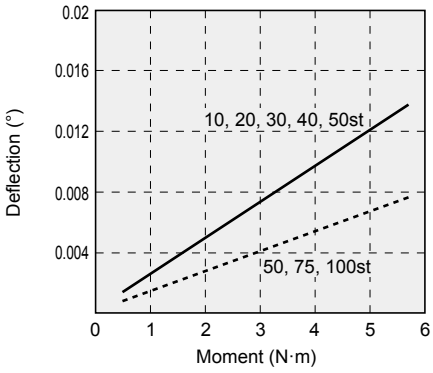

LCG-16(M3)

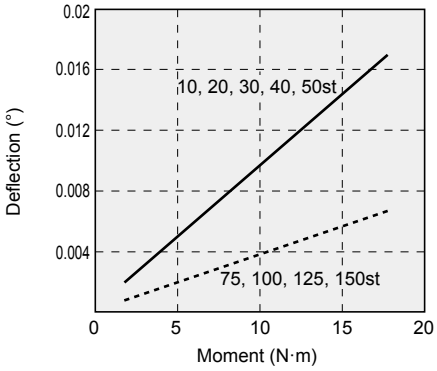

LCG-20(M3)

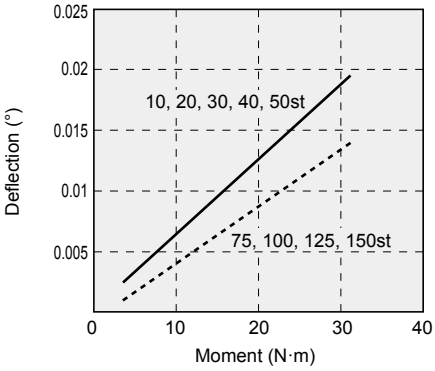

LCG-25(M3)

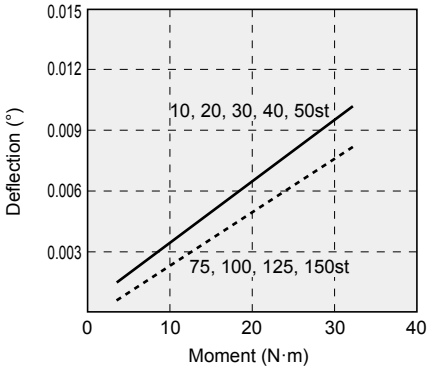

Pneumatic components

Safety Precautions

Be sure to read this section before use.

Refer to Intro Page 73 for general information of the cylinder, and to Intro Page 80 for general information of the cylinder switch.

Product-specific cautions: Linear slide cylinder LCG Series

Design/selection

1. Common

CAUTION

■ When selecting the cylinder, follow the "LCG Selection guide" on pages 188 to 192.

■ Protect the cylinder with a cover to prevent damage and malfunction in a place where it is exposed to dripping water or oil, corrosive conditions or much dust.

■ Precautions for type with switch

- When using the T□V switch with a stroke adjusting stopper (S3**/S4**/S5**/S6**) or shock absorber stopper (A3**/A4**/A5**/A6**), install the switch on the opposite side to the stopper. Otherwise the switch on the head side will make contact with the stopper.
- Be careful of the lead wire direction when designing the 30 mm or less stroke length, since a switch is installed in each groove of the body.

■ Putting a strong magnet close to the product may cause magnetization of the table, which may result in accidental operation of the switch.

2. Position locking LCG-Q

CAUTION

■ Do not use 3-position valves.

Avoid using the cylinder in combination with 3-position (especially closed center metal seal) valves. If the port at the side where the lock mechanism is provided is pressurized, the lock cannot be engaged. Even if it is locked once, the air leaked from the valve enters the cylinder, and the lock may be released after a certain period of time.

Mounting, installation and adjustment

1. Common; when piping

CAUTION

■ Apply adhesive to the M3 and M5 plugs (hexagon socket set screws) when changing the piping port position. (Low strength adhesives such as LOCTITE 222/221 or ThreeBond 1344 are recommended)

■ Piping port position and operating direction

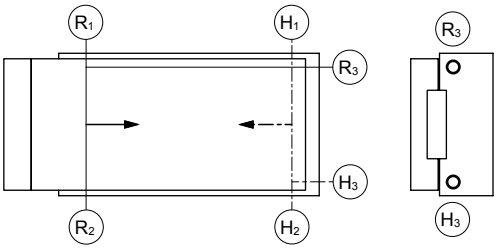

Ⓡ shows the rod side pressurizing port and Ⓗ the head side pressurizing port. When the product is shipped from the factory, ports other than R_1 and H_1 (R_2 and H_2 depending on the stopper position when a stopper is attached) are sealed with plugs.

■ Rear piping

Rear piping (ports R_2 and H_3 in the figure above) is possible except for the position locking. Remove the plugs sealing ports R_3 and H_3 and seal ports R_1 and H_1 with the plugs shown in the table on the right.

Item	Plug
LCG-6	Seal the R_1 and H_1 ports with the plugs removed from the R_3, H_3 ports.
LCG-8	M5 x 5 (Hexagon socket set screw)
LCG-12	
LCG-16	
LCG-20	R 1/8 (Hexagon socket head cap taper thread plug)
LCG-25	Seal the R_1 and H_1 ports with the plugs removed from the R_3, H_3 ports.

Prepare two separate plugs shown in the table above for ø8 to 20.

■ Precautions for piping fittings

Be sure to attach a speed controller during piping before use. The available fittings are as below.

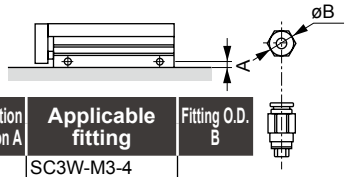

Item / Bore size (mm)	Port size	Port position dimension A	Applicable fitting	Fitting O.D. B
ø6	M3	4	SC3W-M3-4 SC3U-M3-4 SC3W-M3-3.2 SC3U-M3-3.2 GWS3-M3-S GWS4-M3-S	ø8 or less
ø8	M5	5.5	SC3W-M5-4 SC3W-M5-6 GWS4-M5-S GWS4-M5	ø11 or less
ø12		5.5		
ø16		6.5	SC3W-M5-4 SC3W-M5-6 GWS4-M5-S GWS4-M5 GWL4-M5 GWL6-M5 GWS6-M5	ø13 or less
ø20	Rc1/8	8	SC3W-6-4,6,8 GWS4-6 GWS8-6 GWL6-6 GWS6-6 GWL4-6	ø15 or less
ø25		9		

Mounting, installation and adjustment

2. Common; when installing

⚠ CAUTION

■ Do not damage the surface flatness by denting or scratching the body (tube) mounting surface or the table surface.
In addition, make sure that the flatness of the mating surface for body and table mounting is 0.02 mm or less.

■ Observe the following bolt insertion lengths and tightening torque when mounting the body.
[Fig. 1]

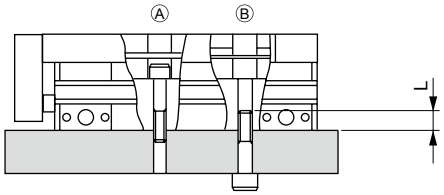

Item	Ⓐ		Ⓑ		
	Bolt used	Tightening torque (N·m)	Bolt used	Tightening torque (N·m)	Max. insertion L (mm)
LCG-6	M3×0.5	0.6 to 1.1	M4×0.7	1.4 to 2.4	6
LCG-8	M3×0.5	0.6 to 1.1	M4×0.7	1.4 to 2.4	6
LCG-12	M4×0.7	1.4 to 2.4	M5×0.8	2.9 to 5.1	8
LCG-16	M5×0.8	2.9 to 5.1	M6×1.0	4.8 to 8.6	9
LCG-20	M5×0.8	2.9 to 5.1	M6×1.0	4.8 to 8.6	9
LCG-25	M6×1.0	4.8 to 8.6	M8×1.25	12.0 to 21.6	12

■ Observe the following bolt insertion lengths and tightening torque when installing the jig on the slide table or end plate.
[Fig. 2]

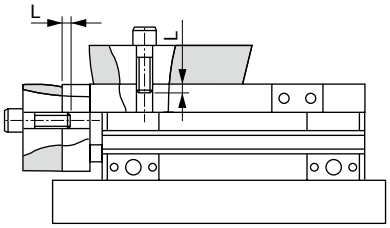

Item	Table		
	Bolt used	Tightening torque (N·m)	Max. insertion L (mm)
LCG-6	M3×0.5	0.6	3
LCG-8	M3×0.5	0.6	3
LCG-12	M4×0.7	1.4	4
LCG-16	M5×0.8	2.9	5
LCG-20	M5×0.8	2.9	5
LCG-25	M6×1.0	4.8	6

Item	End plate		
	Bolt used	Tightening torque (N·m)	Screw insertion L (mm)
LCG-6	M3×0.5	0.6	4.5 to 6
LCG-8	M3×0.5	0.6	4.5 to 7
LCG-12	M4×0.7	1.4	6 to 9
LCG-16	M5×0.8	2.9	7.5 to 9
LCG-20	M5×0.8	2.9	7.5 to 11
LCG-25	M6×1.0	4.8	9 to 11

■ Observe the following tightening torque of bolts and nuts of the stopper.
[Fig. A]

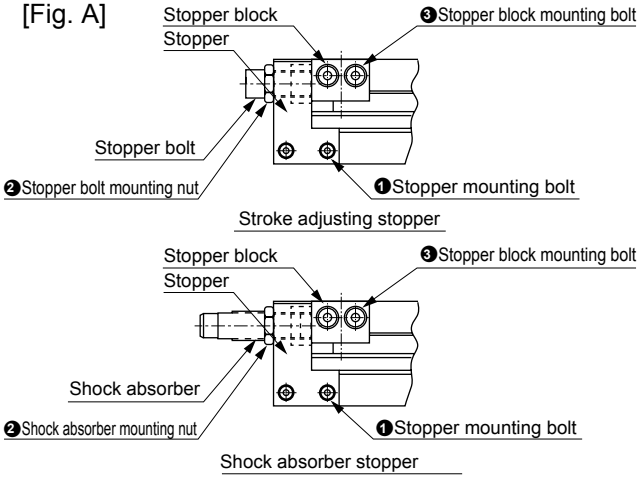

Model	❶Stopper mounting bolt (N·m)	❷Stopper bolt mounting nut ❷Shock absorber mounting nut (N·m)	❸Stopper block mounting bolt (N·m)
LCG-6	0.4 to 0.5	1.2 to 2.0	0.6 to 0.8
LCG-8	0.4 to 0.5	1.2 to 2.0	0.6 to 0.8
LCG-12	0.6 to 0.8	1.2 to 2.0	0.6 to 0.8
LCG-16	0.6 to 0.8	3.0 to 4.0	1.4 to 1.8
LCG-20	2.9 to 3.5	4.5 to 6.0	1.4 to 1.8
LCG-25	2.9 to 3.5	4.5 to 6.0	2.9 to 3.5

■ The cylinder switch may malfunction if there is a magnetic substance such as a metal plate installed adjacently. To ensure safe operation, keep it 10 mm and over away from the cylinder surface or change the installation surface of the cylinder switch.
(Common for all port sizes)

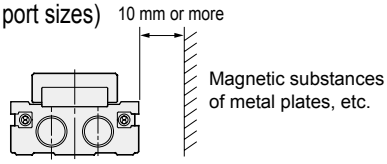

■ The cylinder switches may accidentally function if the cylinders are close to each other. Keep the distance below between the surfaces of the cylinders. (Common for all port sizes)

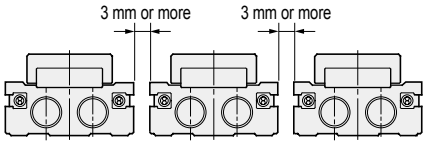

■ CKD's shock absorber is a repair part.
Replace it when the energy absorption performance has degraded or the operation is not smooth.

■ When using a positioning hole, use a pin of dimensions that do not require press fitting. If a pin is press fitted, the load of press fitting may damage or distort the linear guide, lowering the accuracy.
The recommended tolerance of a pin is JIS tolerance m6 or less.

3. Position locking LCG-Q

⚠ CAUTION

- The locking mechanism works at the stroke end. If the stopper is engaged on the way of the stroke by the external stopper, the locking mechanism may not work and the piston could fall. When setting a load, make sure to check that the lock mechanism functions before installing the product.
- Supply pressure equal to or higher than the min. working pressure to the port on the lock mechanism side.
- When the piping at the side where the lock mechanism is provided is long and thin, or when the speed controller is far away from the cylinder port, note that it takes time to engage the lock. Clogging in the silencer mounted on the EXH. port of the solenoid valve may also cause the same result.

4. With buffer LCG-B

- Depending on the speed and load, the buffer may function when operation is started, resulting in accidental operation of the switch. Adjust to an appropriate speed for the load before use.
- The type with buffer cannot be used vertically upward.

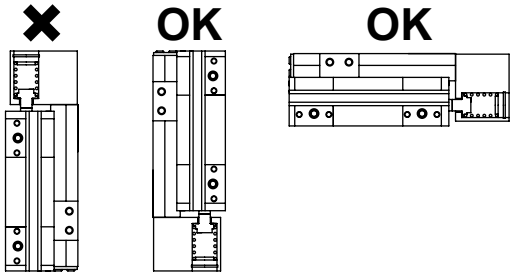

- Use a buffer of less than the buffer stroke length. Otherwise, malfunctions or damage may result.

Use/maintenance

1. Common

⚠ CAUTION

- Apply AFF grease (THK) to the guide rail surface after six months or when the number of operation cycles reaches one million, whichever comes first.
- Observe corrosion resistance of the table.
  The table is martensitic stainless steel (ø6 to ø16) or alloy steel (ø20 and ø25). It may rust in an environment where the temperature and humidity is high or condensation may occur on the product surface.

2. Position locking LCG-Q

⚠ WARNING

- If pressure is supplied to port Ⓐ when both ports are not pressurized and the piston is locked, the lock may not be released or the piston rod may suddenly pop out just after the lock is released. This can be extremely hazardous. To release the lock mechanism, make sure to supply pressure to port Ⓑ. Check that load is not applied to the lock mechanism.

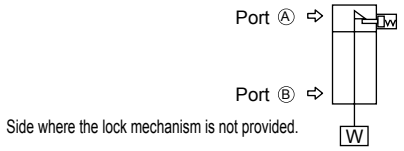

- For usage where the drop rate is increased using the quick exhaust valve, the lock may not release normally because the cylinder body starts operating before the lock pin. For the position locking cylinder, do not use the quick exhaust valve.

⚠ CAUTION

- If back pressure is applied to the locking mechanism, the lock may be released. Use a single solenoid valve, or an individual exhaust manifold.
- After the locking mechanism is manually operated, make sure to return the locking mechanism to the original state before use. Do not perform manual operation except for adjustment, as it is dangerous.
- When mounting or adjusting the cylinder, release the lock. If mounting work, etc., is done while the lock is engaged, the lock part may be damaged.
- Do not use multiple synchronized cylinders.
  Do not arrange so that 1 workpiece is moved by synchronizing 2 or more position locking cylinders. Lock release may fail for one of the cylinders.
- Use the speed controller with meter-out.
  If the meter-in control is used, the lock may not be able to be released.
- At the side where the lock mechanism is attached, be sure to use the cylinder from the stroke end.
  If the cylinder piston does not reach the stroke end, the lock may not be engaged or the lock may not be able to be released.
- How to unlock
  By screwing the hexagon socket head cap screw (M3 x 20) into the stopper piston and pulling the bolt 3 mm with force of 20 N or more, the stopper piston moves and the lock is released. (when horizontally installed with no load and with the rod port pressurized). When the screw is released, the internal spring returns the stopper piston. When the stopper piston fits in the piston rod groove, the cylinder is locked.

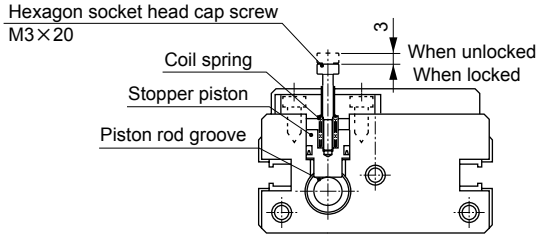

LCW

Linear slide cylinder

Combined functions cylinder

ø12/ø16/ø20

Overview

A basic model linear slide cylinder model featuring the specs most used by customers provided as standard.

CONTENTS

Product introduction	200
Series variation	202
● Double acting/single rod (LCW)	204
● Double acting/position locking (LCW-Q)	224
Selection guide	242
⚠Safety precautions	246

Basic model added

Specs most used by customers are provided as standard!
Selecting the model is easier

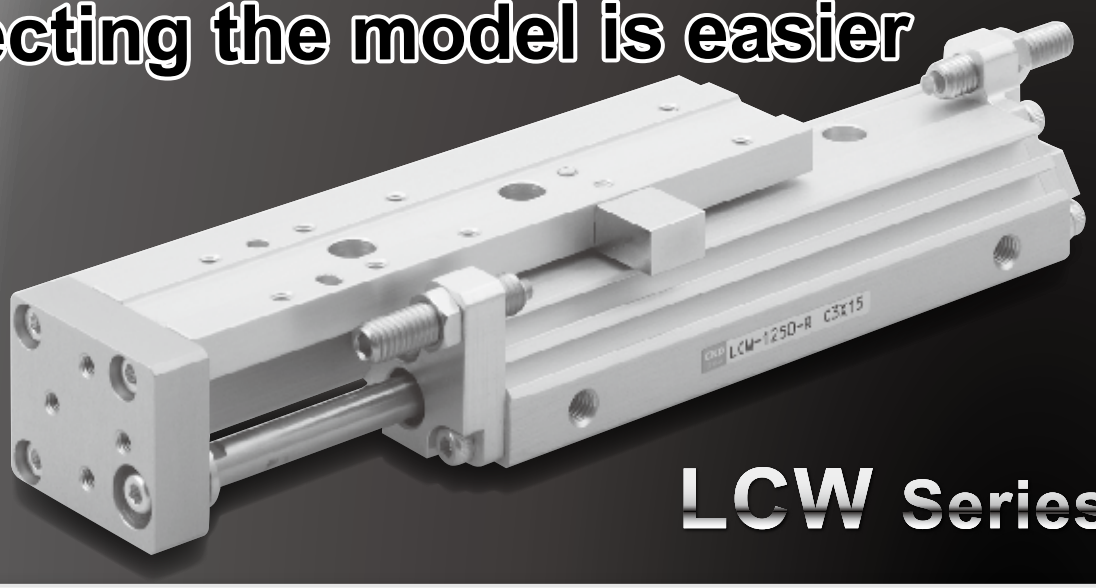

LCW Series

Three points for ease of selection

1. Combination of 3 bore sizes

ø12 | ø16 | ø20

A single piston is used.

(LCR ø8, ø12, ø16 equiv.)

2. Stroke length aggregated to 3 pitches

30 mm | 50 mm | 75 mm

3. Stroke adjustment function available as standard

3 types of stoppers are available.

■ Rubber cushion stopper (Standard)

■ Metal stopper with rubber cushion (M)

■ Shock absorber stopper (A)

Points regarding reliability

High rigidity

In the spirit of LCR

Enables high rigidity and light weight.

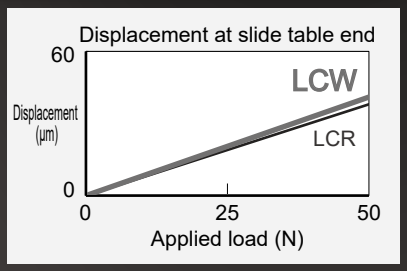

to linear slide cylinders

Three points for ease of use

1. 3-surface mounting

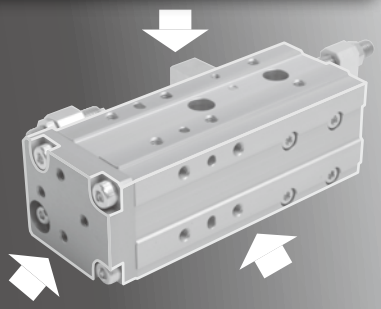

First in the industry!! Uses an innovative L-shaped table.

Flexibility in design is greatly improved.

2. Piping and wiring direction on the same surface

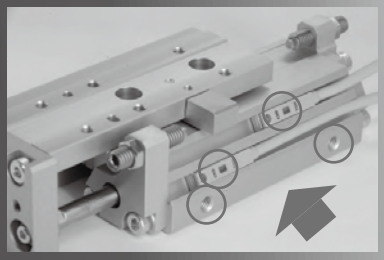

Neat wiring and piping.

Workability and visibility are improved.

3. Compact, space saving

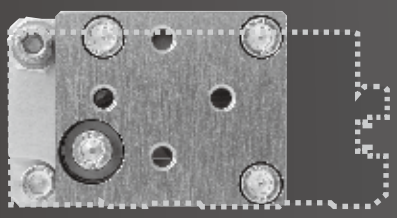

Reduction of width direction by 27% and area ratio by 20%.

Stopper position has been revised.

Area ratio reduced by **20%**!

(compared to LCR)

Points regarding safety

Position locking available

First in the industry!!

In addition to the head side, the rod side * also supports position locking.

* Made-to-order product

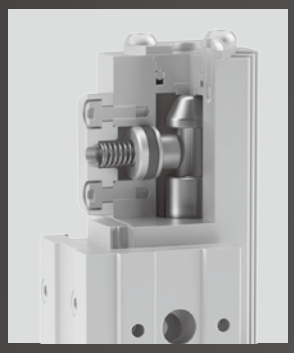

Position locking mechanism

Head side

Rod side*

Series variation

Linear slide cylinder LCW Series

● : Standard ◎ : Option : Not available

Variation	Model No. JIS symbol	Bore size (mm)	Stroke length (mm)			Stopper					Switch	Page
						Cushion stopper	Rubber cushion long stopper	Metal stopper with rubber cushion	Metal long stopper with rubber cushion	Shock absorber stopper		
			30	50	75	Blank	S	M	MS	A		
Double acting/ single rod	LCW 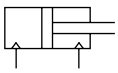	ø12	●	●	●	●	◎	◎	◎	◎	◎	204
		ø16	●	●	●	●	◎	◎	◎	◎	◎	
		ø20	●	●	●	●	◎	◎	◎	◎	◎	
Double acting/ position locking	LCW-Q 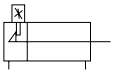	ø12	●	●	●	●	◎	◎	◎	◎	◎	224
		ø16	●	●	●	●	◎	◎	◎	◎	◎	
		ø20	●	●	●	●	◎	◎	◎	◎	◎	

MEMO

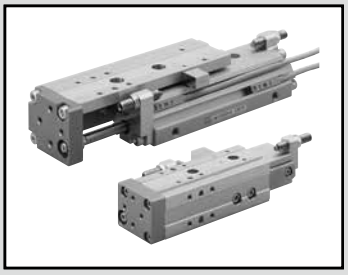

Linear slide cylinder Double acting/single rod

LCW Series

●Bore size: ø12/ø16/ø20

JIS symbol 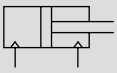

RoHS CAD

Specifications

Item	LCW		
Bore size mm	ø12	ø16	ø20
Actuation	Double acting		
Working fluid	Compressed air		
Max. working pressure MPa	0.7 (≈100 psi, 7 bar)		
Min. working pressure MPa	0.15 (≈22 psi, 1.5 bar) (*1)		
Proof pressure MPa	1.05 (≈150 psi, 10.5 bar)		
Ambient temperature °C	-10 (14°F) to 60 (140°F) (no freezing) (*2)		
Port size	M5		
Working piston speed mm/s	50 to 500 (*3)		
Cushion	Rubber cushion		
Lubrication	Not required (use turbine oil class 1 ISO VG32 if necessary for lubrication)		
Allowable absorbed energy J	* Refer to Table 3 on page 243.		

*1: Use at a pressure of 0.4 MPa and over when using a metal stopper with rubber cushion in order to allow metal contact at the end of the stroke.
*2: Operate at -5 to 60°C when using a shock absorber stopper.
*3: Keep within 50 to 200 mm/s when using a metal stopper with rubber cushion.

Stroke length

Bore size (mm)	Standard stroke length (mm)
ø12	30/50/75
ø16	
ø20	

Note: Products with stroke lengths other than the above are not available.

Adjustable stroke range

(Unit: mm)

Bore size (mm)	Standard rubber cushion				Metal with rubber cushion				Shock absorber	
	Standard stroke length		Custom stroke compatible (S)		Standard stroke length (M)		Custom stroke compatible (MS)		Standard stroke length (A)	
	PUSH	PULL	PUSH	PULL	PUSH	PULL	PUSH	PULL	PUSH	PULL
ø12	10	10	28	10	9	11.5	28	11.5	4	6.5
ø16	7.5	7.5	25	7.5	6	8.5	25	8.5	1.5	3.5
ø20	8	8	25	8	7.5	12	25	12	12.5	17

Theoretical thrust table

(Unit: N)

Bore size (mm)	Operating direction	Working pressure MPa						
		0.15	0.2	0.3	0.4	0.5	0.6	0.7
ø12	PUSH	17	23	34	45	57	68	79
	PULL	13	17	25	34	42	51	59
ø16	PUSH	30	40	60	80	101	121	141
	PULL	26	35	52	69	86	104	121
ø20	PUSH	47	63	94	126	157	188	220
	PULL	40	53	79	106	132	158	185

LCM
LCR
LCG
LCW
LCX
STM
STG
STS/STL
STR2
UCA2
ULK*
JSK/M2
JSG
JSC3/JSC4
USSD
UFCD
USC
UB
JSB3
LMB
LML
HCM
HCA
LBC
CAC4
UCAC2
CAC-N
UCAC-N
RCS2
RCC2
PCC
SHC
MCP
GLC
MFC
BBS
RRC
GRC
RV3*
NHS
HRL
LN
Hand
Chuk
MecHnd/Chuk
ShkAbs
FJ
FK
SpdContr
Ending

Switch specifications

Item	Reed 2-wire				Proximity 2-wire		Proximity 3-wire	
	T0H/T0V		T5H/T5V		T2H/T2V	T2WH/T2WV	T3H/T3V	T3WH/T3WV
Applications	For programmable controller, relay		For programmable controller, relay, IC circuit (without indicator lamp), serial connection		Dedicated for programmable controller		For programmable controller, relay	
Output method	-		-		-		NPN output	
Power supply voltage	-		-		-		10 to 28 VDC	
Load voltage	12/24 VDC	110 VAC	5/12/24 VDC	110 VAC	10 to 30 VDC	24 VDC ±10%	30 VDC or less	
Load current	5 to 50 mA	7 to 20 mA	50 mA or less	20 mA or less	5 to 20 mA		100 mA or less	50 mA or less
Indicator lamp	LED (Lit when ON)		Without indicator lamp		LED (Lit when ON)	Red/green LED (Lit when ON)	LED (Lit when ON)	Red/green LED (Lit when ON)
Leakage current	0 mA				1 mA or less		10 μA or less	
Weight g	1 m:18 3 m:49 5 m:80							

Item	Proximity 2-wire	Proximity 3-wire	Proximity 2-wire		Proximity 3-wire	
	F2S	F3S	F2H/F2V	F2YH/F2YV	F3H/F3V	F3YH/F3YV
Applications	Dedicated for programmable controller	For programmable controller, relay	Dedicated for programmable controller		For programmable controller, relay	
Output method	-	NPN output	-		NPN output	
Power supply voltage	-	10 to 28 VDC	-		10 to 28 VDC	
Load voltage	10 to 30 VDC	30 VDC or less	10 to 30 VDC	24 VDC ±10%	30 VDC or less	
Load current	5 to 20 mA	50 mA or less	5 to 20 mA		50 mA or less	
Indicator lamp	Red LED (Lit when ON)		LED (Lit when ON)	Red/green LED (Lit when ON)	LED (Lit when ON)	Red/green LED (Lit when ON)
Leakage current	1 mA or less	10 μA or less	1 mA or less		10 μA or less	
Weight g	1 m:10 3 m:29					

*1 : Refer to Ending Page 1 for detailed switch specifications and dimensions.
*2 : Switches other than the above models, such as switches with connectors, are also available. Refer to Ending Page 1.
*3 : The max. load current is 20 mA at 25°C. The current is lower than 20 mA if the operating ambient temperature around the switch is higher than 25˚C. (5 to 10 mA at 60°C)
*4 : The F type switch uses a bend-resistant lead wire.

Cylinder weight

● Basic (Unit: g)

Bore size (mm)	Stroke length (mm)		
	30	50	75
ø12	240	370	380
ø16	380	390	600
ø20	690	720	1070

● Stopper additional part (Unit: g)

Bore size (mm)	Stopper code		
	S	MS	A
ø12	3	3	0
ø16	3	3	0
ø20	5	5	14

For stopper code M, the weight is the same as the basic.

LCM
LCR
LCG
LCW
LCX
STM
STG
STS/STL
STR2
UCA2
ULK*
JSK/M2
JSG
JSC3/JSC4
USSD
UFCD
USC
UB
JSB3
LMB
LML
HCM
HCA
LBC
CAC4
UCAC2
CAC-N
UCAC-N
RCS2
RCC2
PCC
SHC
MCP
GLC
MFC
BBS
RRC
GRC
RV3*
NHS
HRL
LN
Hand
Chuk
MecHnd/Chuk
ShkAbs
FJ
FK
SpdContr
Ending

How to order

● Without switch (built-in magnet for switch)

LCW - 16 - 30 - R ——— A

● With switch (built-in magnet for switch)

LCW - 16 - 30 - R - T2H - R - A

Ⓐ Bore size

Ⓑ Stroke length

Ⓒ Piping direction

Ⓓ Switch model No.

Code	Description
Ⓐ Bore size (mm)	
12	ø12
16	ø16
20	ø20

Ⓑ Stroke length (mm)	
30	30
50	50
75	75

Ⓒ Piping direction	
R	Right from rod side
L	Left from rod side

Ⓓ Switch model No.

Axial lead wire	Radial lead wire	Contact	Voltage AC	Voltage DC	Display	Lead wire	Bore size ø12	Bore size ø16	Bore size ø20
-	F2S*	Proximity		●	1-color display	2-wire	●		
-	F3S*	Proximity		●	1-color display	3-wire	●		
F2H*	F2V*	Proximity		●	1-color display	2-wire	●		
F3H*	F3V*	Proximity		●	1-color display	3-wire	●		
F2YH*	F2YV*	Proximity		●	2-color display	2-wire	●		
F3YH*	F3YV*	Proximity		●	2-color display	3-wire	●		
T0H*	T0V*	Reed	●	●	1-color display	2-wire			
T5H*	T5V*	Reed	●	●	Without indicator lamp	2-wire			
T2H*	T2V*	Proximity		●	1-color display	2-wire		●	●
T3H*	T3V*	Proximity		●	1-color display	3-wire		●	●
T2WH*	T2WV*	Proximity		●	2-color display	2-wire		●	●
T3WH*	T3WV*	Proximity		●	2-color display	3-wire		●	●

*** Lead wire length**				
Blank	1 m (standard)		●	
3	3 m (option)		●	
5	5 m (option)			●

Ⓔ Switch quantity	
R	1 on rod side
H	1 on head side
D	2

Ⓕ Stopper	
Blank	Cushion stopper
S	Rubber cushion long stopper (custom stroke compatible)
M	Metal stopper with rubber cushion
MS	Long metal stopper with rubber cushion (custom stroke compatible)
A	Shock absorber stopper

[Example of model No.]

LCW-16-30-R-T2H-D-A

Model: Linear slide cylinder

Ⓐ Bore size : ø16
Ⓑ Stroke length : 30 mm
Ⓒ Piping direction : Right from rod side
Ⓓ Switch model No. : Proximity switch T2H, lead wire 1 m
Ⓔ Switch quantity : 2
Ⓕ Stopper : Shock absorber

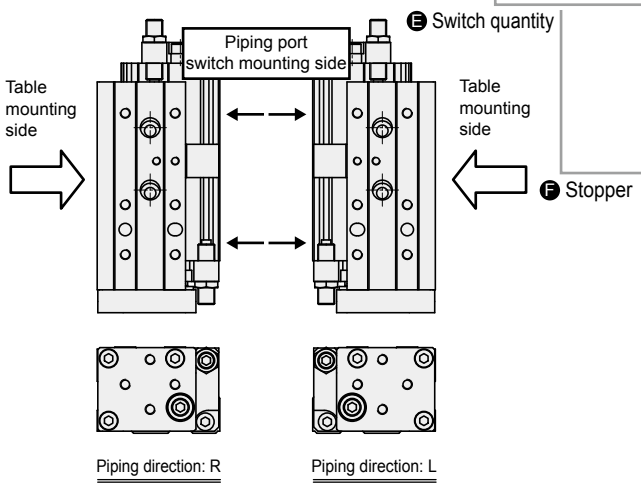

How to order switch

For ø12

SW - F2H

↓

Switch model No.
(Item Ⓓ on page 206)

For ø16, ø20

SW - T0H

↓

Switch model No.
(Item Ⓓ on page 206)

How to order discrete rubber cushion stopper

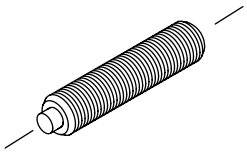

LCW - 12 - S01

↓

Bore size
(Item Ⓐ on page 206)

Ⓐ Adjustable stroke range	Bore size	Thread size	Adjustable stroke length
S01 (Standard)	ø12	M6×1.0	Single side 10 mm
	ø16	M6×1.0	Single side 7.5 mm
	ø20	M8×1.0	Single side 8 mm
S02 (Long)	ø12	M6×1.0	Single side 28 mm
	ø16	M6×1.0	Single side 25 mm
	ø20	M8×1.0	Single side 25 mm

*1: SO2 can also be mounted to the head side.
Adjustable stroke length in that case is the same as above.

How to order discrete metal stopper with rubber cushion

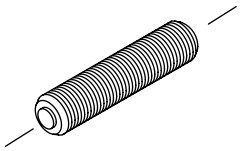

LCW - 12 - M01

↓

Bore size
(Item Ⓐ on page 206)

Ⓐ Adjustable stroke range	Bore size	Thread size	Adjustable stroke length	
			PUSH	PULL
M01 (Standard)	ø12	M6×1.0	Single side 9 mm	Single side 11.5 mm
	ø16	M6×1.0	Single side 6 mm	Single side 8.5 mm
	ø20	M8×1.0	Single side 7.5 mm	Single side 12 mm
M02 (Long)	ø12	M6×1.0	Single side 28 mm	Single side 30 mm
	ø16	M6×1.0	Single side 25 mm	Single side 27 mm
	ø20	M8×1.0	Single side 25 mm	Single side 30 mm

*1: Cannot be changed from the rubber cushion stopper.
*2: Cannot be changed from the shock absorber stopper.
(ø12, ø16 only)
*3: MO2 can also be mounted to the head side.
Adjustable stroke length in that case is the same as above.

How to order discrete shock absorber stopper

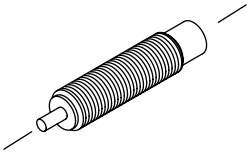

LCW - 12 - A01

↓

Bore size
(Item Ⓐ on page 206)

Bore size	Thread size
ø12	M6×0.75
ø16	M6×0.75
ø20	M8×1.0

*1: Cannot be changed from the rubber cushion stopper.
*2: Cannot be changed from the metal stopper with rubber cushion.
(ø12, ø16 only)

Internal structure and parts list

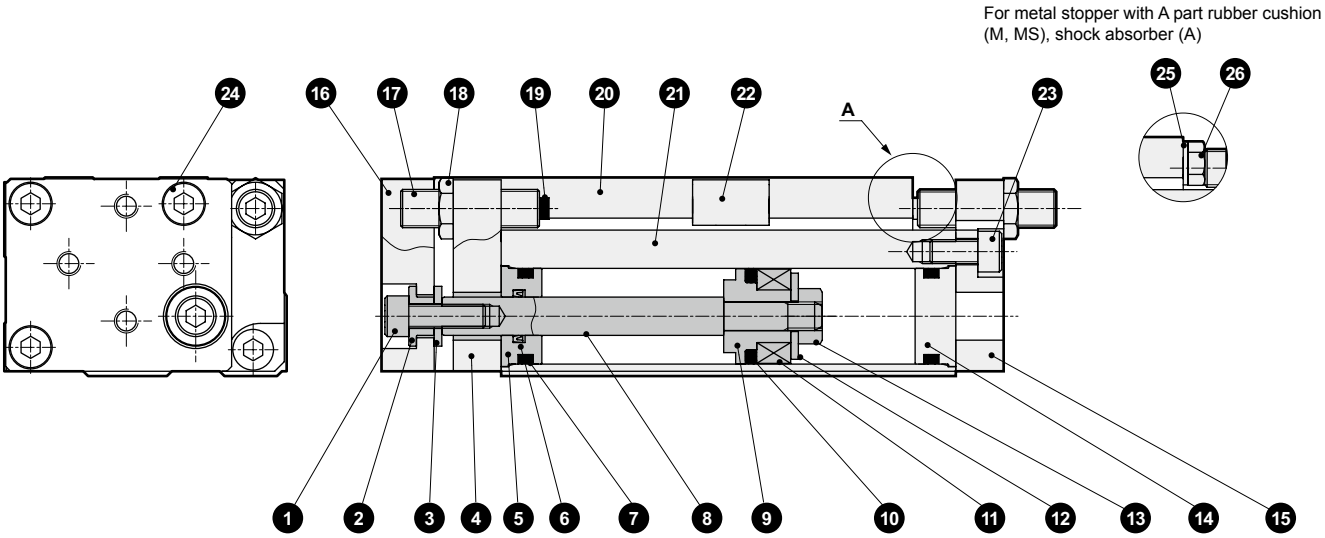

Parts list

No.	Part name	Material	Remarks	No.	Part name	Material	Remarks
1	Hexagon socket head cap screw	Steel	Zinc chromate	16	End plate	Aluminum alloy	Hard alumite
2	Floating bush A	Stainless steel		17	Stopper bolt	Steel	Nickeling
3	Floating bush B	Stainless steel		18	Hexagon nut	Steel	Nickeling
4	Cover holder	Aluminum alloy	Alumite	19	Cushion rubber	Urethane rubber	
5	Rod cover	Aluminum alloy	Hard alumite	20	Table	Aluminum alloy	Alumite
6	Rod packing	Nitrile rubber		21	Body	Aluminum alloy	Hard alumite
7	O-ring	Nitrile rubber		22	Stopper block	Steel	Nickeling
8	Piston rod	Stainless steel		23	Hexagon socket head cap screw	Steel	Zinc chromate
9	Piston	Aluminum alloy	Chromate	24	Hexagon socket head cap screw	Steel	Zinc chromate
10	Piston packing	Nitrile rubber		25	Plain washer	Stainless steel	
11	Magnet	-		26	Hexagon head bolt	Stainless steel	
12	Plain washer	Stainless steel					
13	Hexagon nut	Stainless steel					
14	Head cover	Aluminum alloy	Chromate				
15	Cover holder	Aluminum alloy	Alumite				

Repair parts list

Bore size (mm)	Kit No.	Repair parts No.
ø12	LCW-12K	6 7 10 19
ø16	LCW-16K	
ø20	LCW-20K	

MEMO

LCM
LCR
LCG
LCW
LCX
STM
STG
STS/STL
STR2
UCA2
ULK*
JSK/M2
JSG
JSC3/JSC4
USSD
UFCD
USC
UB
JSB3
LMB
LML
HCM
HCA
LBC
CAC4
UCAC2
CAC-N
UCAC-N
RCS2
RCC2
PCC
SHC
MCP
GLC
MFC
BBS
RRC
GRC
RV3*
NHS
HRL
LN
Hand
Chuk
MecHnd/Chuk
ShkAbs
FJ
FK
SpdContr
Ending

Dimensions (bore size: ø12)

● LCW-12
Stroke length: 30 Piping direction: R

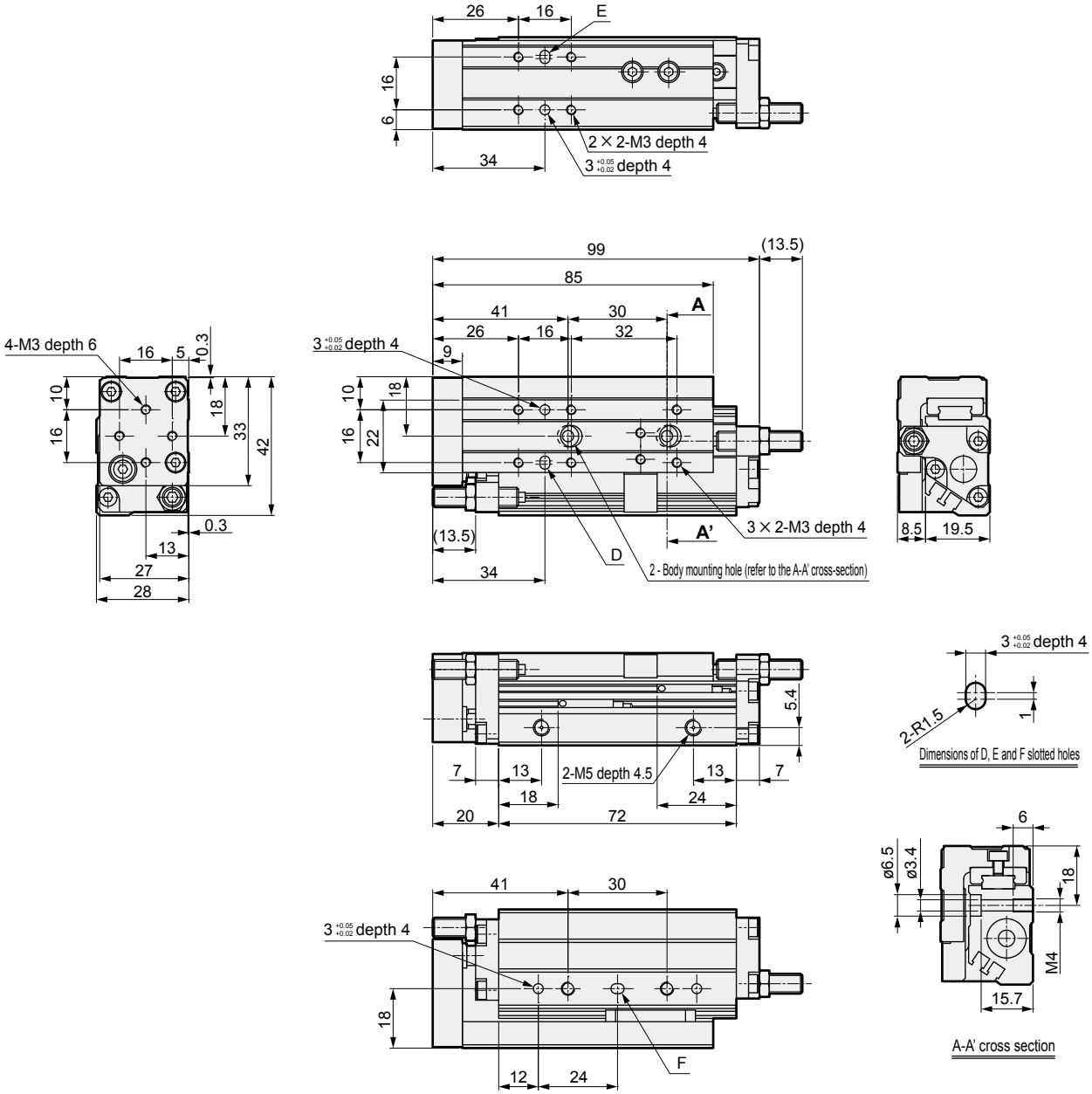

● Dimensions of protruding section when the F2S or F3S cylinder switch is mounted

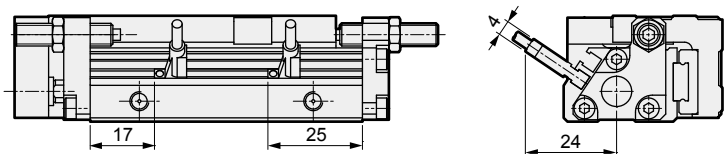

*1: When using a positioning hole, use a pin of dimensions that do not require press fitting. The recommended tolerance of a pin is JIS tolerance m6 or less.
*2: Mount the rod side switch for the radial lead wire, as shown in the figure.
*3: Mount as shown in the figure for F2S and F3S switch specifications.

LCM
LCR
LCG
LCW
LCX
STM
STG
STS/STL
STR2
UCA2
ULK*
JSK/M2
JSG
JSC3/JSC4
USSD
UFCD
USC
UB
JSB3
LMB
LML
HCM
HCA
LBC
CAC4
UCAC2
CAC-N
UCAC-N
RCS2
RCC2
PCC
SHC
MCP
GLC
MFC
BBS
RRC
GRC
RV3*
NHS
HRL
LN
Hand
Chuk
MecHnd/Chuk
ShkAbs
FJ
FK
SpdContr
Ending

Dimensions (bore size: ø12)

● LCW-12
Stroke length: 50, 75 Piping direction: R
(Body mounting hole in the figure shows 75 mm stroke length)

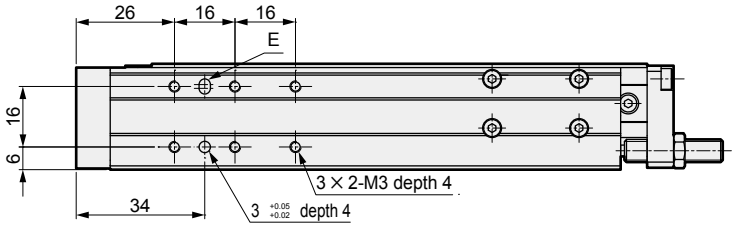

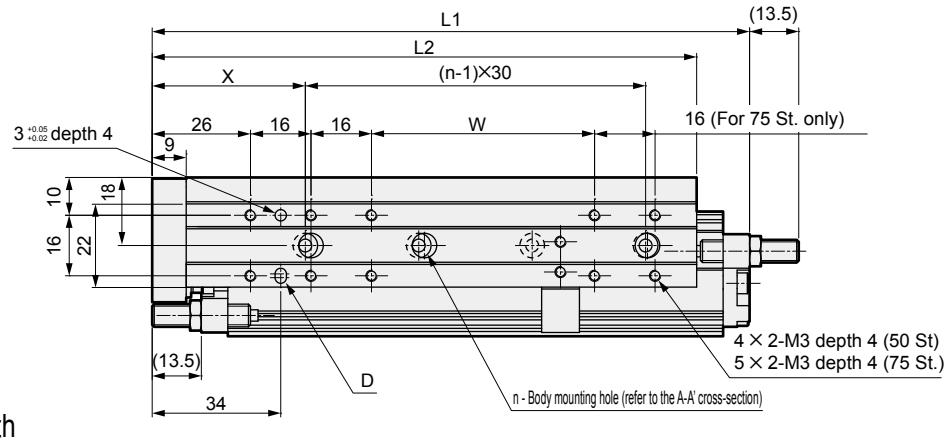

Dimensions by stroke length

Stroke length	50	75
L1	133	158
L2	119	144
L3	106	131
X	43	40.5
Y	50	53.5
W	50	59
n	3	4

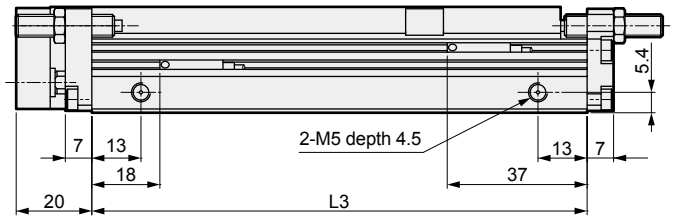

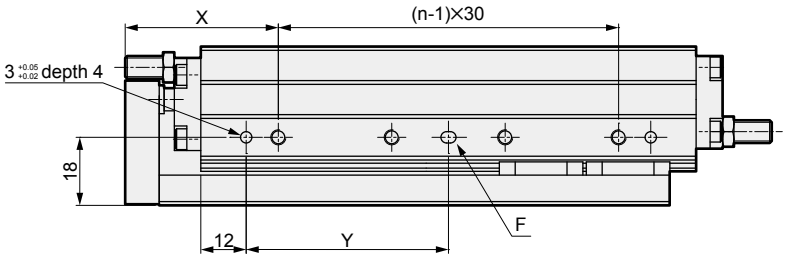

● Dimensions of protruding section when the F2S or F3S cylinder switch is mounted

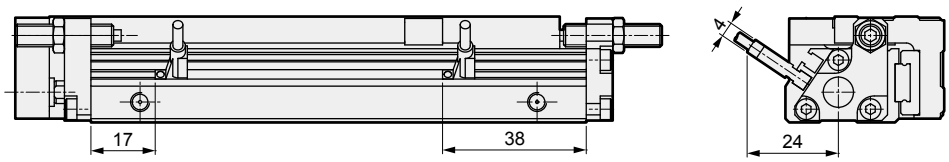

*1: When using a positioning hole, use a pin of dimensions that do not require press fitting. The recommended tolerance of a pin is JIS tolerance m6 or less.
*2: Mount the rod side switch for the radial lead wire, as shown in the figure.
*3: Mount as shown in the figure for F2S and F3S switch specifications.

LCM
LCR
LCG
LCW
LCX
STM
STG
STS/STL
STR2
UCA2
ULK*
JSK/M2
JSG
JSC3/JSC4
USSD
UFCD
USC
UB
JSB3
LMB
LML
HCM
HCA
LBC
CAC4
UCAC2
CAC-N
UCAC-N
RCS2
RCC2
PCC
SHC
MCP
GLC
MFC
BBS
RRC
GRC
RV3*
NHS
HRL
LN
Hand
Chuk
MecHnd/Chuk
ShkAbs
FJ
FK
SpdContr
Ending

Dimensions (bore size: ø12)

● LCW-12
Stroke length: 30 Piping direction: L

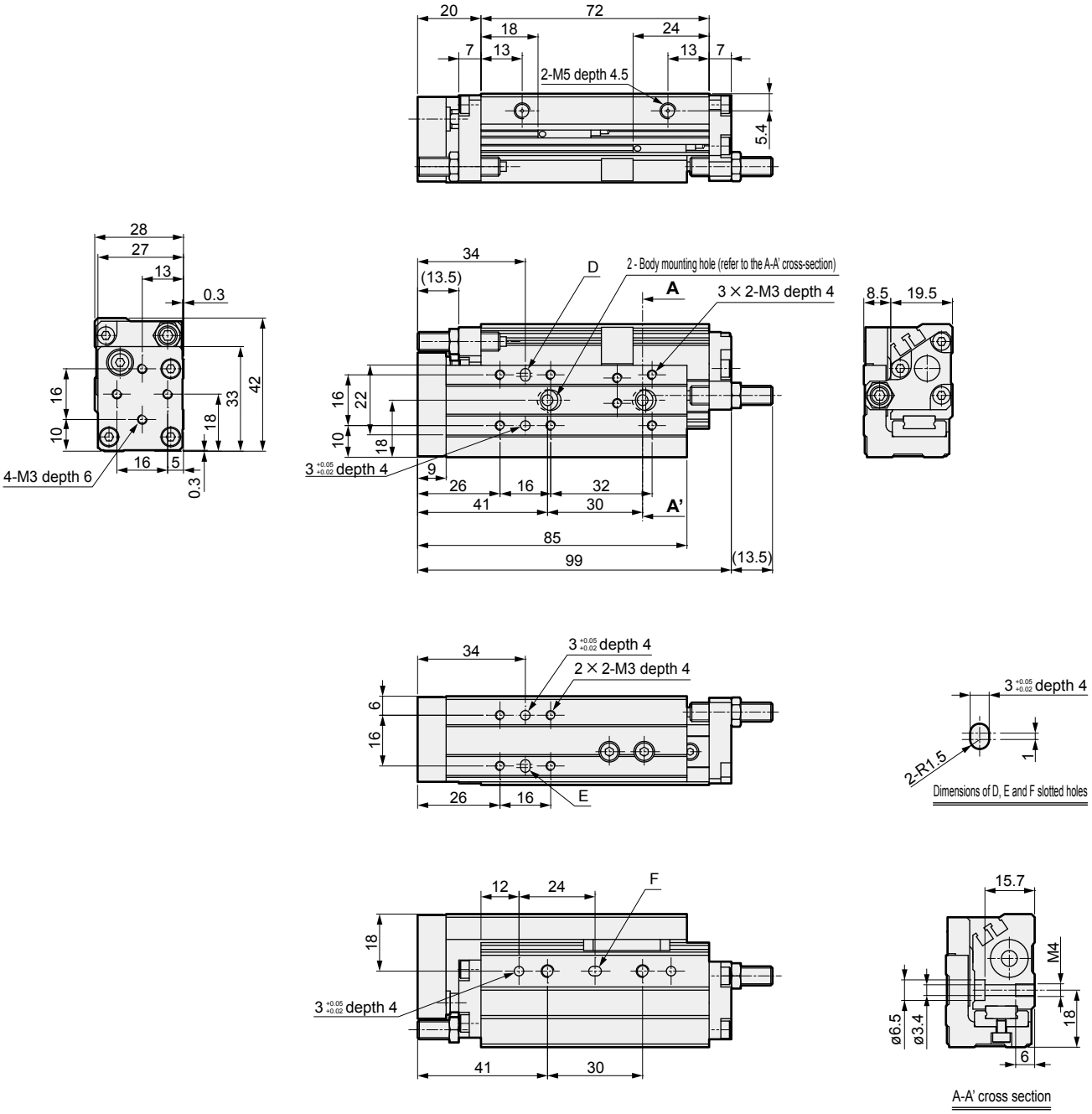

● Dimensions of protruding section when the F2S or F3S cylinder switch is mounted

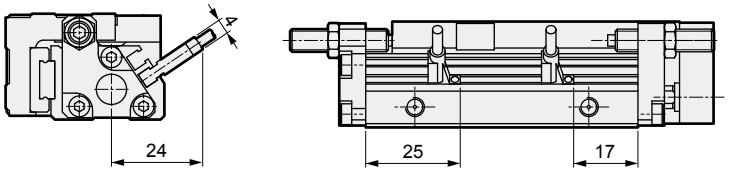

*1: When using a positioning hole, use a pin of dimensions that do not require press fitting. The recommended tolerance of a pin is JIS tolerance m6 or less.
*2: Mount the rod side switch for the radial lead wire, as shown in the figure.
*3: Mount as shown in the figure for F2S and F3S switch specifications.

LCM
LCR
LCG
LCW
LCX
STM
STG
STS/STL
STR2
UCA2
ULK*
JSK/M2
JSG
JSC3/JSC4
USSD
UFCD
USC
UB
JSB3
LMB
LML
HCM
HCA
LBC
CAC4
UCAC2
CAC-N
UCAC-N
RCS2
RCC2
PCC
SHC
MCP
GLC
MFC
BBS
RRC
GRC
RV3*
NHS
HRL
LN
Hand
Chuk
MecHnd/Chuk
ShkAbs
FJ
FK
SpdContr
Ending

Dimensions (bore size: ø12)

● LCW-12
Stroke length: 50, 75 Piping direction: L
(Body mounting hole in the figure shows 75 mm stroke length)

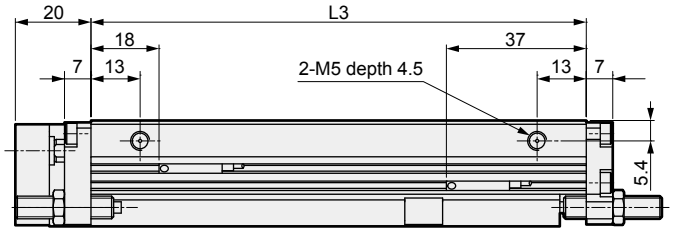

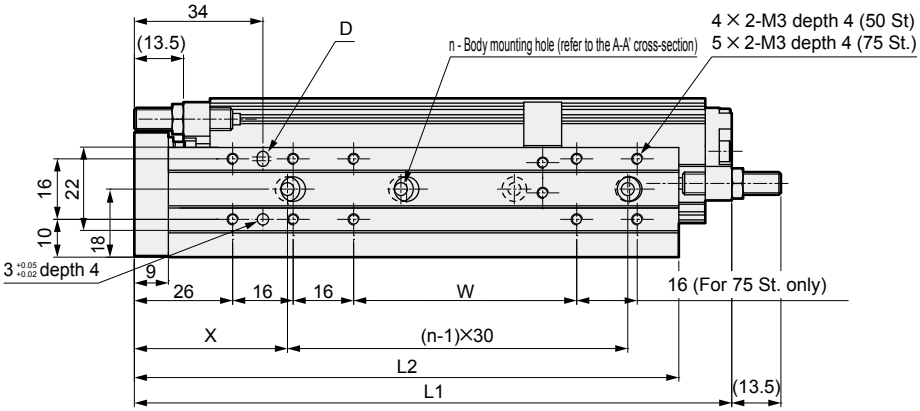

Dimensions by stroke length

Stroke length	50	75
L1	133	158
L2	119	144
L3	106	131
X	43	40.5
Y	50	53.5
W	50	59
n	3	4

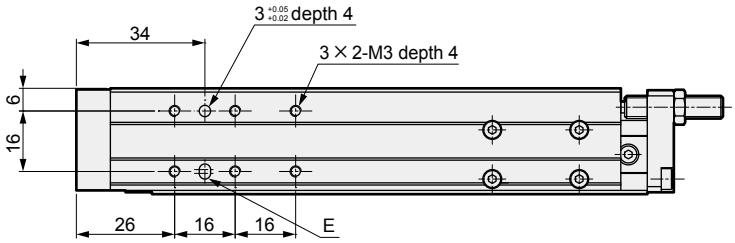

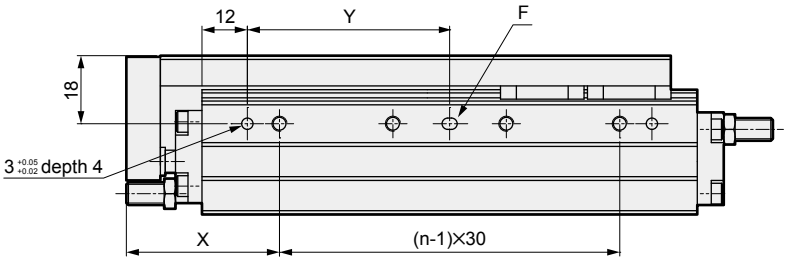

● Dimensions of protruding section when the F2S or F3S cylinder switch is mounted

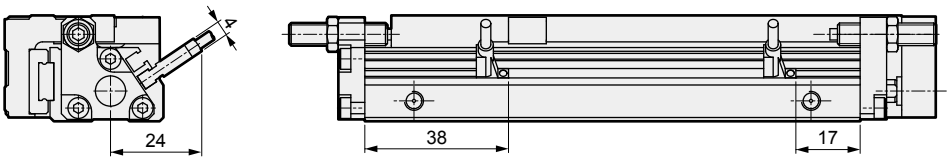

*1: When using a positioning hole, use a pin of dimensions that do not require press fitting. The recommended tolerance of a pin is JIS tolerance m6 or less.
*2: Mount the rod side switch for the radial lead wire, as shown in the figure.
*3: Mount as shown in the figure for F2S and F3S switch specifications.

LCM
LCR
LCG
LCW
LCX
STM
STG
STS/STL
STR2
UCA2
ULK*
JSK/M2
JSG
JSC3/JSC4
USSD
UFCD
USC
UB
JSB3
LMB
LML
HCM
HCA
LBC
CAC4
UCAC2
CAC-N
UCAC-N
RCS2
RCC2
PCC
SHC
MCP
GLC
MFC
BBS
RRC
GRC
RV3*
NHS
HRL
LN
Hand
Chuk
MecHnd/Chuk
ShkAbs
FJ
FK
SpdContr
Ending

Dimensions (bore size: ø16)

● LCW-16
Stroke length: 30, 50 Piping direction: R
(Body mounting hole in the figure shows 30 mm stroke length)

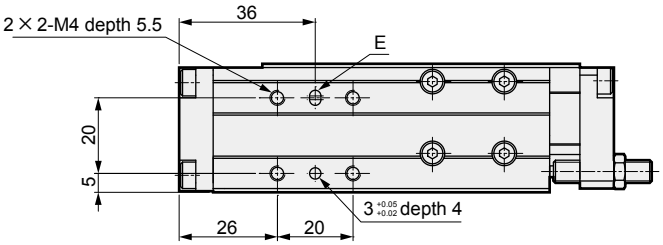

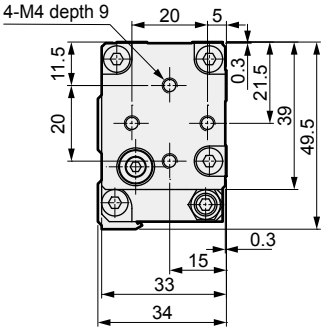

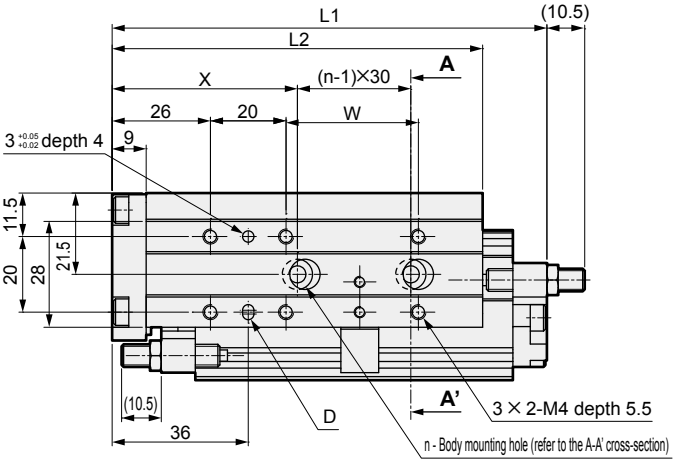

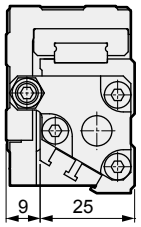

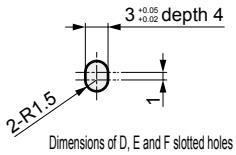

Dimensions of D, E and F slotted holes

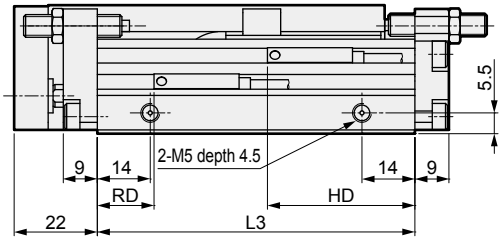

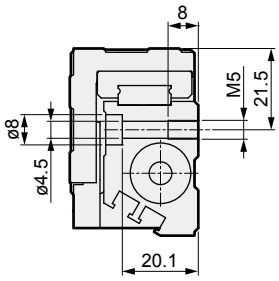

A-A' cross section

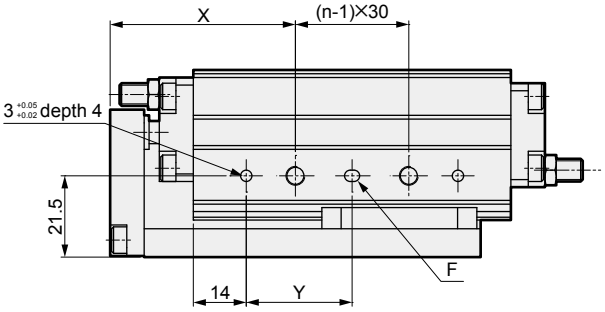

Dimensions by stroke length

Stroke length		30	50
L1		115	135
L2		98	118
L3		84	104
X		49	44
Y		28	50
W		35	55
n		2	3
T0/5* T2/3*	RD	15	
	HD	39	
T2/3W*	RD	17	
	HD	37	

*1: When using a positioning hole, use a pin of dimensions that do not require press fitting. The recommended tolerance of a pin is JIS tolerance m6 or less.
*2: Mount the rod side switch for the radial lead wire, as shown in the figure.

LCM
LCR
LCG
LCW
LCX
STM
STG
STS/STL
STR2
UCA2
ULK*
JSK/M2
JSG
JSC3/JSC4
USSD
UFCD
USC
UB
JSB3
LMB
LML
HCM
HCA
LBC
CAC4
UCAC2
CAC-N
UCAC-N
RCS2
RCC2
PCC
SHC
MCP
GLC
MFC
BBS
RRC
GRC
RV3*
NHS
HRL
LN
Hand
Chuk
MecHnd/Chuk
ShkAbs
FJ
FK
SpdContr
Ending

Dimensions (bore size: ø16)

● LCW-16
Stroke length: 75 Piping direction: R

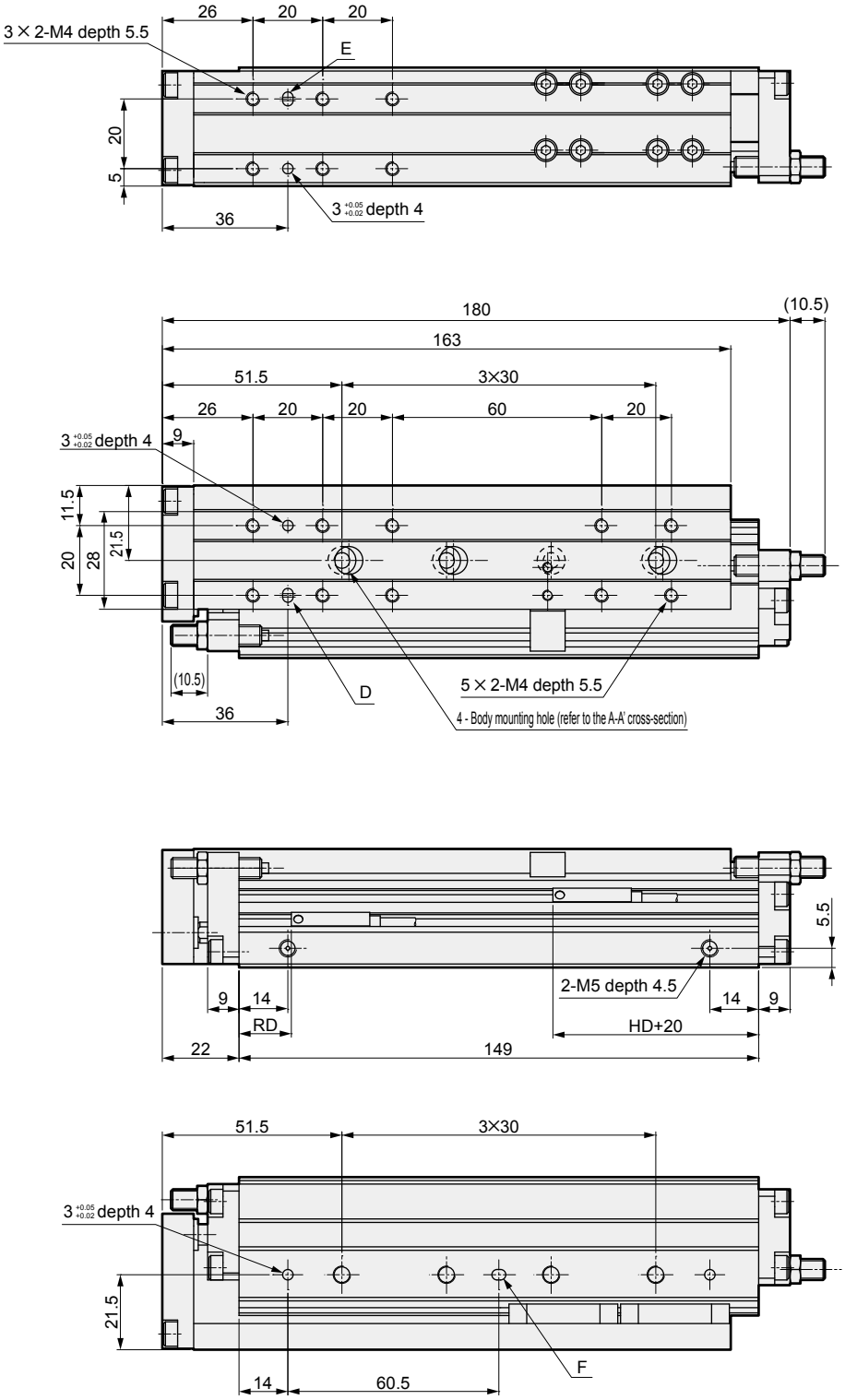

*1: When using a positioning hole, use a pin of dimensions that do not require press fitting. The recommended tolerance of a pin is JIS tolerance m6 or less.
*2: Mount the rod side switch for the radial lead wire, as shown in the figure.

LCM
LCR
LCG
LCW
LCX
STM
STG
STS/STL
STR2
UCA2
ULK*
JSK/M2
JSG
JSC3/JSC4
USSD
UFCD
USC
UB
JSB3
LMB
LML
HCM
HCA
LBC
CAC4
UCAC2
CAC-N
UCAC-N
RCS2
RCC2
PCC
SHC
MCP
GLC
MFC
BBS
RRC
GRC
RV3*
NHS
HRL
LN
Hand
Chuk
MecHnd/Chuk
ShkAbs
FJ
FK
SpdContr
Ending

Dimensions (bore size: ø16)

● LCW-16
Stroke length: 30, 50 Piping direction: L
(Body mounting hole in the figure shows 30 mm stroke length)

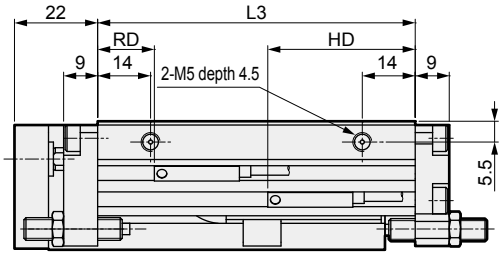

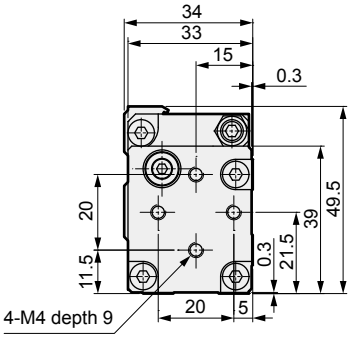

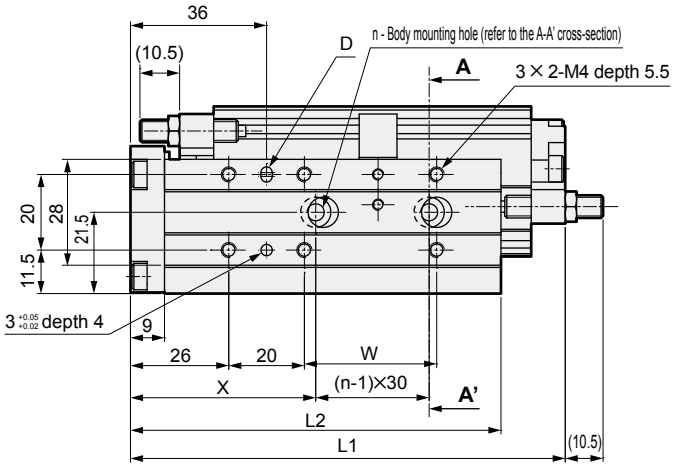

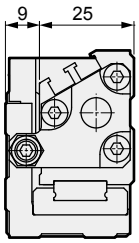

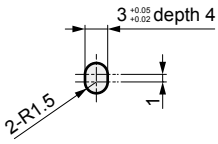

Dimensions of D, E and F slotted holes

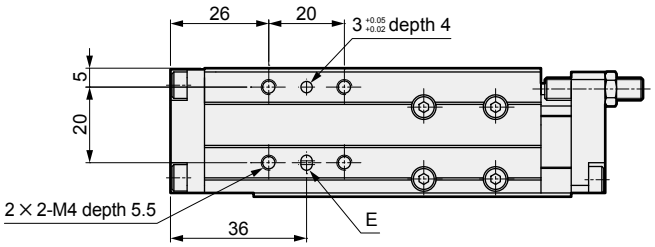

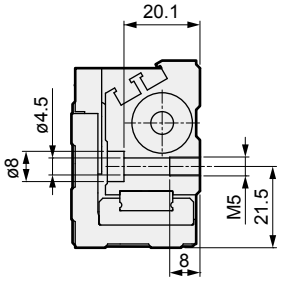

A-A' cross section

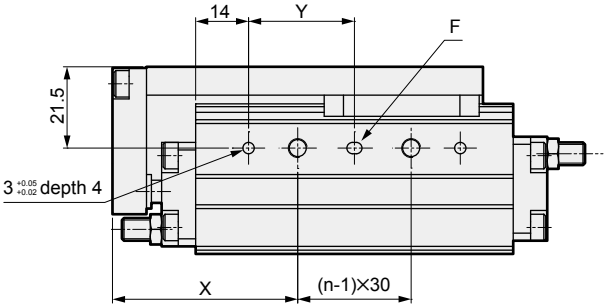

Dimensions by stroke length

Stroke length		30	50
L1		115	135
L2		98	118
L3		84	104
X		49	44
Y		28	50
W		35	55
n		2	3
T0/5* T2/3*	RD	15	
	HD	39	
T2/3W*	RD	17	
	HD	37	

*1: When using a positioning hole, use a pin of dimensions that do not require press fitting. The recommended tolerance of a pin is JIS tolerance m6 or less.
*2: Mount the rod side switch for the radial lead wire, as shown in the figure.

LCM
LCR
LCG
LCW
LCX
STM
STG
STS/STL
STR2
UCA2
ULK*
JSK/M2
JSG
JSC3/JSC4
USSD
UFCD
USC
UB
JSB3
LMB
LML
HCM
HCA
LBC
CAC4
UCAC2
CAC-N
UCAC-N
RCS2
RCC2
PCC
SHC
MCP
GLC
MFC
BBS
RRC
GRC
RV3*
NHS
HRL
LN
Hand
Chuk
MecHnd/Chuk
ShkAbs
FJ
FK
SpdContr
Ending

Dimensions (bore size: ø16)

● LCW-16
Stroke length: 75 Piping direction: L

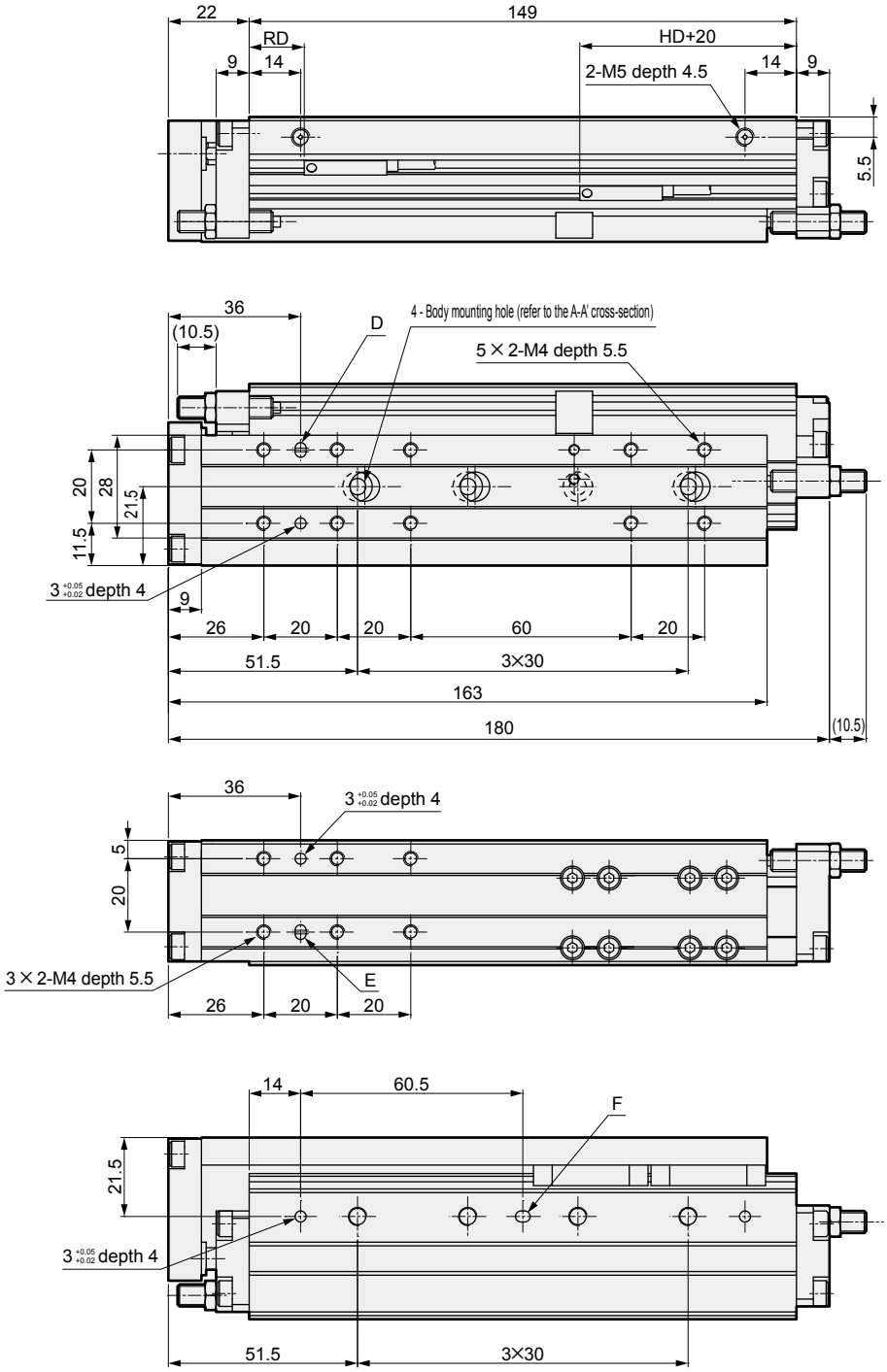

*1: When using a positioning hole, use a pin of dimensions that do not require press fitting. The recommended tolerance of a pin is JIS tolerance m6 or less.
*2: Mount the rod side switch for the radial lead wire, as shown in the figure.

LCM
LCR
LCG
LCW
LCX
STM
STG
STS/STL
STR2
UCA2
ULK*
JSK/M2
JSG
JSC3/JSC4
USSD
UFCD
USC
UB
JSB3
LMB
LML
HCM
HCA
LBC
CAC4
UCAC2
CAC-N
UCAC-N
RCS2
RCC2
PCC
SHC
MCP
GLC
MFC
BBS
RRC
GRC
RV3*
NHS
HRL
LN
Hand
Chuk
MecHnd/Chuk
ShkAbs
FJ
FK
SpdContr
Ending

Dimensions (bore size: ø20)

● LCW-20
Stroke length: 30, 50 Piping direction: R
(Body mounting hole in the figure shows 30 mm stroke length)

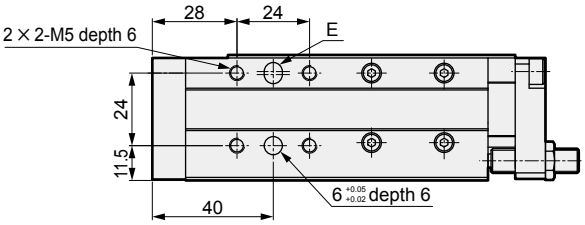

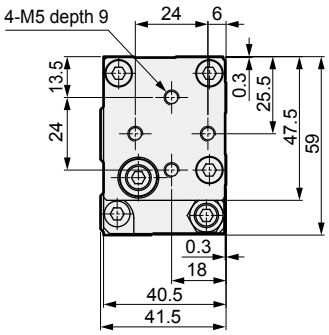

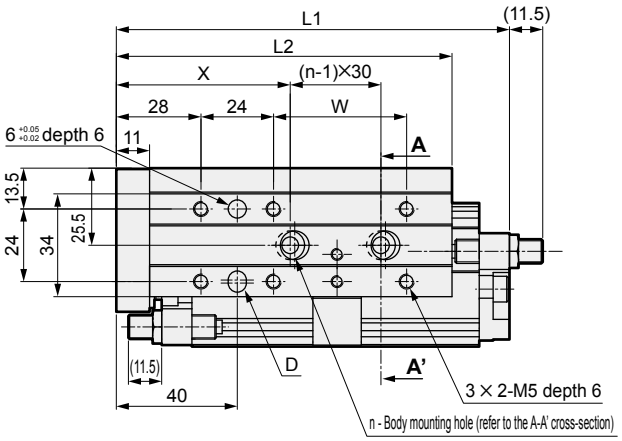

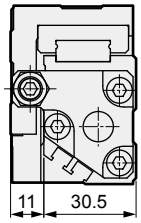

Dimensions by stroke length

Stroke length		30	50
L1		130	150
L2		111	131
L3		95	115
X		57.5	52.5
Y		33.5	60
W		44	64
n		2	3
T0/5* T2/3*	RD	17.5	
	HD	47.5	
T2/3W*	RD	19.5	
	HD	45.5	

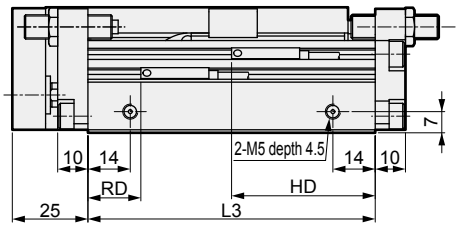

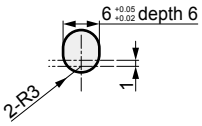

Dimensions of D, E and F slotted holes

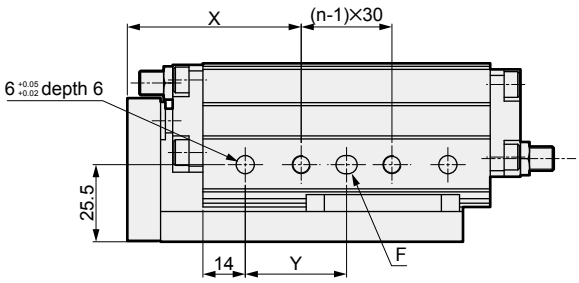

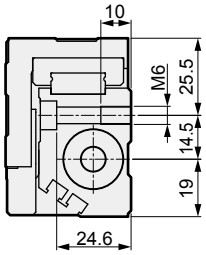

A-A' cross section

*1: When using a positioning hole, use a pin of dimensions that do not require press fitting. The recommended tolerance of a pin is JIS tolerance m6 or less.
*2: Mount the rod side switch for the radial lead wire, as shown in the figure.

LCM
LCR
LCG
LCW
LCX
STM
STG
STS/STL
STR2
UCA2
ULK*
JSK/M2
JSG
JSC3/JSC4
USSD
UFCD
USC
UB
JSB3
LMB
LML
HCM
HCA
LBC
CAC4
UCAC2
CAC-N
UCAC-N
RCS2
RCC2
PCC
SHC
MCP
GLC
MFC
BBS
RRC
GRC
RV3*
NHS
HRL
LN
Hand
Chuk
MecHnd/Chuk
ShkAbs
FJ
FK
SpdContr
Ending

Dimensions (bore size: ø20)

● LCW-20
Stroke length: 75 Piping direction: R

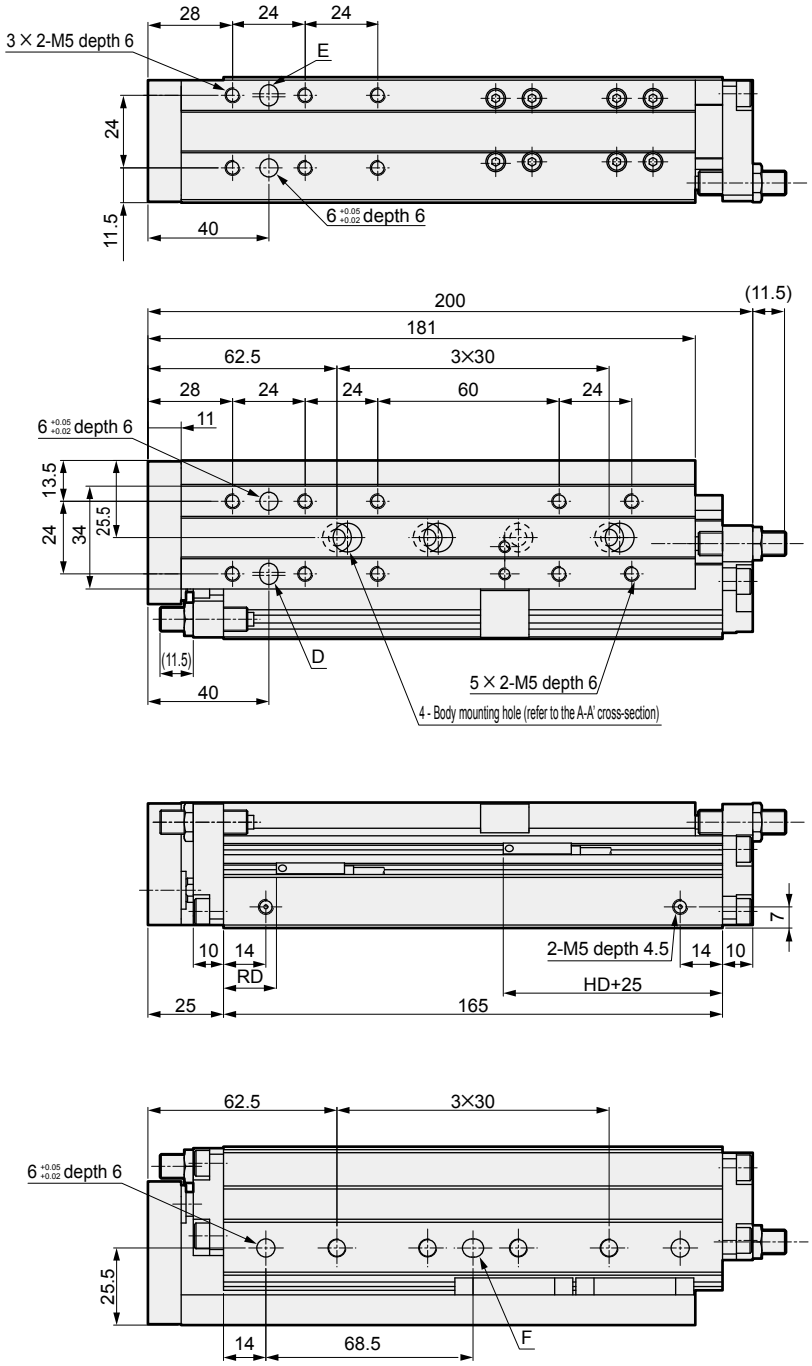

*1: When using a positioning hole, use a pin of dimensions that do not require press fitting. The recommended tolerance of a pin is JIS tolerance m6 or less.
*2: Mount the rod side switch for the radial lead wire, as shown in the figure.

LCM
LCR
LCG
LCW
LCX
STM
STG
STS/STL
STR2
UCA2
ULK*
JSK/M2
JSG
JSC3/JSC4
USSD
UFCD
USC
UB
JSB3
LMB
LML
HCM
HCA
LBC
CAC4
UCAC2
CAC-N
UCAC-N
RCS2
RCC2
PCC
SHC
MCP
GLC
MFC
BBS
RRC
GRC
RV3*
NHS
HRL
LN
Hand
Chuk
MecHnd/Chuk
ShkAbs
FJ
FK
SpdContr
Ending

Dimensions (bore size: ø20)

● LCW-20
Stroke length: 30, 50 Piping direction: L
(Body mounting hole in the figure shows 30 mm stroke length)

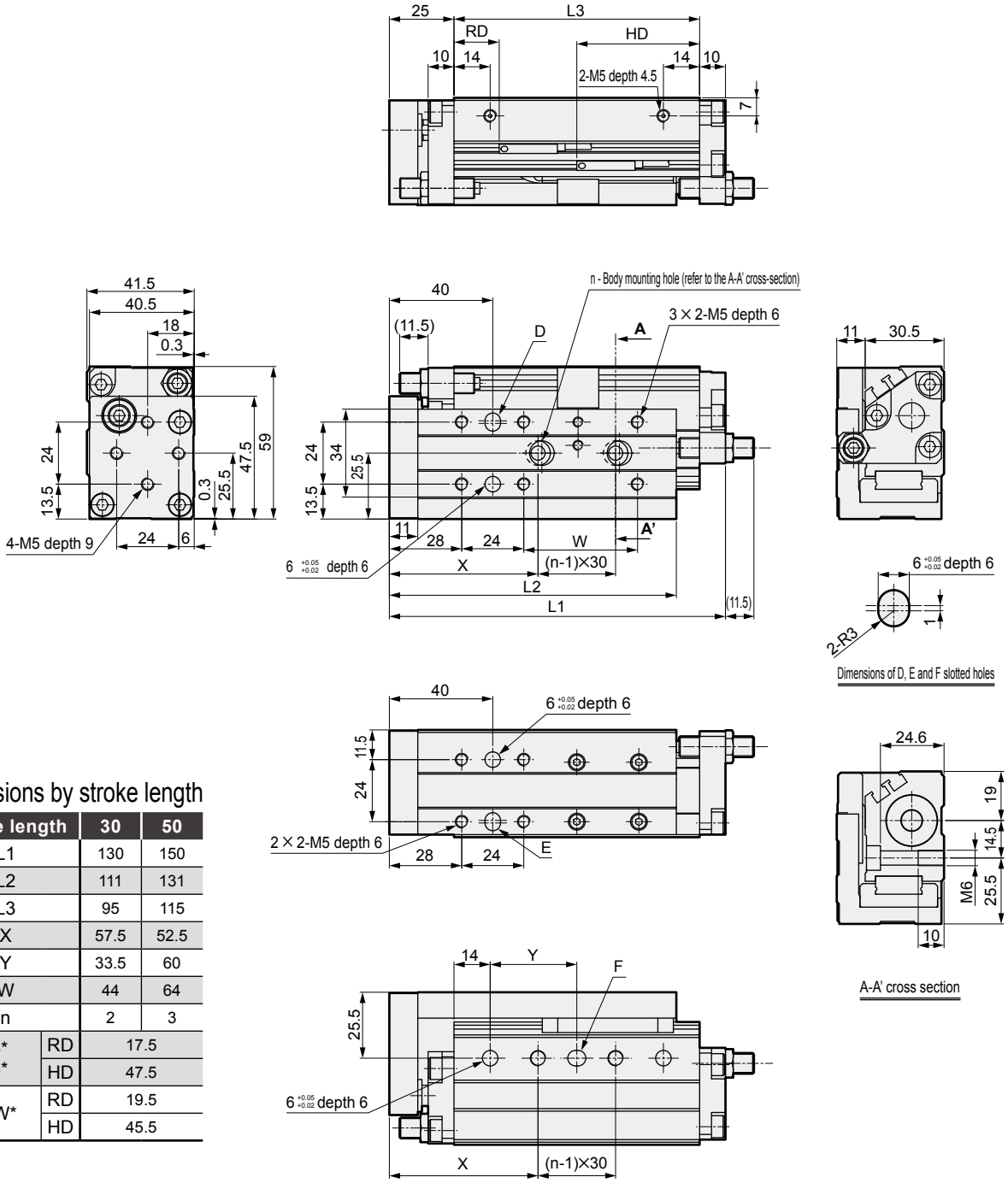

Dimensions by stroke length

Stroke length		30	50
L1		130	150
L2		111	131
L3		95	115
X		57.5	52.5
Y		33.5	60
W		44	64
n		2	3
T0/5* T2/3*	RD	17.5	
	HD	47.5	
T2/3W*	RD	19.5	
	HD	45.5	

*1: When using a positioning hole, use a pin of dimensions that do not require press fitting. The recommended tolerance of a pin is JIS tolerance m6 or less.
*2: Mount the rod side switch for the radial lead wire, as shown in the figure.

LCM
LCR
LCG
LCW
LCX
STM
STG
STS/STL
STR2
UCA2
ULK*
JSK/M2
JSG
JSC3/JSC4
USSD
UFCD
USC
UB
JSB3
LMB
LML
HCM
HCA
LBC
CAC4
UCAC2
CAC-N
UCAC-N
RCS2
RCC2
PCC
SHC
MCP
GLC
MFC
BBS
RRC
GRC
RV3*
NHS
HRL
LN
Hand
Chuk
MecHnd/Chuk
ShkAbs
FJ
FK
SpdContr
Ending

Dimensions (bore size: ø20)

● LCW-20
Stroke length: 75 Piping direction: L

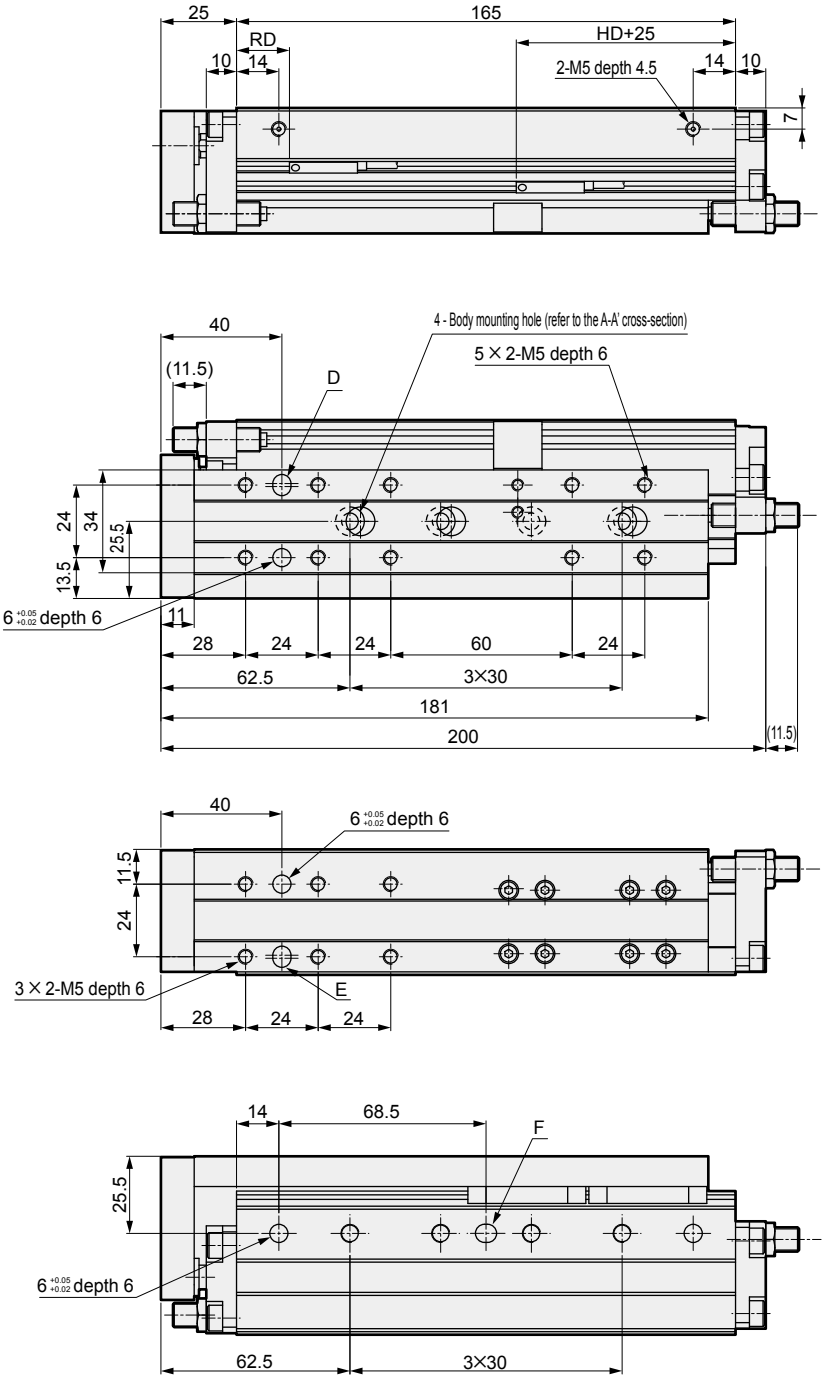

*1: When using a positioning hole, use a pin of dimensions that do not require press fitting. The recommended tolerance of a pin is JIS tolerance m6 or less.
*2: Mount the rod side switch for the radial lead wire, as shown in the figure.

LCM
LCR
LCG
LCW
LCX
STM
STG
STS/STL
STR2
UCA2
ULK*
JSK/M2
JSG
JSC3/JSC4
USSD
UFCD
USC
UB
JSB3
LMB
LML
HCM
HCA
LBC
CAC4
UCAC2
CAC-N
UCAC-N
RCS2
RCC2
PCC
SHC
MCP
GLC
MFC
BBS
RRC
GRC
RV3*
NHS
HRL
LN
Hand
Chuk
MecHnd/Chuk
ShkAbs
FJ
FK
SpdContr
Ending

Dimensions: Option

● Rubber cushion long stopper (S)

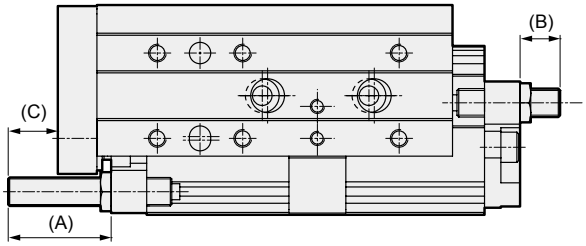

● Metal stopper with rubber cushion (M)

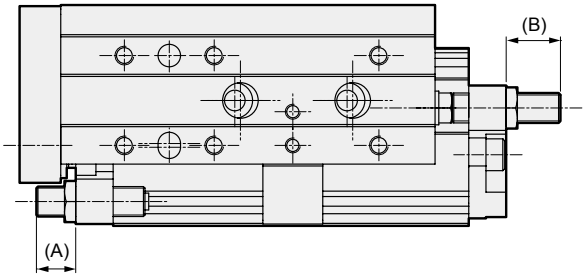

● Metal long stopper with rubber cushion (MS)

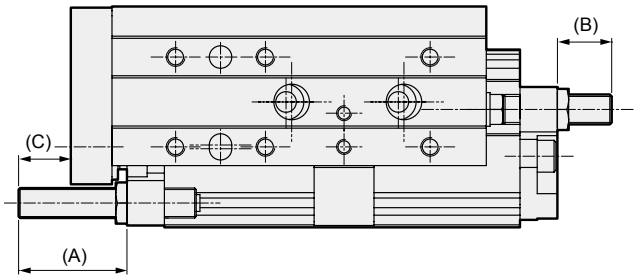

● Shock absorber stopper (A)

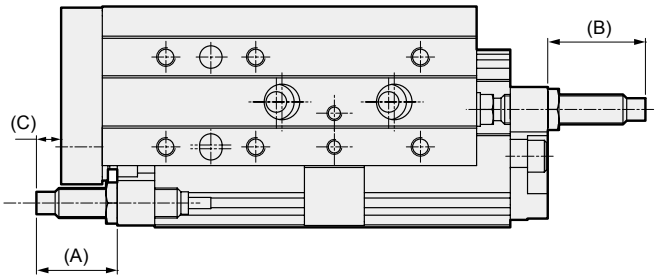

Bore size	Rubber cushion long stopper (S)			Metal stopper with rubber cushion (M)			Metal long stopper with rubber cushion (MS)			Shock absorber stopper (A)		
	A	B	C	A	B	C	A	B	C	A	B	C
ø12	31.5	13.5	18.5	12	14.5	-	31	14.5	18	11	13.5	-
ø16	28.5	10.5	15.5	9.5	11.5	-	28.5	11.5	15.5	8.5	10.5	-
ø20	28.5	11.5	13.5	10.5	15	-	28.5	15	13.5	21.5	26	6.5

MEMO

Linear slide cylinder Double acting/position locking

LCW-Q Series

●Bore size: ø12/ø16/ø20

JIS symbol

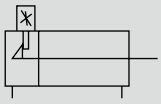

RoHS

Specifications

Item		LCW-Q		
Bore size	mm	ø12	ø16	ø20
Actuation		Double acting		
Working fluid		Compressed air		
Max. working pressure	MPa	0.7 (≈100 psi, 7 bar)		
Min. working pressure	MPa	0.15 (≈22 psi, 1.5 bar) (*1)		
Proof pressure	MPa	1.05 (≈150 psi, 10.5 bar)		
Ambient temperature	°C	-10 (14°F) to 60 (140°F) (no freezing) (*2)		
Port size		M5		
Working piston speed	mm/s	50 to 500 (*3)		
Cushion		Rubber cushion		
Holding force	N	15.5	27.6	47.6
Lubrication		Not required (use turbine oil class 1 ISO VG32 if necessary for lubrication)		
Allowable absorbed energy	J	* Refer to Table 3 on page 243.		

*1: Use at a pressure of 0.4 MPa and over when using a metal stopper with rubber cushion in order to allow metal contact at the end of the stroke.
*2: Operate at -5 to 60°C when using a shock absorber stopper.
*3: Keep within 50 to 200 mm/s when using a metal stopper with rubber cushion.

Stroke length

Bore size (mm)	Standard stroke length (mm)
ø12	30/50/75
ø16	
ø20	

Note: Products with stroke lengths other than the above are not available.

Adjustable stroke range

(Unit: mm)

Bore size (mm)	Standard rubber cushion		Metal with rubber cushion		Shock absorber
	Standard stroke length	Custom stroke compatible (S)	Standard stroke length (M)	Custom stroke compatible (MS)	Standard stroke length (A)
	PUSH	PUSH	PUSH	PUSH	PUSH
ø12	10	28	9	28	4
ø16	7.5	25	6	25	1.5
ø20	8	25	7.5	25	12.5

Theoretical thrust table

(Unit: N)

Bore size (mm)	Operating direction	Working pressure MPa						
		0.15	0.2	0.3	0.4	0.5	0.6	0.7
ø12	PUSH	17	23	34	45	57	68	79
	PULL	13	17	25	34	42	51	59
ø16	PUSH	30	40	60	80	101	121	141
	PULL	26	35	52	69	86	104	121
ø20	PUSH	47	63	94	126	157	188	220
	PULL	40	53	79	106	132	158	185

Switch specifications

Item	Reed 2-wire				Proximity 2-wire		Proximity 3-wire	
	T0H/T0V		T5H/T5V		T2H/T2V	T2WH/T2WV	T3H/T3V	T3WH/T3WV
Applications	For programmable controller, relay		For programmable controller, relay, IC circuit (without indicator lamp), serial connection		Dedicated for programmable controller		For programmable controller, relay	
Output method	-		-		-		NPN output	
Power supply voltage	-		-		-		10 to 28 VDC	
Load voltage	12/24 VDC	110 VAC	5/12/24 VDC	110 VAC	10 to 30 VDC	24 VDC ±10%	30 VDC or less	
Load current	5 to 50 mA	7 to 20 mA	50 mA or less	20 mA or less	5 to 20 mA		100 mA or less	50 mA or less
Indicator lamp	LED (Lit when ON)		Without indicator lamp		LED (Lit when ON)	Red/green LED (Lit when ON)	LED (Lit when ON)	Red/green LED (Lit when ON)
Leakage current	0 mA				1 mA or less		10 μA or less	
Weight g	1 m:18 3 m:49 5 m:80							

Item	Proximity 2-wire	Proximity 3-wire	Proximity 2-wire		Proximity 3-wire	
	F2S	F3S	F2H/F2V	F2YH/F2YV	F3H/F3V	F3YH/F3YV
Applications	Dedicated for programmable controller	For programmable controller, relay	Dedicated for programmable controller		For programmable controller, relay	
Output method	-	NPN output	-		NPN output	
Power supply voltage	-	10 to 28 VDC	-		10 to 28 VDC	
Load voltage	10 to 30 VDC	30 VDC or less	10 to 30 VDC	24 VDC ±10%	30 VDC or less	
Load current	5 to 20 mA	50 mA or less	5 to 20 mA		50 mA or less	
Indicator lamp	Red LED (Lit when ON)		LED (Lit when ON)	Red/green LED (Lit when ON)	LED (Lit when ON)	Red/green LED (Lit when ON)
Leakage current	1 mA or less	10 μA or less	1 mA or less		10 μA or less	
Weight g	1 m:10 3 m:29					

*1 : Refer to Ending Page 1 for detailed switch specifications and dimensions.
*2 : Switches other than the above models, such as switches with connectors, are also available. Refer to Ending Page 1.
*3 : The max. load current is 20 mA at 25°C. The current is lower than 20 mA if the operating ambient temperature around the switch is higher than 25˚C. (5 to 10 mA at 60°C)
*4 : The F type switch uses a bend-resistant lead wire.

Cylinder weight

● Position locking

(Unit: g)

Bore size (mm)	Stroke length (mm)		
	30	50	75
ø12	300	440	450
ø16	450	460	690
ø20	770	800	1,160

● Stopper additional part

(Unit: g)

Bore size (mm)	Stopper code		
	S	MS	A
ø12	3	3	0
ø16	3	3	0
ø20	5	5	14

For stopper code M, the weight is the same as the position locking.

How to order

● Without switch (built-in magnet for switch)

LCW-Q - 16 - 30 - H R ———— S

● With switch (built-in magnet for switch)

LCW-Q - 16 - 30 - H R - T2H - R - S

Ⓐ Bore size

Ⓑ Stroke length

Ⓒ Position locking mechanism

Ⓓ Piping direction

Ⓔ Switch model No.

Ⓕ Switch quantity

Ⓖ Stopper

Code	Description
Ⓐ Bore size (mm)	
12	ø12
16	ø16
20	ø20
Ⓑ Stroke length (mm)	
30	30 mm
50	50 mm
75	75 mm
Ⓒ Position locking mechanism	
H	Head side position locking mechanism
Ⓓ Piping direction	
R	Right from rod side
L	Left from rod side

Ⓔ Switch model No.

Axial lead wire	Radial lead wire	Contact	Voltage AC	Voltage DC	Display	Lead wire	Bore size ø12	Bore size ø16	Bore size ø20
-	F2S*	Proximity		●	1-color display	2-wire	●		
-	F3S*			●		3-wire			
F2H*	F2V*			●		2-wire			
F3H*	F3V*			●		3-wire			
F2YH*	F2YV*			●	2-color display	2-wire			
F3YH*	F3YV*			●		3-wire			
T0H*	T0V*	Reed	●	●	1-color display	2-wire		●	●
T5H*	T5V*		●	●	no indicator lamp				
T2H*	T2V*	Proximity		●	1-color display	2-wire			
T3H*	T3V*			●		3-wire			
T2WH*	T2WV*			●	2-color display	2-wire			
T3WH*	T3WV*			●		3-wire			

* Lead wire length		ø12	ø16	ø20
Blank	1 m (standard)	●		
3	3 m (option)	●		
5	5 m (option)		●	

Ⓕ Switch quantity	
R	1 on rod side
H	1 on head side
D	2

Ⓖ Stopper	
Blank	Cushion stopper
S	Rubber cushion long stopper (custom stroke compatible)
M	Metal stopper with rubber cushion
MS	Long metal stopper with rubber cushion (custom stroke compatible)
A	Shock absorber stopper

[Example of model No.]

LCW-Q-16-30-HR-T2H-D-A

Model: Linear slide cylinder/position locking

Ⓐ Bore size : ø16
Ⓑ Stroke length : 30 mm
Ⓒ Position locking mechanism : Head side position locking mechanism
Ⓓ Piping direction : Right from rod side
Ⓔ Switch model No. : Proximity switch T2H, lead wire 1 m
Ⓕ Switch quantity : 2
Ⓖ Stopper : Shock absorber stopper

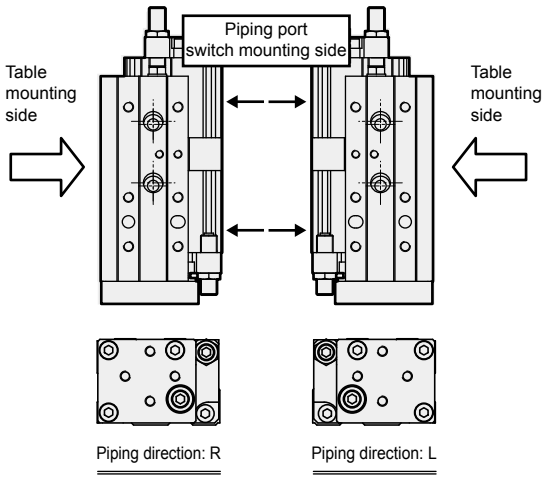

* Refer to page 207 for how to order discrete items.

Internal structure and parts list

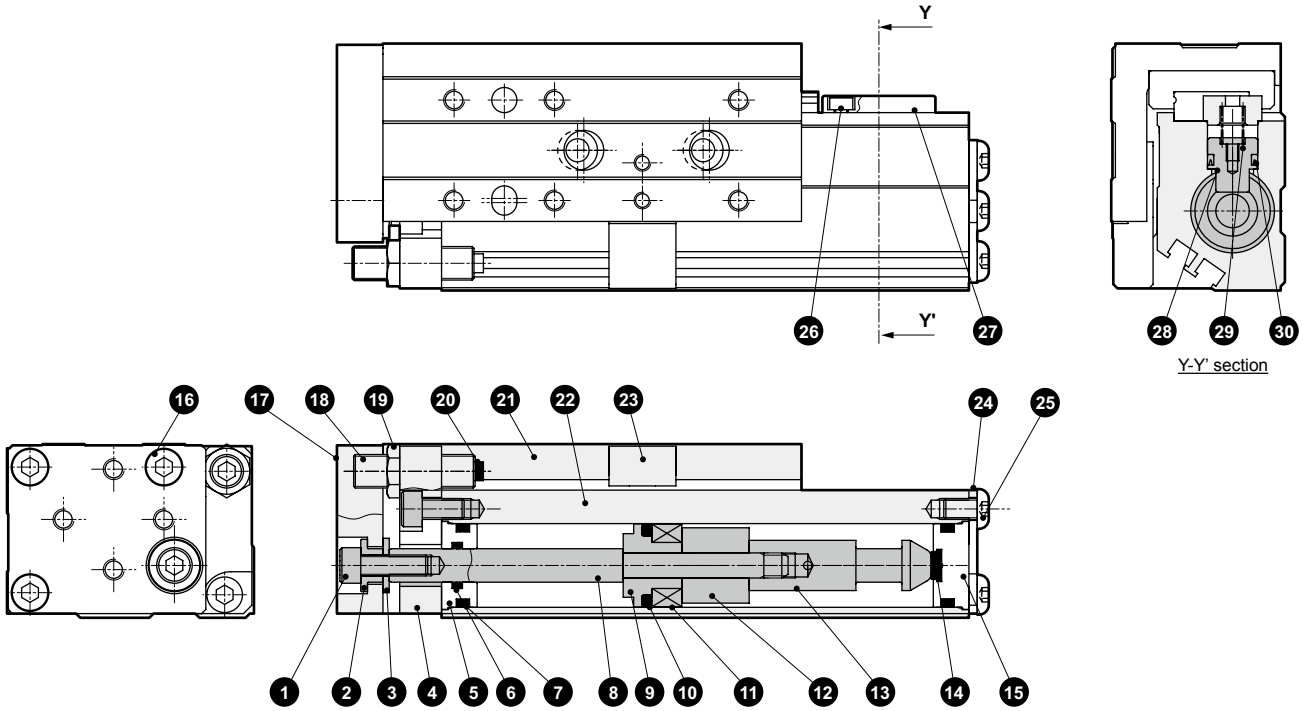

Parts list

No.	Part name	Material	Remarks	No.	Part name	Material	Remarks
1	Hexagon socket head cap screw	Steel	Zinc chromate	16	Hexagon socket head cap screw	Steel	Zinc chromate
2	Floating bush A	Stainless steel		17	End plate	Aluminum alloy	Hard alumite
3	Floating bush B	Stainless steel		18	Stopper bolt	Steel	Nickeling
4	Cover holder	Aluminum alloy	Alumite	19	Hexagon nut	Steel	Nickeling
5	Rod cover	Aluminum alloy	Hard alumite	20	Cushion rubber	Urethane rubber	
6	Rod packing	Nitrile rubber		21	Table	Aluminum alloy	Alumite
7	O-ring	Nitrile rubber		22	Body	Aluminum alloy	Hard alumite
8	Piston rod	Stainless steel		23	Stopper block	Steel	Nickeling
9	Piston	Aluminum alloy	Chromate	24	Cover holder	Stainless steel	
10	Piston packing	Nitrile rubber		25	Hexagon socket button head bolt	Steel	Zinc chromate
11	Magnet	-		26	Hexagon socket head cap screw	Steel	Zinc chromate
12	Collar	Aluminum alloy	Chromate	27	Stopper cover	Stainless steel	
13	Sleeve	Steel	Nitriding	28	Stopper piston	Steel	Nitriding
14	Cushion rubber	Urethane rubber		29	Coil spring	Steel	
15	Head cover	Aluminum alloy	Chromate	30	Stopper packing	Nitrile rubber	

Repair parts list

Bore size (mm)	Kit No.	Repair parts No.
ø12	LCW-Q-12HK	6 7 10 14 24
ø16	LCW-Q-16HK	
ø20	LCW-Q-20HK	

LCM
LCR
LCG
LCW
LCX
STM
STG
STS/STL
STR2
UCA2
ULK*
JSK/M2
JSG
JSC3/JSC4
USSD
UFCD
USC
UB
JSB3
LMB
LML
HCM
HCA
LBC
CAC4
UCAC2
CAC-N
UCAC-N
RCS2
RCC2
PCC
SHC
MCP
GLC
MFC
BBS
RRC
GRC
RV3*
NHS
HRL
LN
Hand
Chuk
MecHnd/Chuk
ShkAbs
FJ
FK
SpdContr
Ending

Dimensions (bore size: ø12)

● LCW-Q-12
Stroke length: 30 Piping direction: R

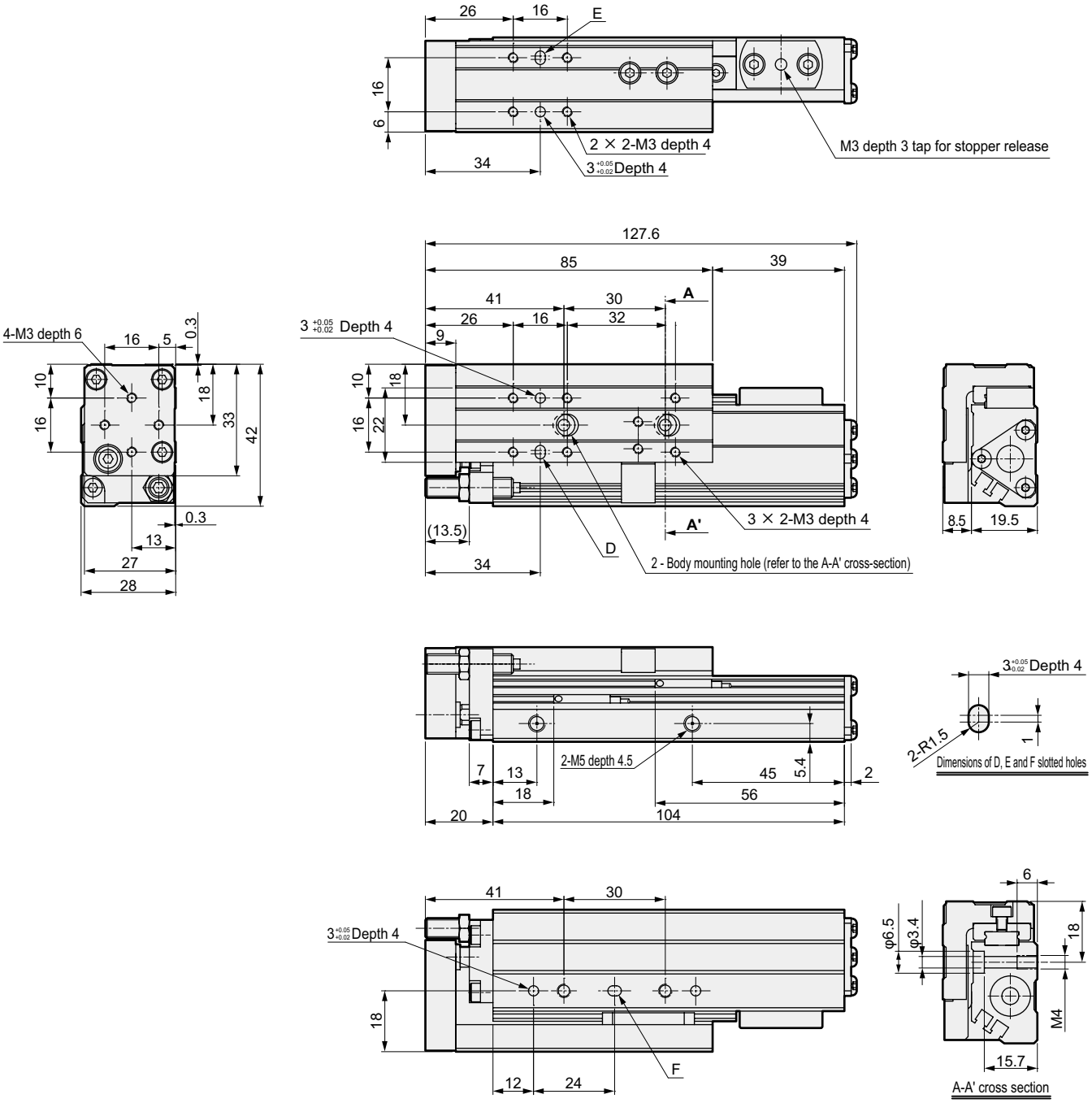

● Dimensions of protruding section when the F2S or F3S cylinder switch is mounted

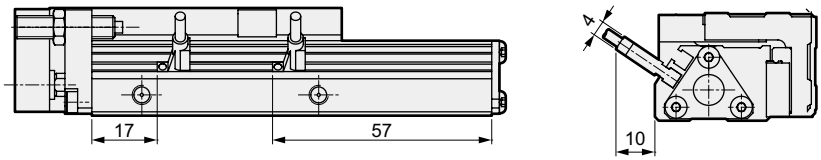

*1: When using a positioning hole, use a pin of dimensions that do not require press fitting. The recommended tolerance of a pin is JIS tolerance m6 or less.
*2: Mount the rod side switch for the radial lead wire, as shown in the figure.
*3: Mount as shown in the figure for F2S and F3S switch specifications.

LCM
LCR
LCG
LCW
LCX
STM
STG
STS/STL
STR2
UCA2
ULK*
JSK/M2
JSG
JSC3/JSC4
USSD
UFCD
USC
UB
JSB3
LMB
LML
HCM
HCA
LBC
CAC4
UCAC2
CAC-N
UCAC-N
RCS2
RCC2
PCC
SHC
MCP
GLC
MFC
BBS
RRC
GRC
RV3*
NHS
HRL
LN
Hand
Chuk
MecHnd/Chuk
ShkAbs
FJ
FK
SpdContr
Ending

Dimensions (bore size: ø12)

● LCW-Q-12
Stroke length: 50, 75 Piping direction: R
(Body mounting hole in the figure shows 75 mm stroke length)

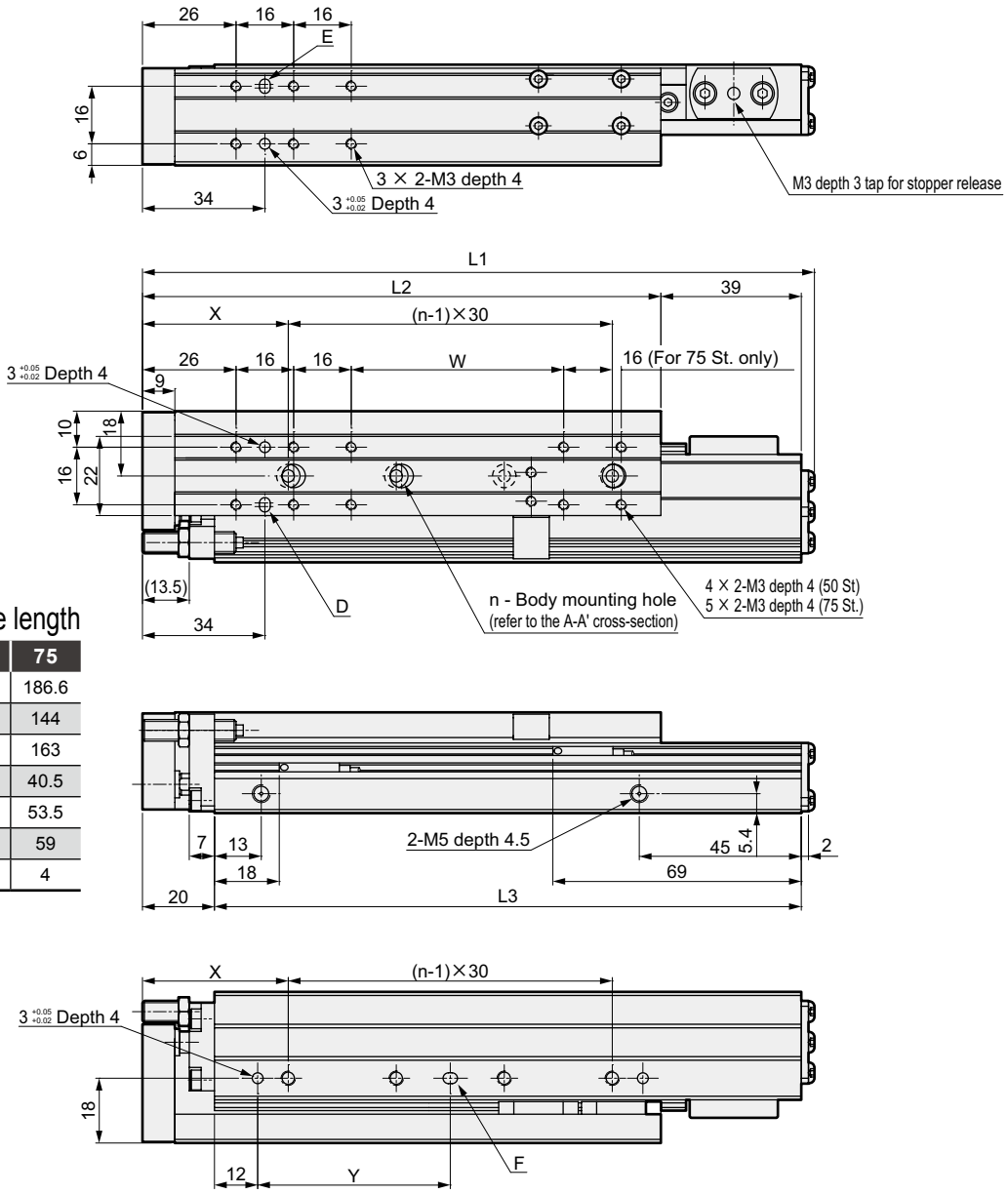

Dimensions by stroke length

Stroke length	50	75
L1	161.6	186.6
L2	119	144
L3	138	163
X	43	40.5
Y	50	53.5
W	50	59
n	3	4

● Dimensions of protruding section when the F2S or F3S cylinder switch is mounted

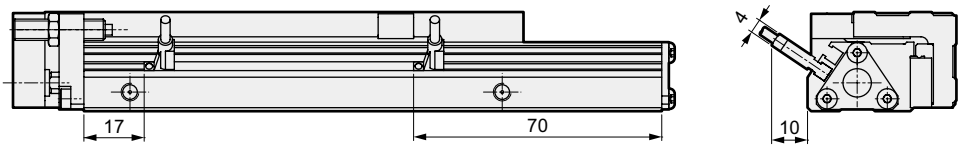

*1: When using a positioning hole, use a pin of dimensions that do not require press fitting. The recommended tolerance of a pin is JIS tolerance m6 or less.
*2: Mount the rod side switch for the radial lead wire, as shown in the figure.
*3: Mount as shown in the figure for F2S and F3S switch specifications.

LCM
LCR
LCG
LCW
LCX
STM
STG
STS/STL
STR2
UCA2
ULK*
JSK/M2
JSG
JSC3/JSC4
USSD
UFCD
USC
UB
JSB3
LMB
LML
HCM
HCA
LBC
CAC4
UCAC2
CAC-N
UCAC-N
RCS2
RCC2
PCC
SHC
MCP
GLC
MFC
BBS
RRC
GRC
RV3*
NHS
HRL
LN
Hand
Chuk
MecHnd/Chuk
ShkAbs
FJ
FK
SpdContr
Ending

Dimensions (bore size: ø12)

● LCW-Q-12
Stroke length: 30 Piping direction: L

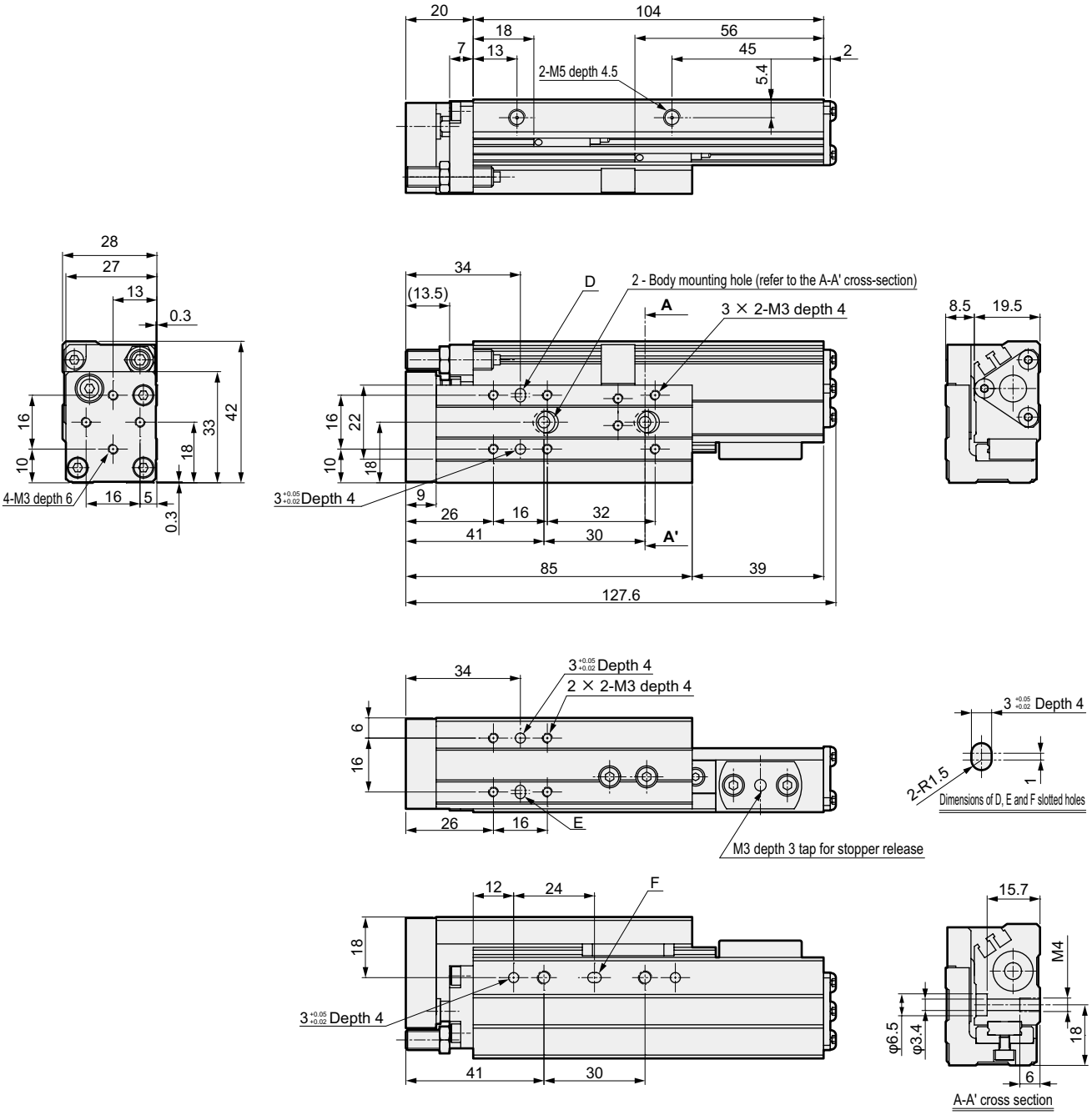

● Dimensions of protruding section when the F2S or F3S cylinder switch is mounted

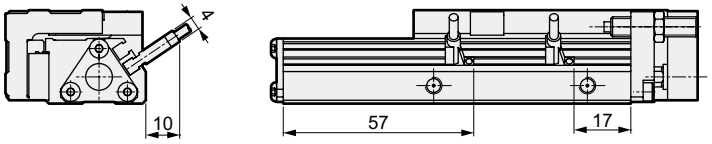

*1: When using a positioning hole, use a pin of dimensions that do not require press fitting. The recommended tolerance of a pin is JIS tolerance m6 or less.
*2: Mount the rod side switch for the radial lead wire, as shown in the figure.
*3: Mount as shown in the figure for F2S and F3S switch specifications.

Dimensions (bore size: ø12)

● LCW-Q-12
Stroke length: 50, 75 Piping direction: L
(Body mounting hole in the figure shows 75 mm stroke length)

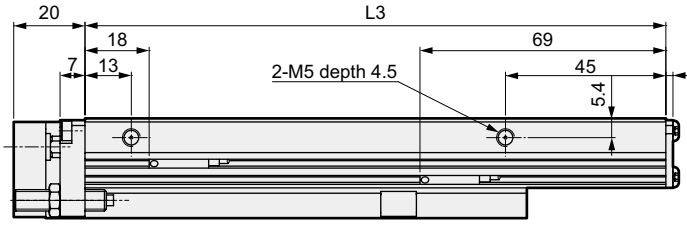

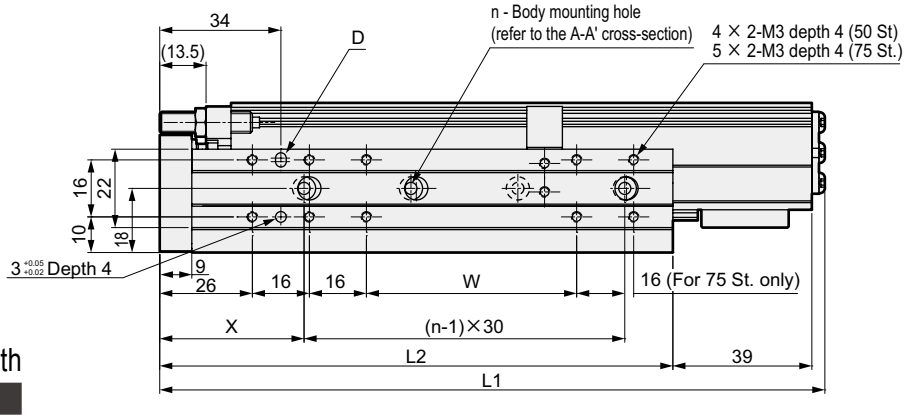

Dimensions by stroke length

Stroke length	50	75
L1	161.6	186.6
L2	119	144
L3	138	163
X	43	40.5
Y	50	53.5
W	50	59
n	3	4

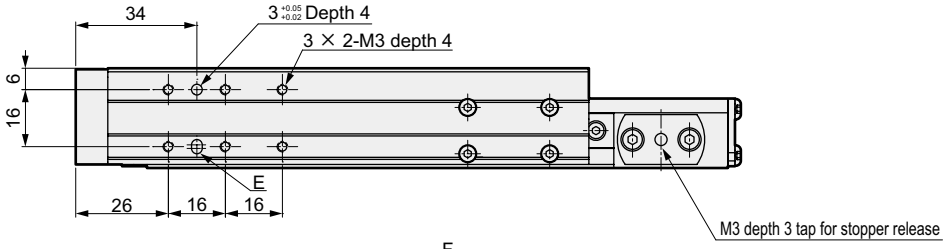

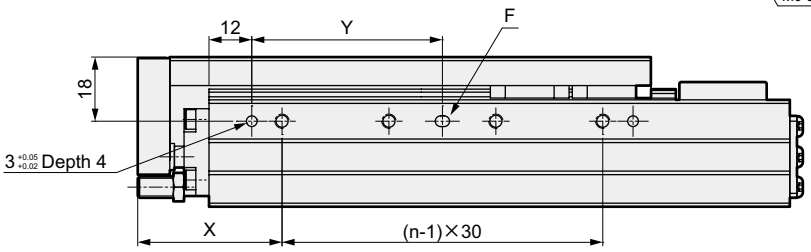

● Dimensions of protruding section when the F2S or F3S cylinder switch is mounted

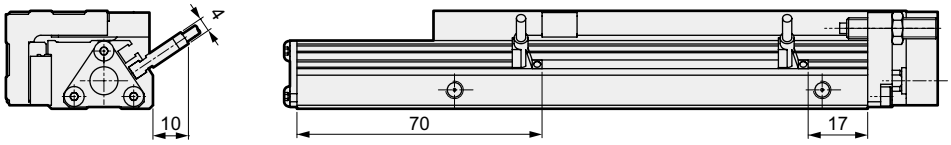

*1: When using a positioning hole, use a pin of dimensions that do not require press fitting. The recommended tolerance of a pin is JIS tolerance m6 or less.
*2: Mount the rod side switch for the radial lead wire, as shown in the figure.
*3: Mount as shown in the figure for F2S and F3S switch specifications.

Dimensions (bore size: ø16)

● LCW-Q-16
Stroke length: 30, 50 Piping direction: R
(Body mounting hole in the figure shows 30 mm stroke length)

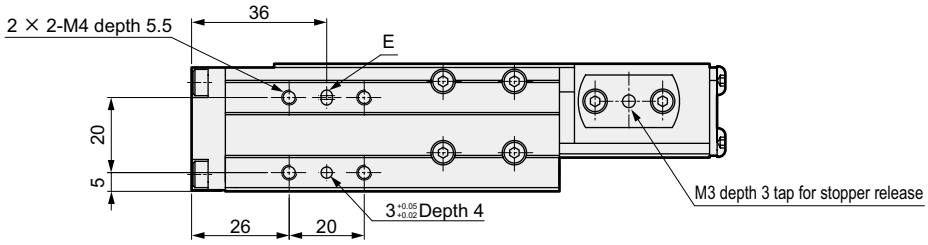

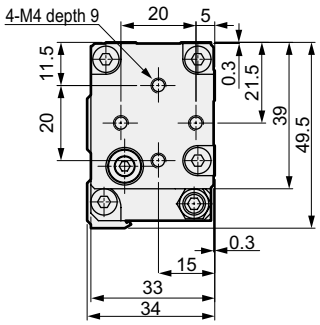

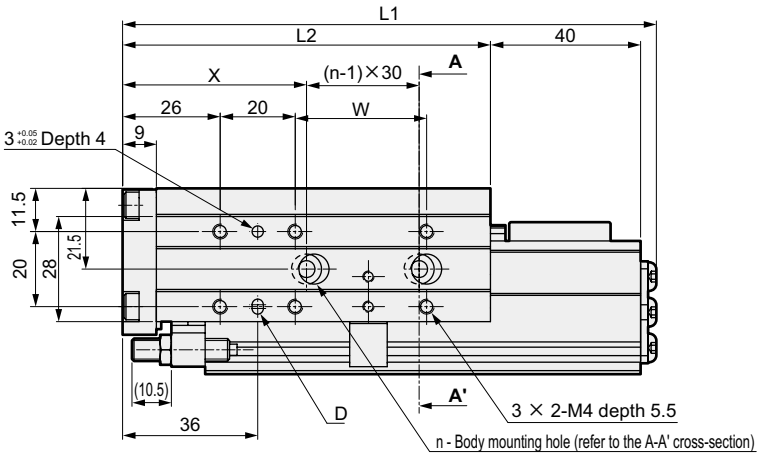

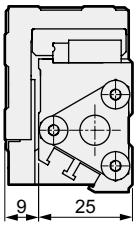

Dimensions by stroke length

Stroke length		30	50
L1		142.2	162.2
L2		98	118
L3		116	136
X		49	44
Y		28	50
W		35	55
n		2	3
T0/5* T2/3*	RD	15	
	HD	71	
T2/3W*	RD	17	
	HD	69	

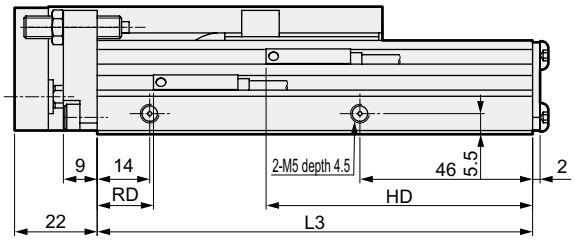

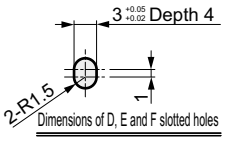

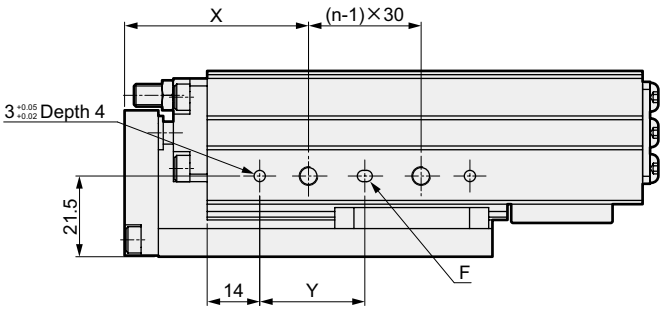

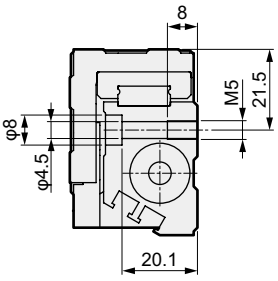

A-A' cross section

*1: When using a positioning hole, use a pin of dimensions that do not require press fitting. The recommended tolerance of a pin is JIS tolerance m6 or less.
*2: Mount the rod side switch for the radial lead wire, as shown in the figure.

Dimensions (bore size: ø16)

● LCW-Q-16
Stroke length: 75 Piping direction: R

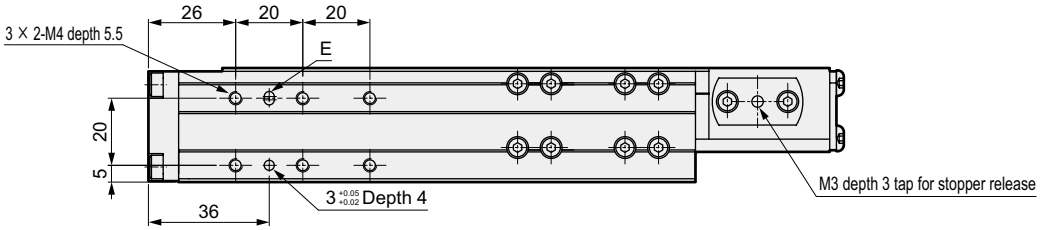

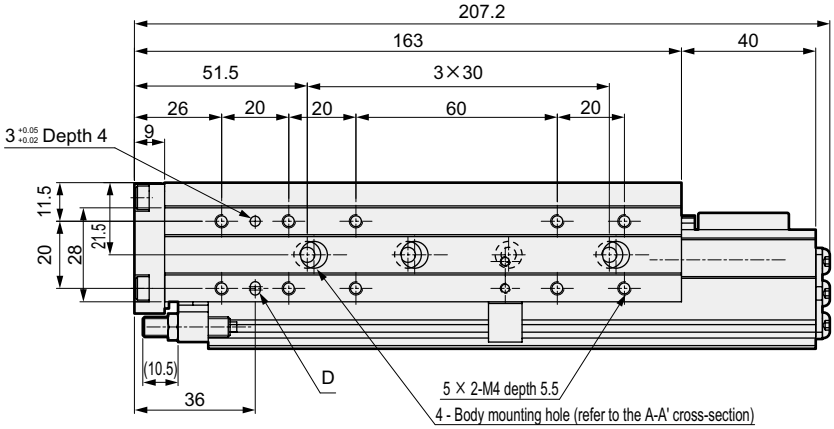

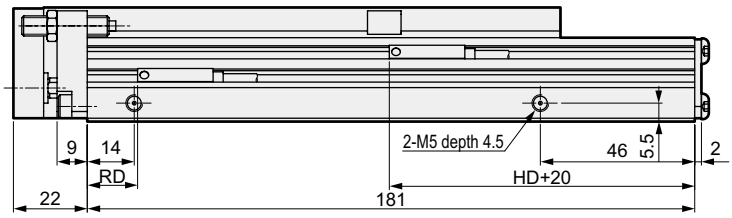

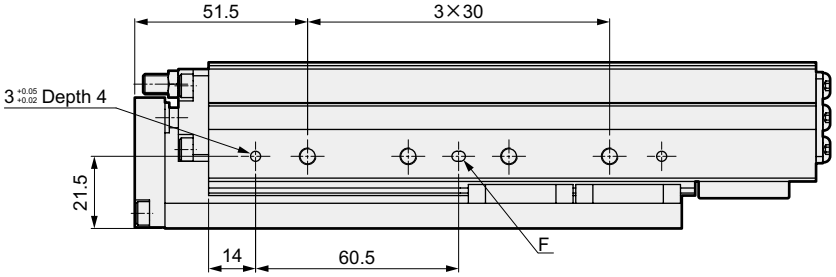

*1: When using a positioning hole, use a pin of dimensions that do not require press fitting. The recommended tolerance of a pin is JIS tolerance m6 or less.
*2: Mount the rod side switch for the radial lead wire, as shown in the figure.

LCM
LCR
LCG
LCW
LCX
STM
STG
STS/STL
STR2
UCA2
ULK*
JSK/M2
JSG
JSC3/JSC4
USSD
UFCD
USC
UB
JSB3
LMB
LML
HCM
HCA
LBC
CAC4
UCAC2
CAC-N
UCAC-N
RCS2
RCC2
PCC
SHC
MCP
GLC
MFC
BBS
RRC
GRC
RV3*
NHS
HRL
LN
Hand
Chuk
MecHnd/Chuk
ShkAbs
FJ
FK
SpdContr
Ending

Dimensions (bore size: ø16)

● LCW-Q-16
Stroke length: 30, 50 Piping direction: L
(Body mounting hole in the figure shows 30 mm stroke length)

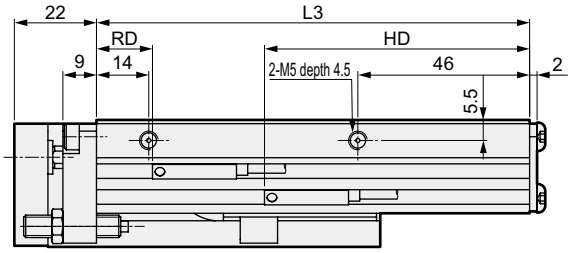

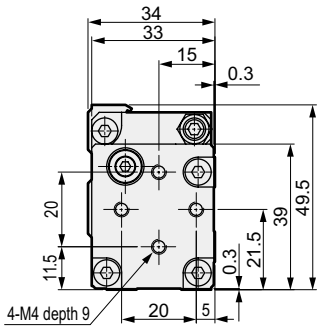

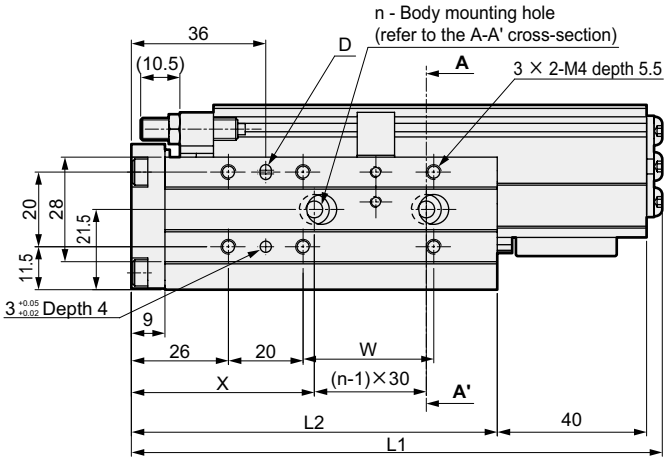

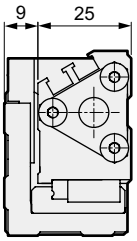

Dimensions by stroke length

Stroke length		30	50
L1		142.2	162.2
L2		98	118
L3		116	136
X		49	44
Y		28	50
W		35	55
n		2	3
T0/5* T2/3*	RD	15	
	HD	71	
T2/3W*	RD	17	
	HD	69	

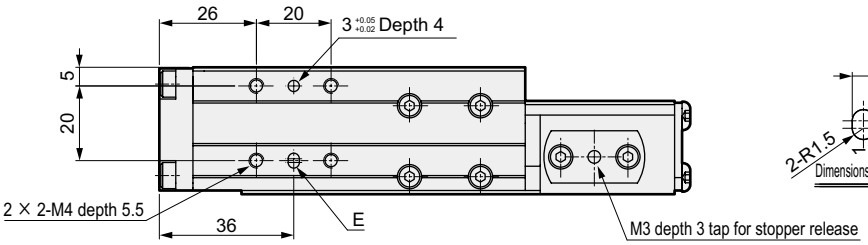

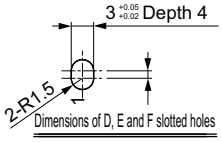

Dimensions of D, E and F slotted holes

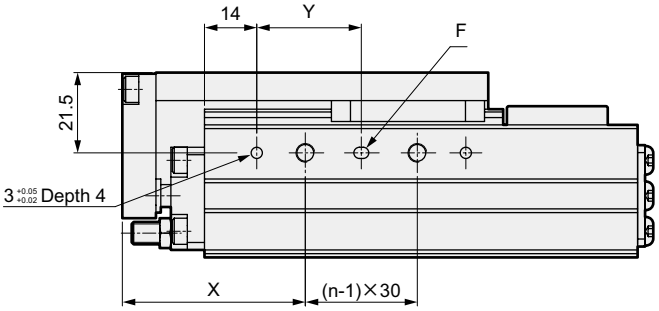

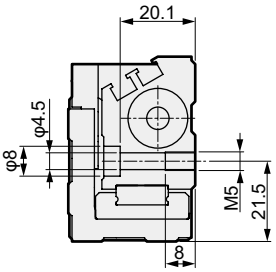

A-A' cross section

*1: When using a positioning hole, use a pin of dimensions that do not require press fitting. The recommended tolerance of a pin is JIS tolerance m6 or less.
*2: Mount the rod side switch for the radial lead wire, as shown in the figure.

LCM
LCR
LCG
LCW
LCX
STM
STG
STS/STL
STR2
UCA2
ULK*
JSK/M2
JSG
JSC3/JSC4
USSD
UFCD
USC
UB
JSB3
LMB
LML
HCM
HCA
LBC
CAC4
UCAC2
CAC-N
UCAC-N
RCS2
RCC2
PCC
SHC
MCP
GLC
MFC
BBS
RRC
GRC
RV3*
NHS
HRL
LN
Hand
Chuk
MecHnd/Chuk
ShkAbs
FJ
FK
SpdContr
Ending

Dimensions (bore size: ø16)

● LCW-Q-16
Stroke length: 75 Piping direction: L

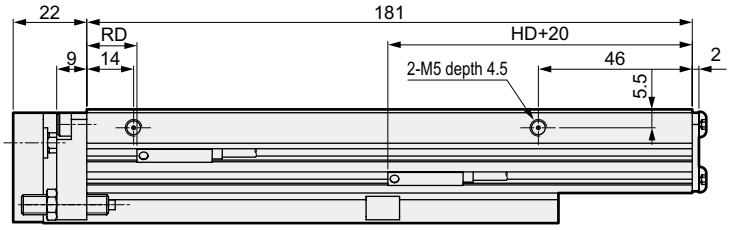

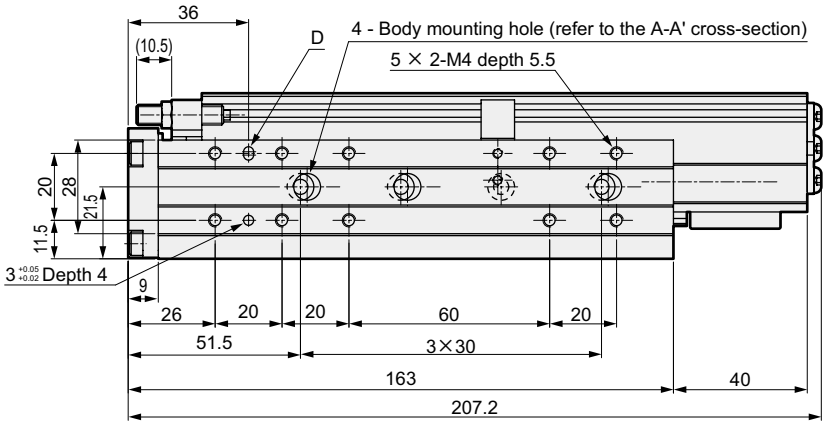

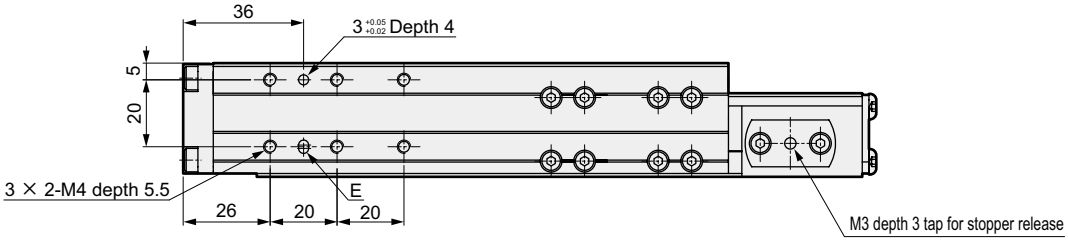

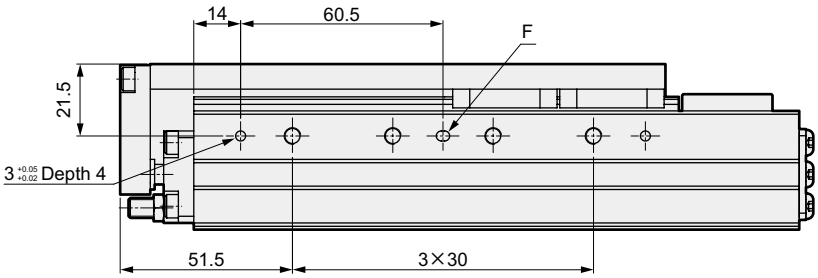

*1: When using a positioning hole, use a pin of dimensions that do not require press fitting. The recommended tolerance of a pin is JIS tolerance m6 or less.
*2: Mount the rod side switch for the radial lead wire, as shown in the figure.

LCM
LCR
LCG
LCW
LCX
STM
STG
STS/STL
STR2
UCA2
ULK*
JSK/M2
JSG
JSC3/JSC4
USSD
UFCD
USC
UB
JSB3
LMB
LML
HCM
HCA
LBC
CAC4
UCAC2
CAC-N
UCAC-N
RCS2
RCC2
PCC
SHC
MCP
GLC
MFC
BBS
RRC
GRC
RV3*
NHS
HRL
LN
Hand
Chuk
MecHnd/Chuk
ShkAbs
FJ
FK
SpdContr
Ending

Dimensions (bore size: ø20)

● LCW-Q-20
Stroke length: 30, 50 Piping direction: R
(Body mounting hole in the figure shows 30 mm stroke length)

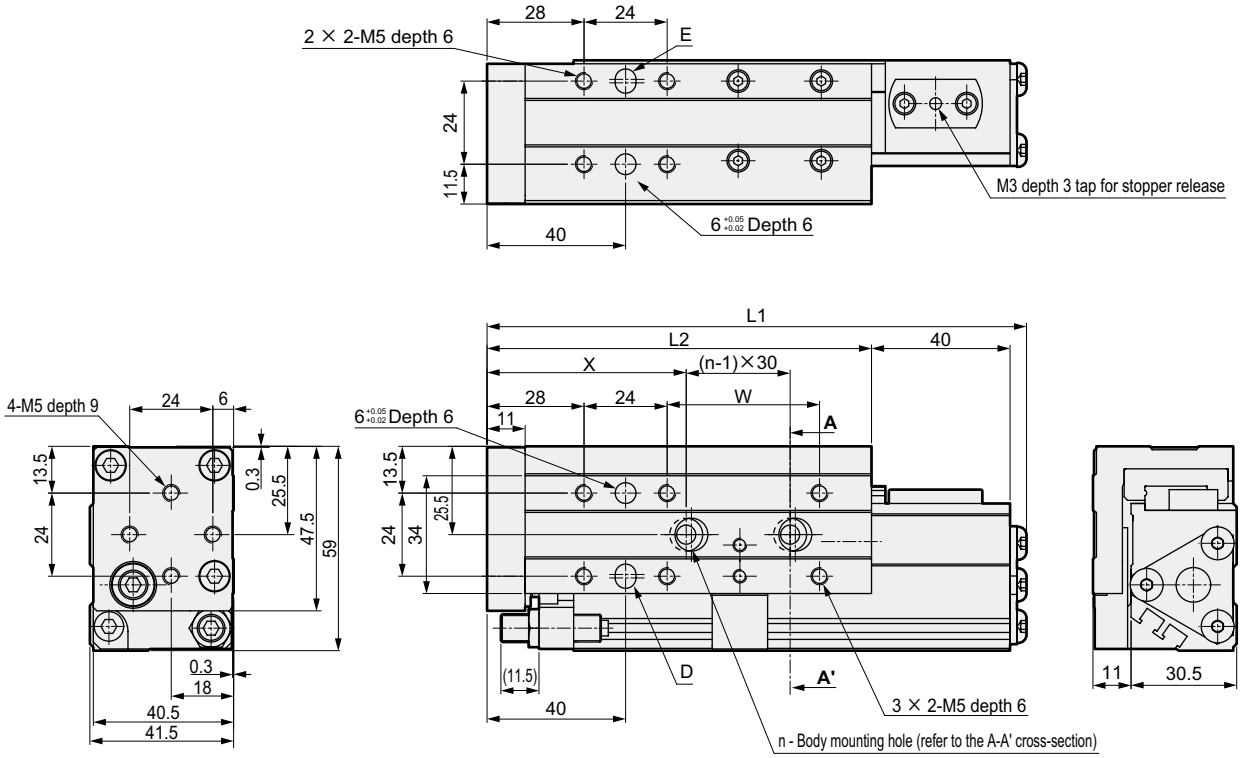

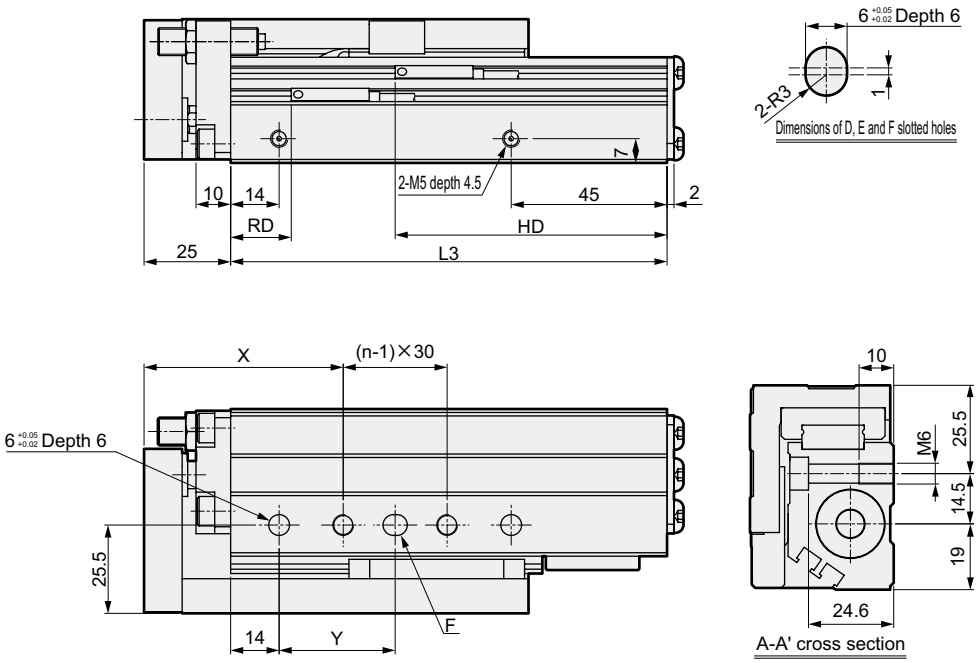

Dimensions by stroke length

Stroke length		30	50
L1		155.8	175.8
L2		111	131
L3		126	146
X		57.5	52.5
Y		33.5	60
W		44	64
n		2	3
T0/5* T2/3*	RD	17.5	
	HD	78.5	
T2/3W*	RD	19.5	
	HD	76.5	

*1: When using a positioning hole, use a pin of dimensions that do not require press fitting. The recommended tolerance of a pin is JIS tolerance m6 or less.
*2: Mount the rod side switch for the radial lead wire, as shown in the figure.

LCM
LCR
LCG
LCW
LCX
STM
STG
STS/STL
STR2
UCA2
ULK*
JSK/M2
JSG
JSC3/JSC4
USSD
UFCD
USC
UB
JSB3
LMB
LML
HCM
HCA
LBC
CAC4
UCAC2
CAC-N
UCAC-N
RCS2
RCC2
PCC
SHC
MCP
GLC
MFC
BBS
RRC
GRC
RV3*
NHS
HRL
LN
Hand
Chuk
MecHnd/Chuk
ShkAbs
FJ
FK
SpdContr
Ending

Dimensions (bore size: ø20)

● LCW-Q-20
Stroke length: 75 Piping direction: R

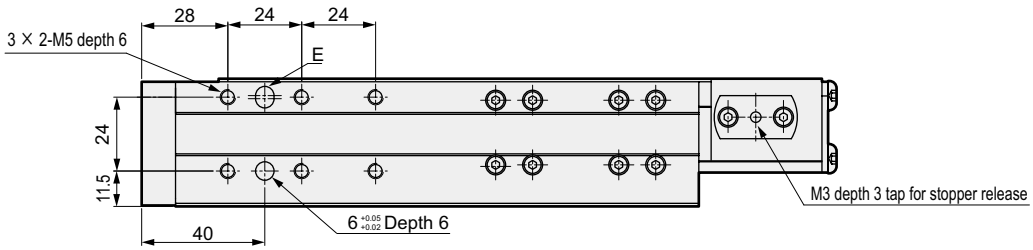

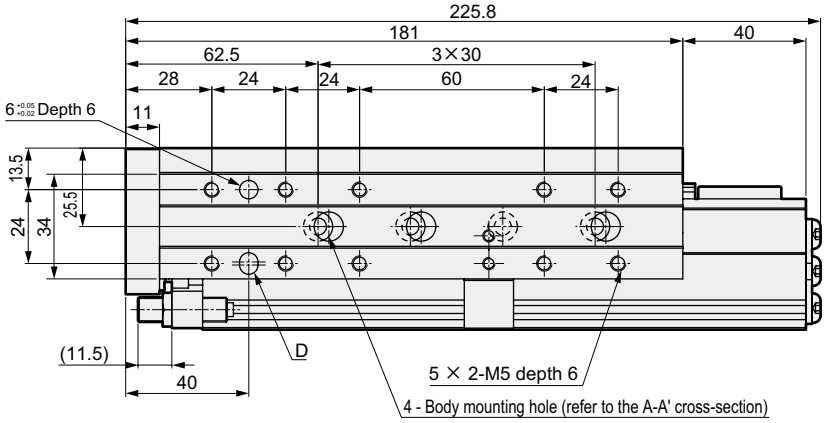

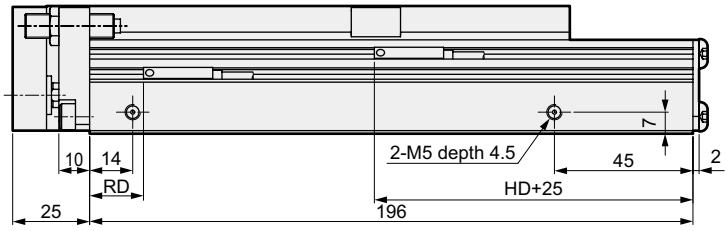

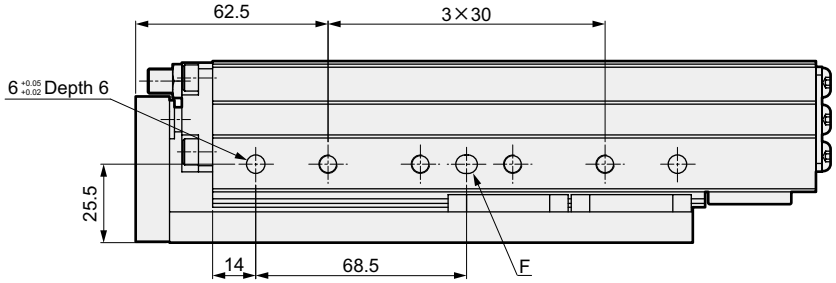

*1: When using a positioning hole, use a pin of dimensions that do not require press fitting. The recommended tolerance of a pin is JIS tolerance m6 or less.
*2: Mount the rod side switch for the radial lead wire, as shown in the figure.

LCM
LCR
LCG
LCW
LCX
STM
STG
STS/STL
STR2
UCA2
ULK*
JSK/M2
JSG
JSC3/JSC4
USSD
UFCD
USC
UB
JSB3
LMB
LML
HCM
HCA
LBC
CAC4
UCAC2
CAC-N
UCAC-N
RCS2
RCC2
PCC
SHC
MCP
GLC
MFC
BBS
RRC
GRC
RV3*
NHS
HRL
LN
Hand
Chuk
MecHnd/Chuk
ShkAbs
FJ
FK
SpdContr
Ending

Dimensions (bore size: ø20)

● LCW-Q-20
Stroke length: 30, 50 Piping direction: L
(Body mounting hole in the figure shows 30 mm stroke length)

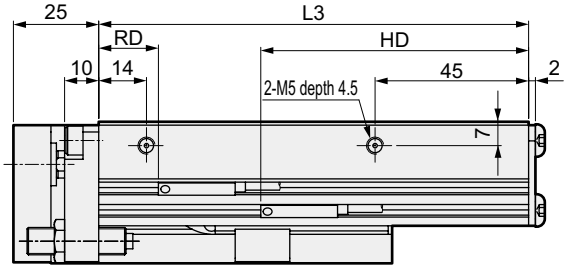

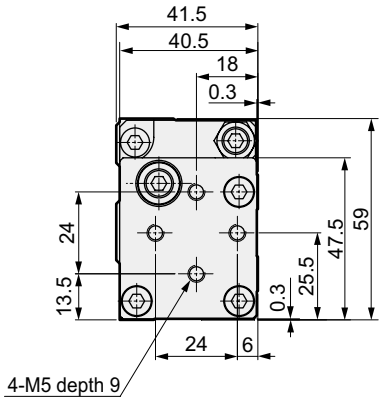

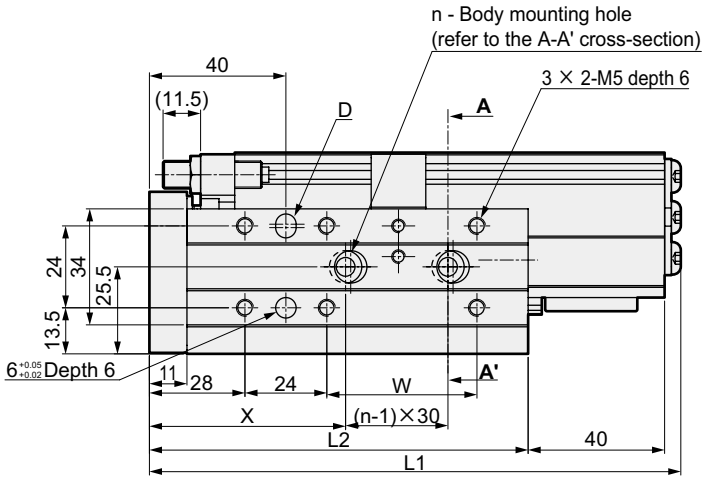

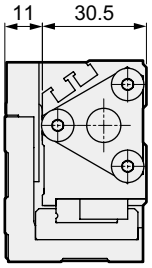

Dimensions by stroke length

Stroke length		30	50
L1		155.8	175.8
L2		111	131
L3		126	146
X		57.5	52.5
Y		33.5	60
W		44	64
n		2	3
T0/5* T2/3*	RD	17.5	
	HD	78.5	
T2/3W*	RD	19.5	
	HD	76.5	

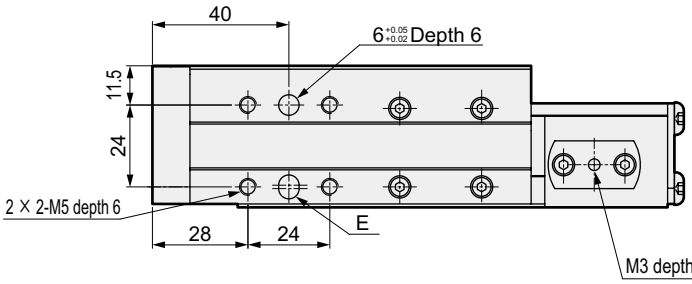

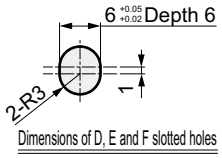

Dimensions of D, E and F slotted holes

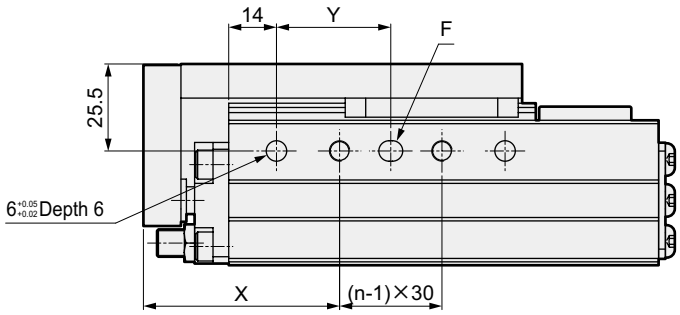

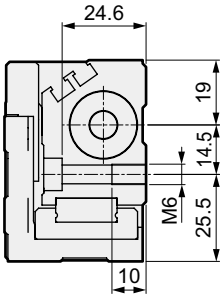

A-A' cross section

*1: When using a positioning hole, use a pin of dimensions that do not require press fitting. The recommended tolerance of a pin is JIS tolerance m6 or less.
*2: Mount the rod side switch for the radial lead wire, as shown in the figure.

LCM
LCR
LCG
LCW
LCX
STM
STG
STS/STL
STR2
UCA2
ULK*
JSK/M2
JSG
JSC3/JSC4
USSD
UFCD
USC
UB
JSB3
LMB
LML
HCM
HCA
LBC
CAC4
UCAC2
CAC-N
UCAC-N
RCS2
RCC2
PCC
SHC
MCP
GLC
MFC
BBS
RRC
GRC
RV3*
NHS
HRL
LN
Hand
Chuk
MecHnd/Chuk
ShkAbs
FJ
FK
SpdContr
Ending

Dimensions (bore size: ø20)

● LCW-Q-20
Stroke length: 75 Piping direction: L

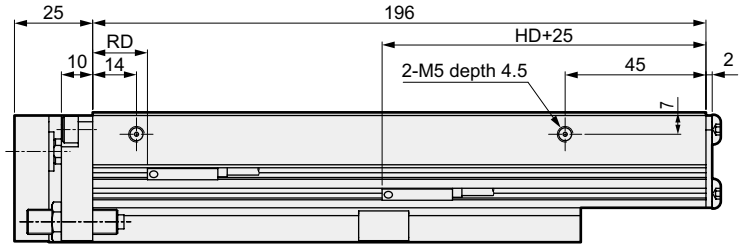

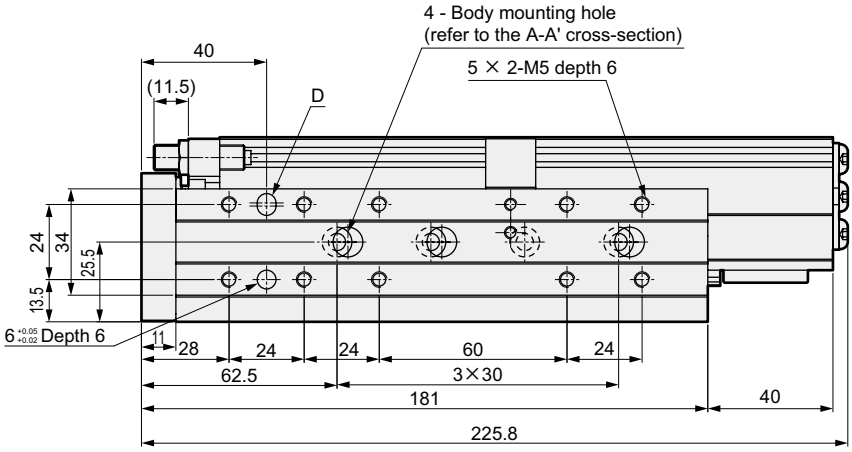

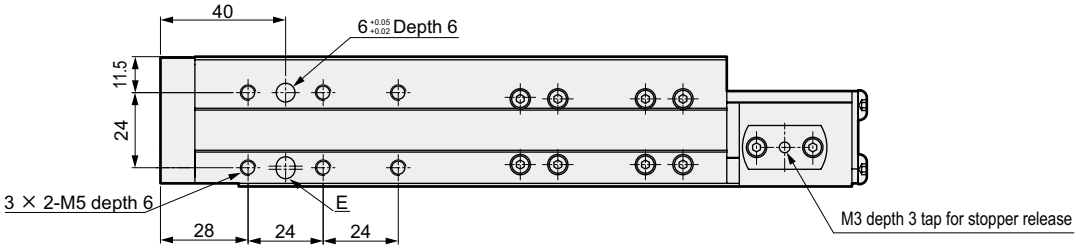

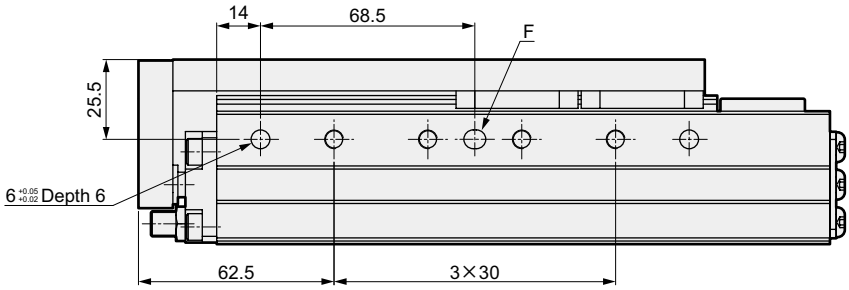

*1: When using a positioning hole, use a pin of dimensions that do not require press fitting. The recommended tolerance of a pin is JIS tolerance m6 or less.
*2: Mount the rod side switch for the radial lead wire, as shown in the figure.

Dimensions: Option

● Rubber cushion long stopper (S)
Metal long stopper with rubber cushion (MS)

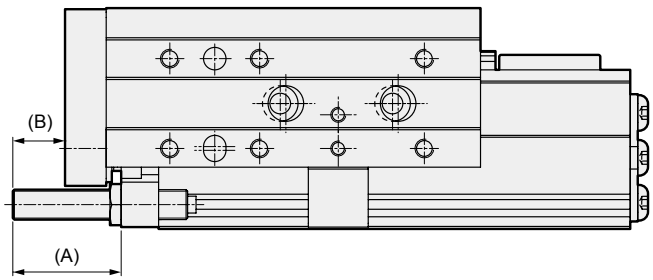

● Metal stopper with rubber cushion (M)

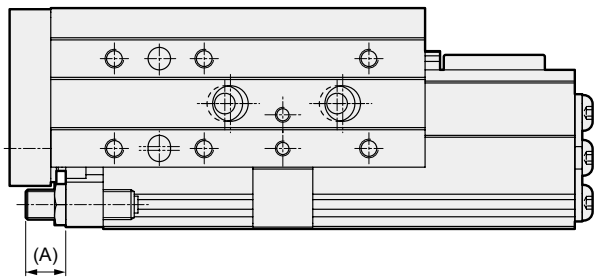

● Shock absorber stopper (A)

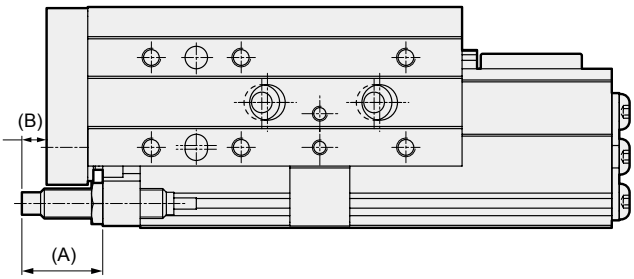

Bore size	Rubber cushion long stopper (S)		Metal stopper with rubber cushion (M)		Metal long stopper with rubber cushion (MS)		Shock absorber stopper (A)	
	A	B	A	B	A	B	A	B
ø12	31.5	18.5	12	-	31	18	11	-
ø16	28.5	15.5	9.5	-	28.5	15.5	8.5	-
ø20	28.5	13.5	10.5	-	28.5	13.5	21.5	6.5

MEMO

LCM
LCR
LCG
LCW
LCX
STM
STG
STS/STL
STR2
UCA2
ULK*
JSK/M2
JSG
JSC3/JSC4
USSD
UFCD
USC
UB
JSB3
LMB
LML
HCM
HCA
LBC
CAC4
UCAC2
CAC-N
UCAC-N
RCS2
RCC2
PCC
SHC
MCP
GLC
MFC
BBS
RRC
GRC
RV3*
NHS
HRL
LN
Hand
Chuk
MecHnd/Chuk
ShkAbs
FJ
FK
SpdContr
Ending

STEP 1

Calculate the load factor and decide the bore size.

$$\alpha = \frac{Fo}{F} \times 100\ [\%]$$

α : Load factor

Fo: Force (N) required to move the workpiece

F : Cylinder theoretical thrust (N) [Table 1]

For horizontal operation	For vertical operation
Fo = Fw	Fo = W + Fw
FW: W x 0.2 Note (N) W: Load (N)	

Note: Coefficient of friction

[Table 1] Theoretical thrust table (Unit: N)

Bore size (mm)	Operating direction	Working pressure MPa						
		0.15	0.2	0.3	0.4	0.5	0.6	0.7
ø12	PUSH	17	23	34	45	57	68	79
	PULL	13	17	25	34	42	51	59
ø16	PUSH	30	40	60	80	101	121	141
	PULL	26	35	52	69	86	104	121
ø20	PUSH	47	63	94	126	157	188	220
	PULL	40	53	79	106	132	158	185

[Table 2] Load factor guidelines

Working pressure MPa	Load factor (%)
0.2 to 0.3	α ≤ 40
0.3 to 0.6	α ≤ 50
0.6 to 0.7	α ≤ 60

STEP 2

Obtain the stroke end speed (Vm) and G coefficient.

Obtain the stroke end speed (Vm) and G coefficient from the average speed (Va) and load factor obtained in STEP 1.

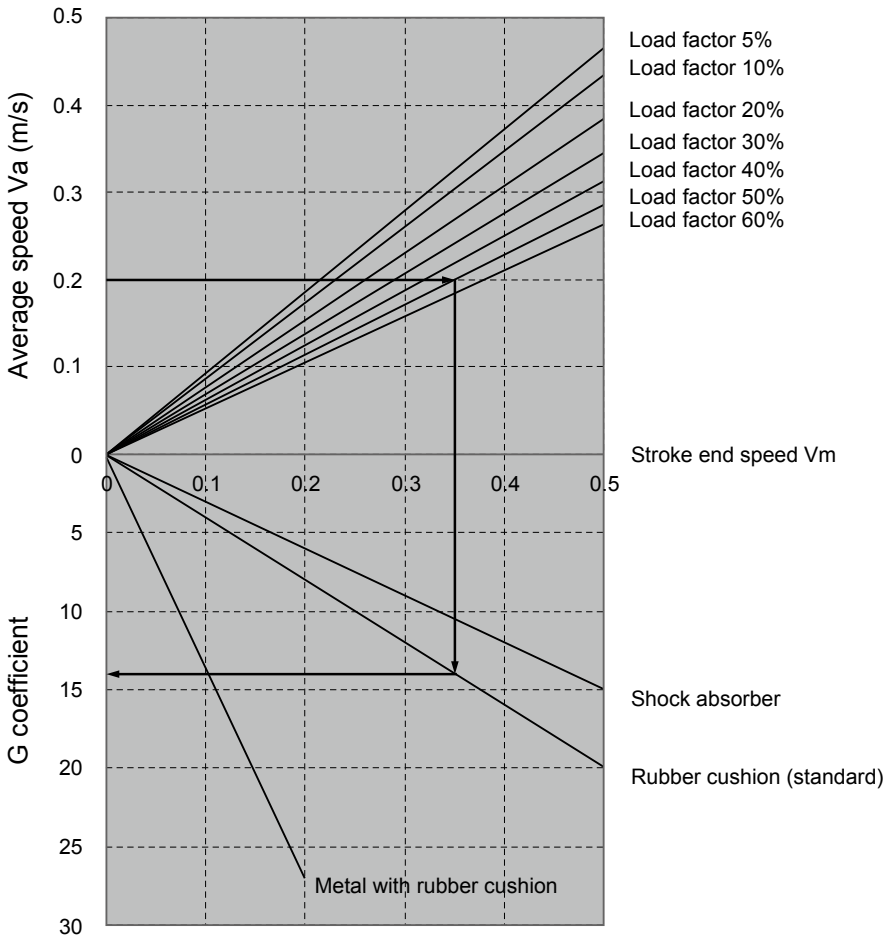

The arrows (→) in the figure show an example in which stroke end speed of 0.35 m/s and G coefficient of 14 are obtained at a 0.20 m/s average speed and 50% load factor.

LCM
LCR
LCG
LCW
LCX
STM
STG
STS/STL
STR2
UCA2
ULK*
JSK/M2
JSG
JSC3/JSC4
USSD
UFCD
USC
UB
JSB3
LMB
LML
HCM
HCA
LBC
CAC4
UCAC2
CAC-N
UCAC-N
RCS2
RCC2
PCC
SHC
MCP
GLC
MFC
BBS
RRC
GRC
RV3*
NHS
HRL
LN
Hand
Chuk
MecHnd/Chuk
ShkAbs
FJ
FK
SpdContr
Ending

STEP 3

Check the allowable absorbed energy.

$E = \frac{1}{2} \times (m + m_\alpha) \times Vm^2$

E : Kinetic energy at workpiece end (J)

m : Load weight (kg) ($m \approx \frac{W(N)}{9.8}$)

m_α : Table weight (from Table 4)

Vm : Stroke end speed (m/s)

E max : Max. allowable value of Eo (from Table 3)

Confirm E ≤ E max.

[Table 3] LCW allowable absorbed energy

Bore size (mm)	Rubber cushion (standard) (J)	Metal with rubber cushion (J)	Shock absorber (J)
ø12	0.027	0.0053	0.054
ø16	0.055	0.0053	0.11
ø20	0.11	0.043	0.22

[Table 4] Table weight (Unit: kg)

Bore size (mm)	Stroke length (mm)		
	30	50	75
ø12	0.059	0.089	0.111
ø16	0.089	0.112	0.164
ø20	0.141	0.176	0.264

STEP 4

Obtain M'T (resultant moment at rest).

Calculate the load (moment) and the moment of impact occurring at the stroke end and obtain M'T (resultant moment at rest).

● Vertical load: W' (N)

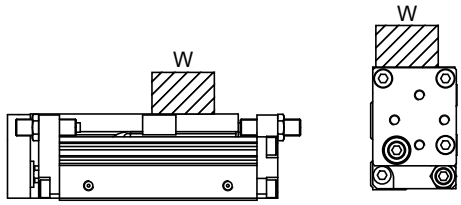

W' = W

● Bending moment: M1' (N·m)

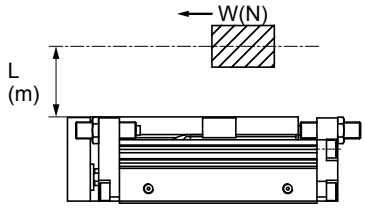

M1' = L × W

● Radial moment: M2' (N·m)

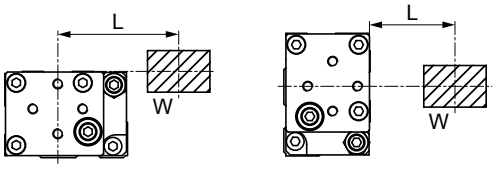

M2' = L × W

● Torsion moment: M3' (N·m)

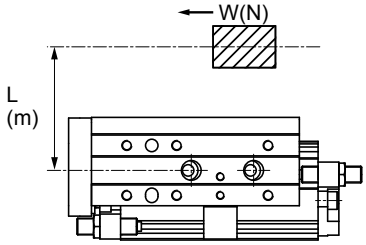

M3' = L × W

W' = ☐ (N)

M1' × G = ☐ (N·m)

M2' = ☐ (N·m)

M3' × G = ☐ (N·m)

$M'_T = \frac{W'}{W'max} + \frac{M1' \times G}{M1'max} + \frac{M2'}{M2'max} + \frac{M3' \times G}{M3'max} = \square$

M'T : Synthesis of moment

G : G coefficient

W'max : Max. allowable value of W' (from Table 5)

M1'max : Max. allowable value of M1' (from Table 5)

M2'max : Max. allowable value of M2' (from Table 5)

M3'max : Max. allowable value of M3' (from Table 5)

[Table 5] Allowable static load

Bore size (mm)	Stroke length (mm)	Vertical load W'max (N)	Bending moment M1'max (N·m)	Radial moment M2'max (N·m)	Torsion moment M3'max (N·m)
ø12	30	140	0.7	3.5	0.7
	50, 75	186	10.7	5.6	10.7
ø16	30, 50	221	5.7	9.8	5.7
	75		22.2		22.2
ø20	30, 50	381	17.8	19.2	17.8
	75		37.3		37.3

Confirm M'T ≤ 1.

LCM
LCR
LCG
LCW
LCX
STM
STG
STS/STL
STR2
UCA2
ULK*
JSK/M2
JSG
JSC3/JSC4
USSD
UFCD
USC
UB
JSB3
LMB
LML
HCM
HCA
LBC
CAC4
UCAC2
CAC-N
UCAC-N
RCS2
RCC2
PCC
SHC
MCP
GLC
MFC
BBS
RRC
GRC
RV3*
NHS
HRL
LN
Hand
Chuk
MecHnd/Chuk
ShkAbs
FJ
FK
SpdContr
Ending

STEP 5

Obtain MT (resultant moment during movement) (Note that it differs from that obtained in STEP 4.)

● Vertical load: W (N)

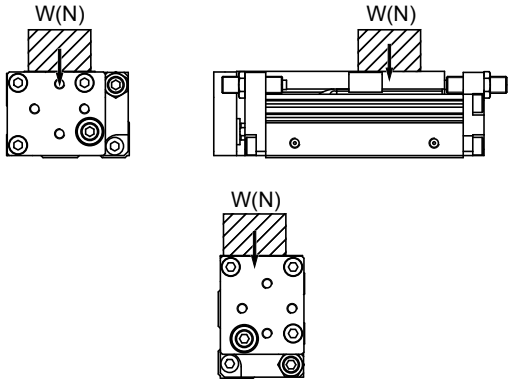

● Bending moment: M1 (N·m)

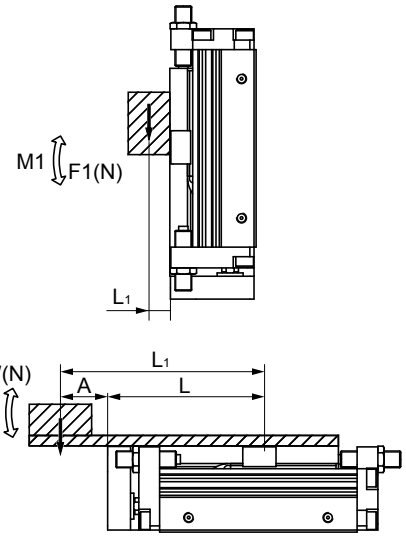

$M1=F1\times L_1$

$M1=W\times L_1$
$L_1=A+L$
L is value in table below

● Radial moment: M2 (N·m)

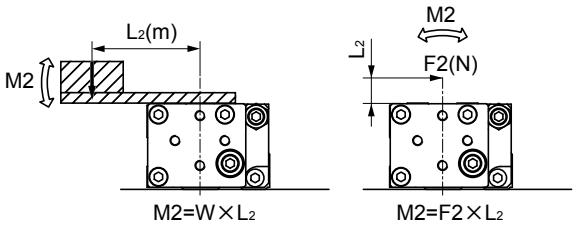

$M2=W\times L_2$ $M2=F2\times L_2$

● Torsion moment: M3 (N·m)

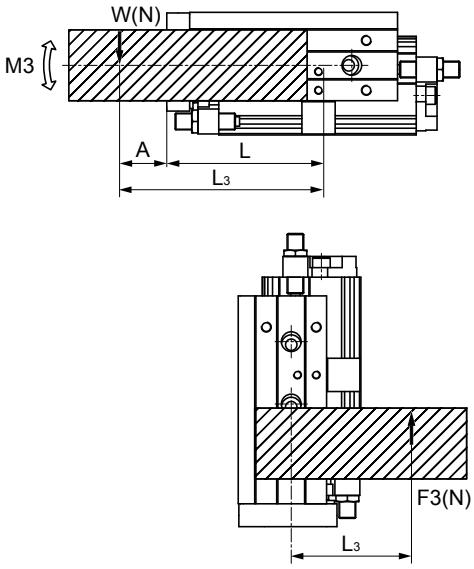

$M3=W\times L_3$
$L_3=A+L$
L is value in table below

$M3=F3\times L_3$

[Table 6] L value (Unit: m)

Bore size (mm)	Stroke length (mm)		
	30	50	75
ø12	0.066	0.097	0.122
ø16	0.077	0.097	0.131
ø20	0.085	0.105	0.141

W=W = ☐ (N)

M1=M1 = ☐ (N·m)

M2=M2 = ☐ (N·m)

M3=M3 = ☐ (N·m)

M_T : Synthesis of moment

Wmax : Max. allowable value of W (from Table 7)

M1max : Max. allowable value of M1 (from Table 7)

M2max : Max. allowable value of M2 (from Table 7)

M3max : Max. allowable value of M3 (from Table 7)

[Table 7] Allowable running load

Bore size (mm)	Stroke length (mm)	Vertical load Wmax (N)	Bending moment M1 max (N·m)	Radial moment M2 max (N·m)	Torsion moment M3 max (N·m)
ø12	30	14	0.17	0.35	0.17
	50, 75	16	0.89	0.47	0.89
ø16	30, 50	28	0.71	1.2	0.71
	75		2.2		2.2
ø20	30, 50	48	1.9	2.4	1.9
	75		4.6		4.6

Can be used when $M_T \leq 1$.

Table displacement

[Displacement of table due to M1, M2 and M3 moments]

M1 moment: Displacement at the table end when load (F1) is applied to the table end

M2 moment: Displacement at the table end (point A) when load (F2) is applied to a point L mm away from the center of the cylinder

M3 moment: Displacement angle of the table when rotation moment (M3) is applied to the cylinder

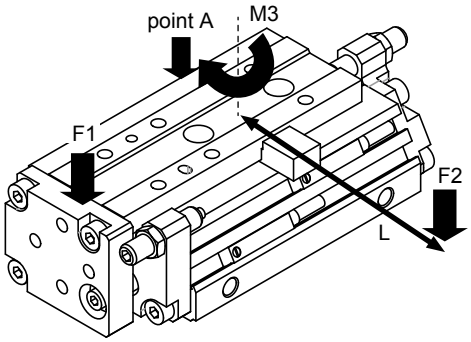

L value
ø12: L = 70
ø16: L = 90
ø20: L = 100

Displacement of table due to M1 moment

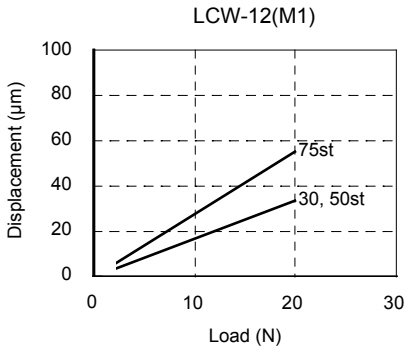

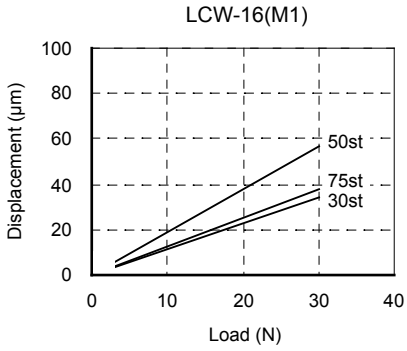

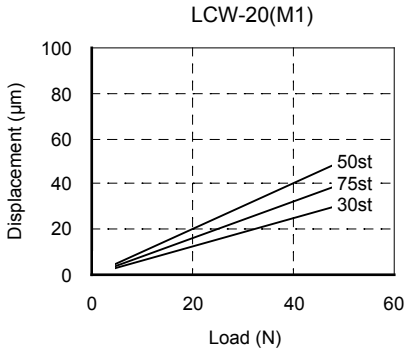

Displacement of table due to M2 moment

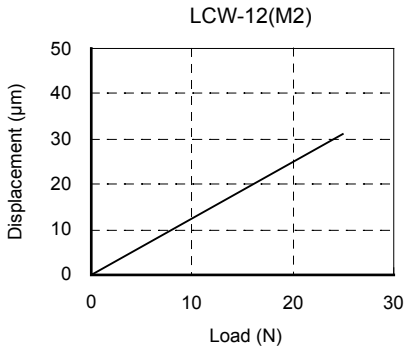

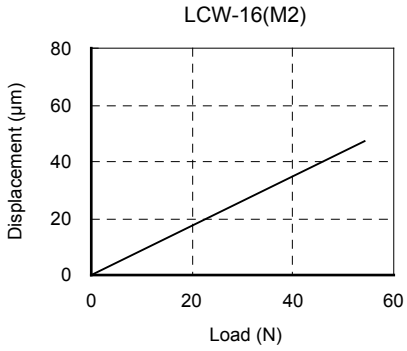

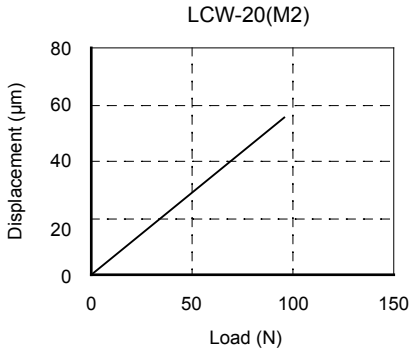

Displacement of table due to M3 moment

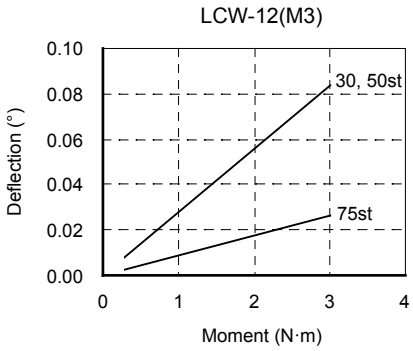

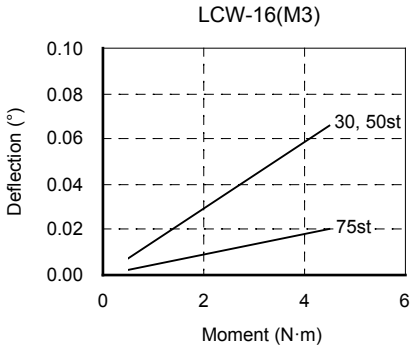

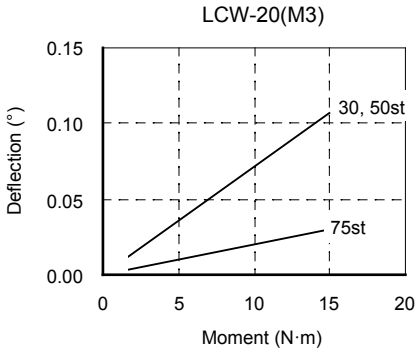

Pneumatic components

Safety Precautions

Be sure to read this section before use.

Refer to Intro Page 73 for general information of the cylinder, and to Intro Page 80 for general information of the cylinder switch.

Product-specific cautions: Linear slide cylinder LCW Series

Design/selection

1. Common

CAUTION

■ When selecting the cylinder, follow the "LCW selection guide" on pages 242 to 244.

■ Protect the cylinder with a cover to prevent damage and malfunction in a place where it is exposed to dripping water or oil, corrosive conditions or much dust.

■ Precautions for type with switch

- Mount one stroke length 30 switch per body groove.
- If using the radial lead wire (T□V, F□V), mount the rod side switch to the B groove in the figure below.

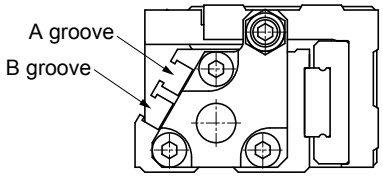

■ Avoid use in places subject to vibrations. The product will be adversely affected by vibration and operation will become unstable.

2. Position locking LCW-Q

CAUTION

■ Do not use 3-position valves.

Avoid using the cylinder in combination with 3-position (especially closed center metal seal) valves. If the port at the side where the lock mechanism is provided is pressurized, the lock cannot be engaged. Even if it is locked once, the air leaked from the valve enters the cylinder, and the lock may be released after a certain period of time.

Mounting, installation and adjustment

1. Common: when piping

CAUTION

■ Precautions for piping fittings

Be sure to attach a speed controller during piping before use. The available fittings are as below.

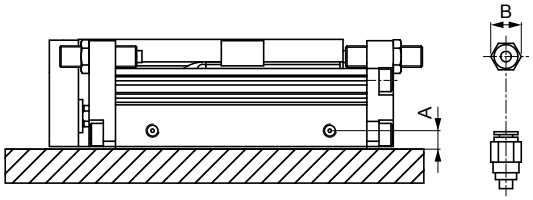

Item / Bore size (mm)	Port size	Port position dimension A	Applicable fitting	Fitting O.D. B
ø12	M5	5.5	SC3W-M5-4 SC3W-M5-6	ø11 or less
ø16		5.5	GWS4-M5-S GWS4-M5	ø11 or less
ø20		7	SC3W-M5-4 SC3W-M5-6 GWS4-M5-S GWS4-M5 GWL6-M5 GWS6-M5	ø13 or less

2. Common: when installing

CAUTION

■ Do not damage the surface flatness by denting or scratching the body (tube) mounting surface or the table surface.

In addition, ensure that the flatness of the mating surface for body and table mounting is 0.02 mm or less.

■ Observe the following bolt insertion lengths and tightening torque when mounting the body.

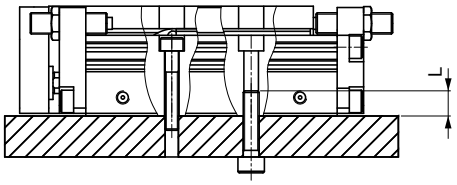

Item	1		2		
	Bolt used	Tightening torque (N·m)	Bolt used	Tightening torque (N·m)	Max. insertion depth L (mm)
LCW-12	M3×0.5	0.6 to 1.1	M4×0.7	1.4 to 2.4	6
LCW-16	M4×0.7	1.4 to 2.4	M5×0.8	2.9 to 5.1	8
LCW-20	M5×0.8	2.9 to 5.1	M6×1.0	4.8 to 8.6	10

Mounting, installation and adjustment

■ Observe the following bolt insertion lengths and tightening torque when installing the jig on the slide table or end plate.

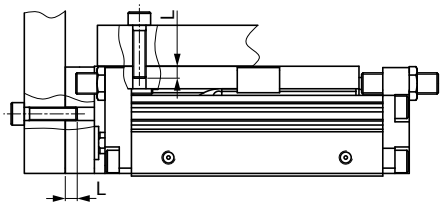

Item	Table			End plate		
	Bolt used	Tightening torque (N·m)	Screw insertion length L (mm)	Bolt used	Tightening torque (N·m)	Screw insertion depth L (mm)
LCW-12	M3×0.5	0.6	3 to 4	M3×0.5	0.6	4.5 to 6
LCW-16	M4×0.7	1.4	4 to 5.5	M4×0.7	1.4	6 to 9
LCW-20	M5×0.8	2.9	5 to 6	M5×0.8	2.9	7.5 to 9

■ Observe the following tightening torque of the stopper bolt mounting nut.

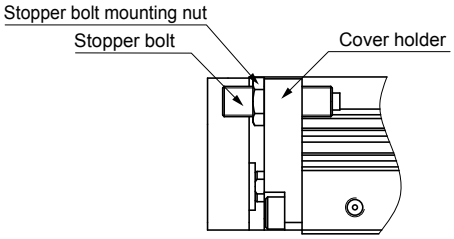

LCW-12, LCW-16 : 0.6 to 1.0 N·m
LCW-20 : 1.2 to 2.0 N·m

■ Do not use the stopper bolt when removed from the cover holder. It may cause damage.

■ Do not bring your hands near the body during operation, as they may get pinched by the stopper bolt.

■ When attaching or detaching the workpiece to/from the slide table and end plate, be sure to keep the slide table itself retained.

■ CKD's shock absorber is a repair part. Replace it when the energy absorption performance has degraded or the operation is not smooth.

■ The cylinder switch may malfunction if there is a magnetic substance such as a metal plate installed adjacently. To ensure safe operation, keep it 10 mm and over away from the cylinder surface or change the installation surface of the cylinder switch. (Common for all port sizes)

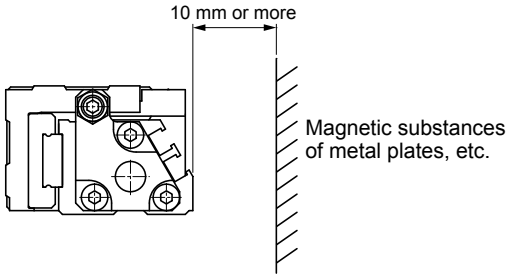

■ The cylinder switches may accidentally function if the cylinders are close to each other as shown in the figure below. Keep the distance below between the surfaces of the cylinders. (Common for all port sizes)

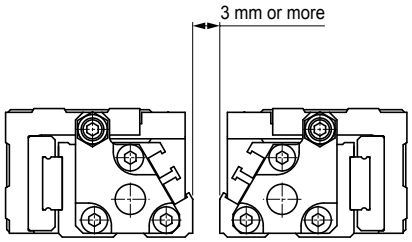

■ When using a positioning hole, use a pin of dimensions that do not require press fitting. If a pin is press fitted, the load of press fitting may damage or distort the linear guide, lowering the accuracy. The recommended tolerance of a pin is JIS tolerance m6 or less.

3. Position locking LCW-Q

⚠ CAUTION

■ The locking mechanism works at the stroke end. If the stopper is engaged on the way of the stroke by the external stopper, the locking mechanism may not work and the piston could fall. When setting a load, make sure to check that the lock mechanism functions before installing the product.

■ Supply pressure equal to or higher than the min. working pressure to the port on the lock mechanism side for each model.

■ When the piping at the side where the lock mechanism is provided is long and thin, or when the speed controller is far away from the cylinder port, note that it takes time to engage the lock. Clogging in the silencer mounted on the EXH. port of the solenoid valve may also cause the same result.

Use/maintenance

1. Common

CAUTION

■ Apply grease to the guide rail every six months or when the number of operation times reaches one million, whichever is earlier.
(For information on recommended grease, contact CKD separately.)

■ When disassembling the end plate during packing replacement, be sure to keep the slide table itself retained.

2. Position locking LCW-Q

WARNING

■ If pressure is supplied to port Ⓐ when both ports are not pressurized and the piston is locked, the lock may not be released or the piston rod may suddenly pop out just after the lock is released. This can be extremely hazardous. To release the lock mechanism, make sure to supply pressure to port Ⓑ. Check that load is not applied to the lock mechanism.

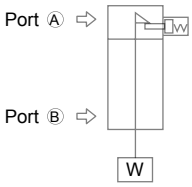

Side where the lock mechanism is not provided.

■ For usage where the drop rate is increased using the quick exhaust valve, the lock may not release normally because the cylinder body starts operating before the lock pin. For the position locking cylinder, do not use the quick exhaust valve.

CAUTION

■ If back pressure is applied to the locking mechanism, the lock may be released. Use a single solenoid valve, or an individual exhaust manifold.

■ After the locking mechanism is manually operated, make sure to return the locking mechanism to the original state before use. Do not perform manual operation except for adjustment, as it is dangerous.

■ When mounting or adjusting the cylinder, release the lock.
If mounting work, etc., is done while the lock is engaged, the lock part may be damaged.

■ Do not use multiple synchronized cylinders.
Do not use so that 1 workpiece is moved by synchronizing 2 or more position locking cylinders. Lock release may fail for one of the cylinders.

■ Use the speed controller with meter-out.
If the meter-in control is used, the lock may not be able to be released.

■ At the side where the lock mechanism is attached, be sure to use the cylinder from the stroke end.
If the cylinder piston does not reach the stroke end, the lock may not be engaged or the lock may not be able to be released.

■ How to unlock
By screwing the hexagon socket head cap screw (M3 x 20) into the stopper piston and pulling the bolt 3 mm with force of 20 N or more, the stopper piston moves and the lock is released. (when horizontally installed with no load and with the rod port pressurized). When the screw is released, the internal spring returns the stopper piston. When the stopper piston fits in the piston rod groove, the cylinder is locked.

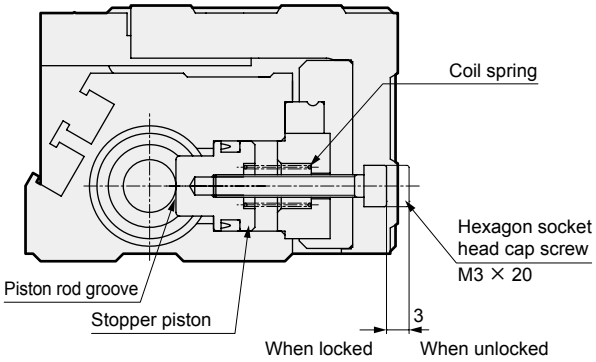

LCX

Linear slide cylinder

ø25/ø32

Combined functions cylinder

Overview

Thin, light, rigid linear slide cylinder.
Perfect for narrow spaces.

CONTENTS

Product introduction 250
Series variation 252

- Double acting/single rod (LCX) 254
- Double acting/position locking (LCX-Q) 264
- Double acting/single rod/clean-room specifications (LCX-P7*) 270
- Double acting/single rod/long stroke (LCX-*L) 276
- Double acting/position locking/long stroke (LCX-Q-*L) 286
- Double acting/single rod/clean-room specifications/long stroke (LCX-*L-P7*) 292

Selection guide 298
⚠ Safety precautions 306

Thin, light, rigid LCX Series

A wide variety of option variations are available for use in more applications.

Thin

About 50% thinner than the conventional model (LCG).
The height **reduced from 60 mm to 34 mm**.
The extremely thin body can fit in narrow spaces.

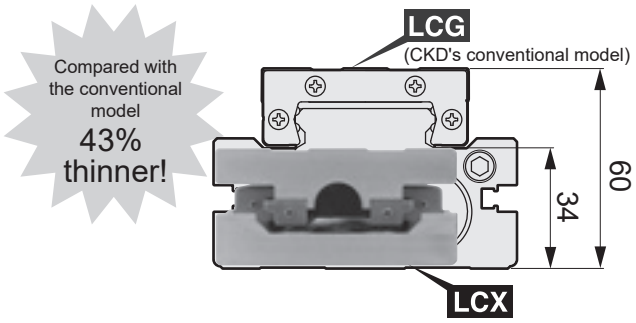

Lightweight

50% lighter than the conventional model (LCG).
The moving part becomes lighter and thus enables efficient, energy-saving equipment.

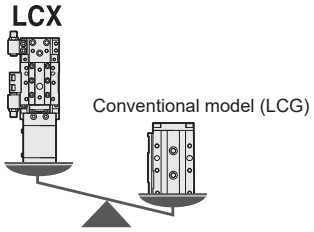

Rigid

The separated linear guide provides **the same level of rigidity as the conventional model (LCG)**, even with the thin and light body.

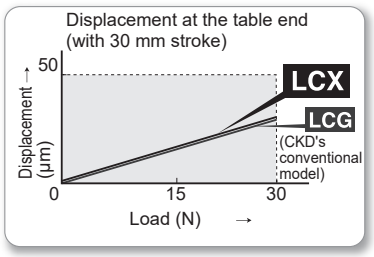

A wide range of variations

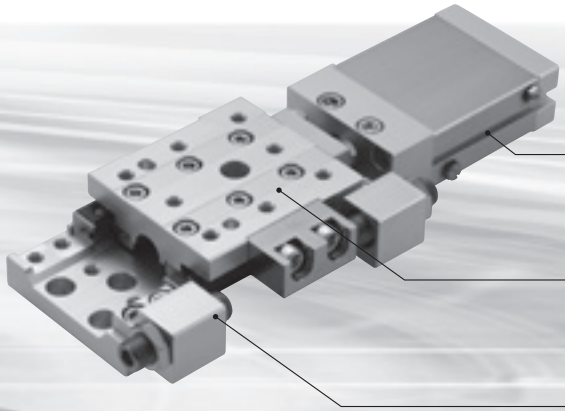

■ Laterally symmetrical
Pipes and stoppers can be installed on both the right and left sides.
⬅ shows the piping direction.

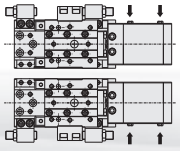

■ Compatible with T-switch
The proximity 2-color LED switch is available.

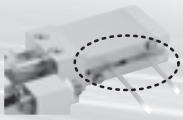

■ Anti-rust
Anti-rust treated as standard.

■ Different types of stoppers

■ Metal stopper

■ Rubber cushion stopper

■ Shock absorber stopper

LCX Series

Linear slide cylinder

Integrated units - simple, secure, high precision

Components can be combined as desired. Select from various options such as the position locking, long stroke (max. 150 mm) and type with a positioning hole. Use the integrated units in a wide range of uses including conveyor and positioning so as to improve productivity of multiple products.

High precision positioning mechanism

Components can be simply combined with high precision positioning holes and a special bolt **for positioning**. Adjusting the positions is not necessary.

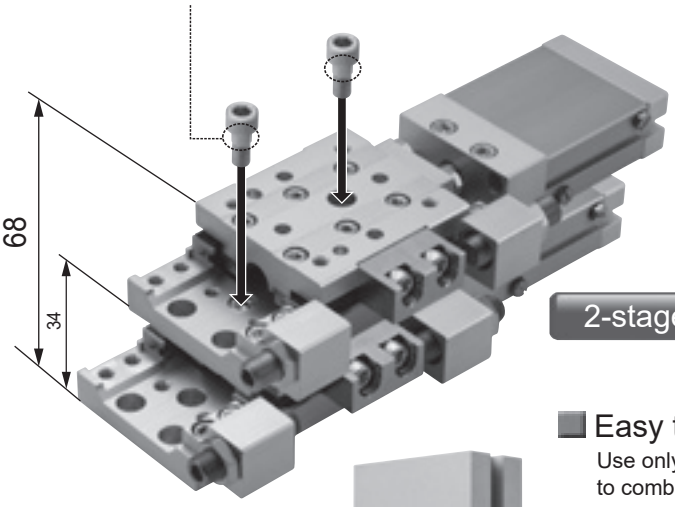

2-stage unit

Only 68 mm even when components are stacked

Direct mount without connecting plates enables thin profile design.

Easy to install

Use only an Allen wrench to combine the components.

Rigid, wide guide

42 mm wide rail fits inside.

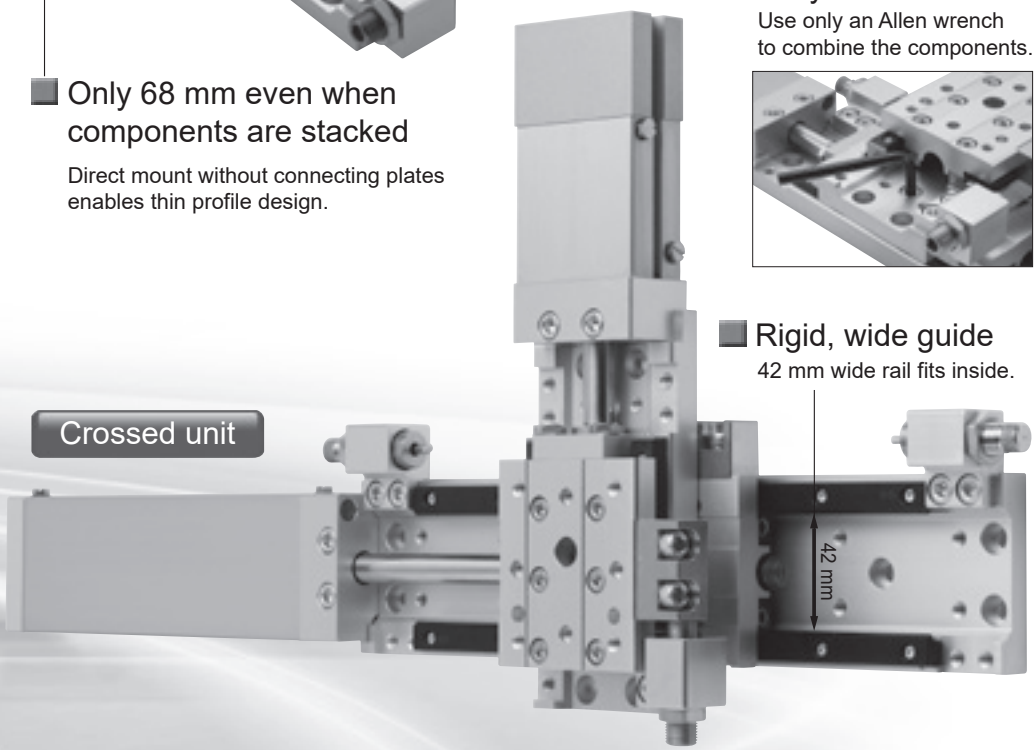

Crossed unit

Large reduction in maintenance time

The cylinder can be replaced with the body installed on the equipment.

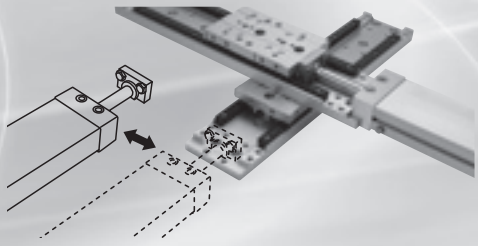

LCX product variations

LCX

Double acting/ single rod

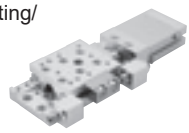

ø 25, ø 32
Stroke: 10 to 50 mm

LCX-Q

Double acting/ position locking

ø 25, ø 32
Stroke: 10 to 50 mm

LCX-P7*

Double acting/single rod
Clean room specifications

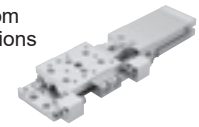

ø 25, ø 32
Stroke: 10 to 50 mm

LCX-*L

Double acting/single rod
Long stroke

ø 25, ø 32
Stroke: 75 to 150 mm

LCX-Q*L

Double acting/ position locking
Long stroke

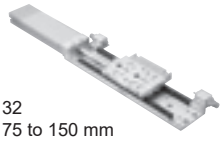

ø 25, ø 32
Stroke: 75 to 150 mm

LCX-*L-P7*

Double acting/single rod/ clean room specifications
Long stroke

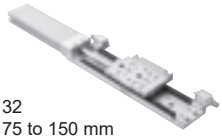

ø 25, ø 32
Stroke: 75 to 150 mm

Series variation

Linear slide cylinder LCX Series

Variation	Model No. JIS symbol	Bore size (mm)	Stroke length (mm)								
			10	20	30	40	50	75	100	125	150
Double acting/single rod	LCX 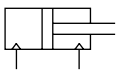	ø25/ø32	●	●	●	●	●				
Double acting/position locking	LCX-Q 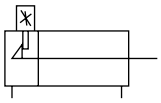	ø25/ø32	●	●	●	●	●				
Double acting/single rod clean-room specifications	LCX-P7* 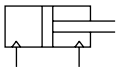	ø25/ø32	●	●	●	●	●				
Double acting/single rod long stroke length	LCX-*L 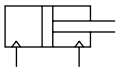	ø25/ø32						●	●	●	●
Double acting/position locking long stroke length	LCX-Q-*L 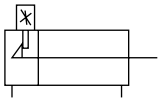	ø25/ø32						●	●	●	●
Double acting/single rod clean-room specifications long stroke length	LCX-*L-P7* 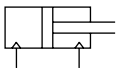	ø25/ø32						●	●	●	●

●: Standard ◎: Option ○ : Made to order : Not available

	Option																					
	Cushion stopper						Metal stopper						Shock absorber stopper									
	Stopper position ①	Stopper position ②	Stopper position ③	Stopper position ④	Stopper position ①/③	Stopper position ②/④	Stopper position ①	Stopper position ②	Stopper position ③	Stopper position ④	Stopper position ①/③	Stopper position ②/④	Stopper position ①	Stopper position ②	Stopper position ③	Stopper position ④	Stopper position ①/③	Stopper position ②/④	With positioning hole	Center stopper	Switch	Page
	S1	S2	S3	S4	S5	S6	M1	M2	M3	M4	M5	M6	A1	A2	A3	A4	A5	A6	E	*1		
	◎	◎	◎	◎	◎	◎	◎	◎	◎	◎	◎	◎	◎	◎	◎	◎	◎	◎	◎	○	◎	254
	◎	◎					◎	◎					◎	◎					◎	○	◎	264
	◎	◎	◎	◎	◎	◎	◎	◎	◎	◎	◎	◎							◎	○	◎	270
	◎	◎	◎	◎	◎	◎	◎	◎	◎	◎	◎	◎	◎	◎	◎	◎	◎	◎	●	○	◎	276
	◎	◎					◎	◎					◎	◎					●	○	◎	286
	◎	◎	◎	◎	◎	◎	◎	◎	◎	◎	◎	◎							●	○	◎	292

*1: The center stopper is a made-to-order product. Contact CKD for details.

● Stopper position

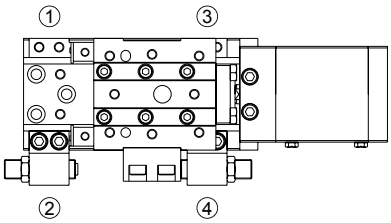

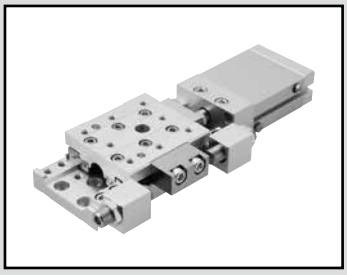

Linear slide cylinder Double acting/single rod

LCX Series

● Bore size: ø25/ø32

JIS symbol 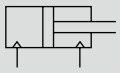

Specifications

Item	LCX	
Bore size mm	ø25	ø32
Actuation	Double acting	
Working fluid	Compressed air	
Max. working pressure MPa	0.7 (≈100 psi, 7 bar)	
Min. working pressure MPa	0.15 (≈22 psi, 1.5 bar)	
Proof pressure MPa	1.05 (≈150 psi, 10.5 bar)	
Ambient temperature °C	-10 (14°F) to 60 (140°F) (no freezing) (*1)	
Port size	M5	
Stroke tolerance mm	$^{+2.0}_{0}$ (*2)	
Working piston speed mm/s	20 to 500 (*3)	
Cushion	With rubber cushion	
Lubrication	Not available	
Allowable absorbed energy J	Refer to Table 3 on page 299.	

*1: Contact CKD if the use environment is always cold (5°C or below) or hot (40°C and above).
*2: Note that there will be a slight gap between the plate and floating bush if no stopper is attached.
*3: Keep within 20 to 200 mm/s when using a metal stopper.

Stroke length

Bore size (mm)	Standard stroke length (mm)
ø25	10, 20, 30, 40, 50
ø32	10, 20, 30, 40, 50

Note: Products with stroke lengths other than the above are not available.

Theoretical thrust table

Refer to page 298.

LCM
LCR
LCG
LCW
LCX
STM
STG
STS/STL
STR2
UCA2
ULK*
JSK/M2
JSG
JSC3/JSC4
USSD
UFCD
USC
UB
JSB3
LMB
LML
HCM
HCA
LBC
CAC4
UCAC2
CAC-N
UCAC-N
RCS2
RCC2
PCC
SHC
MCP
GLC
MFC
BBS
RRC
GRC
RV3*
NHS
HRL
LN
Hand
Chuk
MecHnd/Chuk
ShkAbs
FJ
FK
SpdContr
Ending

Switch specifications

Item	Reed 2-wire				Proximity 2-wire		Proximity 3-wire		
	T0H/T0V		T5H/T5V		T2H/T2V	T2WH/ T2WV	T3H/ T3V	T3PH/ T3PV	T3WH/ T3WV
Applications	For programmable controller, relay		For programmable controller, relay, IC circuit (without indicator lamp), serial connection		Dedicated for programmable controller		For programmable controller, relay		
Output method	-		-		-		NPN output	PNP output	NPN output
Power supply voltage	-		-		-		10 to 28 VDC		
Load voltage	12/24 VDC	110 VAC	5/12/24 VDC	110 VAC	10 to 30 VDC	24 VDC ±10%	30 VDC or less		
Load current	5 to 50 mA	7 to 20 mA	50 mA or less	20 mA or less	5 to 20 mA		100 mA or less		50 mA or less
Indicator lamp	LED (Lit when ON)		Without indicator lamp		LED (Lit when ON)	Red/green LED (Lit when ON)	LED (Lit when ON)	Yellow LED (Lit when ON)	Red/green LED (Lit when ON)
Leakage current	0 mA				1 mA or less		10 μA or less		
Weight g	1 m:18 3 m:49 5 m:80								

*1 : Refer to Ending Page 1 for detailed switch specifications and dimensions.
*2 : Switches other than the above models, such as switches with connectors, are also available. Refer to Ending Page 1.
*3 : The max. load current is 20 mA at 25°C. The current is lower than 20 mA if the operating ambient temperature around the switch is higher than 25°C. (5 to 10 mA at 60°C)

Cylinder weight

● Basic (Unit: g)

Bore size (mm)	Basic Stroke length (mm)				
	10	20	30	40	50
ø25	980	1,010	1,030	1,150	1,170
ø32	1,000	1,030	1,050	1,180	1,200

● Additional weight of options (Unit: g)

Bore size (mm)	Option/stopper code					
	S1 to S4	M1 to M4	A1 to A4	S5/S6	M5/M6	A5/A6
ø25	170			240		
ø32						

Specifications for rechargeable battery (Catalog No. CC-1226A)

LCX - … - P4*

●Design compatible with rechargeable battery manufacturing process.

* Contact CKD for details.

How to order

Without switch (built-in magnet for switch)

LCX - 25 - 40 ——— S5 E

With switch (built-in magnet for switch)

LCX - 25 - 40 - T2H* - R - A1T E

Model No.

Ⓐ Bore size

Ⓑ Stroke length

Ⓒ Switch model No.

Ⓓ Switch quantity

Ⓔ Stopper

Ⓕ Option

Code	Description
Ⓐ Bore size	
25	ø25
32	ø32
Ⓑ Stroke length (mm)	
10	10
20	20
30	30
40	40
50	50

Ⓒ Switch model No.

Axial lead wire	Radial lead wire	Contact	Voltage AC	Voltage DC	Indicator lamp	Lead wire
T0H*	**T0V***	Reed	●	●	1-color display	2-wire
T5H*	**T5V***		●	●	no indicator lamp	
T2H*	**T2V***	Proximity		●	1-color display	2-wire
T3H*	**T3V***			●		3-wire
T3PH*	**T3PV***			●	1-color display (PNP output)	3-wire
T2WH*	**T2WV***			●	2-color display	2-wire
T3WH*	**T3WV***			●		3-wire

* Lead wire length	
Blank	1 m (standard)
3	3 m (option)
5	5 m (option)

Ⓓ Switch quantity	
R	1 on rod side
H	1 on head side
D	2

Ⓔ Stopper		
Blank	Without stopper	
S Cushion stopper		***1, *4**
S1*	Stopper position ① (can be changed to ④)	Stopper installation position
S2*	Stopper position ② (can be changed to ③)	
S3*	Stopper position ③ (can be changed to ②)	
S4*	Stopper position ④ (can be changed to ①)	
S5*	Stopper position ①,③	
S6*	Stopper position ②,④	
M Metal stopper		***1, *3, *4, *5**
M1*	Stopper position ① (can be changed to ④)	Stopper installation position
M2*	Stopper position ② (can be changed to ③)	
M3*	Stopper position ③ (can be changed to ②)	
M4*	Stopper position ④ (can be changed to ①)	
M5*	Stopper position ①,③	
M6*	Stopper position ②,④	
A Shock absorber stopper		***2, *4, *7**
A1*	Stopper position ① (can be changed to ④)	Stopper installation position
A2*	Stopper position ② (can be changed to ③)	
A3*	Stopper position ③ (can be changed to ②)	
A4*	Stopper position ④ (can be changed to ①)	
A5*	Stopper position ①,③	
A6*	Stopper position ②,④	
*** part**		
Blank	Stopper block material: steel	
T	Stopper block material: steel (nitriding)	*6

Ⓕ Option		
Blank	No option	
E	With positioning hole	*8

⚠ Precautions for model No. selection

*1 : To change the adjustable stroke length, use the discrete rubber cushion stopper or metal stopper on page 258.
*2 : For the adjustable stroke range with a shock absorber stopper, refer to the stopper dimensions table on page 263.
*3 : The steel stopper block (nitrided) (code: T) is recommended for a metal stopper.
*4 : Combination of the rubber cushion stopper, metal stopper and shock absorber stopper is made to order.
*5 : Keep within 20 to 200 mm/s when using a metal stopper.
*6 : Can be selected for the type with stopper only.
7 : A5 and A6* cannot be selected for 10 mm stroke length.
*8 : The positioning hole enables assembling of the crossed unit and two-stage unit without adjusting the position. Use a positioning bolt as well (page 259).
*9 : Refer to page 259 for single cylinder model No.

[Example of model No.]

LCX-25-40-T2H-R-A1TE

Model: Linear slide cylinder
double acting/single rod LCX

Ⓐ Bore size : ø25
Ⓑ Stroke length : 40 mm
Ⓒ Switch model No. : Proximity/2-wire
Axial lead wire
Ⓓ Switch quantity : 1 on rod side
Ⓔ Stopper : Shock absorber stopper
Stopper position①
Material, steel (nitriding)
Ⓕ Option : With positioning hole

● Stopper position

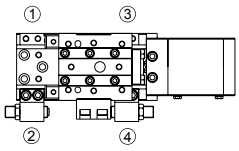

LCM
LCR
LCG
LCW
LCX
STM
STG
STS/STL
STR2
UCA2
ULK*
JSK/M2
JSG
JSC3/JSC4
USSD
UFCD
USC
UB
JSB3
LMB
LML
HCM
HCA
LBC
CAC4
UCAC2
CAC-N
UCAC-N
RCS2
RCC2
PCC
SHC
MCP
GLC
MFC
BBS
RRC
GRC
RV3*
NHS
HRL
LN
Hand
Chuk
MecHnd/Chuk
ShkAbs
FJ
FK
SpdContr
Ending

How to order switch

SW - T2H3

Switch model No.
(Item Ⓒ on page 256)

How to order a stopper set

- Set of a stopper and rubber cushion stopper, metal stopper or shock absorber stopper
- Use when changing from the standard to the type with rubber cushion stopper, metal stopper or shock absorber stopper.

LCX - 25 - S 2 - S02

Bore size
(Item Ⓐ on page 256)

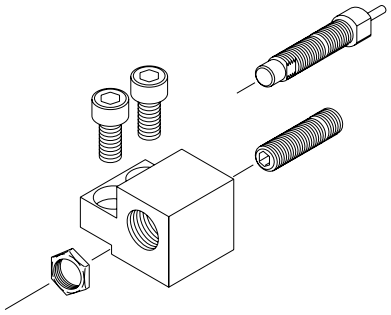

Ⓐ Stopper	
S	Cushion stopper
M	Metal stopper
A	Shock absorber stopper

Ⓑ Stopper installation position	
1	Stopper position for ① or ④
2	Stopper position for ② or ③

Ⓒ Adjustable stroke length	*1
Blank	Adjustable stroke range 10 mm
S02	Adjustable stroke range 20 mm

*1: Cannot be selected for the shock absorber stopper “A”.

(Unit: g)

Model No.				Weight
LCX	25 32	S1	Blank	70
		S2	S02	80
		M1	Blank	70
		M2	S02	80
		A1 A2	-	70

LCM
LCR
LCG
LCW
LCX
STM
STG
STS/STL
STR2
UCA2
ULK*
JSK/M2
JSG
JSC3/JSC4
USSD
UFCD
USC
UB
JSB3
LMB
LML
HCM
HCA
LBC
CAC4
UCAC2
CAC-N
UCAC-N
RCS2
RCC2
PCC
SHC
MCP
GLC
MFC
BBS
RRC
GRC
RV3*
NHS
HRL
LN
Hand
Chuk
MecHnd/Chuk
ShkAbs
FJ
FK
SpdContr
Ending

How to order discrete rubber cushion stopper

- Hexagon socket set screw with urethane
- Use when changing the adjustable stroke range or when using a custom stroke length.

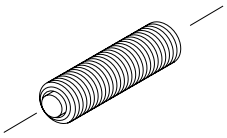

LCX - 25 - S02

Bore size
(Item Ⓐ on page 256)

Ⓐ Adjustable stroke range	
S01	Single side 10 mm (standard)
S02	Single side 20 mm

(Unit: g)

Model No.			Weight
LCX	25	S01	30
	32	S02	40

How to order discrete metal stopper

- Use when changing the adjustable stroke range or when using a custom stroke length.

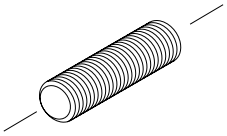

LCX - 25 - M02

Bore size
(Item Ⓐ on page 256)

Ⓐ Adjustable stroke range	
M01	Single side 10 mm (standard)
M02	Single side 20 mm

(Unit: g)

Model No.			Weight
LCX	25	M01	30
	32	M02	40

How to order discrete shock absorber stopper

- Set of a shock absorber and stopper cap
- Use when changing from the rubber cushion stopper or metal stopper to the shock absorber stopper.

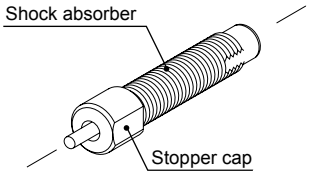

LCX - 25 - A01

Bore size
(Item Ⓐ on page 256)

Note: For the adjustable stroke range with a shock absorber stopper, refer to page 263.

Applicable shock absorber model No.

Model	Shock absorber model No.
LCX-25	NCK-00-1.2
LCX-32	NCK-00-1.2

(Unit: g)

Model No.			Weight
LCX	25 32	A01	30

LCM
LCR
LCG
LCW
LCX
STM
STG
STS/STL
STR2
UCA2
ULK*
JSK/M2
JSG
JSC3/JSC4
USSD
UFCD
USC
UB
JSB3
LMB
LML
HCM
HCA
LBC
CAC4
UCAC2
CAC-N
UCAC-N
RCS2
RCC2
PCC
SHC
MCP
GLC
MFC
BBS
RRC
GRC
RV3*
NHS
HRL
LN
Hand
Chuk
MecHnd/Chuk
ShkAbs
FJ
FK
SpdContr
Ending

How to order discrete stopper block

● Use when changing from the standard to the type with rubber cushion stopper, metal stopper or shock absorber stopper.

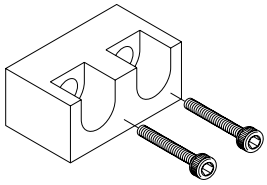

LCX - 25 - SB1 T

Bore size
(Item Ⓐ on page 256)

Ⓐ Stopper block	
SB1	For 30, 50 mm stroke length
SB2	For 10, 20, 40 mm stroke length

Ⓑ Material	
Blank	Stopper block material: steel
T	Stopper block material: steel (nitriding)

(Unit: g)

Model No.			Weight
LCX	25	SB1(T)	80
	32	SB2(T)	100

How to order positioning bolt

● Hexagon socket head cap screw for positioning
● Enables assembling of the crossed unit and two-stage unit without adjusting the position.

LCX - 25 - J

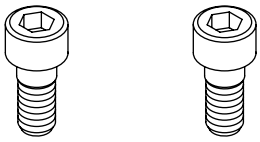

(2 pieces/set)

(Unit: g)

Model No.			Weight
LCX	25	J	10

* Weight per set (2 pieces)

How to order single cylinder

LCX - CYL - 25 - 40

Bore size
(Item Ⓐ on page 256)

Stroke length
(Item Ⓑ on page 256)

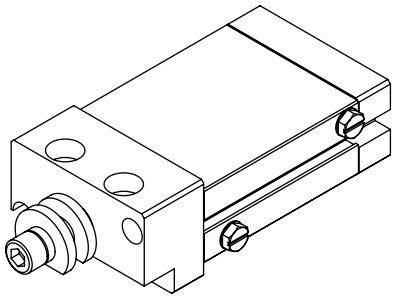

Internal structure and parts list

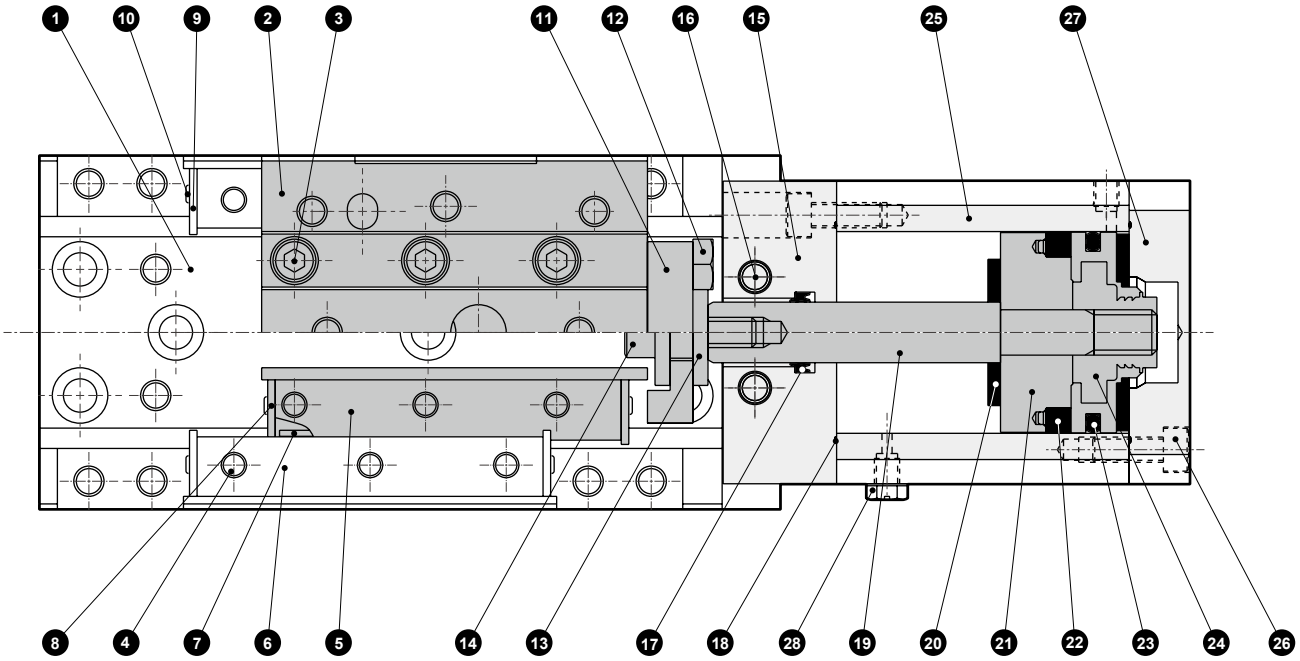

Parts list

No.	Part name	Material	Remarks	No.	Part name	Material	Remarks
1	Base	Aluminum alloy	Alumite	15	Rod cover	Aluminum alloy	Alumite
2	Table	Aluminum alloy	Alumite	16	Hexagon socket head cap screw	Alloy steel	Zinc chromate
3	Hexagon socket head cap screw	Stainless steel		17	Rod packing	Nitrile rubber	
4	Hexagon socket head cap screw	Stainless steel		18	Gasket	Nitrile rubber	
5	Guide rail (1)	Alloy steel	Black chromium film	19	Piston rod	Alloy steel	Industrial chrome plating
6	Guide rail (2)	Alloy steel	Black chromium film	20	Cushion rubber	Urethane rubber	
7	Cage	Resin		21	Spacer	Aluminum alloy	
8	Stopper (1)	Stainless steel		22	Magnet	Plastic	
9	Stopper (2)	Stainless steel		23	Piston packing	Nitrile rubber	
10	Phillips pan head machine screw	Stainless steel		24	Piston	Aluminum alloy + polyacetal	
11	Plate	Aluminum alloy	Alumite	25	Cylinder body	Aluminum alloy	Hard alumite
12	Hexagon head bolt	Stainless steel		26	Hexagon socket head cap screw	Alloy steel	Zinc chromate
13	Floating bush	Stainless steel		27	Head cover	Aluminum alloy	Alumite
14	Hexagon socket head cap screw	Alloy steel	Zinc chromate	28	Plug	Copper alloy	Nickeling

Repair parts list

Bore size (mm)	Kit No.	Repair parts No.
ø25	LCX-25K	17 18
ø32	LCX-32K	20 23

Internal structure and parts list

Structure with stopper

● Rubber cushion stopper, metal stopper

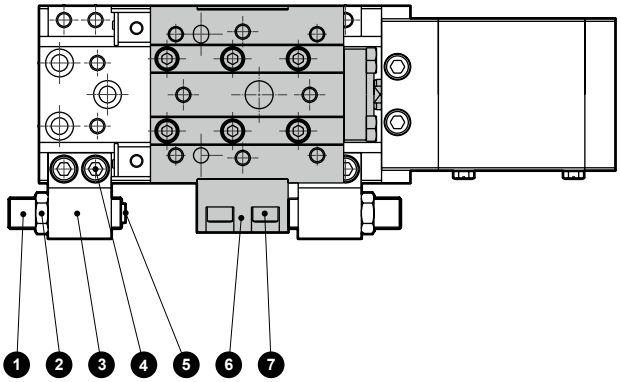

● Shock absorber stopper

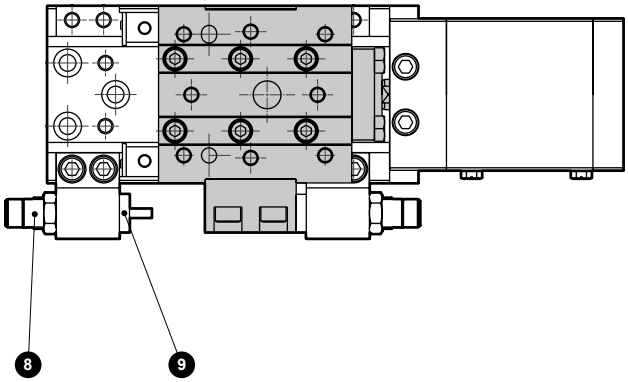

Parts list

No.	Part name	Material	Remarks
1	Stopper bolt	Alloy steel	Nickeling
2	Hexagon nut	Alloy steel	Zinc chromate
3	Stopper	Aluminum alloy	Alumite
4	Hexagon socket head cap screw	Alloy steel	Zinc chromate
5	Cushion rubber	Urethane rubber	Cushion rubber stopper only

No.	Part name	Material	Remarks
6	Stopper block (Stopper block code: Blank)	Steel	Nickeling
	Stopper block (Stopper block code: T)	Steel	Nitriding
7	Hexagon socket head cap screw	Alloy steel	Zinc chromate
8	Shock absorber		
9	Stop cap	Stainless steel	

LCM
LCR
LCG
LCW
LCX
STM
STG
STS/STL
STR2
UCA2
ULK*
JSK/M2
JSG
JSC3/JSC4
USSD
UFCD
USC
UB
JSB3
LMB
LML
HCM
HCA
LBC
CAC4
UCAC2
CAC-N
UCAC-N
RCS2
RCC2
PCC
SHC
MCP
GLC
MFC
BBS
RRC
GRC
RV3*
NHS
HRL
LN
Hand
Chuk
MecHnd/Chuk
ShkAbs
FJ
FK
SpdContr
Ending

Dimensions

● Double acting/single rod LCX-25, 32

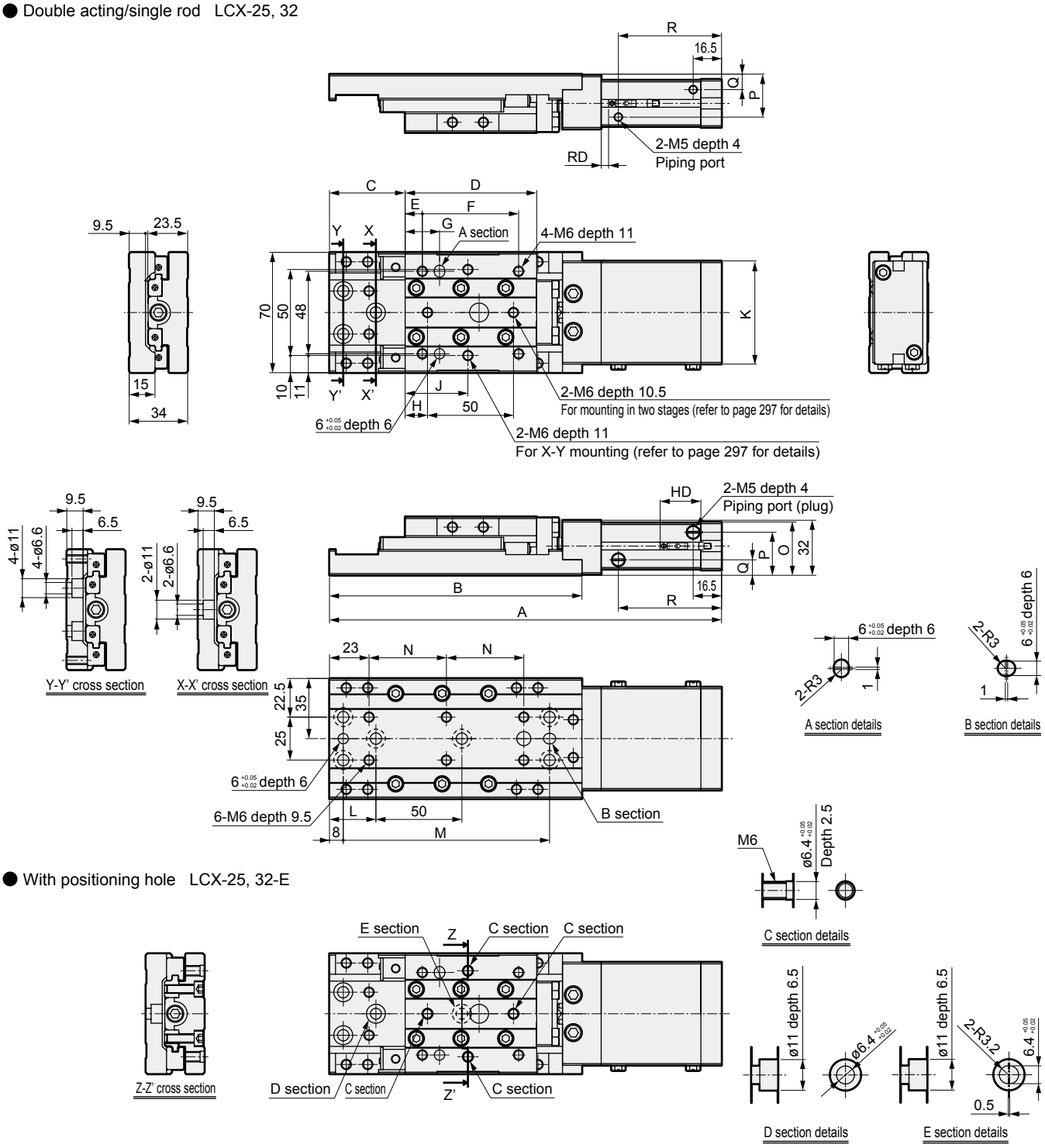

● With positioning hole LCX-25, 32-E

Bore size	Stroke length	A	B	C	D	E	F	G	H	J	K	L	M	N	O	P	Q	R	RD T0* T2* T5* T3*	RD T2W* T3W*	HD T0* T2* T5* T3*	HD T2W* T3W*
ø25	10	208	147	34	76.5	10	56	20	13	36.5	50	27	120	45	29.5	24.5	9.5	40	5	6.5	23.5	21.5
	20	218		39														50				
	30	228		44														60				
	40	258	167	49	86.5	15	64	30	23	46.5		41	140	55				70				
	50	268		54														80				
ø32	10	208	147	34	76.5	10	56	20	13	36.5	60	27	120	45	31	25	9	40				
	20	218		39														50				
	30	228		44														60				
	40	258	167	49	86.5	15	64	30	23	46.5		41	140	55				70				
	50	268		54														80				

LCM
LCR
LCG
LCW
LCX
STM
STG
STS/STL
STR2
UCA2
ULK*
JSK/M2
JSG
JSC3/JSC4
USSD
UFCD
USC
UB
JSB3
LMB
LML
HCM
HCA
LBC
CAC4
UCAC2
CAC-N
UCAC-N
RCS2
RCC2
PCC
SHC
MCP
GLC
MFC
BBS
RRC
GRC
RV3*
NHS
HRL
LN
Hand
Chuk
MecHnd/Chuk
ShkAbs
FJ
FK
SpdContr
Ending

Dimensions: Option

● Rubber cushion stopper (S1 to S6)

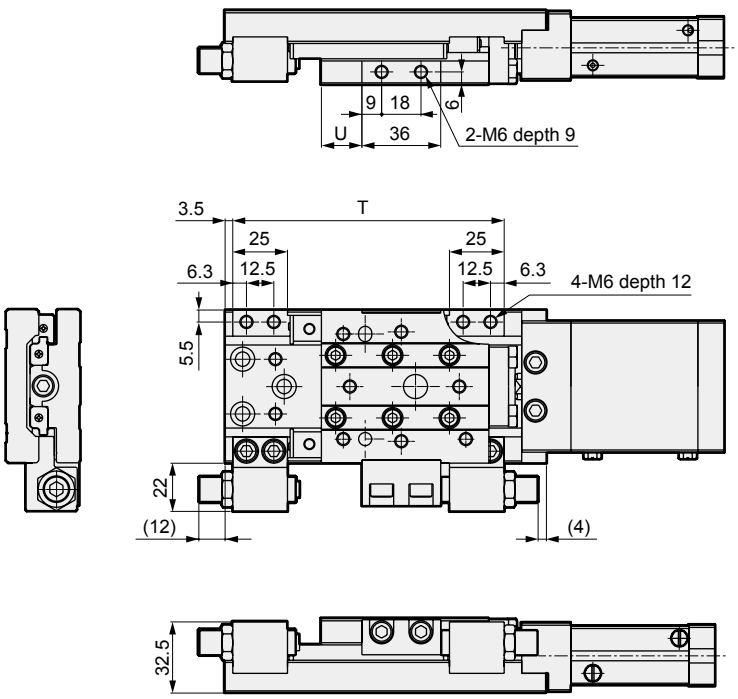

● Metal stopper (M1 to M6)

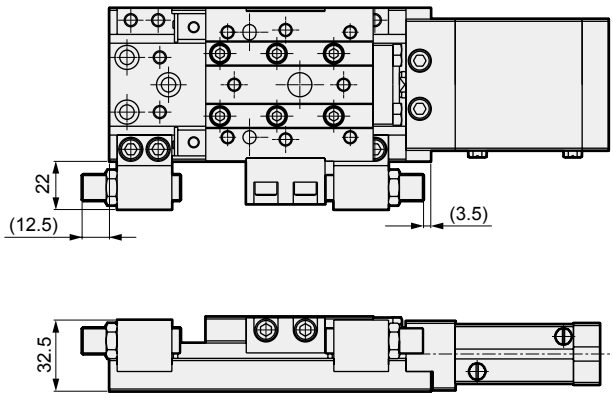

● Shock absorber stopper (A1 to A6)

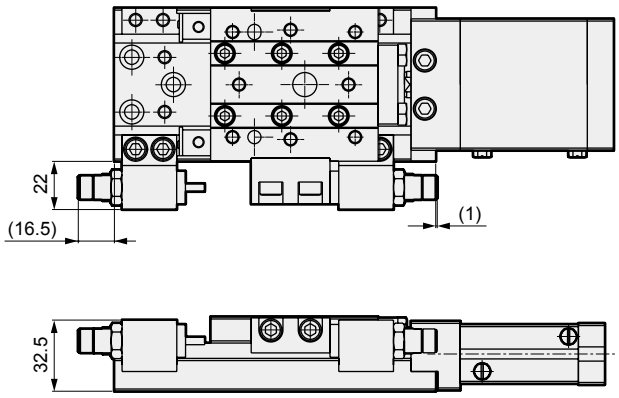

Note: When the adjustable stroke range is increased or decreased with the rubber cushion stopper (S1 to S6) or metal stopper (M1 to M6), the dimensions in ( ) increase or decrease accordingly.

Bore size	Stroke length	T	U	Adjustable stroke range (single side)		
				Cushion stopper	Metal stopper	Shock absorber stopper
ø25	10	124	18.5	5	5	1
	20			10	10	7
	30					
	40	144	28.5			
	50					
ø32	10	124	18.5	5	5	1
	20			10	10	7
	30					
	40	144	28.5			
	50					

Linear slide cylinder double acting/single rod/position locking

LCX-Q Series

● Bore size: ø25/ø32

JIS symbol

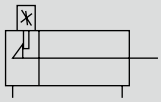

RoHS CAD

Specifications

Item	LCX-Q	
Bore size mm	ø25	ø32
Actuation	Double acting	
Working fluid	Compressed air	
Max. working pressure MPa	0.7 (≈100 psi, 7 bar)	
Min. working pressure MPa	0.15 (≈22 psi, 1.5 bar)	
Proof pressure MPa	1.05 (≈150 psi, 10.5 bar)	
Ambient temperature °C	-10 (14°F) to 60 (140°F) (no freezing) (*1)	
Port size	M5	
Stroke tolerance mm	$^{+2.0}_{0}$ (*2)	
Working piston speed mm/s	20 to 500 (*3)	
Cushion	With rubber cushion	
Position locking mechanism	Head side	
Holding force N	130	230
Lubrication	Not available	
Allowable absorbed energy J	Refer to Table 3 on page 299.	

*1 : Contact CKD if the use environment is always cold (5°C or below) or hot (40°C and above).
*2 : Note that there will be a slight gap between the plate and floating bush if no stopper is attached.
*3 : Keep within 20 to 200 mm/s when using a metal stopper.

Stroke length

Bore size (mm)	Standard stroke length (mm)
ø25	10, 20, 30, 40, 50
ø32	10, 20, 30, 40, 50

Note: Products with stroke lengths other than the above are not available.

Theoretical thrust table

Refer to page 298.

Switch specifications

Item	Reed 2-wire				Proximity 2-wire		Proximity 3-wire		
	T0H/T0V		T5H/T5V		T2H/T2V	T2WH/T2WV	T3H/T3V	T3PH/T3PV	T3WH/T3WV
Applications	For programmable controller, relay		For programmable controller, relay, IC circuit (without indicator lamp), serial connection		Dedicated for programmable controller		For programmable controller, relay		
Output method	-		-		-		NPN output	PNP output	NPN output
Power supply voltage	-		-		-		10 to 28 VDC		
Load voltage	12/24 VDC	110 VAC	5/12/24 VDC	110 VAC	10 to 30 VDC	24 VDC ±10%	30 VDC or less		
Load current	5 to 50 mA	7 to 20 mA	50 mA or less	20 mA or less	5 to 20 mA		100 mA or less		50 mA or less
Indicator lamp	LED (Lit when ON)		Without indicator lamp		LED (Lit when ON)	Red/green LED (Lit when ON)	LED (Lit when ON)	Yellow LED (Lit when ON)	Red/green LED (Lit when ON)
Leakage current	0 mA				1 mA or less		10 μA or less		
Weight g	1 m:18 3 m:49 5 m:80				1 m:18 3 m:49 5 m:80		1 m:18 3 m:49 5 m:80		

*1 : Refer to Ending Page 1 for detailed switch specifications and dimensions.
*2 : Switches other than the above models, such as switches with connectors, are also available. Refer to Ending Page 1.
*3 : The max. load current is 20 mA at 25°C. The current is lower than 20 mA if the operating ambient temperature around the switch is higher than 25°C. (5 to 10 mA at 60°C)

Cylinder weight

● Position locking (Unit: g)

Bore size (mm)	Basic Stroke length (mm)				
	10	20	30	40	50
ø25	1,060	1,090	1,110	1,230	1,250
ø32	1,130	1,160	1,180	1,310	1,330

● Weight of variation/option (stopper) (Unit: g)

Bore size (mm)	Option/stopper code		
	S1/S2	M1/M2	A1/A2
ø25	170		
ø32			

How to order

Without switch (built-in magnet for switch)

LCX-Q - 25 - 40 ——— S5 E

With switch (built-in magnet for switch)

LCX-Q - 25 - 40 - T2H* - R - S1T E

Model No.

Ⓐ Bore size

Ⓑ Stroke length

Ⓒ Switch model No.

Ⓓ Switch quantity

Ⓔ Stopper

Ⓕ Option

Code	Description
Ⓐ Bore size	
25	ø25
32	ø32
Ⓑ Stroke length (mm)	
10	10
20	20
30	30
40	40
50	50

Ⓒ Switch model No.

Axial lead wire	Radial lead wire	Contact	Voltage AC	Voltage DC	Indicator lamp	Lead wire
T0H*	**T0V***	Reed	●	●	1-color display	2-wire
T5H*	**T5V***	Reed	●	●	no indicator lamp	2-wire
T2H*	**T2V***	Proximity		●	1-color display	2-wire
T3H*	**T3V***	Proximity		●	1-color display	3-wire
T3PH*	**T3PV***	Proximity		●	1-color display (PNP output)	3-wire
T2WH*	**T2WV***	Proximity		●	2-color display	2-wire
T3WH*	**T3WV***	Proximity		●	2-color display	3-wire

*** Lead wire length**	
Blank	1 m (standard)
3	3 m (option)
5	5 m (option)
Ⓓ Switch quantity	
R	1 on rod side
H	1 on head side
D	2
Ⓔ Stopper	
Blank	Without stopper
S Cushion stopper	*1, *4, *7
S1*	Stopper position① (Stopper mount position)
S2*	Stopper position② (Stopper mount position)
M Metal stopper	*1, *3, *4, *5, *7
M1*	Stopper position① (Stopper mount position)
M2*	Stopper position② (Stopper mount position)
A Shock absorber stopper	*2, *4, *7
A1*	Stopper position① (Stopper mount position)
A2*	Stopper position② (Stopper mount position)
*** part**	
Blank	Stopper block material: steel
T	Stopper block material: steel (nitriding) *6
Ⓕ Option	
Blank	No option
E	With positioning hole *8

⚠ Precautions for model No. selection

*1 : To change the adjustable stroke length, use the discrete rubber cushion stopper or metal stopper on page 266.
*2 : For the adjustable stroke range with a shock absorber stopper, refer to the stopper dimensions table on page 263.
*3 : The steel stopper block (nitrided) (code: T) is recommended for a metal stopper.
*4 : Combination of the rubber cushion stopper, metal stopper and shock absorber stopper is made to order.
*5 : Keep within 20 to 200 mm/s when using a metal stopper.
*6 : Can be selected for the type with stopper only.
*7 : Do not attach to the stopper positions ③ and ④ since the locking mechanism works at the stroke end.
*8 : The positioning hole enables assembling of the crossed unit and two-stage unit without adjusting the position. Use a positioning bolt as well (page 267).
*9 : Refer to page 267 for single cylinder model No.

[Example of model No.]

LCX-Q-25-40-T2H-R-S1TE

Model: Linear slide cylinder Double acting/position locking LCX-Q

Ⓐ Bore size : ø25
Ⓑ Stroke length : 40 mm
Ⓒ Switch model No. : Proximity/2-wire Axial lead wire
Ⓓ Switch quantity : 1 on rod side
Ⓔ Stopper : Rubber cushion stopper Stopper position① Material, steel (nitriding)
Ⓕ Option : With positioning hole

● Stopper position

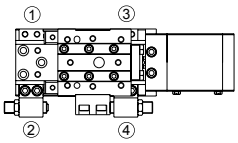

LCM
LCR
LCG
LCW
LCX
STM
STG
STS/STL
STR2
UCA2
ULK*
JSK/M2
JSG
JSC3/JSC4
USSD
UFCD
USC
UB
JSB3
LMB
LML
HCM
HCA
LBC
CAC4
UCAC2
CAC-N
UCAC-N
RCS2
RCC2
PCC
SHC
MCP
GLC
MFC
BBS
RRC
GRC
RV3*
NHS
HRL
LN
Hand
Chuk
MecHnd/Chuk
ShkAbs
FJ
FK
SpdContr
Ending

How to order switch

SW - T2H3

Switch model No.
(Item Ⓒ on page 265)

How to order a stopper set

- Set of a stopper and rubber cushion stopper, metal stopper or shock absorber stopper
- Use when changing from the standard to the type with rubber cushion stopper, metal stopper or shock absorber stopper.

LCX - 25 - S 2 - S02

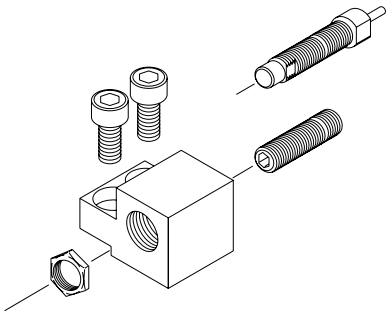

Bore size
(Item Ⓐ on page 265)

Ⓐ Stopper	
S	Cushion stopper
M	Metal stopper
A	Shock absorber stopper

Ⓑ Stopper installation position	
1	Stopper position①
2	Stopper position②

Ⓒ Adjustable stroke length *1	
Blank	Adjustable stroke range 10 mm
S02	Adjustable stroke range 20 mm

*1: Cannot be selected for the shock absorber stopper "A".

(Unit: g)

Model No.				Weight
LCX	25 32	S1	Blank	70
		S2	S02	80
		M1	Blank	70
		M2	S02	80
		A1 A2	-	70

How to order discrete rubber cushion stopper

- Hexagon socket set screw with urethane
- Use when changing the adjustable stroke range or when using a custom stroke length.

LCX - 25 - S02

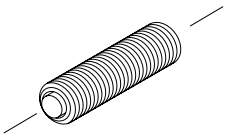

Bore size
(Item Ⓐ on page 265)

Ⓐ Adjustable stroke range	
S01	Single side 10 mm (standard)
S02	Single side 20 mm

(Unit: g)

Model No.			Weight
LCX	25	S01	30
	32	S02	40

How to order discrete metal stopper

- Use when changing the adjustable stroke range or when using a custom stroke length.

LCX - 25 - M02

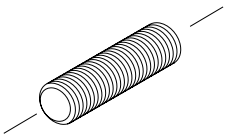

Bore size
(Item Ⓐ on page 265)

Ⓐ Adjustable stroke range	
M01	Single side 10 mm (standard)
M02	Single side 20 mm

(Unit: g)

Model No.			Weight
LCX	25	M01	30
	32	M02	40

LCM
LCR
LCG
LCW
LCX
STM
STG
STS/STL
STR2
UCA2
ULK*
JSK/M2
JSG
JSC3/JSC4
USSD
UFCD
USC
UB
JSB3
LMB
LML
HCM
HCA
LBC
CAC4
UCAC2
CAC-N
UCAC-N
RCS2
RCC2
PCC
SHC
MCP
GLC
MFC
BBS
RRC
GRC
RV3*
NHS
HRL
LN
Hand
Chuk
MecHnd/Chuk
ShkAbs
FJ
FK
SpdContr
Ending

How to order discrete shock absorber stopper

- Set of a shock absorber and stopper cap
- Use when changing from the rubber cushion stopper or metal stopper to the shock absorber stopper.

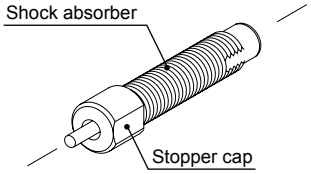

LCX - 25 - A01

Bore size
(Item Ⓐ on page 265)

Note: For the adjustable stroke range with a shock absorber stopper, refer to page 263.

Applicable shock absorber model No.

Model	Shock absorber model No.
LCX-25	NCK-00-1.2
LCX-32	NCK-00-1.2

(Unit: g)

Model No.			Weight
LCX	25 32	A01	30

How to order discrete stopper block

- Use when changing from the standard to the type with rubber cushion stopper, metal stopper or shock absorber stopper.

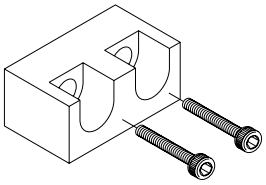

LCX - 25 - SB1 T

Bore size
(Item Ⓐ on page 265)

Ⓐ Stopper block	
SB1	For 30, 50 mm stroke length
SB2	For 10, 20, 40 mm stroke length

Ⓑ Material	
Blank	Stopper block material: steel
T	Stopper block material: steel (nitriding)

(Unit: g)

Model No.			Weight
LCX	25	SB1(T)	80
	32	SB2(T)	100

How to order positioning bolt

- Hexagon socket head cap screw for positioning
- Enables assembling of the crossed unit and two-stage unit without adjusting the position.

LCX - 25 - J

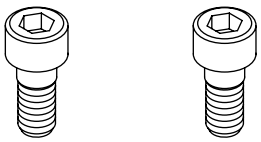

(2 pieces/set)

(Unit: g)

Model No.			Weight
LCX	25	J	10

* Weight per set (2 pieces)

How to order single cylinder

LCX-Q - CYL - 25 - 40

Bore size
(Item Ⓐ on page 265)

Stroke length
(Item Ⓑ on page 265)

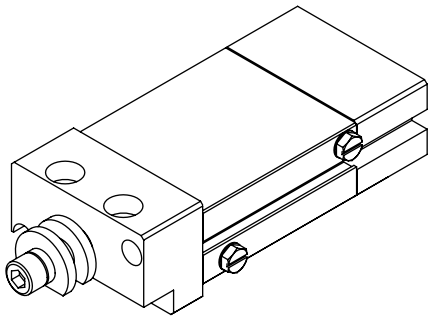

LCM
LCR
LCG
LCW
LCX
STM
STG
STS/STL
STR2
UCA2
ULK*
JSK/M2
JSG
JSC3/JSC4
USSD
UFCD
USC
UB
JSB3
LMB
LML
HCM
HCA
LBC
CAC4
UCAC2
CAC-N
UCAC-N
RCS2
RCC2
PCC
SHC
MCP
GLC
MFC
BBS
RRC
GRC
RV3*
NHS
HRL
LN
Hand
Chuk
MecHnd/Chuk
ShkAbs
FJ
FK
SpdContr
Ending

Internal structure and parts list

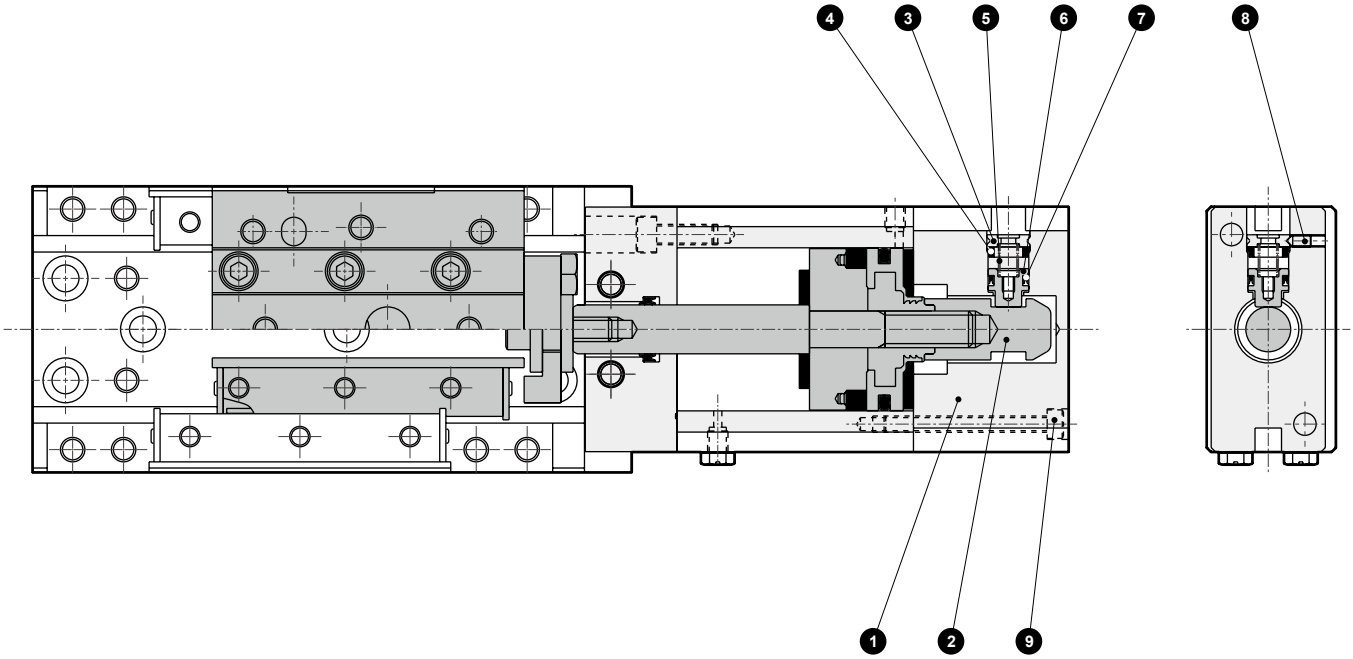

Parts list

No.	Part name	Material	Remarks	No.	Part name	Material	Remarks
1	Head cover	Aluminum alloy	Alumite	6	Stopper piston	Carbon steel	Nitriding
2	Sleeve	Carbon steel	Nitriding	7	Stopper packing	Nitrile rubber	
3	Stopper cover	Stainless steel		8	Hexagon socket set screw	Alloy steel	Black finish
4	Cushion rubber	Urethane rubber		9	Hexagon socket head cap screw	Alloy steel	Zinc chromate
5	Coil spring	Steel					

Repair parts list

Bore size (mm)	Kit No.	Repair parts No.	
		Repair parts for position locking	Basic parts are repair parts
ø25	LCX-Q-25K	4 7	17 18
ø32	LCX-Q-32K		20 23

Note: The repair part numbers for the base section correspond to those in the double acting/single rod parts list on page 260.

Dimensions

● Double acting/position locking LCX-Q-25, 32

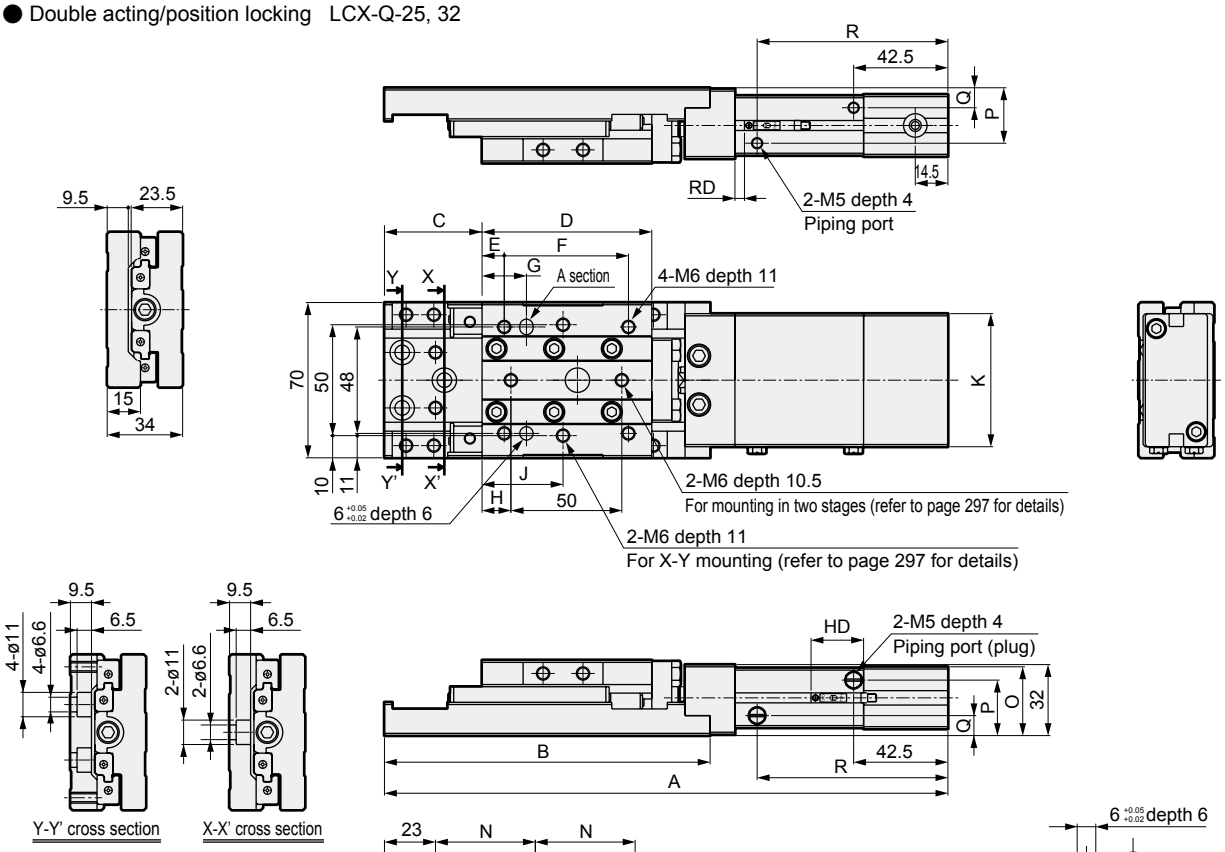

● With positioning hole LCX-Q-25, 32-E

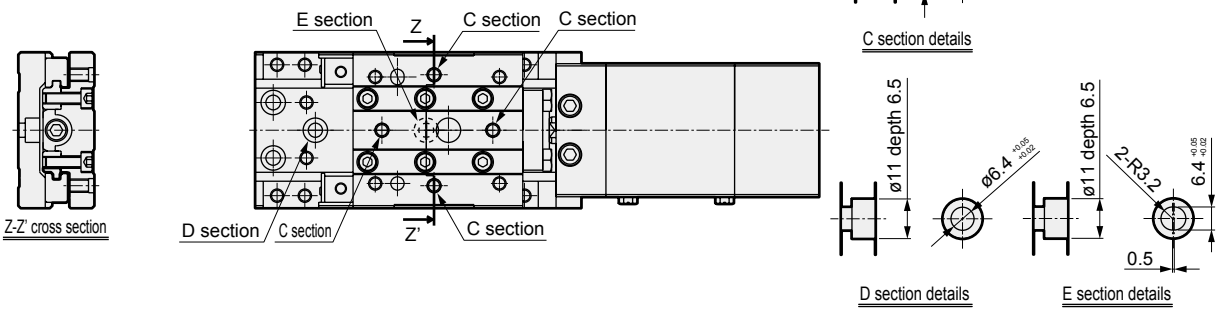

Bore size	Stroke length	A	B	C	D	E	F	G	H	J	K	L	M	N	O	P	Q	R	RD T0* T2* T5* T3*	RD T2W* T3W*	HD T0* T2* T5* T3*	HD T2W* T3W*
ø25	10	234	147	34	76.5	10	56	20	13	36.5	50	27	120	45	29.5	24.5	9.5	66	5	6.5	23.5	21.5
	20	244		39														76				
	30	254		44														86				
	40	284	167	49	86.5	15	64	30	23	46.5		41	140	55				96				
	50	294		54														106				
ø32	10	234	147	34	76.5	10	56	20	13	36.5	60	27	120	45	31	25	9	66				
	20	244		39														76				
	30	254		44														86				
	40	284	167	49	86.5	15	64	30	23	46.5		41	140	55				96				
	50	294		54														106				

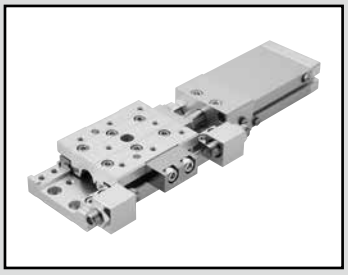

Linear slide cylinder
Double acting/single rod clean-room specifications

LCX-P7* Series

● Bore size: ø25/ø32

JIS symbol

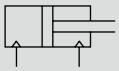

RoHS CAD

Specifications

Item	LCX-P7*	
Bore size mm	ø25	ø32
Actuation	Double acting	
Working fluid	Compressed air	
Max. working pressure MPa	0.7 (≈100 psi, 7 bar)	
Min. working pressure MPa	0.15 (≈22 psi, 1.5 bar)	
Proof pressure MPa	1.05 (≈150 psi, 10.5 bar)	
Ambient temperature °C	-10 (14°F) to 60 (140°F) (no freezing) (*1)	
Port size	M5	
Pressure relief port size	M5	
Stroke tolerance mm	$^{+2.0}_{0}$ (*2)	
Working piston speed mm/s	20 to 500	
Cushion	With rubber cushion	
Lubrication	Not available	
Allowable absorbed energy J	Refer to Table 3 on page 299.	

*1: Contact CKD if the use environment is always cold (5°C or below) or hot (40°C and above).
*2: Note that there will be a slight gap between the plate and floating bush if no stopper is attached.
*3: Keep within 20 to 200 mm/s when using a metal stopper.

Stroke length

Bore size (mm)	Standard stroke length (mm)
ø25	10, 20, 30, 40, 50
ø32	10, 20, 30, 40, 50

Note: Products with stroke lengths other than the above are not available.

Theoretical thrust table

Refer to page 298.

Switch specifications

Item	Reed 2-wire				Proximity 2-wire		Proximity 3-wire		
	T0H/T0V		T5H/T5V		T2H/T2V	T2WH/T2WV	T3H/T3V	T3PH/T3PV	T3WH/T3WV
Applications	For programmable controller, relay		For programmable controller, relay, IC circuit (without indicator lamp), serial connection		Dedicated for programmable controller		For programmable controller, relay		
Output method	-		-		-		NPN output	PNP output	NPN output
Power supply voltage	-		-		-		10 to 28 VDC		
Load voltage	12/24 VDC	110 VAC	5/12/24 VDC	110 VAC	10 to 30 VDC	24 VDC ±10%	30 VDC or less		
Load current	5 to 50 mA	7 to 20 mA	50 mA or less	20 mA or less	5 to 20 mA		100 mA or less		50 mA or less
Indicator lamp	LED (Lit when ON)		Without indicator lamp		LED (Lit when ON)	Red/green LED (Lit when ON)	LED (Lit when ON)	Yellow LED (Lit when ON)	Red/green LED (Lit when ON)
Leakage current	0 mA				1 mA or less		10 μA or less		
Weight g	1 m:18 3 m:49 5 m:80				1 m:18 3 m:49 5 m:80		1 m:18 3 m:49 5 m:80		

*1: Refer to Ending Page 1 for detailed switch specifications and dimensions.
*2: Switches other than the above models, such as switches with connectors, are also available. Refer to Ending Page 1.
*3: The max. load current is 20 mA at 25°C. The current is lower than 20 mA if the operating ambient temperature around the switch is higher than 25˚C. (5 to 10 mA at 60°C)

Cylinder weight

● Clean-room specifications (Unit: g)

Bore size (mm)	Basic Stroke length (mm)				
	10	20	30	40	50
ø25	1,010	1,040	1,060	1,180	1,200
ø32	1,060	1,090	1,110	1,240	1,260

● Weight of variation/option (stopper) (Unit: g)

Bore size (mm)	Option/stopper code			
	S1 to S4	M1 to M4	S5/S6	M5/M6
ø25	170		240	
ø32				

How to order

Without switch (built-in magnet for switch)

LCX - 25 - 40 ——— S5 E P72

With switch (built-in magnet for switch)

LCX - 25 - 40 - T2H* - R - S1T E P72

Model No.
Ⓐ Bore size
Ⓑ Stroke length
Ⓒ Switch model No.
Ⓓ Switch quantity
Ⓔ Stopper
Ⓕ Option
Ⓖ Clean-room specifications

Code	Description
Ⓐ Bore size	
25	ø25
32	ø32
Ⓑ Stroke length (mm)	
10	10
20	20
30	30
40	40
50	50

Ⓒ Switch model No.

Axial lead wire	Radial lead wire	Contact	Voltage AC	Voltage DC	Indicator lamp	Lead wire
T0H*	**T0V***	Reed	●	●	1-color display	2-wire
T5H*	**T5V***	Reed	●	●	no indicator lamp	2-wire
T2H*	**T2V***	Proximity		●	1-color display	2-wire
T3H*	**T3V***	Proximity		●	1-color display	3-wire
T3PH*	**T3PV***	Proximity		●	1-color display (PNP output)	3-wire
T2WH*	**T2WV***	Proximity		●	2-color display	2-wire
T3WH*	**T3WV***	Proximity		●	2-color display	3-wire

* Lead wire length	
Blank	1 m (standard)
3	3 m (option)
5	5 m (option)

Ⓓ Switch quantity	
R	1 on rod side
H	1 on head side
D	2

Ⓔ Stopper		
Blank	Without stopper	
S Cushion stopper		*1, *4
S1*	Stopper position ① (can be changed to ④)	Stopper installation position
S2*	Stopper position ② (can be changed to ③)	Stopper installation position
S3*	Stopper position ③ (can be changed to ②)	Stopper installation position
S4*	Stopper position ④ (can be changed to ①)	Stopper installation position
S5*	Stopper position ①,③	Stopper installation position
S6*	Stopper position ②,④	Stopper installation position
M Metal stopper		*1, *3, *4, *5
M1*	Stopper position ① (can be changed to ④)	Stopper installation position
M2*	Stopper position ② (can be changed to ③)	Stopper installation position
M3*	Stopper position ③ (can be changed to ②)	Stopper installation position
M4*	Stopper position ④ (can be changed to ①)	Stopper installation position
M5*	Stopper position ①,③	Stopper installation position
M6*	Stopper position ②,④	Stopper installation position
*** part**		
Blank	Stopper block material: steel	
T	Stopper block material: steel (nitriding)	*2

Ⓕ Option	
Blank	No option
E	With positioning hole

Ⓖ Clean-room specifications	Structure
P72	Exhaust port
P73	Vacuum treatment

⚠ Precautions for model No. selection

*1 : To change the adjustable stroke length, use the discrete rubber cushion stopper or metal stopper on page 272.
*2 : Can be selected for the type with stopper only.
*3 : The steel stopper block (nitrided) (code: T) is recommended for a metal stopper.
*4 : Combination of the rubber cushion stopper and metal stopper is made to order.
*5 : Keep within 20 to 200 mm/s when using a metal stopper.
*6 : Refer to page 273 for single cylinder model No.

[Example of model No.]

LCX-25-40-T2H-R-S1TEP72

Model: Linear slide cylinder
Double acting/single rod
(clean-room specifications) LCX-P7*

Ⓐ Bore size : ø25
Ⓑ Stroke length : 40 mm
Ⓒ Switch model No. : Proximity/2-wire
Axial lead wire
Ⓓ Switch quantity : 1 on rod side
Ⓔ Stopper : Cushion stopper
Stopper position①
Material, steel (nitriding)
Ⓕ Option : With positioning hole
Ⓖ Clean-room specifications : Exhaust port

● Stopper position

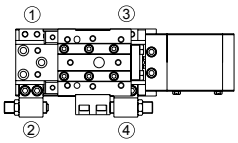

LCM
LCR
LCG
LCW
LCX
STM
STG
STS/STL
STR2
UCA2
ULK*
JSK/M2
JSG
JSC3/JSC4
USSD
UFCD
USC
UB
JSB3
LMB
LML
HCM
HCA
LBC
CAC4
UCAC2
CAC-N
UCAC-N
RCS2
RCC2
PCC
SHC
MCP
GLC
MFC
BBS
RRC
GRC
RV3*
NHS
HRL
LN
Hand
Chuk
MecHnd/Chuk
ShkAbs
FJ
FK
SpdContr
Ending

How to order switch

SW - T2H3

Switch model No.
(Item Ⓒ on page 271)

How to order a stopper set

- Set of a stopper and rubber cushion stopper or metal stopper
- Use when changing from the standard to the type with rubber cushion stopper or metal stopper.

LCX - 25 - S 2 - S02

Bore size
(Item Ⓐ on page 271)

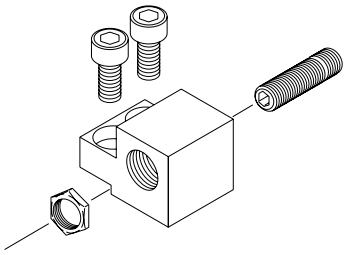

Ⓐ Stopper	
S	Cushion stopper
M	Metal stopper

Ⓑ Stopper installation position	
1	Stopper position for ① or ④
2	Stopper position for ② or ③

Ⓒ Adjustable stroke length *1	
Blank	Adjustable stroke range 10 mm
S02	Adjustable stroke range 20 mm

(Unit: g)

Model No.				Weight
LCX	25 32	S1	Blank	70
		S2	S02	80
		M1	Blank	70
		M2	S02	80
		A1 A2	-	70

How to order discrete rubber cushion stopper

- Hexagon socket set screw with urethane
- Use when changing the adjustable stroke range or when using a custom stroke length.

LCX - 25 - S02

Bore size
(Item Ⓐ on page 271)

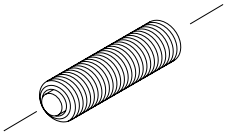

Ⓐ Adjustable stroke range	
S01	Single side 10 mm (standard)
S02	Single side 20 mm

(Unit: g)

Model No.			Weight
LCX	25	S01	30
	32	S02	40

How to order discrete metal stopper

- Use when changing the adjustable stroke range or when using a custom stroke length.

LCX - 25 - M02

Bore size
(Item Ⓐ on page 271)

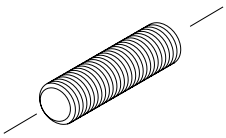

Ⓐ Adjustable stroke range	
M01	Single side 10 mm (standard)
M02	Single side 20 mm

(Unit: g)

Model No.			Weight
LCX	25	M01	30
	32	M02	40

How to order discrete stopper block

● Use when changing from the standard to the type with rubber cushion stopper or metal stopper.

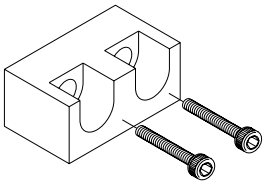

LCX - 25 - SB1 T

Bore size
(Item Ⓐ on page 271)

Ⓐ Stopper block	
SB1	For 30, 50 mm stroke length
SB2	For 10, 20, 40 mm stroke length

Ⓑ Material	
Blank	Stopper block material: steel
T	Stopper block material: steel (nitriding)

(Unit: g)

Model No.			Weight
LCX	25	SB1(T)	80
	32	SB2(T)	100

How to order positioning bolt

● Hexagon socket head cap screw for positioning
● Enables assembling of the crossed unit and two-stage unit without adjusting the position.

LCX - 25 - J

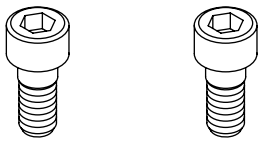

(2 pieces/set)

(Unit: g)

Model No.			Weight
LCX	25	J	10

* Weight per set (2 pieces)

How to order single cylinder

LCX - CYL - 25 - 40 - P72

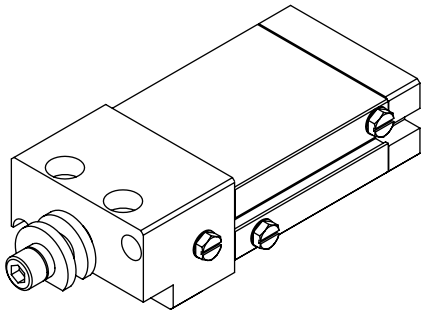

Bore size
(Item Ⓐ on page 271)

Stroke length
(Item Ⓑ on page 271)

Ⓐ Variation	
P72	Clean-room specifications (exhaust port)
P73	Clean-room specifications (vacuum treatment)

LCM
LCR
LCG
LCW
LCX
STM
STG
STS/STL
STR2
UCA2
ULK*
JSK/M2
JSG
JSC3/JSC4
USSD
UFCD
USC
UB
JSB3
LMB
LML
HCM
HCA
LBC
CAC4
UCAC2
CAC-N
UCAC-N
RCS2
RCC2
PCC
SHC
MCP
GLC
MFC
BBS
RRC
GRC
RV3*
NHS
HRL
LN
Hand
Chuk
MecHnd/Chuk
ShkAbs
FJ
FK
SpdContr
Ending

Dimensions

● Double acting/clean-room specifications LCX-25, 32-P7*

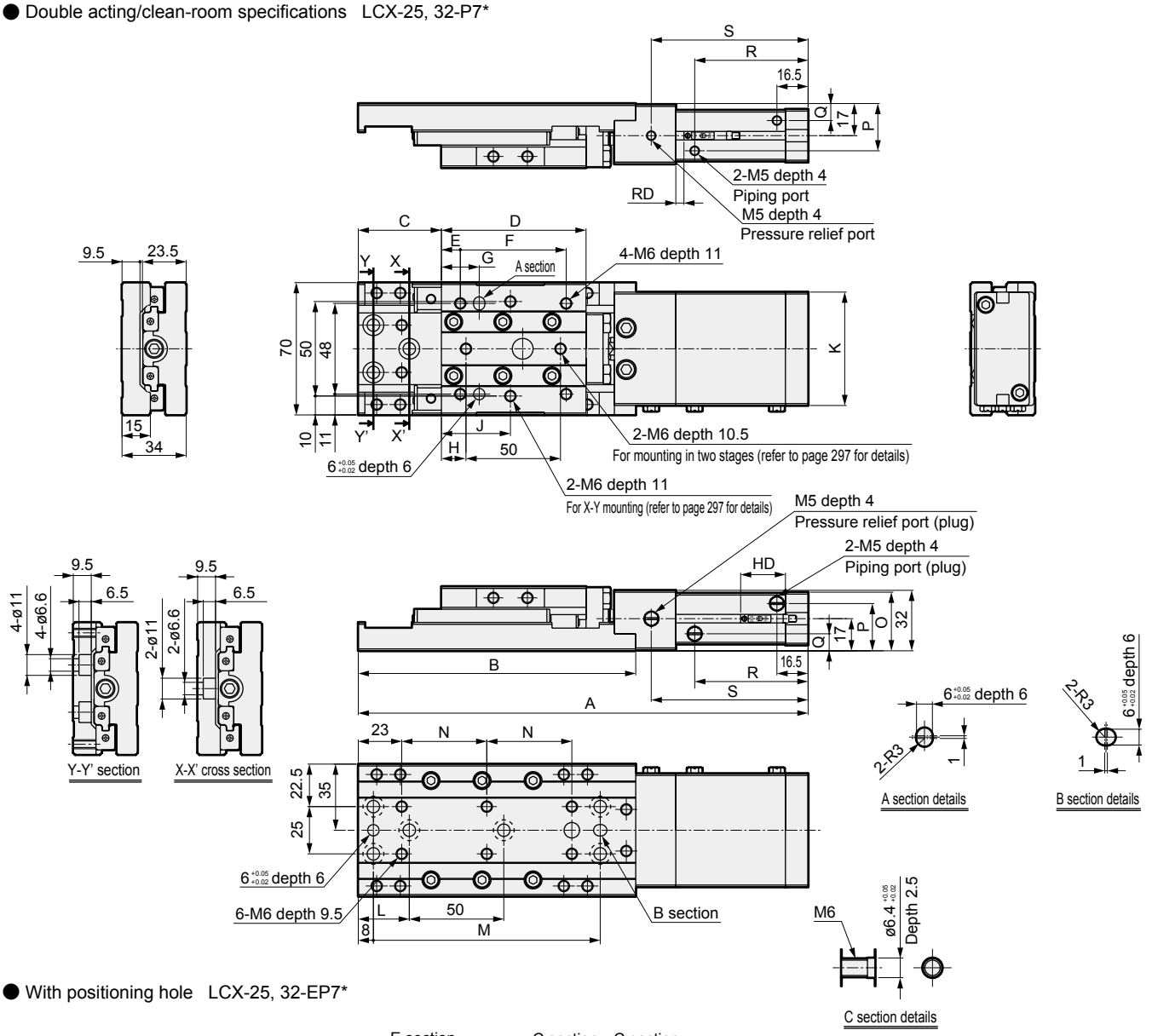

● With positioning hole LCX-25, 32-EP7*

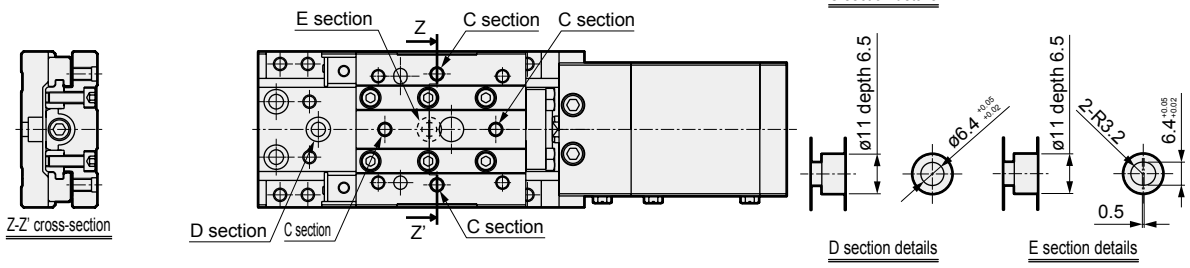

Bore size	Stroke length	A	B	C	D	E	F	G	H	J	K	L	M	N	O	P	Q	R	S	RD T0* T2* T5* T3*	RD T2W* T3W*	HD T0* T2* T5* T3*	HD T2W* T3W*
ø25	10	218	147	34	76.5	10	56	20	13	36.5	50	27	120	45	29.5	24.5	9.5	40	63	5	6.5	23.5	21.5
	20	228		39														50	73				
	30	238		44														60	83				
	40	268	167	49	86.5	15	64	30	23	46.5		41	140	55				70	93				
	50	278		54														80	103				
ø32	10	218	147	34	76.5	10	56	20	13	36.5	60	27	120	45	31	25	9	40	63				
	20	228		39														50	73				
	30	238		44														60	83				
	40	268	167	49	86.5	15	64	30	23	46.5		41	140	55				70	93				
	50	278		54														80	103				

MEMO

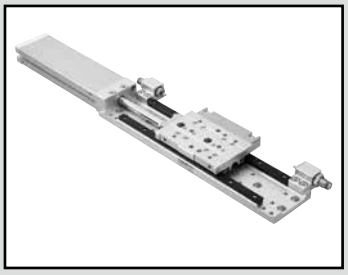

Linear slide cylinder Double acting/single rod/long stroke

LCX-*L Series

● Bore size: ø25/ø32

JIS symbol

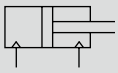

RoHS CAD

Specifications

Item	LCX	
Bore size mm	ø25	ø32
Actuation	Double acting	
Working fluid	Compressed air	
Max. working pressure MPa	0.7 (≈100 psi, 7 bar)	
Min. working pressure MPa	0.15 (≈22 psi, 1.5 bar)	
Proof pressure MPa	1.05 (≈150 psi, 10.5 bar)	
Ambient temperature °C	-10 to 60 (no freezing) (*1)	
Port size	M5	
Stroke tolerance mm	$^{+2.0}_{0}$ (*2)	
Working piston speed mm/s	20 to 500 (*3)	
Cushion	With rubber cushion	
Lubrication	Not available	
Allowable absorbed energy J	Refer to Table 3 on page 299.	

*1: Contact CKD if the use environment is always cold (5°C or below) or hot (40°C and above).
*2: Note that there will be a slight gap between the plate and floating bush if no stopper is attached.
*3: Keep within 20 to 200 mm/s when using a metal stopper.

Stroke length

Bore size (mm)	Standard stroke length (mm)
ø25	75, 100, 125, 150
ø32	75, 100, 125, 150

Note: Products with stroke lengths other than the above are not available.

Theoretical thrust table

Refer to page 298.

Switch specifications

Item	Reed 2-wire				Proximity 2-wire		Proximity 3-wire		
	T0H/T0V		T5H/T5V		T2H/T2V	T2WH/ T2WV	T3H/ T3V	T3PH/ T3PV	T3WH/ T3WV
Applications	For programmable controller, relay		For programmable controller, relay, IC circuit (without indicator lamp), serial connection		Dedicated for programmable controller		For programmable controller, relay		
Output method	-		-		-		NPN output	PNP output	NPN output
Power supply voltage	-		-		-		10 to 28 VDC		
Load voltage	12/24 VDC	110 VAC	5/12/24 VDC	110 VAC	10 to 30 VDC	24 VDC ±10%	30 VDC or less		
Load current	5 to 50 mA	7 to 20 mA	50 mA or less	20 mA or less	5 to 20 mA		100 mA or less		50 mA or less
Indicator lamp	LED (Lit when ON)		Without indicator lamp		LED (Lit when ON)	Red/green LED (Lit when ON)	LED (Lit when ON)	Yellow LED (Lit when ON)	Red/green LED (Lit when ON)
Leakage current	0 mA				1 mA or less		10 μA or less		
Weight g	1 m:18 3 m:49 5 m:80				1 m:18 3 m:49 5 m:80		1 m:18 3 m:49 5 m:80		

*1 : Refer to Ending Page 1 for detailed switch specifications and dimensions.
*2 : Switches other than the above models, such as switches with connectors, are also available. Refer to Ending Page 1.
*3 : The max. load current is 20 mA at 25°C. The current is lower than 20 mA if the operating ambient temperature around the switch is higher than 25˚C. (5 to 10 mA at 60°C)

Cylinder weight

● Basic (Unit: g)

Bore size (mm)	Basic Stroke length (mm)			
	75	100	125	150
ø25	1,500	1,640	1,790	1,930
ø32	1,600	1,750	1,900	2,050

● Additional weight of options (Unit: g)

Bore size (mm)	Option/stopper code					
	S1 to S4	M1 to M4	A1 to A4	S5/S6	M5/M6	A5/A6
ø25	320			400		
ø32						

Specifications for rechargeable battery (Catalog No. CC-1226A)

LCX - *L … - P4*

● Design compatible with rechargeable battery manufacturing process.

* Contact CKD for details.

LCM
LCR
LCG
LCW
LCX
STM
STG
STS/STL
STR2
UCA2
ULK*
JSK/M2
JSG
JSC3/JSC4
USSD
UFCD
USC
UB
JSB3
LMB
LML
HCM
HCA
LBC
CAC4
UCAC2
CAC-N
UCAC-N
RCS2
RCC2
PCC
SHC
MCP
GLC
MFC
BBS
RRC
GRC
RV3*
NHS
HRL
LN
Hand
Chuk
MecHnd/Chuk
ShkAbs
FJ
FK
SpdContr
Ending

How to order

Without switch (built-in magnet for switch)

LCX - 25 L - 100 ——— S5

With switch (built-in magnet for switch)

LCX - 25 L - 100 - T2H* - R - A1T

Model No.

Ⓐ Bore size

Ⓑ Stroke length

Ⓒ Switch model No.

Ⓓ Switch quantity

Ⓔ Stopper

Code	Description
Ⓐ Bore size	
25	ø25
32	ø32

Ⓑ Stroke length (mm)	
75	75
100	100
125	125
150	150

Ⓒ Switch model No.

Axial lead wire	Radial lead wire	Contact	Voltage AC	Voltage DC	Indicator lamp	Lead wire
T0H*	**T0V***	Reed	●	●	1-color display	2-wire
T5H*	**T5V***		●	●	Without indicator lamp	
T2H*	**T2V***	Proximity		●	1-color display	2-wire
T3H*	**T3V***			●		3-wire
T3PH*	**T3PV***			●	1-color display (PNP output)	3-wire
T2WH*	**T2WV***			●	2-color display	2-wire
T3WH*	**T3WV***			●		3-wire

*** Lead wire length**	
Blank	1 m (standard)
3	3 m (option)
5	5 m (option)

Ⓓ Switch quantity	
R	1 on rod side
H	1 on head side
D	2

Ⓔ Stopper		
Blank	Without stopper	
S Cushion stopper		***1, *4**
S1*	Stopper position ① (can be changed to ④)	Stopper installation position
S2*	Stopper position ② (can be changed to ③)	
S3*	Stopper position ③ (can be changed to ②)	
S4*	Stopper position ④ (can be changed to ①)	
S5*	Stopper position ①,③	
S6*	Stopper position ②,④	
M Metal stopper		***1, *3, *4, *5**
M1*	Stopper position ① (can be changed to ④)	Stopper installation position
M2*	Stopper position ② (can be changed to ③)	
M3*	Stopper position ③ (can be changed to ②)	
M4*	Stopper position ④ (can be changed to ①)	
M5*	Stopper position ①,③	
M6*	Stopper position ②,④	
A Shock absorber stopper		***2, *4, *7**
A1*	Stopper position ① (can be changed to ④)	Stopper installation position
A2*	Stopper position ② (can be changed to ③)	
A3*	Stopper position ③ (can be changed to ②)	
A4*	Stopper position ④ (can be changed to ①)	
A5*	Stopper position ①,③	
A6*	Stopper position ②,④	
*** part**		
Blank	Stopper block material: steel	
T	Stopper block material: steel (nitriding)	*6

⚠ Precautions for model No. selection

*1 : To change the adjustable stroke length, use the discrete rubber cushion stopper or metal stopper on page 280.
*2 : For the adjustable stroke range with a shock absorber stopper, refer to the stopper dimensions table on page 285.
*3 : The steel stopper block (nitrided) (code: T) is recommended for a metal stopper.
*4 : Combination of the rubber cushion stopper, metal stopper and shock absorber stopper is made to order.
*5 : Keep within 20 to 200 mm/s when using a metal stopper.
*6 : Can be selected for the type with stopper only.
*7 : The long stroke length has a positioning hole option (code: E) as standard.
*8 : Refer to page 281 for single cylinder model No.

[Example of model No.]

LCX-25L-100-T2H-R-A1T

Model: Linear slide cylinder
Double acting/single rod LCX
Ⓐ Bore size : ø25
Ⓑ Stroke length : 100 mm
Ⓒ Switch model No. : Proximity/2-wire
Axial lead wire
Ⓓ Switch quantity : 1 on rod side
Ⓔ Stopper : Shock absorber stopper
Stopper position①
Material, steel (nitriding)

● Stopper position

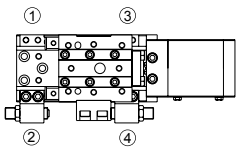

LCM
LCR
LCG
LCW
LCX
STM
STG
STS/STL
STR2
UCA2
ULK*
JSK/M2
JSG
JSC3/JSC4
USSD
UFCD
USC
UB
JSB3
LMB
LML
HCM
HCA
LBC
CAC4
UCAC2
CAC-N
UCAC-N
RCS2
RCC2
PCC
SHC
MCP
GLC
MFC
BBS
RRC
GRC
RV3*
NHS
HRL
LN
Hand
Chuk
MecHnd/Chuk
ShkAbs
FJ
FK
SpdContr
Ending

How to order switch

SW - T2H3

Switch model No.
(Item Ⓒ on page 278)

How to order a stopper set

- Set of a stopper and rubber cushion stopper, metal stopper or shock absorber stopper
- Use when changing from the standard to the type with rubber cushion stopper, metal stopper or shock absorber stopper.

LCX - 25 - S 2 - S02

Bore size
(Item Ⓐ on page 278)

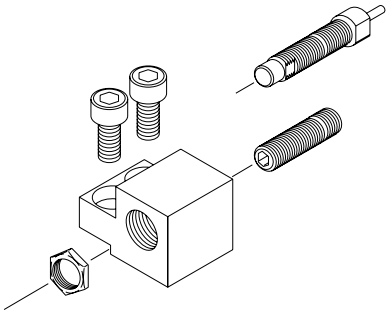

Ⓐ Stopper	
S	Cushion stopper
M	Metal stopper
A	Shock absorber stopper

Ⓑ Stopper installation position	
1	Stopper position for ① or ④
2	Stopper position for ② or ③

Ⓒ Adjustable stroke length *1	
Blank	Adjustable stroke range 10 mm
S02	Adjustable stroke range 20 mm

*1: Cannot be selected for the shock absorber stopper “A”.

(Unit: g)

Model No.				Weight
LCX	25 32	S1	Blank	70
		S2	S02	80
		M1	Blank	70
		M2	S02	80
		A1 A2	-	70

LCM
LCR
LCG
LCW
LCX
STM
STG
STS/STL
STR2
UCA2
ULK*
JSK/M2
JSG
JSC3/JSC4
USSD
UFCD
USC
UB
JSB3
LMB
LML
HCM
HCA
LBC
CAC4
UCAC2
CAC-N
UCAC-N
RCS2
RCC2
PCC
SHC
MCP
GLC
MFC
BBS
RRC
GRC
RV3*
NHS
HRL
LN
Hand
Chuk
MecHnd/Chuk
ShkAbs
FJ
FK
SpdContr
Ending

How to order discrete rubber cushion stopper

- Hexagon socket set screw with urethane
- Use when changing the adjustable stroke range or when using a custom stroke length.

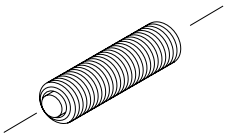

LCX - 25 - S02

Bore size
(Item Ⓐ on page 278)

Ⓐ Adjustable stroke range	
S01	Single side 10 mm (standard)
S02	Single side 20 mm

(Unit: g)

Model No.			Weight
LCX	25	S01	30
	32	S02	40

How to order discrete metal stopper

- Use when changing the adjustable stroke range or when using a custom stroke length.

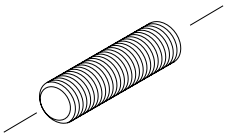

LCX - 25 - M02

Bore size
(Item Ⓐ on page 278)

Ⓐ Adjustable stroke range	
M01	Single side 10 mm (standard)
M02	Single side 20 mm

(Unit: g)

Model No.			Weight
LCX	25	M01	30
	32	M02	40

How to order discrete shock absorber stopper

- Set of a shock absorber and stopper cap
- Use when changing from the rubber cushion stopper or metal stopper to the shock absorber stopper.

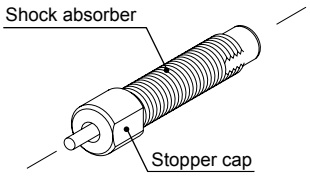

LCX - 25 - A01

Bore size
(Item Ⓐ on page 278)

Note: For the adjustable stroke range with a shock absorber stopper, refer to page 285.

Applicable shock absorber model No.

Model	Shock absorber model No.
LCX-25	NCK-00-1.2
LCX-32	NCK-00-1.2

(Unit: g)

Model No.			Weight
LCX	25 32	A01	30

How to order discrete stopper block

- Use when changing from the standard to the type with rubber cushion stopper, metal stopper or shock absorber stopper.

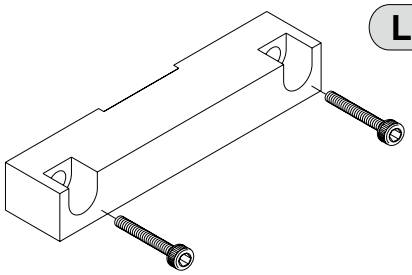

LCX - 25 L - SB3 T

Bore size
(Item Ⓐ on page 278)

Ⓐ Material	
Blank	Stopper block material: steel
T	Stopper block material: steel (nitriding)

(Unit: g)

Model No.			Weight
LCX	25L 32L	SB3(T)	250

How to order positioning bolt

- Hexagon socket head cap screw for positioning
- Enables assembling of the crossed unit and two-stage unit without adjusting the position.

LCX - 25 - J

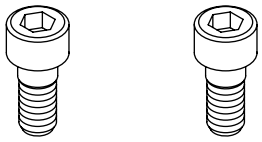

(2 pieces/set)

(Unit: g)

Model No.			Weight
LCX	25	J	10

* Weight per set (2 pieces)

How to order single cylinder

LCX - CYL - 25 L - 100

Bore size
(Item Ⓐ on page 278)

Stroke length
(Item Ⓑ on page 278)

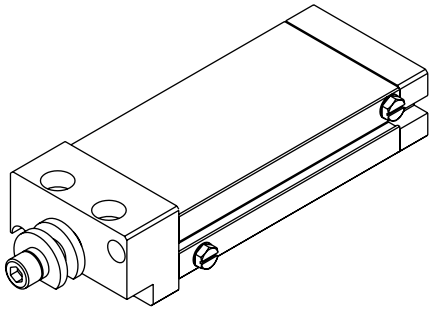

Internal structure and parts list

● LCX

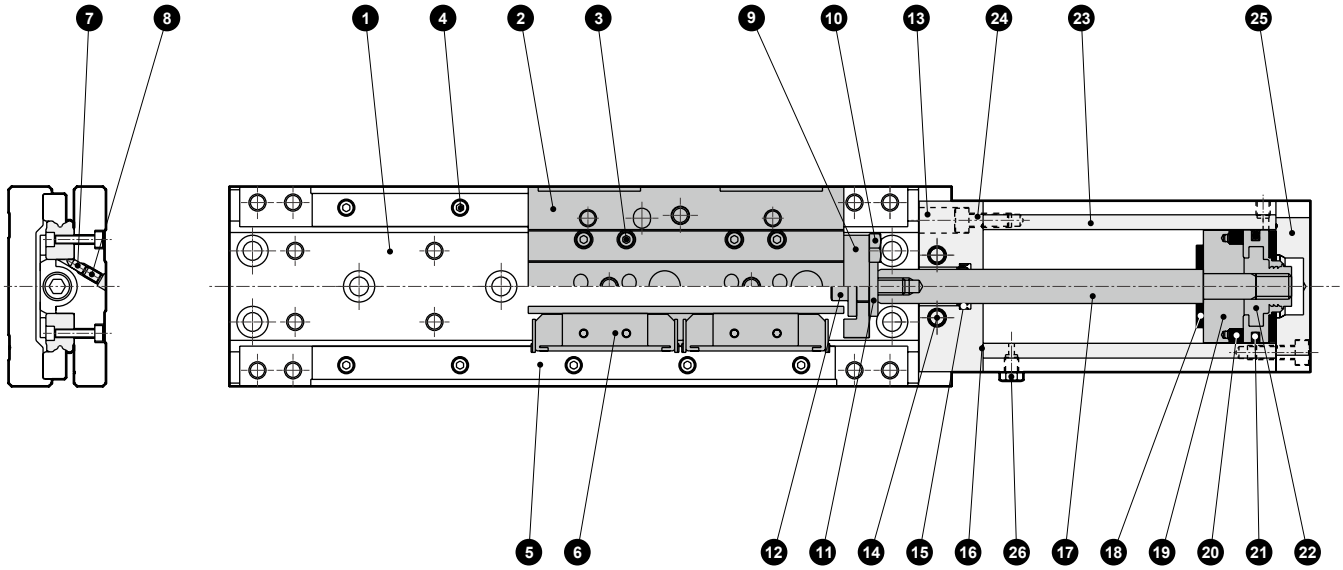

Parts list

No.	Part name	Material	Remarks	No.	Part name	Material	Remarks
1	Base	Aluminum alloy	Alumite	14	Hexagon socket head cap screw	Alloy steel	Zinc chromate
2	Table	Aluminum alloy	Alumite	15	Rod packing	Nitrile rubber	
3	Hexagon socket head cap screw	Alloy steel	Zinc chromate	16	Gasket	Nitrile rubber	
4	Hexagon socket head cap screw	Alloy steel	Zinc chromate	17	Piston rod	Alloy steel	Industrial chrome plating
5	Guide rail	Alloy steel	Black chromium film	18	Cushion rubber	Urethane rubber	
6	Guide block	Alloy steel + resin	Black chromium film (alloy steel section)	19	Spacer	Aluminum alloy	
7	Adjusting pin	Stainless steel		20	Magnet	Plastic	
8	Hexagon socket set screw	Alloy steel	Zinc chromate	21	Piston packing	Nitrile rubber	
9	Plate	Aluminum alloy	Alumite	22	Piston	Aluminum alloy + polyacetal	
10	Hexagon head bolt	Stainless steel		23	Cylinder body	Aluminum alloy	Hard alumite
11	Floating bush	Stainless steel		24	Hexagon socket head cap screw	Stainless steel	
12	Hexagon socket head cap screw	Alloy steel	Zinc chromate	25	Head cover	Aluminum alloy	Alumite
13	Rod cover	Aluminum alloy	Alumite	26	Plug	Copper alloy	Nickeling

Repair parts list

Bore size (mm)	Kit No.	Basic parts are repair parts
ø25	LCX-25K	15 16
ø32	LCX-32K	18 21

Internal structure and parts list

Structure with stopper

● Rubber cushion stopper, metal stopper

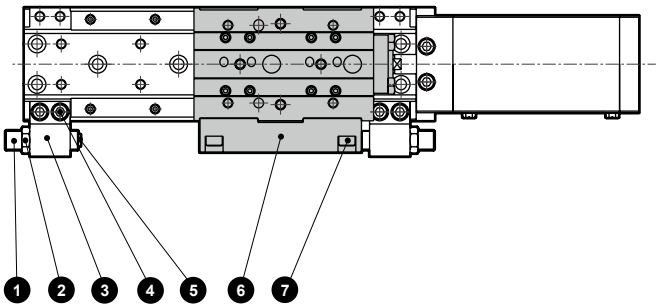

● Shock absorber stopper

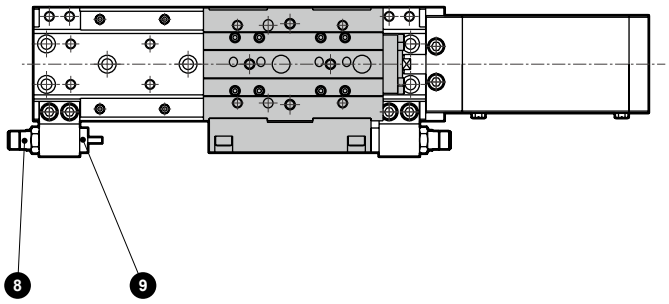

Parts list

No.	Part name	Material	Remarks
1	Stopper bolt	Alloy steel	Nickeling
2	Hexagon nut	Alloy steel	Zinc chromate
3	Stopper	Aluminum alloy	Alumite
4	Hexagon socket head cap screw	Alloy steel	Zinc chromate
5	Cushion rubber	Urethane rubber	Cushion rubber type stopper only

No.	Part name	Material	Remarks
6	Stopper block (Stopper block code: Blank)	Steel	Nickeling
	Stopper block (Stopper block code: T)	Steel	Nitriding
7	Hexagon socket head cap screw	Alloy steel	Zinc chromate
8	Shock absorber		
9	Stop cap	Stainless steel	

LCM
LCR
LCG
LCW
LCX
STM
STG
STS/STL
STR2
UCA2
ULK*
JSK/M2
JSG
JSC3/JSC4
USSD
UFCD
USC
UB
JSB3
LMB
LML
HCM
HCA
LBC
CAC4
UCAC2
CAC-N
UCAC-N
RCS2
RCC2
PCC
SHC
MCP
GLC
MFC
BBS
RRC
GRC
RV3*
NHS
HRL
LN
Hand
Chuk
MecHnd/Chuk
ShkAbs
FJ
FK
SpdContr
Ending

Dimensions

● Double acting/single rod/long stroke length LCX-*L

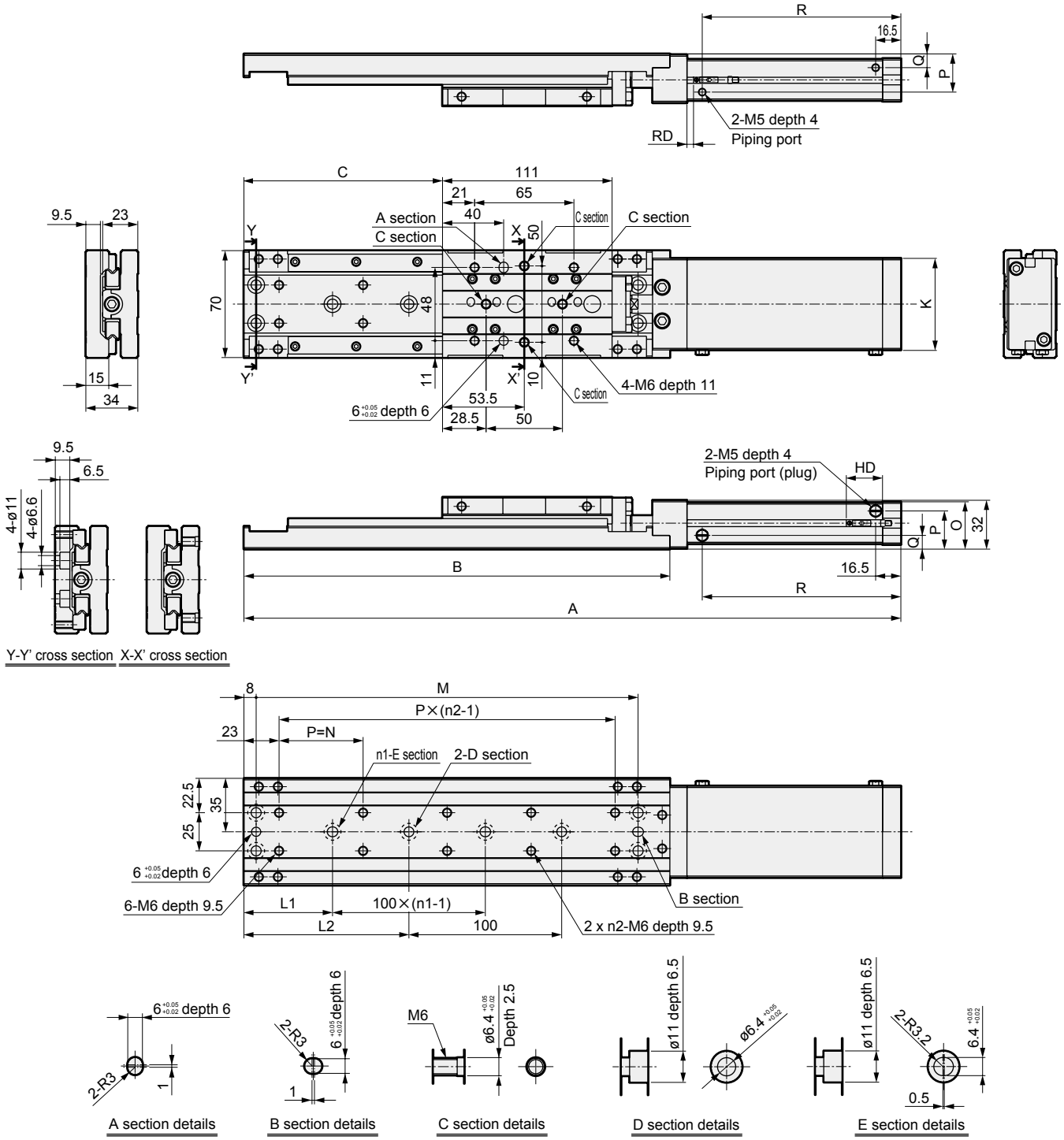

Bore size	Stroke length	A	B	C	K	L1	L2	n1	n2	M	N	O	P	Q	R	RD			HD		
																T0* T5*	T2* T3*	T2W* T3W*	T0* T5*	T2* T3*	T2W* T3W*
ø25	75	380	254	105	50	45.5	95.5	2	5	225	49	29.5	24.5	9.5	105	5		6.5	23.5		21.5
	100	430	279	130		58	108	2	5	250	55				130						
	125	480	304	155		45.5	95.5	3	6	275	49				155						
	150	530	329	180		58	108	3	6	300	54				180						
ø32	75	380	254	105	60	45.5	95.5	2	5	225	49	31	25	9	105						
	100	430	279	130		58	108	2	5	250	55				130						
	125	480	304	155		45.5	95.5	3	6	275	49				155						
	150	530	329	180		58	108	3	6	300	54				180						

LCM
LCR
LCG
LCW
LCX
STM
STG
STS/STL
STR2
UCA2
ULK*
JSK/M2
JSG
JSC3/JSC4
USSD
UFCD
USC
UB
JSB3
LMB
LML
HCM
HCA
LBC
CAC4
UCAC2
CAC-N
UCAC-N
RCS2
RCC2
PCC
SHC
MCP
GLC
MFC
BBS
RRC
GRC
RV3*
NHS
HRL
LN
Hand
Chuk
MecHnd/Chuk
ShkAbs
FJ
FK
SpdContr
Ending

Dimensions: Option

● Rubber cushion stopper (S1 to S6)

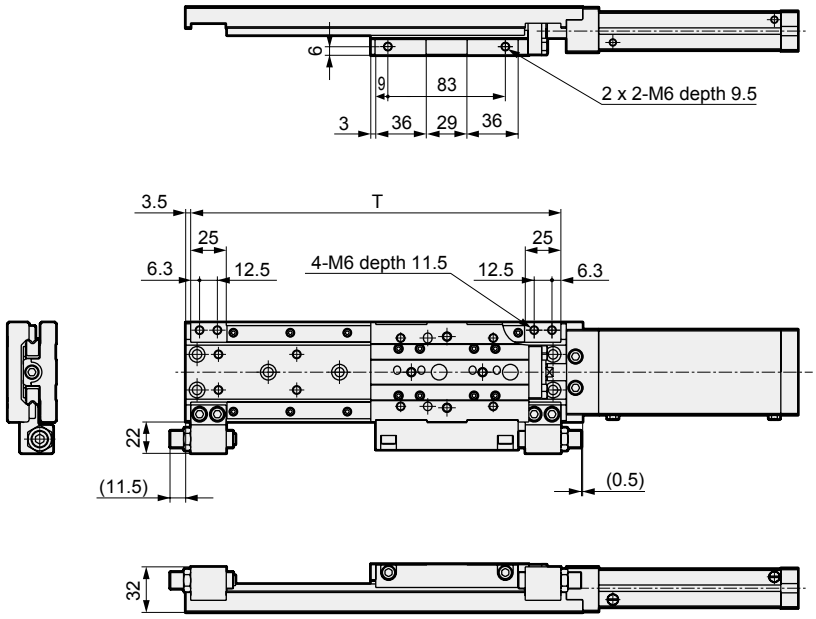

● Metal stopper (M1 to M6)

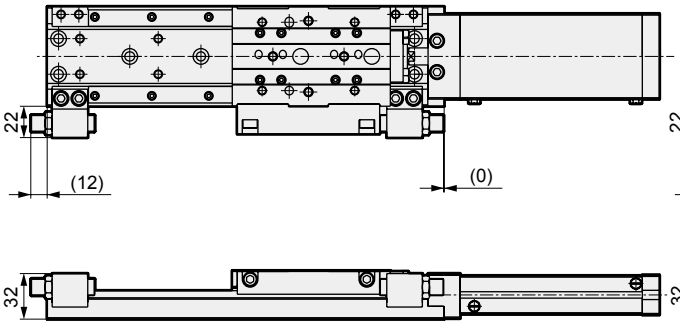

● Shock absorber stopper (A1 to A6)

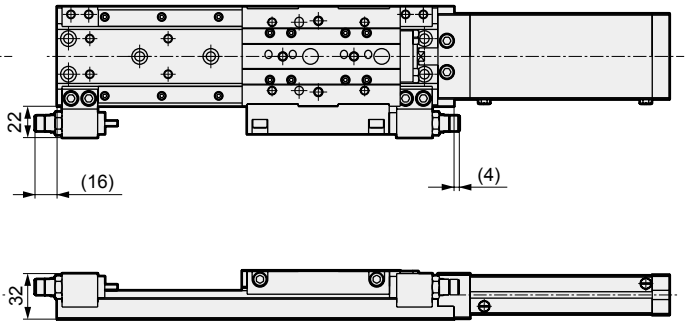

Note: When the adjustable stroke range increases or decreases with the rubber cushion stopper (S1 to S6) or metal stopper (M1 to M6), the dimensions in ( ) increase or decrease accordingly.

Bore size	Stroke length	T	Adjustable stroke range (single side)		
			Cushion stopper	Metal stopper	Shock absorber stopper
ø25	75	235	10	10	7
	100	260			
	125	285			
	150	310			
ø32	75	235			
	100	260			
	125	285			
	150	310			

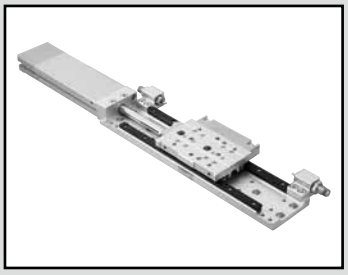

Linear slide cylinder
Double acting/single rod/position locking Long stroke length

LCX-Q-*L Series

● Bore size: ø25/ø32

JIS symbol

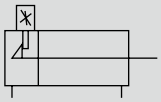

RoHS CAD

Specifications

Item	LCX-Q-*L	
Bore size mm	ø25	ø32
Actuation	Double acting	
Working fluid	Compressed air	
Max. working pressure MPa	0.7 (≈100 psi, 7 bar)	
Min. working pressure MPa	0.15 (≈22 psi, 1.5 bar)	
Proof pressure MPa	1.05 (≈150 psi, 10.5 bar)	
Ambient temperature °C	-10 (14°F) to 60 (140°F) (no freezing) (*1)	
Port size	M5	
Stroke tolerance mm	$^{+2.0}_{0}$ (*2)	
Working piston speed mm/s	20 to 500 (*3)	
Cushion	With rubber cushion	
Holding force N	130	230
Position locking mechanism	Head side	
Lubrication	Not available	
Allowable absorbed energy J	Refer to Table 3 on page 299.	

*1 : Contact CKD if the use environment is always cold (5°C or below) or hot (40°C and above).
*2 : Note that there will be a slight gap between the plate and floating bush if no stopper is attached.
*3 : Keep within 20 to 200 mm/s when using a metal stopper.

Stroke length

Bore size (mm)	Standard stroke length (mm)
ø25	75, 100, 125, 150
ø32	75, 100, 125, 150

Note: Products with stroke lengths other than the above are not available.

Theoretical thrust table

Refer to page 298.

Switch specifications

Item	Reed 2-wire				Proximity 2-wire		Proximity 3-wire		
	T0H/T0V		T5H/T5V		T2H/T2V	T2WH/T2WV	T3H/T3V	T3PH/T3PV	T3WH/T3WV
Applications	For programmable controller, relay		For programmable controller, relay, IC circuit (without indicator lamp), serial connection		Dedicated for programmable controller		For programmable controller, relay		
Output method	-		-		-		NPN output	PNP output	NPN output
Power supply voltage	-		-		-		10 to 28 VDC		
Load voltage	12/24 VDC	110 VAC	5/12/24 VDC	110 VAC	10 to 30 VDC	24 VDC ±10%	30 VDC or less		
Load current	5 to 50 mA	7 to 20 mA	50 mA or less	20 mA or less	5 to 20 mA		100 mA or less		50 mA or less
Indicator lamp	LED (Lit when ON)		Without indicator lamp		LED (Lit when ON)	Red/green LED (Lit when ON)	LED (Lit when ON)	Yellow LED (Lit when ON)	Red/green LED (Lit when ON)
Leakage current	0 mA				1 mA or less		10 μA or less		
Weight g	1 m:18 3 m:49 5 m:80				1 m:18 3 m:49 5 m:80		1 m:18 3 m:49 5 m:80		

*1 : Refer to Ending Page 1 for detailed switch specifications and dimensions.
*2 : Switches other than the above models, such as switches with connectors, are also available. Refer to Ending Page 1.
*3 : The max. load current is 20 mA at 25°C. The current is lower than 20 mA if the operating ambient temperature around the switch is higher than 25°C. (5 to 10 mA at 60°C)

Cylinder weight

● Position locking

Bore size (mm)	Basic Stroke length (mm)			
	75	100	125	150
ø25	1,580	1,720	1,870	2,010
ø32	1,730	1,880	2,030	2,180

● Weight of variation/option (stopper) (Unit: g)

Bore size (mm)	Option/stopper code		
	S1/S2	M1/M2	A1/A2
ø25	320		
ø32			

How to order

Without switch (built-in magnet for switch)

LCX-Q - 25 L - 100 ——— S5

With switch (built-in magnet for switch)

LCX-Q - 25 L - 100 - T2H* - R - S1T

Model No.

Ⓐ Bore size

Ⓑ Stroke length

Ⓒ Switch model No.

Ⓓ Switch quantity

Ⓔ Stopper

Code	Description
Ⓐ Bore size	
25	ø25
32	ø32
Ⓑ Stroke length (mm)	
75	75
100	100
125	125
150	150

Ⓒ Switch model No.

Axial lead wire	Radial lead wire	Contact	Voltage AC	Voltage DC	Indicator lamp	Lead wire
T0H*	**T0V***	Reed	●	●	1-color display	2-wire
T5H*	**T5V***		●	●	Without indicator lamp	
T2H*	**T2V***	Proximity		●	1-color display	2-wire
T3H*	**T3V***			●		3-wire
T3PH*	**T3PV***			●	1-color display (PNP output)	3-wire
T2WH*	**T2WV***			●	2-color display	2-wire
T3WH*	**T3WV***			●		3-wire

*** Lead wire length**	
Blank	1 m (standard)
3	3 m (option)
5	5 m (option)
Ⓓ Switch quantity	
R	1 on rod side
H	1 on head side
D	2
Ⓔ Stopper	
Blank	Without stopper
S Cushion stopper	***1, *4, *7**
S1*	Stopper position① (Stopper mount position)
S2*	Stopper position②
M Metal stopper	***1, *3, *4, *5, *7**
M1*	Stopper position① (Stopper mount position)
M2*	Stopper position②
A Shock absorber stopper	***2, *4, *7**
A1*	Stopper position① (Stopper mount position)
A2*	Stopper position②
*** part**	
Blank	Stopper block material: steel
T	Stopper block material: steel (nitriding) *6

⚠ Precautions for model No. selection

*1 : To change the adjustable stroke length, use the discrete rubber cushion stopper or metal stopper on page 288.
*2 : For the adjustable stroke range with a shock absorber stopper, refer to the stopper dimensions table on page 285.
*3 : The steel stopper block (nitrided) (code: T) is recommended for a metal stopper.
*4 : Combination of the rubber cushion stopper, metal stopper and shock absorber stopper is made to order.
*5 : Keep within 20 to 200 mm/s when using a metal stopper.
*6 : Can be selected for the type with stopper only.
*7 : Do not attach to the stopper positions ③ and ④ since the locking mechanism works at the stroke end.
*8 : The long stroke length has a positioning hole option as standard.
*9 : Refer to page 289 for single cylinder model No.

[Example of model No.]

LCX-Q-25L-100-T2H-R-S1T

Model: Linear slide cylinder
Double acting/position locking LCX-Q
Ⓐ Bore size : ø25
Ⓑ Stroke length : 100 mm
Ⓒ Switch model No. : Proximity/2-wire
Axial lead wire
Ⓓ Switch quantity : 1 on rod side
Ⓔ Stopper : Cushion stopper
Stopper position①
Material, steel (nitriding)

● Stopper position

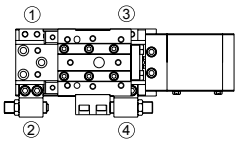

LCM
LCR
LCG
LCW
LCX
STM
STG
STS/STL
STR2
UCA2
ULK*
JSK/M2
JSG
JSC3/JSC4
USSD
UFCD
USC
UB
JSB3
LMB
LML
HCM
HCA
LBC
CAC4
UCAC2
CAC-N
UCAC-N
RCS2
RCC2
PCC
SHC
MCP
GLC
MFC
BBS
RRC
GRC
RV3*
NHS
HRL
LN
Hand
Chuk
MecHnd/Chuk
ShkAbs
FJ
FK
SpdContr
Ending

How to order switch

SW - T2H3

Switch model No.
(Item Ⓒ on page 287)

How to order a stopper set

- Set of a stopper and rubber cushion stopper, metal stopper or shock absorber stopper
- Use when changing from the standard to the type with rubber cushion stopper, metal stopper or shock absorber stopper.

LCX - 25 - S 2 - S02

Bore size
(Item Ⓐ on page 287)

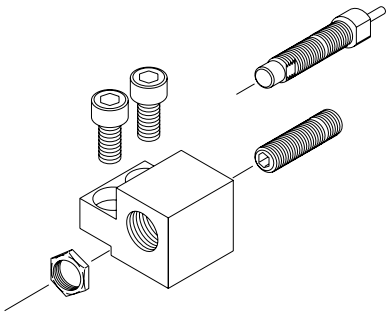

Ⓐ Stopper	
S	Cushion stopper
M	Metal stopper
A	Shock absorber stopper

Ⓑ Stopper installation position	
1	Stopper position①
2	Stopper position②

Ⓒ Adjustable stroke length *1	
Blank	Adjustable stroke range 10 mm
S02	Adjustable stroke range 20 mm

*1: Cannot be selected for the shock absorber stopper "A".

(Unit: g)

Model No.				Weight
LCX	25 32	S1	Blank	70
		S2	S02	80
		M1	Blank	70
		M2	S02	80
		A1 A2	-	70

How to order discrete rubber cushion stopper

- Hexagon socket set screw with urethane
- Use when changing the adjustable stroke range or when using a custom stroke length.

LCX - 25 - S02

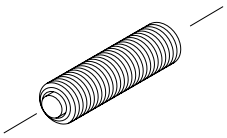

Bore size
(Item Ⓐ on page 287)

Ⓐ Adjustable stroke range	
S01	Single side 10 mm (standard)
S02	Single side 20 mm

(Unit: g)

Model No.			Weight
LCX	25	S01	30
	32	S02	40

How to order discrete metal stopper

- Use when changing the adjustable stroke range or when using a custom stroke length.

LCX - 25 - M02

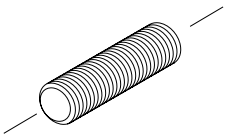

Bore size
(Item Ⓐ on page 287)

Ⓐ Adjustable stroke range	
M01	Single side 10 mm (standard)
M02	Single side 20 mm

(Unit: g)

Model No.			Weight
LCX	25	M01	30
	32	M02	40

LCM
LCR
LCG
LCW
LCX
STM
STG
STS/STL
STR2
UCA2
ULK*
JSK/M2
JSG
JSC3/JSC4
USSD
UFCD
USC
UB
JSB3
LMB
LML
HCM
HCA
LBC
CAC4
UCAC2
CAC-N
UCAC-N
RCS2
RCC2
PCC
SHC
MCP
GLC
MFC
BBS
RRC
GRC
RV3*
NHS
HRL
LN
Hand
Chuk
MecHnd/Chuk
ShkAbs
FJ
FK
SpdContr
Ending

How to order discrete shock absorber stopper

- Set of a shock absorber and stopper cap
- Use when changing from the rubber cushion stopper or metal stopper to the shock absorber stopper.

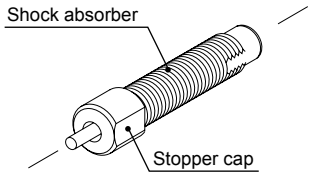

LCX - 25 - A01

Bore size
(Item Ⓐ on page 287)

Note: For the adjustable stroke range with a shock absorber stopper, refer to page 285.

Applicable shock absorber model No.

Model	Shock absorber model No.
LCX-25	NCK-00-1.2
LCX-32	NCK-00-1.2

(Unit: g)

Model No.			Weight
LCX	25 32	A01	30

How to order discrete stopper block

- Use when changing from the standard to the type with rubber cushion stopper, metal stopper or shock absorber stopper.

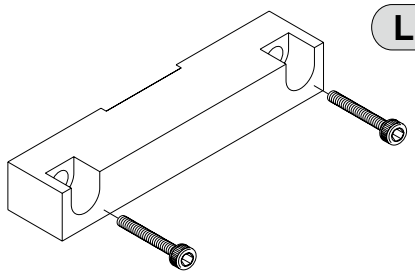

LCX - 25 L - SB3 T

Bore size
(Item Ⓐ on page 287)

Ⓐ Material	
Blank	Stopper block material: steel
T	Stopper block material: steel (nitriding)

(Unit: g)

Model No.			Weight
LCX	25L 32L	SB3(T)	250

How to order positioning bolt

- Hexagon socket head cap screw for positioning
- Enables assembling of the crossed unit and two-stage unit without adjusting the position.

LCX - 25 - J

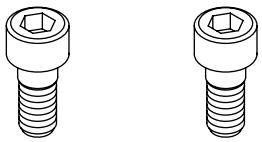

(2 pieces/set)

(Unit: g)

Model No.			Weight
LCX	25	J	10

* Weight per set (2 pieces)

How to order single cylinder

LCX-Q - CYL - 25 L - 100

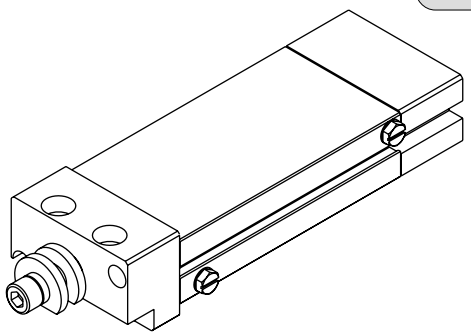

Bore size
(Item Ⓐ on page 287)

Stroke length
(Item Ⓑ on page 287)

LCM
LCR
LCG
LCW
LCX
STM
STG
STS/STL
STR2
UCA2
ULK*
JSK/M2
JSG
JSC3/JSC4
USSD
UFCD
USC
UB
JSB3
LMB
LML
HCM
HCA
LBC
CAC4
UCAC2
CAC-N
UCAC-N
RCS2
RCC2
PCC
SHC
MCP
GLC
MFC
BBS
RRC
GRC
RV3*
NHS
HRL
LN
Hand
Chuk
MecHnd/Chuk
ShkAbs
FJ
FK
SpdContr
Ending

Internal structure and parts list

● LCX

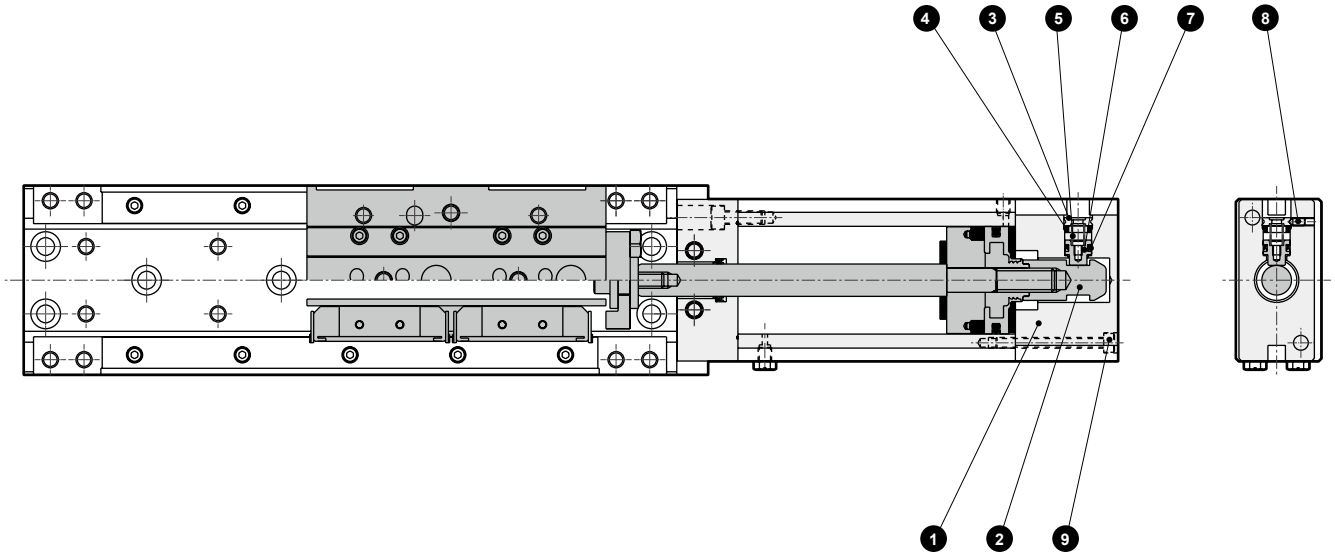

Parts list

No.	Part name	Material	Remarks	No.	Part name	Material	Remarks
1	Head cover	Aluminum alloy	Alumite	6	Stopper piston	Carbon steel	Nitriding
2	Sleeve	Carbon steel	Nitriding	7	Stopper packing	Nitrile rubber	
3	Stopper cover	Stainless steel		8	Hexagon socket set screw	Alloy steel	Black finish
4	Cushion rubber	Urethane rubber		9	Hexagon socket head cap screw	Alloy steel	Zinc chromate
5	Coil spring	Steel					

Repair parts list

Bore size (mm)	Kit No.	Repair parts No.	
		Repair parts for position locking	Basic parts are repair parts
ø25	LCX-Q-25K	4 7	15 16
ø32	LCX-Q-32K		18 21

Note: The repair part numbers for base section correspond to those of the double acting/single rod/long stroke length on page 282.

Dimensions

● Double acting/position locking/long stroke length LCX-Q-*L

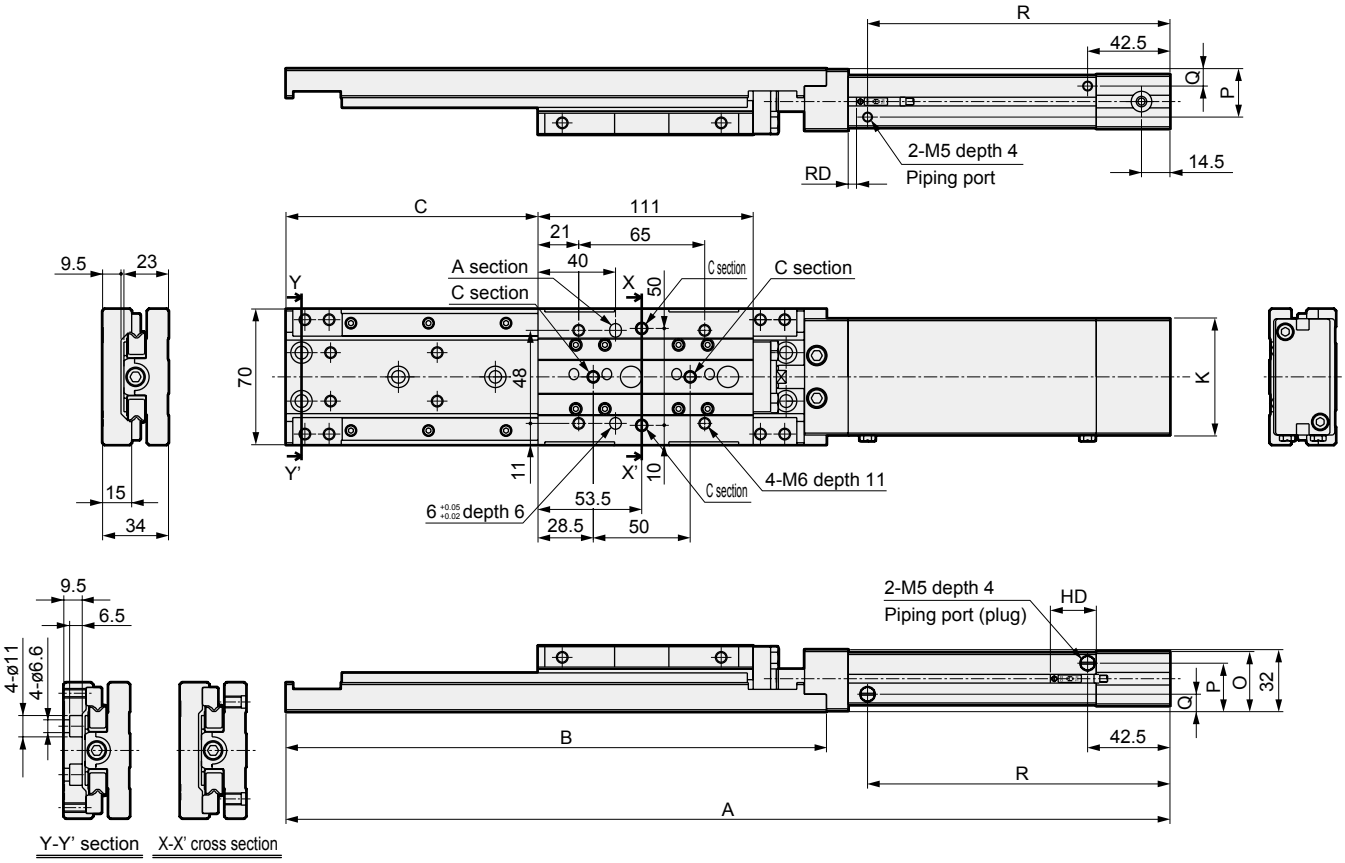

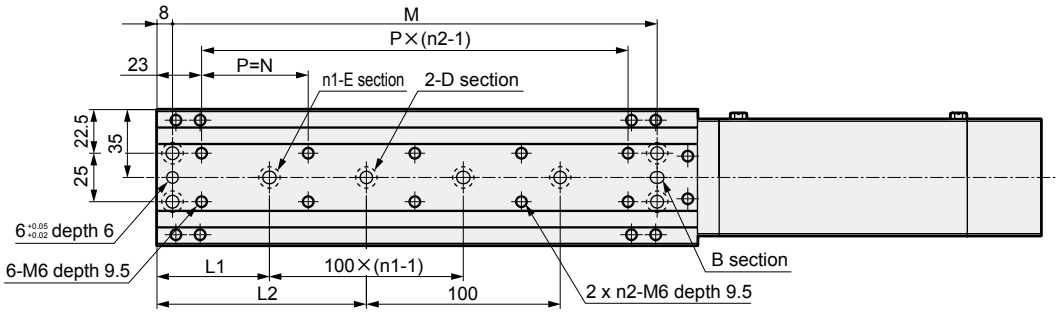

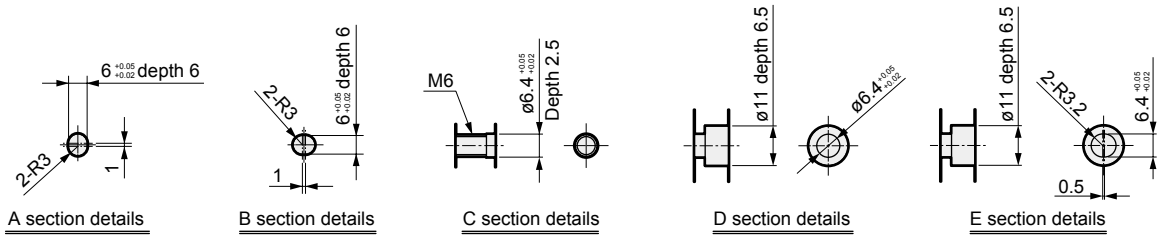

Bore size	Stroke length	A	B	C	K	L1	L2	n1	n2	M	N	O	P	Q	R	RD			HD		
																T0*	T2*	T2W*	T0*	T2*	T2W*
																T5*	T3*	T3W*	T5*	T3*	T3W*
ø25	75	406	254	105	50	45.5	95.5	2	5	225	49	29.5	24.5	9.5	131	5		6.5	23.5		21.5
	100	456	279	130		58	108	2	5	250	55				156						
	125	506	304	155		45.5	95.5	3	6	275	49				181						
	150	556	329	180		58	108	3	6	300	54				206						
ø32	75	406	254	105	60	45.5	95.5	2	5	225	49	31	25	9	131						
	100	456	279	130		58	108	2	5	250	55				156						
	125	506	304	155		45.5	95.5	3	6	275	49				181						
	150	556	329	180		58	108	3	6	300	54				206						

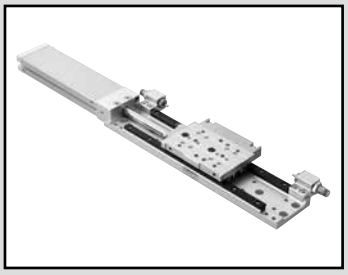

Linear slide cylinder double acting/single rod
Clean-room specifications/long stroke length

LCX-*L-P7* Series

● Bore size: ø25/ø32

JIS symbol

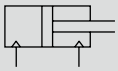

RoHS CAD

Specifications

Item	LCX-*L-P7*	
Bore size mm	ø25	ø32
Actuation	Double acting	
Working fluid	Compressed air	
Max. working pressure MPa	0.7 (≈100 psi, 7 bar)	
Min. working pressure MPa	0.15 (≈22 psi, 1.5 bar)	
Proof pressure MPa	1.05 (≈150 psi, 10.5 bar)	
Ambient temperature °C	-10 (14°F) to 60 (140°F) (no freezing) (*1)	
Port size	M5	
Pressure relief port size	M5	
Stroke tolerance mm	$^{+2.0}_{0}$ (*2)	
Working piston speed mm/s	20 to 500	
Cushion	With rubber cushion	
Lubrication	Not available	
Allowable absorbed energy J	Refer to Table 3 on page 299.	

*1: Contact CKD if the use environment is always cold (5°C or below) or hot (40°C and above).
*2: Note that there will be a slight gap between the plate and floating bush if no stopper is attached.
*3: Keep within 20 to 200 mm/s when using a metal stopper.

Stroke length

Bore size (mm)	Standard stroke length (mm)
ø25	75, 100, 125, 150
ø32	75, 100, 125, 150

Note: Products with stroke lengths other than the above are not available.

Theoretical thrust table

Refer to page 298.

Switch specifications

Item	Reed 2-wire				Proximity 2-wire		Proximity 3-wire		
	T0H/T0V		T5H/T5V		T2H/T2V	T2WH/T2WV	T3H/T3V	T3PH/T3PV	T3WH/T3WV
Applications	For programmable controller, relay		For programmable controller, relay, IC circuit (without indicator lamp), serial connection		Dedicated for programmable controller		For programmable controller, relay		
Output method	-		-		-		NPN output	PNP output	NPN output
Power supply voltage	-		-		-		10 to 28 VDC		
Load voltage	12/24 VDC	110 VAC	5/12/24 VDC	110 VAC	10 to 30 VDC	24 VDC ±10%	30 VDC or less		
Load current	5 to 50 mA	7 to 20 mA	50 mA or less	20 mA or less	5 to 20 mA		100 mA or less		50 mA or less
Indicator lamp	LED (Lit when ON)		Without indicator lamp		LED (Lit when ON)	Red/green LED (Lit when ON)	LED (Lit when ON)	Yellow LED (Lit when ON)	Red/green LED (Lit when ON)
Leakage current	0 mA				1 mA or less		10 μA or less		
Weight g	1 m:18 3 m:49 5 m:80				1 m:18 3 m:49 5 m:80		1 m:18 3 m:49 5 m:80		

*1 : Refer to Ending Page 1 for detailed switch specifications and dimensions.
*2 : Switches other than the above models, such as switches with connectors, are also available. Refer to Ending Page 1.
*3 : The max. load current is 20 mA at 25°C. The current is lower than 20 mA if the operating ambient temperature around the switch is higher than 25°C. (5 to 10 mA at 60°C)

Cylinder weight

● Clean-room specifications (Unit: g)

Bore size (mm)	Basic Stroke length (mm)			
	75	100	125	150
ø25	1,530	1,670	1,820	1,960
ø32	1,660	1,810	1,960	2,110

● Weight of variation/option (stopper) (Unit: g)

Bore size (mm)	Option/stopper code			
	S1 to S4	M1 to M4	S5/S6	M5/M6
ø25	320		400	
ø32				

How to order

Without switch (built-in magnet for switch)

LCX - 25 L - 100 ——— S5 P72

With switch (built-in magnet for switch)

LCX - 25 L - 100 - T2H* - R - S1T P72

Model No.

Ⓐ Bore size

Ⓑ Stroke length

Ⓒ Switch model No.

Ⓓ Switch quantity

Ⓔ Stopper

Ⓕ Clean-room specifications

Code	Description
Ⓐ Bore size	
25	ø25
32	ø32

Ⓑ Stroke length (mm)	
75	75
100	100
125	125
150	150

Ⓒ Switch model No.

Axial lead wire	Radial lead wire	Contact	Voltage AC	Voltage DC	Indicator lamp	Lead wire
T0H*	**T0V***	Reed	●	●	1-color display	2-wire
T5H*	**T5V***	Reed	●	●	Without indicator lamp	2-wire
T2H*	**T2V***	Proximity		●	1-color display	2-wire
T3H*	**T3V***	Proximity		●	1-color display	3-wire
T3PH*	**T3PV***	Proximity		●	1-color display (PNP output)	3-wire
T2WH*	**T2WV***	Proximity		●	2-color display	2-wire
T3WH*	**T3WV***	Proximity		●	2-color display	3-wire

*** Lead wire length**	
Blank	1 m (standard)
3	3 m (option)
5	5 m (option)

Ⓓ Switch quantity	
R	1 on rod side
H	1 on head side
D	2

Ⓔ Stopper		
Blank	Without stopper	
S Cushion stopper		***1, *4**
S1*	Stopper position ① (can be changed to ④)	Stopper installation position
S2*	Stopper position ② (can be changed to ③)	Stopper installation position
S3*	Stopper position ③ (can be changed to ②)	Stopper installation position
S4*	Stopper position ④ (can be changed to ①)	Stopper installation position
S5*	Stopper position ①,③	Stopper installation position
S6*	Stopper position ②,④	Stopper installation position
M Metal stopper		***1, *3, *4, *5**
M1*	Stopper position ① (can be changed to ④)	Stopper installation position
M2*	Stopper position ② (can be changed to ③)	Stopper installation position
M3*	Stopper position ③ (can be changed to ②)	Stopper installation position
M4*	Stopper position ④ (can be changed to ①)	Stopper installation position
M5*	Stopper position ①,③	Stopper installation position
M6*	Stopper position ②,④	Stopper installation position
*** part**		
Blank	Stopper block material: steel	
T	Stopper block material: steel (nitriding)	*2

Ⓕ Clean-room specifications	
	Structure
P72	Exhaust port
P73	Vacuum treatment

Precautions for model No. selection

*1 : To change the adjustable stroke length, use the discrete rubber cushion stopper or metal stopper on page 294.
*2 : Can be selected for the type with stopper only.
*3 : The steel stopper block (nitrided) (code: T) is recommended for a metal stopper.
*4 : Combination of the rubber cushion stopper and metal stopper is made to order.
*5 : Keep within 20 to 200 mm/s when using a metal stopper.
*6 : Refer to page 295 for single cylinder model No.
*7 : The long stroke length has a positioning hole option as standard.

[Example of model No.]

LCX-25L-100-T2H-R-S1TP72

Model: Linear slide cylinder
Double acting/single rod
(clean-room specifications) LCX-P7*

Ⓐ Bore size : ø25
Ⓑ Stroke length : 100 mm
Ⓒ Switch model No. : Proximity/2-wire
Axial lead wire
Ⓓ Switch quantity : 1 on rod side
Ⓔ Stopper : Cushion stopper
Stopper position①
Material, steel (nitriding)
Ⓕ Clean-room specifications : Exhaust port

● Stopper position

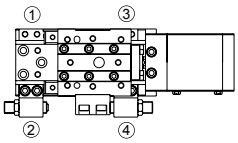

How to order switch

SW - T2H3

Switch model No.
(Item Ⓒ on page 293)

How to order a stopper set

- Set of a stopper and rubber cushion stopper or metal stopper
- Use when changing from the standard to the type with rubber cushion stopper or metal stopper.

LCX - 25 - S 2 - S02

Bore size
(Item Ⓐ on page 293)

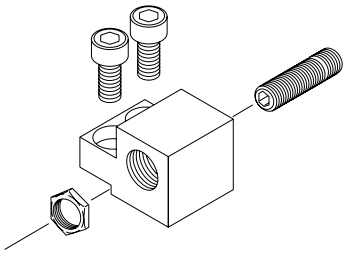

Ⓐ Stopper	
S	Cushion stopper
M	Metal stopper

Ⓑ Stopper installation position	
1	Stopper position for ① or ④
2	Stopper position for ② or ③

Ⓒ Adjustable stroke length *1	
Blank	Adjustable stroke range 10 mm
S02	Adjustable stroke range 20 mm

(Unit: g)

Model No.				Weight
LCX	25 32	S1	Blank	70
		S2	S02	80
		M1	Blank	70
		M2	S02	80
		A1 A2	-	70

How to order discrete rubber cushion stopper

- Hexagon socket set screw with urethane
- Use when changing the adjustable stroke range or when using a custom stroke length.

LCX - 25 - S02

Bore size
(Item Ⓐ on page 293)

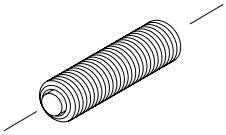

Ⓐ Adjustable stroke range	
S01	Single side 10 mm (standard)
S02	Single side 20 mm

(Unit: g)

Model No.			Weight
LCX	25	S01	30
	32	S02	40

How to order discrete metal stopper

- Use when changing the adjustable stroke range or when using a custom stroke length.

LCX - 25 - M02

Bore size
(Item Ⓐ on page 293)

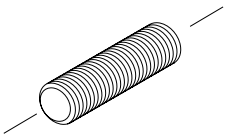

Ⓐ Adjustable stroke range	
M01	Single side 10 mm (standard)
M02	Single side 20 mm

(Unit: g)

Model No.			Weight
LCX	25	M01	30
	32	M02	40

How to order discrete stopper block

● Use when changing from the standard to the type with rubber cushion stopper or metal stopper.

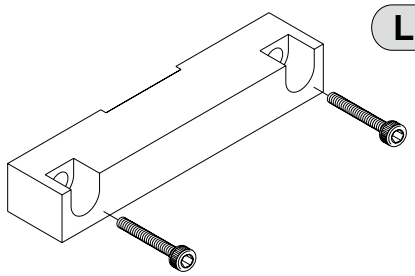

LCX - 25 L - SB3 T

Bore size
(Item Ⓐ on page 293)

Ⓐ Material	
Blank	Stopper block material: steel
T	Stopper block material: steel (nitriding)

(Unit: g)

Model No.			Weight
LCX	25L 32L	SB3(T)	250

How to order positioning bolt

● Hexagon socket head cap screw for positioning
● Enables assembling of the crossed unit and two-stage unit without adjusting the position.

LCX - 25 - J

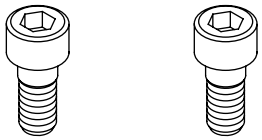

(2 pieces/set)

(Unit: g)

Model No.			Weight
LCX	25	J	10

* Weight per set (2 pieces)

How to order single cylinder

LCX - CYL - 25 L - 100 - P72

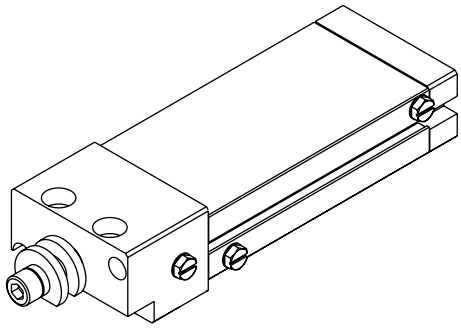

Bore size
(Item Ⓐ on page 293)

Stroke length
(Item Ⓑ on page 293)

Ⓐ Variation	
P72	Clean-room specifications (exhaust port)
P73	Clean-room specifications (vacuum treatment)

Dimensions

● Double acting/single rod/clean-room specifications/long stroke length LCX-*L-P7*

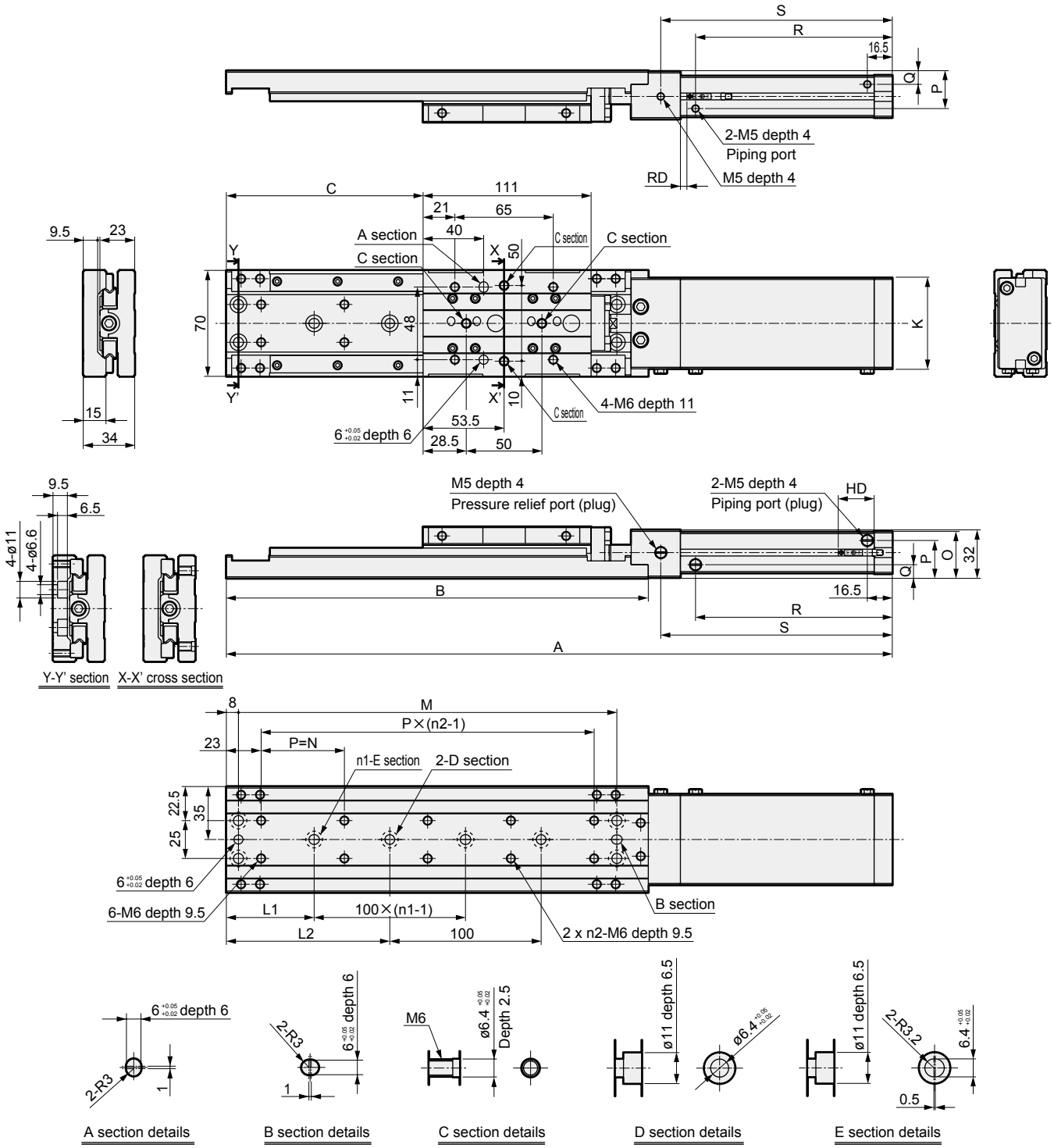

Bore size	Stroke length	A	B	C	K	L1	L2	n1	n2	M	N	O	P	Q	R	S	RD T0* T5*	RD T2* T3*	RD T2W* T3W*	HD T0* T5*	HD T2* T3*	HD T2W* T3W*
ø25	75	390	254	105	50	45.5	95.5	2	5	225	49	29.5	24.5	9.5	105	128	5	6.5		23.5		21.5
	100	440	279	130		58	108	2	5	250	55				130	153						
	125	490	304	155		45.5	95.5	3	6	275	49				155	178						
	150	540	329	180		58	108	3	6	300	54				180	203						
ø32	75	390	254	105	60	45.5	95.5	2	5	225	49	31	25	9	105	128						
	100	440	279	130		58	108	2	5	250	55				130	153						
	125	490	304	155		45.5	95.5	3	6	275	49				155	178						
	150	540	329	180		58	108	3	6	300	54				180	203						

Unit example

● Crossed unit

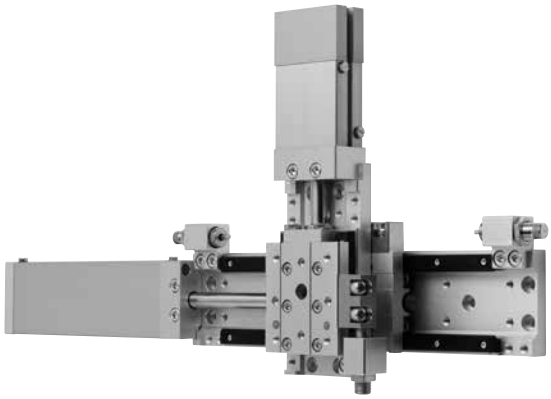

How to assemble

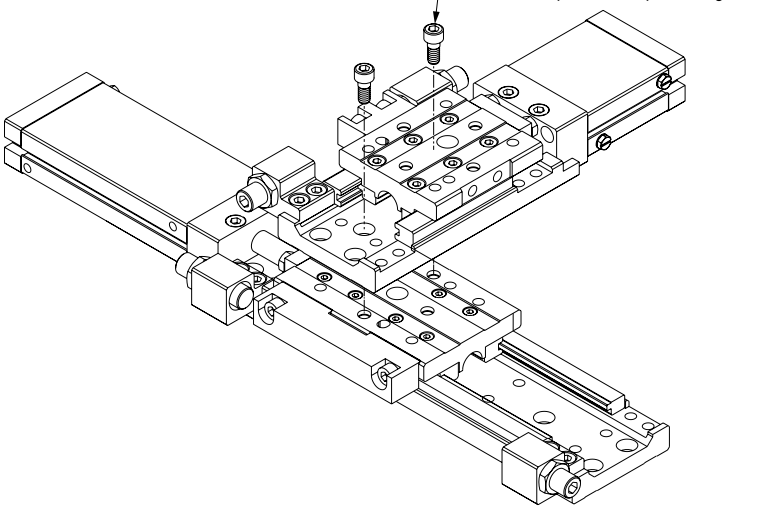

● 2-stage unit

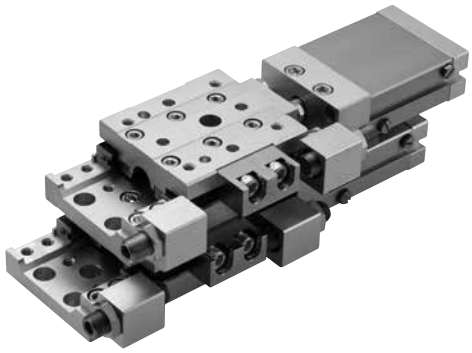

How to assemble

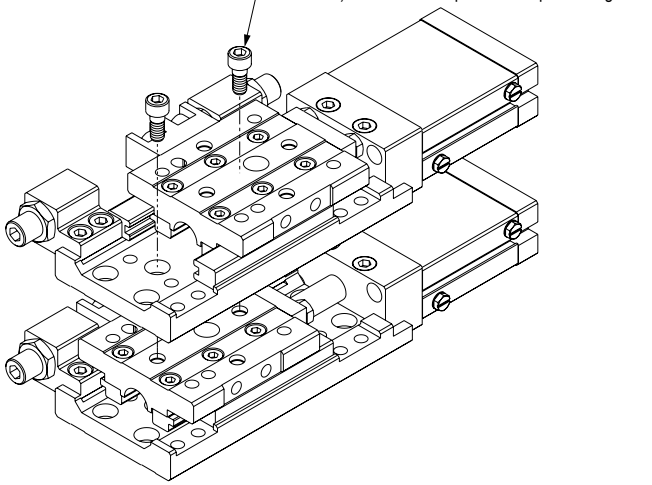

[Fastening with positioning bolt]

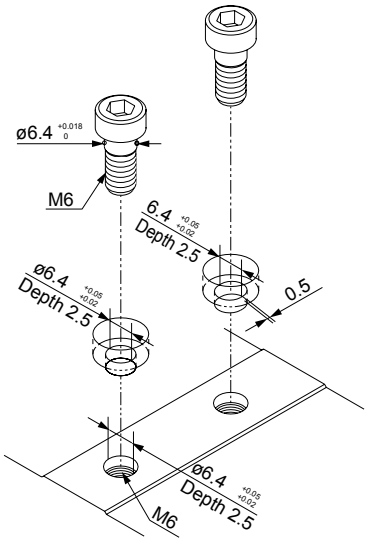

LCM
LCR
LCG
LCW
LCX
STM
STG
STS/STL
STR2
UCA2
ULK*
JSK/M2
JSG
JSC3/JSC4
USSD
UFCD
USC
UB
JSB3
LMB
LML
HCM
HCA
LBC
CAC4
UCAC2
CAC-N
UCAC-N
RCS2
RCC2
PCC
SHC
MCP
GLC
MFC
BBS
RRC
GRC
RV3*
NHS
HRL
LN
Hand
Chuk
MecHnd/Chuk
ShkAbs
FJ
FK
SpdContr
Ending

STEP 1

Calculate the load factor and decide the bore size.

$$\alpha = \frac{F_0}{F} \times 100\ [\%]$$

α : Load factor

F_0 : Force (N) required to move the workpiece

F : Cylinder theoretical thrust (N) [Table 1]

For horizontal operation	For vertical operation
$F_0 = F_W$	$F_0 = W + F_W$
FW: W x 0.2 Note (N)	
W: Load (N)	

Note: Coefficient of friction

[Table 1] Theoretical thrust table (Unit: N)

Bore size	Operating direction	Working pressure MPa						
		0.15	0.2	0.3	0.4	0.5	0.6	0.7
ø25 or equiv.	PUSH	74	99	148	197	246	296	345
	PULL	57	76	114	152	190	228	266
ø32 or equiv.	PUSH	116	155	233	310	388	466	543
	PULL	99	133	199	265	332	398	464

[Table 2] Load factor guidelines

Working pressure MPa	Load factor (%)
0.2 to 0.3	α ≤ 40
0.3 to 0.6	α ≤ 50
0.6 to 0.7	α ≤ 60

STEP 2

Obtain the stroke end speed (Vm) and G coefficient.

Obtain the stroke end speed (Vm) and G coefficient from the average speed (Va) and load factor obtained in STEP 1.

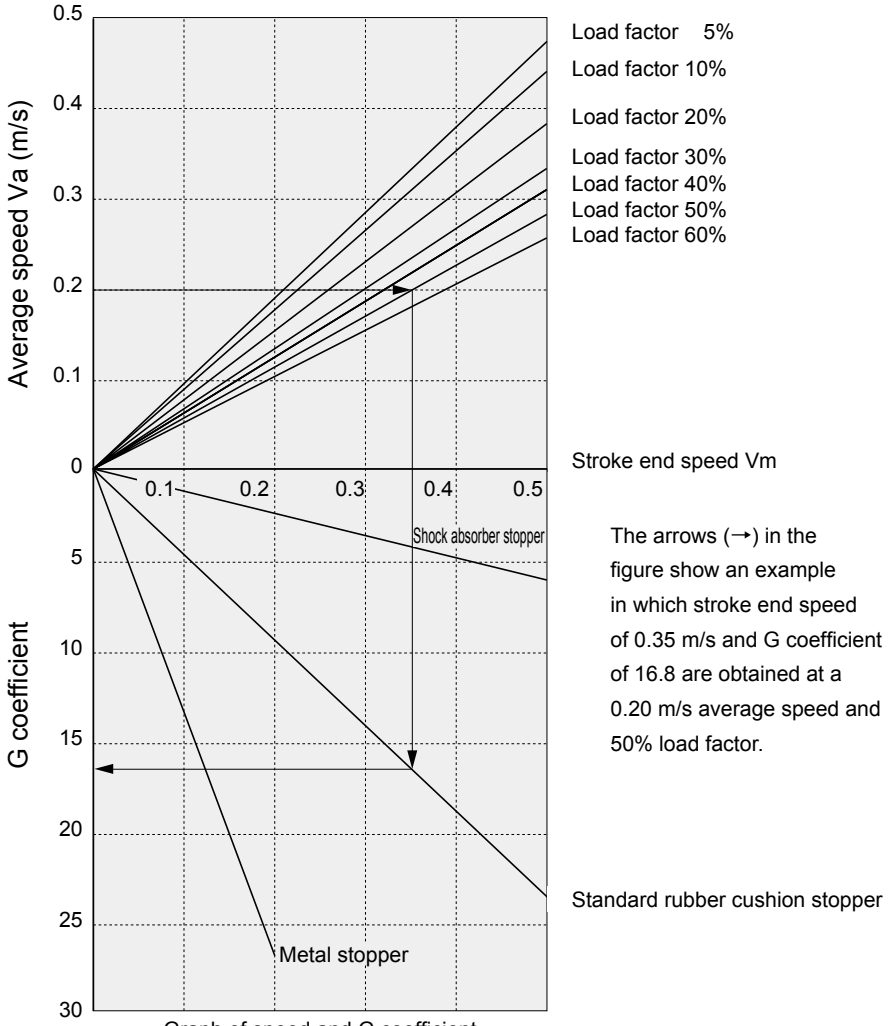

The arrows (→) in the figure show an example in which stroke end speed of 0.35 m/s and G coefficient of 16.8 are obtained at a 0.20 m/s average speed and 50% load factor.

Graph of speed and G coefficient

G coefficient = [ ]

LCM
LCR
LCG
LCW
LCX
STM
STG
STS/STL
STR2
UCA2
ULK*
JSK/M2
JSG
JSC3/JSC4
USSD
UFCD
USC
UB
JSB3
LMB
LML
HCM
HCA
LBC
CAC4
UCAC2
CAC-N
UCAC-N
RCS2
RCC2
PCC
SHC
MCP
GLC
MFC
BBS
RRC
GRC
RV3*
NHS
HRL
LN
Hand
Chuk
MecHnd/Chuk
ShkAbs
FJ
FK
SpdContr
Ending

STEP 3

Check the allowable absorbed energy.

$$E = \frac{1}{2} \times (m + m_\alpha) \times Vm^2$$

E : Kinetic energy at workpiece end (J)

m : Load weight (kg) ($m \approx \frac{W(N)}{9.8}$)

m_α : Table weight (from Table 4)

Vm : Stroke end speed (m/s)

E max : Max. allowable value of E_0 (from Table 3)

Confirm E ≤ E max.

[Table 3] LCX allowable absorbed energy (E_0)

Bore size	Standard (J)	Cushion stopper (J)	Metal stopper (J)	Shock absorber stopper (J)
ø25	0.34	0.14	0.07	1.3
ø32				

[Table 4] Table weight (unit: kg)

Bore size	Stroke length (mm)								
	10	20	30	40	50	75	100	125	150
ø25	0.030			0.035					
ø32									

STEP 4

Obtain M'T (resultant moment at rest).

Calculate the load (moment) and the moment of impact occurring at the stroke end and obtain M'T (resultant moment at rest).

● Vertical load: W' (N)

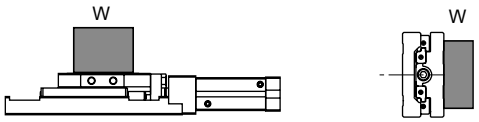

W' = W

● Bending moment: M1' (N·m)

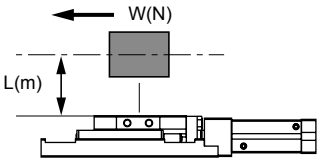

M1' = L × W

● Radial moment: M2' (N·m)

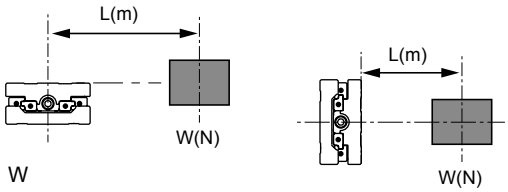

M2' = L × W

● Torsion moment: M3' (N·m)

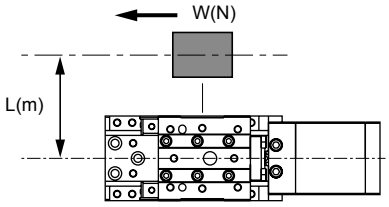

M3' = L × W

W' = ☐ (N)

M1' x G = ☐ (N·m)

M2' = ☐ (N·m)

M3' x G = ☐ (N·m)

$$M'_T = \frac{W'}{W'max} + \frac{M1' \times G}{M1'max} + \frac{M2'}{M2'max} + \frac{M3' \times G}{M3'max} = \square$$

M'T : Synthesis of moment

G : G coefficient

W'max : Max. allowable value of W' (from Table 5)

M1'max : Max. allowable value of M1' (from Table 5)

M2'max : Max. allowable value of M2' (from Table 5)

M3'max : Max. allowable value of M3' (from Table 5)

[Table 5] Allowable static load

Bore size	Stroke length	Vertical load W'max (N)	Bending moment M1'max (N·m)	Radial moment M2'max (N·m)	Torsion moment M3'max (N·m)
ø25	10, 20, 30, 40, 50	670	52	110	52
ø32					
ø25	75, 100, 125, 150	970	128	116	128
ø32					

Confirm M'T ≤ 1.

LCM
LCR
LCG
LCW
LCX
STM
STG
STS/STL
STR2
UCA2
ULK*
JSK/M2
JSG
JSC3/JSC4
USSD
UFCD
USC
UB
JSB3
LMB
LML
HCM
HCA
LBC
CAC4
UCAC2
CAC-N
UCAC-N
RCS2
RCC2
PCC
SHC
MCP
GLC
MFC
BBS
RRC
GRC
RV3*
NHS
HRL
LN
Hand
Chuk
MecHnd/Chuk
ShkAbs
FJ
FK
SpdContr
Ending

STEP 5

Obtain M_T (resultant moment during movement). (Note that it differs from that obtained in STEP 4.)

● Vertical load: W (N)

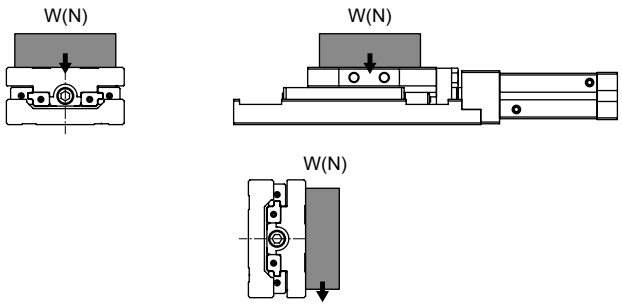

● Bending moment: M1 (N·m)

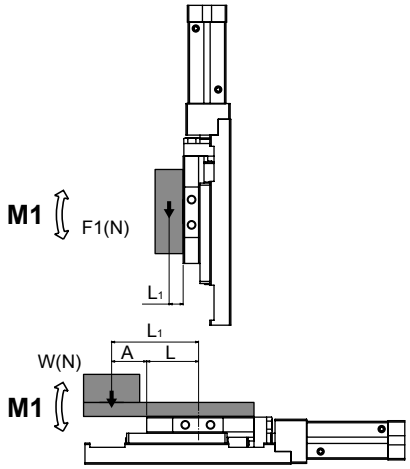

$M1=F1\times L_1$

$M1=W\times L_1$
$L_1=A+L$
L is value in table below

● Radial moment: M2 (N·m)

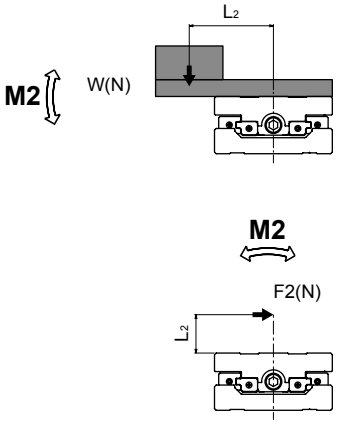

$M2=W\times L_2$

$M2=F2\times L_2$

● Torsion moment: M3 (N·m)

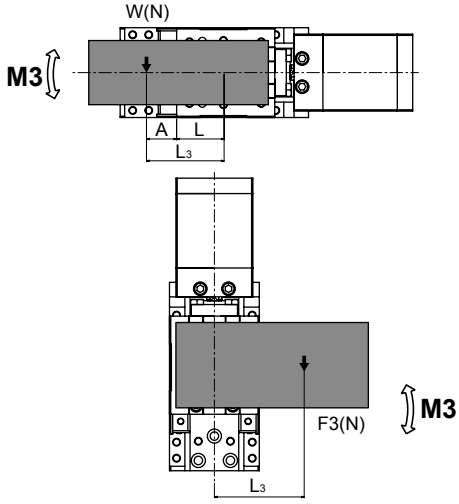

$M3=W\times L_3$
$L_3=A+L$
L is value in table below

$M3=F3\times L_3$

L (length from the table end to the center of the bearing) Unit (m)

Bore size	Stroke length								
	10	20	30	40	50	75	100	125	150
ø25	0.037			0.042		0.0535			
ø32									

W=W = ☐ (N)

M1=M1 = ☐ (N·m)

M2=M2 = ☐ (N·m)

M3=M3 = ☐ (N·m)

M_T : Synthesis of moment

Wmax : Max. allowable value of W (from Table 7)

M1max : Max. allowable value of M1 (from Table 7)

M2max : Max. allowable value of M2 (from Table 7)

M3max : Max. allowable value of M3 (from Table 7)

$$M_T = \frac{W}{Wmax} + \frac{M1}{M1max} + \frac{M2}{M2max} + \frac{M3}{M3max} = \square$$

[Table 7] Allowable running load

Bore size	Stroke length	Vertical load Wmax(N)	Bending moment M1max (N·m)	Radial moment M2max (N·m)	Torsion moment M3max (N·m)
ø25	10, 20, 30, 40, 50	97	7	15	7
ø32					
ø25	75, 100, 125, 150	130	17	16.5	17
ø32					

Can be used when $M_T \leq 1$.

LCM
LCR
LCG
LCW
LCX
STM
STG
STS/STL
STR2
UCA2
ULK*
JSK/M2
JSG
JSC3/JSC4
USSD
UFCD
USC
UB
JSB3
LMB
LML
HCM
HCA
LBC
CAC4
UCAC2
CAC-N
UCAC-N
RCS2
RCC2
PCC
SHC
MCP
GLC
MFC
BBS
RRC
GRC
RV3*
NHS
HRL
LN
Hand
Chuk
MecHnd/Chuk
ShkAbs
FJ
FK
SpdContr
Ending

Displacement at point A

(Displacement of table due to M1, M2 and M3 moments)

M1 moment: Displacement at the table end when load (F1) is applied to the table end

M2 moment: Displacement at the table end (point A) when load (F2) is applied to a point 100 mm away from the center of the cylinder

M3 moment: Displacement angle of the table when rotation moment (M3) is applied to the cylinder

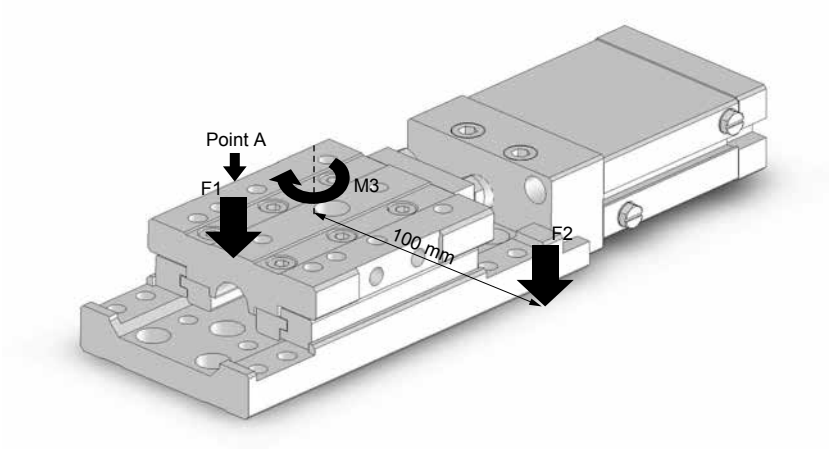

Table displacement for M1 moment

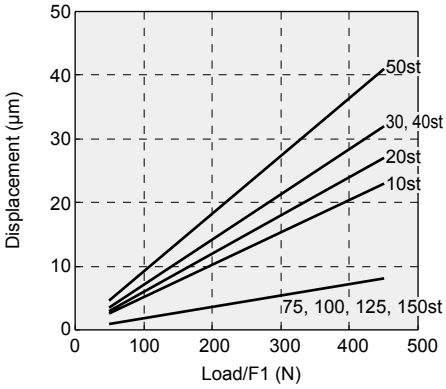

Table displacement for M2 moment

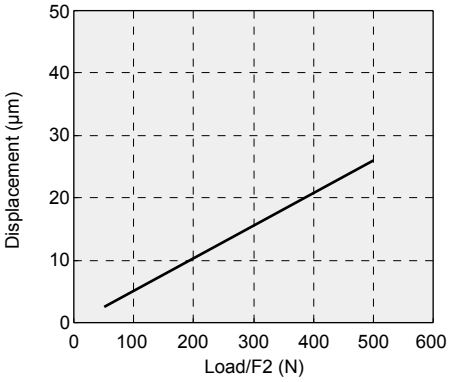

Table displacement for M3 moment

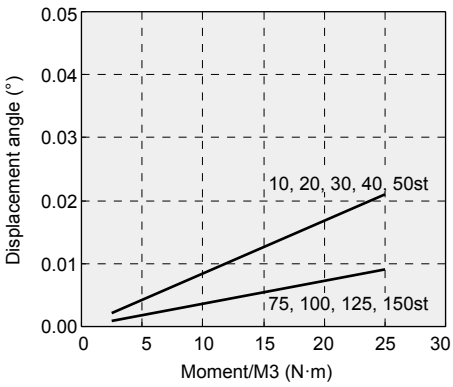

LCM
LCR
LCG
LCW
LCX
STM
STG
STS/STL
STR2
UCA2
ULK*
JSK/M2
JSG
JSC3/JSC4
USSD
UFCD
USC
UB
JSB3
LMB
LML
HCM
HCA
LBC
CAC4
UCAC2
CAC-N
UCAC-N
RCS2
RCC2
PCC
SHC
MCP
GLC
MFC
BBS
RRC
GRC
RV3*
NHS
HRL
LN
Hand
Chuk
MecHnd/Chuk
ShkAbs
FJ
FK
SpdContr
Ending

Selection guide: selection example①

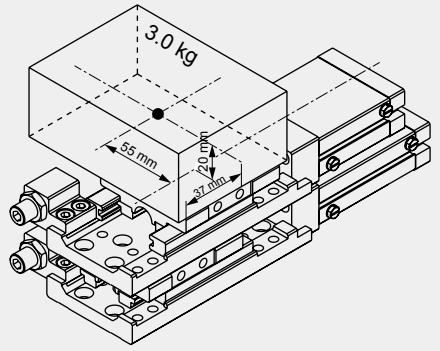

[Operation conditions]

Model used (upper): LCX-25-30-M6 (weight: 1,270 (g))
(lower): LCX-32-30-S6 (weight: 1,440 (g))
Pressure: 0.5 (MPa)
Weight of workpiece: 3.0 (kg)
Operating direction: Horizontal
Average speed (upper): 100 (mm/s)
(lower): 230 (mm/s)
Shape of workpiece: As shown on the left

STEP 1 Checking the load factor and decision on the bore size

(For details on how to calculate, refer to page 298.)

Formula

$\alpha = \frac{F_0}{F} \times 100$ [%]

α : Load factor

F_0 : Force (N) required to move the workpiece

F : Cylinder theoretical thrust (N)

Selection example

[Upper cylinder]

$\alpha 1 = \frac{(3.0 \times 9.8) \times 0.2}{190} \times 100$
$= 3.1\%$

[Lower cylinder]

$\alpha 2 = \frac{\{(3.0 + 1.27 + 0.01) \times 9.8\} \times 0.2}{332}$
$\times 100 = 2.5\%$

Load factor guidelines, at 0.5 MPa

Usable as $\alpha \leq 50$

STEP 2 Checking the stroke end speed and G coefficient

(For details on how to calculate, refer to page 298.)

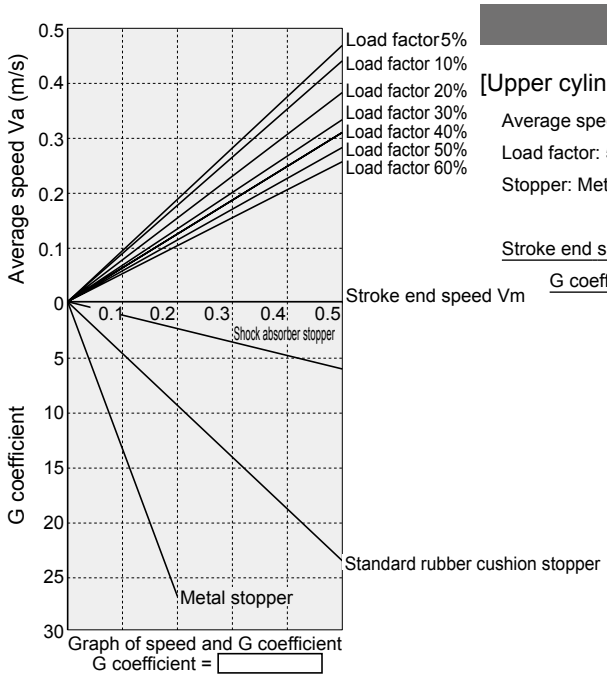

Graph of speed and G coefficient

G coefficient = ☐

Selection example

[Upper cylinder]

Average speed: 100 mm/s
Load factor: 5% or less (3.1%)
Stopper: Metal stopper

⇩

Stroke end speed: 110 mm/s
G coefficient: 14

[Lower cylinder]

Average speed: 230 mm/s
Load factor: 5% or less (2.5%)
Stopper: Rubber cushion stopper

⇩

Stroke end speed: 240 mm/s
G coefficient: 12

STEP 3 Checking the allowable absorbed energy

(For details on how to calculate, refer to page 299.)

Formula

$E = \frac{1}{2} \times (m + m_\alpha) \times Vm^2$

E : Kinetic energy at workpiece end (J)

m : Load weight (kg)

m_α : Table weight (kg)

Vm : Stroke end speed (m/s)

Selection example

[Upper cylinder]

$E = \frac{1}{2} \times (3.0 + 0.03) \times 0.11^2$
$= 0.02$(J)

Can be used since the allowable absorbed energy of the metal stopper is "0.07J".

[Lower cylinder]

$E = \frac{1}{2} \times (3.0 + 1.27 + 0.01 + 0.035)$
$\times 0.24^2 = 0.124$(J)

Can be used since the allowable absorbed energy of the rubber cushion stopper is "0.14J".

LCM
LCR
LCG
LCW
LCX
STM
STG
STS/STL
STR2
UCA2
ULK*
JSK/M2
JSG
JSC3/JSC4
USSD
UFCD
USC
UB
JSB3
LMB
LML
HCM
HCA
LBC
CAC4
UCAC2
CAC-N
UCAC-N
RCS2
RCC2
PCC
SHC
MCP
GLC
MFC
BBS
RRC
GRC
RV3*
NHS
HRL
LN
Hand
Chuk
MecHnd/Chuk
ShkAbs
FJ
FK
SpdContr
Ending

STEP 4 Checking the allowable static load (For details on how to calculate, refer to page 299.)

Formula

● Vertical load

W' = W

● Bending moment: M1' (N·m)

M1' = L_1 x W

● Radial moment: M2' (N·m)

M2' = L_2 x W

● Torsion moment: M3' (N·m)

M3' = L_3 x W

◎ Synthesis of moment

$$M'_T = \frac{W'}{W'max} + \frac{M1' \times G}{M1'max} + \frac{M2'}{M2'max} + \frac{M3' \times G}{M3'max}$$

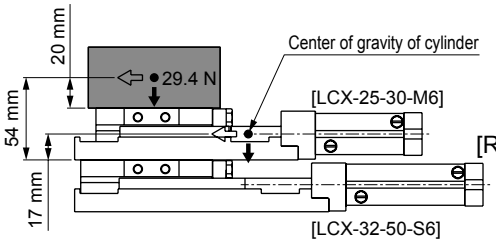

Selection example

[Calculating load and moment]

[Upper cylinder]

W' = 3.0 × 9.8 = 29.4 (N)

M1' = 0.02 × 29.4 = 0.6 (N·m)

M2' = 0.055 × 29.4 = 1.6 (N·m)

M3' = 0.055 × 29.4 = 1.6 (N·m)

[Lower cylinder]

W' = 3.0 × 9.8 + 1.27 × 9.8

= 41.8 (N)

M1' = 0.054 × 29.4

+ 0.017 × 1.27 × 9.8

= 1.8 (N·m)

(Omit the underlined part if the upper cylinder does not work as a moment of impact.)

M2' = 0.055 × 29.4 = 1.6 (N·m)

M3' = 0.055 × 29.4 = 1.6 (N·m)

[Resultant moment when the upper cylinder operates]

Stroke end speed: 110 mm/s, G coefficient: 14

[Upper cylinder]

$$M'_T = \frac{29.4}{670} + \frac{0.6 \times 14}{52} + \frac{1.6}{110} + \frac{1.6 \times 14}{52} = 0.7$$

Can be used since the resultant moment (M'_T) is "1 or less".

[Lower cylinder]

$$M'_T = \frac{41.8}{670} + \frac{1.6 \times 14}{52} + \frac{1.6}{110} + \frac{1.6 \times 14}{52} = 1.0$$

Can be used since the resultant moment (M'_T) is "1 or less".

[Resultant moment when the lower cylinder operates]

Stroke end speed: 240 mm/s, G coefficient: 12

[Upper cylinder]

$$M'_T = \frac{29.4}{670} + \frac{0.6 \times 12}{52} + \frac{1.6}{110} + \frac{1.6 \times 12}{52} = 0.6$$

Can be used since the resultant moment (M'_T) is "1 or less".

[Lower cylinder]

$$M'_T = \frac{41.8}{670} + \frac{1.8 \times 12}{52} + \frac{1.6}{110} + \frac{1.6 \times 12}{52} = 0.9$$

Can be used since the resultant moment (M'_T) is "1 or less".

STEP 5 Checking the allowable dynamic load (For details on how to calculate, refer to page 300.)

Formula

● Vertical load

W = W

● Bending moment: M1 (N·m)

M1 = L_1 × W

● Radial moment: M2 (N·m)

M2 = L_2 × W

● Torsion moment: M3 (N·m)

M3 = L_3 × W

◎ Synthesis of moment

$$M_T = \frac{W}{Wmax} + \frac{M1}{M1max} + \frac{M2}{M2max} + \frac{M3}{M3max}$$

Selection example

[Upper cylinder]

W = 3.0 × 9.8 = 29.4(N)

M1 = 0 (N·m)

M2 = 0.055 × 29.4 = 1.6 (N·m)

M3 = 0 (N·m)

$$M_T = \frac{29.4}{97} + \frac{0}{7} + \frac{1.6}{15} + \frac{0}{7} = 0.4$$

Can be used since the resultant moment (M'_T) is "1 or less".

[Lower cylinder]

W = 3.0 × 9.8 + 1.27 × 9.8

= 41.8(N)

M1 = 0.035 × 29.4 + 0.068 × 1.27 × 9.8

= 1.9 (N·m)

(Add the value of the upper cylinder since it works as a moment. Substitute the center of the external dimensions for the center of gravity of the cylinder.)

M2 = 0.055 × 29.4 = 1.6 (N·m)

M3 = 0 (N·m)

$$M_T = \frac{41.8}{97} + \frac{1.9}{7} + \frac{1.6}{15} + \frac{0}{7} = 0.8$$

Can be used since the resultant moment (M'_T) is "1 or less".

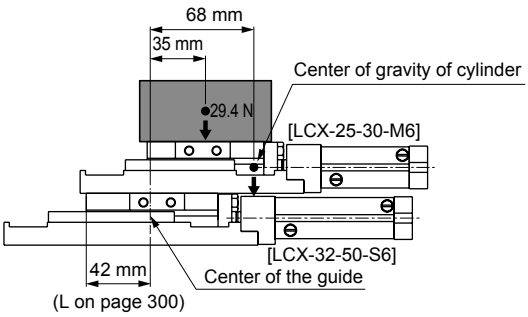

LCM
LCR
LCG
LCW
LCX
STM
STG
STS/STL
STR2
UCA2
ULK*
JSK/M2
JSG
JSC3/JSC4
USSD
UFCD
USC
UB
JSB3
LMB
LML
HCM
HCA
LBC
CAC4
UCAC2
CAC-N
UCAC-N
RCS2
RCC2
PCC
SHC
MCP
GLC
MFC
BBS
RRC
GRC
RV3*
NHS
HRL
LN
Hand
Chuk
MecHnd/Chuk
ShkAbs
FJ
FK
SpdContr
Ending

Selection guide: selection example②

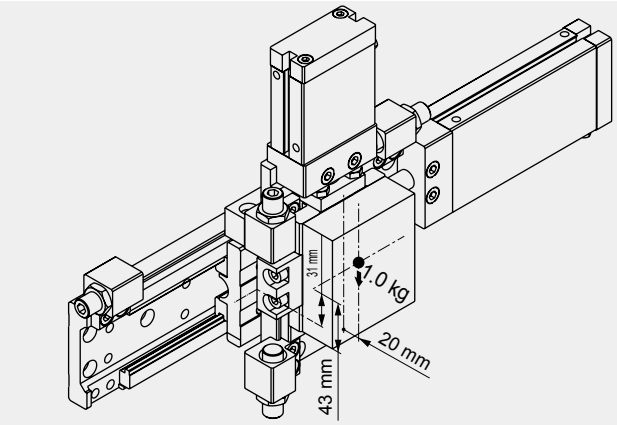

[Operation conditions]

Model used (X-axis): LCX-32-150-A6 (weight: 2,450 (g))
(Z-axis): LCX-32-30-S6 (weight: 1,440 (g))
Pressure: 0.5 (MPa)
Weight of workpiece: 1.0 (kg)
Operating direction: Horizontal + vertical
Average speed (X-axis): 300 (mm/s)
(Z-axis): 50 (mm/s)
Shape of workpiece: As shown on the left

STEP 1 Checking the load factor and decision on the bore size

(For details on how to calculate, refer to page 298.)

Formula

$$\alpha = \frac{F_0}{F} \times 100\ [\%]$$

α : Load factor
F_0 : Force (N) required to move the workpiece
F : Cylinder theoretical thrust (N)

Selection example

[X-axis cylinder]

$$\alpha 1 = \frac{\{(1.0 + 1.29 + 0.01) \times 9.8\} \times 0.2}{332} \times 100 = 1.4\%$$

[Z-axis cylinder]

$$\alpha 2 = \frac{(1.0 \times 9.8) + 0.2 \times (1.0 \times 9.8)}{332} \times 100 = 3.5\%$$

Load factor guidelines, at 0.5 MPa
Usable as α ≤ 50

STEP 2 Checking the stroke end speed and G coefficient

(For details on how to calculate, refer to page 298.)

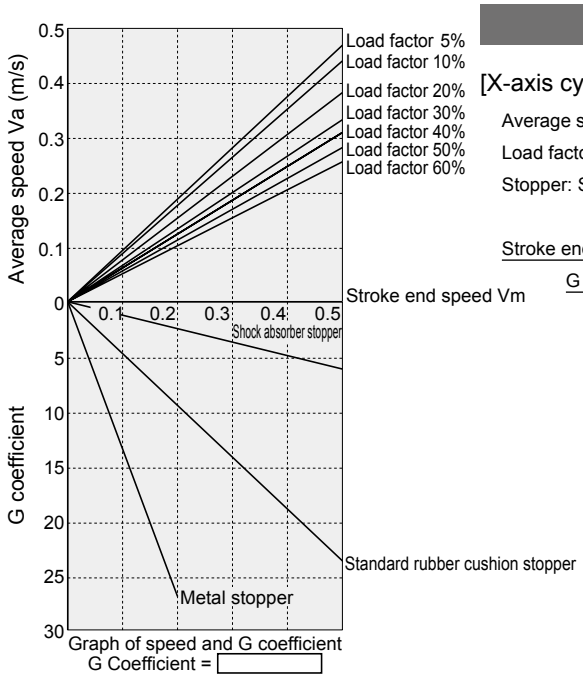

Graph of speed and G coefficient
G Coefficient = [ ]

Selection example

[X-axis cylinder]

Average speed: 300 mm/s
Load factor: 5% or less (1.4%)
Stopper: Shock absorber stopper

⇩

Stroke end speed: 310 mm/s
G coefficient: 4

[Z-axis cylinder]

Average speed: 50 mm/s
Load factor: 5% or less (3.5%)
Stopper: Rubber cushion stopper

⇩

Stroke end speed: 55 mm/s
G coefficient: 3

STEP-3 Checking the allowable absorbed energy

(For details on how to calculate, refer to page 299.)

Formula

$$E = \frac{1}{2} \times (m + m_\alpha) \times Vm^2$$

E : Kinetic energy at workpiece end (J)
m : Load weight (kg)
m_α : Table weight (kg)
Vm : Stroke end speed (m/s)

Selection example

[X-axis cylinder]

$$E = \frac{1}{2} \times (1.0 + 1.29 + 0.01 + 0.035) \times 0.31^2 = 0.11(J)$$

Can be used since the allowable absorbed energy of the shock absorber stopper is "1.3J".

[Z-axis cylinder]

$$E = \frac{1}{2} \times (1.0 + 0.035) \times 0.055^2 = 0.002(J)$$

Can be used since the allowable absorbed energy of the rubber cushion stopper is "0.14J".

STEP 4 Checking the allowable static load (For details on how to calculate, refer to page 299.)

Formula

● Vertical load

W' = W

● Bending moment: M1' (N·m)

M1' = L_1 x W

● Radial moment: M2' (N·m)

M2' = L_2 x W

● Torsion moment: M3' (N·m)

M3' = L_3 x W

◎ Synthesis of moment

$$M'_T = \frac{W'}{W'max} + \frac{M1' \times G}{M1'max} + \frac{M2'}{M2'max} + \frac{M3' \times G}{M3'max}$$

Note) In the crossed unit, a moment of impact may occur in the M2 direction. Multiply the G coefficient with the M2' value as necessary.

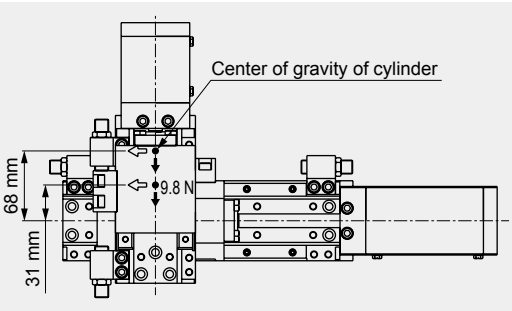

Selection example

[Calculating load and moment]

[X-axis cylinder]

W' = 1.0 × 9.8 + 1.44 × 9.8 = 23.9 (N)

M1' = 0.054 x 9.8 + 0.017 x 1.44 x 9.8

= 0.8 (N·m)

(Add the value of the Z-axis cylinder since it works as a moment.)

M2' = 0.054 x 9.8 + 0.017 x 1.44 x 9.8

= 0.8 (N·m)

M3' = 0.031 x 9.8 + 0.068 x 1.44 x 9.8

= 1.3 (N·m)

[Z-axis cylinder]

W' = 0(N)

M1' = 0.02 × 9.8 = 0.2 (N·m)

M2' = 0.02 × 9.8 = 0.2 (N·m)

M3' = 0.001 × 9.8 = 0.01 (N·m)

[Resultant moment when the X-axis cylinder operates]

Stroke end speed: 310 mm/s, G coefficient: 4

[X-axis cylinder]

$$M'_T = \frac{23.9}{970} + \frac{0.8\times4}{128} + \frac{0.8}{116} + \frac{1.3\times4}{128}$$

= 0.1

Can be used since the resultant moment (M'_T) is "1 or less".

[Z-axis cylinder]

$$M'_T = \frac{0}{670} + \frac{0.2}{52} + \frac{0.2\times4}{110} + \frac{0.01\times4}{52}$$

= 0.01

(Multiply the G coefficient if moment of impact in M2 direction is caused in the Z-axis cylinder by operation of the X-axis cylinder.)

Can be used since the resultant moment (M'_T) is "1 or less".

[Resultant moment when the Z-axis cylinder operates]

Stroke end speed: 55 mm/s, G coefficient: 3

[X-axis cylinder]

$$M'_T = \frac{23.9}{970} + \frac{0}{128} + \frac{0.5\times3+0.2}{116} + \frac{0}{128}$$

= 0.04

(Multiply the G coefficient if moment of impact in M2 direction is caused in the X-axis cylinder by operation of the Z-axis cylinder.)

Can be used since the resultant moment (M'_T) is "1 or less".

[Z-axis cylinder]

$$M'_T = \frac{0}{670} + \frac{0.2\times3}{52} + \frac{0}{110} + \frac{0}{52}$$

= 0.01

Can be used since the resultant moment (M'_T) is "1 or less".

STEP 5 Checking the allowable dynamic load (For details on how to calculate, refer to page 300.)

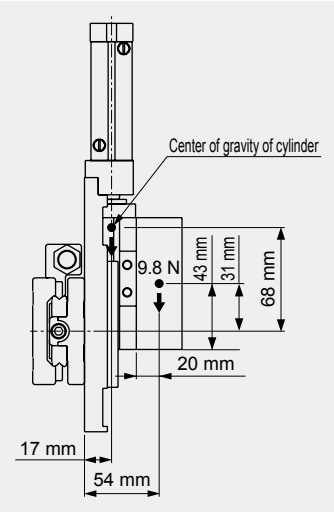

Formula

● Vertical load

W = W

● Bending moment: M1 (N·m)

M1 = L_1 × W

● Radial moment: M2 (N·m)

M2 = L_2 × W

● Torsion moment: M3 (N·m)

M3 = L_3 × W

◎ Synthesis of moment

$$M_T = \frac{W}{Wmax} + \frac{M1}{M1max} + \frac{M2}{M2max} + \frac{M3}{M3max}$$

Selection example

[X-axis cylinder]

W = 1.0 × 9.8 + 1.44 × 9.8

= 23.9(N)

M1 = 0 (N·m)

M2 = 0.054 × 9.8 + 0.017 × 1.44 × 9.8

= 0.8 (N·m)

M3 = 0 (N·m)

$$M_T = \frac{23.9}{130} + \frac{0}{17} + \frac{0.8}{16.5} + \frac{0}{17}$$

= 0.2

Can be used since the resultant moment (M'_T) is "1 or less".

[Z-axis cylinder]

W = 0(N)

M1 = 0.02 × 9.8 = 0.2 (N·m)

M2 = 0 (N·m)

M3 = 0 (N·m)

$$M_T = \frac{0}{97} + \frac{0.2}{7} + \frac{0}{15} + \frac{0}{7}$$

= 0.03

Can be used since the resultant moment (M'_T) is "1 or less".

Pneumatic components

Safety Precautions

Be sure to read this section before use.
Refer to Intro Page 73 for general information of the cylinder, and to Intro Page 80 for general information of the cylinder switch.

Product-specific cautions: Thin linear slide cylinder LCX Series

Design/selection

1. Common

CAUTION

■ When selecting the cylinder, follow the "LCX selection guide" on pages 298 to 301.

■ Protect the cylinder with a cover to prevent damage and malfunction in a place where it is exposed to dripping water or oil, corrosive conditions or much dust.

■ Precautions for type with switch
- Be careful of the lead wire direction when designing the 30 mm or less stroke length of axial lead wire and the 20 mm stroke length of radial lead wire, since a switch is installed in each groove of the body.

■ Keep the supply pressure 0.5 MPa and over when the ambient temperature of the cylinder is 5°C or less.

■ Contact CKD if the use environment is always cold (5°C or below) or hot (40°C and above).

■ The following three types of stopper with stroke adjusting function are available.
- Rubber cushion stopper
  The stopper has an integrated urethane rubber cushion. A stopper allowing contact to the metal part at 0.4 MPa and over for a stable stop position is also available. Contact CKD for details.
- Metal stopper
  The stopper has no cushion mechanism and should be used for low-load and low-speed applications. The stop position is stable since it does not suffer from deformation of a rubber cushion.
- Shock absorber stopper
  The stopper enables smooth and accurate stop with high energy absorption performance and by allowing contact to the metal part.

2. Position locking LCX-Q

CAUTION

■ Do not use 3-position valves.
Avoid using the cylinder in combination with 3-position (especially closed center metal seal) valves. If the port at the side where the lock mechanism is provided is pressurized, the lock cannot be engaged. Even if it is locked once, the air leaked from the valve enters the cylinder, and the lock may be released after a certain period of time.

■ Cylinder load factor must be 50% or less.
If the load factor is high, the lock may not be released, or the lock section may be damaged.

Mounting, installation and adjustment

1. Common; when piping

CAUTION

■ Precautions for piping fittings
Be sure to attach a speed controller during piping before use. The available fittings are as below.

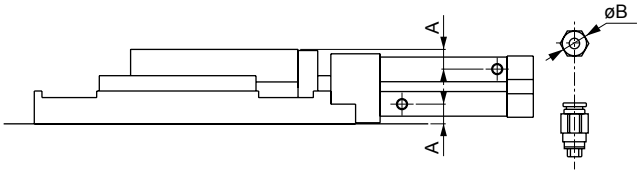

Item / Bore size (mm)	Port size	Port position dimension A	Applicable fitting	Fitting O.D. B
ø25	M5	9.5	SC3W-M5-4 SC3W-M5-6 GWS4-M5-S GWS4-M5 GWL4-M5 GWS6-M5-S GWS6-M5 GWL6-M5	ø17 or less
ø32		9		

2. Common; when installing

CAUTION

■ The installation surfaces of the base and table have been finished with precision machining to obtain high-precision linear movement.
Therefore, grinding the installation surface of the device to improve flatness will enable more stable high-precision performance. (Recommended flatness: 0.01 mm or less)
Do not damage surface flatness by denting or scratching the mounting surface.

Mounting, installation and adjustment

■ Observe the following bolt insertion lengths and tightening torque when installing the jig on the table or base.
[Fig. 1]

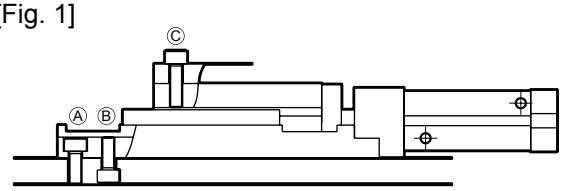

Item	Ⓐ		Ⓑ			Ⓒ		
	Bolt used	Tightening torque (N·m)	Bolt used	Tightening torque (N·m)	Max. insertion	Bolt used	Tightening torque (N·m)	Max. insertion
LCX-25	M6	4.3 to 5.2	M6× 1.0	4.3 to 5.2	9.5 mm	M6× 1.0	4.3 to 5.2	11 mm
LCX-32								

■ Observe the following tightening torque of bolts and nuts of the stopper.
[Fig. A]

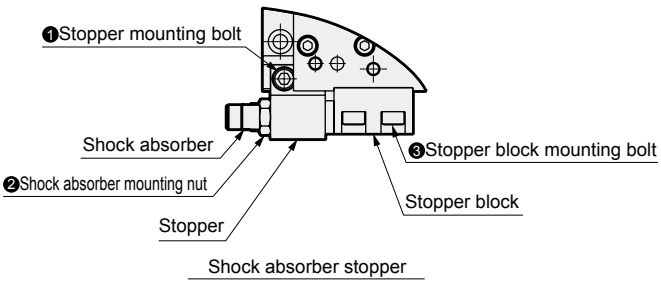

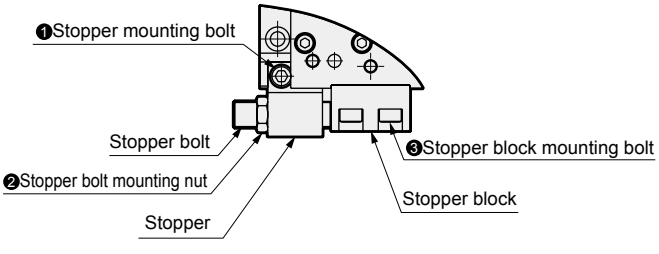

Item	❶Stopper mounting bolt (N·m)	❷Stopper bolt mounting nut ❷Shock absorber mounting nut (N·m)	❸Stopper block mounting bolt (N·m)
LCX-25	4.3 to 5.2	4.5 to 6.0	4.3 to 5.2
LCX-32			

■ The cylinder switch may malfunction if there is a magnetic substance such as a metal plate installed adjacently. To ensure safe operation, keep it 10 mm and over away from the cylinder surface or change the installation surface of the cylinder switch.
(Common for all port sizes)

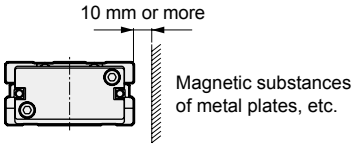

■ The cylinder switches may accidentally function if the cylinders are close to each other. Keep the distance between the surfaces of the cylinders.
(Common for all port sizes)

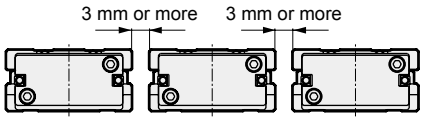

■ CKD's shock absorber is a repair part.
Replace it when the energy absorption performance has degrades or the operation is not smooth.

■ When using a positioning hole, use a pin of dimensions that do not require press fitting. If a pin is press fitted, the load of press fitting may damage or distort the linear guide, lowering the accuracy.
The recommended tolerance of a pin is JIS tolerance m6 or less.

3. Position locking LCX-Q

⚠CAUTION

■ The locking mechanism works at the stroke end. Do not attach a stopper to the stopper positions ③ and ④. If the stopper is engaged on the way of the stroke by the external stopper, the locking mechanism may not work and the piston could fall. When setting a load, make sure to check that the lock mechanism functions before installing the product.

■ Supply pressure equal to or higher than the min. working pressure to the port on the lock mechanism side for each model.

■ When the piping at the side where the lock mechanism is provided is long and thin, or when the speed controller is far away from the cylinder port, note that it takes time to engage the lock. Clogging in the silencer mounted on the EXH. port of the solenoid valve may also cause the same result.

● Stopper position

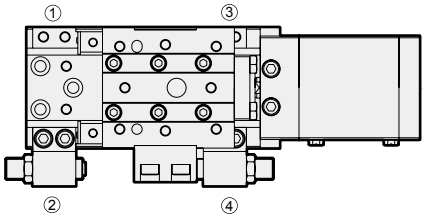

Use/maintenance

1. Common

⚠ CAUTION

■ Apply AFF grease (THK) to the guide rail surface after six months or when the number of operation cycles reaches one million, whichever comes first.

2. Position locking LCX-Q

⚠ WARNING

■ If pressure is supplied to port Ⓐ when both ports are not pressurized and the piston is locked, the lock may not be released or the piston rod may suddenly pop out just after the lock is released. This can be extremely hazardous. To release the lock mechanism, make sure to supply pressure to port Ⓑ. Check that load is not applied to the lock mechanism.

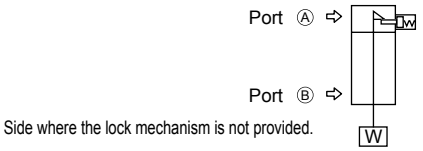

■ For usage where the drop rate is increased using the quick exhaust valve, the lock may not release normally because the cylinder body starts operating before the lock pin. For the position locking cylinder, do not use the quick exhaust valve.

⚠ CAUTION

■ If back pressure is applied to the locking mechanism, the lock may be released. Use a single solenoid valve, or an individual exhaust manifold.

■ After the locking mechanism is manually operated, make sure to return the locking mechanism to the original state before use. Do not perform manual operation except for adjustment, as it is dangerous.

■ When mounting or adjusting the cylinder, release the lock. If mounting work, etc., is done while the lock is engaged, the lock part may be damaged.

■ Do not use multiple synchronized cylinders.
Do not use so that 1 workpiece is moved by synchronizing 2 or more position locking cylinders. Lock release may fail for one of the cylinders.

■ Use the speed controller with meter-out.
If the meter-in control is used, the lock may not be able to be released.

■ At the side where the lock mechanism is attached, be sure to use the cylinder from the stroke end.
If the cylinder piston does not reach the stroke end, the lock may not be engaged or the lock may not be able to be released.

■ How to unlock
By screwing the hexagon socket head cap screw (M3 x 25) into the stopper piston and pulling the bolt 3 mm with force of 20 N or more, the stopper piston moves and the lock is released. (when horizontally installed with no load and with the rod port pressurized). When the screw is released, the internal spring returns the stopper piston. When the stopper piston fits in the piston rod groove, the cylinder is locked.

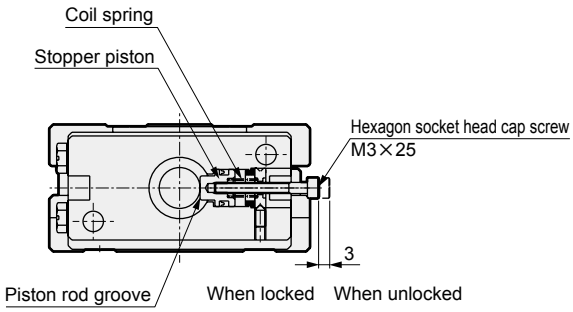

3. Long stroke length LCX-*L

■ The preload of the linear guide has been adjusted to an optimum value.
Do not loosen or tighten the hexagon socket set screw. Doing so may degrade the product performance.

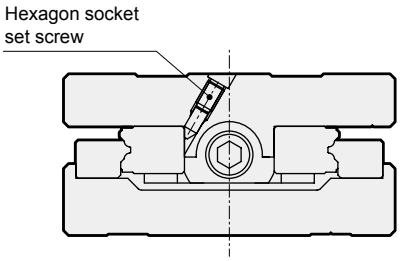

STM

Guided cylinder

ø6/ø10

Combined functions cylinder

Overview

This is a super compact guided cylinder that provides high freedom in mounting and abundant variations, with attention to ease of use and of selection.

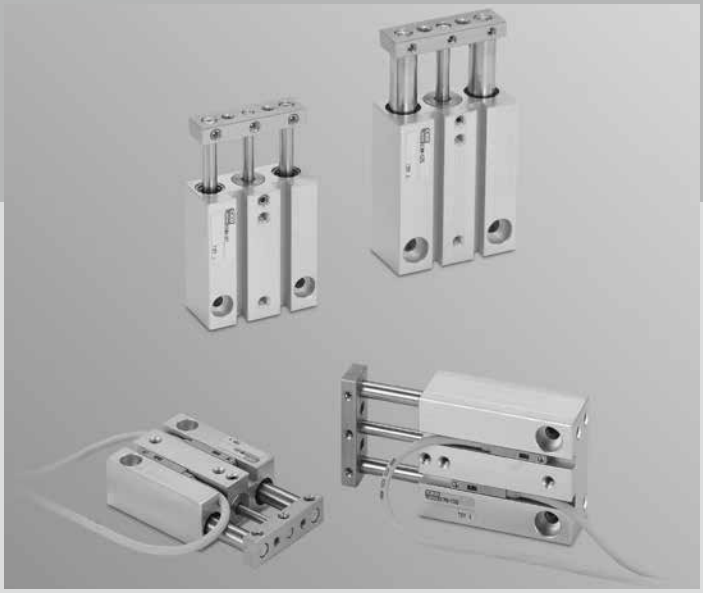

CONTENTS

Product introduction	310
Series variation	312
● Double acting/single rod (STM-M/B)	314
● Double acting/single rod/clean-room specifications (STM-B-P7*)	320
Selection guide	324
⚠ Safety precautions	326

Super compact handy cylinders

Super compact guided cylinder STM Series (ø6/ø10) with a high level of mounting flexibility and rich variations, promoting ease of use and selection.

Clean-room specifications with ball bearing is available.

High-performance guide

Rigid and lateral load resisting cylinder with excellent rod non-rotating accuracy of ±0.08*.

* Ball bearing (STM-B)

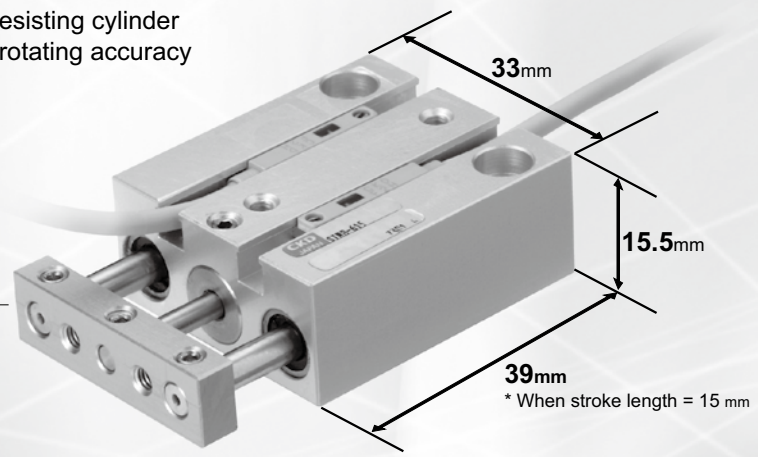

* When stroke length = 15 mm

Super compact size

The smallest model is 33 mm wide and 15.5 mm high
Super compact space saving in guided cylinders.

Guided cylinder

STM Series

suitable for various uses.

Piping direction

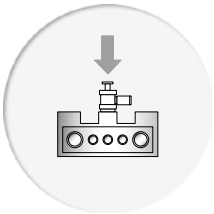

❶ Front piping

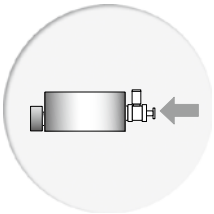

❷ Rear piping (option)

Supports rear piping and side mounting

In addition to the front side, common piping on the rear side is possible. (Option)
Side mounting of cylinder is supported. Multiple units can be installed even in small spaces. (Option)

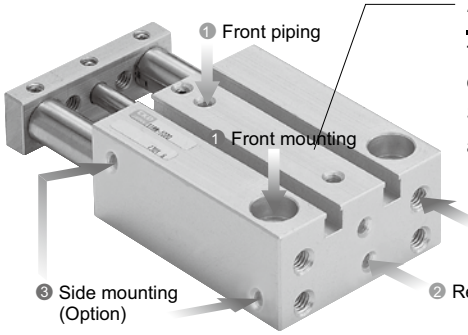

2-color display switch can be mounted.

The 2-color display proximity switch can be mounted on all models.
Select the switch lead wire direction from horizontal and vertical.

* The picture shows all options for explanation purposes.
Side and bottom mounting options are not available at the same time.
The same applies to piping options.

Mounting direction

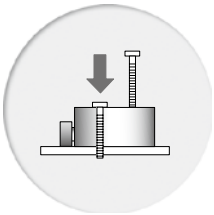

❶ Front mounting

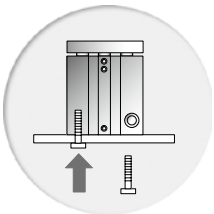

❷ Bottom mounting

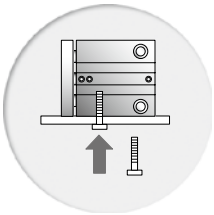

❸ Side mounting (option)

Two bearing options

Select metal bush bearing or ball bearing according to the application.

Suitable for clean rooms

Clean-room specifications (STM-B...P7) suitable for clean rooms are available.

Suitable for small parts conveyor

Suitable for conveyor for small parts including semiconductors and precision components where you can use the cylinders for positioning, clamping, press fitting, lifting, pushing and more.

Applications

Suitable for various manufacturing processes.

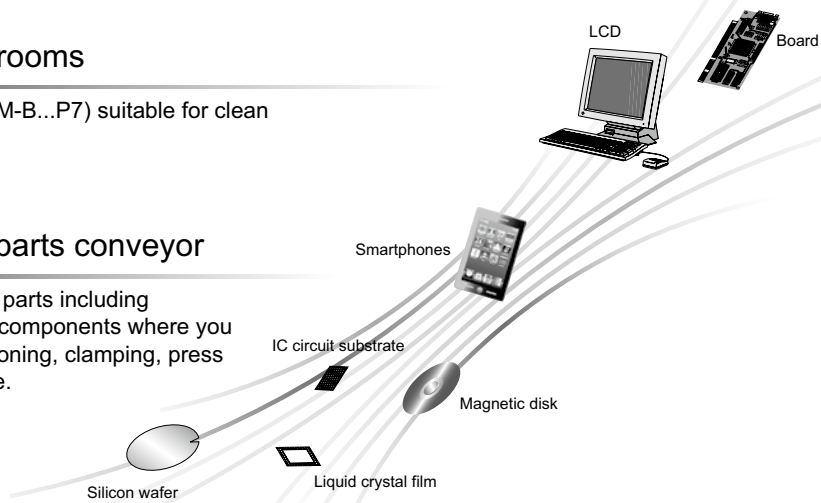

STM Series variation

Model variations	Bore size	Stroke length (mm) 5	10	15	20	Option Side mounting A	Rear piping R	Related products
Metal bush bearing STM-M Series	ø6	●	●	●		●	●	Detection switch (F type switch) 2-color display cylinder switch series
	ø10	●	●	●	●	●	●	
Ball bearing STM-B Series	ø6	●	●	●		●	●	Piping tube Fiber tube
	ø10	●	●	●	●	●	●	
Clean-room specifications STM-B-P7* Series	ø6	●	●	●		●		Dedicated fitting
	ø10	●	●	●	●	●		

* Ball bearing only

Variation	Model No. JIS symbol	Bore size (mm)	Stroke length (mm)				
			5	10	15	20	
Double acting/single rod	STM-M/B 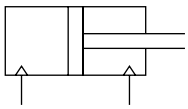	ø6	●	●	●		
		ø10	●	●	●	●	
Double acting/single rod clean-room specifications	STM-B-P7* 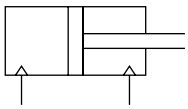	ø6	●	●	●		
		ø10	●	●	●	●	

LCM
LCR
LCG
LCW
LCX
STM
STG
STS/STL
STR2
UCA2
ULK*
JSK/M2
JSG
JSC3/JSC4
USSD
UFCD
USC
UB
JSB3
LMB
LML
HCM
HCA
LBC
CAC4
UCAC2
CAC-N
UCAC-N
RCS2
RCC2
PCC
SHC
MCP
GLC
MFC
BBS
RRC
GRC
RV3*
NHS
HRL
LN
Hand
Chuk
MecHnd/Chuk
ShkAbs
FJ
FK
SpdContr
Ending

● : Standard, ◎ : Option, : Not available

	Max. stroke length (mm)	Bearing		Option		Switch	Page
		Metal bush bearing M	Ball bearing B	Side mounting A	Rear piping R		
	15	●	●	●	●	◎	314
	20	●	●	●	●	◎	
	15		●	●		◎	320
	20		●	●		◎	

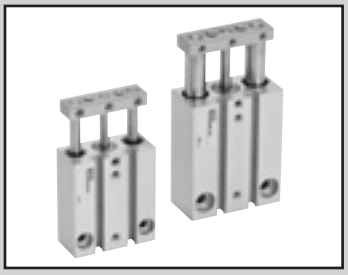

Guided cylinder, double acting/single rod

STM-M/B Series

● Bore size: ø6, ø10

JIS symbol

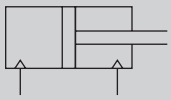

Specifications

Item	STM-M/B	
Bore size mm	ø6	ø10
Actuation	Double acting	
Working fluid	Compressed air	
Max. working pressure MPa	0.7 (≈100 psi, 7 bar)	
Min. working pressure MPa	0.15 (≈22 psi, 1.5 bar)	
Proof pressure MPa	1.05 (≈150 psi, 10.5 bar)	
Ambient temperature °C	-10 (14°F) to 60 (140°F) (no freezing)	
Port size	M3	
Stroke tolerance mm	+1.5 0	
Working piston speed mm/s	50 to 500	
Cushion	With rubber cushion	
Lubrication	Not required (use turbine oil class 1 ISO VG32 if necessary for lubrication)	
Allowable absorbed energy J	0.008	0.054

Stroke

Bore size	Standard stroke (mm)	Max. stroke (mm)	Min. stroke	Min. stroke with switch
ø6	5/10/15	15	5	5
ø10	5/10/15/20	20		

Note: Products other than standard stroke are made-to-order products.

LCM
LCR
LCG
LCW
LCX
STM
STG
STS/STL
STR2
UCA2
ULK*
JSK/M2
JSG
JSC3/JSC4
USSD
UFCD
USC
UB
JSB3
LMB
LML
HCM
HCA
LBC
CAC4
UCAC2
CAC-N
UCAC-N
RCS2
RCC2
PCC
SHC
MCP
GLC
MFC
BBS
RRC
GRC
RV3*
NHS
HRL
LN
Hand
Chuk
MecHnd/Chuk
ShkAbs
FJ
FK
SpdContr
Ending

Switch specifications

Item	Proximity 2-wire	Proximity 3-wire	Proximity 2-wire		Proximity 3-wire		
	F2S	F3S	F2H/F2V	F2YH/F2YV	F3H/F3V	F3PH/F3PV (Made to order)	F3YH/F3YV
Applications	Dedicated for programmable controller	For programmable controller, relay	Dedicated for programmable controller		For programmable controller, relay		
Output method	-	NPN output	-		NPN output	PNP output	NPN output
Power supply voltage	-	10 to 28 VDC	-		10 to 28 VDC	4.5 to 28 VDC	10 to 28 VDC
Load voltage	10 to 30 VDC	30 VDC or less	10 to 30 VDC	24 VDC ±10%	30 VDC or less		
Load current	5 to 20mA	50 mA or less	5 to 20 mA (*3)		100 mA or less	50 mA or less	
Indicator lamp	LED (Lit when ON)		Yellow LED (Lit when ON)	Red/green LED (Lit when ON)	Yellow LED (Lit when ON)		Red/green LED (Lit when ON)
Leakage current	1 mA or less	10 μA or less	1 mA or less		10 μA or less		
Weight g	1 m: 10 3 m: 29		1 m: 10 3 m: 29		1 m: 10 3 m: 29		

*1 : Refer to Ending Page 1 for detailed switch specifications and dimensions.
*2 : Switches other than the above models, such as switches with connectors, are also available. Refer to Ending Page 1.
*3 : The max. load current is 20 mA at 25°C. The current is lower than 20 mA if the operating ambient temperature around the switch is higher than 25˚C. (5 to 10 mA at 60°C)
*4 : The F-switch uses a bend-resistant lead wire.

Cylinder weight

Unit: g

Model No.	Stroke (mm) / Bore size (mm)	5	10	15	20	Switch weight
STM-M	ø6	45.1	52.5	59.9	-	Refer to the weight in the switch specifications.
	ø10	73.7	84.6	95.4	106.3	
STM-B	ø6	41.9	48.1	54.3	-	
	ø10	67.1	75.5	84.0	92.5	

Theoretical thrust table

Unit: N

Bore size (mm)	Operating direction	0.15	0.2	0.3	0.4	0.5	0.6	0.7
ø6	Push	4.24	5.65	8.48	11.3	14.1	17.0	19.8
	Pull	3.18	4.24	6.36	8.48	10.6	12.7	14.8
ø10	Push	11.8	15.7	23.6	31.4	39.3	47.1	55.0
	Pull	9.90	13.2	19.8	26.4	33.0	39.6	46.2

LCM
LCR
LCG
LCW
LCX
STM
STG
STS/STL
STR2
UCA2
ULK*
JSK/M2
JSG
JSC3/JSC4
USSD
UFCD
USC
UB
JSB3
LMB
LML
HCM
HCA
LBC
CAC4
UCAC2
CAC-N
UCAC-N
RCS2
RCC2
PCC
SHC
MCP
GLC
MFC
BBS
RRC
GRC
RV3*
NHS
HRL
LN
Hand
Chuk
MecHnd/Chuk
ShkAbs
FJ
FK
SpdContr
Ending

How to order

Without switch (built-in magnet for switch)

STM - M - 10 - 15 ———— A

With switch (built-in magnet for switch)

STM - M - 10 - 15 - F2V - D - A

Ⓐ Bearing

Ⓑ Bore size

Ⓒ Stroke

Ⓓ Switch model No. *1

Ⓔ Switch quantity

Ⓕ Option

Code	Description
Ⓐ Bearing	
M	Metal bush bearing
B	Ball bearing

Ⓑ Bore size (mm)	
6	ø6
10	ø10

Ⓒ Stroke (mm)		Bore size	
		6	**10**
5	5	●	●
10	10	●	●
15	15	●	●
20	20		●

Ⓓ Switch model No.

Straight lead wire	L-shaped lead wire	Contact	Voltage AC	Voltage DC	Indicator	Lead wire
-	F2S*	Proximity		●	1-color LED	2-wire
F2H*	F2V*			●		
-	F3S*			●		3-wire
F3H*	F3V*			●		
F3PH*	F3PV*			●	1-color LED (PNP output) (made to order)	3-wire
F2YH*	F2YV*			●	2-color LED	2-wire
F3YH*	F3YV*			●		3-wire

*** Lead wire length**	
Blank	1 m (standard)
3	3 m (option)

Ⓔ Switch quantity	
R	1 on rod side
H	1 on head side
D	2

Ⓕ Option	
A	Side mounting
R	Rear piping

⚠ Precautions for model No. selection

*1: When using a 2-color LED proximity switch for STM-B-6, avoid mounting the cylinder on a magnetic substance such as a metal plate. This could lead to switch detection malfunction.

[Example of model No.]

STM-M-10-15-F2H-D-A

Model: Guided cylinder

Ⓐ Bearing : Metal bush bearing
Ⓑ Bore size : ø10 mm
Ⓒ Stroke : 15 mm
Ⓓ Switch model No. : Proximity switch F2H, lead wire 1 m
Ⓔ Switch quantity : 2
Ⓕ Option : Side mounting

How to order switch

SW - F2V

Switch model No.
(Item Ⓓ above)

Internal structure and parts list

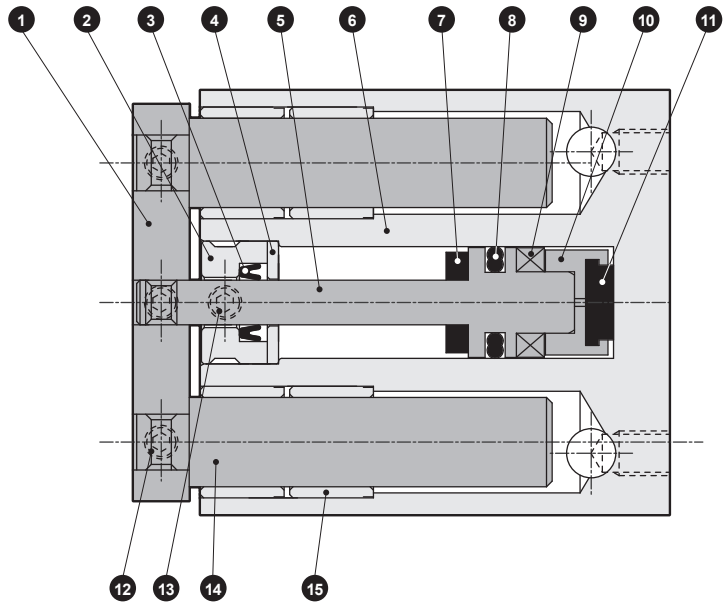

Metal bush bearing

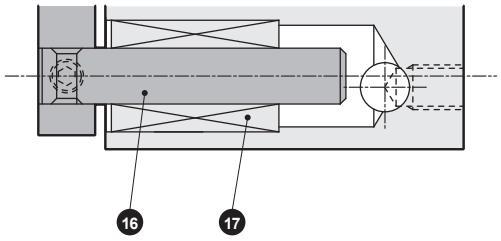

Ball bearing

Cannot be disassembled

* This product cannot be disassembled.

No.	Part name	Material	Remarks	No.	Part name	Material	Remarks
1	End plate	Aluminum alloy	Alumite	10	Adaptor	Aluminum alloy	Chromate
2	Rod metal	Stainless steel		11	Cushion rubber H	Urethane rubber	
3	Rod packing	Nitrile rubber		12	Hexagon socket set screw	Stainless steel	
4	Spacer	Aluminum alloy	Chromate	13	Hexagon socket set screw	Stainless steel	
5	Piston	Stainless steel		14	Guide rod	Stainless steel	Industrial chrome plating (ø10)
6	Cylinder body	Aluminum alloy	Hard alumite	15	Metal	Oil-impregnated copper alloy	
7	Cushion rubber R	Urethane rubber		16	Guide rod	Alloy steel	Industrial chrome plating
8	Piston packing	Nitrile rubber		17	Ball bearing		
9	Piston magnet						

LCM
LCR
LCG
LCW
LCX
STM
STG
STS/STL
STR2
UCA2
ULK*
JSK/M2
JSG
JSC3/JSC4
USSD
UFCD
USC
UB
JSB3
LMB
LML
HCM
HCA
LBC
CAC4
UCAC2
CAC-N
UCAC-N
RCS2
RCC2
PCC
SHC
MCP
GLC
MFC
BBS
RRC
GRC
RV3*
NHS
HRL
LN
Hand
Chuk
MecHnd/Chuk
ShkAbs
FJ
FK
SpdContr
Ending

Dimensions

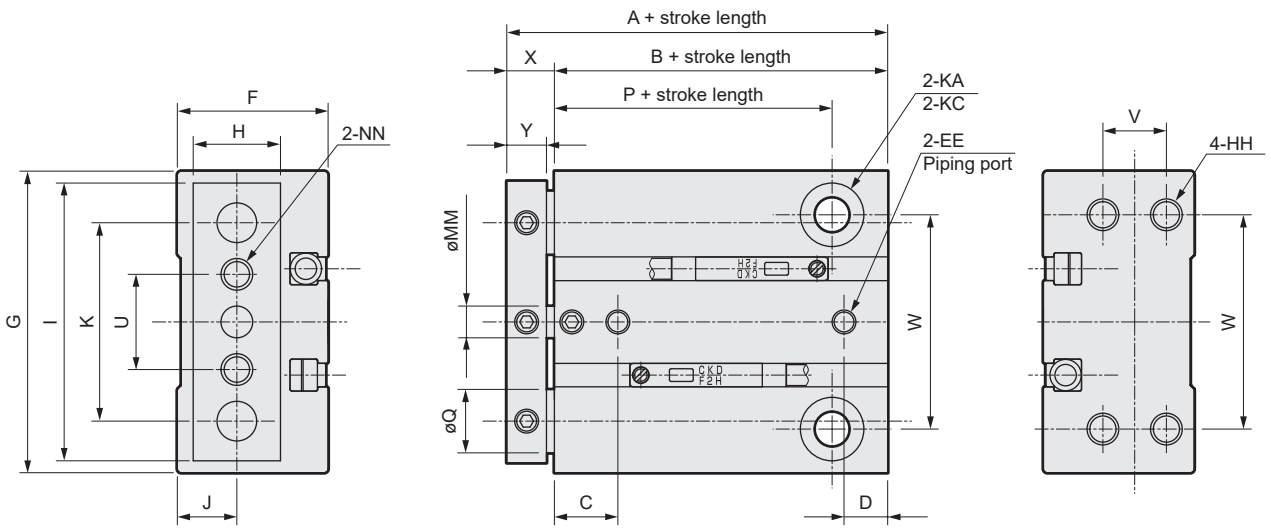

Code / Bore size (mm)	Standard stroke (mm)	A	B	C	D	EE	F	G	H	HH	I	J	K	KA
6	5/10/15	30	24	7.5	5	M3	15.5	33	9	M3 depth 5	31	6	23	3.4 through
10	5/10/15/20	34	28	8.5	7	M3	19	38	11	M4 depth 5	35	7.5	25	4.3 through

Code / Bore size (mm)	KC	MM	NN	P	Q		U	V	W	X	Y
					STM-M	STM-B					
6	6.1 spot face depth 3.3	3	M3 through	17	6	4	12	6	25	6	5
10	8 spot face depth 4.4	4	M4 through	20.5	8	5	12	8	27	6	5

Dimensions with options

● Side mounting (A)

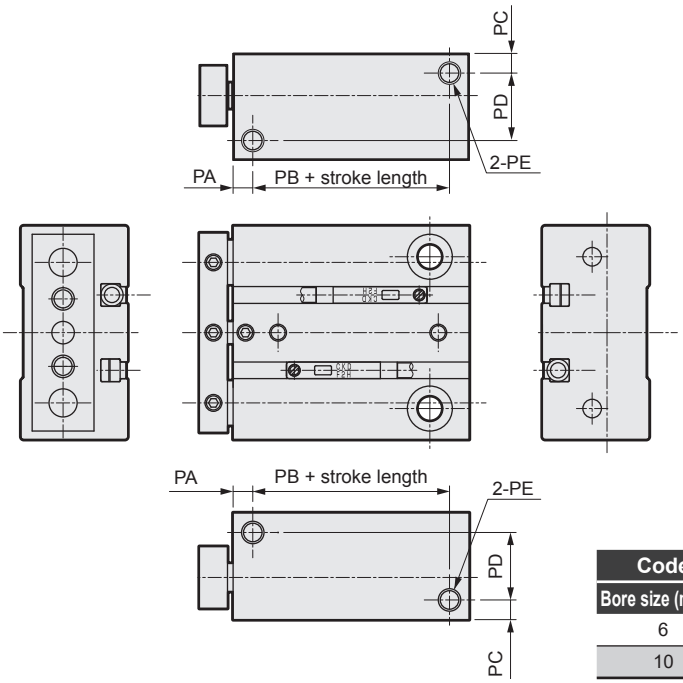

Code / Bore size (mm)	Standard stroke (mm)	PA	PB	PC	PD	PE
6	5/10/15	3	18	3	10	M3 depth 5
10	5/10/15/20	4	21	4	12	M4 depth 5

Dimensions with options

● Rear piping (R)

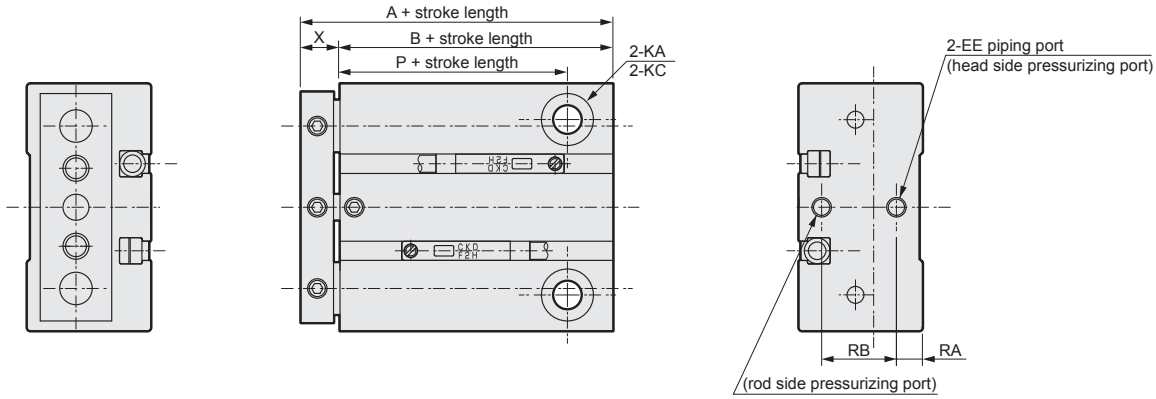

Code / Bore size (mm)	Standard stroke (mm)	A	B	EE	KA	KC	P	RA	RB
6	5, 10, 15	32	26	M3	3.4 through	6.1 spot face depth 3.3	17	4	8
10	5, 10, 15, 20	34	28	M3	4.3 through	8 spot face depth 4.4	20.5	4	12

Switch mounting position

	Lead wire direction		
	H	V	S
Mounting A	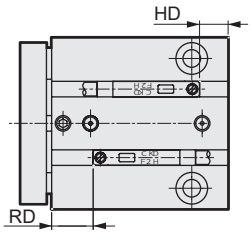	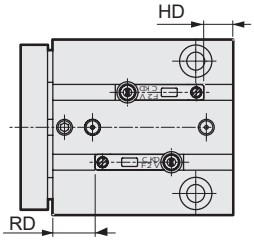	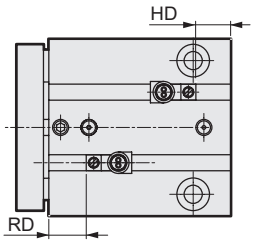
Mounting B *1	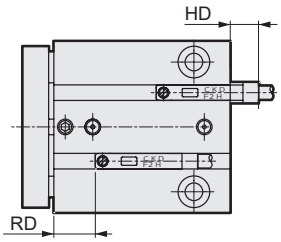	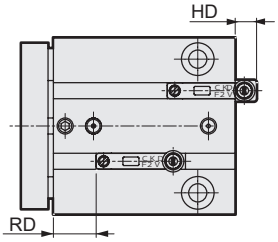	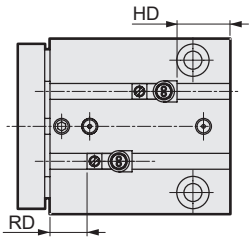

		F2H/V, F3H/V			F2YH/V, F3YH/V, F3PH/V			F2S, F3S	
		RD	HD(H)	HD(V)	RD	HD(H)	HD(V)	RD	HD
Mounting A	ø6	8	5.5(7.5)	5.5(7.5)	8	5.5(7.5)	5.5(7.5)	7	4.5
	ø10	10	7.5	7.5	10	7.5	7.5	9	6.5
Mounting B	ø6	8	-4.5(-6.5)	1.5(3.5)	8	-9(-11)	-6(-8)	7	8
	ø10	10	-3.5	0.5	10	8	-4	9	10

*1: When the switch is mounted as shown in mounting B type, it may project from the body.
If the switch projects from the body, it will interfere with the equipment if the product is installed on the equipment by head side mounting.
*2: Dimension in ( ) is the dimension for rear piping.
*3: For mounting dimensions in the table, the negative dimensions are the protruding dimensions toward the head side.

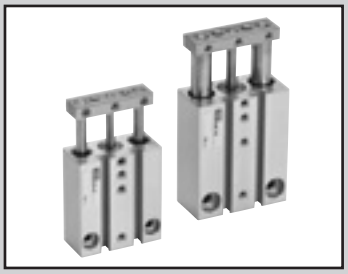

Guided cylinder, double acting/single rod/clean-room specifications

STM-B-P7* Series

● Bore size: ø6, ø10

JIS symbol

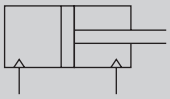

RoHS CAD

Specifications

Item	STM-B	
Bore size mm	ø6	ø10
Actuation	Double acting	
Working fluid	Compressed air	
Max. working pressure MPa	0.7 (≈100 psi, 7 bar)	
Min. working pressure MPa	0.2 (≈29 psi, 2 bar)	
Proof pressure MPa	1.05 (≈150 psi, 10.5 bar)	
Ambient temperature °C	-10 (14°F) to 60 (140°F) (no freezing)	
Port size	M3	
Port size (pressure relief port)	M3	
Stroke tolerance mm	+1.5 0	
Working piston speed mm/s	50 to 500	
Cushion	With rubber cushion	
Lubrication	Not available	
Allowable absorbed energy J	0.008	0.054

Stroke

Bore size	Standard stroke (mm)	Max. stroke (mm)	Min. stroke	Min. stroke with switch
ø6	5/10/15	15	5	5
ø10	5/10/15/20	20		

Note: Products other than standard stroke are made-to-order products.

Switch specifications

Item	Proximity 2-wire	Proximity 3-wire	Proximity 2-wire		Proximity 3-wire		
	F2S	F3S	F2H/F2V	F2YH/F2YV	F3H/F3V	F3PH/F3PV (Made to order)	F3YH/F3YV
Applications	Dedicated for programmable controller	For programmable controller, relay	Dedicated for programmable controller		For programmable controller, relay		
Output method	-	NPN output	-		NPN output	PNP output	NPN output
Power supply voltage	-	10 to 28 VDC	-		10 to 28 VDC	4.5 to 28 VDC	10 to 28 VDC
Load voltage	10 to 30 VDC	30 VDC or less	10 to 30 VDC	24 VDC ±10%	30 VDC or less		
Load current	5 to 20mA	50 mA or less	5 to 20 mA (*3)		100 mA or less	50 mA or less	
Indicator lamp	LED (Lit when ON)		Yellow LED (Lit when ON)	Red/green LED (Lit when ON)	Yellow LED (Lit when ON)		Red/green LED (Lit when ON)
Leakage current	1 mA or less	10 μA or less	1 mA or less		10 μA or less		
Weight g	1 m: 10 3 m: 29		1 m: 10 3 m: 29		1 m: 10 3 m: 29		

*1 : Refer to Ending Page 1 for detailed switch specifications and dimensions.
*2 : Switches other than the above models, such as switches with connectors, are also available. Refer to Ending Page 1.
*3 : The max. load current is 20 mA at 25°C. The current is lower than 20 mA if the operating ambient temperature around the switch is higher than 25˚C. (5 to 10 mA at 60°C)
*4 : The F-switch uses a bend-resistant lead wire.

Cylinder weight

Unit: g

Model No.	Stroke (mm) / Bore size (mm)	5	10	15	20	Switch weight
STM-B	ø6	56.2	62.5	68.7	-	Refer to the weight in the switch specifications.
	ø10	87.9	96.4	104.8	113.3	

Theoretical thrust table

Unit: N

Bore size (mm)	Operating direction	0.2	0.3	0.4	0.5	0.6	0.7
ø6	Push	5.65	8.48	11.3	14.1	17.0	19.8
	Pull	4.24	6.36	8.48	10.6	12.7	14.8
ø10	Push	15.7	23.6	31.4	39.3	47.1	55.0
	Pull	13.2	19.8	26.4	33.0	39.6	46.2

How to order

Without switch (built-in magnet for switch)

STM - B - 10 - 15 ———— A - P72

With switch (built-in magnet for switch)

STM - B - 10 - 15 - F2V - D - A - P72

Ⓐ Bearing

Ⓑ Bore size

Ⓒ Stroke

Ⓓ Switch model No. *1

Ⓔ Switch quantity

Ⓕ Option

Ⓖ Clean-room specifications

Code	Description
Ⓐ Bearing	
B	Ball bearing

Ⓑ Bore size (mm)	
6	ø6
10	ø10

Ⓒ Stroke (mm)

		Bore size	
		6	**10**
5	5	●	●
10	10	●	●
15	15	●	●
20	20		●

Ⓓ Switch model No.

Straight lead wire	L-shaped lead wire	Contact	Voltage AC	Voltage DC	Indicator	Lead wire
-	**F2S***	Proximity		●	1-color LED	2-wire
F2H*	**F2V***			●		
-	**F3S***			●		3-wire
F3H*	**F3V***			●		
F3PH*	**F3PV***			●	1-color LED (PNP output) (made to order)	3-wire
F2YH*	**F2YV***			●	2-color LED	2-wire
F3YH*	**F3YV***			●		3-wire

*** Lead wire length**	
Blank	1 m (standard)
3	3 m (option)

Ⓔ Switch quantity	
R	1 on rod side
H	1 on head side
D	2

Ⓕ Option	
A	Side mounting

Ⓖ Clean-room specifications

	Structure
P72	Exhaust port
P73	Vacuum treatment

⚠ Precautions for model No. selection

*1: When using a 2-color LED proximity switch for STM-B-6-P72/P73, avoid mounting the cylinder on a magnetic substance such as a metal plate. This could lead to switch detection malfunction.

[Example of model No.]

STM-B-10-15-F2H-D-A-P72

Model: Guided cylinder

Ⓐ Bearing : Ball bearing
Ⓑ Bore size : ø10 mm
Ⓒ Stroke : 15 mm
Ⓓ Switch model No. : Proximity switch F2H, lead wire 1 m
Ⓔ Switch quantity : 2
Ⓕ Option : Side mounting
Ⓖ Clean-room specifications : Exhaust port

How to order switch

SW - F2V

Switch model No.
(Item Ⓓ above)

Dimensions

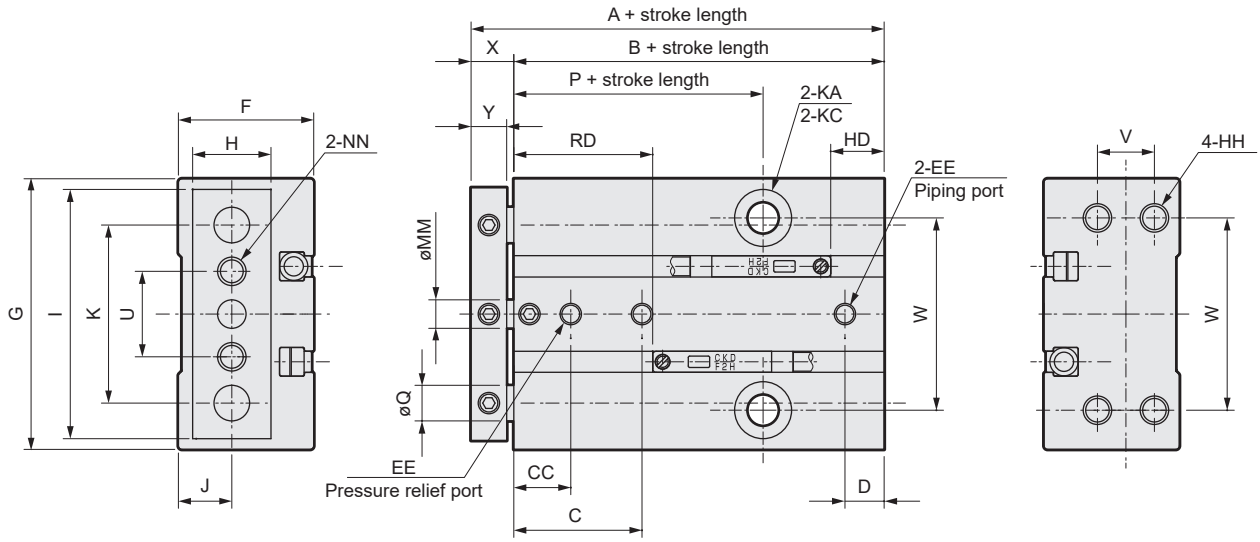

Code / Bore size (mm)	Standard stroke (mm)	A	B	C	CC	D	EE	F	G	H	HH	I	J	K	KA
6	5/10/15	40	34	17.5	7.5	5	M3	15.5	33	9	M3 depth 5	31	6	23	3.4 through
10	5/10/15/20	44	38	18.5	8.5	7	M3	19	38	11	M4 depth 5	35	7.5	25	4.3 through

Code / Bore size (mm)	KC	MM	NN	P	Q	U	V	W	X	Y	RD	HD
6	6.1 spot face depth 3.3	3	M3 through	17	4	12	6	25	6	5	18	5.5
10	8 spot face depth 4.4	4	M4 through	20.5	5	12	8	27	6	5	20	7.5

LCM
LCR
LCG
LCW
LCX
STM
STG
STS/STL
STR2
UCA2
ULK*
JSK/M2
JSG
JSC3/JSC4
USSD
UFCD
USC
UB
JSB3
LMB
LML
HCM
HCA
LBC
CAC4
UCAC2
CAC-N
UCAC-N
RCS2
RCC2
PCC
SHC
MCP
GLC
MFC
BBS
RRC
GRC
RV3*
NHS
HRL
LN
Hand
Chuk
MecHnd/Chuk
ShkAbs
FJ
FK
SpdContr
Ending

Selection guide

Allowable lateral load

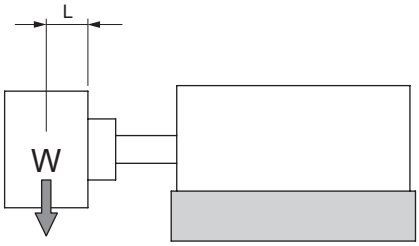

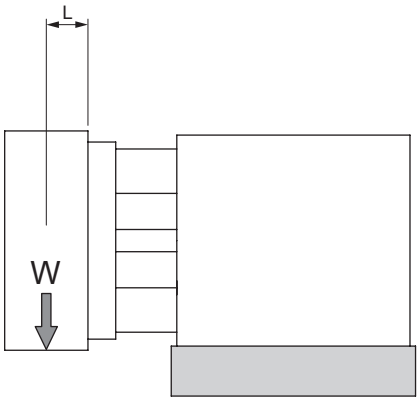

● STM-M-6

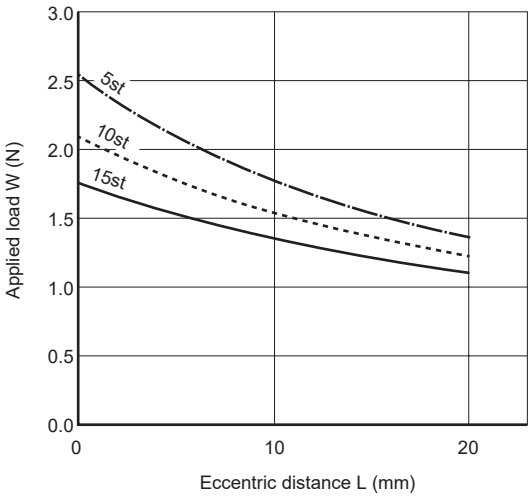

● STM-B-6

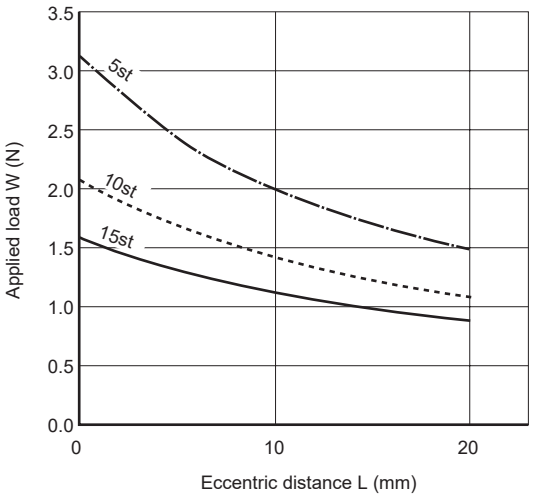

● STM-M-10

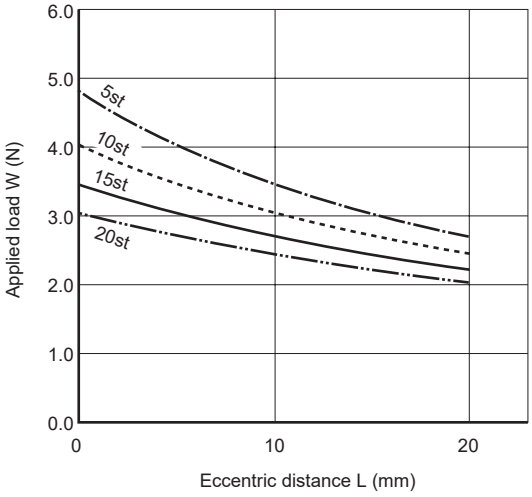

● STM-B-10

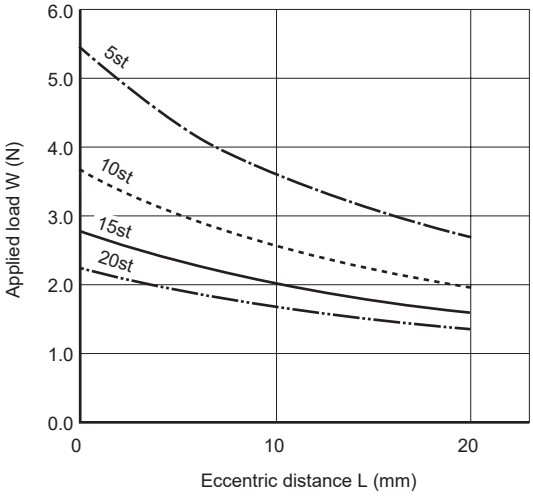

LCM
LCR
LCG
LCW
LCX
STM
STG
STS/STL
STR2
UCA2
ULK*
JSK/M2
JSG
JSC3/JSC4
USSD
UFCD
USC
UB
JSB3
LMB
LML
HCM
HCA
LBC
CAC4
UCAC2
CAC-N
UCAC-N
RCS2
RCC2
PCC
SHC
MCP
GLC
MFC
BBS
RRC
GRC
RV3*
NHS
HRL
LN
Hand
Chuk
MecHnd/Chuk
ShkAbs
FJ
FK
SpdContr
Ending

Allowable torque

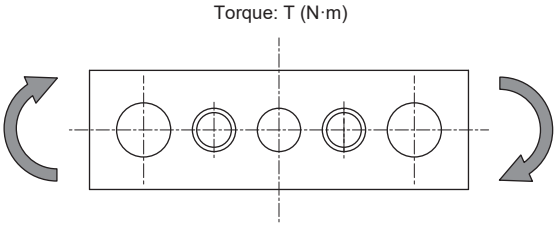

Unit: N·m

Bore size (mm)	Model No.	Bearing	Stroke length (mm)			
			5	10	15	20
ø6	STM-M-6	Metal bush bearing	0.015	0.012	0.010	-
	STM-B-6	Ball bearing	0.018	0.012	0.009	-
ø10	STM-M-10	Metal bush bearing	0.030	0.025	0.022	0.019
	STM-B-10	Ball bearing	0.034	0.023	0.018	0.014

Non-rotating accuracy (reference value)

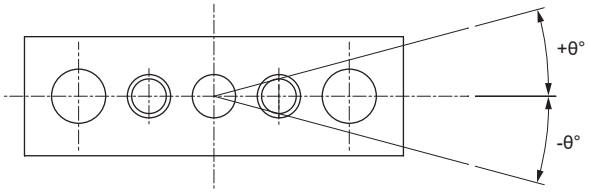

Bore size (mm)	Non-rotating accuracy θ (degree)	
	Metal bush bearing	Ball bearing
ø6	±0.14	±0.08
ø10	±0.16	±0.08

Allowable absorbed energy value

Use in the range below and to the left of the curve. For use in the upper right range, provide an external shock absorber.

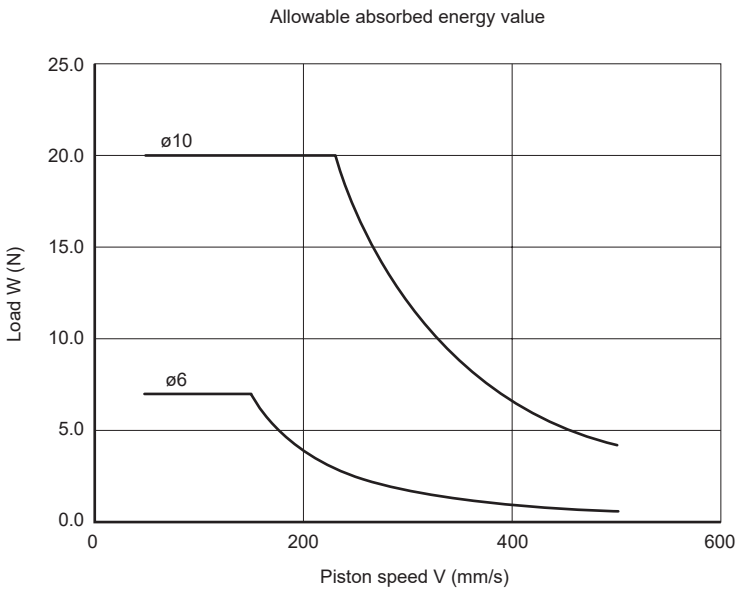

Pneumatic components

Safety Precautions

Be sure to read this section before use.
Refer to Intro Page 73 for general information of the cylinder, and to Intro Page 80 for general information of the cylinder switch.

Product-specific cautions: Guided cylinder STM Series

Design/selection

1. Common

CAUTION

■ When using a 2-color display proximity switch for STM-B-6, avoid mounting the cylinder on a magnetic substance such as a metal plate. This could lead to switch detection malfunction.

2. With switch

CAUTION

■ Observe tightening torque when mounting the switch.
If the tightening torque range is exceeded, the mounting bolt, bracket, switch, etc., could be damaged. In addition, when tightening the set screw with a torque less than the tightening torque range, displacement of switch mounting position could occur.
Tightening torque: 0.03 to 0.08 (N·m)

Mounting, installation and adjustment

1. Common

CAUTION

■ Be sure to attach a speed controller during piping before use. In addition, when mounting the rear piping with through bolt, the applicable fittings are as follows.

Bore size	Port size	Applicable fitting/ speed controller	Fitting O.D. D
ø6 ø10	M3	SC3W-M3-* SC3U-M3-*	ø8
		FTS4-M3 FTL4-M3	
		GWS *-M3-S	
		PTN2-M3 PTNL-M3	

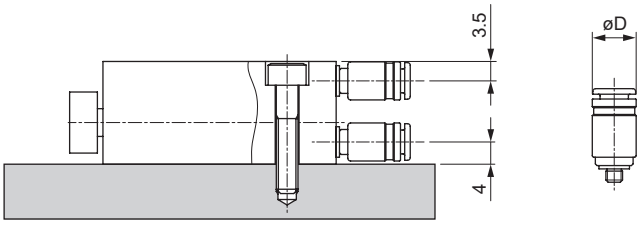

■ Do not damage surface flatness by denting or scratching the tube main body mounting surface or the end plate surface in order to increase sliding resistance. Make sure that the flatness of the mating surface where the end plate will be attached is 0.02 mm or below. If it is difficult to ensure the above flatness, insert a shim (customer-provided) between the end plate and workpiece and adjust the clearance. This may prevent an increase in sliding resistance.

■ When attaching a jig, etc., to the end plate, make sure that the bolt insertion length is equivalent to the Y dimension. Not doing so could cause malfunction or damage of the end plate.

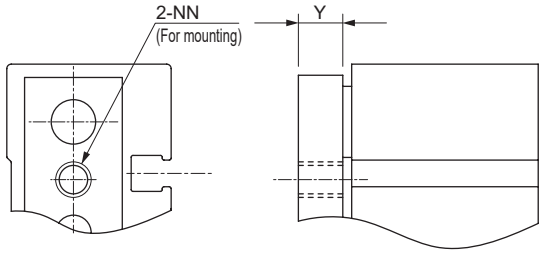

Bore size (mm)	Y dimension
ø6	5
ø10	

Mounting, installation and adjustment

■ Rubber cushion is integrated as a cushion mechanism. The table below shows the kinetic energy which can be absorbed by the rubber cushion. If the energy exceeds these values, consider using a separate shock absorber.

Bore size (mm)	Allowable absorbed energy (J)
ø6	0.008
ø10	0.054

■ When mounting the body with bolts, tighten with tightening torque as shown in the table below.

Bore size (mm)	Thread size	Tightening torque (N·m)		
		Through bolt	Bottom mount	Head side mount
ø6	M3	1.1	0.6	
ø10	M4	2.7	1.6	

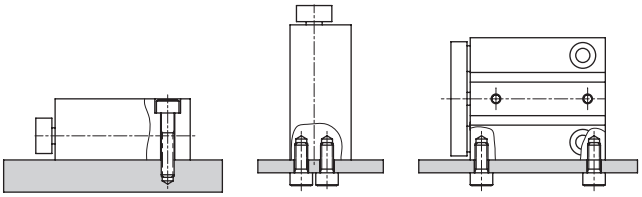

Through bolt　　Head side mount　　Side mounting

■ When mounting the workpiece on the end plate, tighten with tightening torque as shown in the table below.

Bore size (mm)	Thread size	Tightening torque (N·m)
ø6	M3	0.6
ø10	M4	1.6

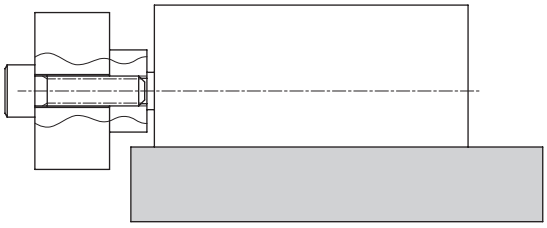

2. With switch

■ The cylinder switch may malfunction if there is a magnetic substance such as a metal plate installed adjacently. Check that a distance of 20 mm is provided from the surface of the cylinders. (Same clearance for all bore sizes)

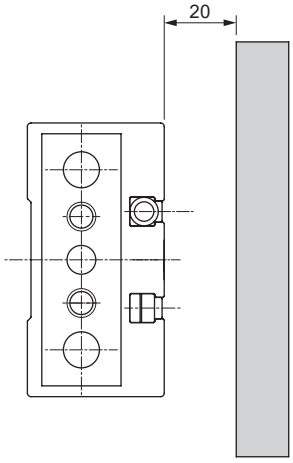

■ The cylinder switch may malfunction if cylinders are installed adjacently. Check that the following distances are provided between cylinders. (Same clearance for all bore sizes)

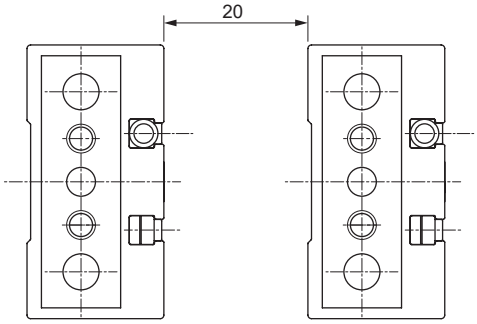

3. Clean-room specifications

■ Open the package in a cleanroom.

● This product is packed in a cleanroom. The package should be opened just before piping in the cleanroom.

LCM
LCR
LCG
LCW
LCX
STM
STG
STS/STL
STR2
UCA2
ULK*
JSK/M2
JSG
JSC3/JSC4
USSD
UFCD
USC
UB
JSB3
LMB
LML
HCM
HCA
LBC
CAC4
UCAC2
CAC-N
UCAC-N
RCS2
RCC2
PCC
SHC
MCP
GLC
MFC
BBS
RRC
GRC
RV3*
NHS
HRL
LN
Hand
Chuk
MecHnd/Chuk
ShkAbs
FJ
FK
SpdContr
Ending

Use/maintenance

1. Common

⚠ CAUTION

- This cylinder is a non-disassembly. Do not disassemble forcibly.

2. Clean-room specifications

⚠ WARNING

- Fluorine grease is used for P7 Series. Smoking with hands smeared with fluorine grease could generate harmful gases and cause physical harm.

STG/STG-K

Guided cylinder

Combined functions cylinder

ø12/ø16/ø20/ø25/ø32/ø40
ø50/ø63/ø80/ø100

Overview

Lighter in weight and more effectively saves resources than conventional products. In addition, the guide rod bearing section is improved and the metal bearing material and bearing structure are modified. This improves the lateral load proof characteristics compared to conventional products, realizing stable operation.

Features

Improved maintenance performance

An Allen wrench is used for piston rod mounting. Special tools are not required. Maintenance performance such as packing replacement is improved.

Supports a wide range of applications and environments.

Various options are provided to support a wide range of applications and environments. As well as the CKD original rubber-air cushion integrated, the rubber scraper and anti-spatter adherence are available. Types that can be used in clean rooms are also available.

CONTENTS

Product introduction	330
Series variation	332
Variation and option combination selection table	334
● Double acting/single rod (STG-$^{M}_{B}$)	336
● Double acting/rubber-air cushion (STG-$^{M}_{B}$-*C)	350
● Double acting/rubber-air cushion (STG-$^{M}_{B}$-C)	358
● Double acting/position locking (STG-$^{M}_{B}$Q)	368
● Double acting/rubber scraper (STG-$^{M}_{B}$G)	376
● Double acting/coil scraper (STG-$^{M}_{B}$G1)	376
● Double acting/coolant proof (STG-MG2, MG3)	382
● Double acting/anti-spatter adherence (STG-$^{M}_{B}$G4)	388
● Double acting/environment-resistant scraper (STG-MG5)	394
● Double acting/single rod clean-room specifications (STG-B-P7*)	404
STG Series switch common installation dimensions	410
Selection guide	412
⚠ Safety precautions	426
● Double acting/heavy duty guide rod (STG-K)	430

The cylinder switches T2YH, T2YV, T3YH, and T3YV are scheduled for end of production at the end of December 2023.

Global environment-friendly,

Hazardous substances are eliminated, emphasizing environmental protection and pollution prevention.
Load proof characteristics improved
Guided cylinder STG Series(ø12 to ø100)

Standard tools can be used for maintenance.

An Allen wrench is used for piston rod mounting. Special tools are not required for maintenance.

Supports high load

The guide rod bearing section is improved and the metal bearing material and bearing structure are modified.
Resistant to lateral and eccentric loads, it has improved load proof characteristics compared to conventional products.
Operation is now stabler than ever.

Lighter weight Resource saving

Aluminum cylinder body shape has been revised and optimized. Lighter in weight and more effectively saves resources than conventional products.

High precision/high rigidity.

STG-M/B Series

new type guided cylinder.

2 directions for piping, 3 types of mounting

● Piping direction

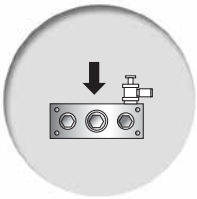

❶Front piping

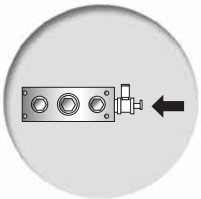

❷Side piping

● Mounting direction

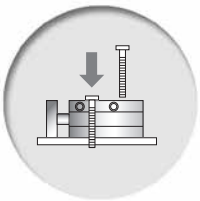

①Front mounting

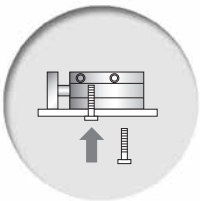

②Side mounting

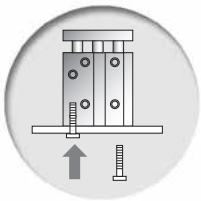

③Bottom mounting

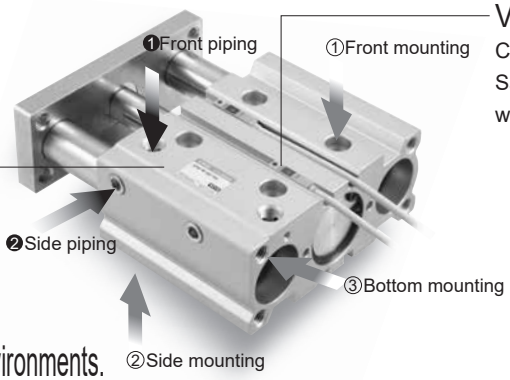

Various switches are mountable

Compact T type switch is mounted.
Saves space by eliminating protrusions when mounted.

Unified white system

The white system surface of the product matches various devices.

Supports a wide range of applications and environments.

The lineup contains a wide range of new models intended to respond to various applications and environments. Series now offering far more! Operation is now stabler than ever.

■ STG series variation

● Standard ○ Option ● Made to order

Model variations		Bearing (Metal bush M / Ball B)	Bore size (ø) 12	16	20	25	32	40	50	63	80	100	Clean-room specifications P7 *1	Max. stroke MAX	Switch SW	Copper and PTFE free specifications P6 *2
Single rod	STG-M/B	M, B	●	●	●	●	●	●	●	●	●	●	●	400	○	○ *3
Rubber-air cushioned	STG-M/B-□C	M, B	●	●			●	●	●	●				400	○	●
Air cushioned	STG-M/BC	M, B	●	●	●	●	●	●	●	●				400	○	●
Position locking	STG-M/BQ	M, B	●	●	●	●	●	●	●	●				400	○	
Rubber scraper	STG-M/BG	M, B	●	●	●	●	●	●	●	●				400	○	
Coil scraper	STG-M/BG1	M, B	●	●	●	●	●	●	●	●				400	○	
Coolant proof	STG-MG2,MG3	M	●		●	●	●	●	●	●				400	○	
Anti-spatter adherence	STG-M/BG4	M, B	●	●				●	●	●				400	○	
Environment-resistant scraper	STG-MG5	M			●	●	●	●	●	●	●	●		400	○	
Single rod clean-room specifications	STG-B-P7	B	●	●	●	●	●	●	●	●				400	○	

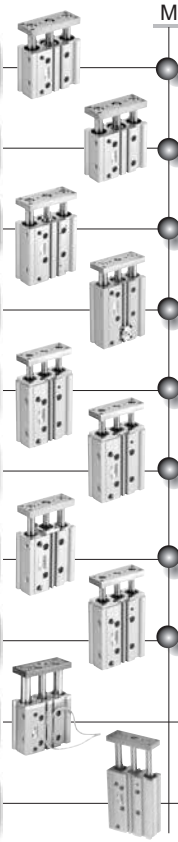

*1: For clean-room specifications, only ø12 to ø63 ball bearings “B type” are available.
*2: For ø12 to ø32 ball bearing “B type”, copper and PTFE free is available as standard.
*3: ø80 to ø100 is available as made to order.

Variation	Model No. JIS symbol	Bore size (mm)	Standard stroke (mm)								
			10	20	25	30	40	50	75	100	
Double acting/ single rod	STG-$^{M}_{B}$	ø12/ø16	●	●		●	●	●	●	●	
		ø20/ø25		●		●	●	●	●	●	
		ø32/ø40/ø50/ø63			●			●	●	●	
		ø80/ø100			●			●	●	●	
Double acting/ rubber-air cushioned	STG-$^{M}_{B}$-*C	ø32/ø40/ø50			●			●	●	●	
		ø63									
Double acting/ air cushioned	STG-$^{M}_{B}$C	ø16			●			●	●	●	
		ø20/ø25			●			●	●	●	
		ø32/ø40/ø50/ø63			●			●	●	●	
Double acting/ position locking	STG-$^{M}_{B}$Q 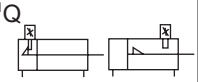	ø20/ø25 ø32/ø40/ø50/ø63			●			●	●	●	
Double acting/rubber scraper/coil scraper	STG-$^{M}_{B}$G STG-$^{M}_{B}$G1	ø20/ø25		●		●	●	●	●	●	
		ø32/ø40/ø50/ø63			●			●	●	●	
Double acting/ coolant proof	STG-MG2 STG-MG3	ø20/ø25		●		●	●	●	●	●	
		ø32/ø40/ø50/ø63			●			●	●	●	
Double acting/ anti-spatter adherence	STG-$^{M}_{B}$G4	ø40/ø50/ø63			●			●	●	●	
Double acting/ environment-proof scraper	STG-MG5	ø20/ø25		○		○	○	○	○	○	
		ø32/ø40/ø50/ø63/ø80/ø100			○			○	○	○	
Double acting single rod clean-room specifications	STG-P7	ø12/ø16	●	●		●	●	●	●	●	
		ø20/ø25		●		●	●	●	●	●	
		ø32/ø40/ø50/ø63			●			●	●	●	

LCM
LCR
LCG
LCW
LCX
STM
STG
STS/STL
STR2
UCA2
ULK*
JSK/M2
JSG
JSC3/JSC4
USSD
UFCD
USC
UB
JSB3
LMB
LML
HCM
HCA
LBC
CAC4
UCAC2
CAC-N
UCAC-N
RCS2
RCC2
PCC
SHC
MCP
GLC
MFC
BBS
RRC
GRC
RV3*
NHS
HRL
LN
Hand
Chuk
MecHnd/Chuk
ShkAbs
FJ
FK
SpdContr
Ending

●: Standard, ◎: Option, ○: Made to order, ■: Not available

Standard stroke (mm)								Min. stroke (mm)	Max. stroke (mm)	Custom stroke (per mm)	Bearing		Option	Switch	Page
											Metal bush bearing	Ball bearing	Copper and PTFE free specifications		
125	150	175	200	250	300	350	400	*2		*3	M	B	P6 *1		
●	●	●	●	●				5(10)	250	5	●	●	◎	◎	336
●	●	●	●	●	●	●	●		400		●	●	◎		
●	●	●	●	●	●	●	●		400		●	●	◎		
●	●	●	●	●	●	●	●		400		●	●	○		
●	●	●	●	●	●	●	●	5(10) 10	400	5	●	●	○	◎	350
●	●	●	●	●				15 *4	250	1 (Made to order)	●	●	○	◎	358
●	●	●	●	●	●	●	●		400		●	●	○		
●	●	●	●	●	●	●	●		400		●	●	○		
●	●	●	●	●	●	●	●	5(15) *5	400	5	●	●		◎	368
●	●	●	●	●	●	●	●	5(10)	400	5	●	●		◎	376
●	●	●	●	●	●	●	●		400		●	●			
●	●	●	●	●	●	●	●	5(10)	400	5	●			◎	382
●	●	●	●	●	●	●	●		400		●				
●	●	●	●	●	●	●	●	5(10)	400	5	●	●		◎	388
○	○	○	○	○	○	○	○	5(10)	400	5	○			○	394
○	○	○	○	○	○	○	○								
●	●	●	●	●				5(10)	250	5		●		◎	404
●	●	●	●	●	●	●	●		400			●			
●	●	●	●	●	●	●	●		400			●			

*1: For ø12 to ø32 ball bearing "B" type, copper and PTFE free is available as standard.
*2: The value in ( ) for min. stroke is for switches of the 2-color LED, off-delay, strong magnetic field proof, preventive maintenance output.
*3: Custom stroke is handled by attaching a spacer to the standard stroke cylinder. For a dedicated body, contact CKD separately.
*4: For types with air cushion at min. stroke and below, select the basic since there is no cushion effect.
*5: The values are for radial lead wire.
The value for lead wire straight will be 20 (30).

LCM
LCR
LCG
LCW
LCX
STM
STG
STS/STL
STR2
UCA2
ULK*
JSK/M2
JSG
JSC3/JSC4
USSD
UFCD
USC
UB
JSB3
LMB
LML
HCM
HCA
LBC
CAC4
UCAC2
CAC-N
UCAC-N
RCS2
RCC2
PCC
SHC
MCP
GLC
MFC
BBS
RRC
GRC
RV3*
NHS
HRL
LN
Hand
Chuk
MecHnd/Chuk
ShkAbs
FJ
FK
SpdContr
Ending

Variation and option selection table (metal bush bearing)

● : Standard
◎ : Option
○ : Available (made-to-order product)
△ : Available depending on conditions (Contact CKD.)
× : Not available

Category		Code	Double acting basic M	Position locking Q	With air cushion C	Heat resistance (120°C) T	Packing material fluoro rubber T2	Low speed O	Rubber scraper G	Coil scraper G1	Coolant proof scraper (NBR) G2	Coolant proof scraper (FKM) G3	Anti-spatter adherence G4	Environment-resistant scraper G5	Port thread: NPT ø20 or more NN	Port thread: G ø20 or more GN	Cushion: Rubber-air cushioned C	Option: Corrosion proof *5 M	Option: Copper and PTFE free P6	Option: Clean-room specifications (exhaust port) *6 P72	Option: Clean-room specifications (vacuum treatment) *6 P73
Variation	Double acting basic	M		●	●	○	○	○	●	●	●	●	●	○	○	○	●	△	◎	×	×
Variation	Position locking	Q			*2	×	×	×	△	△	△	△	△	△	○	○	*2	△	○	×	×
Variation	With air cushion	C				*1	*1	○	○	○	○	○	○	*7	○	○	×	△	○	×	×
Variation	Heat resistance (120°)	T						×	×	○	×	×	×	×	○	○	×	×	×	×	×
Variation	Packing material fluoro rubber	T2						×	×	○	×	*3	×	×	○	○	×	△	○	×	×
Variation	Low speed	O							×	×	×	×	×	×	○	○	○	△	×	×	×
Variation	Rubber scraper	G								×	×	×	×	×	○	○	○	△	○	×	×
Variation	Coil scraper	G1									×	×	*4	×	○	○	○	△	×	×	×
Variation	Coolant proof scraper (NBR)	G2										×	×	×	○	○	○	△	×	×	×
Variation	Coolant proof scraper (FKM)	G3											×	×	○	○	×	△	×	×	×
Variation	Anti-spatter adherence	G4												×	○	○	○	△	×	×	×
Variation	Environment-resistant scraper	G5													○	○	○	△	×	×	
Port thread	NPT ø20 or more	NN														×	○	△	○	×	×
Port thread	G ø20 or more	GN															○	△	○	×	×
Cushion	Rubber-air cushioned	C																△	○	×	×
Option	Corrosion proof *5	M																	×	×	×
Option	Copper and PTFE free	P6																		×	×
Option	Clean-room specifications (exhaust port) *6	P72																			×
Option	Clean-room specifications (vacuum treatment) *6	P73																			

Caution
*1: Available for ø40 and over.
*2: Only the opposite side of the position locking is available. (Example) For head side position locking, the cushion can be attached to the rod side.
*3: For the combination of G3 and T2, select G3 for all-fluoro rubber packing. (T2 code is not required)
*4: For G4 type, the coil scraper is integrated.
*5: For M: corrosion-resistant, iron parts are mainly changed to stainless steel parts. However, the material of the bolt (part No. 6) that connects the end plate with the guide rod will remain iron for reasons of manufacturing.
*6: Because the metal bush bearing generates abrasive powder from the guide, clean-room specifications are not available.
*7: Available for ø25 and over.

[Example of model No.]

STG - M C G - 50 NN - 50 - T0H - D - P6

- STG: Model No.
- M C G: Variation (* Indicate codes from left to right in the left table.)
- 50: A Bore size
- NN: B Port thread
- 50: C Stroke
- T0H: D Switch model No.
- D: E Switch quantity
- P6: F Option (* Indicate codes from left to right in the left table.)

Model No. : Guided cylinder
● Variations : Metal bush bearing, with air cushion, rubber scraper
A Bore size : ø50 mm
B Port thread : NPT thread
C Stroke : 50 mm
D Switch model No. : Reed T0H switch, lead wire 1 m
E Switch quantity : 2
F Option : Copper and PTFE free

Variation and option combination selection table (ball bearing)

● : Standard
◎ : Option
○ : Available (made-to-order product)
△ : Available depending on conditions (Contact CKD.)
× : Not available

Category		Code	B	Q	C	T	T2	O	G	G1	G2	G3	G4	NN	GN	C	M	P6	P72	P73
		Category	Variation											Port thread		Cushion	Option			
			Double acting basic	Position locking	With air cushion	Heat resistance (120°C) *1	Packing material fluoro rubber *1	Low speed	Rubber scraper	Coil scraper	Coolant proof scraper (NBR)	Coolant proof scraper (FKM)	Anti-spatter adherence	NPT (ø20 or more)	G (ø20 or more)	Rubber-air cushioned	Corrosion proof *3	Copper and PTFE free	Clean-room specifications (exhaust port)	Clean-room specifications (vacuum treatment)
Variation	Double acting basic	B		●	●	×	×	○	●	●	×	×	●	○	○	●	×	◎	●	●
Variation	Position locking	Q			*2	×	×	×	△	△	×	×	△	○	○	*2	×	○	×	×
Variation	With air cushion	C				×	×	○	○	○	×	×	○	○	○	×	×	○	×	×
Variation	Heat resistance (120°) *1	T					×	×	×	×	×	×	×	×	×	×	×	×	×	×
Variation	Packing material fluoro rubber *1	T2						×	×	×	×	×	×	×	×	×	×	×	×	×
Variation	Low speed	O							×	×	×	×	×	○	○	○	×	×	○	○
Variation	Rubber scraper	G								×	×	×	×	○	○	○	×	○	×	×
Variation	Coil scraper	G1									×	×	*4	○	○	○	×	×	×	×
Variation	Coolant proof scraper (NBR)	G2										×	×	○	○	○	×	○	×	×
Variation	Coolant proof scraper (FKM)	G3											×	○	○	×	×	○	×	×
Variation	Anti-spatter adherence	G4												○	○	○	×	×	×	×
Port thread	NPT (ø20 or more)	NN													×	○	×	○	○	○
Port thread	G (ø20 or more)	GN														○	×	○	○	○
Cushion	Rubber-air cushioned	C															×	○	×	×
Option	Corrosion proof *3	M																×	×	×
Option	Copper and PTFE free	P6																	×	×
Option	Clean-room specifications (exhaust port)	P72																		×
Option	Clean-room specifications (vacuum treatment)	P73																		

Caution
*1: For heat resistance and fluoro rubber packing material ball bearing, bearings are not available.
*2: Only the opposite side of the position locking is available. (Example) For head side position locking, the cushion can be attached to the rod side.
*3: For corrosion-resistant ball bearing, the bearing is not available.
*4: For G4 type, the coil scraper is integrated.

[Example of model No.]

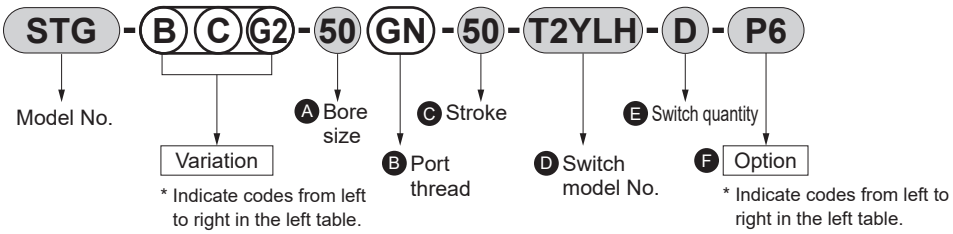

Model No.
● Variation : Ball bearing, with air cushion, coolant proof scraper (NBR)
Ⓐ Bore size : ø50 mm
Ⓑ Port thread : G thread
Ⓒ Stroke : 50 mm
Ⓓ Switch model No. : Proximity T2YLH switch, lead wire 1 m
Ⓔ Switch quantity : 2
Ⓕ Option : Copper and PTFE free

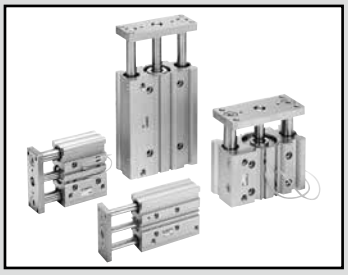

Guided cylinder, double acting/single rod

STG-$^{M}_{B}$ Series

● Bore size:ø12/ø16/ø20/ø25/ø32/ø40
ø50/ø63/ø80/ø100

JIS symbol

Specifications

Item	STG-M/B									
Bore size mm	ø12	ø16	ø20	ø25	ø32	ø40	ø50	ø63	ø80	ø100
Actuation	Double acting									
Working fluid	Compressed air									
Max. working pressure MPa	1.0 (≈150 psi, 10 bar)									
Min. working pressure MPa	0.15 (≈22 psi, 1.5 bar)				0.1 (≈15 psi, 1 bar)					
Proof pressure MPa	1.6 (≈230 psi, 16 bar)									
Ambient temperature °C	-10 (14°F) to 60 (140°F) (no freezing)									
Port size	M5		Rc1/8				Rc1/4		Rc3/8	
Stroke tolerance mm	+2.0 0									
Working piston speed mm/s	50 to 500							50 to 300		
Cushion	With rubber cushion									
Lubrication	Not required (use turbine oil class 1 ISO VG32 if necessary for lubrication)									
Allowable absorbed energy J	0.056	0.088	0.157	0.157	0.401	0.627	0.980	1.560	2.510	3.92

Stroke length

Bore size	Standard stroke length (mm)	Max. stroke length (mm)	Min. stroke length (mm)	Min. stroke (mm)(switch)
ø12	10/20/30/40/50/75/100/ 125/150/175/200/250	250	5	5(10) *2
ø16				
ø20	20/30/40/50/75/100/125/ 150/175/200/250/300/350/400	400		
ø25				
ø32	25/50/75/100 125/150/175 200/250/300 350/400			
ø40				
ø50				
ø63				
ø80				
ø100				

*1: The custom stroke length is available in 5 mm increments. However, the total dimensions are the same as the longer standard stroke length. A dedicated body with dimensions matched to the stroke length is available. Contact CKD for details.
*2: For types with one or two switches. The value in ( ) is the min. stroke length for switches of the 2-color display and AC magnetic field proof.

Theoretical thrust table

(Unit: N)

Bore size (mm)	Operating direction	Working pressure MPa										
		0.1	0.15	0.2	0.3	0.4	0.5	0.6	0.7	0.8	0.9	1.0
ø12	Push	-	17.0	22.6	33.9	45.2	56.5	67.9	79.2	90.5	1.02×10^{2}	1.13×10^{2}
	Pull	-	12.7	17.0	25.4	33.9	42.4	50.9	59.4	67.9	76.3	84.8
ø16	Push	-	30.2	40.2	60.3	80.4	1.01×10^{2}	1.21×10^{2}	1.41×10^{2}	1.61×10^{2}	1.81×10^{2}	2.01×10^{2}
	Pull	-	22.6	30.2	45.2	60.3	75.4	90.5	1.06×10^{2}	1.21×10^{2}	1.36×10^{2}	1.51×10^{2}
ø20	Push	-	47.1	62.8	94.2	1.26×10^{2}	1.57×10^{2}	1.88×10^{2}	2.20×10^{2}	2.51×10^{2}	2.83×10^{2}	3.14×10^{2}
	Pull	-	35.3	47.1	70.7	94.2	1.18×10^{2}	1.41×10^{2}	1.65×10^{2}	1.88×10^{2}	2.12×10^{2}	2.36×10^{2}
ø25	Push	-	73.6	98.2	1.47×10^{2}	1.96×10^{2}	2.45×10^{2}	2.95×10^{2}	3.44×10^{2}	3.93×10^{2}	4.42×10^{2}	4.91×10^{2}
	Pull	-	56.7	75.6	1.13×10^{2}	1.51×10^{2}	1.89×10^{2}	2.27×10^{2}	2.64×10^{2}	3.02×10^{2}	3.40×10^{2}	3.78×10^{2}
ø32	Push	80.4	1.21×10^{2}	1.61×10^{2}	2.41×10^{2}	3.22×10^{2}	4.02×10^{2}	4.83×10^{2}	5.63×10^{2}	6.43×10^{2}	7.24×10^{2}	8.04×10^{2}
	Pull	60.3	90.5	1.21×10^{2}	1.81×10^{2}	2.41×10^{2}	3.02×10^{2}	3.62×10^{2}	4.22×10^{2}	4.83×10^{2}	5.43×10^{2}	6.03×10^{2}
ø40	Push	1.26×10^{2}	1.88×10^{2}	2.51×10^{2}	3.77×10^{2}	5.03×10^{2}	6.28×10^{2}	7.54×10^{2}	8.80×10^{2}	1.01×10^{3}	1.13×10^{3}	1.26×10^{3}
	Pull	1.06×10^{2}	1.58×10^{2}	2.11×10^{2}	3.17×10^{2}	4.22×10^{2}	5.28×10^{2}	6.33×10^{2}	7.39×10^{2}	8.44×10^{2}	9.50×10^{2}	1.06×10^{3}
ø50	Push	1.96×10^{2}	2.95×10^{2}	3.93×10^{2}	5.89×10^{2}	7.85×10^{2}	9.82×10^{2}	1.18×10^{3}	1.37×10^{3}	1.57×10^{3}	1.77×10^{3}	1.96×10^{3}
	Pull	1.65×10^{2}	2.47×10^{2}	3.30×10^{2}	4.95×10^{2}	6.60×10^{2}	8.25×10^{2}	9.90×10^{2}	1.15×10^{3}	1.32×10^{3}	1.48×10^{3}	1.65×10^{3}
ø63	Push	3.12×10^{2}	4.68×10^{2}	6.23×10^{2}	9.35×10^{2}	1.25×10^{3}	1.56×10^{3}	1.87×10^{3}	2.18×10^{3}	2.49×10^{3}	2.81×10^{3}	3.12×10^{3}
	Pull	2.80×10^{2}	4.20×10^{2}	5.61×10^{2}	8.41×10^{2}	1.12×10^{3}	1.40×10^{3}	1.68×10^{3}	1.96×10^{3}	2.24×10^{3}	2.52×10^{3}	2.80×10^{3}
ø80	Push	5.03×10^{2}	7.54×10^{2}	1.01×10^{3}	1.51×10^{3}	2.01×10^{3}	2.51×10^{3}	3.02×10^{3}	3.52×10^{3}	4.02×10^{3}	4.52×10^{3}	5.03×10^{3}
	Pull	4.54×10^{2}	6.80×10^{2}	9.07×10^{2}	1.36×10^{3}	1.81×10^{3}	2.27×10^{3}	2.72×10^{3}	3.17×10^{3}	3.63×10^{3}	4.08×10^{3}	4.54×10^{3}
ø100	Push	7.85×10^{2}	1.18×10^{3}	1.57×10^{3}	2.36×10^{3}	3.14×10^{3}	3.93×10^{3}	4.71×10^{3}	5.50×10^{3}	6.28×10^{3}	7.07×10^{3}	7.85×10^{3}
	Pull	7.15×10^{2}	1.07×10^{3}	1.43×10^{3}	2.14×10^{3}	2.86×10^{3}	3.57×10^{3}	4.29×10^{3}	5.00×10^{3}	5.72×10^{3}	6.43×10^{3}	7.15×10^{3}

LCM
LCR
LCG
LCW
LCX
STM
STG
STS/STL
STR2
UCA2
ULK*
JSK/M2
JSG
JSC3/JSC4
USSD
UFCD
USC
UB
JSB3
LMB
LML
HCM
HCA
LBC
CAC4
UCAC2
CAC-N
UCAC-N
RCS2
RCC2
PCC
SHC
MCP
GLC
MFC
BBS
RRC
GRC
RV3*
NHS
HRL
LN
Hand
Chuk
MecHnd/Chuk
ShkAbs
FJ
FK
SpdContr
Ending

Switch specifications

● 1-color/2-color display/for AC magnetic field proof

Item	Proximity 2-wire	Proximity 2-wire			Proximity 3-wire				Reed 2-wire							Proximity 2-wire
	T1H/ T1V	T2H/T2V/ T2JH/T2JV	T2YH/ T2YV	T2WH/ T2WV	T3H/ T3V	T3PH/ T3PV	T3YH/ T3YV	T3WH/ T3WV	T0H/T0V		T5H/T5V		T8H/T8V			T2YD(*4) T2YDT
Applications	For programmable controller, relay, compact solenoid valve	Dedicated for programmable controller			For programmable controller, relay				For programmable controller, relay		For programmable controller, relay, IC circuit (no indicator lamp), serial connection		For programmable controller, relay			For programmable controller
Output method	-				NPN output	PNP output	NPN output	NPN output	-							
Pwr. supp. V.	-				10 to 28 VDC				-							
Load voltage	85 to 265 VAC	10 to 30 VDC		24 VDC ±10%	30 VDC or less				12/24 VDC	100/110 VAC	5/12/24 VDC	100/110 VAC	12/24 VDC	110 VAC	220 VAC	24 VDC ±10%
Load current	5 to 100 mA	5 to 20 mA (*3)			100 mA or less		50 mA or less		5 to 50 mA	7 to 20 mA	50 mA or less	≤20 mA	5 to 50 mA	7 to 20 mA	7 to 10 mA	5 to 20 mA
Indicator lamp	LED (Lit when ON)	LED (Lit when ON)	Red/green LED (Lit when ON)	Red/green LED (Lit when ON)	LED (Lit when ON)	Yellow LED (Lit when ON)	Red/green LED (Lit when ON)	Red/green LED (Lit when ON)	LED (Lit when ON)		Without indicator lamp		LED (Lit when ON)			Red/green LED (Lit when ON)
Leakage current	≤1 mA at 100 VAC, ≤2 mA at 200 VAC	1 mA or less			10 μA or less				0 mA							1 mA or less
Weight g	1 m:33 3 m:87 5 m:142	1 m:18 3 m:49 5 m:80	1 m:33 3 m:87 5 m:142	1 m:18 3 m:49 5 m:80	1 m:18 3 m:49 5 m:80		1 m:33 3 m:87 5 m:142	1 m:18 3 m:49 5 m:80	1 m:18 3 m:49 5 m:80				1 m:33 3 m:87 5 m:142			1 m:61 3 m:166 5 m:272

*1 : Refer to Ending Page 1 for detailed switch specifications and dimensions.
*2 : Switches other than the above models, such as switches with connectors, are also available. Refer to Ending Page 1.
*3 : The max. load current is 20 mA at 25°C. The current is lower than 20 mA if the operating ambient temperature around the switch is higher than 25°C. (5 to 10 mA at 60°C)
*4 : AC magnetic field proof switch (T2YD/T2YDT) cannot be used in DC magnetic fields.

Cylinder weight

● STG-M

Unit: kg

Item	Stroke length																Switch weight
Bore size (mm)	10	20	25	30	40	50	75	100	125	150	175	200	250	300	350	400	
ø12	0.23	0.27		0.30	0.34	0.38	0.49	0.57	0.68	0.77	0.86	0.95	1.13				Refer to the weight in the switch specifications.
ø16	0.32	0.37		0.42	0.47	0.51	0.66	0.78	0.94	1.06	1.18	1.31	1.55				
ø20		0.65		0.73	0.81	0.88	1.13	1.33	1.52	1.71	1.90	2.10	2.55	2.94	3.32	3.71	
ø25		0.92		1.02	1.13	1.23	1.60	1.86	2.12	2.40	2.66	2.92	3.56	4.08	4.62	5.14	
ø32			1.64			2.01	2.54	2.94	3.34	3.73	4.12	4.51	5.49	6.27	7.07	7.85	
ø40			1.89			2.30	2.75	3.15	3.57	3.98	4.39	4.80	5.81	6.64	7.47	8.29	
ø50			3.26			3.88	4.59	5.21	5.83	6.45	7.07	7.69	9.25	10.48	11.74	13.00	
ø63			4.05			4.79	5.61	6.34	7.07	7.81	8.54	9.27	11.06	12.51	13.97	15.42	
ø80			7.02			8.12	9.51	10.60	11.70	12.80	13.90	15.00	17.80	19.92	22.10	24.30	
ø100			10.24			11.58	13.29	14.63	15.96	17.30	18.64	19.98	23.27	25.94	28.62	31.29	

● STG-B

Unit: kg

Item	Stroke length																Switch weight
Bore size (mm)	10	20	25	30	40	50	75	100	125	150	175	200	250	300	350	400	
ø12	0.23	0.26		0.29	0.34	0.38	0.46	0.54	0.64	0.72	0.81	0.88	1.05				Refer to the weight in the switch specifications.
ø16	0.33	0.38		0.42	0.49	0.54	0.65	0.77	0.90	1.01	1.13	1.24	1.46				
ø20		0.68		0.75	0.86	0.94	1.11	1.27	1.47	1.64	1.81	1.98	2.35	2.69	3.03	3.37	
ø25		0.95		1.04	1.21	1.30	1.52	1.76	2.02	2.24	2.46	2.69	3.17	3.63	4.07	4.52	
ø32			1.49			1.79	2.23	2.54	2.90	3.21	3.51	3.82	4.49	5.10	5.71	6.32	
ø40			1.74			2.09	2.56	2.91	3.32	3.67	4.02	4.37	5.12	5.82	6.52	7.22	
ø50			3.02			3.55	4.28	4.81	5.43	5.97	6.50	7.03	8.23	9.28	10.38	11.45	
ø63			3.81			4.45	5.30	5.94	6.67	7.31	7.96	8.60	9.99	11.35	12.61	13.87	
ø80			7.25			8.03	9.27	10.30	11.30	12.10	13.31	14.32	16.60	18.60	20.62	22.64	
ø100			10.15			11.69	13.57	14.81	16.05	17.29	18.52	19.76	22.85	25.32	27.80	30.27	

LCM
LCR
LCG
LCW
LCX
STM
STG
STS/STL
STR2
UCA2
ULK*
JSK/M2
JSG
JSC3/JSC4
USSD
UFCD
USC
UB
JSB3
LMB
LML
HCM
HCA
LBC
CAC4
UCAC2
CAC-N
UCAC-N
RCS2
RCC2
PCC
SHC
MCP
GLC
MFC
BBS
RRC
GRC
RV3*
NHS
HRL
LN
Hand
Chuk
MecHnd/Chuk
ShkAbs
FJ
FK
SpdContr
Ending

How to order

Without switch (built-in magnet for switch)

STG - M - 32 ◯ - 25 ———— P6

With switch (built-in magnet for switch)

STG - M - 32 ◯ - 25 - T2H - R - P6

Model No.

Ⓐ Bearing

Ⓑ Bore size

Ⓒ Port thread

Ⓓ Stroke length

Ⓔ Switch model No. *1 *3 *4

Ⓕ Switch quantity

Ⓖ Option *2

Code	Description
Ⓐ Bearing	
M	Metal bush bearing
B	Ball bearing
Ⓑ Bore size (mm)	
12	ø12
16	ø16
20	ø20
25	ø25
32	ø32
40	ø40
50	ø50
63	ø63
80	ø80
100	ø100
Ⓒ Port thread	
Blank	M5(ø12 to ø16)
	Rc thread (ø20 to ø100)
NN	NPT thread (ø20 or more) made-to-order product
GN	G thread (ø20 or more) made-to-order product
Ⓓ Stroke length (mm)	
Refer to the stroke length table on the following page	

Ⓔ Switch model No.

Axial lead wire	Radial lead wire	Contact	Voltage AC	Voltage DC	Display	Lead wire
T0H*	**T0V***	Reed	●	●	1-color display	2-wire
T5H*	**T5V***	Reed	●	●	Without indicator lamp	2-wire
T8H*	**T8V***	Reed	●	●	1-color display	2-wire
T1H*	**T1V***	Proximity	●		1-color display	2-wire
T2H*	**T2V***	Proximity		●	1-color display	2-wire
T3H*	**T3V***	Proximity		●	1-color display	3-wire
T3PH*	**T3PV***	Proximity		●	1-color display	3-wire
T2WH*	**T2WV***	Proximity		●	2-color display	2-wire
T2YH*	**T2YV***	Proximity		●	2-color display	2-wire
T3WH*	**T3WV***	Proximity		●	2-color display	3-wire
T3YH*	**T3YV***	Proximity		●	2-color display	3-wire
T2JH*	**T2JV***	Proximity		●	1-color display off-delay	2-wire
T2YD*	**-**	Proximity		●	2-color display AC magnetic field	2-wire
T2YDT*	**-**	Proximity		●	2-color display AC magnetic field	2-wire

* Lead wire length	
Blank	1 m (standard)
3	3 m (option)
5	5 m (option)

Ⓕ Switch quantity	
R	1 on rod side
H	1 on head side
D	2
T	3

Ⓖ Option	
P6	Copper and PTFE free (for STG-B-12 to 32, copper and PTFE free is provided as standard)

⚠ Precautions for model No. selection

*1: Switches other than Ⓔ Switch model No. are also available. (Made-to-order product)
Refer to Ending Page 1 for details.
*2: ⒼCopper and PTFE free specifications for STG-M/B-80, 100 must be made to order.
*3: T8H/V switch cannot be installed on STG-12 or 16.
*4: Switches are shipped with the product. Contact CKD if assembling before shipment is necessary.

[Example of model No.]

STG-B-40-75-T0H-D

Model: Guided cylinder, double acting/single rod

Ⓐ Bearing : Ball bearing
Ⓑ Bore size : ø40 mm
Ⓒ Port thread : Rc thread
Ⓓ Stroke length : 75 mm
Ⓔ Switch model No. : Reed T0H switch, lead wire length 1 m
Ⓕ Switch quantity : 2

LCM
LCR
LCG
LCW
LCX
STM
STG
STS/STL
STR2
UCA2
ULK*
JSK/M2
JSG
JSC3/JSC4
USSD
UFCD
USC
UB
JSB3
LMB
LML
HCM
HCA
LBC
CAC4
UCAC2
CAC-N
UCAC-N
RCS2
RCC2
PCC
SHC
MCP
GLC
MFC
BBS
RRC
GRC
RV3*
NHS
HRL
LN
Hand
Chuk
MecHnd/Chuk
ShkAbs
FJ
FK
SpdContr
Ending

Ⓓ Stroke length

Stroke length (mm)		Applicable bore size									
		ø12	ø16	ø20	ø25	ø32	ø40	ø50	ø63	ø80	ø100
Standard stroke length	10	●	●								
	20	●	●	●	●						
	25					●	●	●	●	●	●
	30	●	●	●	●						
	40	●	●	●	●						
	50	●	●	●	●	●	●	●	●	●	●
	75	●	●	●	●	●	●	●	●	●	●
	100	●	●	●	●	●	●	●	●	●	●
	125	●	●	●	●	●	●	●	●	●	●
	150	●	●	●	●	●	●	●	●	●	●
	175	●	●	●	●	●	●	●	●	●	●
	200	●	●	●	●	●	●	●	●	●	●
	250	●	●	●	●	●	●	●	●	●	●
	300			●	●	●	●	●	●	●	●
	350			●	●	●	●	●	●	●	●
	400			●	●	●	●	●	●	●	●
Min. stroke length *3		5(10)									
Custom stroke length *1, *2		In 5 mm increments									

*1: The total dimensions are the same as the longer standard stroke length.
*2: A dedicated body with dimensions matched to the stroke length is available. Contact CKD for details.
*3: The value in ( ) is the min. stroke length for switches of the 2-color display and AC magnetic field proof.

How to order switch

SW - T0V

Switch model No.
(Item Ⓔ on page 338)

Note: Contact CKD when using
an environment-friendly T switch.

Specifications for rechargeable battery

(Catalog No. CC-1226A)

● Design compatible with rechargeable battery manufacturing process.

STG - M/B - ····· - P4*

LCM
LCR
LCG
LCW
LCX
STM
STG
STS/STL
STR2
UCA2
ULK*
JSK/M2
JSG
JSC3/JSC4
USSD
UFCD
USC
UB
JSB3
LMB
LML
HCM
HCA
LBC
CAC4
UCAC2
CAC-N
UCAC-N
RCS2
RCC2
PCC
SHC
MCP
GLC
MFC
BBS
RRC
GRC
RV3*
NHS
HRL
LN
Hand
Chuk
MecHnd/Chuk
ShkAbs
FJ
FK
SpdContr
Ending

Internal structure and parts list (STG-M-12 to 25)

● ø12, ø16

· 50 or less stroke length

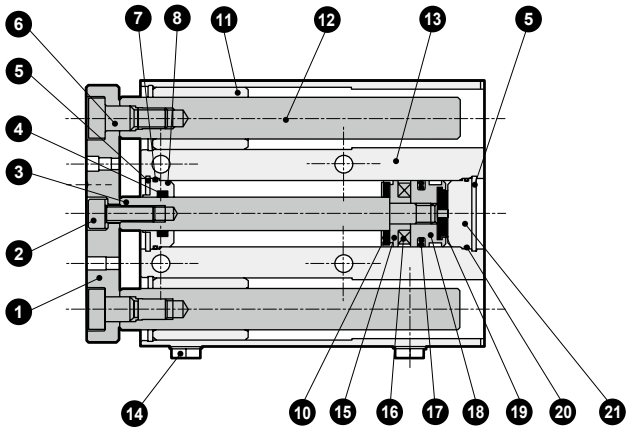

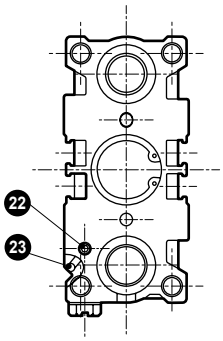

· Over 50 to 100 stroke length

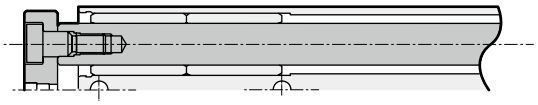

· Over 100 stroke length

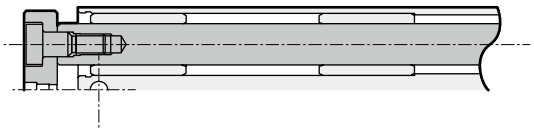

● ø20, ø25

· 50 or less stroke length

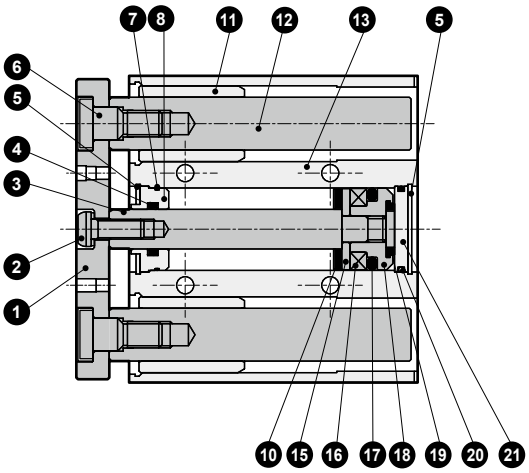

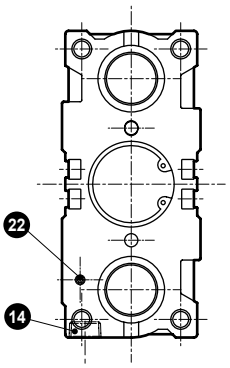

· Over 50 to 200 stroke length

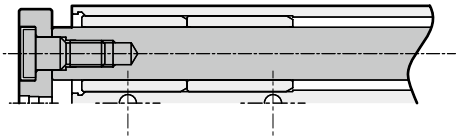

· Over 200 stroke length

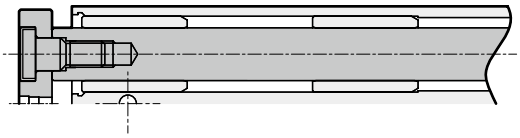

Internal structure and parts list (STG-M-32 to 63)

● ø32 to ø63

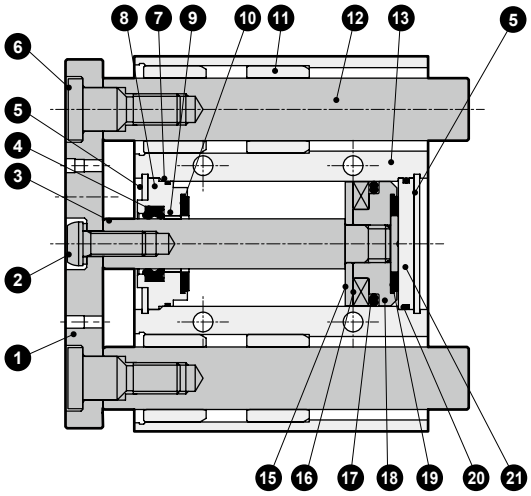

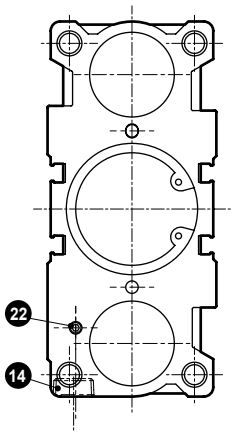

No.	Part name	Material	Remarks
1	End plate	Steel	Nickeling
2	Hex socket head cap screw (ø12 to ø16)	Steel	Zinc chromate
	Hex socket button head bolt (ø20 to ø63)	Steel	Zinc chromate
3	Piston rod	Stainless steel (ø12 to ø25)	Industrial chrome plating
		Steel (ø32 to ø63)	Industrial chrome plating
4	Rod packing	Nitrile rubber	
5	C type snap ring	Steel	Zinc phosphate
6	Bolt	Steel	Zinc chromate
7	Metal gasket	Nitrile rubber	
8	Rod metal	Special aluminum alloy (ø12 to ø32)	Alumite
		Aluminum alloy (ø40 to ø63)	Chromate
9	Bush	Oiles drymet (ø40 to ø63)	*1
10	Cushion rubber	Urethane rubber	
11	Metal	Oil-impregnated copper alloy bearing	*2

No.	Part name	Material	Remarks
12	Guide rod	Stainless steel (ø12 to ø16)	Industrial chrome plating
		Steel (ø20 to ø63)	Industrial chrome plating
13	Cylinder body	Aluminum alloy	Hard alumite
14	Plug	Copper alloy or steel	
15	Spacer	Aluminum alloy	
16	Magnet		
17	Piston packing	Nitrile rubber	
18	Piston	Aluminum alloy	
19	Cushion rubber	Urethane rubber	
20	O-ring	Nitrile rubber	
21	Base plate	Aluminum alloy	Chromate
22	Hexagon socket set screw	Stainless steel	
23	Steel ball	Stainless steel	

*1: Aluminum for copper and PTFE free.
*2: Oil-impregnated cast iron bearing for copper and PTFE free.

Repair parts list

Bore size (mm)	Kit No. STG-M/B	Repair parts No.
ø12	STG-12K	❹ ❼ ❿ ⓱ ⓳ ⓴
ø16	STG-16K	
ø20	STG-20K	
ø25	STG-25K	
ø32	STG-32K	
ø40	STG-40K	
ø50	STG-50K	
ø63	STG-63K	

LCM
LCR
LCG
LCW
LCX
STM
STG
STS/STL
STR2
UCA2
ULK*
JSK/M2
JSG
JSC3/JSC4
USSD
UFCD
USC
UB
JSB3
LMB
LML
HCM
HCA
LBC
CAC4
UCAC2
CAC-N
UCAC-N
RCS2
RCC2
PCC
SHC
MCP
GLC
MFC
BBS
RRC
GRC
RV3*
NHS
HRL
LN
Hand
Chuk
MecHnd/Chuk
ShkAbs
FJ
FK
SpdContr
Ending

Internal structure and parts list (STG-B-12 to 25)

● ø12, ø16

· 30 or less stroke length

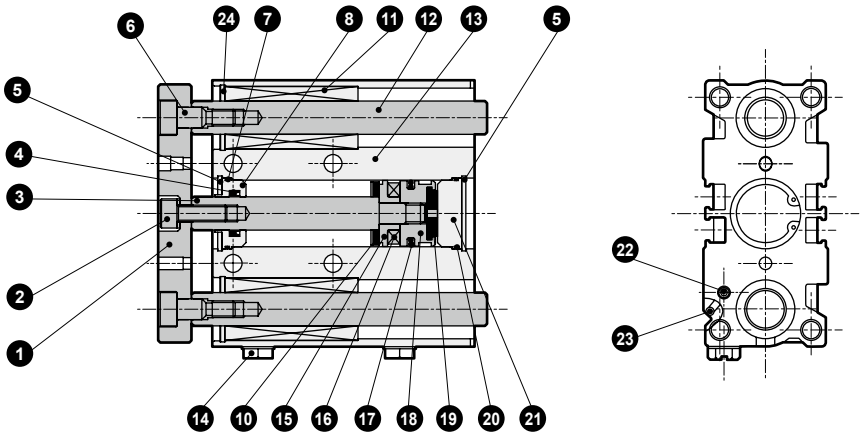

· Over 30 to 100 stroke length

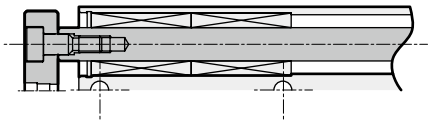

· Over 100 stroke length

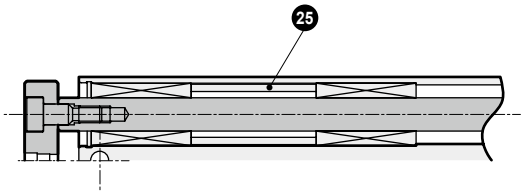

● ø20, ø25

· 30 or less stroke length

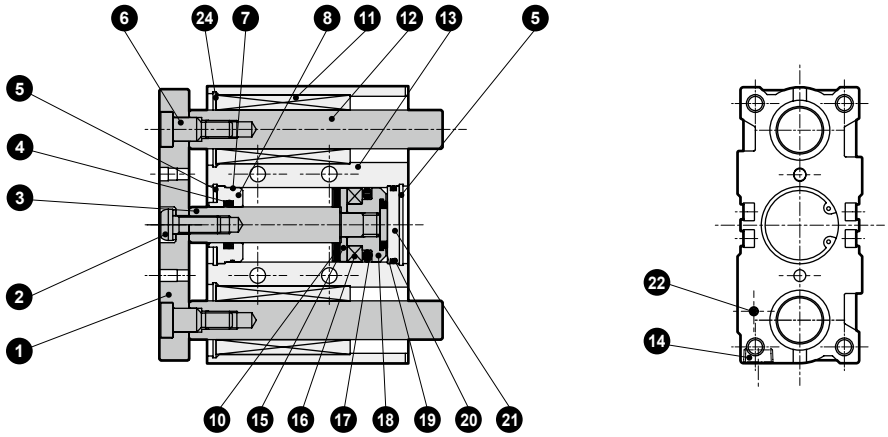

· Over 30 to 100 stroke length

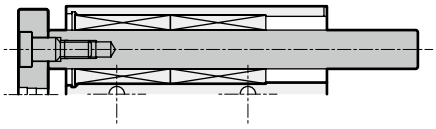

· Over 100 stroke length

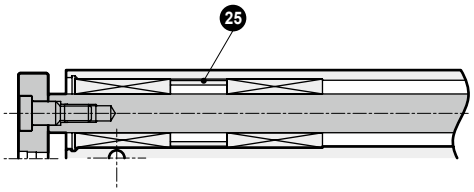

Internal structure and parts list (STG-B-32 to 63)

● ø32 to ø63

· 100 or less stroke length

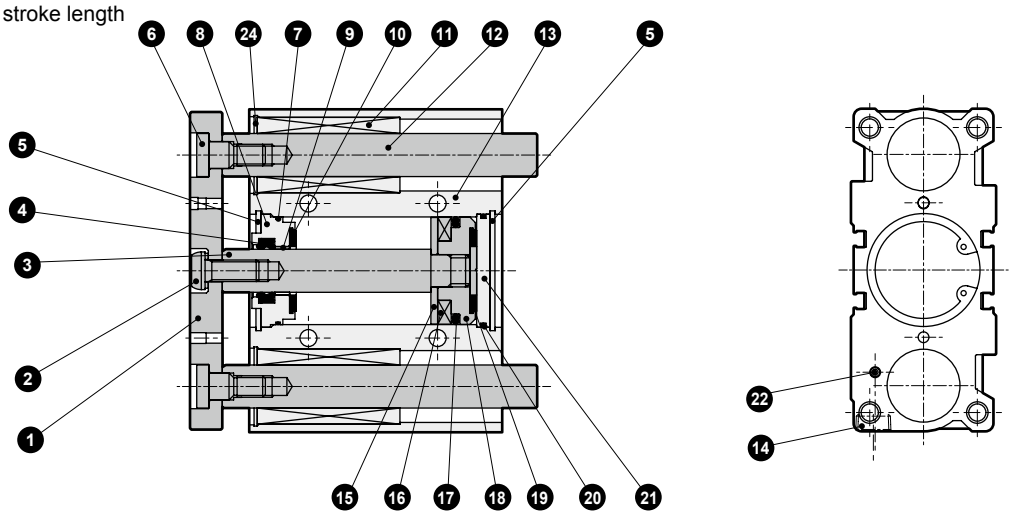

· Over 100 stroke length

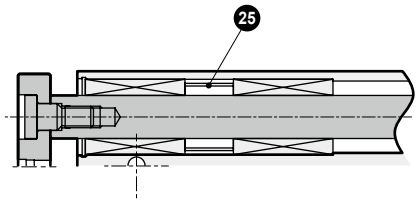

No.	Part name	Material	Remarks	No.	Part name	Material	Remarks
1	End plate	Steel	Nickeling	12	Guide rod	Steel	Industrial chrome plating
2	Hex socket head cap screw (ø12 to ø16)	Steel	Zinc chromate	13	Cylinder body	Aluminum alloy	Hard alumite
	Hex socket button head bolt (ø20 to ø63)	Steel	Zinc chromate	14	Plug	Copper alloy or steel	
3	Piston rod	Stainless steel (ø12 to ø25)	Industrial chrome plating	15	Spacer	Aluminum alloy	
		Steel (ø32 to ø63)	Industrial chrome plating	16	Magnet		
4	Rod packing	Nitrile rubber		17	Piston packing	Nitrile rubber	
5	C type snap ring	Steel	Zinc phosphate	18	Piston	Aluminum alloy	
6	Bolt	Steel	Zinc chromate	19	Cushion rubber	Urethane rubber	
7	Metal gasket	Nitrile rubber		20	O-ring	Nitrile rubber	
8	Rod metal	Special aluminum alloy (ø12 to ø32)	Alumite	21	Base plate	Aluminum alloy	Chromate
		Aluminum alloy (ø40 to ø63)	Chromate	22	Hexagon socket set screw	Stainless steel	
9	Bush	Dry bearing (ø40 to ø63)	*1	23	Steel ball	Stainless steel	
10	Cushion rubber	Urethane rubber		24	C type snap ring	Steel	Zinc phosphate
11	Ball bushing			25	Collar	Aluminum alloy	

*1: Aluminum for copper and PTFE free.

Repair parts list

Bore size (mm)	Kit No. STG-M/B	Repair parts No.
ø12	STG-12K	4 7 10 17 19 20
ø16	STG-16K	
ø20	STG-20K	
ø25	STG-25K	
ø32	STG-32K	
ø40	STG-40K	
ø50	STG-50K	
ø63	STG-63K	

LCM
LCR
LCG
LCW
LCX
STM
STG
STS/STL
STR2
UCA2
ULK*
JSK/M2
JSG
JSC3/JSC4
USSD
UFCD
USC
UB
JSB3
LMB
LML
HCM
HCA
LBC
CAC4
UCAC2
CAC-N
UCAC-N
RCS2
RCC2
PCC
SHC
MCP
GLC
MFC
BBS
RRC
GRC
RV3*
NHS
HRL
LN
Hand
Chuk
MecHnd/Chuk
ShkAbs
FJ
FK
SpdContr
Ending

Internal structure and parts list (STG-M-80, 100/STG-B-80, 100)

● STG-M-80,100

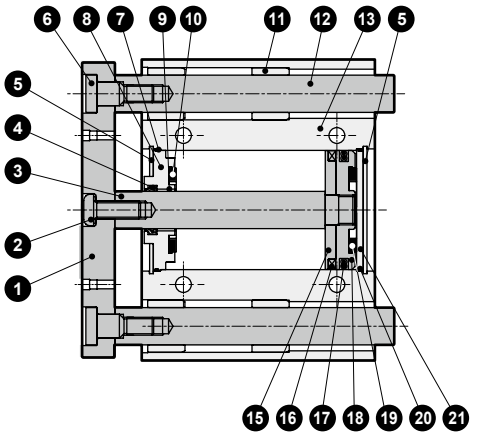

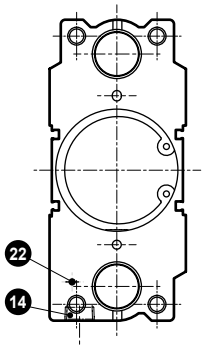

● STG-B-80,100

· Over 50 to 200 stroke length

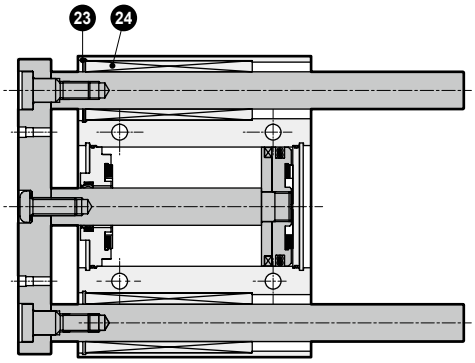

· 50 or less stroke length

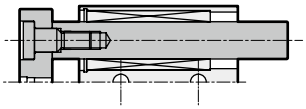

· Over 200 stroke length

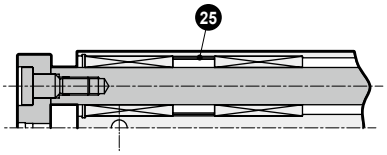

No.	Part name	Material	Remarks	No.	Part name	Material	Remarks
1	End plate	Steel	Nickeling	14	Plug	Steel	
2	Hexagon socket button head bolt	Steel	Zinc chromate	15	Spacer	Aluminum alloy	
3	Piston rod	Steel	Industrial chrome plating	16	Magnet		
4	Rod packing	Nitrile rubber		17	Piston packing	Nitrile rubber	
5	C type snap ring	Steel	Zinc phosphate	18	Piston	Aluminum alloy	
6	Bolt	Steel	Zinc chromate	19	Cushion rubber	Urethane rubber	
7	Metal gasket	Nitrile rubber		20	O-ring	Nitrile rubber	
8	Rod metal	Aluminum alloy	Chromate	21	Base plate	Steel	Zinc chromate
9	Bush	Oiles drymet		22	Hexagon socket set screw (ø80)	Stainless steel	
10	Cushion rubber	Urethane rubber			Plug (ø100)	Steel	Nickeling
11	Metal	Oil-impregnated copper alloy bearing		23	C type snap ring	Steel	Zinc phosphate
12	Guide rod	Steel	Industrial chrome plating	24	Ball bushing		
13	Cylinder body	Aluminum alloy	Hard alumite	25	Collar	Aluminum alloy	

Repair parts list

Bore size (mm)	Kit No. STG-M/B	Repair parts No.
ø80	STG-80K	4 7 10 17 19 20
ø100	STG-100K	

Dimensions (ø12, ø16, ø20, ø25)

CAD

● STG-12, 16, 20, 25

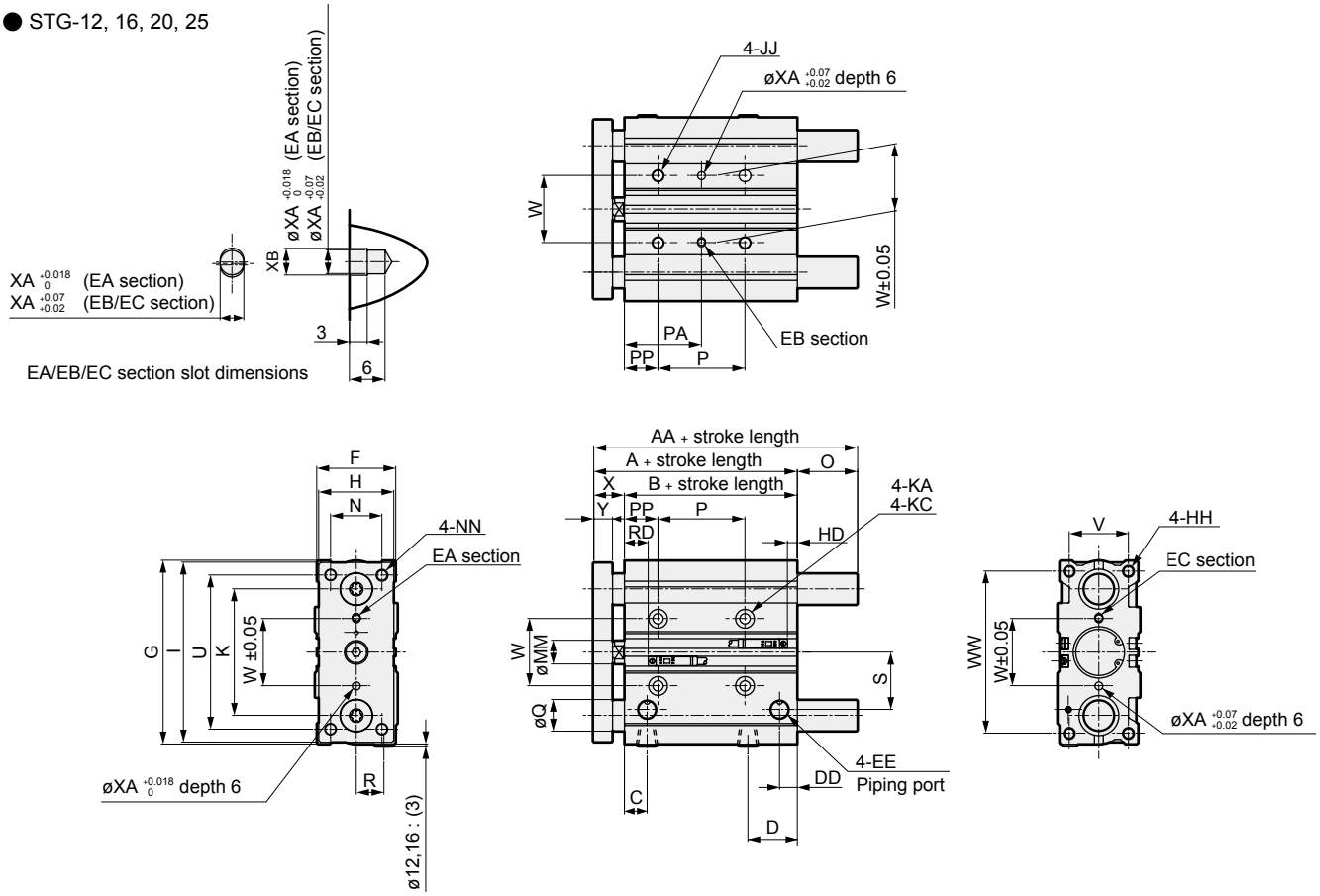

● STG-M/B common

Code / Bore size (mm)	Standard stroke length (mm)	A	B	C	D	DD	EE	F	G	H	HH	I	JJ
ø12	10,20,30,40,50,75,100,125	42	29	12	16	7	M5	26	58	22	M4 depth 10	56	M5 depth 10
ø16	150,175,200,250	46	33	12	18	7.5	M5	30	64	25	M5 depth 12	62	M5 depth 10
ø20	20,30,40,50,75,100,125,150	53	37	10.5	24.5	8.5	Rc1/8	36	83	30	M5 depth 13	81	M6 depth 12
ø25	175,200,250,300,350,400	53.5	37.5	11.5	25	9	Rc1/8	42	93	38	M6 depth 15	91	M6 depth 12

Code / Bore size (mm)	K	KA	MM	N	NN	KC	P: 30 or less	P: Over 30 to 100	P: Over 100 to 200	P: Over 200 to 300	P: Over 300
ø12	41	4.3 through	6	14	M4 through	7.5 spot face depth 4.5	20	40	110	200	-
ø16	46	4.3 through	8	16	M5 through	8 spot face depth 4.5	24	44	110	200	-
ø20	54	5.2 through	10	18	M5 through	9.5 spot face depth 5.5	24	44	120	200	300
ø25	64	5.2 through	12	26	M6 through	9.5 spot face depth 5.5	24	44	120	200	300

Code / Bore size (mm)	PA: 30 or less	PA: Over 30 to 100	PA: Over 100 to 200	PA: Over 200 to 300	PA: Over 300	PP	R	S	U	V	W	WW	X	Y	T0/T5/T2/T3 RD	T0/T5/T2/T3 HD	T2W/T3W RD	T2W/T3W HD	XA	XB
ø12	15	25	60	105	-	5	8	17	48	18	23	50	13 0 -1.5	7.5	5	5	7	7	3	3.5
ø16	17	27	60	105	-	5	10	18	54	22	24	56	13 0 -1.5	7.5	4	10	6	12	3	3.5
ø20	29	39	77	117	167	17	11	25	70	24	28	72	16 0 -2	9.5	9.5	8.5	11.5	10.5	3	3.5
ø25	29	39	77	117	167	17	14	29	78	30	34	82	16 0 -2	9.5	10	8.5	12	10.5	4	4.5

● STG-M

Code / Bore size (mm)	AA: 50 or less	AA: Over 50 to 100	AA: Over 100	Q	O: 50 or less	O: Over 50 to 100	O: Over 100
ø12	42	55	85	8	0	13	43
ø16	46	63	95	10	0	17	49

Code / Bore size (mm)	AA: 50 or less	AA: Over 50 to 200	AA: Over 200	Q	O: 50 or less	O: Over 50 to 200	O: Over 200
ø20	53	78	122	12	0	25	69
ø25	53.5	84	122	16	0	30.5	68.5

*1 : When using a custom stroke length, the total dimensions are the same as the longer standard stroke length.

*2 : Refer to page 410 for RD, HD and protruding dimensions of the 2-color display (except for T2WH/V and T3WH/V), off-delay, AC magnetic field proof, T1H/V and T8H/V switches.

● STG-B

Code / Bore size (mm)	AA: 30 or less	AA: Over 30 to 100	AA: Over 100	Q	O: 30 or less	O: Over 30 to 100	O: Over 100
ø12	43	55	85	6	1	13	43
ø16	49	65	95	8	3	19	49

Code / Bore size (mm)	AA: 30 or less	AA: Over 30 to 100	AA: Over 100 to 200	AA: Over 200	Q	O: 30 or less	O: Over 30 to 100	O: Over 100 to 200	O: Over 200
ø20	59	78	100	122	10	6	25	47	69
ø25	65	84	103	122	13	11.5	30.5	49.5	68.5

LCM
LCR
LCG
LCW
LCX
STM
STG
STS/STL
STR2
UCA2
ULK*
JSK/M2
JSG
JSC3/JSC4
USSD
UFCD
USC
UB
JSB3
LMB
LML
HCM
HCA
LBC
CAC4
UCAC2
CAC-N
UCAC-N
RCS2
RCC2
PCC
SHC
MCP
GLC
MFC
BBS
RRC
GRC
RV3*
NHS
HRL
LN
Hand
Chuk
MecHnd/Chuk
ShkAbs
FJ
FK
SpdContr
Ending

Dimensions (ø32, ø40, ø50, ø63)

CAD

● STG-32, 40, 50, 63

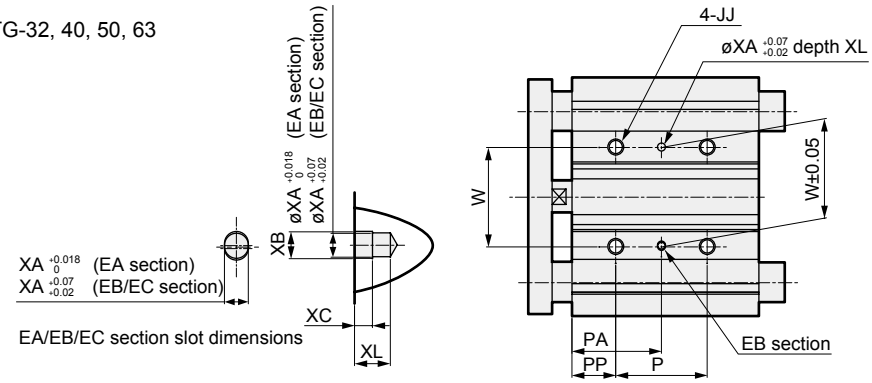

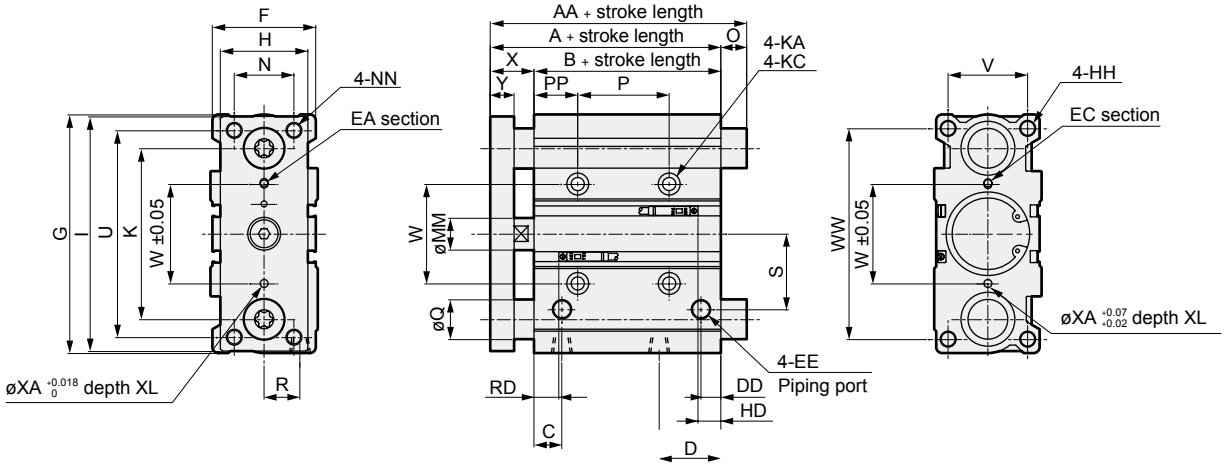

● STG-M/B common

Code / Bore size (mm)	Standard stroke length (mm)	A	B	C	D	DD	EE	F	G	H	HH	I	JJ	K	KA
ø32	25,50,75,100,125, 150,175,200,250, 300,350,400	59.5	37.5	12.5	30.5	9	Rc1/8	48	112	44	M8 depth 20	110	M8 depth 16	78	6.3 through
ø40		66	44	14	31	10	Rc1/8	54	120	44	M8 depth 20	118	M8 depth 16	86	6.3 through
ø50		72	44	14	35	11	Rc1/4	64	148	60	M10 depth 22	146	M10 depth 20	110	8.6 through
ø63		77	49	16.5	35	15	Rc1/4	78	162	70	M10 depth 22	158	M10 depth 20	124	8.6 through

Code / Bore size (mm)	KC	MM	N	NN	P					PA	
					25 or less	Over 25 to 100	Over 100 to 200	Over 200 to 300	Over 300	25 or less	Over 25 to 100
ø32	11 spot face depth 7.5	16	30	M8 through	24	48	124	200	300	33	45
ø40	11 spot face depth 7.5	16	30	M8 through	24	48	124	200	300	34	46
ø50	14 spot face depth 9	20	40	M10 through	24	48	124	200	300	36	48
ø63	14 spot face depth 9	20	50	M10 through	28	52	128	200	300	38	50

Code / Bore size (mm)	PA			PP	R	S	U	V	W	WW	X	Y	T0/T5/T2/T3		T2W/T3W		XA	XB	XC	XL
	Over 100 to 200	Over 200 to 300	Over 300										RD	HD	RD	HD				
ø32	83	121	171	21	15	34	96	34	42	98	22 0 -2	11.5	10	8.5	12	10.5	4	4.5	3	6
ø40	84	122	172	22	18	38	104	40	50	106	22 0 -2	11.5	13	12	15	14	4	4.5	3	6
ø50	86	124	174	24	21.5	47	130	46	66	130	28 0 -2	15.5	13.5	11.5	15.5	13.5	5	6	4	8
ø63	88	124	174	24	28	55	130	58	80	142	28 0 -2	15.5	14	16	16	18	5	6	4	8

● STG-M

Code / Bore size (mm)	AA			Q	O		
	50 or less	Over 50 to 200	Over 200		50 or less	Over 50 to 200	200 Over
ø32	79	100	140	20	19.5	40.5	80.5
ø40	79	100	140	20	13	34	74
ø50	91	116	161	25	19	44	89
ø63	91	116	161	25	14	39	84

*1 : When using a custom stroke length, the total dimensions are the same as the longer standard stroke length.

*2 : Refer to page 410 for RD, HD and protruding dimensions of the 2-color display (except for T2WH/V and T3WH/V), off-delay, AC magnetic field proof, T1H/V and T8H/V switches.

● STG-B

Code / Bore size (mm)	AA				Q	O			
	50 or less	Over 50 to 100	Over 100 to 200	Over 200		50 or less	Over 50 to 100	Over 100 to 200	Over 200
ø32	79	98	118	140	16	19.5	38.5	58.5	80.5
ø40	79	98	118	140	16	13	32	52	74
ø50	91	114	134	161	20	19	42	62	89
ø63	91	114	134	161	20	14	37	57	84

Dimensions (ø80)

● STG-80

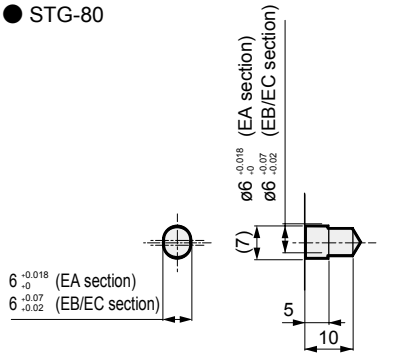

EA/EB/EC section slot dimensions

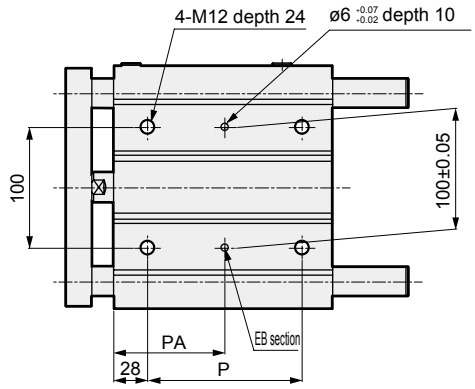

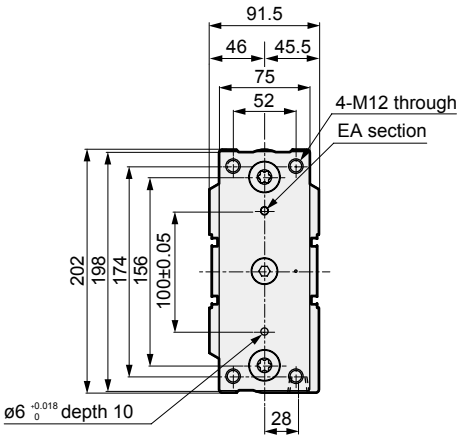

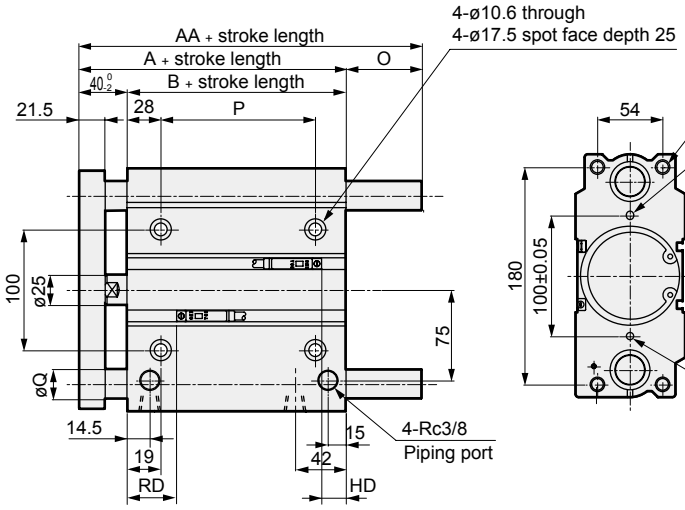

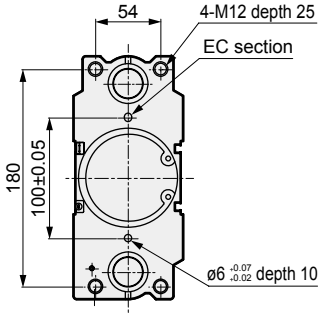

● STG-M/B common

Standard stroke length	A	B	P					PA					T0/T5/T2/T3		T2W/T3W	
			25 st or less	Over 25 st to 100 st	Over 100 st to 200 st	Over 200 st to 300 st	Over 300 st	25 st or less	Over 25 st to 100 st	Over 100 st to 200 st	Over 200 st to 300 st	Over 300 st	RD	HD	RD	HD
25,50,75,100,125,150, 175,200,250,300,350,400	96.5	56.5	28	52	128	200	300	42	54	92	128	178	18	19.5	20	21.5

● STG-M

AA			Q	O		
50 st or less	Over 50 st to 200 st	Over 200 st		50 st or less	Over 50 st to 200 st	Over 200 st
115	142	193	30	18.5	45.5	96.5

● STG-B

AA				Q	O			
25 st or less	Over 25 st to 50 st	Over 50 st to 200 st	Over 200 st		25 st or less	Over 25 st to 50 st	Over 50 st to 200 st	Over 200 st
109.5	130	160	193	25	13	33.5	63.5	96.5

*1 : When using a custom stroke length, the total dimensions are the same as the longer standard stroke length.
*2 : Refer to page 410 for RD, HD and protruding dimensions of the 2-color display (except for T2WH/V and T3WH/V), off-delay, AC magnetic field proof, T1H/V and T8H/V switches.

LCM
LCR
LCG
LCW
LCX
STM
STG
STS/STL
STR2
UCA2
ULK*
JSK/M2
JSG
JSC3/JSC4
USSD
UFCD
USC
UB
JSB3
LMB
LML
HCM
HCA
LBC
CAC4
UCAC2
CAC-N
UCAC-N
RCS2
RCC2
PCC
SHC
MCP
GLC
MFC
BBS
RRC
GRC
RV3*
NHS
HRL
LN
Hand
Chuk
MecHnd/Chuk
ShkAbs
FJ
FK
SpdContr
Ending

Dimensions (ø100)

● STG-100

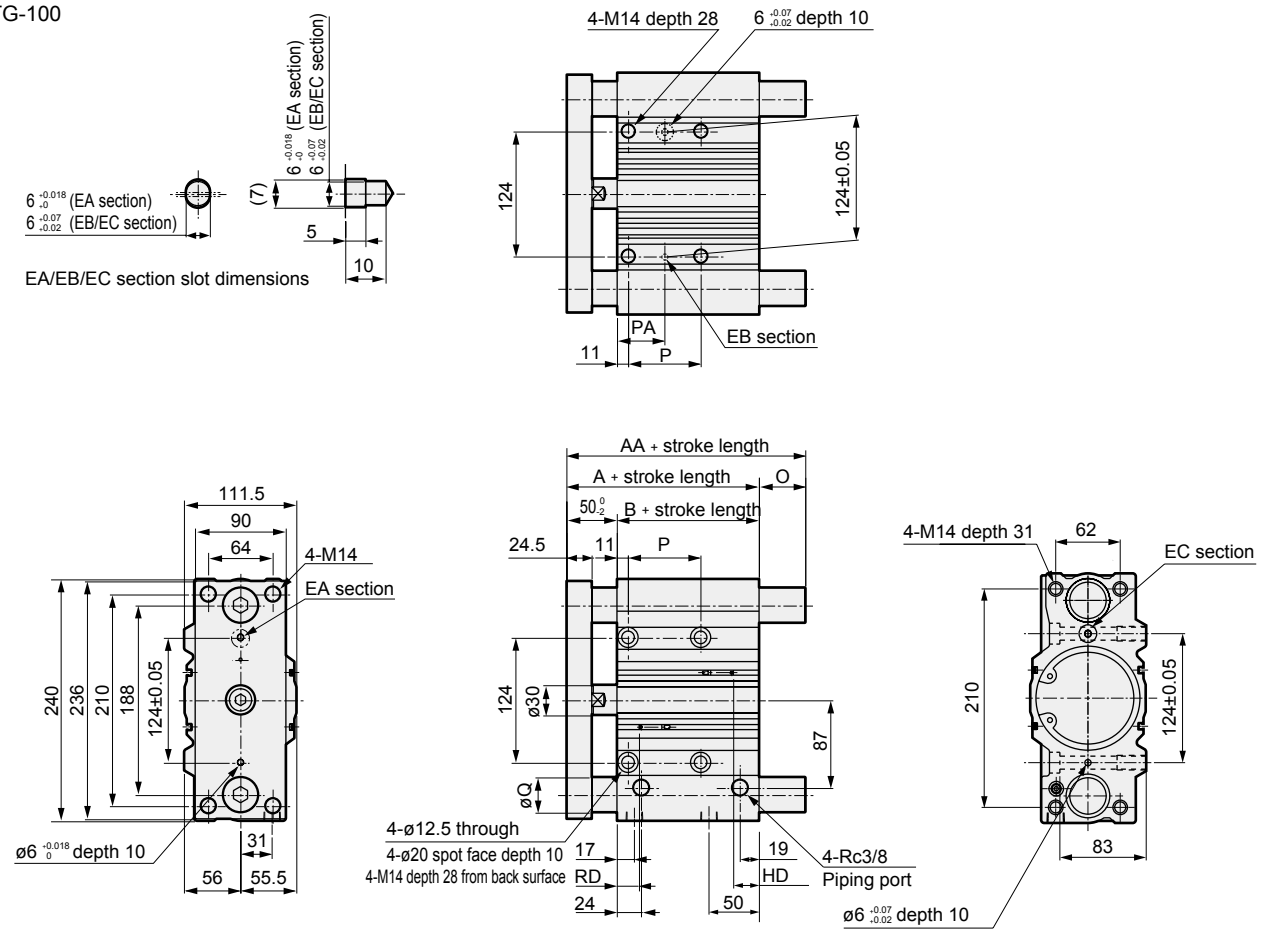

● STS-M/B common

Standard stroke length	A	B	P					PA					T0/T5/T2/T3		T2W/T3W	
			25 st or less	Over 25 st to 100 st	Over 100 st to 200 st	Over 200 st to 300 st	Over 300 st	25 st or less	Over 25 st to 100 st	Over 100 st to 200 st	Over 200 st to 300 st	Over 300 st	RD	HD	RD	HD
25,50,75,100,125,150, 175,200,250,300,350,400	116	66	48	72	148	220	320	35	47	85	121	171	22	25.5	24	27.5

● STG-M

AA			Q	O		
50 st or less	Over 50 st to 200 st	Over 200 st		50 st or less	Over 50 st to 200 st	Over 200 st
137	162	203	35	21	46	87

● STG-B

AA				Q	O			
25 st or less	Over 25 st to 50 st	Over 50 st to 200 st	Over 200 st		25 st or less	Over 25 st to 50 st	Over 50 st to 200 st	Over 200 st
121	147	180	203	30	5	31	64	87

MEMO

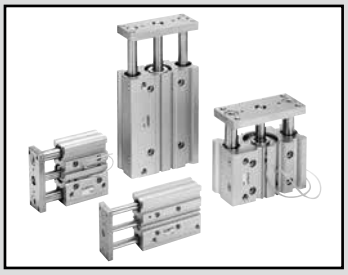

Guided cylinder, double acting/rubber-air cushioned

STG-$^{M}_{B}$-*C Series

● Bore size: ø32/ø40/ø50/ø63

JIS symbol

RoHS CAD

Specifications

Item		STG-M/B-*C			
Bore size	mm	ø32	ø40	ø50	ø63
Actuation		Double acting			
Working fluid		Compressed air			
Max. working pressure	MPa	1.0 (≈150 psi, 10 bar)			
Min. working pressure	MPa	0.2 (≈29 psi, 2 bar)			
Proof pressure	MPa	1.6 (≈230 psi, 16 bar)			
Ambient temperature	°C	-10 (14°F) to 60 (140°F) (no freezing)			
Port size		Rc1/8		Rc1/4	
Stroke tolerance	mm	+2.0 0			
Working piston speed	mm/s	50 to 500			50 to 300
Cushion		Rubber-air cushioned			
Lubrication		Not required (use turbine oil class 1 ISO VG32 if necessary for lubrication)			
Allowable absorbed energy	J	0.401	0.627	0.980	1.560

Stroke length

Bore size	Standard stroke length (mm)	Max. stroke length (mm)	Min. stroke length (mm)	Min. stroke (mm)(switch)
ø32	25/50/75/100 125/150/175 200/250/300 350/400	400	5	5(10) *2
ø40				
ø50				
ø63			10	10

*1: The custom stroke length is available in 5 mm increments. However, the total dimensions are the same as the longer standard stroke length.
*2: For types with one or two switches. The value in ( ) is the min. stroke length for switches of the 2-color display and AC magnetic field proof.

Rubber-air cushion mechanism

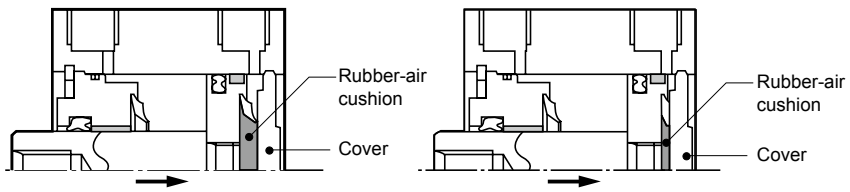

When pulled

An airtight space is created in the area when the piston operates and the rubber-air cushion and cover make contact.
Air in the airtight area is further compressed, absorbing energy as the piston operates.
At the end of the stroke, energy generated by compression distortion of the air cushion is also added.

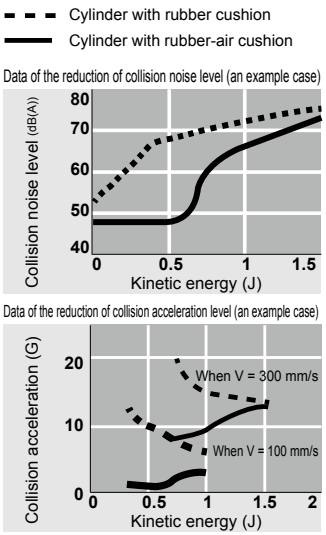

LCM
LCR
LCG
LCW
LCX
STM
STG
STS/STL
STR2
UCA2
ULK*
JSK/M2
JSG
JSC3/JSC4
USSD
UFCD
USC
UB
JSB3
LMB
LML
HCM
HCA
LBC
CAC4
UCAC2
CAC-N
UCAC-N
RCS2
RCC2
PCC
SHC
MCP
GLC
MFC
BBS
RRC
GRC
RV3*
NHS
HRL
LN
Hand
Chuk
MecHnd/Chuk
ShkAbs
FJ
FK
SpdContr
Ending

Switch specifications

● 1-color/2-color display/for AC magnetic field proof

Item	Proximity 2-wire	Proximity 2-wire			Proximity 3-wire				Reed 2-wire							Proximity 2-wire
	T1H/ T1V	T2H/T2V/ T2JH/T2JV	T2YH/ T2YV	T2WH/ T2WV	T3H/ T3V	T3PH/ T3PV	T3YH/ T3YV	T3WH/ T3WV	T0H/T0V		T5H/T5V		T8H/T8V			T2YD(*4) T2YDT
Applications	For programmable controller, relay, compact solenoid valve	Dedicated for programmable controller			For programmable controller, relay				For programmable controller, relay		For programmable controller, relay, IC circuit (no indicator lamp), serial connection		For programmable controller, relay			For programmable controller
Output method	-				NPN output	PNP output	NPN output	NPN output	-							
Pwr. supp. V.	-				10 to 28 VDC				-							
Load voltage	85 to 265 VAC	10 to 30 VDC		24 VDC ±10%	30 VDC or less				12/24 VDC	100/110 VAC	5/12/24 VDC	100/110 VAC	12/24 VDC	110 VAC	220 VAC	24 VDC ±10%
Load current	5 to 100 mA	5 to 20 mA (*3)			100 mA or less		50 mA or less		5 to 50 mA	7 to 20 mA	≤50 mA	≤20 mA	5 to 50 mA	7 to 20 mA	7 to 10 mA	5 to 20 mA
Indicator lamp	LED (Lit when ON)	LED (Lit when ON)	Red/green LED (Lit when ON)	Red/green LED (Lit when ON)	LED (Lit when ON)	Yellow LED (Lit when ON)	Red/green LED (Lit when ON)	Red/green LED (Lit when ON)	LED (Lit when ON)		Without indicator lamp		LED (Lit when ON)			Red/green LED (Lit when ON)
Leakage current	≤1 mA at 100 VAC, ≤2 mA at 200 VAC	1 mA or less			10 μA or less				0 mA							1 mA or less
Weight g	1 m:33 3 m:87 5 m:142	1 m:18 3 m:49 5 m:80	1 m:33 3 m:87 5 m:142	1 m:18 3 m:49 5 m:80	1 m:18 3 m:49 5 m:80		1 m:33 3 m:87 5 m:142	1 m:18 3 m:49 5 m:80	1 m:18 3 m:49 5 m:80				1 m:33 3 m:87 5 m:142			1 m:61 3 m:166 5 m:272

*1 : Refer to Ending Page 1 for detailed switch specifications and dimensions.
*2 : Switches other than the above models, such as switches with connectors, are also available. Refer to Ending Page 1.
*3 : The max. load current is 20 mA at 25°C. The current is lower than 20 mA if the operating ambient temperature around the switch is higher than 25°C. (5 to 10 mA at 60°C)
*4 : AC magnetic field proof switch (T2YD/T2YDT) cannot be used in DC magnetic fields.

Cylinder weight

● STG-M-*C

Unit: kg

Item / Bore size (mm)	Stroke length 25	50	75	100	125	150	175	200	250	300	350	400	Switch weight
ø32	1.64	2.01	2.54	2.94	3.34	3.73	4.12	4.51	5.49	6.27	7.07	7.85	Refer to the weight in the switch specifications.
ø40	1.89	2.30	2.75	3.15	3.57	3.98	4.39	4.80	5.81	6.64	7.47	8.29	
ø50	3.26	3.88	4.59	5.21	5.83	6.45	7.07	7.69	9.25	10.48	11.74	13.00	
ø63	4.05	4.79	5.61	6.34	7.07	7.81	8.54	9.27	11.06	12.51	13.97	15.42	

● STG-B-*C

Unit: kg

Item / Bore size (mm)	Stroke length 25	50	75	100	125	150	175	200	250	300	350	400	Switch weight
ø32	1.49	1.79	2.23	2.54	2.90	3.21	3.51	3.82	4.49	5.10	5.71	6.32	Refer to the weight in the switch specifications.
ø40	1.74	2.09	2.56	2.91	3.32	3.67	4.02	4.37	5.12	5.82	6.52	7.22	
ø50	3.02	3.55	4.28	4.81	5.43	5.97	6.50	7.03	8.23	9.28	10.38	11.45	
ø63	3.81	4.45	5.30	5.94	6.67	7.31	7.96	8.60	9.99	11.35	12.61	13.87	

Theoretical thrust table

(Unit: N)

Bore size (mm)	Operating direction	Working pressure MPa 0.2	0.3	0.4	0.5	0.6	0.7	0.8	0.9	1.0
ø32	Push	1.61×10^2	2.41×10^2	3.22×10^2	4.02×10^2	4.83×10^2	5.63×10^2	6.43×10^2	7.24×10^2	8.04×10^2
	Pull	1.21×10^2	1.81×10^2	2.41×10^2	3.02×10^2	3.62×10^2	4.22×10^2	4.83×10^2	5.43×10^2	6.03×10^2
ø40	Push	2.51×10^2	3.77×10^2	5.03×10^2	6.28×10^2	7.54×10^2	8.80×10^2	1.01×10^3	1.13×10^3	1.26×10^3
	Pull	2.11×10^2	3.17×10^2	4.22×10^2	5.28×10^2	6.33×10^2	7.39×10^2	8.44×10^2	9.50×10^2	1.06×10^3
ø50	Push	3.93×10^2	5.89×10^2	7.85×10^2	9.82×10^2	1.18×10^3	1.37×10^3	1.57×10^3	1.77×10^3	1.96×10^3
	Pull	3.30×10^2	4.95×10^2	6.60×10^2	8.25×10^2	9.90×10^2	1.15×10^3	1.32×10^3	1.48×10^3	1.65×10^3
ø63	Push	6.23×10^2	9.35×10^2	1.25×10^3	1.56×10^3	1.87×10^3	2.18×10^3	2.49×10^3	2.81×10^3	3.12×10^3
	Pull	5.61×10^2	8.41×10^2	1.12×10^3	1.40×10^3	1.68×10^3	1.96×10^3	2.24×10^3	2.52×10^3	2.80×10^3

LCM
LCR
LCG
LCW
LCX
STM
STG
STS/STL
STR2
UCA2
ULK*
JSK/M2
JSG
JSC3/JSC4
USSD
UFCD
USC
UB
JSB3
LMB
LML
HCM
HCA
LBC
CAC4
UCAC2
CAC-N
UCAC-N
RCS2
RCC2
PCC
SHC
MCP
GLC
MFC
BBS
RRC
GRC
RV3*
NHS
HRL
LN
Hand
Chuk
MecHnd/Chuk
ShkAbs
FJ
FK
SpdContr
Ending

How to order

Without switch (built-in magnet for switch)

STG - M - 32 ◯ C - 25

With switch (built-in magnet for switch)

STG - M - 32 ◯ C - 25 - T2H - R

Model No.

Ⓐ Bearing

Ⓑ Bore size

Ⓒ Port thread

Rubber-air cushioned

Ⓓ Stroke length

Ⓔ Switch model No. *1, *2

Ⓕ Switch quantity

Code	Description
Ⓐ Bearing	
M	Metal bush bearing
B	Ball bearing
Ⓑ Bore size (mm)	
32	ø32
40	ø40
50	ø50
63	ø63
Ⓒ Port thread	
Blank	Rc thread
N	NPT thread (made-to-order product)
G	G thread (made-to-order product)
Ⓓ Stroke length (mm)	
Refer to the stroke length table on the following page	

Ⓔ Switch model No.

Axial lead wire	Radial lead wire	Contact	Voltage AC	Voltage DC	Display	Lead wire
T0H*	**T0V***	Reed	●	●	1-color display	2-wire
T5H*	**T5V***	Reed	●	●	Without indicator lamp	2-wire
T8H*	**T8V***	Reed	●	●	1-color display	2-wire
T1H*	**T1V***	Proximity	●		1-color display	2-wire
T2H*	**T2V***	Proximity		●	1-color display	2-wire
T3H*	**T3V***	Proximity		●	1-color display	3-wire
T3PH*	**T3PV***	Proximity		●	1-color display	3-wire
T2WH*	**T2WV***	Proximity		●	2-color display	2-wire
T2YH*	**T2YV***	Proximity		●	2-color display	2-wire
T3WH*	**T3WV***	Proximity		●	2-color display	3-wire
T3YH*	**T3YV***	Proximity		●	2-color display	3-wire
T2JH*	**T2JV***	Proximity		●	1-color display off-delay	2-wire
T2YD*	**-**	Proximity		●	2-color display for AC magnetic field	2-wire
T2YDT*	**-**	Proximity		●	2-color display for AC magnetic field	2-wire

*** Lead wire length**	
Blank	1 m (standard)
3	3 m (option)
5	5 m (option)

Ⓕ Switch quantity	
R	1 on rod side
H	1 on head side
D	2
T	3

⚠ Precautions for model No. selection

*1 : Switches other than Ⓔ Switch model No. are also available. (Made-to-order product)Refer to Ending Page 1 for details.

*2 : Switches are shipped with the product. Contact CKD if assembling before shipment is necessary.

[Example of model No.]

STG-M-32C-50-T0H-R

Model: Guided cylinder double acting/with rubber-air cushioned

Ⓐ Bearing : Metal bush bearing
Ⓑ Bore size : ø32 mm
Ⓒ Port thread : Rc thread
Ⓓ Stroke length : 50 mm
Ⓔ Switch model No. : Reed T0H switch, lead wire length 1 m
Ⓕ Switch quantity : 1 on rod side

LCM
LCR
LCG
LCW
LCX
STM
STG
STS/STL
STR2
UCA2
ULK*
JSK/M2
JSG
JSC3/JSC4
USSD
UFCD
USC
UB
JSB3
LMB
LML
HCM
HCA
LBC
CAC4
UCAC2
CAC-N
UCAC-N
RCS2
RCC2
PCC
SHC
MCP
GLC
MFC
BBS
RRC
GRC
RV3*
NHS
HRL
LN
Hand
Chuk
MecHnd/Chuk
ShkAbs
FJ
FK
SpdContr
Ending

Ⓓ Stroke length

Stroke length (mm)		Applicable bore size			
		ø32	ø40	ø50	ø63
Standard stroke length	25	●	●	●	●
	50	●	●	●	●
	75	●	●	●	●
	100	●	●	●	●
	125	●	●	●	●
	150	●	●	●	●
	175	●	●	●	●
	200	●	●	●	●
	250	●	●	●	●
	300	●	●	●	●
	350	●	●	●	●
	400	●	●	●	●
Min. stroke length *2		5(10)			10
Custom stroke length *1		In 5 mm increments			

*1: The total dimensions are the same as the longer standard stroke length.
*2: The value in ( ) is the min. stroke length for switches of the 2-color display and AC magnetic field proof.

How to order switch

SW - T0V

Switch model No.
(Item Ⓔ on page 352)

Note: Contact CKD when using an environment-friendly T switch.

Internal structure and parts list

● STG-M-32 to 63(ø32 to ø63)

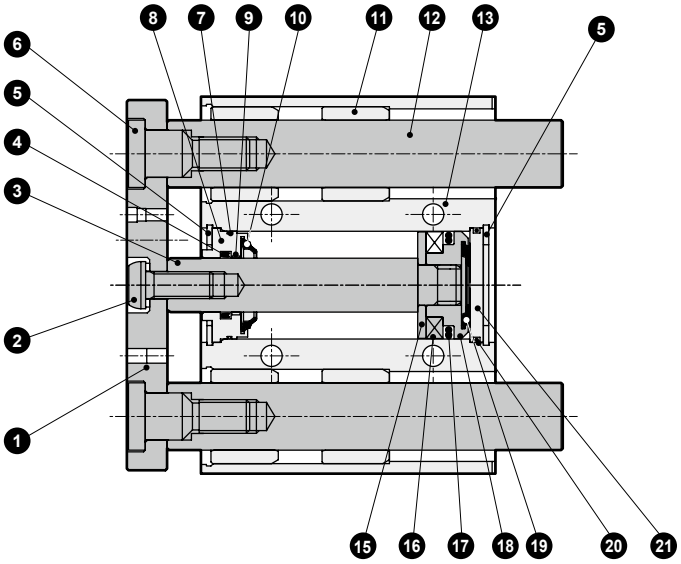

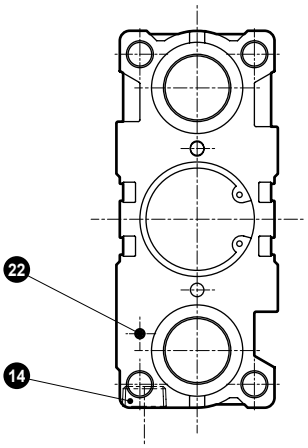

● STG-B-32 to 63(ø32 to ø63)

· 100 or less stroke length

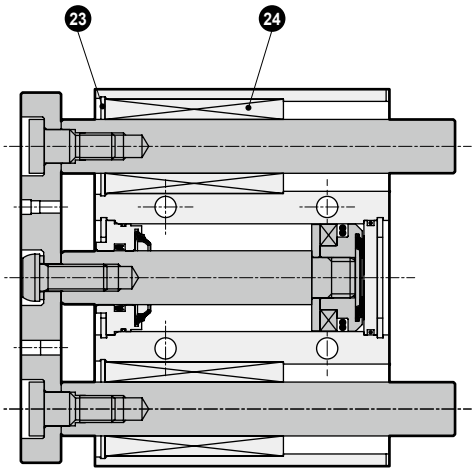

· Over 100 stroke length

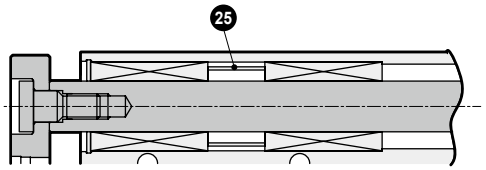

Internal structure and parts list

No.	Part name	Material	Remarks	No.	Part name	Material	Remarks
1	End plate	Steel	Nickeling	14	Plug	Steel	
2	Hexagon socket button head bolt	Alloy steel	Zinc chromate	15	Spacer	Aluminum alloy	Alumite
3	Piston rod	Steel	Industrial chrome plating	16	Magnet	Plastic	
4	Rod packing	Nitrile rubber		17	Piston packing	Nitrile rubber	
5	C type snap ring	Steel	Zinc phosphate	18	Piston	Aluminum alloy	Alumite
6	Bolt	Alloy steel	Zinc chromate	19	Rubber air cushion (H)	Special rubber	
7	Metal gasket	Nitrile rubber		20	O-ring	Nitrile rubber	
8	Rod metal	Aluminum alloy	Alumite	21	Base plate	Aluminum alloy	Alumite
9	Bush	Oiles drymet (ø40 to ø63)		22	Hexagon socket set screw	Stainless steel	
10	Rubber air cushion (R)	Special rubber		23	C type snap ring	Steel	Zinc phosphate
11	Metal	Oil-impregnated copper alloy bearing		24	Ball bushing		
12	Guide rod	Steel	Industrial chrome plating	25	Collar	Aluminum alloy	
13	Cylinder body	Aluminum alloy	Hard alumite				

Repair parts list

Bore size (mm)	Kit No. STG-M/B	Repair parts No.
ø32	STG-32CK	❹ ❼ ❿ ⓱ ⓳ ⓴
ø40	STG-40CK	
ø50	STG-50CK	
ø63	STG-63CK	

Dimensions

Same as STG Series (double acting/single rod). Refer to page 346.

LCM
LCR
LCG
LCW
LCX
STM
STG
STS/STL
STR2
UCA2
ULK*
JSK/M2
JSG
JSC3/JSC4
USSD
UFCD
USC
UB
JSB3
LMB
LML
HCM
HCA
LBC
CAC4
UCAC2
CAC-N
UCAC-N
RCS2
RCC2
PCC
SHC
MCP
GLC
MFC
BBS
RRC
GRC
RV3*
NHS
HRL
LN
Hand
Chuk
MecHnd/Chuk
ShkAbs
FJ
FK
SpdContr
Ending

Technical data

Refer to page 412 for guided cylinder selection guide.

[Comparison of collision noise level]

Values are comparison samples obtained under the conditions below.
As the values vary with base rigidity, etc., they are not guaranteed.

(Test conditions)

Cylinder	: STG
Mounting direction of cylinder	: Vertical with rod upward
Cylinder supply pressure	: 0.5 MPa
Measurement position of sound level meter	: 1 m from sample

Standard rubber cushion :
Rubber-air cushion :

ø 32

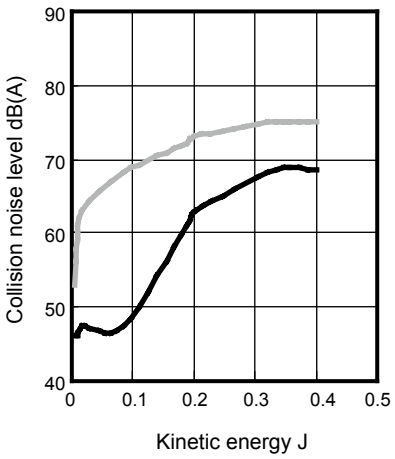

ø 40

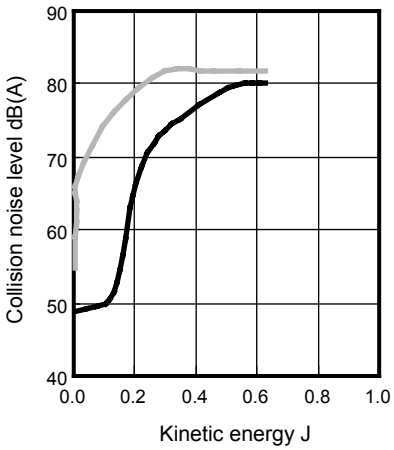

ø 50

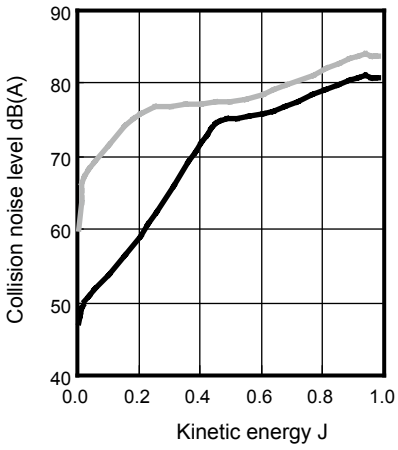

ø 63

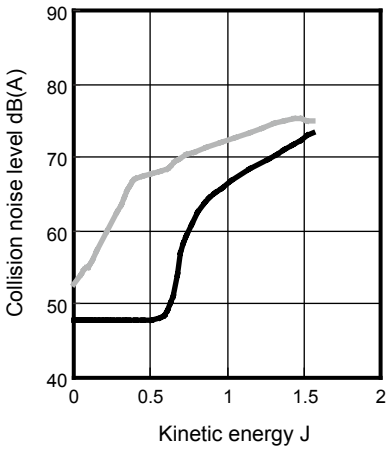

LCM
LCR
LCG
LCW
LCX
STM
STG
STS/STL
STR2
UCA2
ULK*
JSK/M2
JSG
JSC3/JSC4
USSD
UFCD
USC
UB
JSB3
LMB
LML
HCM
HCA
LBC
CAC4
UCAC2
CAC-N
UCAC-N
RCS2
RCC2
PCC
SHC
MCP
GLC
MFC
BBS
RRC
GRC
RV3*
NHS
HRL
LN
Hand
Chuk
MecHnd/Chuk
ShkAbs
FJ
FK
SpdContr
Ending

Technical data

[Comparison of collision acceleration]

Standard rubber cushion:
Rubber-air cushion :

ø 32

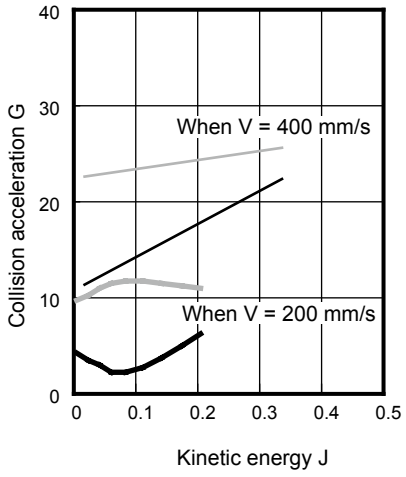

ø 40

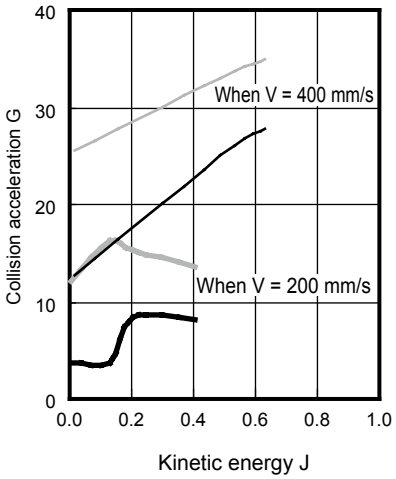

ø 50

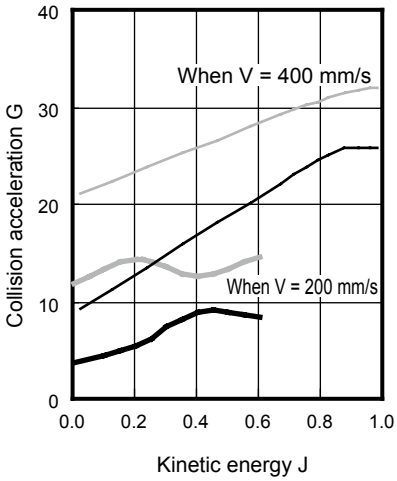

ø 63

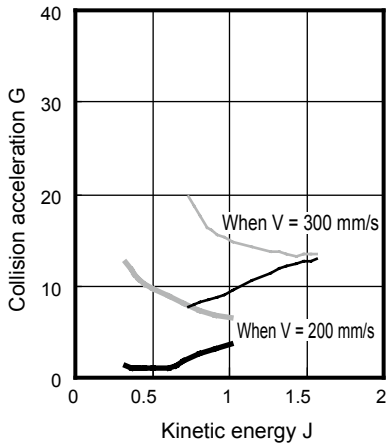

[Allowable energy value]

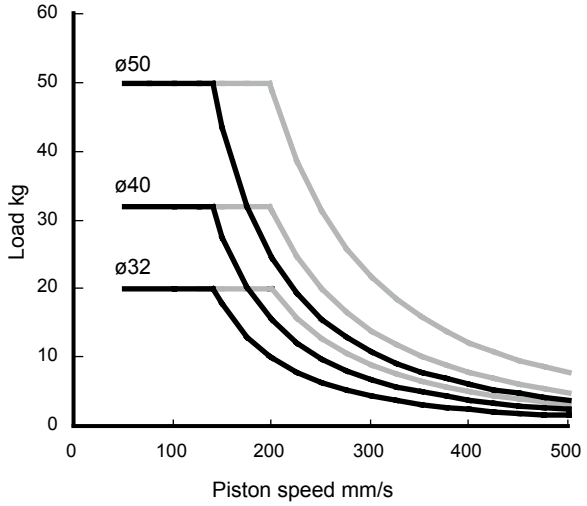

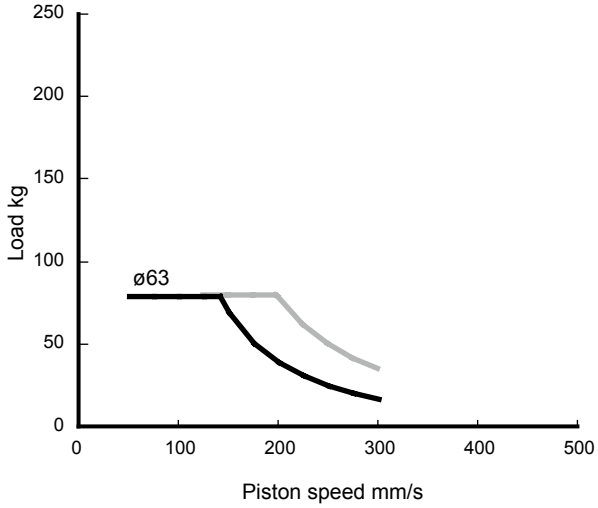

Usable in the range below and to the left of the curve.
Although it can be used in the range marked with ——, the use within the range marked with solid line is recommended to maximize the noise reduction effect.

Guided cylinder, double acting/air cushioned

STG-$^{M}_{B}$C Series

● Bore size: ø16/ø20/ø25/ø32/ø40/ø50/ø63

JIS symbol

Specifications

Item	STG-$^{M}_{B}$C						
Bore size mm	ø16	ø20	ø25	ø32	ø40	ø50	ø63
Actuation	Double acting/air cushioned						
Working fluid	Compressed air						
Max. working pressure MPa	1.0 (≈150 psi, 10 bar)						
Min. working pressure MPa	0.15 (≈22 psi, 1.5 bar)			0.1 (≈15 psi, 1 bar)			
Proof pressure MPa	1.6 (≈230 psi, 16 bar)						
Ambient temperature °C	-10 (14°F) to 60 (140°F) (no freezing)						
Port size	M5	Rc1/8				Rc1/4	
Stroke tolerance mm	$^{+2.0}_{0}$						
Working piston speed mm/s	50 to 500						50 to 300
Cushion	With air cushion						
Lubrication	Not required (use turbine oil class 1 ISO VG32 if necessary for lubrication)						
Allowable absorbed energy J	0.3	0.7	1.0	2.5	3.7	3.8	5.5

Stroke length

Bore size	Standard stroke length (mm)	Max. stroke length (mm)	Min. stroke length (mm)	Min. stroke (mm)(switch)
ø16	25/50/75/100/125/150/175/200/250	250	15 *2	15
ø20	25/50/75/100 125/150/175 200/250/300 350/400	400		
ø25				
ø32				
ø40				
ø50				
ø63				

*1: The custom stroke length is available in 1 mm increments. However, the total dimensions are the same as the longer standard stroke length. (Made to order)
*2: For min. stroke length and below, select the basic since there is no cushion effect.

Theoretical thrust table

(Unit: N)

Bore size (mm)	Operating direction	Working pressure MPa										
		0.1	0.15	0.2	0.3	0.4	0.5	0.6	0.7	0.8	0.9	1.0
ø16	Push	-	30.2	40.2	60.3	80.4	1.01×10^2	1.21×10^2	1.41×10^2	1.61×10^2	1.81×10^2	2.01×10^2
	Pull	-	22.6	30.2	45.2	60.3	75.4	90.5	1.06×10^2	1.21×10^2	1.36×10^2	1.51×10^2
ø20	Push	-	47.1	62.8	94.2	1.26×10^2	1.57×10^2	1.88×10^2	2.20×10^2	2.51×10^2	2.83×10^2	3.14×10^2
	Pull	-	35.3	47.1	70.7	94.2	1.18×10^2	1.41×10^2	1.65×10^2	1.88×10^2	2.12×10^2	2.36×10^2
ø25	Push	-	73.6	98.2	1.47×10^2	1.96×10^2	2.45×10^2	2.95×10^2	3.44×10^2	3.93×10^2	4.42×10^2	4.91×10^2
	Pull	-	56.7	75.6	1.13×10^2	1.51×10^2	1.89×10^2	2.27×10^2	2.64×10^2	3.02×10^2	3.40×10^2	3.78×10^2
ø32	Push	80.4	1.21×10^2	1.61×10^2	2.41×10^2	3.22×10^2	4.02×10^2	4.83×10^2	5.63×10^2	6.43×10^2	7.24×10^2	8.04×10^2
	Pull	60.3	90.5	1.21×10^2	1.81×10^2	2.41×10^2	3.02×10^2	3.62×10^2	4.22×10^2	4.83×10^2	5.43×10^2	6.03×10^2
ø40	Push	1.26×10^2	1.88×10^2	2.51×10^2	3.77×10^2	5.03×10^2	6.28×10^2	7.54×10^2	8.80×10^2	1.01×10^3	1.13×10^3	1.26×10^3
	Pull	1.06×10^2	1.58×10^2	2.11×10^2	3.17×10^2	4.22×10^2	5.28×10^2	6.33×10^2	7.39×10^2	8.44×10^2	9.50×10^2	1.06×10^3
ø50	Push	1.96×10^2	2.95×10^2	3.93×10^2	5.89×10^2	7.85×10^2	9.82×10^2	1.18×10^3	1.37×10^3	1.57×10^3	1.77×10^3	1.96×10^3
	Pull	1.65×10^2	2.47×10^2	3.30×10^2	4.95×10^2	6.60×10^2	8.25×10^2	9.90×10^2	1.15×10^3	1.32×10^3	1.48×10^3	1.65×10^3
ø63	Push	3.12×10^2	4.68×10^2	6.23×10^2	9.35×10^2	1.25×10^3	1.56×10^3	1.87×10^3	2.18×10^3	2.49×10^3	2.81×10^3	3.12×10^3
	Pull	2.80×10^2	4.20×10^2	5.61×10^2	8.41×10^2	1.12×10^3	1.40×10^3	1.68×10^3	1.96×10^3	2.24×10^3	2.52×10^3	2.80×10^3

LCM
LCR
LCG
LCW
LCX
STM
STG
STS/STL
STR2
UCA2
ULK*
JSK/M2
JSG
JSC3/JSC4
USSD
UFCD
USC
UB
JSB3
LMB
LML
HCM
HCA
LBC
CAC4
UCAC2
CAC-N
UCAC-N
RCS2
RCC2
PCC
SHC
MCP
GLC
MFC
BBS
RRC
GRC
RV3*
NHS
HRL
LN
Hand
Chuk
MecHnd/Chuk
ShkAbs
FJ
FK
SpdContr
Ending

Switch specifications

● 1-color/2-color display/for AC magnetic field proof

Item	Proximity 2-wire	Proximity 2-wire			Proximity 3-wire				Reed 2-wire							Proximity 2-wire
	T1H/ T1V	T2H/T2V/ T2JH/T2JV	T2YH/ T2YV	T2WH/ T2WV	T3H/ T3V	T3PH/ T3PV	T3YH/ T3YV	T3WH/ T3WV	T0H/T0V		T5H/T5V		T8H/T8V			T2YD(*4) T2YDT
Applications	For programmable controller, relay, compact solenoid valve	Dedicated for programmable controller			For programmable controller, relay				For programmable controller, relay		For programmable controller, relay, IC circuit (no indicator lamp), serial connection		For programmable controller, relay			For programmable controller
Output method	-				NPN output	PNP output	NPN output	NPN output	-							
Pwr. supp. V.	-				10 to 28 VDC				-							
Load voltage	85 to 265 VAC	10 to 30 VDC		24 VDC ±10%	30 VDC or less				12/24 VDC	100/110 VAC	5/12/24 VDC	100/110 VAC	12/24 VDC	110 VAC	220 VAC	24 VDC ±10%
Load current	5 to 100 mA	5 to 20 mA (*3)			100 mA or less		50 mA or less		5 to 50 mA	7 to 20 mA	≤50 mA	≤20 mA	5 to 50 mA	7 to 20 mA	7 to 10 mA	5 to 20 mA
Indicator lamp	LED (Lit when ON)	LED (Lit when ON)	Red/green LED (Lit when ON)	Red/green LED (Lit when ON)	LED (Lit when ON)	Yellow LED (Lit when ON)	Red/green LED (Lit when ON)	Red/green LED (Lit when ON)	LED (Lit when ON)		Without indicator lamp		LED (Lit when ON)			Red/green LED (Lit when ON)
Leakage current	≤1 mA at 100 VAC, ≤2 mA at 200 VAC	1 mA or less			10 μA or less				0 mA							1 mA or less
Weight g	1 m:33 3 m:87 5 m:142	1 m:18 3 m:49 5 m:80	1 m:33 3 m:87 5 m:142	1 m:18 3 m:49 5 m:80	1 m:18 3 m:49 5 m:80		1 m:33 3 m:87 5 m:142	1 m:18 3 m:49 5 m:80	1 m:18 3 m:49 5 m:80				1 m:33 3 m:87 5 m:142			1 m:61 3 m:166 5 m:272

*1 : Refer to Ending Page 1 for detailed switch specifications and dimensions.
*2 : Switches other than the above models, such as switches with connectors, are also available. Refer to Ending Page 1.
*3 : The max. load current is 20 mA at 25°C. The current is lower than 20 mA if the operating ambient temperature around the switch is higher than 25°C. (5 to 10 mA at 60°C)
*4 : AC magnetic field proof switch (T2YD/T2YDT) cannot be used in DC magnetic fields.

Cylinder weight

● STG-M

Unit: kg

Item / Bore size (mm)	Stroke length 25	50	75	100	125	150	175	200	250	300	350	400	Switch weight
ø16	0.49	0.61	0.76	0.88	1.04	1.16	1.28	1.41	1.65				Refer to the weight in the switch specifications.
ø20	0.85	1.04	1.30	1.49	1.68	1.87	2.06	2.26	2.71	3.10	3.48	3.87	
ø25	1.19	1.45	1.83	2.09	2.35	2.62	2.89	3.15	3.80	4.32	4.86	5.38	
ø32	1.90	2.26	2.80	3.18	3.58	3.96	4.35	4.73	5.71	6.48	7.26	8.03	
ø40	2.28	2.70	3.16	3.58	4.01	4.43	4.86	5.28	6.31	7.17	8.02	8.87	
ø50	3.87	4.51	5.24	5.88	6.51	7.15	7.79	8.43	10.04	11.30	12.60	13.90	
ø63	4.93	5.69	6.53	7.29	8.04	8.80	9.55	10.31	12.15	13.65	15.15	16.64	

● STG-B

Unit: kg

Item / Bore size (mm)	Stroke length 25	50	75	100	125	150	175	200	250	300	350	400	Switch weight
ø16	0.52	0.64	0.75	0.87	1.00	1.11	1.22	1.34	1.55				Refer to the weight in the switch specifications.
ø20	0.90	1.10	1.27	1.43	1.63	1.80	1.97	2.14	2.50	2.84	3.18	3.52	
ø25	1.26	1.52	1.75	1.98	2.24	2.46	2.69	2.91	3.40	3.85	4.30	4.74	
ø32	1.75	2.04	2.47	2.77	3.13	3.43	3.72	4.02	4.68	5.27	5.87	6.46	
ø40	2.12	2.48	2.97	3.33	3.75	4.11	4.47	4.83	5.61	6.32	7.04	7.76	
ø50	3.62	4.17	4.92	5.47	6.10	6.65	7.20	7.75	8.98	10.07	11.20	12.30	
ø63	4.69	5.34	6.21	6.87	7.63	8.29	8.96	9.62	11.05	12.45	13.75	15.05	

LCM
LCR
LCG
LCW
LCX
STM
STG
STS/STL
STR2
UCA2
ULK*
JSK/M2
JSG
JSC3/JSC4
USSD
UFCD
USC
UB
JSB3
LMB
LML
HCM
HCA
LBC
CAC4
UCAC2
CAC-N
UCAC-N
RCS2
RCC2
PCC
SHC
MCP
GLC
MFC
BBS
RRC
GRC
RV3*
NHS
HRL
LN
Hand
Chuk
MecHnd/Chuk
ShkAbs
FJ
FK
SpdContr
Ending

How to order

Without switch (built-in magnet for switch)

STG - M C - 32 ◯ - 25

With switch (built-in magnet for switch)

STG - M C - 32 ◯ - 25 - T2H - R

Model No. | With air cushion | Ⓐ Bearing | Ⓑ Bore size | Ⓒ Port thread | Ⓓ Stroke length | Ⓔ Switch model No. *1, *2 | Ⓕ Switch quantity

Code	Description
Ⓐ Bearing	
M	Metal bush bearing
B	Ball bearing
Ⓑ Bore size (mm)	
16	ø16
20	ø20
25	ø25
32	ø32
40	ø40
50	ø50
63	ø63
Ⓒ Port thread	
Blank	M5(ø16)
	Rc thread (ø20 to ø63)
NN	NPT thread (ø20 or more) made-to-order product
GN	G thread (ø20 or more) made-to-order product
Ⓓ Stroke length (mm)	
Refer to the stroke length table on the following page	

Ⓔ Switch model No.

Axial lead wire	Radial lead wire	Contact	Voltage AC	Voltage DC	Display	Lead wire
TOH*	**T0V***	Reed	●	●	1-color display	2-wire
T5H*	**T5V***		●	●	Without indicator lamp	
T8H*	**T8V***		●	●	1-color display	
T1H*	**T1V***	Proximity	●		1-color display	2-wire
T2H*	**T2V***			●		
T3H*	**T3V***			●		3-wire
T3PH*	**T3PV***			●	1-color display	3-wire
T2WH*	**T2WV***			●	2-color display	2-wire
T2YH*	**T2YV***			●		
T3WH*	**T3WV***			●		3-wire
T3YH*	**T3YV***			●		
T2JH*	**T2JV***			●	1-color display off-delay	2-wire
T2YD*	**-**			●	2-color display for AC magnetic field	2-wire
T2YDT*	**-**			●		

* Lead wire length	
Blank	1 m (standard)
3	3 m (option)
5	5 m (option)

Ⓕ Switch quantity	
R	1 on rod side
H	1 on head side
D	2
T	3

⚠ Precautions for model No. selection

*1 : Switches other than Ⓔ Switch model No. are also available. (Made-to-order product) Refer to Ending Page 1 for details.
*2 : Switches are shipped with the product. Contact CKD if assembling before shipment is necessary.
*3 : T8H/V switch cannot be installed on STG-$^{M}_{B}$C-16.

[Example of model No.]

STG-MC-25-50-T0H3-D

Model: Guided cylinder, double acting/air cushioned

Ⓐ Bearing : Metal bush bearing
Ⓑ Bore size : ø25 mm
Ⓒ Port thread : Rc thread
Ⓓ Stroke length : 50 mm
Ⓔ Switch model No. : Reed T0H switch, lead wire length 3 m
Ⓕ Switch quantity : 2

Ⓓ Stroke length

Stroke length (mm)		Applicable bore size						
		ø16	ø20	ø25	ø32	ø40	ø50	ø63
Standard stroke length	25	●	●	●	●	●	●	●
	50	●	●	●	●	●	●	●
	75	●	●	●	●	●	●	●
	100	●	●	●	●	●	●	●
	125	●	●	●	●	●	●	●
	150	●	●	●	●	●	●	●
	175	●	●	●	●	●	●	●
	200	●	●	●	●	●	●	●
	250	●	●	●	●	●	●	●
	300		●	●	●	●	●	●
	350		●	●	●	●	●	●
	400		●	●	●	●	●	●
Min. stroke length *1		15						
Custom stroke length *2		In 1 mm increments (made to order)						

*1: For min. stroke length and below, select the basic since there is no cushion effect.
*2: The total dimensions are the same as the longer standard stroke length.

How to order switch

SW - T0V

Switch model No.
(Item Ⓔ on page 360)

Note: Contact CKD when using
an environment-friendly T switch.

LCM
LCR
LCG
LCW
LCX
STM
STG
STS/STL
STR2
UCA2
ULK*
JSK/M2
JSG
JSC3/JSC4
USSD
UFCD
USC
UB
JSB3
LMB
LML
HCM
HCA
LBC
CAC4
UCAC2
CAC-N
UCAC-N
RCS2
RCC2
PCC
SHC
MCP
GLC
MFC
BBS
RRC
GRC
RV3*
NHS
HRL
LN
Hand
Chuk
MecHnd/Chuk
ShkAbs
FJ
FK
SpdContr
Ending

Internal structure and parts list (STG-MC-16 to 40)

● ø16

· 25 stroke length

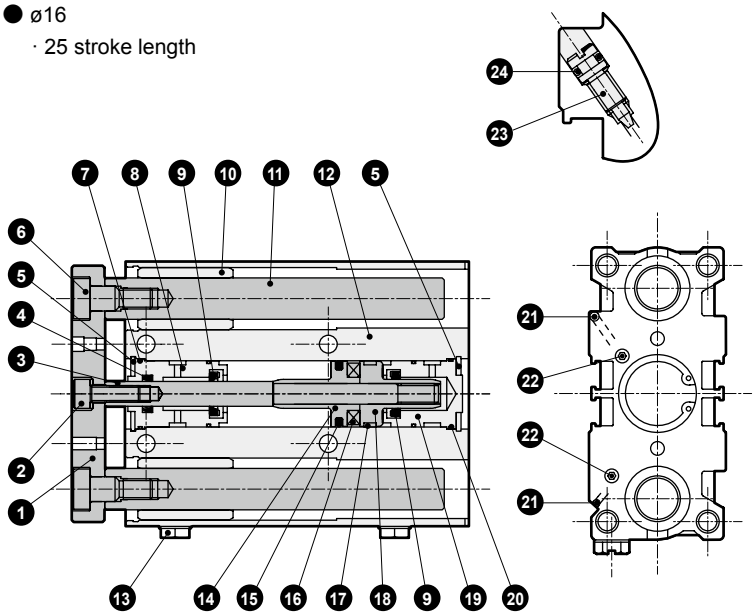

· Over 25 to 100 stroke length

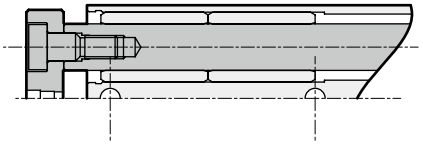

· Over 100 stroke length

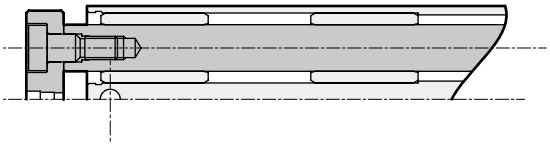

● ø20 to ø40

· 25 stroke length (ø20, ø25)

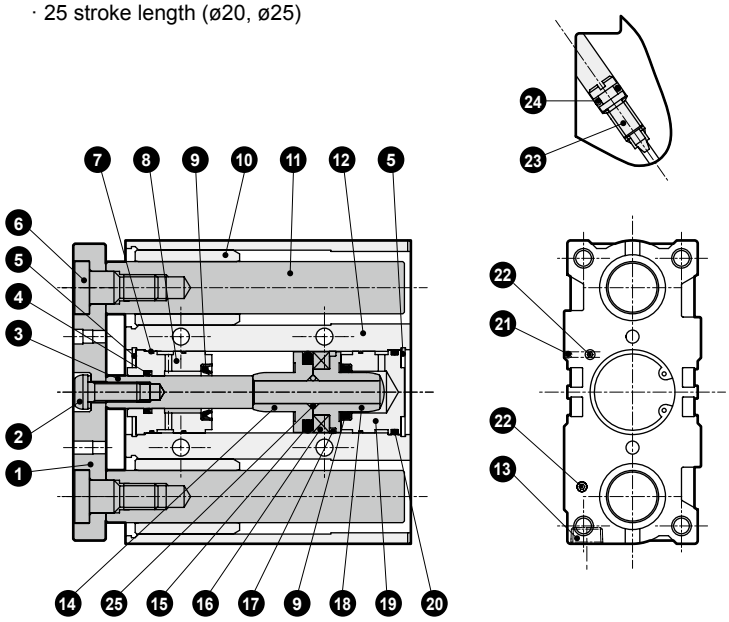

· Over 25 to 200 stroke length (ø20, ø25)

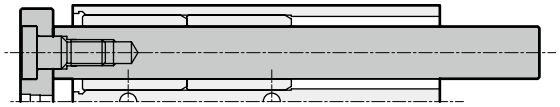

· Over 200 stroke length (ø20, ø25, ø32, ø40)

Internal structure and parts list (STG-MC-50, 63)

● ø50, ø63

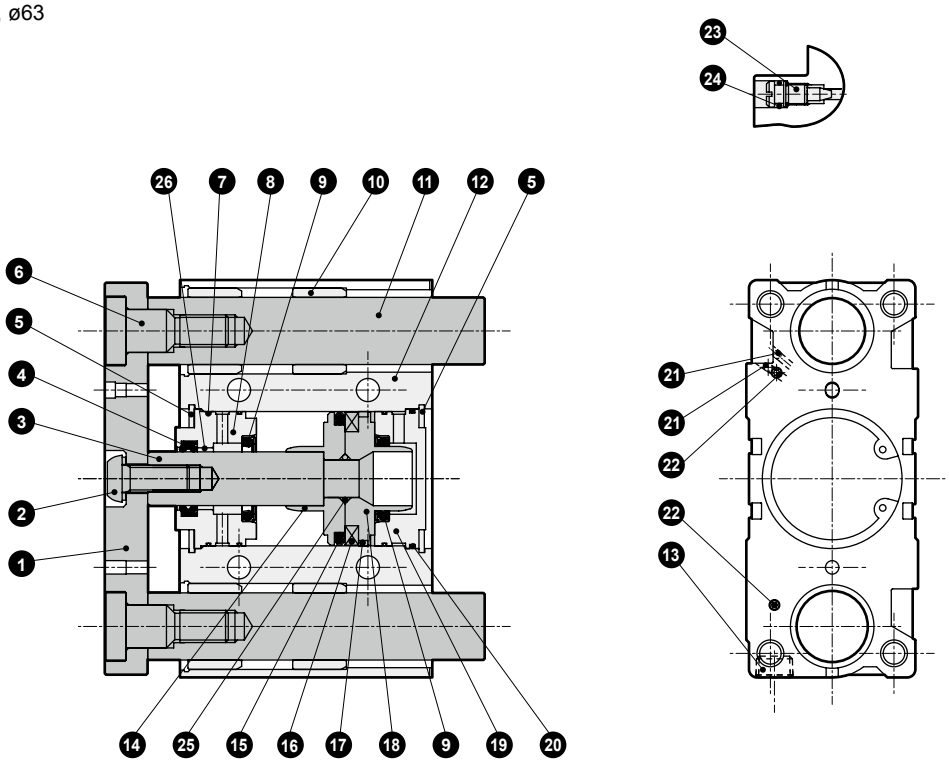

No.	Part name	Material	Remarks	No.	Part name	Material	Remarks
1	End plate	Steel	Nickeling	12	Cylinder body	Aluminum alloy	Hard alumite
2	Hexagon socket head cap screw (ø16)	Steel	Zinc chromate	13	Plug	Copper alloy or steel	
	Hex socket button head bolt (ø20 to ø63)	Steel	Zinc chromate	14	Piston (R)	Aluminum alloy	Chromate (ø16 to ø32)
3	Piston rod	Stainless steel (ø16 to ø25)	Industrial chrome plating	15	Piston packing	Nitrile rubber	
		Steel (ø32 to ø63)	Industrial chrome plating	16	Magnet	Plastic	
4	Rod packing	Nitrile rubber		17	Wear ring	Acetal resin	
5	C type snap ring	Steel	Zinc phosphate	18	Piston (H)	Aluminum alloy	Chromate (ø16 to ø32)
6	Bolt	Steel	Zinc chromate	19	Base plate	Aluminum alloy	Chromate
7	Metal gasket	Nitrile rubber		20	O-ring	Nitrile rubber	
8	Rod metal	Special aluminum alloy (ø16 to ø32)	Alumite	21	Steel ball	Stainless steel	
		Aluminum alloy (ø40 to ø63)	Chromate	22	Hexagon socket set screw	Stainless steel	
9	Cushion packing	Nitrile rubber/steel		23	Cushion needle	Copper alloy	
10	Metal	Oil impregnated bearing alloy		24	Needle gasket	Nitrile rubber	
11	Guide rod	Stainless steel (ø16)	Industrial chrome plating	25	Piston gasket	Nitrile rubber	
		Steel (ø20 to ø63)	Industrial chrome plating	26	Bush	Oiles drymet (ø40 to ø63)	

Repair parts list

Bore size (mm)	Kit No. STG-M/B	Repair parts No.
ø16	STG-C-16K	4 7 9 15 17 20 24
ø20	STG-C-20K	
ø25	STG-C-25K	
ø32	STG-C-32K	
ø40	STG-C-40K	
ø50	STG-C-50K	
ø63	STG-C-63K	

Note: For support of new and old products, both sizes are available for 20 O-rings of ø20 to ø50.
For complete replacement, note that 2 will be left over.

LCM
LCR
LCG
LCW
LCX
STM
STG
STS/STL
STR2
UCA2
ULK*
JSK/M2
JSG
JSC3/JSC4
USSD
UFCD
USC
UB
JSB3
LMB
LML
HCM
HCA
LBC
CAC4
UCAC2
CAC-N
UCAC-N
RCS2
RCC2
PCC
SHC
MCP
GLC
MFC
BBS
RRC
GRC
RV3*
NHS
HRL
LN
Hand
Chuk
MecHnd/Chuk
ShkAbs
FJ
FK
SpdContr
Ending

Internal structure and parts list (STG-BC-16 to 40)

● ø16

· Over 25 to 100 stroke length

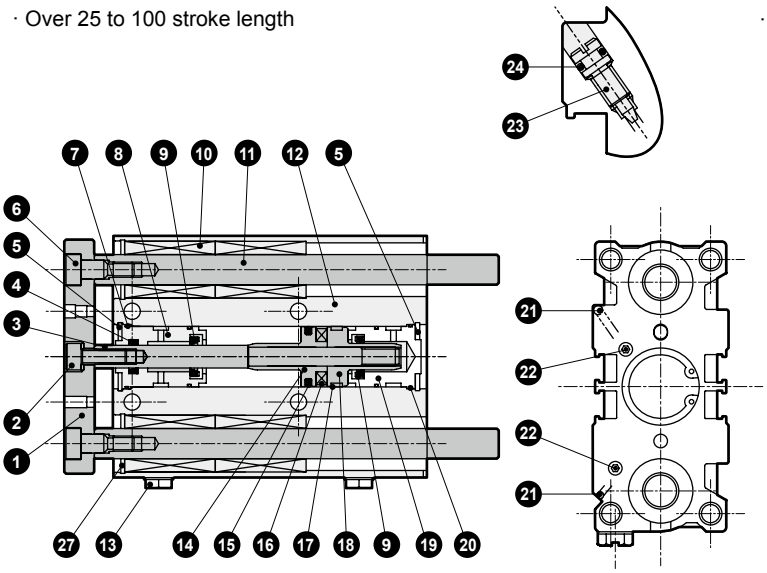

· Over 100 stroke length

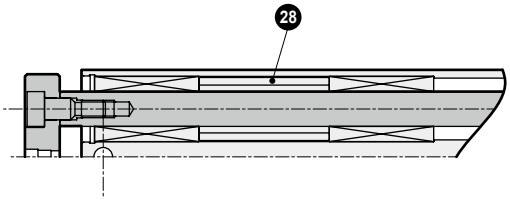

● ø20 to ø40

· 25 stroke length (ø20, ø25)

· 100 mm stroke length or less (ø32, ø40)

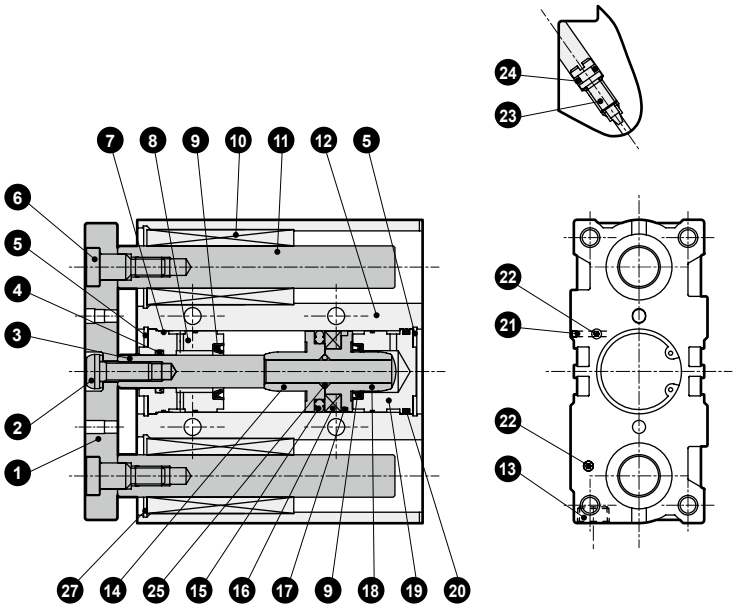

· Over 25 to 100 stroke length (ø20)

· Over 25 to 75 stroke length (ø25)

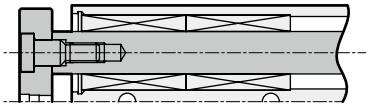

· Over 100 stroke length (ø20)

· Over 75 stroke length (ø25)

· Over 100 stroke length (ø32, ø40)

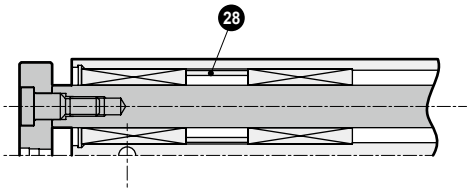

Internal structure and parts list (STG-BC-50, 63)

● ø50, ø63

· 75 or less stroke length

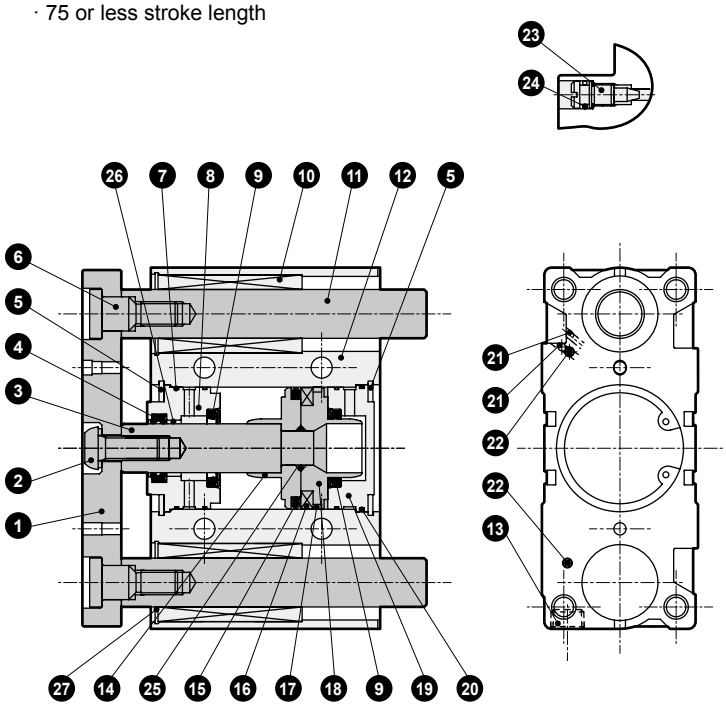

· Over 75 stroke length

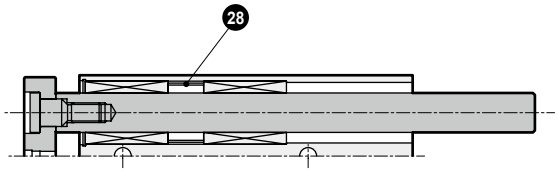

No.	Part name	Material	Remarks	No.	Part name	Material	Remarks
1	End plate	Steel	Nickeling	14	Piston (R)	Aluminum alloy	Chromate (ø16 to ø32)
2	Hex socket head cap screw (ø12 to ø16)	Steel	Zinc chromate	15	Piston packing	Nitrile rubber	
	Hex socket button head bolt (ø20 to ø63)	Steel	Zinc chromate	16	Magnet		
3	Piston rod	Stainless steel (ø16 to ø25)	Industrial chrome plating	17	Wear ring	Acetal resin	
		Steel (ø32 to ø63)	Industrial chrome plating	18	Piston (H)	Aluminum alloy	Chromate (ø16 to ø32)
4	Rod packing	Nitrile rubber		19	Base plate	Aluminum alloy	Chromate
5	C type snap ring	Steel	Zinc phosphate	20	O-ring	Nitrile rubber	
6	Bolt	Steel	Zinc chromate	21	Steel ball	Stainless steel	
7	Metal gasket	Nitrile rubber		22	Hexagon socket set screw	Stainless steel	
8	Rod metal	Special aluminum alloy (ø16 to ø32)	Alumite	23	Cushion needle	Copper alloy	
		Aluminum alloy (ø40 to ø63)	Chromate	24	Needle gasket	Nitrile rubber	
9	Cushion packing	Nitrile rubber/steel		25	Piston gasket	Nitrile rubber	
10	Ball bushing			26	Bush	Oiles drymet (ø40 to ø63)	
11	Guide rod	Steel	Industrial chrome plating	27	C type snap ring	Steel	Zinc phosphate
12	Cylinder body	Aluminum alloy	Hard alumite	28	Collar	Aluminum alloy	
13	Plug	Copper alloy or steel					

Repair parts list

Bore size (mm)	Kit No. STG-M/B	Repair parts No.
ø16	STG-C-16K	4 7 9 15 17 20 24
ø20	STG-C-20K	
ø25	STG-C-25K	
ø32	STG-C-32K	
ø40	STG-C-40K	
ø50	STG-C-50K	
ø63	STG-C-63K	

Note: For support of new and old products, both sizes are available for 20 O-rings of ø20 to ø50.
For complete replacement, note that 2 will be left over.

LCM
LCR
LCG
LCW
LCX
STM
STG
STS/STL
STR2
UCA2
ULK*
JSK/M2
JSG
JSC3/JSC4
USSD
UFCD
USC
UB
JSB3
LMB
LML
HCM
HCA
LBC
CAC4
UCAC2
CAC-N
UCAC-N
RCS2
RCC2
PCC
SHC
MCP
GLC
MFC
BBS
RRC
GRC
RV3*
NHS
HRL
LN
Hand
Chuk
MecHnd/Chuk
ShkAbs
FJ
FK
SpdContr
Ending

Dimensions (ø16, ø20, ø25)

CAD

● STG-$^{M}_{B}$C-16, 20, 25

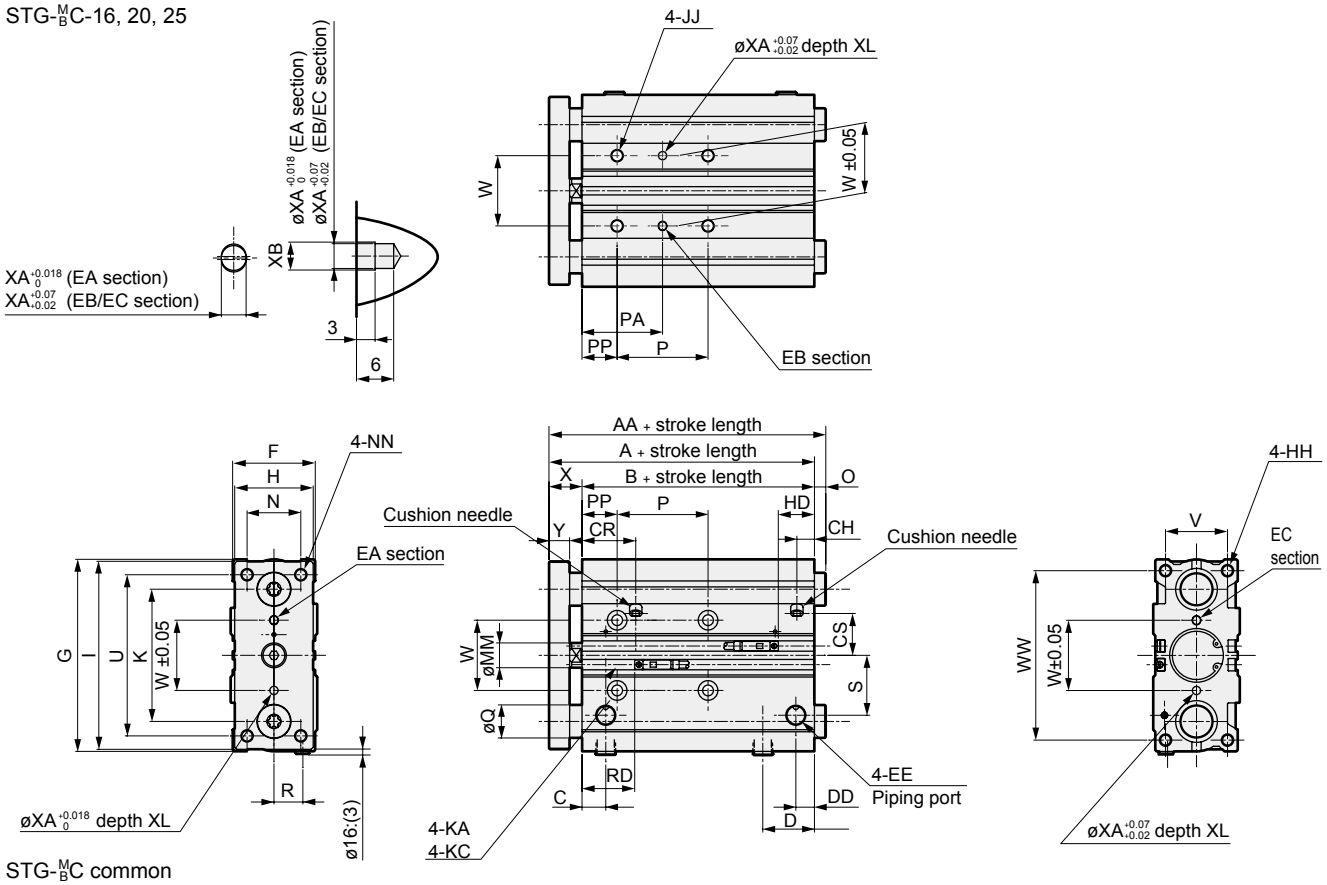

● STG-$^{M}_{B}$C common

Code / Bore size (mm)	Standard stroke length (mm)	A	B	C	D	DD	EE	F	G	H	HH	I	JJ	K	KA
ø16	25,50,75,100,125,150,175,200,250	71	58	12	18	7.5	M5	30	64	25	M5 depth 12	62	M5 depth 10	46	4.3 through
ø20	25,50,75,100,125,150	78	62	10.5	24.5	8.5	Rc1/8	36	83	30	M5 depth 13	81	M6 depth 12	54	5.2 through
ø25	175,200,250,300,350,400	78.5	62.5	11.5	25	9	Rc1/8	42	93	38	M6 depth 15	91	M6 depth 12	64	5.2 through

Code / Bore size (mm)	MM	N	NN	KC	P				PA				PP	R	S
					75 st or less	Over 75 st to 175 st	>175 st, ≤250 st	>250 st, ≤400 st	75 st or less	Over 75 st to 175 st	>175 st, ≤250 st	>250 st, ≤400 st			
ø16	6	16	M5 through	8 spot face depth 4.5	44	110	200	-	27	60	105	-	5	10	18
ø20	8	18	M5 through	9.5 spot face depth 5.5	44	120	200	300	39	77	117	167	17	11	25
ø25	10	26	M6 through	9.5 spot face depth 5.5	44	120	200	300	39	77	117	167	17	14	29

Code / Bore size (mm)	U	V	W	WW	X	Y	T0/T5/T2/T3		T2W/T3W		XA	XB	CR	CH	CS
							RD	HD	RD	HD					
ø16	54	22	24	56	13 0 -1.5	7.5	20.5	18	22.5	20	3	3.5	23.5	9	16
ø20	70	24	28	72	16 0 -2	9.5	23.5	19.5	25.5	21.5	3	3.5	25	11	19
ø25	78	30	34	82	16 0 -2	9.5	25.5	17.5	27.5	19.5	4	4.5	26	8.5	20

● STG-MC

Code / Bore size (mm)	AA					Q	O				
	25 st or less	Over 25 st to 50 st	Over 50 st to 100 st	>100 st, ≤200 st	Over 200 st		25 st or less	Over 25 st to 50 st	Over 50 st to 100 st	>100 st, ≤200 st	Over 200 st
ø16	71	88	71	95	95	10	0	17	0	24	24
ø20	78	84.5	79	79	122	12	0	6.5	1	1	44
ø25	78.5	84	84	84	122	16	0	5.5	5.5	5.5	43.5

● STG-BC

Code / Bore size (mm)	AA					Q	O				
	25 st or less	Over 25 st to 75 st	100st	>100 st, ≤200 st	Over 200 st		25 st or less	Over 25 st to 75 st	100st	>100 st, ≤200 st	Over 200 st
ø16	80	71	71	95	95	8	9	0	0	24	24
ø20	93	79	79	100	122	10	15	1	1	22	44
ø25	99	84	103	103	122	13	20.5	5.5	24.5	24.5	43.5

*1: Refer to page 410 for RD, HD and protruding dimensions of the 2-color display (except for T2WH/V and T3WH/V), off-delay, AC magnetic field proof, T1H/V and T8H/V switches.

Dimensions (ø32, ø40, ø50, ø63)

CAD

● STG-$^{M}_{B}$C-32, 40, 50, 63

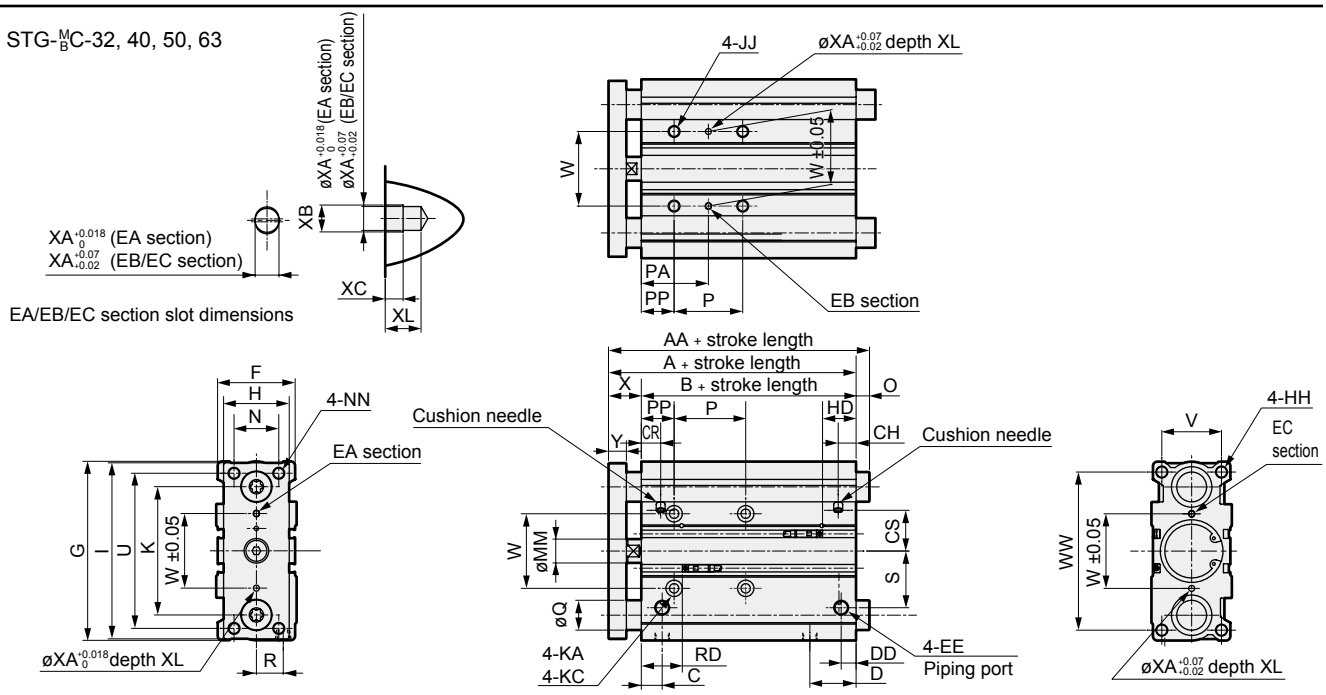

● STG-$^{M}_{B}$C common

Code / Bore size (mm)	Standard stroke length (mm)	A	B	C	D	DD	EE	F	G	H	HH	I	JJ	K	KA
ø32	25,50,75,100,125, 150,175,200,250, 300,350,400	84.5	62.5	12.5	30.5	9	Rc1/8	48	112	44	M8 depth 20	110	M8 depth 16	78	6.3 through
ø40		91	69	14	31	10	Rc1/8	54	120	44	M8 depth 20	118	M8 depth 16	86	6.3 through
ø50		97	69	14	35	11	Rc1/4	64	148	60	M10 depth 22	146	M10 depth 20	110	8.6 through
ø63		102	74	16.5	35	15	Rc1/4	78	162	70	M10 depth 22	158	M10 depth 20	124	8.6 through

Code / Bore size (mm)	KC	MM	N	NN	P				PA				PP	R	S	U
					75 st or less	Over 75 st to 175 st	>175 st, ≤250 st	Over 250 st	75 st or less	Over 75 st to 175 st	>175 st, ≤250 st	Over 250 st				
ø32	11 spot face depth 7.5	12	30	M8 through	48	124	200	300	45	83	121	171	21	15	34	96
ø40	11 spot face depth 7.5	16	30	M8 through	48	124	200	300	46	84	122	172	22	18	38	104
ø50	14 spot face depth 9	20	40	M10 through	48	124	200	300	48	86	124	174	24	21.5	47	130
ø63	14 spot face depth 9	20	50	M10 through	52	128	200	300	50	88	124	174	24	28	55	130

Code / Bore size (mm)	V	W	WW	X	Y	T0/T5/T2/T3		T2W/T3W		XA	XB	XC	XL	CR	CH	CS
						RD	HD	RD	HD							
ø32	34	42	98	22$^{0}_{-2}$	11.5	23.5	20	25.5	22	4	4.5	3	6	12.5	9.2	25
ø40	40	50	106	22$^{0}_{-2}$	11.5	27.5	22.5	29.5	24.5	4	4.5	3	6	13	12	27.5
ø50	46	66	130	28$^{0}_{-2}$	15.5	30	20.5	32	22.5	5	6	4	8	15	12.5	39.5
ø63	58	80	142	28$^{0}_{-2}$	15.5	31	24	33	26	5	6	4	8	32.5	31.5	45.5

● STG-MC

Code / Bore size (mm)	AA				Q	O			
	25st	50st	Over 50 st to 200 st	Over 200 st		25st	50st	Over 50 st to 200 st	Over 200 st
ø32	84.5	125	100	140	20	0	40.5	15.5	55.5
ø40	91	125	100	140	20	0	34	9	49
ø50	97	116	116	161	25	0	19	19	64
ø63	102	116	116	161	25	0	14	14	59

*1: Refer to page 410 for RD, HD and protruding dimensions of the 2-color display (except for T2WH/V and T3WH/V), off-delay, AC magnetic field proof, T1H/V and T8H/V switches.

● STG-BC

Code / Bore size (mm)	AA						Q	O					
	25st	50st	75st	100st	>100 st, ≤200 st	Over 200 st		25st	50st	75st	100st	>100 st, ≤200 st	Over 200 st
ø32	84.5	123	98	98	118	140	16	0	38.5	13.5	13.5	33.5	55.5
ø40	91	123	98	98	118	140	16	0	32	7	7	27	49
ø50	97	114	114	159	134	161	20	0	17	17	62	37	64
ø63	102	114	114	159	134	161	20	0	12	12	57	32	59

Guided cylinder, double acting/position locking

STG-$^{M}_{B}$Q Series

● Bore size:ø20/ø25/ø32/ø40/ø50/ø63

JIS symbol

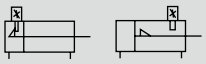

Specifications

Item	STG-M/BQ					
Bore size mm	ø20	ø25	ø32	ø40	ø50	ø63
Actuation	Double acting/position locking					
Working fluid	Compressed air					
Max. working pressure MPa	1.0 (≈150 psi, 10 bar)					
Min. working pressure MPa	0.2 (≈29 psi, 2 bar)		0.15 (≈22 psi, 1.5 bar)			
Proof pressure MPa	1.6 (≈230 psi, 16 bar)					
Ambient temperature °C	-10 (14°F) to 60 (140°F) (no freezing)					
Port size	Rc1/8				Rc1/4	
Stroke tolerance mm	+2.0 0					
Working piston speed mm/s	50 to 500					50 to 300
Cushion	With rubber cushion					
Position locking mechanism	Rod side or head side					
Holding force	Max. thrust x 0.7					
Lubrication	Not required (use turbine oil class 1 ISO VG32 if necessary for lubrication)					
Allowable absorbed energy J	0.157	0.157	0.401	0.627	0.980	1.560

Stroke length

Bore size	Standard stroke length (mm)	Max. stroke length (mm)	Min. stroke length (mm)	Min. stroke (mm)(switch)
ø20	25/50/75/100 125/150/175 200/250/300 350/400	400	5	Refer to Table 1
ø25				
ø32				
ø40				
ø50				
ø63				

*1: The custom stroke length is available in 5 mm increments. However, the total length is the same as that of the next longer standard stroke length.

Table 1

	1-color display (excluding T1) T0/T5/T2/T3/T3P	2-color display, strong magnetic field proof T1/T$^{2}_{3}$Y/T2J/T2YD/T2YDT
Axial lead wire T*H	20	30
Radial lead wire T*V	5	15

*2: For types with one or two switches.

⚠ Be sure to read the “Safety precautions” (Position locking) on pages 426 to 428 before use.

LCM
LCR
LCG
LCW
LCX
STM
STG
STS/STL
STR2
UCA2
ULK*
JSK/M2
JSG
JSC3/JSC4
USSD
UFCD
USC
UB
JSB3
LMB
LML
HCM
HCA
LBC
CAC4
UCAC2
CAC-N
UCAC-N
RCS2
RCC2
PCC
SHC
MCP
GLC
MFC
BBS
RRC
GRC
RV3*
NHS
HRL
LN
Hand
Chuk
MecHnd/Chuk
ShkAbs
FJ
FK
SpdContr
Ending

Switch specifications

● 1-color/2-color display/for AC magnetic field proof

Item	Proximity 2-wire	Proximity 2-wire			Proximity 3-wire				Reed 2-wire							Proximity 2-wire
	T1H/ T1V	T2H/T2V/ T2JH/T2JV	T2YH/ T2YV	T2WH/ T2WV	T3H/ T3V	T3PH/ T3PV	T3YH/ T3YV	T3WH/ T3WV	T0H/T0V		T5H/T5V		T8H/T8V			T2YD(*4) T2YDT
Applications	For programmable controller, relay, compact solenoid valve	Dedicated for programmable controller			For programmable controller, relay				For programmable controller, relay		For program controller, relay, IC circuit (no indicator lamp), serial connection		For programmable controller, relay			For programmable controller
Output method	-				NPN output	PNP output	NPN output	NPN output	-							
Pwr. supp. V.	-				10 to 28 VDC				-							
Load voltage	85 to 265 VAC	10 to 30 VDC		24 VDC ±10%	30 VDC or less				12/24 VDC	100/110 VAC	5/12/24 VDC	100/110 VAC	12/24 VDC	110 VAC	220 VAC	24 VDC ±10%
Load current	5 to 100 mA	5 to 20 mA (*3)			100 mA or less		50 mA or less		5 to 50 mA	7 to 20 mA	≤50 mA	≤20 mA	5 to 50 mA	7 to 20 mA	7 to 10 mA	5 to 20 mA
Indicator lamp	LED (Lit when ON)	LED (Lit when ON)	Red/green LED (Lit when ON)	Red/green LED (Lit when ON)	LED (Lit when ON)	Yellow LED (Lit when ON)	Red/green LED (Lit when ON)	Red/green LED (Lit when ON)	LED (Lit when ON)		Without indicator lamp		LED (Lit when ON)			Red/green LED (Lit when ON)
Leakage current	≤1 mA at 100 VAC, ≤2 mA at 200 VAC	1 mA or less			10 μA or less				0 mA							1 mA or less
Weight g	1 m:33 3 m:87 5 m:142	1 m:18 3 m:49 5 m:80	1 m:33 3 m:87 5 m:142	1 m:18 3 m:49 5 m:80	1 m:18 3 m:49 5 m:80		1 m:33 3 m:87 5 m:142	1 m:18 3 m:49 5 m:80	1 m:18 3 m:49 5 m:80				1 m:33 3 m:87 5 m:142			1 m:61 3 m:166 5 m:272

*1 : Refer to Ending Page 1 for detailed switch specifications and dimensions.
*2 : Switches other than the above models, such as switches with connectors, are also available. Refer to Ending Page 1.
*3 : The max. load current is 20 mA at 25°C. The current is lower than 20 mA if the operating ambient temperature around the switch is higher than 25°C. (5 to 10 mA at 60°C)
*4 : AC magnetic field proof switch (T2YD/T2YDT) cannot be used in DC magnetic fields.

Cylinder weight

● STG-MQ

Unit: kg

Item / Bore size (mm)	Stroke length 25	50	75	100	125	150	175	200	250	300	350	400	Switch weight
ø20	0.71	1.15	1.35	1.54	1.73	1.92	2.12	2.35	2.77	3.15	3.54	3.92	Refer to the weight in the switch specifications.
ø25	1.00	1.63	1.90	2.16	2.43	2.69	2.95	3.27	3.85	4.38	4.91	5.43	
ø32	2.06	2.60	2.99	3.39	3.78	4.18	4.57	5.06	5.94	6.73	7.52	8.30	
ø40	2.38	2.83	3.24	3.66	4.06	4.48	4.89	5.39	6.32	7.15	7.97	8.79	
ø50	4.02	4.72	5.34	5.96	6.59	7.21	7.83	8.61	10.01	11.25	12.51	13.77	
ø63	5.01	5.82	6.56	7.29	8.02	8.75	9.49	10.38	12.00	13.45	14.91	16.36	

● STG-BQ

Unit: kg

Item / Bore size (mm)	Stroke length 25	50	75	100	125	150	175	200	250	300	350	400	Switch weight
ø20	0.74	1.13	1.29	1.50	1.66	1.84	2.00	2.19	2.54	2.88	3.22	3.56	Refer to the weight in the switch specifications.
ø25	1.03	1.56	1.79	2.05	2.27	2.50	2.72	2.96	3.43	3.88	4.33	4.78	
ø32	1.85	2.29	2.60	2.96	3.27	3.57	3.88	4.22	4.86	5.47	6.08	6.69	
ø40	2.18	2.65	3.00	3.40	3.75	4.10	4.45	4.84	5.56	6.26	6.96	7.66	
ø50	3.69	4.41	4.95	5.57	6.10	6.63	7.17	8.27	8.90	9.97	11.06	12.13	
ø63	4.66	5.51	6.15	6.89	7.53	8.18	8.82	9.51	10.88	12.19	13.45	14.71	

Theoretical thrust table

(Unit: N)

Bore size (mm)	Operating direction	Working pressure MPa 0.15	0.2	0.3	0.4	0.5	0.6	0.7	0.8	0.9	1.0
ø20	Push	-	62.8	94.2	1.26×10^2	1.57×10^2	1.88×10^2	2.20×10^2	2.51×10^2	2.83×10^2	3.14×10^2
	Pull	-	47.1	70.7	94.2	1.18×10^2	1.41×10^2	1.65×10^2	1.88×10^2	2.12×10^2	2.36×10^2
ø25	Push	-	98.2	1.47×10^2	1.96×10^2	2.45×10^2	2.95×10^2	3.44×10^2	3.93×10^2	4.42×10^2	4.91×10^2
	Pull	-	75.6	1.13×10^2	1.51×10^2	1.89×10^2	2.27×10^2	2.64×10^2	3.02×10^2	3.40×10^2	3.78×10^2
ø32	Push	1.21×10^2	1.61×10^2	2.41×10^2	3.22×10^2	4.02×10^2	4.83×10^2	5.63×10^2	6.43×10^2	7.24×10^2	8.04×10^2
	Pull	90.5	1.21×10^2	1.81×10^2	2.41×10^2	3.02×10^2	3.62×10^2	4.22×10^2	4.83×10^2	5.43×10^2	6.03×10^2
ø40	Push	1.88×10^2	2.51×10^2	3.77×10^2	5.03×10^2	6.28×10^2	7.54×10^2	8.80×10^2	1.01×10^3	1.13×10^3	1.26×10^3
	Pull	1.58×10^2	2.11×10^2	3.17×10^2	4.22×10^2	5.28×10^2	6.33×10^2	7.39×10^2	8.44×10^2	9.50×10^2	1.06×10^3
ø50	Push	2.95×10^2	3.93×10^2	5.89×10^2	7.85×10^2	9.82×10^2	1.18×10^3	1.37×10^3	1.57×10^3	1.77×10^3	1.96×10^3
	Pull	2.47×10^2	3.30×10^2	4.95×10^2	6.60×10^2	8.25×10^2	9.90×10^2	1.15×10^3	1.32×10^3	1.48×10^3	1.65×10^3
ø63	Push	4.68×10^2	6.23×10^2	9.35×10^2	1.25×10^3	1.56×10^3	1.87×10^3	2.18×10^3	2.49×10^3	2.81×10^3	3.12×10^3
	Pull	4.20×10^2	5.61×10^2	8.41×10^2	1.12×10^3	1.40×10^3	1.68×10^3	1.96×10^3	2.24×10^3	2.52×10^3	2.80×10^3

LCM
LCR
LCG
LCW
LCX
STM
STG
STS/STL
STR2
UCA2
ULK*
JSK/M2
JSG
JSC3/JSC4
USSD
UFCD
USC
UB
JSB3
LMB
LML
HCM
HCA
LBC
CAC4
UCAC2
CAC-N
UCAC-N
RCS2
RCC2
PCC
SHC
MCP
GLC
MFC
BBS
RRC
GRC
RV3*
NHS
HRL
LN
Hand
Chuk
MecHnd/Chuk
ShkAbs
FJ
FK
SpdContr
Ending

How to order

Without switch (built-in magnet for switch)

STG - M Q - 32 ◯ - 25 - H ———— M1

With switch (built-in magnet for switch)

STG - M Q - 32 ◯ - 25 - H - T2H - R - M1

Model No. | Position locking | Ⓐ Bearing | Ⓑ Bore size | Ⓒ Port thread | Ⓓ Stroke length | Ⓔ Position locking mechanism | Ⓕ Switch model No. *1, *2, *3, *4, *6 | Ⓖ Switch quantity | Ⓗ Option *5

Code	Description
Ⓐ Bearing	
M	Metal bush bearing
B	Ball bearing
Ⓑ Bore size (mm)	
20	ø20
25	ø25
32	ø32
40	ø40
50	ø50
63	ø63
Ⓒ Port thread	
Blank	Rc thread
NN	NPT thread (made-to-order product)
GN	G thread (made-to-order product)
Ⓓ Stroke length (mm)	
Refer to the stroke length table on the following page	
Ⓔ Position locking mechanism	
H	Head side position locking mechanism
R	Rod side position locking mechanism

Ⓕ Switch model No.

Axial lead wire	Radial lead wire	Contact	Voltage AC	Voltage DC	Display	Lead wire
T0H*	T0V*	Reed	●	●	1-color display	2-wire
T5H*	T5V*	Reed	●	●	Without indicator lamp	2-wire
T1H*	T1V*	Proximity	●		1-color display	2-wire
T2H*	T2V*	Proximity		●	1-color display	2-wire
T3H*	T3V*	Proximity		●	1-color display	3-wire
T3PH*	T3PV*	Proximity		●	1-color display	3-wire
T2WH*	T2WV*	Proximity		●	2-color display	2-wire
T2YH*	T2YV*	Proximity		●	2-color display	2-wire
T3WH*	T3WV*	Proximity		●	2-color display	3-wire
T3YH*	T3YV*	Proximity		●	2-color display	3-wire
T2JH*	T2JV*	Proximity		●	1-color display off-delay	2-wire
T2YD*	-	Proximity		●	2-color display for AC magnetic field	2-wire
T2YDT*	-	Proximity		●	2-color display for AC magnetic field	2-wire

* Lead wire length	
Blank	1 m (standard)
3	3 m (option)
5	5 m (option)

Ⓖ Switch quantity	
R	1 on rod side
H	1 on head side
D	2
T	3

Ⓗ Option	
M0	Non-locking manual override (with release bolt)
M1	Locking manual override

⚠ Precautions for model No. selection

*1 : Switches other than Ⓕ Switch model No. are also available. (Made-to-order product) Refer to Ending Page 1 for details.
*2 : T8H/V switch cannot be installed on STG-Q.
*3 : Note that the min. stroke length varies depending on the switch.
*4 : In some cases, a switch cannot be inserted from the rod side of the head side position locking of 25 mm or less stroke length.
In this case, temporarily remove the end plate and install the switch.
Contact CKD to inquire about the removal and assembling method of the end plate.
*5 : Only non-locking manual override is available if "M0" or "M1" of Ⓗ Option is not selected. Release bolt is not included.
*6 : Switches are shipped with the product. Contact CKD if assembling before shipment is necessary.

[Example of model No.]

STG-BQ-50-75-H-T0H-D-M0

Model: Guided cylinder Double acting/position locking

Ⓐ Bearing : Ball bearing
Ⓑ Bore size : ø50 mm
Ⓒ Port thread : Rc thread
Ⓓ Stroke length : 75 mm
Ⓔ Position locking mechanism : Head side position locking mechanism
Ⓕ Switch model No. : Reed T0H switch, lead wire length 1 m
Ⓖ Switch quantity : 2
Ⓗ Option : Non-locking manual override

LCM
LCR
LCG
LCW
LCX
STM
STG
STS/STL
STR2
UCA2
ULK*
JSK/M2
JSG
JSC3/JSC4
USSD
UFCD
USC
UB
JSB3
LMB
LML
HCM
HCA
LBC
CAC4
UCAC2
CAC-N
UCAC-N
RCS2
RCC2
PCC
SHC
MCP
GLC
MFC
BBS
RRC
GRC
RV3*
NHS
HRL
LN
Hand
Chuk
MecHnd/Chuk
ShkAbs
FJ
FK
SpdContr
Ending

Ⓓ Stroke length

Stroke length (mm)		Applicable bore size					
		ø20	ø25	ø32	ø40	ø50	ø63
Standard stroke length	25	●	●	●	●	●	●
	50	●	●	●	●	●	●
	75	●	●	●	●	●	●
	100	●	●	●	●	●	●
	125	●	●	●	●	●	●
	150	●	●	●	●	●	●
	175	●	●	●	●	●	●
	200	●	●	●	●	●	●
	250	●	●	●	●	●	●
	300	●	●	●	●	●	●
	350	●	●	●	●	●	●
	400	●	●	●	●	●	●
Min. stroke length	*2	**Refer to page 368.**					
Custom stroke length	*1	**In 5 mm increments**					

*1: The total dimensions are the same as the longer standard stroke length.

How to order switch

SW - T0V

Switch model No.
(Item Ⓕ on page 370)

Note: Contact CKD when using
an environment-friendly T switch.

Specifications for rechargeable battery

(Catalog No. CC-1226A)

● Design compatible with rechargeable battery manufacturing process.

STG -$^{M}_{B}$Q - ····· - P4*

LCM
LCR
LCG
LCW
LCX
STM
STG
STS/STL
STR2
UCA2
ULK*
JSK/M2
JSG
JSC3/JSC4
USSD
UFCD
USC
UB
JSB3
LMB
LML
HCM
HCA
LBC
CAC4
UCAC2
CAC-N
UCAC-N
RCS2
RCC2
PCC
SHC
MCP
GLC
MFC
BBS
RRC
GRC
RV3*
NHS
HRL
LN
Hand
Chuk
MecHnd/Chuk
ShkAbs
FJ
FK
SpdContr
Ending

Internal structure and parts list

● Metal bush bearing STG-MQ

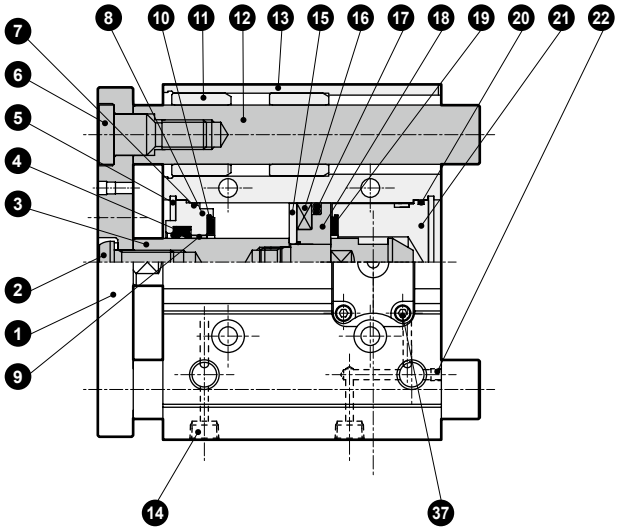

● Ball bearing STG-BQ

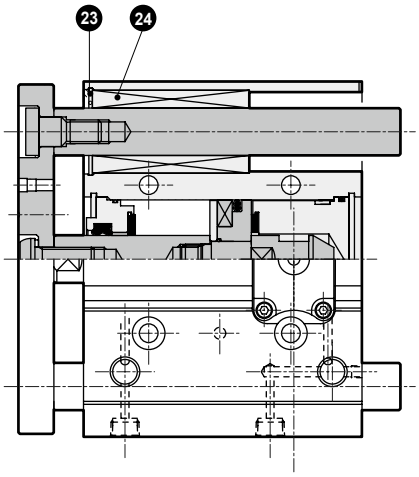

· 100 and over stroke length

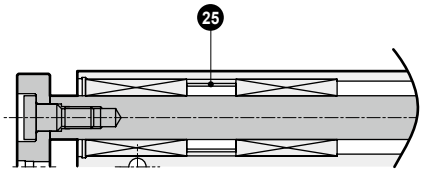

● Head side position locking STG- Q-H$^{M}_{B}$

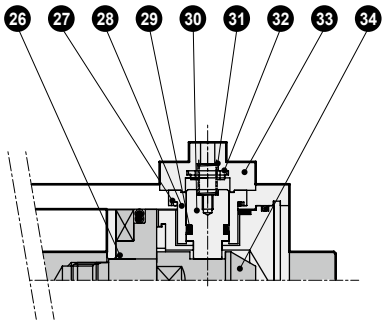

● Rod side position locking STG- Q-R$^{M}_{B}$

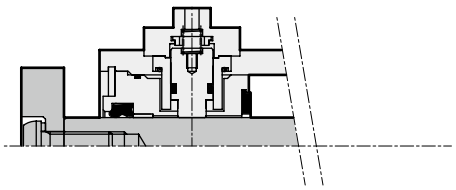

● Locking manual override (M1)

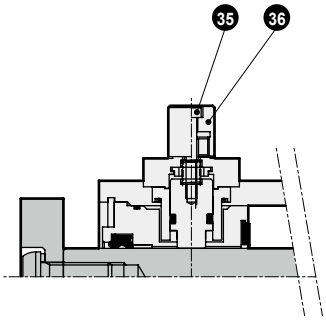

Parts list

No.	Part name	Material	Remarks	No.	Part name	Material	Remarks
1	End plate	Steel	Nickeling	19	Cushion rubber	Urethane rubber	
2	Hexagon socket button head bolt	Steel	Zinc chromate	20	O-ring	Nitrile rubber	
3	Piston rod	Stainless steel (ø20 to ø25)	Industrial chrome plating	21	Head cover	Aluminum alloy	Chromate
		Steel (ø32 to ø63)	Industrial chrome plating	22	Hexagon socket set screw	Stainless steel	
4	Rod packing	Nitrile rubber		23	C type snap ring	Steel	Zinc phosphate
5	C type snap ring	Steel	Zinc phosphate	24	Ball bushing		
6	Bolt	Steel	Zinc chromate	25	Collar	Aluminum alloy	
7	Metal gasket	Nitrile rubber		26	O-ring	Nitrile rubber	
8	Rod metal	Special aluminum alloy (ø20 to ø25)	Alumite	27	O-ring	Nitrile rubber	
		Aluminum alloy (ø40 to ø63)	Chromate	28	Stopper housing	Aluminum alloy (ø20 to ø50)	Alumite
9	Bush	Oiles drymet	H: ø40 and over			Steel (ø63)	Chromate
			R: ø32 and over	29	Stopper packing	Nitrile rubber	
10	Cushion rubber	Urethane rubber		30	Stopper piston	Steel	Nitriding
11	Metal	Oil impregnated bearing alloy		31	Coil spring	Steel	Paint
12	Guide rod	Steel	Industrial chrome plating	32	Cushion rubber	Urethane rubber	
13	Cylinder body	Aluminum alloy	Hard alumite	33	Stopper cover	Aluminum alloy	Chromate
14	Plug	Steel	Nickeling	34	Sleeve	Steel	Nitriding
15	Spacer	Aluminum alloy	Chromate	35	Hexagon socket head cap screw	Steel	
16	Magnet			36	Round nut	Aluminum alloy	
17	Piston packing	Nitrile rubber		37	Hexagon socket head cap screw	Steel	
18	Piston	Aluminum alloy	Chromate				

Repair parts list

Bore size (mm)	Kit No.	Repair parts No.
ø20	STG-Q-H-20K STG-Q-R-20K	❹ ❼ ❿ ⓱ ⓳ ⓴ ㉗ ㉙ ㉜
ø25	STG-Q-H-25K STG-Q-R-25K	
ø32	STG-Q-32K	
ø40	STG-Q-40K	
ø50	STG-Q-50K	
ø63	STG-Q-63K	

[Explanation of manual override]

● Non-locking manual override (option code: M0)

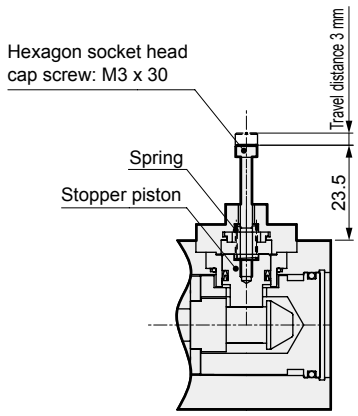

By screwing the hexagon socket head cap screw (M3 x 30) into the stopper piston and pulling the bolt with force of 20 N or more, the stopper piston moves and the lock is released. (Carry out work when the cylinder is horizontally installed with no load or when the opposite side port is pressurized.) When the bolt is released from the hand, the stopper piston is returned to the original position by the built-in spring and engaged in the groove, and the piston is locked.

● Locking manual override (option code: M1)

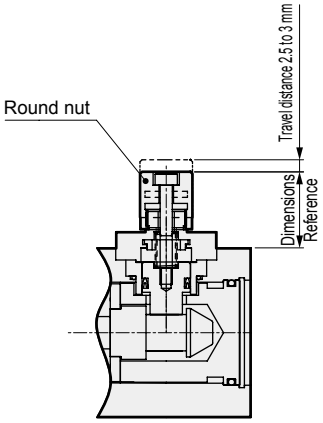

By rotating the round nut leftward (counterclockwise), the stopper piston moves and the lock is released. Locking the round nut by rotating it to the right (clockwise) causes the stopper piston to return. When it fits into the lock groove, the piston is locked. When locking, screw in the round nut fully, since the cylinder may be damaged if the stopper piston is not securely locked in the groove.

Dimensions CAD

● Position locking/rod side

·STG-$^{M}_{B}$Q-20, 25-R

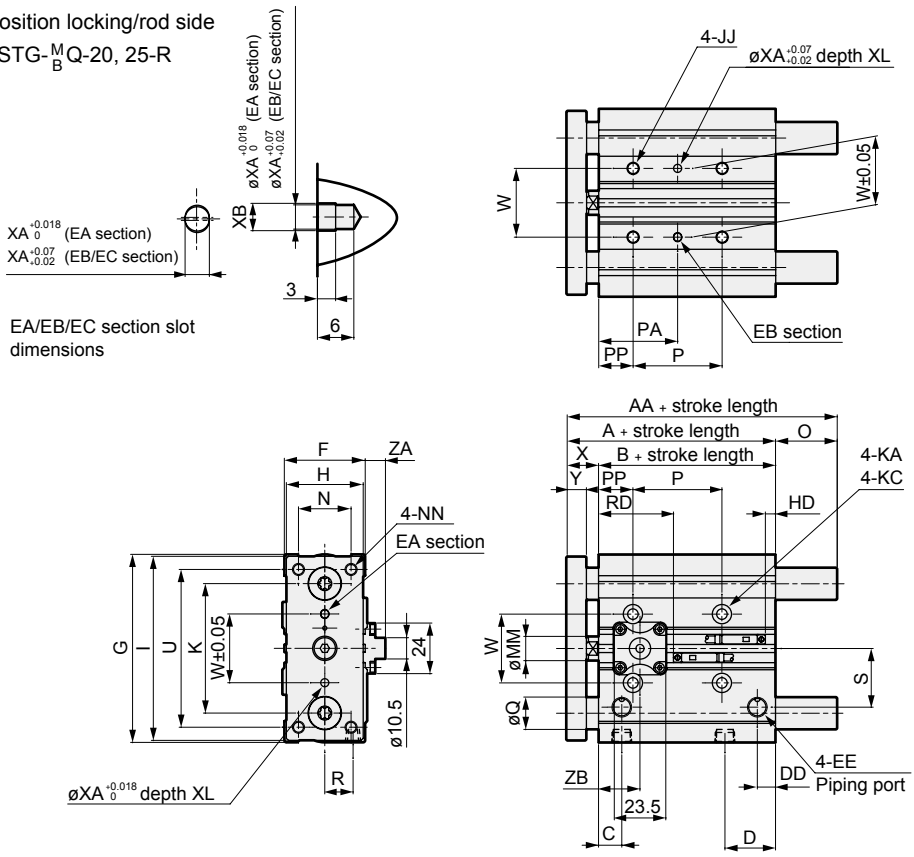

● Position locking/head side

·STG-$^{M}_{B}$Q-20, 25-H

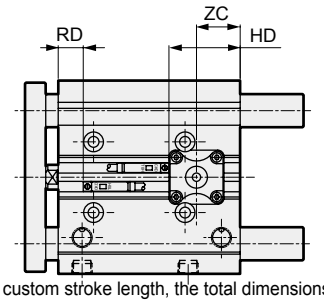

·Locking manual (M1)

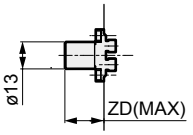

*1 : When using a custom stroke length, the total dimensions are the same as the longer standard stroke length.

*2 : Refer to page 410 for RD, HD and protruding dimensions of the 2-color display (except for T2WH/V and T3WH/V), off-delay, AC magnetic field proof, and T1H/V switches.

● STG-$^{M}_{B}$Q common

Code / Bore size (mm)	Standard stroke length (mm)	A	B	C	D	DD	EE	F	G	H	HH	I	JJ	K	KA
ø20	25,50,75,100,125,150	78	62	10.5	24.5	8.5	Rc1/8	36	83	30	M5 depth 13	81	M6 depth 12	54	5.2 through
ø25	175,200,250,300,350,400	78.5	62.5	11.5	25	9	Rc1/8	42	93	38	M6 depth 15	91	M6 depth 12	64	5.2 through

Code / Bore size (mm)	MM	N	NN	KC	P				PA				PP	R	S
					75 st or less	Over 75 st to 175 st	>175 st, ≤250 st	Over 250 st	75 st or less	Over 75 st to 175 st	>175 st, ≤250 st	Over 250 st			
ø20	10	18	M5 through	9.5 spot face depth 5.5	44	120	200	300	39	77	117	167	17	11	25
ø25	12	26	M6 through	9.5 spot face depth 5.5	44	120	200	300	39	77	117	167	17	14	29

Code / Bore size (mm)	U	V	W	WW	X	Y	XA	XB	Position locking mechanism				Head side position locking				Rod side position locking			
									ZA	ZB	ZC	ZD	T0/T5/T2/T3		T2W/T3W		T0/T5/T2/T3		T2W/T3W	
													RD	HD	RD	HD	RD	HD	RD	HD
ø20	70	24	28	72	16 0 -2	9.5	3	3.5	11	20	23	23	6.5	39	8.5	41	34.5	8.5	36.5	10.5
ø25	78	30	34	82	16 0 -2	9.5	4	4.5	9	20.5	19	21	10	34	12	36	35	8.5	37	10.5

● STG-MQ

Code / Bore size (mm)	AA			Q	O		
	25 st or less	Over 25 st to 175 st	Over 175 st		25 st or less	Over 25 st to 175 st	Over 175 st
ø20	78	84.5	122	12	0	6.5	44
ø25	78.5	84	122	16	0	5.5	43.5

● STG-BQ

Code / Bore size (mm)	AA			Q	O		
	75 st or less	Over 75 st to 175 st	Over 175 st		75 st or less	Over 75 st to 175 st	Over 175 st
ø20	80	100	122	10	2	22	44
ø25	84	103	122	13	5.5	24.5	43.5

Dimensions

CAD

● Position locking/rod side
·STG-$^{M}_{B}$Q-32 to 63-R

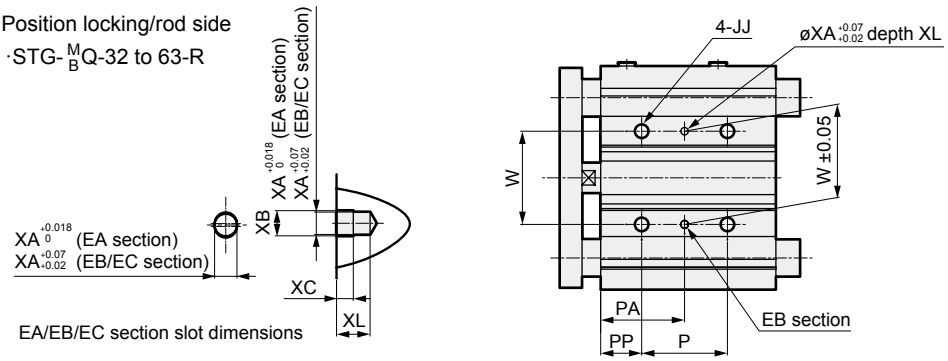

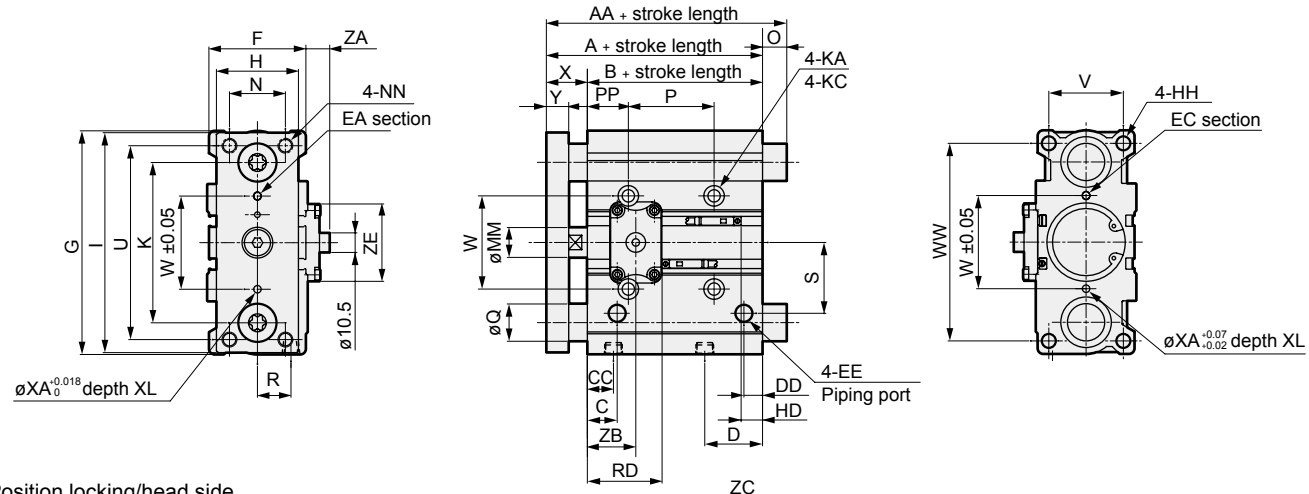

● Position locking/head side
·STG-$^{M}_{B}$Q-32 to 63-H

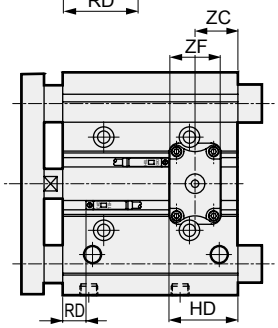

·Locking manual (M1)

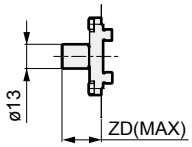

● STG-$^{M}_{B}$Q common

*1 : When using a custom stroke length, the total dimensions are the same as the longer standard stroke length.
*2 : Refer to page 410 for RD, HD and protruding dimensions of the 2-color display (except for T2WH/V and T3WH/V), off-delay, AC magnetic field proof, T1H/V switches.

Code / Bore size (mm)	Standard stroke length (mm)	A	B	C	D	DD	EE	F	G	H	HH	I	JJ	K
ø32	25,50,75,100,125, 150,175,200,250, 300,350,400	84.5	62.5	12.5	30.5	9	Rc1/8	48	112	44	M8 depth 20	110	M8 depth 16	78
ø40		91	69	14	31	10	Rc1/8	54	120	44	M8 depth 20	118	M8 depth 16	86
ø50		97	69	14	35	11	Rc1/4	64	148	60	M10 depth 22	146	M10 depth 20	110
ø63		102	74	16.5	35	15	Rc1/4	78	162	70	M10 depth 22	158	M10 depth 20	124

Code / Bore size (mm)	KA	KC	MM	N	NN	P				PA				PP	R	S
						75 st or less	Over 75 st to 175 st	Over 175 st to 275 st	Over 275 st	75 st or less	Over 75 st to 175 st	Over 175 st to 275 st	Over 275 st			
ø32	6.3 through	11 spot face depth 7.5	16	30	M8 through	48	124	200	300	45	83	121	171	21	15	34
ø40	6.3 through	11 spot face depth 7.5	16	30	M8 through	48	124	200	300	46	84	122	172	22	18	38
ø50	8.6 through	14 spot face depth 9	20	40	M10 through	48	124	200	300	48	86	124	174	24	21.5	47
ø63	8.6 through	14 spot face depth 9	20	50	M10 through	52	128	200	300	50	88	124	174	24	28	55

Code / Bore size (mm)	U	V	W	WW	X	Y	XA	XB	XC	XL	Position locking mechanism						Head side position locking				Rod side position locking			
											ZA	ZB	ZC	ZD	ZE	ZF	T0/T5/T2/T3		T2W/T3W		T0/T5/T2/T3		T2W/T3W	
																	RD	HD	RD	HD	RD	HD	RD	HD
ø32	96	34	42	98	22 0 -2	11.5	4	4.5	3	6	10	21	20	23.5	32.5	21.5	10	34.5	12	36.5	35	8.5	37	10.5
ø40	104	40	50	106	22 0 -2	11.5	4	4.5	3	6	12	25	23	23.5	40.5	23	13	37	15	39	40	12	42	14
ø50	130	46	66	130	28 0 -2	15.5	5	6	4	8	12	25	23	24.5	40.5	23	13.5	37	15.5	39	39	11.5	41	13.5
ø63	130	58	80	142	28 0 -2	15.5	5	6	4	8	11.5	25	25.5	24	40.5	23	14	40	16	42	39	16	41	18

● STG-MQ

Code / Bore size (mm)	AA			Q	O		
	25 st or less	Over 25 st to 175 st	Over 175 st		25 st or less	Over 25 st to 175 st	Over 175 st
ø32	84.5	100	140	20	0	15.5	55.5
ø40	91	100	140	20	0	9	49
ø50	97	116	161	25	0	19	64
ø63	102	116	161	25	0	14	59

● STG-BQ

Code / Bore size (mm)	AA				Q	O			
	25 st or less	Over 25 st to 75 st	Over 75 st to 175 st	Over 175 st		25 st or less	Over 25 st to 75 st	Over 75 st to 175 st	Over 175 st
ø32	84.5	98	118	140	16	0	13.5	33.5	55.5
ø40	91	98	118	140	16	0	7	27	49
ø50	97	114	134	161	20	0	17	37	64
ø63	102	114	134	161	20	0	12	32	59

Guided cylinder, double acting/rubber scraper
Guided cylinder, double acting/coil scraper

STG-$^{M}_{B}$G Series STG-$^{M}_{B}$G1 Series

● Bore size:ø20/ø25/ø32/ø40/ø50/ø63

JIS symbol

RoHS CAD

Specifications

Item	STG-$^{M}_{B}$G/STG-$^{M}_{B}$G1					
Bore size mm	ø20	ø25	ø32	ø40	ø50	ø63
Actuation	Double acting/scraper					
Working fluid	Compressed air					
Max. working pressure MPa	1.0 (≈150 psi, 10 bar)					
Min. working pressure MPa	0.2 (≈29 psi, 2 bar)		0.15 (≈22 psi, 1.5 bar)			
Proof pressure MPa	1.6 (≈230 psi, 16 bar)					
Ambient temperature °C	-10 (14°F) to 60 (140°F) (no freezing)					
Port size	Rc1/8				Rc1/4	
Stroke tolerance mm	+2.0 0					
Working piston speed mm/s	50 to 500					50 to 300
Cushion	With rubber cushion					
Lubrication	Not required (use turbine oil class 1 ISO VG32 if necessary for lubrication)					
Allowable absorbed energy J	0.157	0.157	0.401	0.627	0.980	1.560

Stroke length

Bore size	Standard stroke length (mm)	Max. stroke length (mm)	Min. stroke length (mm)	Min. stroke (mm)(switch)
ø20	20/30/40/50/75/100/125 150/175/200/250/300/350/400	400	5	5(10) *2
ø25				
ø32	25/50/75/100 125/150/175 200/250/300 350/400			
ø40				
ø50				
ø63				

*1: The custom stroke length is available in 5 mm increments. However, the total length is the same as that of the next longer standard stroke length.
*2: For types with one or two switches. The value in ( ) is the min. stroke length for switches of the 2-color display and AC magnetic field proof.

Theoretical thrust table

(Unit: N)

Bore size (mm)	Operating direction	Working pressure MPa									
		0.15	0.2	0.3	0.4	0.5	0.6	0.7	0.8	0.9	1.0
ø20	Push	-	62.8	94.2	1.26×10^{2}	1.57×10^{2}	1.88×10^{2}	2.20×10^{2}	2.51×10^{2}	2.83×10^{2}	3.14×10^{2}
	Pull	-	47.1	70.7	94.2	1.18×10^{2}	1.41×10^{2}	1.65×10^{2}	1.88×10^{2}	2.12×10^{2}	2.36×10^{2}
ø25	Push	-	98.2	1.47×10^{2}	1.96×10^{2}	2.45×10^{2}	2.95×10^{2}	3.44×10^{2}	3.93×10^{2}	4.42×10^{2}	4.91×10^{2}
	Pull	-	75.6	1.13×10^{2}	1.51×10^{2}	1.89×10^{2}	2.27×10^{2}	2.64×10^{2}	3.02×10^{2}	3.40×10^{2}	3.78×10^{2}
ø32	Push	1.21×10^{2}	1.61×10^{2}	2.41×10^{2}	3.22×10^{2}	4.02×10^{2}	4.83×10^{2}	5.63×10^{2}	6.43×10^{2}	7.24×10^{2}	8.04×10^{2}
	Pull	90.5	1.21×10^{2}	1.81×10^{2}	2.41×10^{2}	3.02×10^{2}	3.62×10^{2}	4.22×10^{2}	4.83×10^{2}	5.43×10^{2}	6.03×10^{2}
ø40	Push	1.88×10^{2}	2.51×10^{2}	3.77×10^{2}	5.03×10^{2}	6.28×10^{2}	7.54×10^{2}	8.80×10^{2}	1.01×10^{3}	1.13×10^{3}	1.26×10^{3}
	Pull	1.58×10^{2}	2.11×10^{2}	3.17×10^{2}	4.22×10^{2}	5.28×10^{2}	6.33×10^{2}	7.39×10^{2}	8.44×10^{2}	9.50×10^{2}	1.06×10^{3}
ø50	Push	2.95×10^{2}	3.93×10^{2}	5.89×10^{2}	7.85×10^{2}	9.82×10^{2}	1.18×10^{3}	1.37×10^{3}	1.57×10^{3}	1.77×10^{3}	1.96×10^{3}
	Pull	2.47×10^{2}	3.30×10^{2}	4.95×10^{2}	6.60×10^{2}	8.25×10^{2}	9.90×10^{2}	1.15×10^{3}	1.32×10^{3}	1.48×10^{3}	1.65×10^{3}
ø63	Push	4.68×10^{2}	6.23×10^{2}	9.35×10^{2}	1.25×10^{3}	1.56×10^{3}	1.87×10^{3}	2.18×10^{3}	2.49×10^{3}	2.81×10^{3}	3.12×10^{3}
	Pull	4.20×10^{2}	5.61×10^{2}	8.41×10^{2}	1.12×10^{3}	1.40×10^{3}	1.68×10^{3}	1.96×10^{3}	2.24×10^{3}	2.52×10^{3}	2.80×10^{3}

Switch specifications

● 1-color/2-color display/for AC magnetic field proof

Item	Proximity 2-wire	Proximity 2-wire			Proximity 3-wire				Reed 2-wire							Proximity 2-wire
	T1H/ T1V	T2H/T2V/ T2JH/T2JV	T2YH/ T2YV	T2WH/ T2WV	T3H/ T3V	T3PH/ T3PV	T3YH/ T3YV	T3WH/ T3WV	T0H/T0V		T5H/T5V		T8H/T8V			T2YD(*4) T2YDT
Applications	For programmable controller, relay, compact solenoid valve	Dedicated for programmable controller			For programmable controller, relay				For programmable controller, relay		For programmable controller, relay, IC circuit (no indicator lamp), serial connection		For programmable controller, relay			For programmable controller
Output method	-				NPN output	PNP output	NPN output	NPN output	-							
Pwr. supp. V.	-				10 to 28 VDC				-							
Load voltage	85 to 265 VAC	10 to 30 VDC		24 VDC ±10%	30 VDC or less				12/24 VDC	100/110 VAC	5/12/24 VDC	100/110 VAC	12/24 VDC	110 VAC	220 VAC	24 VDC ±10%
Load current	5 to 100 mA	5 to 20 mA (*3)			100 mA or less		50 mA or less		5 to 50 mA	7 to 20 mA	≤50 mA	≤20 mA	5 to 50 mA	7 to 20 mA	7 to 10 mA	5 to 20 mA
Indicator lamp	LED (Lit when ON)	LED (Lit when ON)	Red/green LED (Lit when ON)	Red/green LED (Lit when ON)	LED (Lit when ON)	Yellow LED (Lit when ON)	Red/green LED (Lit when ON)	Red/green LED (Lit when ON)	LED (Lit when ON)		Without indicator lamp		LED (Lit when ON)			Red/green LED (Lit when ON)
Leakage current	≤ 1 mA at 100 VAC, ≤ 2 mA at 200 VAC	1 mA or less			10 μA or less				0 mA							1 mA or less
Weight g	1 m:33 3 m:87 5 m:142	1 m:18 3 m:49 5 m:80	1 m:33 3 m:87 5 m:142	1 m:18 3 m:49 5 m:80	1 m:18 3 m:49 5 m:80		1 m:33 3 m:87 5 m:142	1 m:18 3 m:49 5 m:80	1 m:18 3 m:49 5 m:80				1 m:33 3 m:87 5 m:142			1 m:61 3 m:166 5 m:272

*1 : Refer to Ending Page 1 for detailed switch specifications and dimensions.
*2 : Switches other than the above models, such as switches with connectors, are also available. Refer to Ending Page 1.
*3 : The max. load current is 20 mA at 25°C. The current is lower than 20 mA if the operating ambient temperature around the switch is higher than 25°C. (5 to 10 mA at 60°C)
*4 : AC magnetic field proof switch (T2YD/T2YDT) cannot be used in DC magnetic fields.

Cylinder weight

● STG-MG/STG-MG1

Unit: kg

Item / Bore size (mm)	Stroke length 20	25	30	40	50	75	100	125	150	175	200	250	300	350	400	Switch weight
ø20	0.69		0.77	0.85	0.92	1.17	1.37	1.56	1.75	1.94	2.14	2.59	2.98	3.36	3.75	Refer to the weight in the switch specifications.
ø25	0.98		1.08	1.19	1.29	1.66	1.92	2.18	2.46	2.72	2.98	3.62	4.14	4.68	5.20	
ø32		1.76			2.13	2.66	3.06	3.46	3.85	4.24	4.63	5.61	6.39	7.19	7.97	
ø40		2.03			2.44	2.89	3.29	3.71	4.12	4.53	4.94	5.95	6.78	7.61	8.43	
ø50		3.47			4.09	4.80	5.42	6.04	6.66	7.28	7.90	9.46	10.69	11.95	13.21	
ø63		4.31			5.05	5.87	6.60	7.33	8.07	8.80	9.53	11.32	12.77	14.23	15.68	

● STG-BG/STG-BG1

Unit: kg

Item / Bore size (mm)	Stroke length 20	25	30	40	50	75	100	125	150	175	200	250	300	350	400	Switch weight
ø20	0.72		0.79	0.90	0.98	1.15	1.31	1.51	1.68	1.85	2.02	2.39	2.73	3.07	3.41	Refer to the weight in the switch specifications.
ø25	1.01		1.10	1.27	1.36	1.58	1.82	2.08	2.30	2.52	2.75	3.23	3.69	4.13	4.58	
ø32		1.61			1.91	2.35	2.66	3.02	3.33	3.63	3.94	4.61	5.22	5.83	6.44	
ø40		1.88			2.23	2.70	3.05	3.46	3.81	4.16	4.51	5.26	5.96	6.66	7.36	
ø50		3.23			3.76	4.49	5.02	5.64	6.18	6.71	7.24	8.44	9.49	10.59	11.66	
ø63		4.07			4.71	5.56	6.20	6.93	7.57	8.22	8.86	10.25	11.61	12.87	14.13	

LCM
LCR
LCG
LCW
LCX
STM
STG
STS/STL
STR2
UCA2
ULK*
JSK/M2
JSG
JSC3/JSC4
USSD
UFCD
USC
UB
JSB3
LMB
LML
HCM
HCA
LBC
CAC4
UCAC2
CAC-N
UCAC-N
RCS2
RCC2
PCC
SHC
MCP
GLC
MFC
BBS
RRC
GRC
RV3*
NHS
HRL
LN
Hand
Chuk
MecHnd/Chuk
ShkAbs
FJ
FK
SpdContr
Ending

How to order

Without switch (built-in magnet for switch)

STG - M G - 32 ◯ - 25

With switch (built-in magnet for switch)

STG - M G - 32 ◯ - 25 - T2H - R

Model No.

Ⓐ Bearing

Ⓑ Model No.

Ⓒ Bore size

Ⓓ Port thread

Ⓔ Stroke length

Ⓕ Switch model No. *1, *2

Ⓖ Switch quantity

Code	Description
Ⓐ Bearing	
M	Metal bush bearing
B	Ball bearing
Ⓑ Model No.	
G	Rubber scraper
G1	Coil scraper
Ⓒ Bore size (mm)	
20	ø20
25	ø25
32	ø32
40	ø40
50	ø50
63	ø63
Ⓓ Port thread	
Blank	Rc thread
NN	NPT thread (made-to-order product)
GN	G thread (made-to-order product)
Ⓔ Stroke length (mm)	
Refer to the stroke length table on the following page	

Ⓕ Switch model No.

Axial lead wire	Radial lead wire	Contact	Voltage AC	Voltage DC	Display	Lead wire
T0H*	**T0V***	Reed	●	●	1-color display	2-wire
T5H*	**T5V***		●	●	Without indicator lamp	
T8H*	**T8V***		●	●	1-color display	
T1H*	**T1V***	Proximity	●		1-color display	2-wire
T2H*	**T2V***			●		
T3H*	**T3V***			●		3-wire
T3PH*	**T3PV***			●	1-color display	3-wire
T2WH*	**T2WV***			●	2-color display	2-wire
T2YH*	**T2YV***			●		
T3WH*	**T3WV***			●		3-wire
T3YH*	**T3YV***			●		
T2JH*	**T2JV***			●	1-color display off-delay	2-wire
T2YD*	**-**			●	2-color display for AC magnetic field	2-wire
T2YDT*	**-**			●		

* Lead wire length	
Blank	1 m (standard)
3	3 m (option)
5	5 m (option)

Ⓖ Switch quantity	
R	1 on rod side
H	1 on head side
D	2
T	3

⚠ Precautions for model No. selection

*1 : Switches other than Ⓕ Switch model No. are also available. (Made-to-order product) Refer to Ending Page 1 for details.

*2 : Switches are shipped with the product. Contact CKD if assembling before shipment is necessary.

[Example of model No.]

STG-MG1-40-50-T0H-H

Model: Guided cylinder/double acting/coil scraper

Ⓐ Bearing : Metal bush bearing
Ⓑ Model No. : Coil scraper
Ⓒ Bore size : ø40 mm
Ⓓ Port thread : Rc thread
Ⓔ Stroke length : 50 mm
Ⓕ Switch model No. : Reed T0H switch, lead wire length 1 m
Ⓖ Switch quantity : 1 on head side

Ⓔ Stroke length

Stroke length (mm)		Applicable bore size					
		ø20	ø25	ø32	ø40	ø50	ø63
Standard stroke length	20	●	●				
	25			●	●	●	●
	30	●	●				
	40	●	●				
	50	●	●	●	●	●	●
	75	●	●	●	●	●	●
	100	●	●	●	●	●	●
	125	●	●	●	●	●	●
	150	●	●	●	●	●	●
	175	●	●	●	●	●	●
	200	●	●	●	●	●	●
	250	●	●	●	●	●	●
	300	●	●	●	●	●	●
	350	●	●	●	●	●	●
	400	●	●	●	●	●	●
Min. stroke length *2		5(10)					
Custom stroke length *1		In 5 mm increments					

*1: The total dimensions are the same as the longer standard stroke length.
*2: The value in ( ) is the min. stroke length for switches of the 2-color display and AC magnetic field proof.

How to order switch

SW - T0V

Switch model No.
(Item Ⓕ on page 378)

Note: Contact CKD when using an environment-friendly T switch.

LCM
LCR
LCG
LCW
LCX
STM
STG
STS/STL
STR2
UCA2
ULK*
JSK/M2
JSG
JSC3/JSC4
USSD
UFCD
USC
UB
JSB3
LMB
LML
HCM
HCA
LBC
CAC4
UCAC2
CAC-N
UCAC-N
RCS2
RCC2
PCC
SHC
MCP
GLC
MFC
BBS
RRC
GRC
RV3*
NHS
HRL
LN
Hand
Chuk
MecHnd/Chuk
ShkAbs
FJ
FK
SpdContr
Ending

Internal structure and parts list

● Rubber scraper

· STG-MG

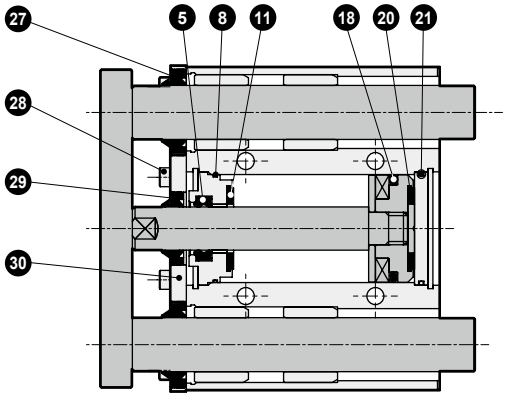

· STG-BG

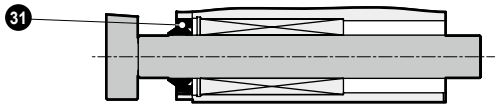

● Coil scraper

· STG-MG1

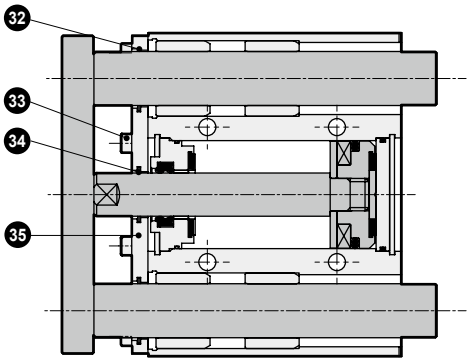

· STG-BG1

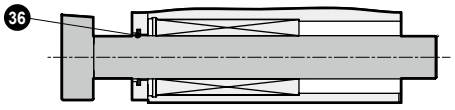

Parts list

* Parts other than those listed below are the same as those of double acting/standard single rod. Refer to pages 340 to 343.

No.	Part name	Material	Remarks	No.	Part name	Material	Remarks
STG-M/BG (rubber scraper)				STG-M/GG1 (coil scraper)			
27	Rubber scraper	Nitrile rubber + steel		32	Coil scraper	Phosphor bronze	
28	Hexagon socket head cap screw	Alloy steel	Zinc chromate	33	Hexagon socket head cap screw	Alloy steel	Zinc chromate
29	Rubber scraper	Nitrile rubber + steel		34	Coil scraper	Phosphor bronze	
30	Adaptor plate A	Aluminum alloy	Chromate	35	Adaptor plate B	Aluminum alloy	Alumite
31	Rubber scraper	Nitrile rubber + steel		36	Coil scraper	Phosphor bronze	

Repair parts list (Note: specify the kit No. when ordering repair parts.)

● STG-MG (rubber scraper)

Bore size (mm)	Kit No.	Repair parts No.
ø20	STG-MG-20K	4 7 10 17 19 20 27 29
ø25	STG-MG-25K	
ø32	STG-MG-32K	
ø40	STG-MG-40K	
ø50	STG-MG-50K	
ø63	STG-MG-63K	

● STG-BG (rubber scraper)

Bore size (mm)	Kit No.	Repair parts No.
ø20	STG-BG-20K	4 7 10 17 19 20 29 31
ø25	STG-BG-25K	
ø32	STG-BG-32K	
ø40	STG-BG-40K	
ø50	STG-BG-50K	
ø63	STG-BG-63K	

● STG-MG1 (coil scraper)

Bore size (mm)	Kit No.	Repair parts No.
ø20	STG-MG1-20K	4 7 10 19 20 32 34
ø25	STG-MG1-25K	
ø32	STG-MG1-32K	
ø40	STG-MG1-40K	
ø50	STG-MG1-50K	
ø63	STG-MG1-63K	

● STG-BG1 (coil scraper)

Bore size (mm)	Kit No.	Repair parts No.
ø20	STG-BG1-20K	4 7 10 17 19 20 34 36
ø25	STG-BG1-25K	
ø32	STG-BG1-32K	
ø40	STG-BG1-40K	
ø50	STG-BG1-50K	
ø63	STG-BG1-63K	

Dimensions

● STG-$^{M}_{B}$G

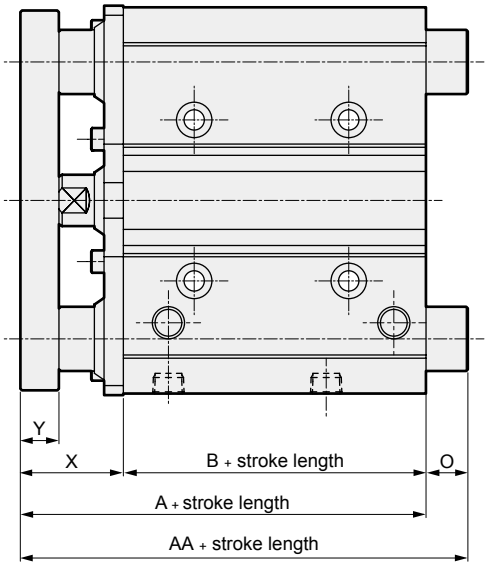

● STG-$^{M}_{B}$G1

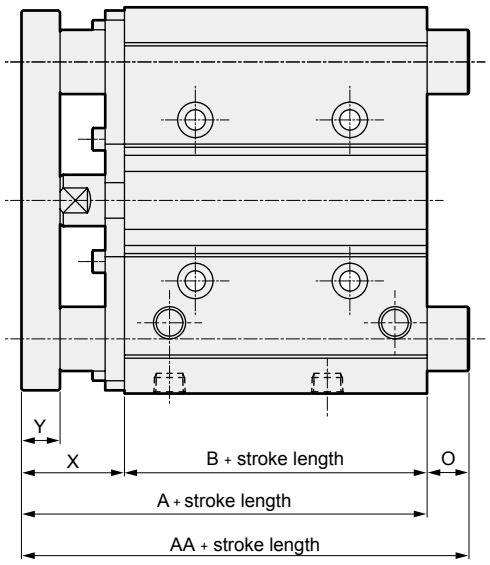

● STG-MG/G1

* Dimensions not listed below are the same as those of double acting/single rod on pages 345 and 346.
*1: When using a custom stroke length, the total dimensions are the same as the longer standard stroke length.

Code / Bore size (mm)	Standard stroke length	A	AA			B	O			X	Y
			50 st or less	Over 50 st to 200 st	Over 200 st		50 st or less	Over 50 st to 200 st	Over 200 st		
ø20	20,30,40,50,75,100,125,150,175 200,250,300,350,400	63	63	88	132	37	0	25	69	$26^{0}_{-2.0}$	9.5
ø25		63.5	63.5	94	132	37.5	0	30.5	68.5	$26^{0}_{-2.0}$	9.5
ø32	25,50,75,100,125,150,175 200,250,300,350,400	69.5	89	110	150	37.5	19.5	40.5	80.5	$32^{0}_{-2.0}$	11.5
ø40		76	89	110	150	44	13	34	74	$32^{0}_{-2.0}$	11.5
ø50		82	101	126	171	44	19	44	89	$38^{0}_{-2.0}$	15.5
ø63		87	101	126	171	49	14	39	84	$38^{0}_{-2.0}$	15.5

● STG-BG/G1

Code / Bore size (mm)	Standard stroke length	A	AA				B	O				X	Y
			30 st or less	Over 30 st to 100 st	Over 100 st to 200 st	Over 200 st		30 st or less	Over 30 st to 100 st	Over 100 st to 200 st	Over 200 st		
ø20	20,30,40,50,75,100,125,150,175 200,250,300,350,400	63	69	88	110	132	37	6	25	47	69	26^{0}_{-2}	9.5
ø25		63.5	75	94	113	132	37.5	11.5	30.5	49.5	68.5	26^{0}_{-2}	9.5
Code / Bore size (mm)	Standard stroke length	A	AA				B	O				X	Y
			50 st or less	Over 50 st to 100 st	Over 100 st to 200 st	Over 200 st		50 st or less	Over 50 st to 100 st	Over 100 st to 200 st	Over 200 st		
ø32	25,50,75,100,125,150,175 200,250,300,350,400	69.5	89	108	128	150	37.5	19.5	38.5	58.5	80.5	32^{0}_{-2}	11.5
ø40		76	89	108	128	150	44	13	32	52	74	32^{0}_{-2}	11.5
ø50		82	101	124	144	171	44	19	42	62	89	38^{0}_{-2}	15.5
ø63		87	101	124	144	171	49	14	37	57	84	38^{0}_{-2}	15.5

Guided cylinder Double acting/coolant proof

STG-MG $\frac{2}{3}$ Series

● Bore size:ø20/ø25/ø32/ø40/ø50/ø63

JIS symbol

RoHS CAD

Specifications

Item	STG-MG $\frac{2}{3}$					
Bore size mm	ø20	ø25	ø32	ø40	ø50	ø63
Actuation	Double acting/coolant proof					
Working fluid	Compressed air					
Max. working pressure MPa	1.0 (≈150 psi, 10 bar)					
Min. working pressure MPa	0.2 (≈29 psi, 2 bar)		0.15 (≈22 psi, 1.5 bar)			
Proof pressure MPa	1.6 (≈230 psi, 16 bar)					
Ambient temperature °C	-10 (14°F) to 60 (140°F) (no freezing)					
Port size	Rc1/8				Rc1/4	
Stroke tolerance mm	+2.0 0					
Working piston speed mm/s	50 to 500					50 to 300
Cushion	Rubber cushioned (urethane rubber)					
Lubrication	Not required (use turbine oil class 1 ISO VG32 if necessary for lubrication)					
Allowable absorbed energy J	0.157	0.157	0.401	0.627	0.980	1.560

Stroke length

Bore size	Standard stroke length (mm)	Max. stroke length (mm)	Min. stroke length (mm)	Min. stroke (mm)(switch)
ø20	20/30/40/50/75/100/125/ 150/175/200/250/300/350/400	400	5	10
ø25				
ø32	25/50/75/100 125/150/175 200/250/300 350/400			*2
ø40				
ø50				
ø63				

*1: The custom stroke length is available in 5 mm increments. However, the total length is the same as that of the next longer standard stroke length.
*2: For types with one or two switches.

Theoretical thrust table

(Unit: N)

Bore size (mm)	Operating direction	Working pressure MPa									
		0.15	0.2	0.3	0.4	0.5	0.6	0.7	0.8	0.9	1.0
ø20	Push	-	62.8	94.2	1.26×10^2	1.57×10^2	1.88×10^2	2.20×10^2	2.51×10^2	2.83×10^2	3.14×10^2
	Pull	-	47.1	70.7	94.2	1.18×10^2	1.41×10^2	1.65×10^2	1.88×10^2	2.12×10^2	2.36×10^2
ø25	Push	-	98.2	1.47×10^2	1.96×10^2	2.45×10^2	2.95×10^2	3.44×10^2	3.93×10^2	4.42×10^2	4.91×10^2
	Pull	-	75.6	1.13×10^2	1.51×10^2	1.89×10^2	2.27×10^2	2.64×10^2	3.02×10^2	3.40×10^2	3.78×10^2
ø32	Push	1.21×10^2	1.61×10^2	2.41×10^2	3.22×10^2	4.02×10^2	4.83×10^2	5.63×10^2	6.43×10^2	7.24×10^2	8.04×10^2
	Pull	90.5	1.21×10^2	1.81×10^2	2.41×10^2	3.02×10^2	3.62×10^2	4.22×10^2	4.83×10^2	5.43×10^2	6.03×10^2
ø40	Push	1.88×10^2	2.51×10^2	3.77×10^2	5.03×10^2	6.28×10^2	7.54×10^2	8.80×10^2	1.01×10^3	1.13×10^3	1.26×10^3
	Pull	1.58×10^2	2.11×10^2	3.17×10^2	4.22×10^2	5.28×10^2	6.33×10^2	7.39×10^2	8.44×10^2	9.50×10^2	1.06×10^3
ø50	Push	2.95×10^2	3.93×10^2	5.89×10^2	7.85×10^2	9.82×10^2	1.18×10^3	1.37×10^3	1.57×10^3	1.77×10^3	1.96×10^3
	Pull	2.47×10^2	3.30×10^2	4.95×10^2	6.60×10^2	8.25×10^2	9.90×10^2	1.15×10^3	1.32×10^3	1.48×10^3	1.65×10^3
ø63	Push	4.68×10^2	6.23×10^2	9.35×10^2	1.25×10^3	1.56×10^3	1.87×10^3	2.18×10^3	2.49×10^3	2.81×10^3	3.12×10^3
	Pull	4.20×10^2	5.61×10^2	8.41×10^2	1.12×10^3	1.40×10^3	1.68×10^3	1.96×10^3	2.24×10^3	2.52×10^3	2.80×10^3

Switch specifications

Type/model No.	Proximity switch specifications	
Item	T2YLH/T2YLV	T3YLH/T3YLV
Applications	Dedicated for programmable controller	Programmable controller, relay
Output method	-	NPN output
Power supply voltage	-	10 to 28 VDC
Load voltage/current	10 to 30 VDC, 5 to 20 mA *3	30 VDC or less, 50 mA or less
Indicator lamp	Red/green LED (Lit when ON)	
Leakage current	1 mA or less	10 μA or less
Shock resistance	980 m/s^2	
Weight g	1 m:33 3 m:87 5 m:142	

*1 : Refer to Ending Page 1 for detailed switch specifications and dimensions.
*2 : Switches with connectors are also available. Refer to Ending Page 28.
*3 : The max. load current is 20 mA at 25°C. The current is lower than 20 mA if the operating ambient temperature around the switch is higher than 25°C. (5 to 10 mA at 60°C)

Cylinder weight

● STG-MG2/STG-MG3

Unit: kg

Item	Stroke length															Switch weight
Bore size (mm)	20	25	30	40	50	75	100	125	150	175	200	250	300	350	400	
ø20	0.68		0.76	0.84	0.91	1.16	1.36	1.55	1.74	1.93	2.13	2.58	2.97	3.35	3.74	Refer to the weight in the switch specifications.
ø25	0.96		1.06	1.17	1.27	1.64	1.90	2.16	2.44	2.70	2.96	3.60	4.12	4.66	5.18	
ø32		1.68			2.05	2.58	2.98	3.38	3.77	4.16	4.55	5.53	6.31	7.11	7.89	
ø40		1.93			2.34	2.79	3.19	3.61	4.02	4.43	4.84	5.85	6.68	7.51	8.33	
ø50		3.32			3.94	4.65	5.27	5.89	6.51	7.13	7.75	9.31	10.54	11.80	13.06	
ø63		4.15			4.89	5.71	6.44	7.17	7.91	8.64	9.37	11.16	12.61	14.07	15.52	

LCM
LCR
LCG
LCW
LCX
STM
STG
STS/STL
STR2
UCA2
ULK*
JSK/M2
JSG
JSC3/JSC4
USSD
UFCD
USC
UB
JSB3
LMB
LML
HCM
HCA
LBC
CAC4
UCAC2
CAC-N
UCAC-N
RCS2
RCC2
PCC
SHC
MCP
GLC
MFC
BBS
RRC
GRC
RV3*
NHS
HRL
LN
Hand
Chuk
MecHnd/Chuk
ShkAbs
FJ
FK
SpdContr
Ending

How to order

Without switch (built-in magnet for switch)

STG - M G2 - 32 ◯ - 25

With switch (built-in magnet for switch)

STG - M G2 - 32 ◯ - 25 - T2YLH - R

Model No.

Ⓐ Degree of protection level

Ⓑ Bore size

Ⓒ Port thread

Ⓓ Stroke length

Ⓔ Switch model No. *1

Ⓕ Switch quantity

Code	Description
Ⓐ Degree of protection level	
G2	Coolant proof scraper + packing NBR
G3	Coolant proof scraper + packing FKM
Ⓑ Bore size (mm)	
20	ø20
25	ø25
32	ø32
40	ø40
50	ø50
63	ø63
Ⓒ Port thread	
Blank	Rc thread
NN	NPT thread (made-to-order product)
GN	G thread (made-to-order product)
Ⓓ Stroke length (mm)	
Refer to the stroke length table on the following page	

Ⓔ Switch model No.

Axial lead wire	Radial lead wire	Contact	Voltage	Indicator	Lead wire
T2YLH*	T2YLV*	Proximity	DC	2-color display	2-wire
T3YLH*	T3YLV*				3-wire

* Lead wire length	
Blank	1 m (standard)
3	3 m (option)
5	5 m (option)

Ⓕ Switch quantity	
R	1 on rod side
H	1 on head side
D	2
T	3

⚠ Precautions for model No. selection

*1: Switches are shipped with the product. Contact CKD if assembling before shipment is necessary.

[Example of model No.]

STG-MG2-20-50-T2YLH-R

Model: Guided cylinder, double acting/coolant proof

Ⓐ Degree of protection level : Coolant proof scraper + packing NBR
Ⓑ Bore size : ø20 mm
Ⓒ Port thread : Rc thread
Ⓓ Stroke length : 50 mm
Ⓔ Switch model No. : Proximity T2YLH switch, lead wire length 1 m
Ⓕ Switch quantity : 1 on rod side

Ⓓ Stroke length

Stroke length (mm)		Applicable bore size					
		ø20	ø25	ø32	ø40	ø50	ø63
Standard stroke length	20	●	●				
	25			●	●	●	●
	30	●	●				
	40	●	●				
	50	●	●	●	●	●	●
	75	●	●	●	●	●	●
	100	●	●	●	●	●	●
	125	●	●	●	●	●	●
	150	●	●	●	●	●	●
	175	●	●	●	●	●	●
	200	●	●	●	●	●	●
	250	●	●	●	●	●	●
	300	●	●	●	●	●	●
	350	●	●	●	●	●	●
	400	●	●	●	●	●	●
Min. stroke length	*2	5(10)					
Custom stroke length	*1	In 5 mm increments					

*1: The total dimensions are the same as the longer standard stroke length.
*2: The value in ( ) is for type with switch.

How to order switch

SW - T2YLH

Switch model No.
(Item Ⓔ on page 384)

Note: Contact CKD when using
an environment-friendly T switch.

LCM
LCR
LCG
LCW
LCX
STM
STG
STS/STL
STR2
UCA2
ULK*
JSK/M2
JSG
JSC3/JSC4
USSD
UFCD
USC
UB
JSB3
LMB
LML
HCM
HCA
LBC
CAC4
UCAC2
CAC-N
UCAC-N
RCS2
RCC2
PCC
SHC
MCP
GLC
MFC
BBS
RRC
GRC
RV3*
NHS
HRL
LN
Hand
Chuk
MecHnd/Chuk
ShkAbs
FJ
FK
SpdContr
Ending

Internal structure and parts list

● STG-MG2/MG3

· ø20 to ø32

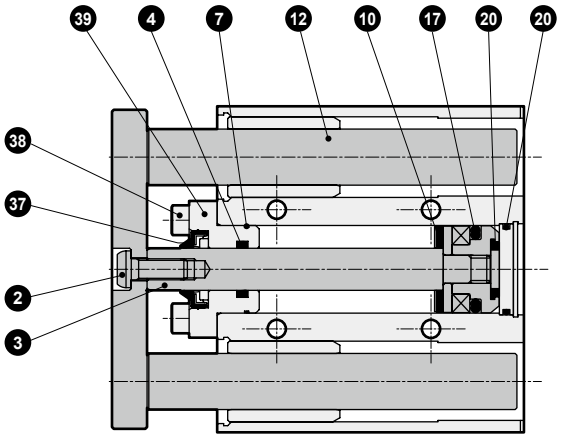

· ø40 to ø63

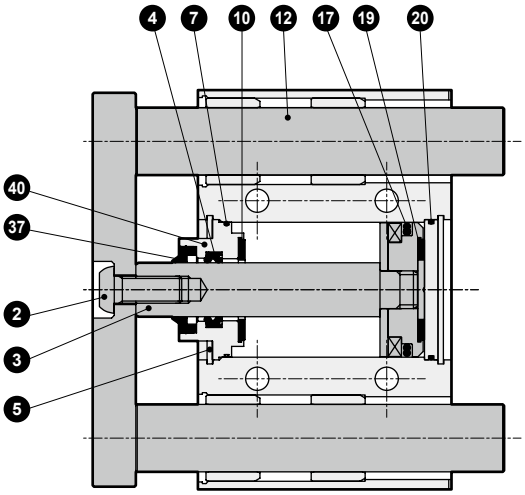

Parts list

* Parts other than those listed below are the same as those of double acting/single rod. Refer to pages 340 to 343.

No.	Part name		Material	Remarks	No.	Part name		Material	Remarks
2	Hexagon socket button head bolt		Stainless steel		17	Piston packing	G2	Nitrile rubber	
3	Piston rod		Stainless steel				G3	Fluoro rubber	
4	Rod packing	G2	Nitrile rubber		20	O-ring	G2	Nitrile rubber	
		G3	Fluoro rubber				G3	Fluoro rubber	
5	C type snap ring		Stainless steel		37	Scraper	G2	Nitrile rubber	
7	Metal gasket	G2	Nitrile rubber				G3	Fluoro rubber	
		G3	Fluoro rubber		38	Hexagon socket head cap screw		Stainless steel	
12	Guide rod		Stainless steel		39	Rod cover		Aluminum alloy	Alumite
14	Plug		Stainless steel		40	Rod metal		Aluminum alloy	Alumite

Repair parts list (Note: specify the kit No. when ordering repair parts.)

● STG-MG2 (packing material: nitrile rubber)

Bore size (mm)	Kit No.	Repair parts No.
ø20	STG-MG2-20K	4 7 10 17 19 20 37
ø25	STG-MG2-25K	
ø32	STG-MG2-32K	
ø40	STG-MG2-40K	
ø50	STG-MG2-50K	
ø63	STG-MG2-63K	

● STG-MG3 (packing material: fluoro rubber)

Bore size (mm)	Kit No.	Repair parts No.
ø20	STG-MG3-20K	4 7 10 17 19 20 37
ø25	STG-MG3-25K	
ø32	STG-MG3-32K	
ø40	STG-MG3-40K	
ø50	STG-MG3-50K	
ø63	STG-MG3-63K	

Dimensions

● STG-MG$^{2}_{3}$

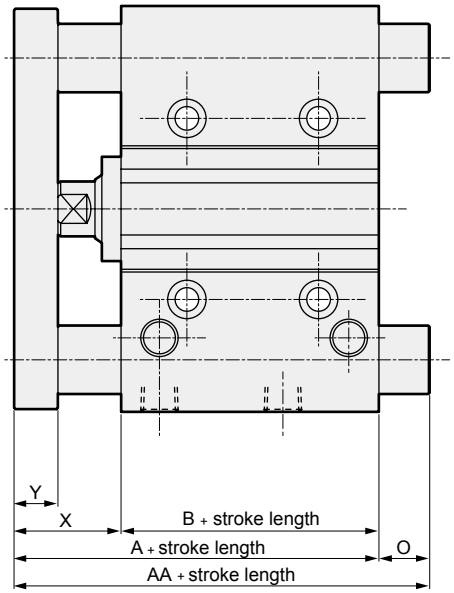

* Dimensions not listed below are the same as those of double acting/single rod on pages 345 and 346.
*1: When using a custom stroke length, the total dimensions are the same as the longer standard stroke length.

● STG-M-G2/G3

Code / Bore size (mm)	Standard stroke length	A	AA 50 st or less	AA Over 50 st to 200 st	AA Over 200 st	B	O 50 st or less	O Over 50 st to 200 st	O Over 200 st	X	Y
ø20	20,30,40,50,75,100,125,150,175 200,250,300,350,400	66	66	91	135	37	0	25	69	29 $^{0}_{-2}$	9.5
ø25		67.5	67.5	98	136	37.5	0	30.5	68.5	30 $^{0}_{-2}$	9.5
ø32	25,50,75,100,125,150,175 200,250,300,350,400	71.5	91	112	152	37.5	19.5	40.5	80.5	34 $^{0}_{-2}$	11.5
ø40		78	91	112	152	44	13	34	74	34 $^{0}_{-2}$	11.5
ø50		83	102	127	172	44	19	44	89	39 $^{0}_{-2}$	15.5
ø63		88	102	127	172	49	14	39	84	39 $^{0}_{-2}$	15.5

Guided cylinder, double acting/anti-spatter adherence

STG-$^{M}_{B}$G4 Series

● Bore size: ø40/ø50/ø63

JIS symbol

RoHS CAD

Specifications

Item	STG-$^{M}_{B}$G4		
Bore size mm	ø40	ø50	ø63
Actuation	Double acting/anti-spatter adherence		
Working fluid	Compressed air		
Max. working pressure MPa	1.0 (≈150 psi, 10 bar)		
Min. working pressure MPa	0.15 (≈22 psi, 1.5 bar)		
Proof pressure MPa	1.6 (≈230 psi, 16 bar)		
Ambient temperature °C	-10 (14°F) to 60 (140°F) (no freezing)		
Port size	Rc1/8	Rc1/4	
Stroke tolerance mm	+2.0 0		
Working piston speed mm/s	50 to 500		50 to 300
Cushion	With rubber cushion		
Lubrication	Not required (use turbine oil class 1 ISO VG32 if necessary for lubrication)		
Allowable absorbed energy J	0.627	0.980	1.560

Stroke

Bore size	Standard stroke (mm)	Max. stroke (mm)	Min. stroke (mm)	Min. stroke (mm)(switch)
ø40	25/50/75/100/125 150/175/200/250 300/350/400	400	5	10
ø50				
ø63				*2

*1: The custom stroke is available in 5 mm increments. However, the total length is the same as that of the next longer standard stroke.
*2: For types with one or two switches.

Theoretical thrust table

(Unit: N)

Bore size (mm)	Operating direction	0.15	0.2	0.3	0.4	0.5	0.6	0.7	0.8	0.9	1.0
ø40	Push	$1.88x10^2$	$2.51x10^2$	$3.77x10^2$	$5.03x10^2$	$6.28x10^2$	$7.54x10^2$	$8.80x10^2$	$1.01x10^3$	$1.13x10^3$	$1.26x10^3$
	Pull	$1.58x10^2$	$2.11x10^2$	$3.17x10^2$	$4.22x10^2$	$5.28x10^2$	$6.33x10^2$	$7.39x10^2$	$8.44x10^2$	$9.50x10^2$	$1.06x10^3$
ø50	Push	$2.95x10^2$	$3.93x10^2$	$5.89x10^2$	$7.85x10^2$	$9.82x10^2$	$1.18x10^3$	$1.37x10^3$	$1.57x10^3$	$1.77x10^3$	$1.96x10^3$
	Pull	$2.47x10^2$	$3.30x10^2$	$4.95x10^2$	$6.60x10^2$	$8.25x10^2$	$9.90x10^2$	$1.15x10^3$	$1.32x10^3$	$1.48x10^3$	$1.65x10^3$
ø63	Push	$4.68x10^2$	$6.23x10^2$	$9.35x10^2$	$1.25x10^3$	$1.56x10^3$	$1.87x10^3$	$2.18x10^3$	$2.49x10^3$	$2.81x10^3$	$3.12x10^3$
	Pull	$4.20x10^2$	$5.61x10^2$	$8.41x10^2$	$1.12x10^3$	$1.40x10^3$	$1.68x10^3$	$1.96x10^3$	$2.24x10^3$	$2.52x10^3$	$2.80x10^3$

LCM
LCR
LCG
LCW
LCX
STM
STG
STS/STL
STR2
UCA2
ULK*
JSK/M2
JSG
JSC3/JSC4
USSD
UFCD
USC
UB
JSB3
LMB
LML
HCM
HCA
LBC
CAC4
UCAC2
CAC-N
UCAC-N
RCS2
RCC2
PCC
SHC
MCP
GLC
MFC
BBS
RRC
GRC
RV3*
NHS
HRL
LN
Hand
Chuk
MecHnd/Chuk
ShkAbs
FJ
FK
SpdContr
Ending

Switch specifications

Item	Proximity 2-wire	
	T2YD	T2YDT
Applications	Dedicated for programmable controller	
Indicator	Red/green LED (Lit when ON)	
Load voltage	24 VDC ±10%	
Load current	DC5 to 20 mA	
Internal voltage drop	6V or less	
Leakage current	1.0 mA or less	
Output delay time *1 (ON delay, OFF delay)	60 ms or less	
Lead wire length *2	1 m (oil-resistant vinyl cabtyre cable 2-conductor 0.5 mm^2) (standard)	1 m (flame-resistant vinyl cabtyre cable 2-conductor 0.5 mm^2) (option)
Insulation resistance	100 MΩ and over at 500 VDC megger	
Withstand voltage	No failure after 1 minute of 1,000 VAC application.	
Shock resistance	980 m/s^2	
Ambient temperature	-10 to +60°C	
Degree of protection	JIS C0920 (water-tight), IEC standards IP67, oil resistance	
Weight g	1 m:61 3 m:166 5 m:272	

*1: Indicates the time from magnetic sensor detection of the piston magnet until switch output.
*2: 3 m and 5 m lead wires are available as options.
*3: This switch cannot be used in DC magnetic field.
*4: Refer to Ending Page 1 for detailed switch specifications and dimensions.
*5: Switches with connectors are also available. Refer to Ending Page 28.

Cylinder weight

● STG-MG4

Unit: kg

Item	Stroke												Switch weight
Bore size (mm)	25	50	75	100	125	150	175	200	250	300	350	400	
ø40	2.03	2.44	2.89	3.29	3.71	4.12	4.53	4.94	5.95	6.78	7.61	8.43	Refer to the weight in the switch specifications.
ø50	3.47	4.09	4.80	5.42	6.04	6.66	7.28	7.90	9.46	10.69	11.95	13.21	
ø63	4.31	5.05	5.87	6.60	7.33	8.07	8.80	9.53	11.32	12.77	14.23	15.68	

● STG-BG4

Unit: kg

Item	Stroke												Switch weight
Bore size (mm)	25	50	75	100	125	150	175	200	250	300	350	400	
ø40	1.88	2.23	2.70	3.05	3.46	3.81	4.16	4.51	5.26	5.96	6.66	7.36	Refer to the weight in the switch specifications.
ø50	3.23	3.76	4.49	5.02	5.64	6.18	6.71	7.24	8.44	9.49	10.59	11.66	
ø63	4.07	4.71	5.56	6.20	6.93	7.57	8.22	8.86	10.25	11.61	12.87	14.13	

LCM
LCR
LCG
LCW
LCX
STM
STG
STS/STL
STR2
UCA2
ULK*
JSK/M2
JSG
JSC3/JSC4
USSD
UFCD
USC
UB
JSB3
LMB
LML
HCM
HCA
LBC
CAC4
UCAC2
CAC-N
UCAC-N
RCS2
RCC2
PCC
SHC
MCP
GLC
MFC
BBS
RRC
GRC
RV3*
NHS
HRL
LN
Hand
Chuk
MecHnd/Chuk
ShkAbs
FJ
FK
SpdContr
Ending

How to order

Without switch (built-in magnet for switch)

STG - M G4 - 40 - ◯ - 25

With switch (built-in magnet for switch)

STG - M G4 - 40 - ◯ - 25 - T2H - R

Model No. | Anti-spatter adherence | Ⓐ Bearing | Ⓑ Bore size | Ⓒ Port thread | Ⓓ Stroke | Ⓔ Switch model No. *1 | Ⓕ Switch quantity

Code	Description
Ⓐ Bearing	
M	Metal bush bearing
B	Ball bearing
Ⓑ Bore size (mm)	
40	ø40
50	ø50
63	ø63
Ⓒ Port thread	
Blank	Rc thread
NN	NPT thread (made-to-order product)
GN	G thread (made-to-order product)
Ⓓ Stroke (mm)	
Refer to the stroke table on the following page	

Ⓔ Switch model No.

Straight lead wire	Contact	Voltage	Indicator	Lead wire
T2YD*	Proximity	DC	Strong magn field proof (For AC magnetic field)	2-wire
T2YDT*				

*** Lead wire length**	
Blank	1 m (standard)
3	3 m (option)
5	5 m (option)

Ⓕ Switch quantity	
R	1 on rod side
H	1 on head side
D	2
T	3

⚠ Precautions for model No. selection

*1: Switches are shipped with the product. Contact CKD if assembling before shipment is necessary.

[Example of model No.]

STG-BG4-50-100-T2YD3-D

Model: Guided cylinder, double acting/anti-spatter adherence

Ⓐ Bearing : Ball bearing
Ⓑ Bore size : ø50 mm
Ⓒ Port thread : Rc thread
Ⓓ Stroke : 100 mm
Ⓔ Switch model No.: Proximity switch T2YD, lead wire length 3 m
Ⓕ Switch quantity : 2

LCM
LCR
LCG
LCW
LCX
STM
STG
STS/STL
STR2
UCA2
ULK*
JSK/M2
JSG
JSC3/JSC4
USSD
UFCD
USC
UB
JSB3
LMB
LML
HCM
HCA
LBC
CAC4
UCAC2
CAC-N
UCAC-N
RCS2
RCC2
PCC
SHC
MCP
GLC
MFC
BBS
RRC
GRC
RV3*
NHS
HRL
LN
Hand
Chuk
MecHnd/Chuk
ShkAbs
FJ
FK
SpdContr
Ending

Ⓓ Stroke

Stroke (mm)		Applicable bore size		
		ø40	ø50	ø63
Standard stroke	25	●	●	●
	50	●	●	●
	75	●	●	●
	100	●	●	●
	125	●	●	●
	150	●	●	●
	175	●	●	●
	200	●	●	●
	250	●	●	●
	300	●	●	●
	350	●	●	●
	400	●	●	●
Min. stroke	*2	5(10)		
Custom stroke	*1	In 5 mm increments		

*1: The total dimensions are the same as the longer standard stroke.
*2: The value in ( ) is for type with switch.

How to order switch

SW - T2YD

Switch model No.
(Item Ⓔ on page 390)

LCM
LCR
LCG
LCW
LCX
STM
STG
STS/STL
STR2
UCA2
ULK*
JSK/M2
JSG
JSC3/JSC4
USSD
UFCD
USC
UB
JSB3
LMB
LML
HCM
HCA
LBC
CAC4
UCAC2
CAC-N
UCAC-N
RCS2
RCC2
PCC
SHC
MCP
GLC
MFC
BBS
RRC
GRC
RV3*
NHS
HRL
LN
Hand
Chuk
MecHnd/Chuk
ShkAbs
FJ
FK
SpdContr
Ending

Internal structure and parts list

● STG-MG4

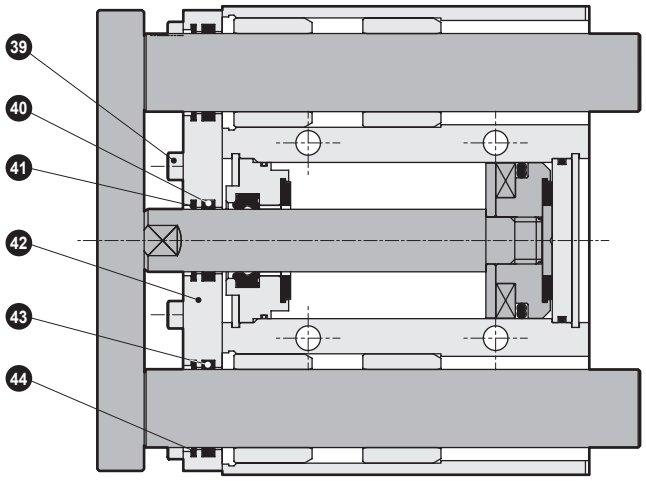

● STG-BG4

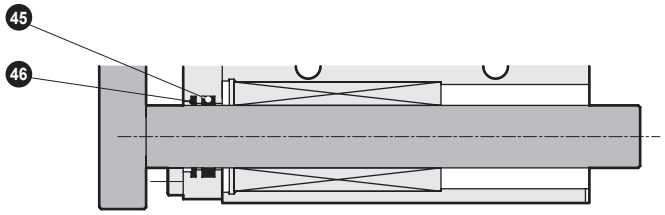

Parts list

* Parts other than those listed below are the same as those of double acting/single rod. Refer to pages 340 to 343.

No.	Part name	Material	Remarks	No.	Part name	Material	Remarks
39	Hexagon socket head cap screw	Alloy steel	Zinc chromate	43	Lube keeping structure	Special rubber	
40	Lube keeping structure	Special rubber		44	Coil scraper	Phosphor bronze	
41	Coil scraper	Phosphor bronze		45	Lube keeping structure	Special rubber	
42	Adaptor	Aluminum alloy	Alumite	46	Coil scraper	Phosphor bronze	

Dimensions

● STG-$^{M}_{B}$G4

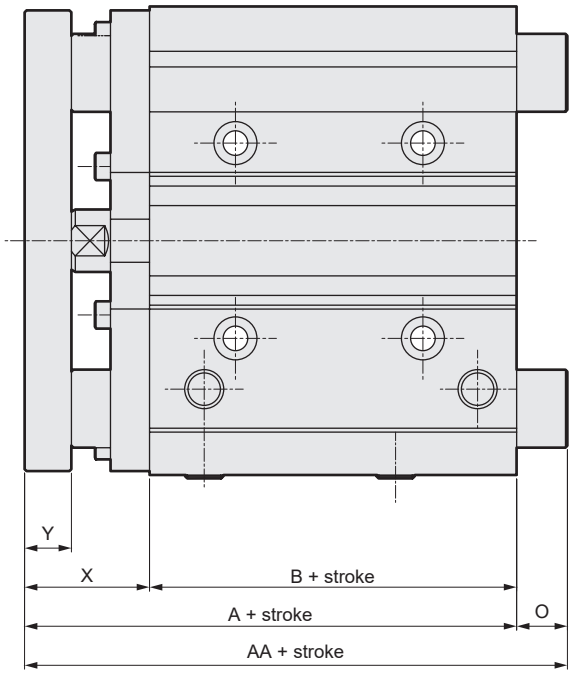

* Dimensions not listed below are the same as those on page 346 (double acting/single rod).
*1: When using a custom stroke, the total dimensions are the same as the longer standard stroke.

● STG-MG4

Code / Bore size (mm)	Standard stroke	A	AA			B	O			X	Y
			50 st or less	Over 50 st to 200 st	Over 200 st		50 st or less	Over 50 st to 200 st	Over 200 st		
ø40	25,50,75,100,125,150,175 200,250,300,350,400	76	89	110	150	44	13	34	74	32^{0}_{-2}	11.5
ø50		82	101	126	171	44	19	44	89	38^{0}_{-2}	15.5
ø63		87	101	126	171	49	14	39	84	38^{0}_{-2}	15.5

● STG-BG4

Code / Bore size (mm)	Standard stroke	A	AA				B	O				X	Y
			30 st or less	Over 30 st to 100 st	Over 100 st to 200 st	Over 200 st		30 st or less	Over 30 st to 100 st	Over 100 st to 200 st	Over 200 st		
ø40	25,50,75,100,125,150,175 200,250,300,350,400	76	89	108	128	150	44	13	32	52	74	32^{0}_{-2}	11.5
ø50		82	101	124	144	171	44	19	42	62	89	38^{0}_{-2}	15.5
ø63		87	101	124	144	171	49	14	37	57	84	38^{0}_{-2}	15.5

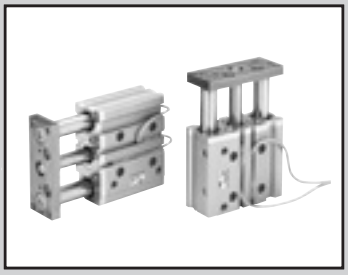

Guided cylinder double acting/single rod/environment-resistant scraper

STG-MG5 Series

● Bore size: ø20/ø25/ø32/ø40/ø50/ø63/ø80/ø100

JIS symbol 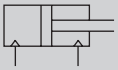

RoHS

Specifications

* Made-to-order product.

Item		STG-MG5							
Bore size	mm	ø20	ø25	ø32	ø40	ø50	ø63	ø80	ø100
Actuation		Double acting							
Working fluid		Compressed air							
Max. working pressure	MPa	1.0 (≈150 psi, 10 bar)							
Min. working pressure	MPa	0.25 (≈36 psi, 2.5 bar)					0.2 (≈29 psi, 2 bar)		
Proof pressure	MPa	1.6 (≈230 psi, 16 bar)							
Ambient temperature	°C	-10 (14°F) to 60 (140°F) (no freezing)							
Port size		Rc1/8				Rc1/4		Rc3/8	
Stroke tolerance	mm	+2.0 0							
Working piston speed	mm/s	50 to 500					50 to 300		
Cushion		With rubber cushion							
Lubrication		Not required (use turbine oil class 1 ISO VG32 if necessary for lubrication)							
Allowable absorbed energy	J	0.157	0.157	0.401	0.627	0.980	1.560	2.510	3.92

Stroke

Bore size	Standard stroke (mm)	Max. stroke (mm)	Min. stroke (mm)	Min. stroke with switch (mm)
ø20	20/30/40/50/75/100/125/150/ 175/200/250/300/350/400	400	5	5(10) *2
ø25				
ø32	25/50/75/100/125/150/175/ 200/250/300/350/400			
ø40				
ø50				
ø63				
ø80				
ø100				

*1: The custom stroke is available in 5 mm increments. However, the total dimensions are the same as the longer standard stroke.
*2: For types with one or two switches. The value in ( ) is the min. stroke for switches of the 2-color LED and AC magnetic field proof.

Theoretical thrust table (double acting)

(Unit: N)

Bore size (mm)	Operating direction	Working pressure MPa									
		0.2	0.25	0.3	0.4	0.5	0.6	0.7	0.8	0.9	1.0
ø20	Push	-	78.5	94.2	$1.26x10^2$	$1.57x10^2$	$1.88x10^2$	$2.20x10^2$	$2.51x10^2$	$2.83x10^2$	$3.14x10^2$
	Pull	-	58.9	70.7	94.2	$1.18x10^2$	$1.41x10^2$	$1.65x10^2$	$1.88x10^2$	$2.12x10^2$	$2.36x10^2$
ø25	Push	-	$1.23x10^2$	$1.47x10^2$	$1.96x10^2$	$2.45x10^2$	$2.95x10^2$	$3.44x10^2$	$3.93x10^2$	$4.42x10^2$	$4.91x10^2$
	Pull	-	94.4	$1.13x10^2$	$1.51x10^2$	$1.89x10^2$	$2.27x10^2$	$2.64x10^2$	$3.02x10^2$	$3.40x10^2$	$3.78x10^2$
ø32	Push	-	$2.01x10^2$	$2.41x10^2$	$3.22x10^2$	$4.02x10^2$	$4.83x10^2$	$5.63x10^2$	$6.43x10^2$	$7.24x10^2$	$8.04x10^2$
	Pull	-	$1.51x10^2$	$1.81x10^2$	$2.41x10^2$	$3.02x10^2$	$3.62x10^2$	$4.22x10^2$	$4.83x10^2$	$5.43x10^2$	$6.03x10^2$
ø40	Push	-	$3.14x10^2$	$3.77x10^2$	$5.03x10^2$	$6.28x10^2$	$7.54x10^2$	$8.80x10^2$	$1.01x10^3$	$1.13x10^3$	$1.26x10^3$
	Pull	-	$2.64x10^2$	$3.17x10^2$	$4.22x10^2$	$5.28x10^2$	$6.33x10^2$	$7.39x10^2$	$8.44x10^2$	$9.50x10^2$	$1.06x10^3$
ø50	Push	-	$4.91x10^2$	$5.89x10^2$	$7.85x10^2$	$9.82x10^2$	$1.18x10^3$	$1.37x10^3$	$1.57x10^3$	$1.77x10^3$	$1.96x10^3$
	Pull	-	$4.12x10^2$	$4.95x10^2$	$6.60x10^2$	$8.25x10^2$	$9.90x10^2$	$1.15x10^3$	$1.32x10^3$	$1.48x10^3$	$1.65x10^3$
ø63	Push	$6.23x10^2$	$7.79x10^2$	$9.35x10^2$	$1.25x10^3$	$1.56x10^3$	$1.87x10^3$	$2.18x10^3$	$2.49x10^3$	$2.81x10^3$	$3.12x10^3$
	Pull	$5.61x10^2$	$7.01x10^2$	$8.41x10^2$	$1.12x10^3$	$1.40x10^3$	$1.68x10^3$	$1.96x10^3$	$2.24x10^3$	$2.52x10^3$	$2.80x10^3$
ø80	Push	$1.01x10^3$	$1.26x10^3$	$1.51x10^3$	$2.01x10^3$	$2.51x10^3$	$3.02x10^3$	$3.52x10^3$	$4.02x10^3$	$4.52x10^3$	$5.03x10^3$
	Pull	$9.07x10^2$	$1.13x10^3$	$1.36x10^3$	$1.81x10^3$	$2.27x10^3$	$2.72x10^3$	$3.17x10^3$	$3.63x10^3$	$4.08x10^3$	$4.54x10^3$
ø100	Push	$1.57x10^3$	$1.96x10^3$	$2.36x10^3$	$3.14x10^3$	$3.93x10^3$	$4.71x10^3$	$5.50x10^3$	$6.28x10^3$	$7.07x10^3$	$7.85x10^3$
	Pull	$1.43x10^3$	$1.79x10^3$	$2.14x10^3$	$2.86x10^3$	$3.57x10^3$	$4.29x10^3$	$5.00x10^3$	$5.72x10^3$	$6.43x10^3$	$7.15x10^3$

Switch specifications

● 1-color/2-color LED/for AC magnetic field

Item	Proximity 2-wire	Proximity 2-wire			Proximity 3-wire				Reed 2-wire							Proximity 2-wire
	T1H/T1V	T2H/T2V/ T2JH/T2JV	T2YH/ T2YV	T2WH/ T2WV	T3H/T3V	T3PH/ T3PV	T3YH/ T3YV	T3WH/ T3WV	T0H/T0V		T5H/T5V		T8H/T8V			T2YD(*4) T2YDT
Applications	For programmable controller, relay, compact solenoid valve	Dedicated for programmable controller			For programmable controller, relay				For programmable controller, relay		For programmable controller, relay, IC circuit (no indicator lamp), serial connection		For programmable controller, relay			For programmable controller
Output method	-				NPN output	PNP output	NPN output	NPN output	-							
Pwr. supp. V.	-				10 to 28 VDC				-							
Load voltage	85 to 265 VAC	10 to 30 VDC		24 VDC ±10%	30 VDC or less				12/24 VDC	100/110 VAC	5/12/24 VDC	100/110 VAC	12/24 VDC	110 VAC	220 VAC	24 VDC ±10%
Load current	5 to 100 mA	5 to 20 mA (*3)			100 mA or less		50 mA or less		5 to 50 mA	7 to 20 mA	≤50 mA	≤20 mA	5 to 50 mA	7 to 20 mA	7 to 10 mA	5 to 20 mA
Indicator	LED (Lit when ON)	LED (Lit when ON)	Red/green LED (Lit when ON)	Red/green LED (Lit when ON)	LED (Lit when ON)	Yellow LED (Lit when ON)	Red/green LED (Lit when ON)	Red/green LED (Lit when ON)	LED (Lit when ON)		No indicator lamp		LED (Lit when ON)			Red/green LED (Lit when ON)
Leakage current	≤ 1 mA at 100 VAC, ≤ 2 mA at 200 VAC	1 mA or less			10 μA or less				0 mA							1 mA or less
Weight g	1 m:33 3 m:87 5 m:142	1 m:18 3 m:49 5 m:80	1 m:33 3 m:87 5 m:142	1 m:18 3 m:49 5 m:80	1 m:18 3 m:49 5 m:80		1 m:33 3 m:87 5 m:142	1 m:18 3 m:49 5 m:80	1 m:18 3 m:49 5 m:80				1 m:33 3 m:87 5 m:142			1 m:61 3 m:166 5 m:272

*1: Refer to Ending Page 1 for detailed switch specifications and dimensions.
*2: Switches other than the above models, such as switches with connectors, are also available. Refer to Ending Page 1.
*3: The max. load current is 20 mA at 25°C. The current is lower than 20 mA if the operating ambient temperature around the switch is higher than 25˚C. (5 to 10 mA at 60°C)
*4: AC magnetic field proof switch (T2YD/T2YDT) cannot be used in DC magnetic fields.

Cylinder weight table

(Unit: kg)

Item	Stroke															Switch weight
Bore size (mm)	20	25	30	40	50	75	100	125	150	175	200	250	300	350	400	
ø20	0.68		0.75	0.83	0.91	1.16	1.35	1.55	1.73	1.93	2.12	2.58	2.96	3.34	3.73	Refer to the weight in the switch specifications.
ø25	0.95		1.05	1.16	1.26	1.63	1.89	2.16	2.43	2.69	2.95	3.59	4.12	4.65	5.17	
ø32		1.73			2.10	2.63	3.02	3.43	3.82	4.21	4.60	5.58	6.36	7.15	7.94	
ø40		2.00			2.41	2.86	3.27	3.68	4.09	4.51	4.91	5.92	6.76	7.58	8.41	
ø50		3.44			4.06	4.77	5.39	6.01	6.63	7.25	7.87	9.44	10.66	11.92	13.18	
ø63		4.31			5.05	5.87	6.60	7.33	8.07	8.80	9.53	11.32	12.77	14.23	15.68	
ø80		7.65			8.75	10.14	11.23	12.33	13.43	14.53	15.63	18.43	20.55	22.73	24.93	
ø100		11.04			12.38	14.09	15.43	16.76	18.10	19.44	20.78	24.07	26.74	29.42	32.09	

LCM
LCR
LCG
LCW
LCX
STM
STG
STS/STL
STR2
UCA2
ULK*
JSK/M2
JSG
JSC3/JSC4
USSD
UFCD
USC
UB
JSB3
LMB
LML
HCM
HCA
LBC
CAC4
UCAC2
CAC-N
UCAC-N
RCS2
RCC2
PCC
SHC
MCP
GLC
MFC
BBS
RRC
GRC
RV3*
NHS
HRL
LN
Hand
Chuk
MecHnd/Chuk
ShkAbs
FJ
FK
SpdContr
Ending

How to order

Without switch (built-in magnet for switch)

STG - M G5 - 32 ◯ - 25

With switch (built-in magnet for switch)

STG - M G5 - 32 ◯ - 25 - T2H - R

Model No.

Metal bush bearing

Environment-resistant scraper

Ⓐ Bore size

Ⓑ Port thread

Ⓒ Stroke

Ⓓ Switch model No. *1

Ⓔ Switch quantity

Code	Description
Ⓐ Bore size (mm)	
20	ø20
25	ø25
32	ø32
40	ø40
50	ø50
63	ø63
80	ø80
100	ø100
Ⓑ Port thread	
Blank	Rc thread
NN	NPT thread (made-to-order product)
GN	G thread (made-to-order product)
Ⓒ Stroke (mm)	
Refer to the stroke table on the following page.	

Ⓓ Switch model No.

Straight lead wire	L-shaped lead wire	Contact	Voltage AC	Voltage DC	Indicator	Lead wire
TOH*	T0V*	Reed	●	●	1-color LED	2-wire
T5H*	T5V*	Reed	●	●	No indicator lamp	2-wire
T8H*	T8V*	Reed	●	●	1-color LED	2-wire
T1H*	T1V*	Proximity	●		1-color LED	2-wire
T2H*	T2V*	Proximity		●	1-color LED	2-wire
T3H*	T3V*	Proximity		●	1-color LED	3-wire
T3PH*	T3PV*	Proximity		●	1-color LED	3-wire
T2WH*	T2WV*	Proximity		●	2-color LED	2-wire
T2YH*	T2YV*	Proximity		●	2-color LED	2-wire
T3WH*	T3WV*	Proximity		●	2-color LED	3-wire
T3YH*	T3YV*	Proximity		●	2-color LED	3-wire
T2JH*	T2JV*	Proximity		●	1-color LED off-delay	2-wire
T2YD*	-	Proximity		●	2-color LED AC magnetic field	2-wire
T2YDT*	-	Proximity		●	2-color LED AC magnetic field	2-wire

* Lead wire length	
Blank	1 m (standard)
3	3 m (option)
5	5 m (option)

Ⓔ Switch quantity	
R	1 on rod side
H	1 on head side
D	2
T	3

Precautions for model No. selection

*1: Switches are shipped with the product.
Contact CKD if assembling before shipment is necessary.

[Example of model No.]

STG-MG5-40-75-T0H-D

Model: Guided cylinder double acting/single rod/environment-resistant scraper

Ⓐ Bore size : ø40 mm
Ⓑ Port thread : Rc thread
Ⓒ Stroke : 75 mm
Ⓓ Switch model No. : Reed T0H switch
Lead wire length 1 m
Ⓔ Switch quantity : 2

Ⓒ Stroke

Stroke (mm)		Applicable bore size							
		ø20	ø25	ø32	ø40	ø50	ø63	ø80	ø100
Standard stroke	10								
	20	●	●						
	25			●	●	●	●	●	●
	30	●	●						
	40	●	●						
	50	●	●	●	●	●	●	●	●
	75	●	●	●	●	●	●	●	●
	100	●	●	●	●	●	●	●	●
	125	●	●	●	●	●	●	●	●
	150	●	●	●	●	●	●	●	●
	175	●	●	●	●	●	●	●	●
	200	●	●	●	●	●	●	●	●
	250	●	●	●	●	●	●	●	●
	300	●	●	●	●	●	●	●	●
	350	●	●	●	●	●	●	●	●
	400	●	●	●	●	●	●	●	●
Min. stroke (mm) *2		5 (10)							
Custom stroke *1		In 5 mm increments							

*1: The total dimensions are the same as the longer standard stroke.
*2: The value in ( ) is the min. stroke for switches of the 2-color LED and AC magnetic field proof.

How to order switch

SW - T0V

Switch model No.
(Item Ⓓ on page 396)

Note: Contact CKD when using an environment-friendly T-switch.

Internal structure and parts list (STG-MG5-20 to 63)

● ø20, ø25

50 stroke length or less

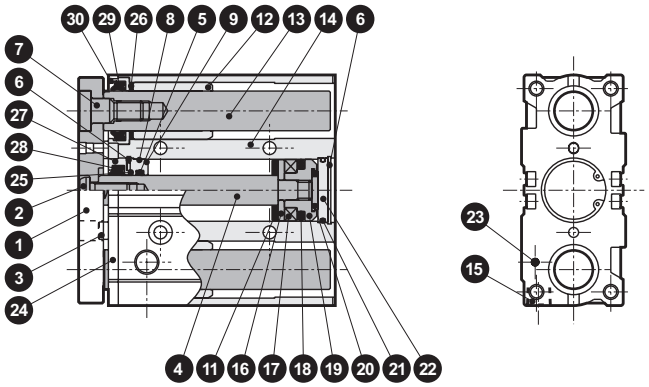

Over 50 to 200 stroke length

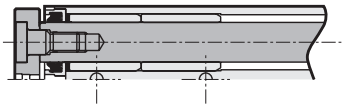

Over 200 mm stroke length

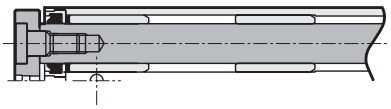

● ø32 to ø63

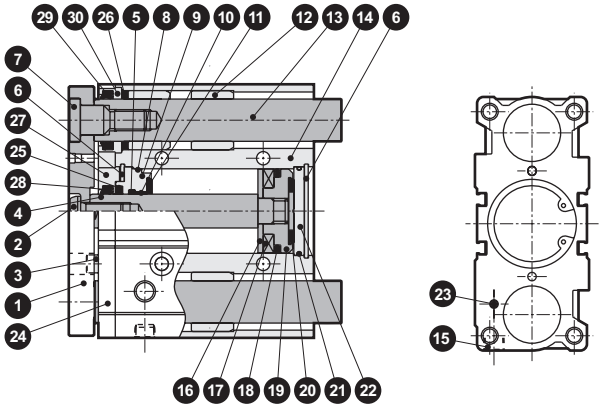

Main parts list

No.	Part name	Material	Remarks	No.	Part name	Material	Remarks
1	End plate	Steel	Nickeling	15	Plug	Copper alloy or steel	
2	Hexagon socket button head bolt	Steel	Zinc chromate	16	Spacer	Aluminum alloy	
3	Hexagon socket head cap screw	Steel	Zinc chromate	17	Magnet		
4	Piston rod	Stainless steel (ø20 to ø25)	Industrial chrome plating	18	Piston packing	Nitrile rubber	
		Steel (ø32 to ø63)	Industrial chrome plating	19	Piston	Aluminum alloy	
5	Rod packing	Nitrile rubber		20	Cushion rubber	Urethane rubber	
6	C-snap ring	Steel	Zinc phosphate	21	O-ring	Nitrile rubber	
7	Bolt	Steel	Zinc chromate	22	Base plate	Aluminum alloy	Chromate
8	Metal gasket	Nitrile rubber		23	Hexagon socket set screw	Stainless steel	
9	Rod metal	Special aluminum alloy (ø20 to ø32)	Alumite	24	Adaptor plate	Aluminum alloy	Alumite
		Aluminum alloy (ø40 to ø63)	Chromate	25	Lube keeping structure	Special rubber	
10	Bush	Oiles drymet		26	Lube keeping structure	Special rubber	
11	Cushion rubber	Urethane rubber		27	Holder R	Aluminum alloy	Chromate
12	Metal	Oil-impregnated copper alloy bearing		28	Scraper	Nitrile rubber	
13	Guide rod	Steel	Industrial chrome plating	29	Scraper	Nitrile rubber	
14	Cylinder body	Aluminum alloy	Hard alumite	30	Holder G	Aluminum alloy	Chromate

Repair parts list

Bore size (mm)	Kit No.	Repair parts No.
ø20	STG-MG5-20K	5 8 11 18 20 21 25 26 28 29
ø25	STG-MG5-25K	
ø32	STG-MG5-32K	
ø40	STG-MG5-40K	
ø50	STG-MG5-50K	
ø63	STG-MG5-63K	

Internal structure and parts list (STG-MG5-80 to 100)

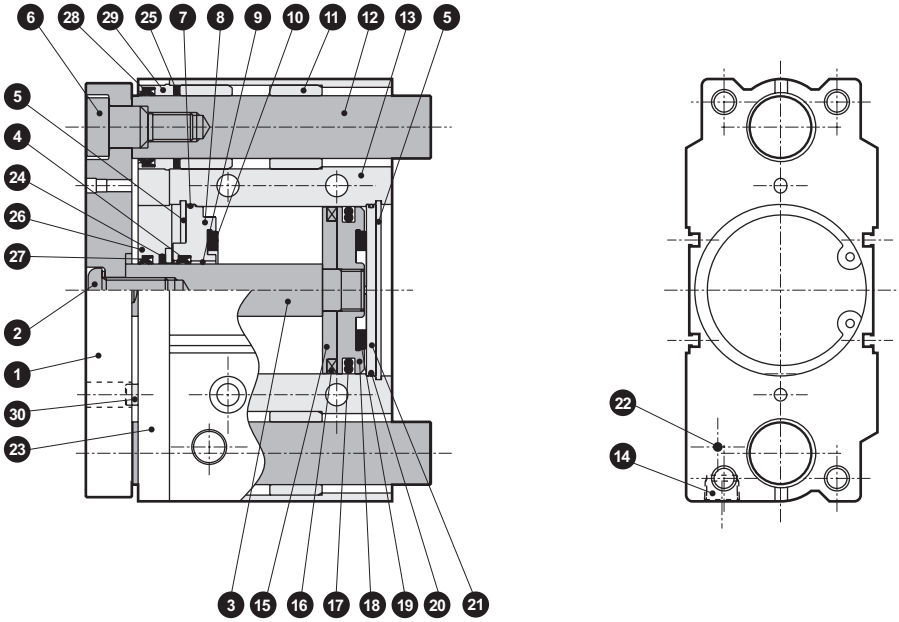

Main parts list

No.	Part name	Material	Remarks	No.	Part name	Material	Remarks
1	End plate	Steel	Nickeling	17	Piston packing	Nitrile rubber	
2	Hexagon socket button head bolt	Steel	Zinc chromate	18	Piston	Aluminum alloy	
3	Piston rod	Steel	Industrial chrome plating	19	Cushion rubber	Urethane rubber	
4	Rod packing	Nitrile rubber		20	O-ring	Nitrile rubber	
5	C-snap ring	Steel	Zinc phosphate	21	Base plate	Aluminum alloy (ø80)	Chromate
6	Bolt	Steel	Zinc chromate			Steel (ø100)	Zinc chromate
7	Metal gasket	Nitrile rubber		22	Hexagon socket set screw (ø80)	Stainless steel	
8	Rod metal	Aluminum alloy	Chromate		Plug (ø100)	Steel	Nickeling
9	Bush	Oiles drymet		23	Adaptor plate	Aluminum alloy	Alumite
10	Cushion rubber	Urethane rubber		24	Lube keeping structure	Special rubber	
11	Metal	Oil-impregnated copper alloy bearing		25	Lube keeping structure	Special rubber	
12	Guide rod	Steel	Industrial chrome plating	26	Holder R	Aluminum alloy	Chromate
13	Cylinder body	Aluminum alloy	Hard alumite	27	Scraper	Nitrile rubber	
14	Plug	Steel		28	Scraper	Nitrile rubber	
15	Spacer	Aluminum alloy		29	Holder G	Aluminum alloy	Chromate
16	Magnet			30	Hexagon socket head cap screw	Steel	Zinc chromate

Repair parts list

Bore size (mm)	Kit No.	Repair parts No.
ø80	STG-MG5-80K	4 7 10 17 19
ø100	STG-MG5-100K	20 24 25 27 28

LCM
LCR
LCG
LCW
LCX
STM
STG
STS/STL
STR2
UCA2
ULK*
JSK/M2
JSG
JSC3/JSC4
USSD
UFCD
USC
UB
JSB3
LMB
LML
HCM
HCA
LBC
CAC4
UCAC2
CAC-N
UCAC-N
RCS2
RCC2
PCC
SHC
MCP
GLC
MFC
BBS
RRC
GRC
RV3*
NHS
HRL
LN
Hand
Chuk
MecHnd/Chuk
ShkAbs
FJ
FK
SpdContr
Ending

Dimensions (ø20, ø25)

● STG-MG5-20, 25

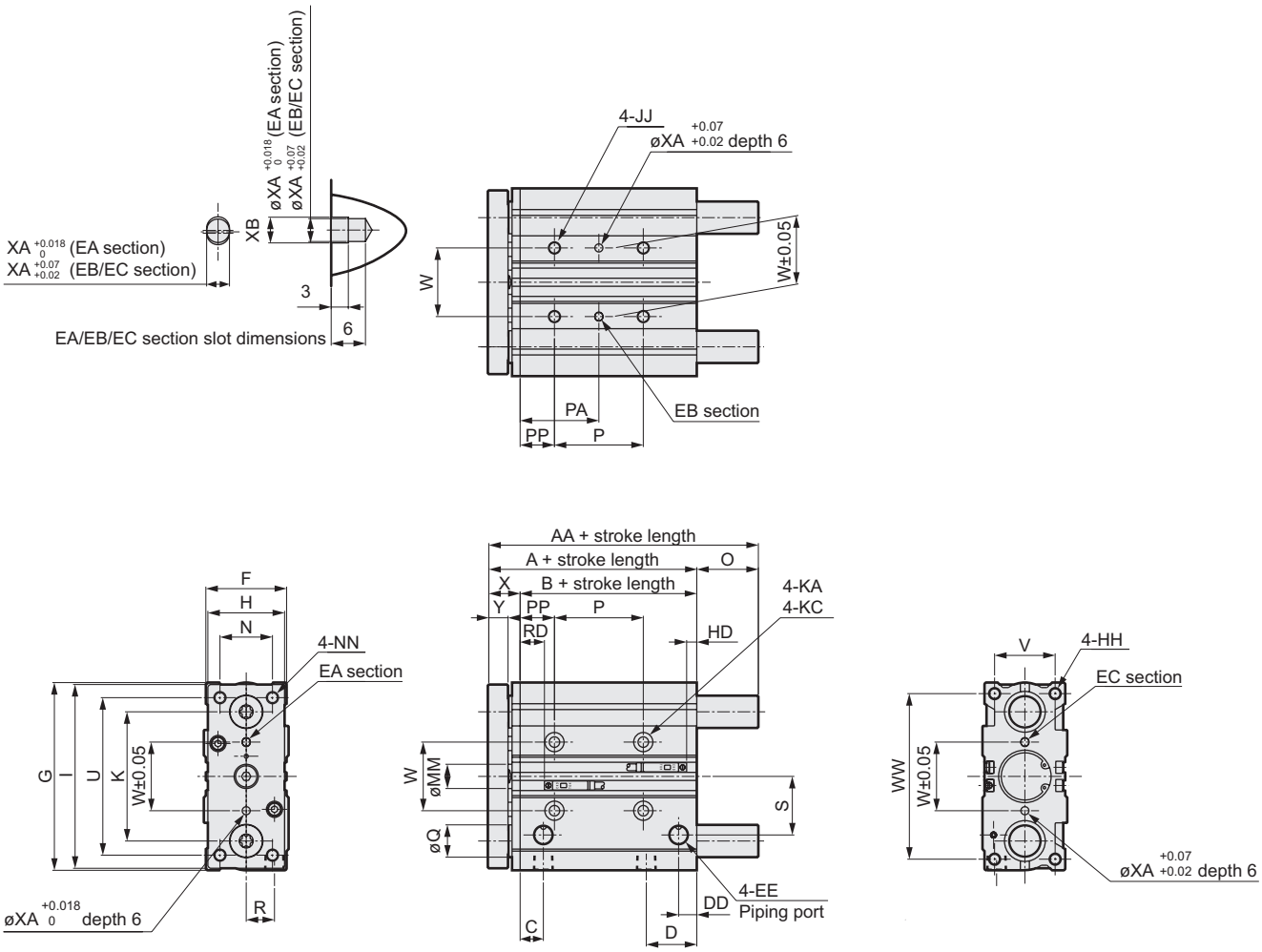

*1: When using a custom stroke, the total dimensions are the same as the longer standard stroke.

Code / Bore size	Standard stroke (mm)	A	B	C	D	DD	EE	F	G	H	HH	I	JJ
ø20	20,30,40,50,75,100,125,150,	53	37	10.5	24.5	8.5	Rc1/8	36	83	30	M5 depth 13	81	M6 depth 12
ø25	175,200,250,300,350,400	53.5	37.5	11.5	25	9	Rc1/8	42	93	38	M6 depth 15	91	M6 depth 12

Code / Bore size	K	KA	MM	N	NN	KC	P: 30 or less	P: Over 30 to 100	P: Over 100 to 200	P: Over 200 to 300	P: Over 300
ø20	54	5.2 through	10	18	M5 through	9.5 spot face depth 5.5	24	44	120	200	300
ø25	64	5.2 through	12	26	M6 through	9.5 spot face depth 5.5	24	44	120	200	300

Code / Bore size	PA: 30 or less	PA: Over 30 to 100	PA: Over 100 to 200	PA: Over 200 to 300	PA: Over 300	PP	R	S	U	V	W	WW	X	Y	XA	XB
ø20	29	39	77	117	167	17	11	25	70	24	28	72	16	9.5	3	3.5
ø25	29	39	77	117	167	17	14	29	78	30	34	82	16	9.5	4	4.5

Code / Bore size	AA: 50 or less	AA: Over 50 to 200	AA: Over 200	Q	O: 50 or less	O: Over 50 to 200	O: Over 200
ø20	53	78	122	12	0	25	69
ø25	53.5	84	122	16	0	30.5	68.5

Switch dimensions / Bore size	T0/T5/T2/T3 RD	T0/T5/T2/T3 HD	T2W/T3W RD	T2W/T3W HD	T*Y RD	T*Y HD	T8 RD	T8 HD
ø20	9.5	8.5	11.5	10.5	8.5	7.5	3.5	2.5
ø25	10	8.5	12	10.5	9	7.5	4	2.5

Dimensions (ø32, ø40, ø50, ø63)

● STG-MG5-32, 40, 50, 63

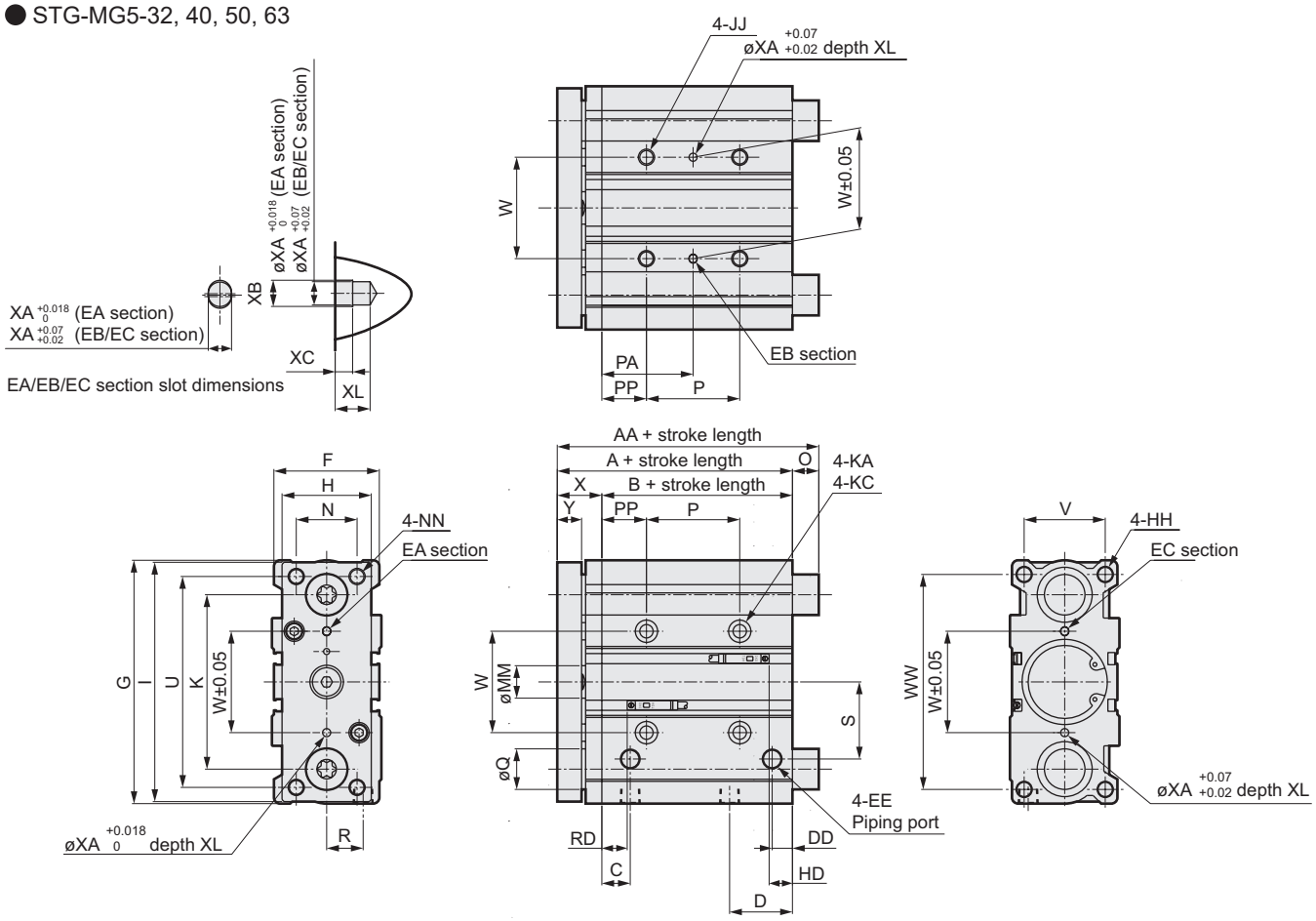

*1: When using a custom stroke, the total dimensions are the same as the longer standard stroke.

Code / Bore size	Standard stroke (mm)	A	B	C	D	DD	EE	F	G	H	HH	I	JJ	K	KA
ø32	25,50,75,100,125, 150,175,200,250, 300,350,400	59.5	37.5	12.5	30.5	9	Rc1/8	48	112	44	M8 depth 20	110	M8 depth 16	78	6.3 through
ø40		66	44	14	31	10	Rc1/8	54	120	44	M8 depth 20	118	M8 depth 16	86	6.3 through
ø50		72	44	14	35	11	Rc1/4	64	148	60	M10 depth 22	146	M10 depth 20	110	8.6 through
ø63		77	49	16.5	35	15	Rc1/4	78	162	70	M10 depth 22	158	M10 depth 20	124	8.6 through

Code / Bore size	KC	MM	N	NN	P					PA	
					25 or less	Over 25 to 100	Over 100 to 200	Over 200 to 300	Over 300	25 or less	Over 25 to 100
ø32	11 spot face depth 7.5	16	30	M8 through	24	48	124	200	300	33	45
ø40	11 spot face depth 7.5	16	30	M8 through	24	48	124	200	300	34	46
ø50	14 spot face depth 9	20	40	M10 through	24	48	124	200	300	36	48
ø63	14 spot face depth 9	20	50	M10 through	28	52	128	200	300	38	50

Code / Bore size	PA			PP	R	S	U	V	W	WW	X	Y	XA	XB	XC	XL
	Over 100 to 200	Over 200 to 300	Over 300													
ø32	83	121	171	21	15	34	96	34	42	98	22	11.5	4	4.5	3	6
ø40	84	122	172	22	18	38	104	40	50	106	22	11.5	4	4.5	3	6
ø50	86	124	174	24	21.5	47	130	46	66	130	28	15.5	5	6	4	8
ø63	88	124	174	24	28	55	130	58	80	142	28	15.5	5	6	4	8

Code / Bore size	AA			Q	O		
	50 or less	Over 50 to 200	Over 200		50 or less	Over 50 to 200	Over 200
ø32	79	100	140	20	19.5	40.5	80.5
ø40	79	100	140	20	13	34	74
ø50	91	116	161	25	19	44	89
ø63	91	116	161	25	14	39	84

Switch dimensions	T0/T5/T2/T3		T2W/T3W		T*Y		T8	
Bore size	RD	HD	RD	HD	RD	HD	RD	HD
ø32	10	8.5	12	10.5	9	7.5	4	2.5
ø40	13	12	15	14	12	11	7	6
ø50	13.5	11.5	15.5	13.5	12.5	10.5	7.5	5.5
ø63	14	16	16	18	13	15	8	10

LCM
LCR
LCG
LCW
LCX
STM
STG
STS/STL
STR2
UCA2
ULK*
JSK/M2
JSG
JSC3/JSC4
USSD
UFCD
USC
UB
JSB3
LMB
LML
HCM
HCA
LBC
CAC4
UCAC2
CAC-N
UCAC-N
RCS2
RCC2
PCC
SHC
MCP
GLC
MFC
BBS
RRC
GRC
RV3*
NHS
HRL
LN
Hand
Chuk
MecHnd/Chuk
ShkAbs
FJ
FK
SpdContr
Ending

Dimensions (ø80)

● STG-MG5-80

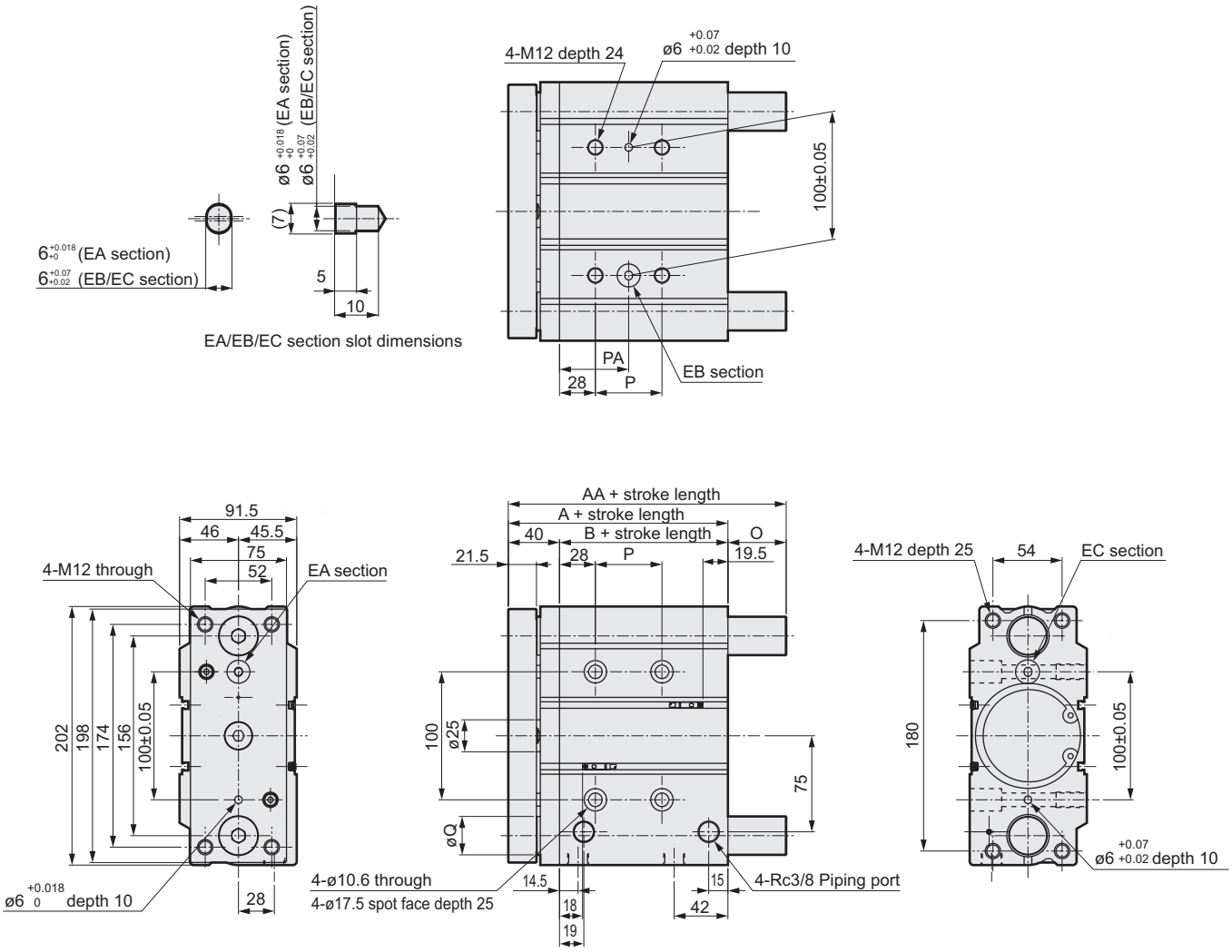

Standard stroke (mm)	A	B	P					PA				
			25 st or less	Over 25 st to 100 st	Over 100 st to 200 st	Over 200 st to 300 st	Over 300 st	25 st or less	Over 25 st to 100 st	Over 100 st to 200 st	Over 200 st to 300 st	Over 300 st
25,50,75,100,125,150,175,200,250,300,350,400	96.5	56.5	28	52	128	200	300	42	54	92	128	178

AA			Q	O		
50 st or less	Over 50 st to 200 st	Over 200 st		50 st or less	Over 50 st to 200 st	Over 200 st
115	142	193	30	18.5	45.5	96.5

● Switch dimensions

T0/T5/T2/T3		T2W/T3W		T*Y		T8	
RD	HD	RD	HD	RD	HD	RD	HD
18	19.5	20	21.5	17	18.5	12	13.5

Dimensions (ø100)

● STG-MG5-100

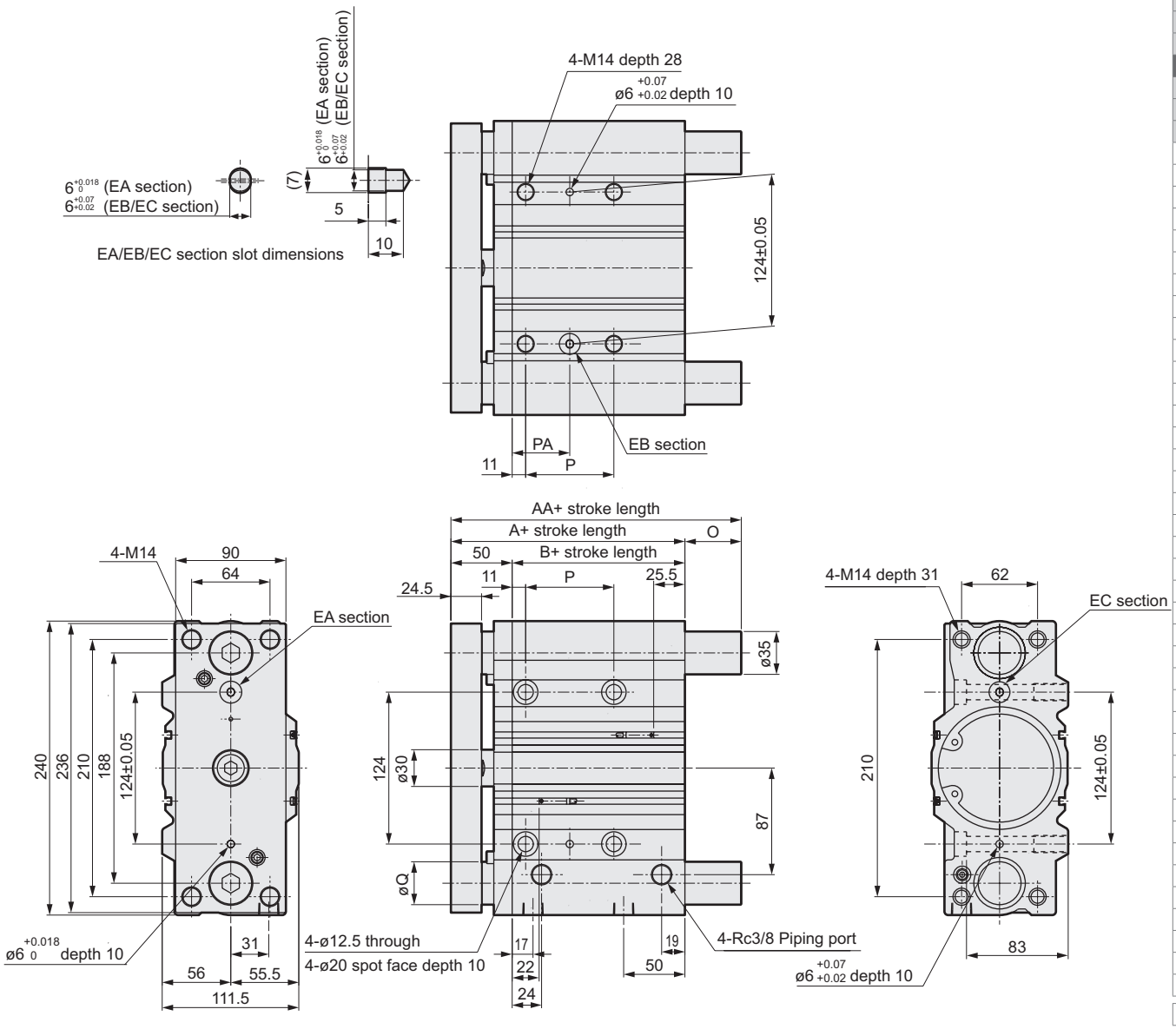

Standard stroke (mm)	A	B	P					PA				
			25 st or less	Over 25 st to 100 st	Over 100 st to 200 st	Over 200 st to 300 st	Over 300 st	25 st or less	Over 25 st to 100 st	Over 100 st to 200 st	Over 200 st to 300 st	Over 300 st
25,50,75,100,125,150,175,200,250,300,350,400	116	66	48	72	148	220	320	35	47	85	121	171

AA			Q	O		
50 st or less	Over 50 st to 200 st	Over 200 st		50 st or less	Over 50 st to 200 st	Over 200 st
137	162	203	35	21	46	87

● Switch dimensions

T0/T5/T2/T3		T2W/T3W		T*Y		T8	
RD	HD	RD	HD	RD	HD	RD	HD
22	25.5	24	27.5	21	24.5	16	19.5

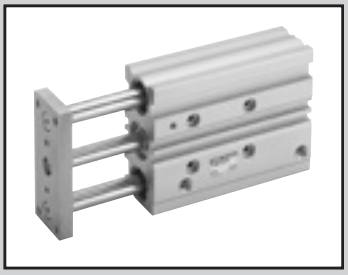

Guided cylinder, double acting/single rod/clean-room specifications

STG-B -P7* Series

● Bore size: ø12/ø16/ø20/ø25/ø32/ø40/ø50/ø63

JIS symbol

RoHS CAD

Specifications

Item	STG-B							
Bore size mm	ø12	ø16	ø20	ø25	ø32	ø40	ø50	ø63
Actuation	Double acting							
Working fluid	Compressed air							
Max. working pressure MPa	1.0 (≈150 psi, 10 bar)							
Min. working pressure MPa	0.2 (≈29 psi, 2 bar)		0.15 (≈22 psi, 1.5 bar)		0.1 (≈15 psi, 1 bar)			
Proof pressure MPa	1.6 (≈230 psi, 16 bar)							
Ambient temperature °C	-10 (14°F) to 60 (140°F) (no freezing)							
Port size	M5		Rc1/8				Rc1/4	
Port size (pressure relief port)	M5							
Stroke tolerance mm	+2.0 0							
Working piston speed mm/s	50 to 500							50 to 300
Cushion	With rubber cushion							
Lubrication	Not available							
Allowable absorbed energy J	0.056	0.088	0.157	0.157	0.401	0.627	0.980	1.560

Stroke

Bore size	Standard stroke (mm)	Max. stroke (mm)	Min. stroke (mm)	Min. stroke (mm)(switch)
ø12	10/20/30/40/50/75/100 125/150/175/200/250	250	5	5(10) *2
ø16				
ø20	20/30/40/50/75/100/125 150/175/200/250/300/350/400	400		
ø25				
ø32	25/50/75/100 125/150/175 200/250/300 350/400			
ø40				
ø50				
ø63				

*1: The custom stroke is available in 5 mm increments. However, the total dimensions are the same as the longer standard stroke.
*2: For types with one or two switches. The value in ( ) is the min. stroke for switches of the 2-color LED and AC magnetic field proof.

Theoretical thrust table

(Unit: N)

Bore size (mm)	Operating direction	Working pressure MPa										
		0.1	0.15	0.2	0.3	0.4	0.5	0.6	0.7	0.8	0.9	1.0
ø12	Push	-	-	22.6	33.9	45.2	56.5	67.9	79.2	90.5	1.02×10^2	1.13×10^2
	Pull	-	-	17.0	25.4	33.9	42.4	50.9	59.4	67.9	76.3	84.8
ø16	Push	-	-	40.2	60.3	80.4	1.01×10^2	1.21×10^2	1.41×10^2	1.61×10^2	1.81×10^2	2.01×10^2
	Pull	-	-	30.2	45.2	60.3	75.4	90.5	1.06×10^2	1.21×10^2	1.36×10^2	1.51×10^2
ø20	Push	-	47.1	62.8	94.2	1.26×10^2	1.57×10^2	1.88×10^2	2.20×10^2	2.51×10^2	2.83×10^2	3.14×10^2
	Pull	-	35.3	47.1	70.7	94.2	1.18×10^2	1.41×10^2	1.65×10^2	1.88×10^2	2.12×10^2	2.36×10^2
ø25	Push	-	73.6	98.2	1.47×10^2	1.96×10^2	2.45×10^2	2.95×10^2	3.44×10^2	3.93×10^2	4.42×10^2	4.91×10^2
	Pull	-	56.7	75.6	1.13×10^2	1.51×10^2	1.89×10^2	2.27×10^2	2.64×10^2	3.02×10^2	3.40×10^2	3.78×10^2
ø32	Push	80.4	1.21×10^2	1.61×10^2	2.41×10^2	3.22×10^2	4.02×10^2	4.83×10^2	5.63×10^2	6.43×10^2	7.24×10^2	8.04×10^2
	Pull	60.3	90.5	1.21×10^2	1.81×10^2	2.41×10^2	3.02×10^2	3.62×10^2	4.22×10^2	4.83×10^2	5.43×10^2	6.03×10^2
ø40	Push	1.26×10^2	1.88×10^2	2.51×10^2	3.77×10^2	5.03×10^2	6.28×10^2	7.54×10^2	8.80×10^2	1.01×10^3	1.13×10^3	1.26×10^3
	Pull	1.06×10^2	1.58×10^2	2.11×10^2	3.17×10^2	4.22×10^2	5.28×10^2	6.33×10^2	7.39×10^2	8.44×10^2	9.50×10^2	1.06×10^3
ø50	Push	1.96×10^2	2.95×10^2	3.93×10^2	5.89×10^2	7.85×10^2	9.82×10^2	1.18×10^3	1.37×10^3	1.57×10^3	1.77×10^3	1.96×10^3
	Pull	1.65×10^2	2.47×10^2	3.30×10^2	4.95×10^2	6.60×10^2	8.25×10^2	9.90×10^2	1.15×10^3	1.32×10^3	1.48×10^3	1.65×10^3
ø63	Push	3.12×10^2	4.68×10^2	6.23×10^2	9.35×10^2	1.25×10^3	1.56×10^3	1.87×10^3	2.18×10^3	2.49×10^3	2.81×10^3	3.12×10^3
	Pull	2.80×10^2	4.20×10^2	5.61×10^2	8.41×10^2	1.12×10^3	1.40×10^3	1.68×10^3	1.96×10^3	2.24×10^3	2.52×10^3	2.80×10^3

Switch specifications

● 1-color/2-color LED/for AC magnetic field proof

Item	Proximity 2-wire	Proximity 2-wire			Proximity 3-wire				Reed 2-wire							Proximity 2-wire
	T1H/T1V	T2H/T2V/ T2JH/T2JV	T2YH/ T2YV	T2WH/ T2WV	T3H/T3V	T3PH/ T3PV	T3YH/ T3YV	T3WH/ T3WV	T0H/T0V		T5H/T5V		T8H/T8V			T2YD(*4) T2YDT
Applications	For programmable controller, relay, compact solenoid valve	Dedicated for programmable controller			For programmable controller, relay				For programmable controller, relay		For programmable controller, relay, IC circuit (no indicator lamp), serial connection		For programmable controller, relay			For programmable controller
Output method	-				NPN output	PNP output	NPN output	NPN output	-							
Pwr. supp. V.	-				10 to 28 VDC				-							
Load voltage	85 to 265 VAC	10 to 30 VDC		24 VDC ±10%	30 VDC or less				12/24 VDC	100/110 VAC	5/12/24 VDC	100/110 VAC	12/24 VDC	110 VAC	220 VAC	24 VDC ±10%
Load current	5 to 100 mA	5 to 20 mA (*3)			100 mA or less		50 mA or less		5 to 50 mA	7 to 20 mA	≤50 mA	≤20 mA	5 to 50 mA	7 to 20 mA	7 to 10 mA	5 to 20 mA
Indicator	LED (Lit when ON)	LED (Lit when ON)	Red/green LED (Lit when ON)	Red/green LED (Lit when ON)	LED (Lit when ON)	Yellow LED (Lit when ON)	Red/green LED (Lit when ON)	Red/green LED (Lit when ON)	LED (Lit when ON)		No indicator lamp		LED (Lit when ON)			Red/green LED (Lit when ON)
Leakage current	≤ 1 mA at 100 VAC, ≤ 2 mA at 200 VAC	1 mA or less			10 μA or less				0 mA							1 mA or less
Weight g	1 m:33 3 m:87 5 m:142	1 m:18 3 m:49 5 m:80	1 m:33 3 m:87 5 m:142	1 m:18 3 m:49 5 m:80	1 m:18 3 m:49 5 m:80		1 m:33 3 m:87 5 m:142	1 m:18 3 m:49 5 m:80	1 m:18 3 m:49 5 m:80				1 m:33 3 m:87 5 m:142			1 m:61 3 m:166 5 m:272

*1 : Refer to Ending Page 1 for detailed switch specifications and dimensions.
*2 : Switches other than the above models, such as switches with connectors, are also available. Refer to Ending Page 1.
*3 : The max. load current is 20 mA at 25°C. The current is lower than 20 mA if the operating ambient temperature around the switch is higher than 25˚C. (5 to 10 mA at 60°C)
*4 : AC magnetic field proof switch (T2YD/T2YDT) cannot be used in DC magnetic fields.

Cylinder weight

● STG-B-P7

Unit: kg

Item	Stroke																Switch weight
Bore size (mm)	10	20	25	30	40	50	75	100	125	150	175	200	250	300	350	400	
ø12	0.27	0.30		0.33	0.38	0.42	0.50	0.58	0.68	0.76	0.84	0.92	1.09				Refer to the weight in the switch specifications.
ø16	0.38	0.43		0.47	0.54	0.59	0.70	0.82	0.95	1.06	1.17	1.29	1.50				
ø20		0.76		0.83	0.94	1.02	1.18	1.35	1.55	1.72	1.89	2.06	2.43	2.77	3.10	3.44	
ø25		1.06		1.14	1.32	1.41	1.63	1.86	2.12	2.35	2.57	2.79	3.28	3.73	4.18	4.63	
ø32			1.62			1.92	2.36	2.67	3.03	3.34	3.64	3.95	4.62	5.23	5.84	6.45	
ø40			1.90			2.25	2.72	3.07	3.48	3.83	4.18	4.53	5.28	5.98	6.68	7.38	
ø50			3.24			3.78	4.50	5.04	5.66	6.19	6.73	7.26	8.45	9.51	10.61	11.67	
ø63			4.12			4.76	5.61	6.25	6.98	7.62	8.27	8.91	10.30	11.66	12.92	14.18	

LCM
LCR
LCG
LCW
LCX
STM
STG
STS/STL
STR2
UCA2
ULK*
JSK/M2
JSG
JSC3/JSC4
USSD
UFCD
USC
UB
JSB3
LMB
LML
HCM
HCA
LBC
CAC4
UCAC2
CAC-N
UCAC-N
RCS2
RCC2
PCC
SHC
MCP
GLC
MFC
BBS
RRC
GRC
RV3*
NHS
HRL
LN
Hand
Chuk
MecHnd/Chuk
ShkAbs
FJ
FK
SpdContr
Ending

How to order

Without switch (built-in magnet for switch)

STG - B - 32 - 25 ——— P72

With switch (built-in magnet for switch)

STG - B - 32 - 25 - T2H - R - P72

Model No.

Ⓐ Bearing

Ⓑ Bore size

Ⓒ Stroke

Ⓓ Switch model No.
*1 *2 *3

Ⓔ Switch quantity

Ⓕ Clean-room specifications

Code	Description
Ⓐ Bearing	
B	Ball bearing
Ⓑ Bore size (mm)	
12	ø12
16	ø16
20	ø20
25	ø25
32	ø32
40	ø40
50	ø50
63	ø63
Ⓒ Stroke (mm)	
Refer to the stroke table on the following page	

Ⓓ Switch model No.

Straight lead wire	L-shaped lead wire	Contact	Voltage AC	Voltage DC	Indicator	Lead wire
T0H*	**T0V***	Reed	●	●	1-color LED	2-wire
T5H*	**T5V***		●	●	No indicator lamp	
T8H*	**T8V***		●	●	1-color LED	
T1H*	**T1V***	Proximity	●		1-color LED	2-wire
T2H*	**T2V***			●		
T3H*	**T3V***			●		3-wire
T3PH*	**T3PV***			●	1-color LED	3-wire
T2WH*	**T2WV***			●	2-color LED	2-wire
T2YH*	**T2YV***			●		
T3WH*	**T3WV***			●		3-wire
T3YH*	**T3YV***			●		
T2JH*	**T2JV***			●	1-color LED off-delay	2-wire
T2YD*	**-**			●	2-color LED AC magnetic field	2-wire
T2YDT*	**-**			●		

* Lead wire length	
Blank	1 m (standard)
3	3 m (option)
5	5 m (option)

Ⓔ Switch quantity	
R	1 on rod side
H	1 on head side
D	2
T	3

Ⓕ Clean-room specifications	
P72	Exhaust port
P73	Vacuum treatment

⚠ Precautions for model No. selection

*1 : Switches other than Ⓓ Switch model No. are also available. (Made-to-order product) Refer to Ending Page 1 for details.
*2 : T8H/V cannot be installed on ø12 and ø16.
*3 : Switches are shipped with the product. Contact CKD if assembling before shipment is necessary.

[Example of model No.]

STG-B-40-75-T0H-D-P72

Model: Guided cylinder, double acting/single rod

Ⓐ Bearing : Ball bearing
Ⓑ Bore size : ø40 mm
Ⓒ Stroke : 75 mm
Ⓓ Switch model No. : Reed T0H switch, lead wire length 1 m
Ⓔ Switch quantity : 2
Ⓕ Clean-room specifications : Exhaust port

Ⓒ Stroke

Stroke (mm)		Applicable bore size							
		ø12	ø16	ø20	ø25	ø32	ø40	ø50	ø63
Standard stroke	10	●	●						
	20	●	●	●	●				
	25					●	●	●	●
	30	●	●	●	●				
	40	●	●	●	●				
	50	●	●	●	●	●	●	●	●
	75	●	●	●	●	●	●	●	●
	100	●	●	●	●	●	●	●	●
	125	●	●	●	●	●	●	●	●
	150	●	●	●	●	●	●	●	●
	175	●	●	●	●	●	●	●	●
	200	●	●	●	●	●	●	●	●
	250	●	●	●	●	●	●	●	●
	300			●	●	●	●	●	●
	350			●	●	●	●	●	●
	400			●	●	●	●	●	●
Min. stroke	*2	5(10)							
Custom stroke	*1	In 5 mm increments							

*1: The total dimensions are the same as the longer standard stroke.
*2: The value in ( ) is the min. stroke for switches of the 2-color LED and AC magnetic field proof.

How to order switch

SW - T0V

Switch model No.
(Item Ⓓ on page 406)

Note: Contact CKD when using an environment-friendly T-switch.

LCM
LCR
LCG
LCW
LCX
STM
STG
STS/STL
STR2
UCA2
ULK*
JSK/M2
JSG
JSC3/JSC4
USSD
UFCD
USC
UB
JSB3
LMB
LML
HCM
HCA
LBC
CAC4
UCAC2
CAC-N
UCAC-N
RCS2
RCC2
PCC
SHC
MCP
GLC
MFC
BBS
RRC
GRC
RV3*
NHS
HRL
LN
Hand
Chuk
MecHnd/Chuk
ShkAbs
FJ
FK
SpdContr
Ending

Dimensions (ø12, ø16, ø20, ø25)

CAD

● STG-B-12, 16, 20, 25

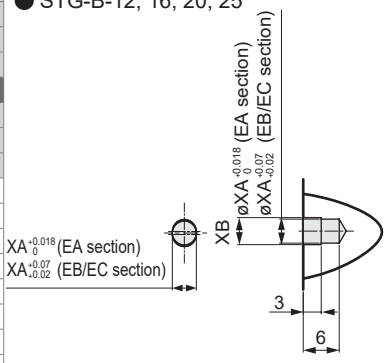

EA/EB/EC section slot dimensions

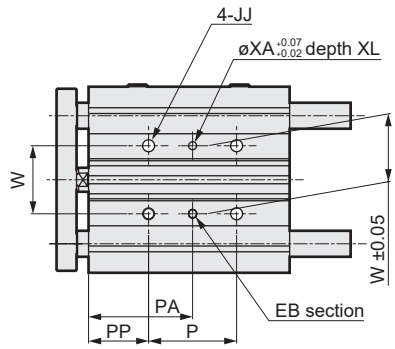

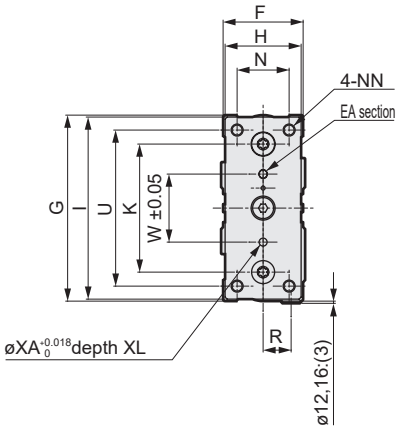

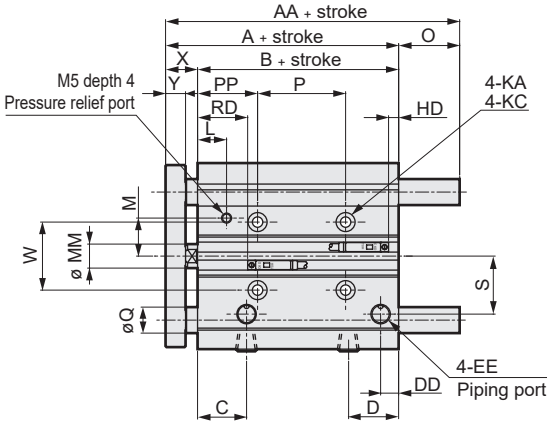

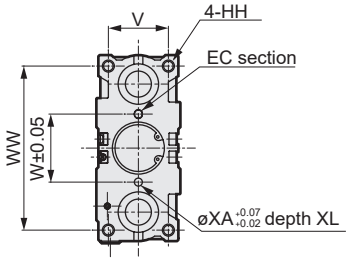

Code / Bore size (mm)	Standard stroke (mm)	A	B	C	D	DD	EE	F	G	H	HH	I	JJ
ø12	10,20,30,40,50,75,100,125	55	42	25	16	7	M5	26	58	22	M4 depth 10	56	M5 depth 10
ø16	150,175,200,250	59	46	25	18	7.5	M5	30	64	25	M5 depth 12	62	M5 depth 10
ø20	20,30,40,50,75,100,125,150	66	50	23.5	24.5	8.5	Rc1/8	36	83	30	M5 depth 13	81	M6 depth 12
ø25	175,200,250,300,350,400	66.5	50.5	24.5	25	9	Rc1/8	42	93	38	M6 depth 15	91	M6 depth 12

Code / Bore size (mm)	K	KA	MM	N	NN	KC	P: 30 or less	P: Over 30 to 100	P: Over 100 to 200	P: Over 200 to 300	P: Over 300	L	M
ø12	41	4.3 through	6	14	M4 through	7.5 spot face depth 4.5	20	40	110	200	—	9	12.5
ø16	46	4.3 through	8	16	M5 through	8 spot face depth 4.5	24	44	110	200	—	8.5	13
ø20	54	5.2 through	10	18	M5 through	9.5 spot face depth 5.5	24	44	120	200	300	13.5	14
ø25	64	5.2 through	12	26	M6 through	9.5 spot face depth 5.5	24	44	120	200	300	14.5	17

Code / Bore size (mm)	PA: 30 or less	PA: Over 30 to 100	PA: Over 100 to 200	PA: Over 200 to 300	PA: 300 Over	PP	R	S	U	V	W	WW	X	Y
ø12	28	38	73	118	—	18	8	17	48	18	23	50	13 0 -1.5	7.5
ø16	30	40	73	118	—	18	10	18	54	22	24	56	13 0 -1.5	7.5
ø20	42	52	90	130	180	30	11	25	70	24	28	72	16 0 -2	9.5
ø25	42	52	90	130	180	30	14	29	78	30	34	82	16 0 -2	9.5

Code / Bore size (mm)	T0/T5/T2/T3 RD	T0/T5/T2/T3 HD	T2W/T3W RD	T2W/T3W HD	XA	XB
ø12	18	5	20	7	3	3.5
ø16	17	10	19	12	3	3.5
ø20	22.5	8.5	24.5	10.5	3	3.5
ø25	23	8.5	25	10.5	4	4.5

*1 : When using a custom stroke, the total dimensions are the same as the longer standard stroke.

*2 : Refer to page 410 for RD, HD and protruding dimensions of the 2-color LED (except for T2WH/V and T3WH/V), off-delay, AC magnetic field proof, T1H/V and T8H/V switches.

Code / Bore size (mm)	AA: 30 or less	AA: Over 30 to 100	AA: Over 100	Q	O: 30 or less	O: Over 30 to 100	O: Over 100
ø12	55	55	85	6	0	0	30
ø16	59	65	95	8	0	6	36

Code / Bore size (mm)	AA: 30 or less	AA: Over 30 to 100	AA: Over 100 to 200	AA: Over 200	Q	O: 30 or less	O: Over 30 to 100	O: Over 100 to 200	O: Over 200
ø20	66	78	100	122	10	0	12	34	56
ø25	66.5	84	103	122	13	0	17.5	36.5	55.5

Dimensions (ø32, ø40, ø50, ø63)

CAD

● STG-B-32, 40, 50, 63

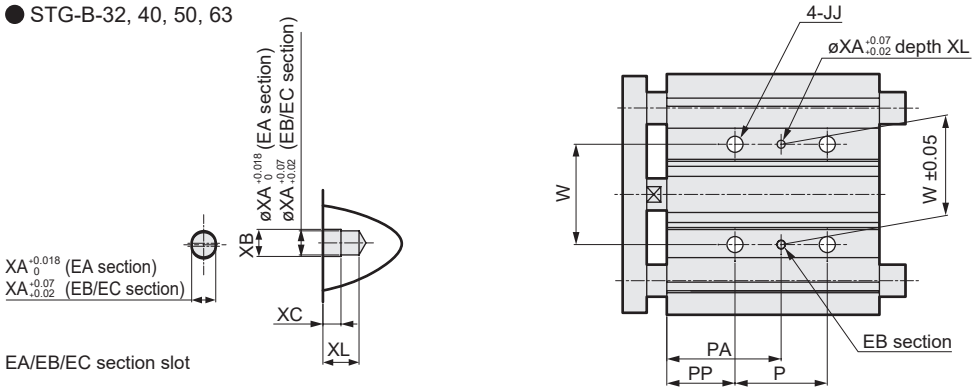

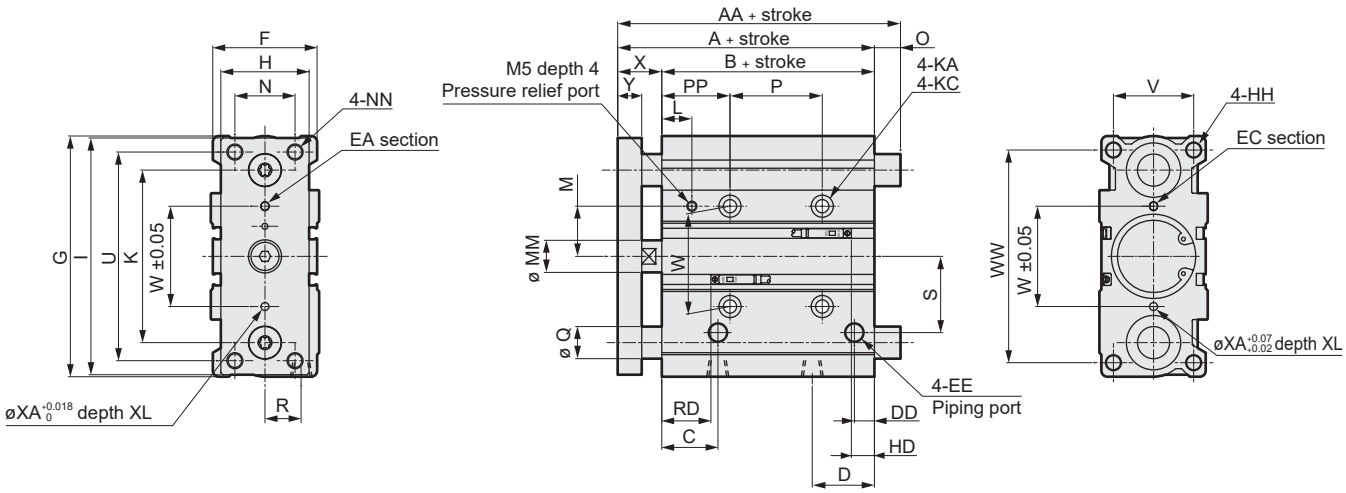

Code / Bore size (mm)	Standard stroke (mm)	A	B	C	D	DD	EE	F	G	H	HH	I	JJ
ø32	25,50,75,100,125, 150,175,200,250, 300,350,400	71.5	49.5	24.5	30.5	9	Rc1/8	48	112	44	M8 depth 20	110	M8 depth 16
ø40		78	56	26	31	10	Rc1/8	54	120	44	M8 depth 20	118	M8 depth 16
ø50		83	55	25	35	11	Rc1/4	64	148	60	M10 depth 22	146	M10 depth 20
ø63		88	60	27.5	35	15	Rc1/4	78	162	70	M10 depth 22	158	M10 depth 20

Code / Bore size (mm)	K	KA	KC	MM	N	NN	P: 25 or less	P: Over 25 to 100	P: Over 100 to 200	P: Over 200 to 300	P: Over 300	L	M
ø32	78	6.3 through	11 spot face depth 7.5	16	30	M8 through	24	48	124	200	300	14.5	21
ø40	86	6.3 through	11 spot face depth 7.5	16	30	M8 through	24	48	124	200	300	15	25
ø50	110	8.6 through	14 spot face depth 9	20	40	M10 through	24	48	124	200	300	14	33
ø63	124	8.6 through	14 spot face depth 9	20	50	M10 through	28	52	128	200	300	14.5	40

Code / Bore size (mm)	PA: 25 or less	PA: Over 25 to 100	PA: Over 100 to 200	PA: Over 200 to 300	PA: Over 300	PP	R	S	U	V	W	WW	X	Y
ø32	45	57	95	133	183	33	15	34	96	34	42	98	22 0 -2	11.5
ø40	46	58	96	134	184	34	18	38	104	40	50	106	22 0 -2	11.5
ø50	47	59	97	135	185	35	21.5	47	130	46	66	130	28 0 -2	15.5
ø63	49	61	99	135	185	35	28	55	130	58	80	142	28 0 -2	15.5

Code / Bore size (mm)	T0/T5/T2/T3 RD	T0/T5/T2/T3 HD	T2W/T3W RD	T2W/T3W HD	XA	XB	XC	XL
ø32	22	8.5	24	10.5	4	4.5	3	6
ø40	25	12	27	14	4	4.5	3	6
ø50	24.5	11.5	26.5	13.5	5	6	4	8
ø63	25	16	27	18	5	6	4	8

*1 : When using a custom stroke, the total dimensions are the same as the longer standard stroke.

*2 : Refer to page 410 for RD, HD and protruding dimensions of the 2-color LED (except for T2WH/V and T3WH/V), off-delay, AC magnetic field proof, T1H/V and T8H/V switches.

Code / Bore size (mm)	AA: 50 or less	AA: Over 50 to 100	AA: Over 100 to 200	AA: Over 200	Q	O: 50 or less	O: Over 50 to 100	O: Over 100 to 200	O: Over 200
ø32	79	98	118	140	16	7.5	26.5	46.5	68.5
ø40	79	98	118	140	16	1	20	40	62
ø50	91	114	134	161	20	8	31	51	78
ø63	91	114	134	161	20	3	26	46	73

LCM
LCR
LCG
LCW
LCX
STM
STG
STS/STL
STR2
UCA2
ULK*
JSK/M2
JSG
JSC3/JSC4
USSD
UFCD
USC
UB
JSB3
LMB
LML
HCM
HCA
LBC
CAC4
UCAC2
CAC-N
UCAC-N
RCS2
RCC2
PCC
SHC
MCP
GLC
MFC
BBS
RRC
GRC
RV3*
NHS
HRL
LN
Hand
Chuk
MecHnd/Chuk
ShkAbs
FJ
FK
SpdContr
Ending

STG Series common dimensions (Switches of the 2-color LED, off-delay, AC magnetic field proof, T8H/V and T1H/V)

● STG-**-**-T$^{2}_{3}$ YH/V, T2JH/V, T8H/V

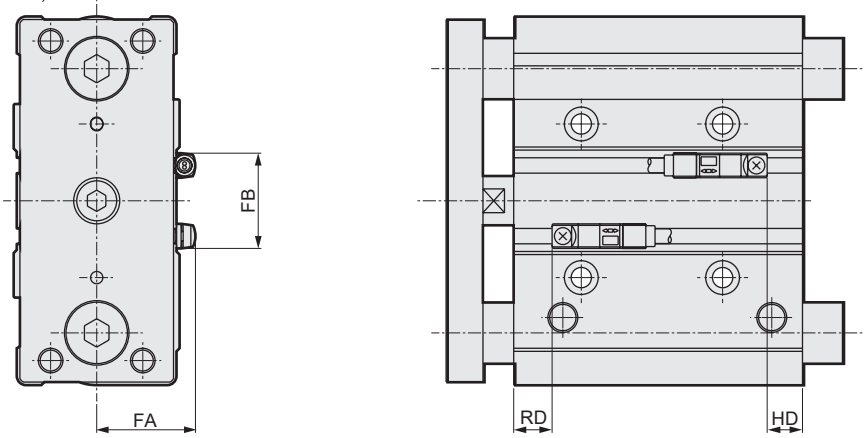

Code / Bore size (mm)	FA	FB	STG				STG-P7				STG-C				STG-Q-R (rod side)		STG-Q-H (head side)	
			T*YH/V T2JH/V		T8H/V		T*YH/V T2JH/V		T8H/V		T*YH/V T2JH/V		T8H/V		T*YH/V T2JH/V		T*YH/V T2JH/V	
			RD	HD	RD	HD	RD	HD	RD	HD	RD	HD	RD	HD	RD	HD	RD	HD
ø12	19	16	4	4	— *1	— *1	17	4	— *1	— *1	—	—	—	—	—	—	—	—
ø16	21	16	3	9	— *1	— *1	16	9	— *1	— *1	19.5	17	— *1	— *1	—	—	—	—
ø20	24	16	8.5	7.5	3.5	2.5	21.5	7.5	16.5	2.5	22.5	18.5	17.5	13.5	34	7.5	5.5	39
ø25	27	17	9	7.5	4	2.5	22	7.5	17	2.5	24.5	16.5	19.5	11.5	34.5	7.5	9	34
ø32	30	24	9	7.5	4	2.5	21	7.5	16	2.5	22.5	19	17.5	14	34.5	8	9	34.5
ø40	33	31	12	11	7	6	24	11	19	6	26.5	21.5	21.5	16.5	39.5	11	12	36.5
ø50	38	32	12.5	10.5	7.5	5.5	23.5	10.5	18.5	5.5	29	19.5	24	14.5	39	10.5	12.5	37
ø63	45	32	13	15	8	10	24	15	19	10	30	23	25	18	39	15	13	39
ø80	51	56	17	18.5	12	13.5	—	—	—	—	—	—	—	—	—	—	—	—
ø100	60	62	21	24.5	16	19.5	—	—	—	—	—	—	—	—	—	—	—	—

*1: T8H/V switch cannot be installed on STG-12, 16, STG-12, 16-P7, or STG-Q-20 to 63-(R/H).

● STG-**-**-T2YD*, T1H/V

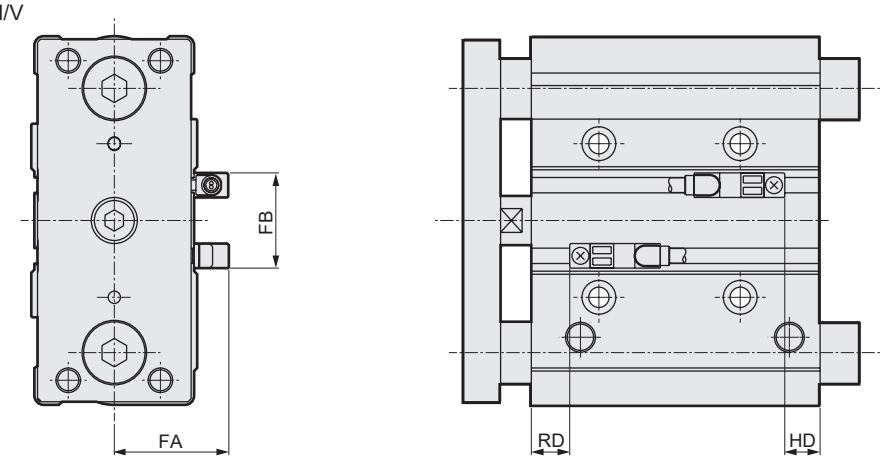

Code / Bore size (mm)	FA	FB	STG		STG-P7		STG-C		STG-Q-R (rod side)		STG-Q-H (head side)	
			RD	HD	RD	HD	RD	HD	RD	HD	RD	HD
ø12	24	16	4	4	17	4	—	—	—	—	—	—
ø16	26	16	3	9	16	9	19.5	17	—	—	—	—
ø20	29	16	8.5	7.5	21.5	7.5	22.5	18.5	34	7.5	5.5	39
ø25	32	17	9	7.5	22	7.5	24.5	16.5	34.5	7.5	9	34
ø32	35	24	9	7.5	21	7.5	22.5	19	34.5	8	9	34.5
ø40	38	31	12	11	24	11	26.5	21.5	39.5	11	12	36.5
ø50	43	32	12.5	10.5	23.5	10.5	29	19.5	39	10.5	12.5	37
ø63	50	32	13	15	24	15	30	23	39	15	13	39
ø80	56	56	17	18.5	—	—	—	—	—	—	—	—
ø100	65	62	21	24.5	—	—	—	—	—	—	—	—

MEMO

LCM
LCR
LCG
LCW
LCX
STM
STG
STS/STL
STR2
UCA2
ULK*
JSK/M2
JSG
JSC3/JSC4
USSD
UFCD
USC
UB
JSB3
LMB
LML
HCM
HCA
LBC
CAC4
UCAC2
CAC-N
UCAC-N
RCS2
RCC2
PCC
SHC
MCP
GLC
MFC
BBS
RRC
GRC
RV3*
NHS
HRL
LN
Hand
Chuk
MecHnd/Chuk
ShkAbs
FJ
FK
SpdContr
Ending

As the selection conditions are different from those of general air cylinders, confirm whether the model is adequate or not according to the selection guide.

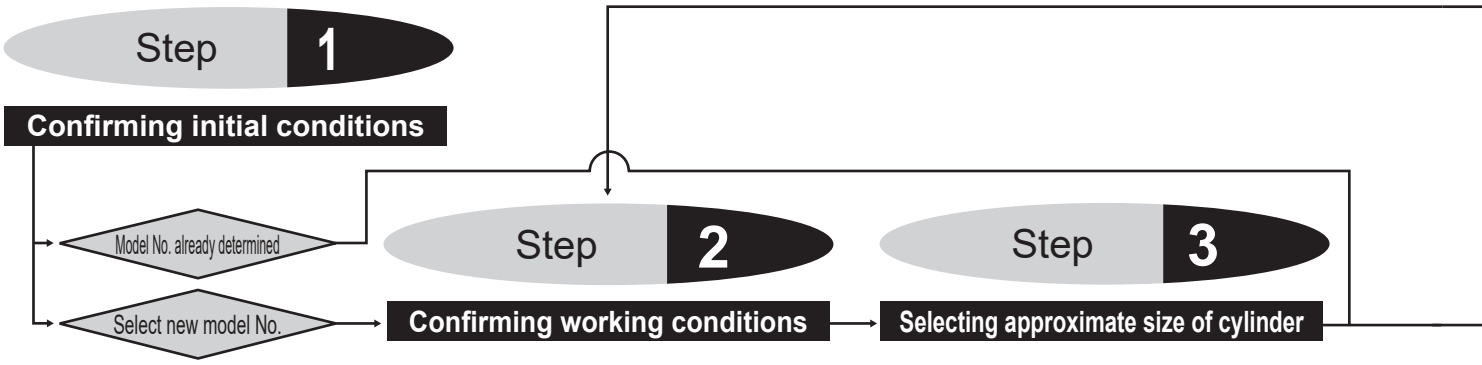

Step 2 Confirming working conditions

1. Working pressure P (MPa)
2. Total applied load W (N)

[Total applied load]

When determining the total applied load, take into account the weight of the movable part weight of the cylinder body.

W = (Applied load) + (Jig load) + (Self weight of movable part: Fa).

Calculate the self-weight of movable parts by using the value in movable part weight table on page 425.

Fa=Max10

Ma : Movable part weight (kg)

Fa : Self-weight of movable part (N)

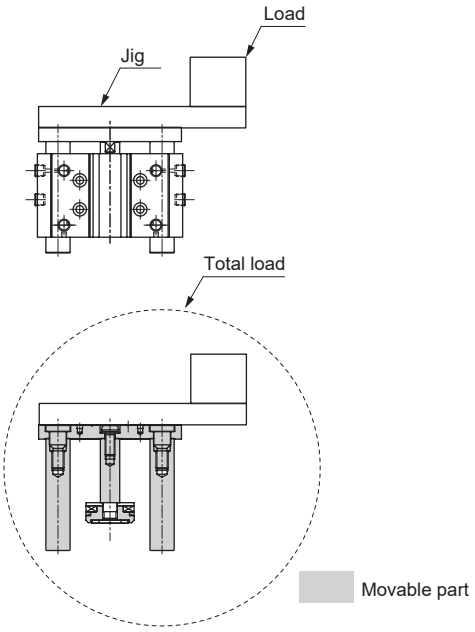

3. Mounting orientation

[Actuation]

Horizontal, vertical-rise, vertical-decline

4. Stroke ST (mm)
5. Operation time t(s)
6. Stroke end speed V (m/s)

V = ST/t x (1 + 1.5 x α/100)

(Note) Load factor α will be calculated in 5-1 ②

Step 3 Selecting approximate size of cylinder

● Formula for calculating cylinder size (bore size)

$F = \pi/4 \times D^2 \times P$

$\therefore D = \sqrt{4F/\pi P}$

D: Cylinder bore size (mm)

P: Working pressure (MPa)

F: Cylinder theoretical thrust (N)

● When calculating from the theoretical thrust value in Table 1

Approximate required thrust ≥ Applied load x 2

("x 2" in "Applied load x 2" is for when the load factor is approx. 50% as a safety coefficient)

[Example] Working pressure 0.5(MPa)

Applied load 25(N)

Required thrust: 25(N)x2=50(N)

The bore size selected from Table 1 with theoretical thrust of 50 N and over at working pressure of 0.5 MPa will be ø12 or more.

D=ø12

[Cylinder theoretical thrust]

Table 1 Cylinder theoretical thrust table

Theoretical thrust table ø12, ø16 Unit: N

Actuation direction	Pressure MPa	Bore size mm	
		ø12	ø16
Push	0.15	17	22.6
	0.2	22.6	30.2
	0.3	33.9	45.2
	0.4	45.2	60.3
	0.5	56.6	75.4
	0.6	67.8	90.5
	0.7	79.1	106
	0.8	90.4	121
	0.9	101.8	136

* Refer to page 336 for theoretical thrust table.

Step 4

Calculating total applied load (W) and each moment

To the next page

Step 4 Calculating total applied load (W) and each moment

● Calculate the static load (W_0) and the moment (M) based on the load cylinder mounting status.

W_0 = (Applied load) + (Jig load) (N)

$M_1 = F_1 \times \ell_1$ (N·m)

$M_2 = F_2 \times \ell_2$ (N·m)

$M_3 = F_3 \times \ell_3$ (N·m)

For values of F_1, F_2 and F_3, use those shown in Fig. 2.

Fig. 2 Formula for calculating each moment
Calculate each moment from total applied load, inertia force coefficient and eccentric distance.

[Bending moment]

$$M_1 = F_1 \times \ell_1 = 10 \times m_1 \times G \times \ell_1$$

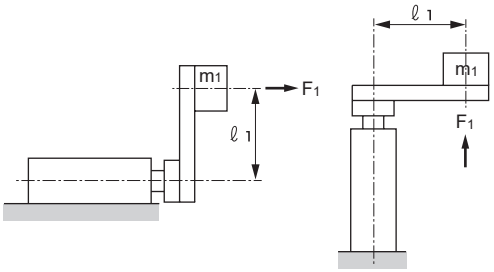

[Radial moment]

$$M_2 = F_2 \times \ell_2 = 10 \times m_2 \times G \times \ell_2$$

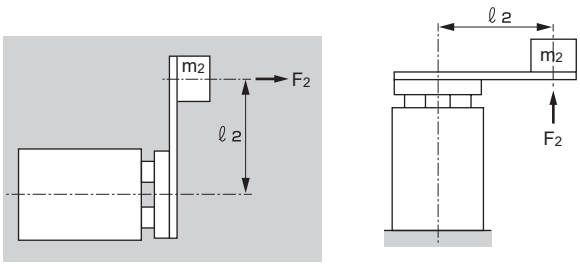

[Torsion moment]

$$M_3 = F_3 \times \ell_3 = 10 \times m_3 \times {}_3\ell$$

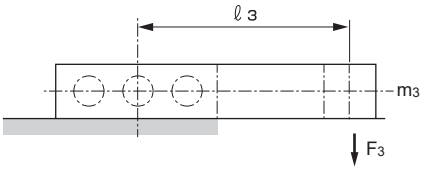

m_1: m_2: m_3: Load weight (kg)

ℓ_1: ℓ_2: ℓ_3: Eccentric distance (m)

G: Inertia force coefficient

Fig. 3 Trend of inertia force coefficient for guided cylinder

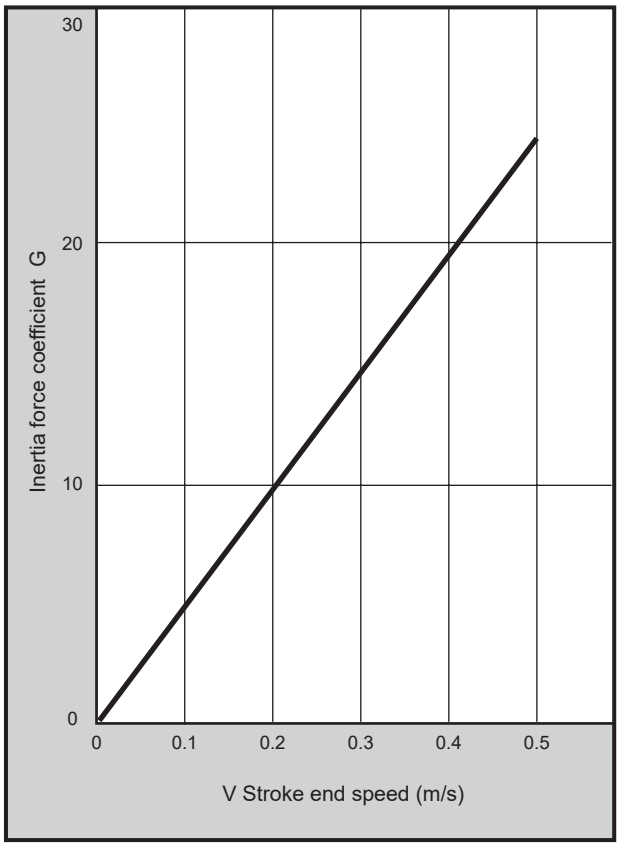

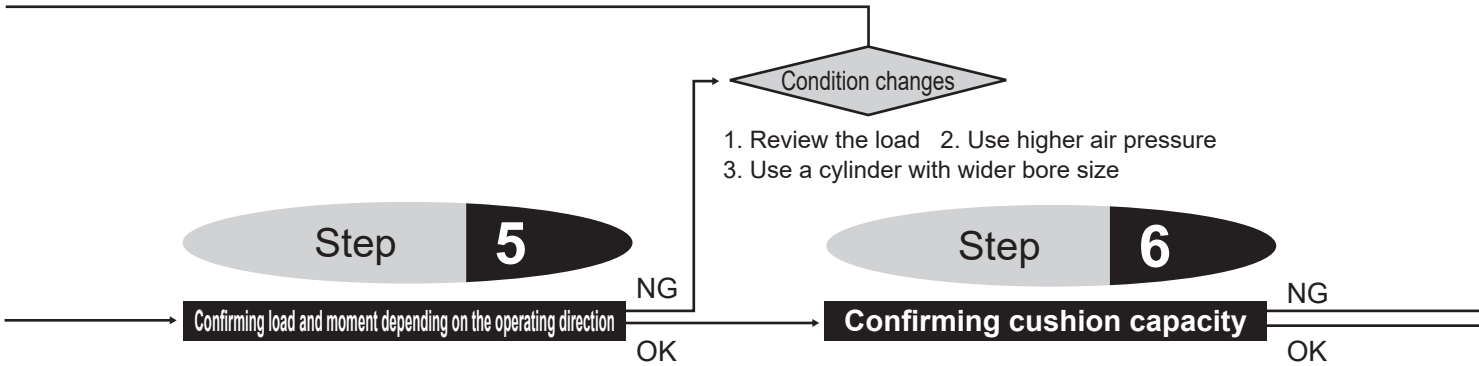

Step 5 Confirming load and moment depending on the operating direction

5-1 Confirming applied load

1 For horizontal operation

The value of static applied load must be the allowable load value or less.

Static applied load Wo Value obtained in Step 4
Allowable lateral load Wmax Select from Table 2 or the graph depending on stroke
(When using a custom stroke, select the longer standard stroke)
Wo ≤ Wmax

Table 2 Allowable lateral load

Unit: N

Bore size (mm)	Model No.	Bearing	Stroke (mm)			
			10	20	25	30
ø12	STG-M	Metal bush bearing	29	24		20
	STG-B	Ball bearing	38	27		22
ø16	STG-M	Metal bush bearing	51	42		36
	STG-B	Ball bearing	49	35		29
ø20	STG-M	Metal bush bearing		67		58
	STG-B	Ball bearing		52		42
ø25	STG-M	Metal bush bearing		125		110
	STG-B	Ball bearing		81		66
ø32	STG-M	Metal bush bearing			223	
	STG-B	Ball bearing			171	

* Refer to page 420 for allowable lateral load.
Also refer to the graphs on pages 422 to 424 for eccentric load.

2 For vertical operation

The total applied load value must be the value obtained by applying the load factor to the theoretical thrust

● Calculation of load factor

Total applied load W Value obtained in Step 2
Theoretical thrust of cylinder F Refer to the theoretical thrust table on page 336 according to the pressure

$\alpha = W/F \times 100$ (%)

● Determine the load factor by taking into account the status of utilization such as stability margin and service life of the cylinder. For general use, the value within the range in Table 3 is desirable.

Table 3 Appropriate range of load factor (reference value)

Working pressure (MPa)	Load factor (%)
0.1 to 0.3	α ≤ 40
0.3 to 0.6	α ≤ 50
0.6 to 1.0	α ≤ 60

● Confirm the following when eccentric load is applied

The value must be the allowable load value or less from the graph of eccentric distance and load weight on pages 416 and 417

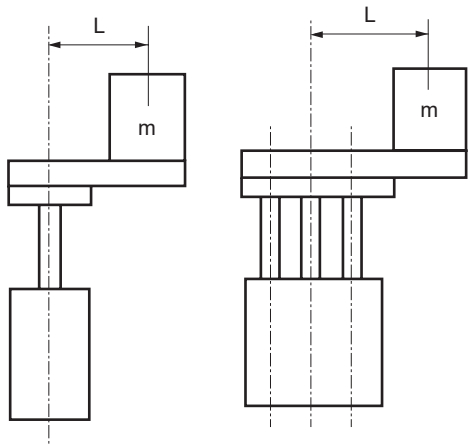

5-2 Confirming static moment

1 Divide the value of bending moment and radial moment by the value in Table 4 to obtain the moment ratio and check that the total value of the moment ratio is 1.0 or less.

● Calculation of moment ratio

Bending moment M_1 } Calculated value
Radial moment M_2 } in Step 4

$M_1/M_{1max} + M_2/M_{2max} \leq 1.0$

LCM
LCR
LCG
LCW
LCX
STM
STG
STS/STL
STR2
UCA2
ULK*
JSK/M2
JSG
JSC3/JSC4
USSD
UFCD
USC
UB
JSB3
LMB
LML
HCM
HCA
LBC
CAC4
UCAC2
CAC-N
UCAC-N
RCS2
RCC2
PCC
SHC
MCP
GLC
MFC
BBS
RRC
GRC
RV3*
NHS
HRL
LN
Hand
Chuk
MecHnd/Chuk
ShkAbs
FJ
FK
SpdContr
Ending

Condition changes

1. Install an external shock absorber
2. Decrease the operation speed
3. Use a cylinder with larger bore size

Selection complete

Table 4 Allowable value of moment (N·m)

Bore size (mm)	Allowable bending moment $M_{1\,max}$, $M_{2\,max}$ (N·m)	
	Bearing	
	STG-M Metal bush bearing	STG-B Ball bearing
ø12	11.2	7.0
ø16	19.2	11.2
ø20	35.3	19.2
ø25	51.9	35.3
ø32	171.5	51.9
ø40	171.5	51.9
ø50	294.0	171.5
ø63	294.0	171.5
ø80	509.6	294.0
ø100	793.8	509.6

❷ The torsion moment must be the allowable torque value or less.

Torsion moment M3 Value obtained in Step 4

Allowable torque

M3max Select from Table 5 according to the stroke

(When using a custom stroke, select the longer standard stroke)

$M_3 \leq M_{3max}$

Table 5 Allowable torque (N·m)

Bore size (mm)	Model No.	Bearing	Stroke (mm)		
			10	20	25
ø12	STG-M	Metal bush bearing	0.30	0.25	
	STG-B	Ball bearing	0.39	0.28	
ø16	STG-M	Metal bush bearing	0.59	0.49	
	STG-B	Ball bearing	0.56	0.41	
ø20	STG-M	Metal bush bearing		0.90	
	STG-B	Ball bearing		0.70	
ø25	STG-M	Metal bush bearing		2.00	
	STG-B	Ball bearing		1.29	
ø32	STG-M	Metal bush bearing			4.35
	STG-B	Ball bearing			3.33
ø40	STG-M	Metal bush bearing			4.80
	STG-B	Ball bearing			3.68
ø50	STG-M	Metal bush bearing			9.56
	STG-B	Ball bearing			4.99
ø63	STG-M	Metal bush bearing			10.78
	STG-B	Ball bearing			5.63
ø80	STG-M	Metal bush bearing			15.01
	STG-B	Ball bearing			5.02
ø100	STG-M	Metal bush bearing			24.98
	STG-B	Ball bearing			8.04

* Refer to page 420 for allowable torque.

Step 6 Confirming cushion capacity

Calculate the kinetic energy of the load that is actually to be used, and confirm whether it can be absorbed by the allowable absorbed energy of cylinder or not.

- To obtain the allowable absorbed energy of cylinder (E), use the value in the graphs below.
- Formula for calculating kinetic energy of load

$$E = \frac{1}{2} x(W1+W2)xV^2$$

W1: Applied load (kg) W2: Movable part weight of cylinder (kg)

V: Stroke end speed (m/s)

Allowable absorbed energy value

Use in the range below and to the left of the curve. For use in the upper right range, provide an external shock absorber.

● STG-12 to 25

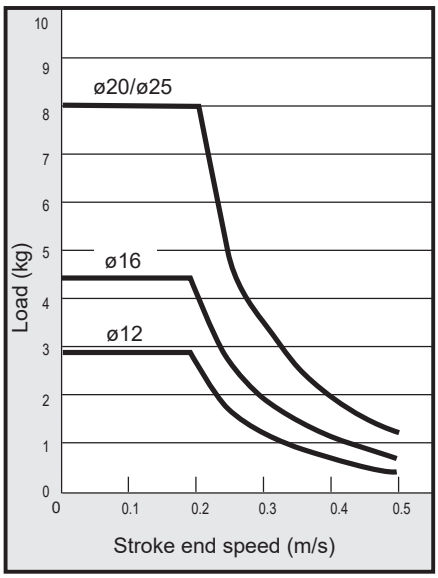

● STG-32 to 50

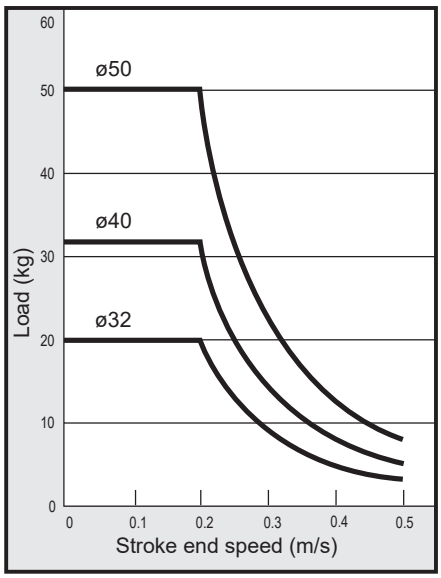

● STG-63 to 100

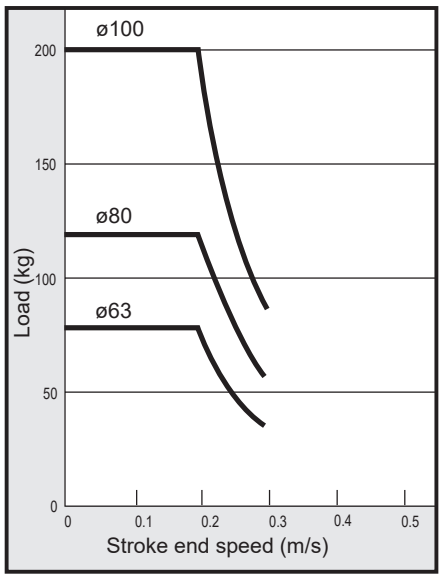

LCM
LCR
LCG
LCW
LCX
STM
STG
STS/STL
STR2
UCA2
ULK*
JSK/M2
JSG
JSC3/JSC4
USSD
UFCD
USC
UB
JSB3
LMB
LML
HCM
HCA
LBC
CAC4
UCAC2
CAC-N
UCAC-N
RCS2
RCC2
PCC
SHC
MCP
GLC
MFC
BBS
RRC
GRC
RV3*
NHS
HRL
LN
Hand
Chuk
MecHnd/Chuk
ShkAbs
FJ
FK
SpdContr
Ending

Selection guide

For vertical installation

● As for the total load weight, select so that the ratio of the load to the theoretical thrust is within the values in the table below.

Bore size	Load factor for theoretical thrust
12, 16	40% or less
20, 25	50% or less
32 to 80	60% or less
100	60% or less

*1 : For copper and PTFE free (M: metal bush bearing only), design the cylinder with the allowable value in the table below x 0.7.

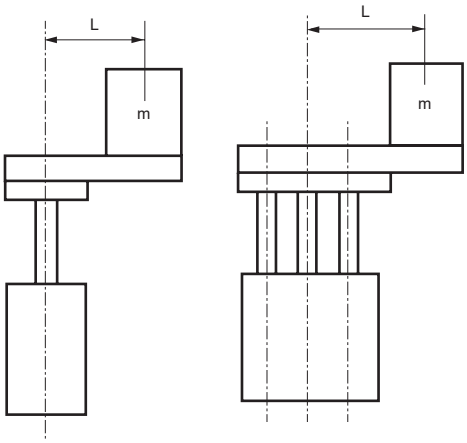

● STG-M-12 to 25
· 50 mm or less stroke

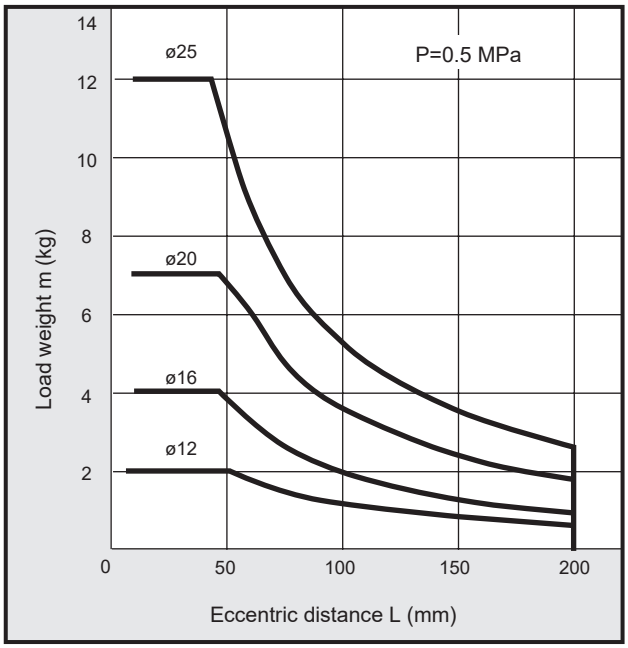

● STG-M-32 to 100
· 50 mm or less stroke

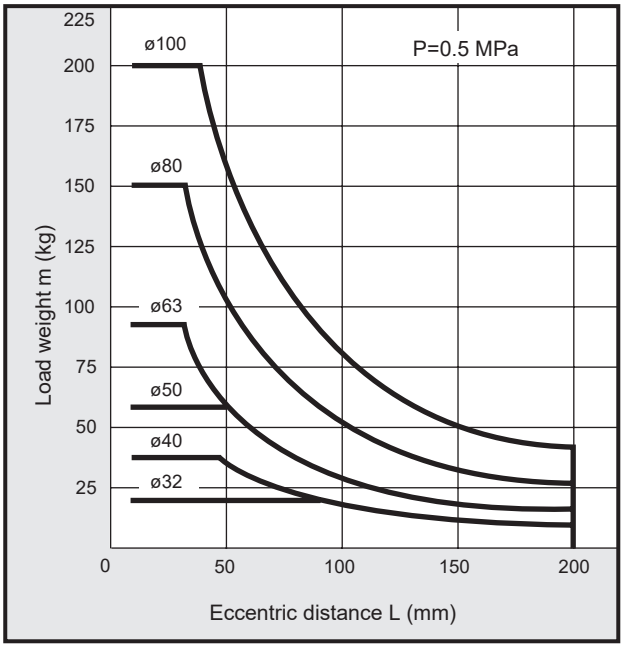

● STG-M-12 to 25
· Over 50 mm stroke

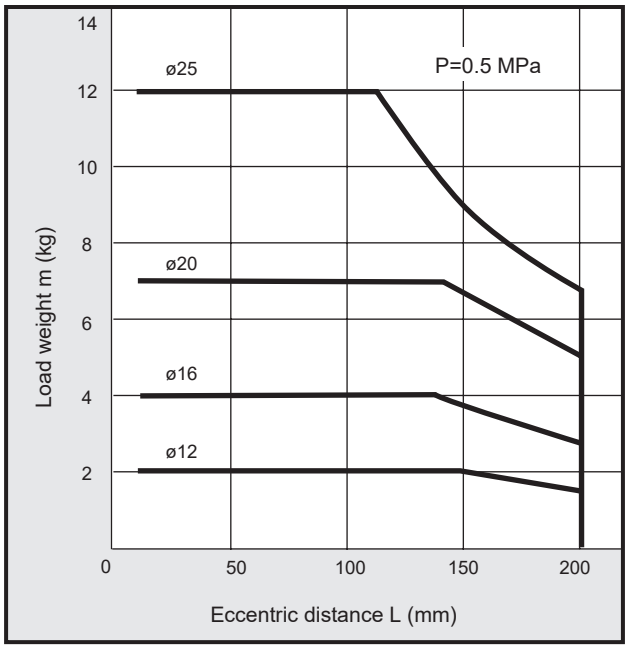

● STG-M-32 to 100
· Over 50 mm stroke

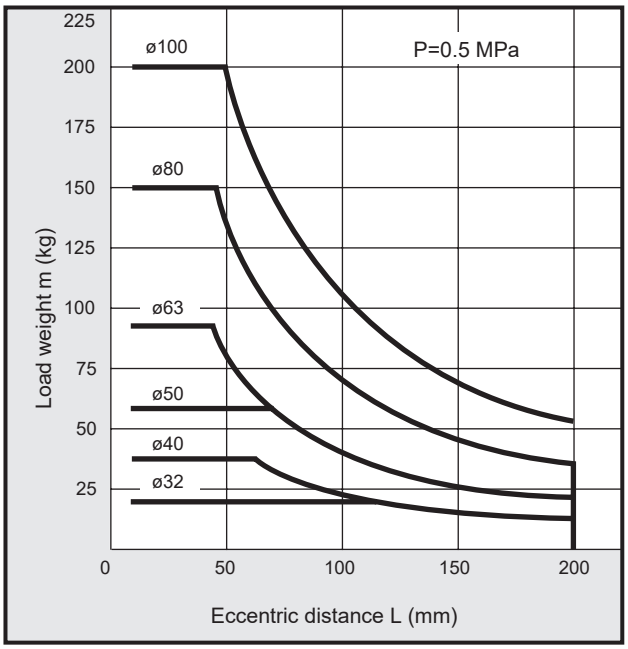

LCM
LCR
LCG
LCW
LCX
STM
STG
STS/STL
STR2
UCA2
ULK*
JSK/M2
JSG
JSC3/JSC4
USSD
UFCD
USC
UB
JSB3
LMB
LML
HCM
HCA
LBC
CAC4
UCAC2
CAC-N
UCAC-N
RCS2
RCC2
PCC
SHC
MCP
GLC
MFC
BBS
RRC
GRC
RV3*
NHS
HRL
LN
Hand
Chuk
MecHnd/Chuk
ShkAbs
FJ
FK
SpdContr
Ending

● STG-B-12 to 25
· 30 mm or less stroke

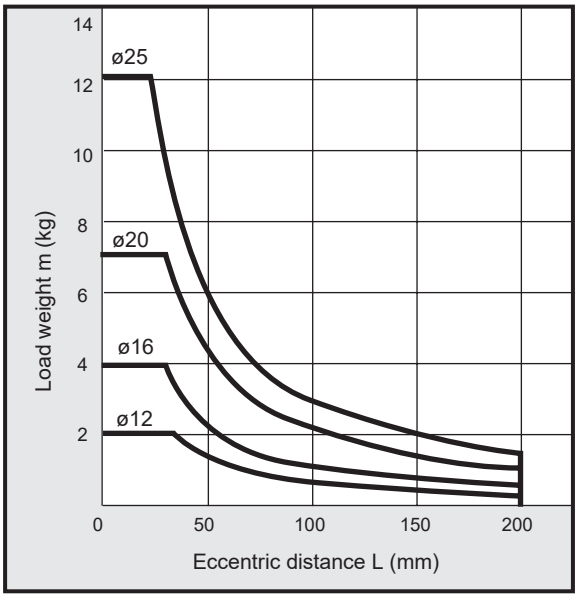

● STG-B-32 to 100
· 50 mm or less stroke

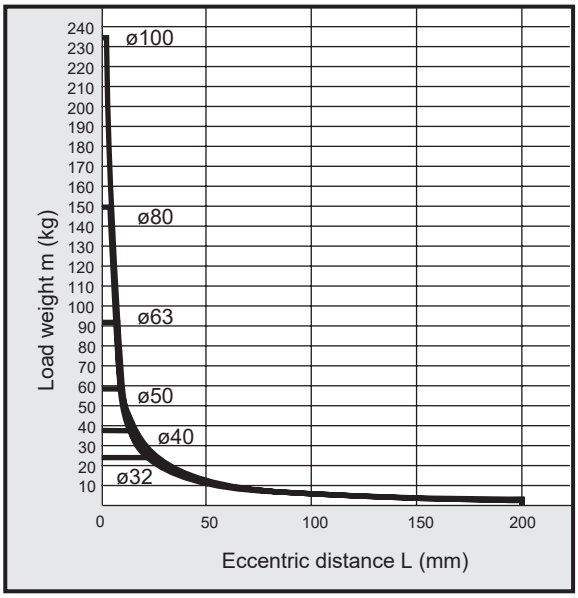

● STG-B-12 to 25
· Over 30 mm to 100 mm stroke

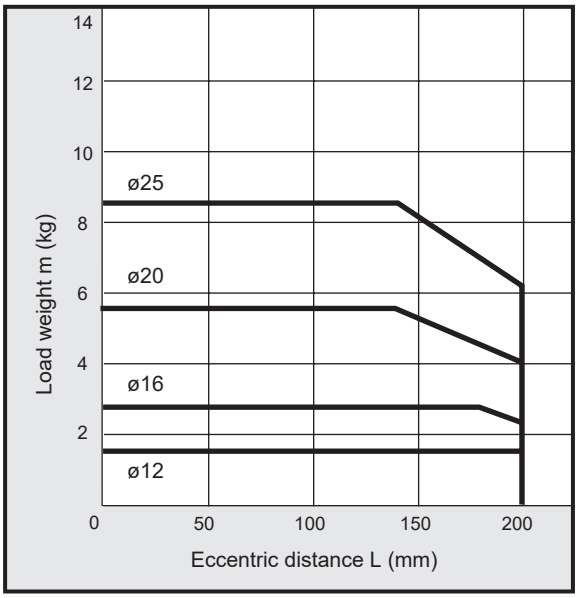

● STG-B-32 to 63
· Over 50 mm to 100 mm stroke

● STG-B-80, 100
· Over 50 mm to 200 mm stroke

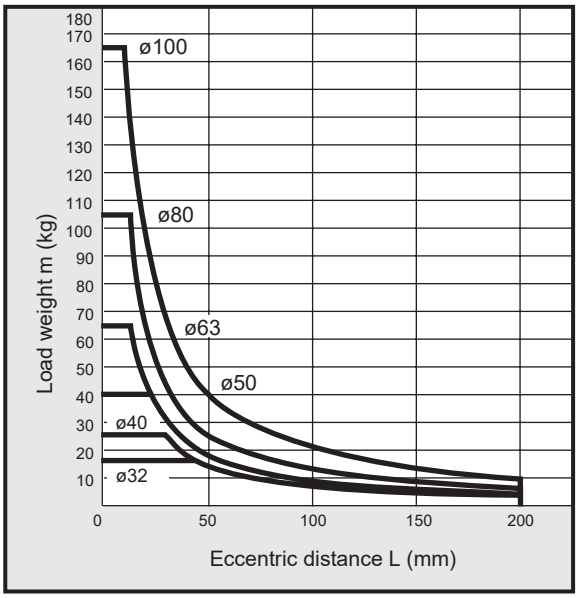

● STG-B-12 to 25
· Over 100 mm stroke

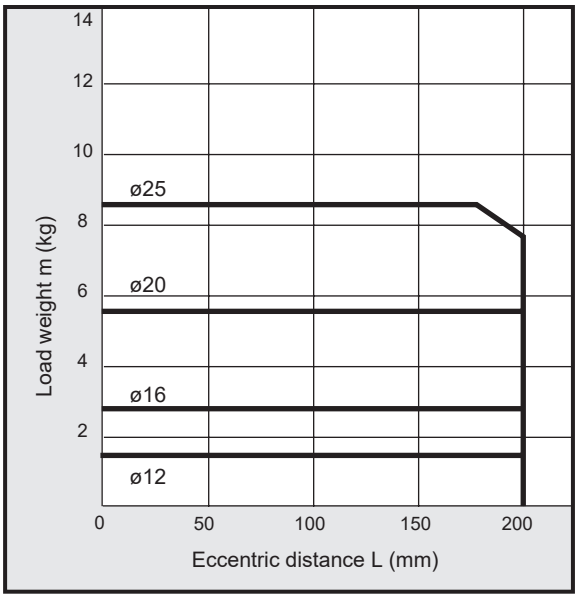

● STG-B-32 to 63
· Over 100 mm stroke

● STG-B-80, 100
· Over 200 mm stroke

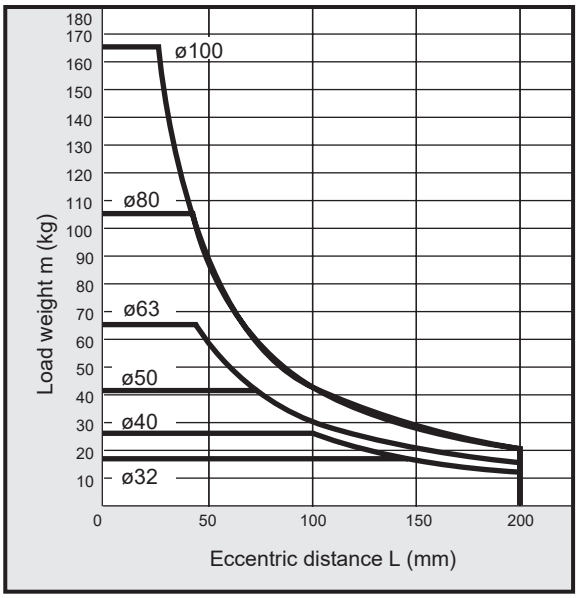

LCM
LCR
LCG
LCW
LCX
STM
STG
STS/STL
STR2
UCA2
ULK*
JSK/M2
JSG
JSC3/JSC4
USSD
UFCD
USC
UB
JSB3
LMB
LML
HCM
HCA
LBC
CAC4
UCAC2
CAC-N
UCAC-N
RCS2
RCC2
PCC
SHC
MCP
GLC
MFC
BBS
RRC
GRC
RV3*
NHS
HRL
LN
Hand
Chuk
MecHnd/Chuk
ShkAbs
FJ
FK
SpdContr
Ending

Selection guide

Deflection

For the runout amount δ produced at the end of the end plate when no load is applied, the value in the graph below is used as a guide. (Excluding deflection of guide rod)

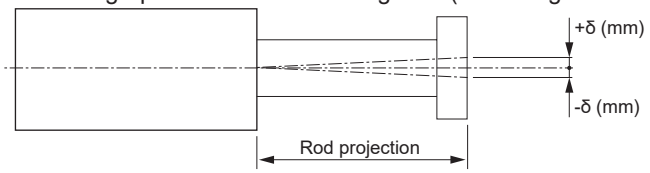

● ø12, ø16 Metal bush bearing
STG-M

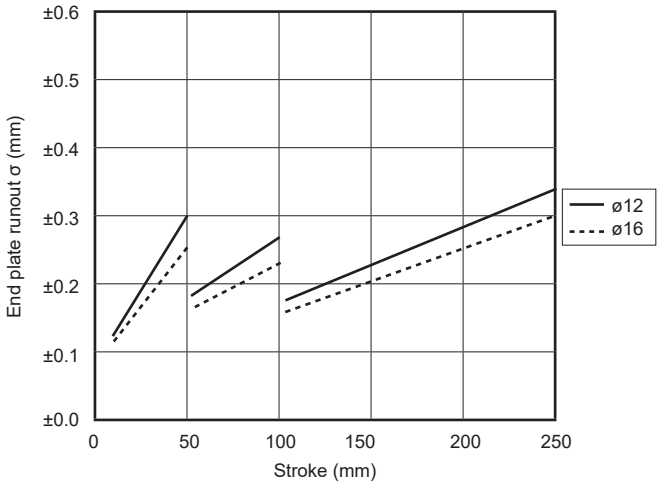

● ø12, ø16 ball bearing
STG-B

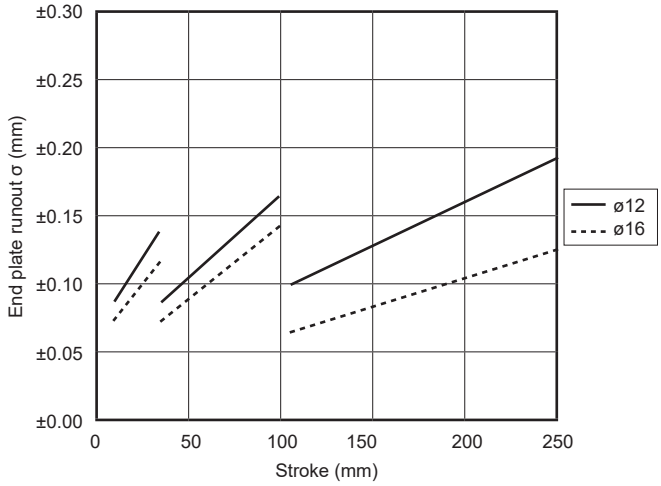

● ø20 to ø40 Metal bush bearing
STG-M

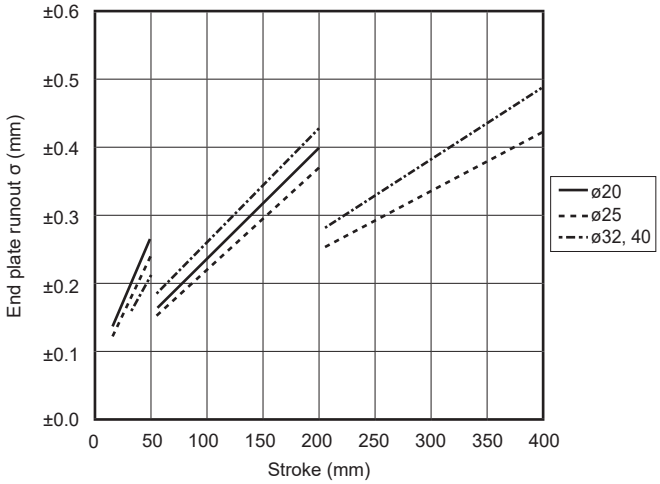

● ø20 to ø40 Ball bearing
STG-B

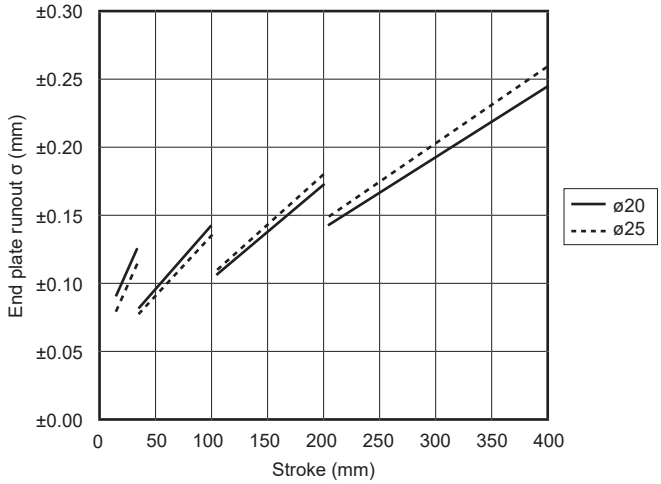

● ø50 to ø100 Metal bush bearing
STG-M

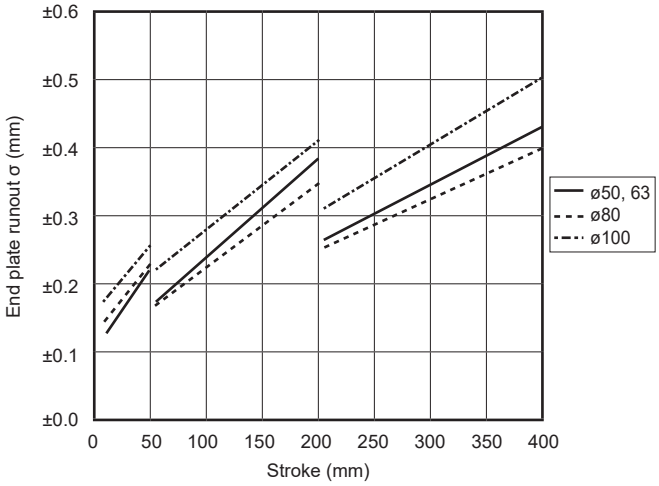

● ø50 to ø100 Ball bearing
STG-B

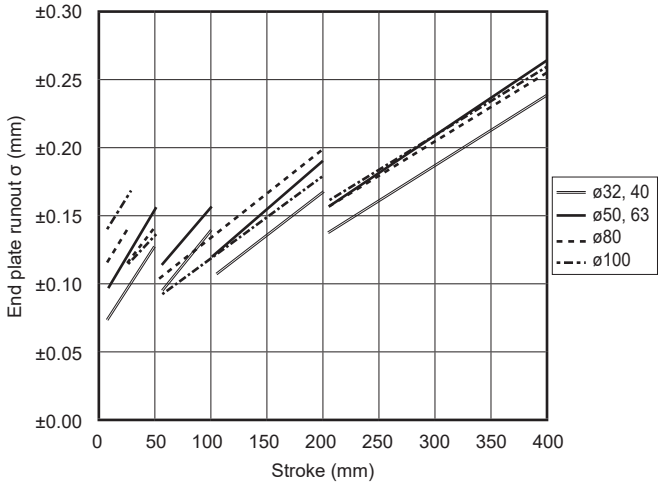

LCM
LCR
LCG
LCW
LCX
STM
STG
STS/STL
STR2
UCA2
ULK*
JSK/M2
JSG
JSC3/JSC4
USSD
UFCD
USC
UB
JSB3
LMB
LML
HCM
HCA
LBC
CAC4
UCAC2
CAC-N
UCAC-N
RCS2
RCC2
PCC
SHC
MCP
GLC
MFC
BBS
RRC
GRC
RV3*
NHS
HRL
LN
Hand
Chuk
MecHnd/Chuk
ShkAbs
FJ
FK
SpdContr
Ending

Specified range when using the product as a stopper

Impact load
STG-M-12, 16 (metal bush bearing)

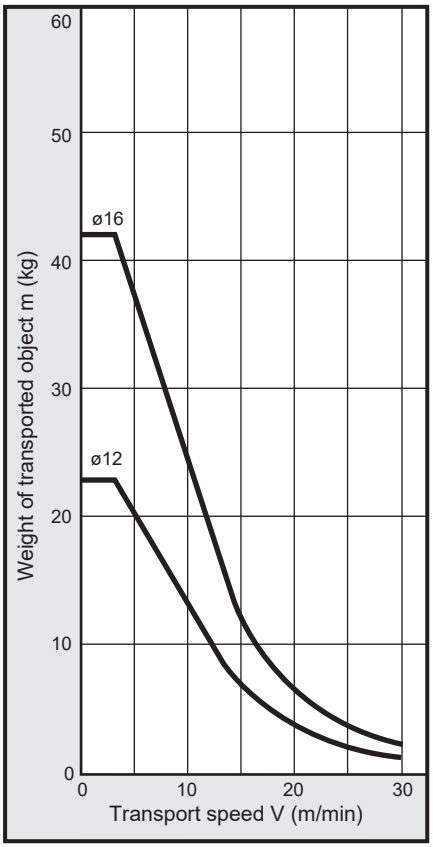

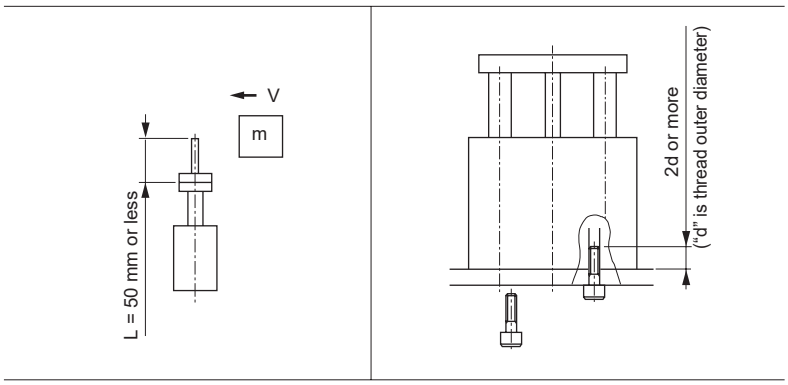

Safety precautions

*1 : When using the cylinder as a stopper, select a model with 50 mm stroke or less (STG-M). (30 mm or less stroke for ø12 to ø16)
*2 : Make sure that the total length of the stopper section L is 50 mm or less.
*3 : Make sure that the screw insertion depth of the bolt is 2d and over when fixing the cylinder body and consider countermeasures for preventing looseness (adhesive, spring washer, etc.).
(for ø80, make sure that the screw insertion depth is 1d. "d" is thread outer diameter)
*4 : STG-B (ball bearing) cannot be used as a stopper.

Impact load
STG-M-20 to 63 (metal bush bearing)

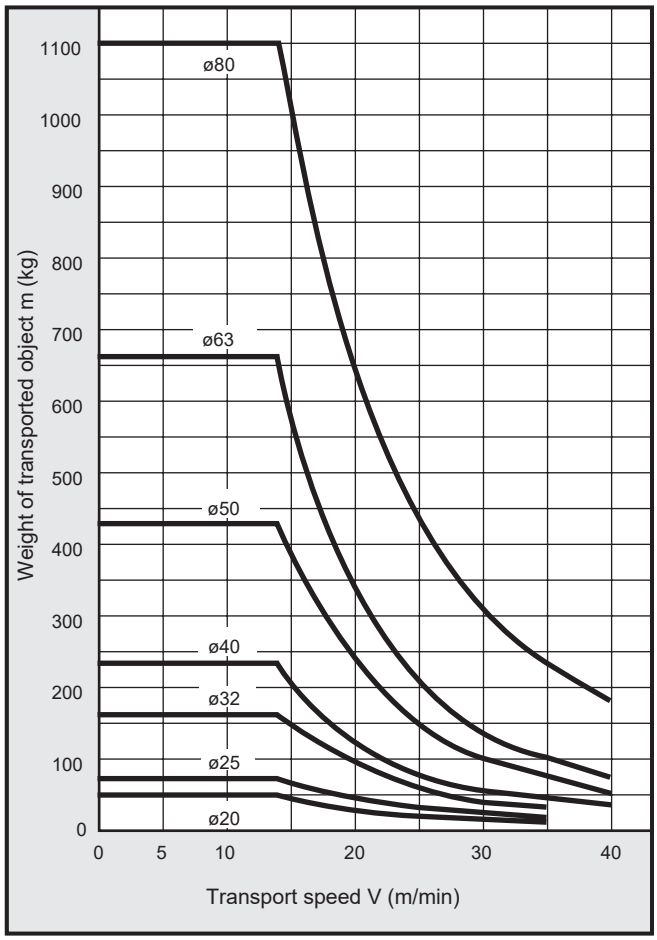

Impact load
STG-M-80/100 (metal bush bearing)

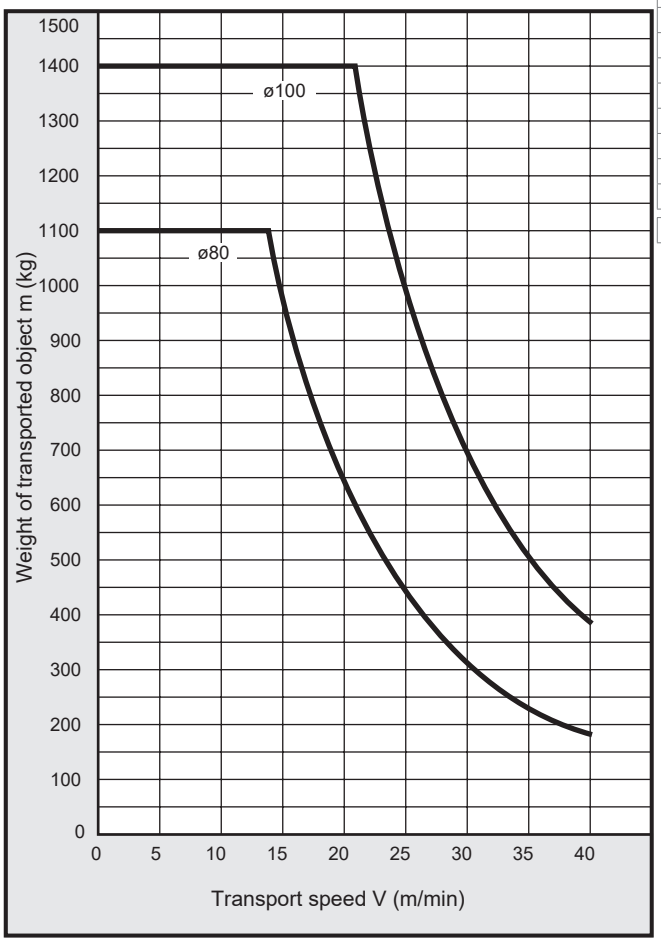

LCM
LCR
LCG
LCW
LCX
STM
STG
STS/STL
STR2
UCA2
ULK*
JSK/M2
JSG
JSC3/JSC4
USSD
UFCD
USC
UB
JSB3
LMB
LML
HCM
HCA
LBC
CAC4
UCAC2
CAC-N
UCAC-N
RCS2
RCC2
PCC
SHC
MCP
GLC
MFC
BBS
RRC
GRC
RV3*
NHS
HRL
LN
Hand
Chuk
MecHnd/Chuk
ShkAbs
FJ
FK
SpdContr
Ending

Selection guide

Allowable lateral load

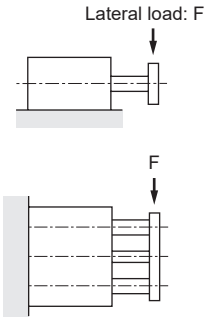

Unit: N

Bore size (mm)	Model No.	Bearing	Stroke (mm)			
			10	20	25	30
ø12	STG-M	Metal bush bearing	29	24		20
	STG-B	Ball bearing	38	27		22
ø16	STG-M	Metal bush bearing	51	42		36
	STG-B	Ball bearing	49	35		29
ø20	STG-M	Metal bush bearing		67		58
	STG-B	Ball bearing		52		42
ø25	STG-M	Metal bush bearing		125		110
	STG-B	Ball bearing		81		66
ø32	STG-M	Metal bush bearing			223	
	STG-B	Ball bearing			171	
ø40	STG-M	Metal bush bearing			223	
	STG-B	Ball bearing			171	
ø50	STG-M	Metal bush bearing			348	
	STG-B	Ball bearing			181	
ø63	STG-M	Metal bush bearing			348	
	STG-B	Ball bearing			181	
ø80	STG-M	Metal bush bearing			385	
	STG-B	Ball bearing			129	
ø100	STG-M	Metal bush bearing			531	
	STG-B	Ball bearing			171	

*1: For copper and PTFE free (M: metal bush bearing only), design the cylinder with the allowable value in the table above x 0.7.

Allowable torque

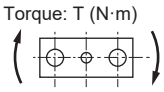

Unit: N·m

Bore size (mm)	Model No.	Bearing	Stroke (mm)			
			10	20	25	30
ø12	STG-M	Metal bush bearing	0.30	0.25		0.21
	STG-B	Ball bearing	0.39	0.28		0.23
ø16	STG-M	Metal bush bearing	0.59	0.49		0.42
	STG-B	Ball bearing	0.56	0.41		0.33
ø20	STG-M	Metal bush bearing		0.90		0.78
	STG-B	Ball bearing		0.70		0.57
ø25	STG-M	Metal bush bearing		2.00		1.75
	STG-B	Ball bearing		1.29		1.06
ø32	STG-M	Metal bush bearing			4.35	
	STG-B	Ball bearing			3.33	
ø40	STG-M	Metal bush bearing			4.80	
	STG-B	Ball bearing			3.68	
ø50	STG-M	Metal bush bearing			9.56	
	STG-B	Ball bearing			4.99	
ø63	STG-M	Metal bush bearing			10.78	
	STG-B	Ball bearing			5.63	
ø80	STG-M	Metal bush bearing			15.01	
	STG-B	Ball bearing			5.02	
ø100	STG-M	Metal bush bearing			24.98	
	STG-B	Ball bearing			8.04	

Non-rotating accuracy

(reference value)

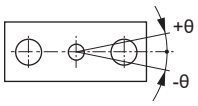

LCM
LCR
LCG
LCW
LCX
STM
STG
STS/STL
STR2
UCA2
ULK*
JSK/M2
JSG
JSC3/JSC4
USSD
UFCD
USC
UB
JSB3
LMB
LML
HCM
HCA
LBC
CAC4
UCAC2
CAC-N
UCAC-N
RCS2
RCC2
PCC
SHC
MCP
GLC
MFC
BBS
RRC
GRC
RV3*
NHS
HRL
LN
Hand
Chuk
MecHnd/Chuk
ShkAbs
FJ
FK
SpdContr
Ending

Unit: N

	Stroke (mm)											
	40	50	75	100	125	150	175	200	250	300	350	400
	18	16	20	17	15	13	12	10	9			
	34	29	21	16	12	11	9	8	6			
	32	28	36	31	27	24	21	19	16			
	50	43	31	25	20	17	15	13	10			
	51	46	60	51	45	40	36	33	28	24	21	19
	76	65	49	38	60	51	44	39	32	27	23	20
	98	88	112	97	85	76	69	63	53	46	41	37
	108	94	70	56	81	69	60	53	42	36	30	27
		180	179	156	138	124	112	103	88	77	68	61
		120	190	159	123	106	93	83	66	56	48	42
		180	179	156	138	124	112	103	88	77	68	61
		120	190	159	123	106	93	83	66	56	48	42
		286	292	257	230	208	190	174	150	132	118	106
		129	215	181	139	121	106	95	78	67	58	50
		286	292	257	230	208	190	174	150	132	118	106
		129	215	181	139	121	106	95	78	67	58	50
		326	345	309	280	256	235	218	190	169	151	137
		183	263	226	199	178	162	148	83	71	62	54
		460	475	429	392	360	333	310	272	243	219	199
		249	330	285	251	226	205	187	122	105	91	81

Unit: N·m

	Stroke (mm)											
	40	50	75	100	125	150	175	200	250	300	350	400
	0.18	0.16	0.21	0.18	0.15	0.13	0.12	0.11	0.09			
	0.35	0.30	0.21	0.17	0.13	0.11	0.09	0.08	0.07			
	0.36	0.32	0.42	0.35	0.31	0.27	0.24	0.22	0.18			
	0.58	0.50	0.36	0.28	0.23	0.19	0.17	0.15	0.12			
	0.69	0.62	0.80	0.69	0.61	0.54	0.49	0.44	0.37	0.32	0.29	0.26
	1.02	0.88	0.66	0.52	0.80	0.69	0.60	0.53	0.43	0.36	0.31	0.27
	1.56	1.41	1.80	1.55	1.37	1.22	1.10	1.00	0.85	0.74	0.66	0.59
	1.74	1.50	1.13	0.90	1.29	1.11	0.96	0.85	0.68	0.57	0.49	0.42
		3.50	3.48	3.04	2.69	2.42	2.19	2.01	1.72	1.50	1.33	1.20
		2.34	3.70	3.10	2.40	2.07	1.82	1.61	1.29	1.09	0.94	0.82
		3.86	3.84	3.35	2.97	2.66	2.42	2.21	1.89	1.65	1.47	1.32
		2.58	4.08	3.42	2.65	2.28	2.00	1.78	1.43	1.20	1.03	0.90
		7.86	8.02	7.07	6.32	5.71	5.21	4.79	4.13	3.63	3.23	2.92
		3.56	5.90	4.99	3.83	3.32	2.93	2.61	2.16	1.83	1.58	1.39
		8.86	9.04	7.97	7.12	6.44	5.88	5.41	4.66	4.09	3.65	3.29
		4.01	6.66	5.62	4.32	3.75	3.30	2.94	2.43	2.06	1.78	1.57
		12.70	13.46	12.05	10.92	9.98	9.18	8.51	7.42	6.58	5.90	5.36
		7.13	10.25	8.81	7.77	6.96	6.30	5.76	3.23	2.76	2.40	2.12
		21.60	22.32	20.17	18.40	16.92	15.66	14.57	12.79	11.40	10.28	9.37
		11.69	15.53	13.38	11.81	10.60	9.62	8.81	5.75	4.92	4.29	3.79

Item	Non-rotating accuracy θ (degrees)	
Bore size (mm)	Metal bush bearing	Ball bearing
ø12	±0.08	±0.06
ø16		
ø20	±0.07	±0.05
ø25		
ø32	±0.06	±0.04
ø40		
ø50	±0.05	±0.03
ø63		
ø80		
ø100		

(Default at PULL) Note: Excluding sag of guide rod

LCM
LCR
LCG
LCW
LCX
STM
STG
STS/STL
STR2
UCA2
ULK*
JSK/M2
JSG
JSC3/JSC4
USSD
UFCD
USC
UB
JSB3
LMB
LML
HCM
HCA
LBC
CAC4
UCAC2
CAC-N
UCAC-N
RCS2
RCC2
PCC
SHC
MCP
GLC
MFC
BBS
RRC
GRC
RV3*
NHS
HRL
LN
Hand
Chuk
MecHnd/Chuk
ShkAbs
FJ
FK
SpdContr
Ending

Allowable lateral load Metal bush bearing

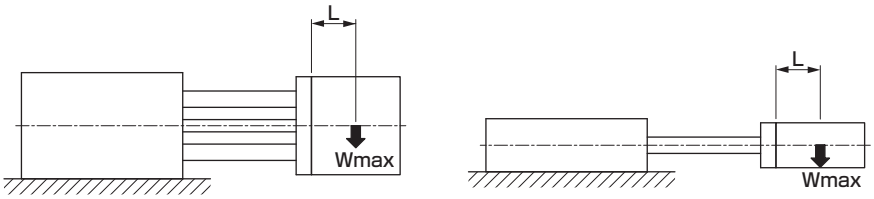

Wmax: Lateral load (kg)
L: Load center of gravity position (mm)

STG-M-12 to 100

● When L = 50 mm

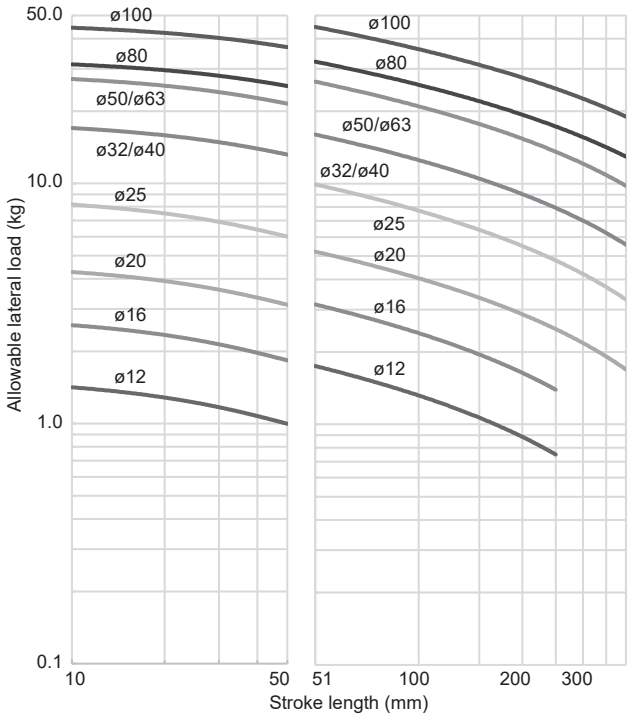

● When L = 100 mm

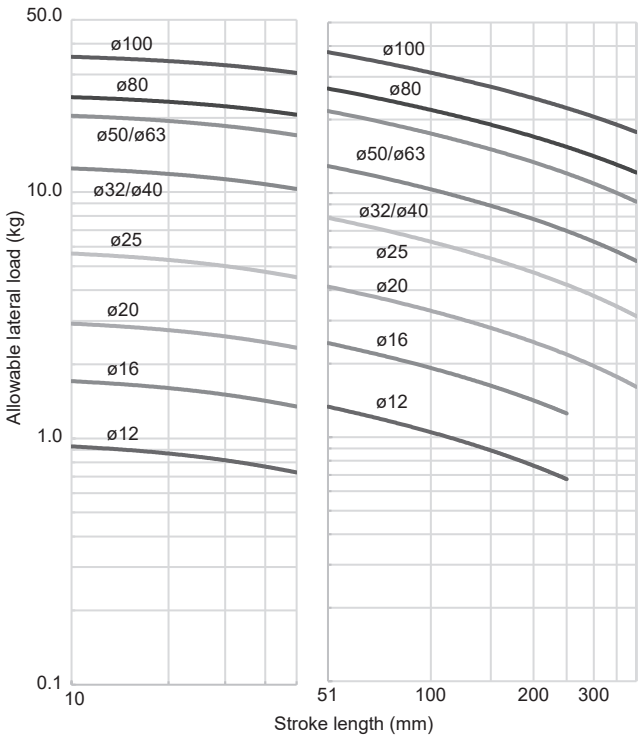

Note: For copper and PTFE free, design with 70% of the values in the graph above.

Allowable lateral load Ball bearing

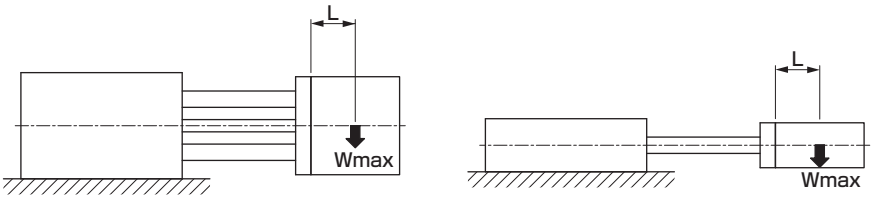

Wmax: Lateral load (kg)
L: Load center of gravity position (mm)

STG-B-12 to 25

● When L = 50 mm

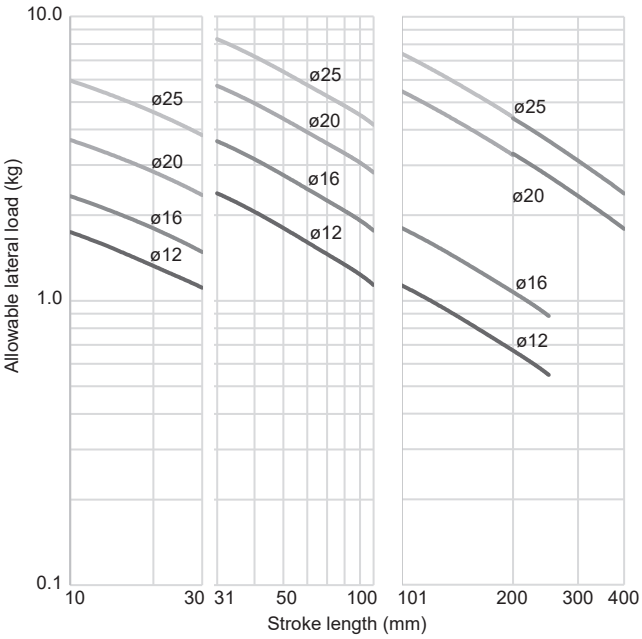

● When L = 100 mm

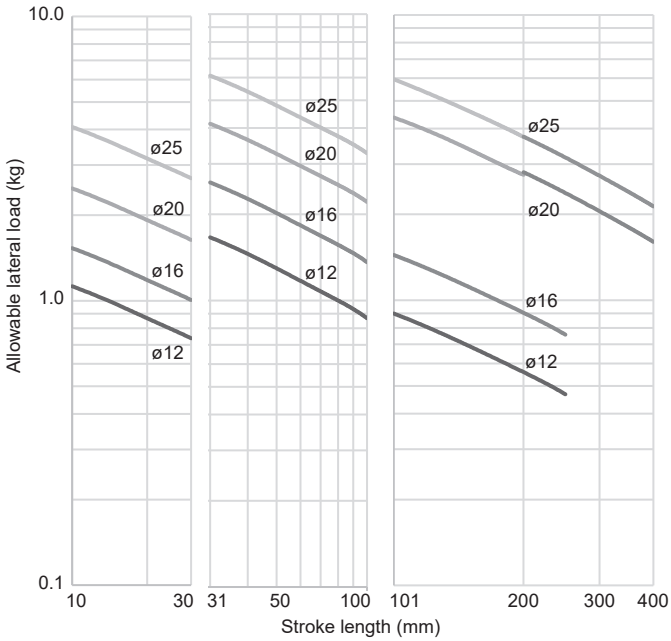

LCM
LCR
LCG
LCW
LCX
STM
STG
STS/STL
STR2
UCA2
ULK*
JSK/M2
JSG
JSC3/JSC4
USSD
UFCD
USC
UB
JSB3
LMB
LML
HCM
HCA
LBC
CAC4
UCAC2
CAC-N
UCAC-N
RCS2
RCC2
PCC
SHC
MCP
GLC
MFC
BBS
RRC
GRC
RV3*
NHS
HRL
LN
Hand
Chuk
MecHnd/Chuk
ShkAbs
FJ
FK
SpdContr
Ending

STG-B-32 to 63

● When L = 50 mm

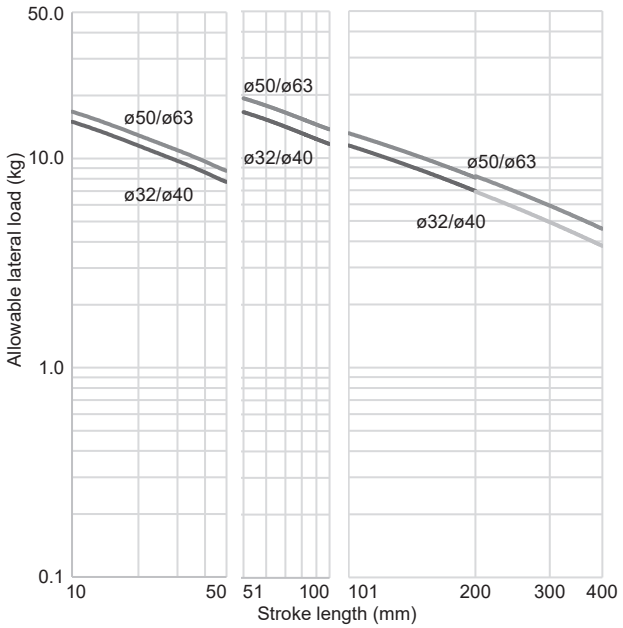

● When L = 100 mm

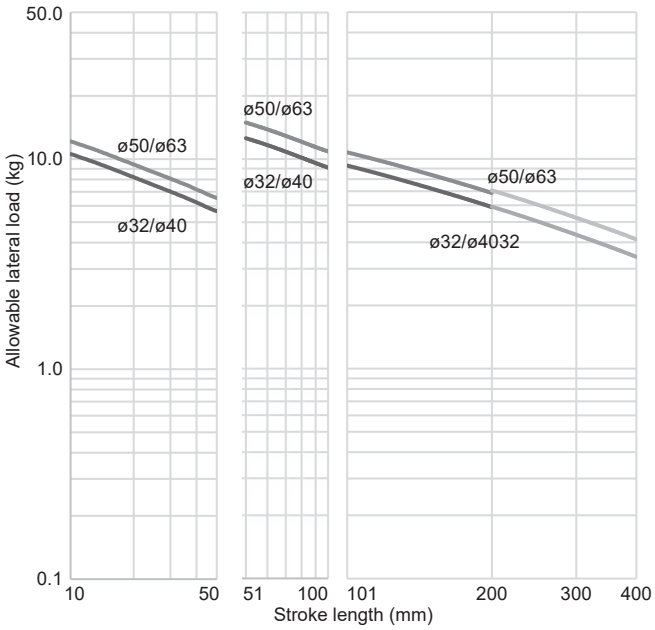

STG-B-80/100

● When L = 50 mm

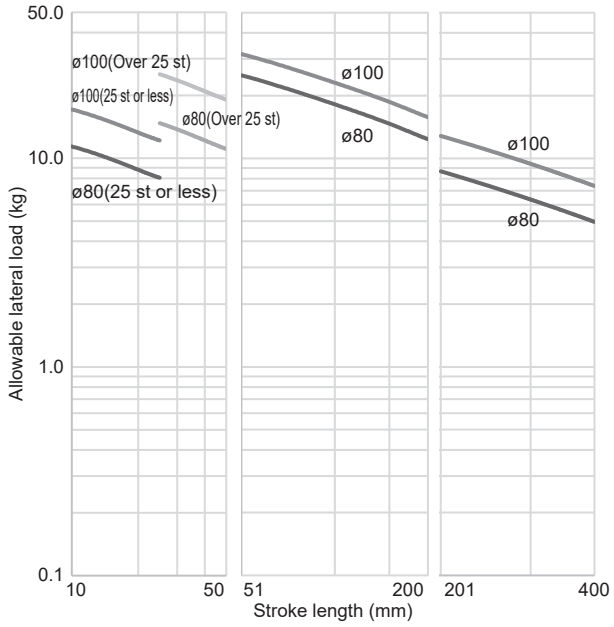

● When L = 100 mm

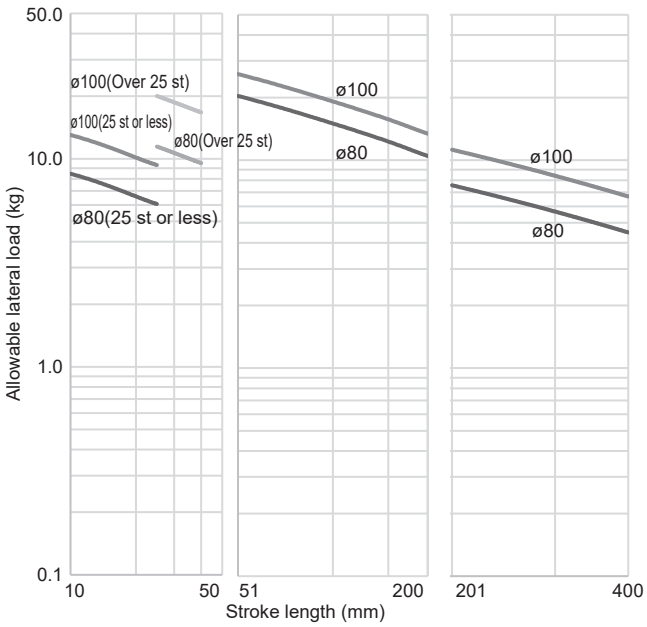

Selection guide

■ Movable part weight table

● STG-M movable part weight table

Unit: kg

Bore size (mm)	Stroke (mm)															
	10	20	25	30	40	50	75	100	125	150	175	200	250	300	350	400
ø12	0.12	0.13		0.14	0.15	0.16	0.20	0.23	0.27	0.30	0.32	0.35	0.40			
ø16	0.16	0.18		0.19	0.21	0.22	0.29	0.33	0.41	0.45	0.49	0.53	0.62			
ø20		0.33		0.35	0.38	0.40	0.52	0.58	0.64	0.70	0.76	0.82	1.00	1.13	1.24	1.35
ø25		0.52		0.56	0.60	0.64	0.84	0.95	1.05	1.15	1.25	1.34	1.66	1.87	2.06	2.26
ø32			1.07			1.23	1.42	1.58	1.74	1.90	2.07	2.23	2.73	3.06	3.40	3.71
ø40			1.14			1.30	1.49	1.65	1.81	1.98	2.14	2.30	2.82	3.13	3.47	3.78
ø50			2.15			2.40	2.75	3.00	3.26	3.51	3.76	4.02	4.85	5.37	5.88	6.38
ø63			2.50			2.75	3.09	3.35	3.60	3.86	4.11	4.36	5.19	5.70	6.21	6.72
ø80			3.76			3.99	4.38	4.61	4.84	5.08	5.31	5.54	6.29	6.76	7.23	7.69
ø100			6.56			7.08	7.96	8.48	8.99	9.50	10.01	10.53	12.17	13.19	14.22	15.24

● STG-B movable part weight table

Unit: kg

Bore size (mm)	Stroke (mm)															
	10	20	25	30	40	50	75	100	125	150	175	200	250	300	350	400
ø12	0.11	0.11		0.12	0.13	0.14	0.16	0.17	0.20	0.22	0.23	0.25	0.29			
ø16	0.15	0.16		0.17	0.20	0.21	0.24	0.27	0.32	0.35	0.38	0.41	0.47			
ø20		0.31		0.33	0.37	0.39	0.44	0.48	0.56	0.60	0.65	0.70	0.80	0.90	1.00	1.09
ø25		0.49		0.52	0.58	0.61	0.69	0.76	0.88	0.95	1.02	1.10	1.28	1.44	1.58	1.72
ø32			0.82			0.94	1.11	1.23	1.40	1.53	1.65	1.77	2.07	2.30	2.54	2.78
ø40			0.89			1.01	1.18	1.30	1.48	1.60	1.72	1.83	2.14	2.38	2.61	2.84
ø50			1.77			1.95	2.24	2.45	2.71	1.89	3.08	3.27	3.76	4.13	4.50	4.87
ø63			2.11			2.30	2.59	2.77	3.05	3.25	3.43	3.61	4.11	4.48	4.84	5.21
ø80			3.54			3.81	4.12	4.31	4.50	4.69	4.88	5.07	5.58	5.97	6.35	6.73
ø100			6.21			6.91	7.69	8.10	8.51	8.93	9.34	9.75	10.83	11.65	12.48	13.30

Pneumatic components

Safety Precautions

Be sure to read this section before use.

Refer to Intro Page 73 for general information of the cylinder, and to Intro Page 80 for general information of the cylinder switch.

Product-specific cautions: Guided cylinder STG Series

Design/selection

1. Common

CAUTION

■ When using the metal bush bearing with a long stroke at low speed, stick-slip may occur depending on load conditions. In this case, use the ball bearing.

2. Rubber air-cushioned STG-*C

CAUTION

■ Note that, structurally, the stroke end position cannot be retained if air supply is cut off.
When detecting the stroke end by switch, set the switch position with pneumatic pressure applied, as otherwise the position may be out of the detection range.

3. Position locking STG-$^{M}_{B}$Q

WARNING

■ If pressure is supplied to port A when both ports are not pressurized and the piston is locked, the lock may not be released or the piston rod may suddenly pop out just after the lock is released. This can be extremely hazardous. To release the lock mechanism, make sure to supply pressure to port B. Check that load is not applied to the lock mechanism.

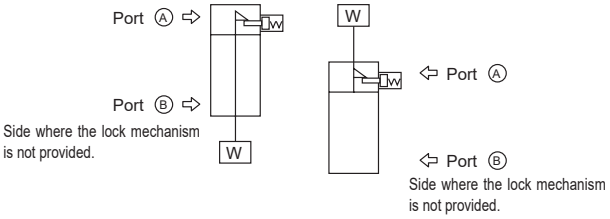

■ For usage where the drop rate is increased using the quick exhaust valve, the lock may not release normally because the cylinder body starts operating before the lock pin. For the position locking cylinder, do not use the quick exhaust valve.

■ Do not use 3-position valves.
Do not use the cylinder by combining with the 3-position (especially, closed center metal seal) valves. If the port at the side where the lock mechanism is provided is pressurized, the lock cannot be engaged.
Even if it is locked once, the air leaked from the valve may enter the cylinder, and the lock may be released after a certain period of time.

CAUTION

■ Cylinder load factor must be 50% or less.
If the load factor is high, the lock may not be released, or the lock section may be damaged.

■ If back pressure is applied to the locking mechanism, the lock may be released. Use a single valve, or an individual exhaust manifold.

■ Do not use multiple synchronized cylinders.
Do not use so that 1 workpiece is moved by synchronizing 2 or more position locking cylinders. Lock release may fail for one of the cylinders.

4. Coolant proof STG-MG$^{2}_{3}$

CAUTION

■ Do not apply an eccentric load to the piston rod.
The service life of the scraper or bearing could be shortened.

■ If the piston rod is not exposed to splattered coolant or water, use the G or G1 Series.
In the case that the G2 or G3 Series are not exposed to splattering of coolant or water, the lubrication of the piston rod will run out and the service life will be shortened.

5. Anti-spatter adherence STG-$^{M}_{B}$G4

CAUTION

■ The durability of this cylinder series is improved in comparison to standard cylinders when used in an atmosphere exposed to spatter. But durability may be shorter than the standard cylinder when used in other atmospheres.

Mounting, installation and adjustment

1 . Common

⚠ CAUTION

■ Be sure to attach a speed controller during piping before use. The available fittings are as below.

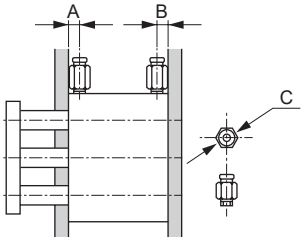

Item / Bore size (mm)	Port size	Port position A	Port position B	Applicable fittings	Fitting O.D. øC
ø12	M 5 x 0.8	12	7	SC3W-M5-4 SC3W-M5-6 GWS4-M5-S GWS4-M5 GWL4-M5 GWL6-M5 GWS6-M5	ø12 or less
ø16		12	7.5		
ø20	Rc1/8	10.5	8.5	SC3W-6-4/6/8 GWS 4-6 GWS 6-6 GWS 8-6 GWL4-6 GWL6-6	ø15 or less
ø25		11.5	9		
ø32		12.5	9		
ø40		14	10		
ø50	Rc1/4	14	11	SC3W-8-6/8/10 GWS4-8 GWS6-8 GWS10-8 GWS12-8 GWL4 to 12-8	ø21 or less
ø63		16.5	15		
ø80	Rc3/8	19	15	SC3W-10-8/10/12 GWS6-10 GWS8-10 GWS 10-10 GWL6 to 12-10	ø28 or less
ø100	Rc3/8	17	19	SC3W-10-8/10/12 GWS6-10 GWS8-10 GWS 10-10 GWL6 to 12-10	ø28 or less

■ Do not damage surface flatness by denting or scratching the tube main body mounting surface or the end plate surface in order to increase sliding resistance. Make sure that the flatness of the mating surface where the end plate will be attached is 0.03 mm or below. If it is difficult to ensure the above flatness, insert a shim (customer-provided) between the end plate and workpiece and adjust the clearance. This may prevent an increase in sliding resistance.

■ When mounting the body with the through bolt, tighten with tightening torque as shown in the table below.

ø12	1.5 to 2.7 N·m
ø16	
ø20/ø25	3 to 5.4 N·m
ø32/ø40	5.2 to 9.2 N·m
ø50/ø63	12.5 to 22 N·m
ø80	24.5 to 44 N·m
ø100	42 to 76 N·m

■ Allowable absorbed energy value
Use this cushion within the range of the allowable absorbed energy. When the unit will be used where the allowable absorbed energy will be exceeded, provide a separate external shock absorber. For details on the allowable absorbed energy value, refer to the specification field or selection guide.

■ The cylinder switch may malfunction if there is a magnetic substance such as a metal plate installed adjacently. Check that a distance of 10 mm or more is provided from the surface of the cylinders.
(All bore sizes common)

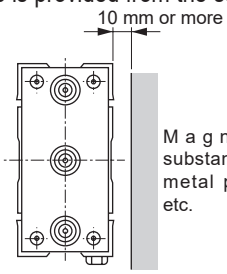

■ The cylinder switch may malfunction if cylinders are installed adjacently. Check that the following distances are provided between cylinders. (All bore sizes common)

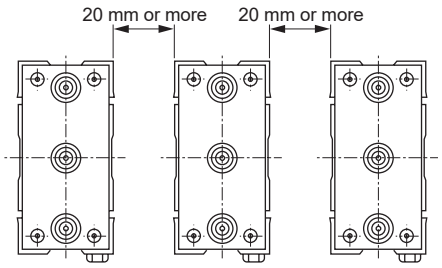

■ Do not rotate the piston rod, except when disassembling the product for maintenance, etc. Do not rotate the piston rod, as misalignment may occur, destabilizing operation.

2 . Position locking

⚠ CAUTION

■ The lock mechanism functions on the stroke end, so that if the stopper is engaged during the stroke by the external stopper, the lock mechanism may not work and the piston could fall. When setting a load, make sure to check that the lock mechanism functions before installing the product.

■ Supply pressure equal to or higher than the min. working pressure to the port on the lock mechanism side.

■ When the piping at the side where the lock mechanism is provided is long and thin, or when the speed controller is far away from the cylinder port, note that it takes time to engage the lock. Note that clogging in the silencer mounted on the EXH port of the valve may cause the same result.

■ Cylinder load factor must be 50% or less. If the load factor is high, the lock may not be released, or the lock section may be damaged.

3 . Clean-room specifications

⚠CAUTION

■ Open the package in a cleanroom.

● This product is packed in a cleanroom. The package should be opened just before piping in the cleanroom.

Use/maintenance

1. Rubber air-cushioned STG-$^{M}_{B}$-*C

⚠CAUTION

■ Do not rapidly discharge air from the cylinder after performing low speed operation outside the catalog specifications range.
(Example: Removing piping or coupler, etc.)
Otherwise the rubber air cushion may fall. Note that the possibility of occurrence of this may increase especially when the air pressure is high.

2. Position locking STG-$^{M}_{B}$Q

⚠WARNING

■ For safety purposes, prevent the load from falling under its own weight during maintenance.

■ In the case of the cylinder with air cushion, if the air cushion needle at the lock mechanism side is tightened excessively, the piston bounds at the stroke end and the sleeve and stopper piston collide strongly, which may result in damage to the locking mechanism. Also, if the air cushion needle is opened too much, the piston bounces off at the stroke end, which may similarly damage the mechanism. Adjust the needle of the air cushion so that there is no bound.

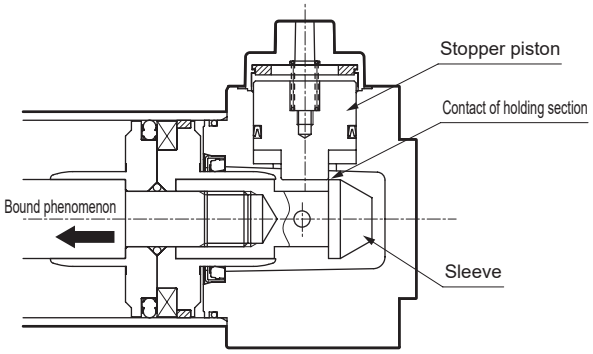

■ When stopping the piston with an external buffer device (shock absorber, etc.), adjust it similarly so that there is no bound.
Inspect the piston once or twice a year to make sure there is no damage to the retainer caused by this phenomenon.

⚠CAUTION

■ After the lock mechanism is manually operated, make sure to confirm manual operation and return the mechanism to the original state before use. Do not perform manual operation except for adjustment, as it is dangerous.

■ When mounting or adjusting the cylinder, release the lock.
If mounting work, etc., is done while the lock is engaged, the lock part may be damaged.

■ Use the speed controller with meter-out.
If the meter-in control is used, the lock may not be able to be released.

■ At the side where the lock mechanism is attached, be sure to use the cylinder from the stroke end.
If the cylinder piston does not reach the stroke end, the lock may not be engaged or the lock may not be able to be released.

3. Clean-room specifications

⚠WARNING

■ Fluorine grease is used for P7 Series.
Smoking with hands smeared with fluorine grease could generate harmful gases and cause physical harm.

MEMO

LCM
LCR
LCG
LCW
LCX
STM
STG
STS/STL
STR2
UCA2
ULK*
JSK/M2
JSG
JSC3/JSC4
USSD
UFCD
USC
UB
JSB3
LMB
LML
HCM
HCA
LBC
CAC4
UCAC2
CAC-N
UCAC-N
RCS2
RCC2
PCC
SHC
MCP
GLC
MFC
BBS
RRC
GRC
RV3*
NHS
HRL
LN
Hand
Chuk
MecHnd/Chuk
ShkAbs
FJ
FK
SpdContr
Ending

Load-resistant, shock-resistant STG-K Series

The robust guide rod is tough enough to withstand a high impact.

Powerful

- More resistant to load and shock than the conventional guided cylinders.
  (Compared with our STG-M Series)
- The improved fastening mechanism combines the guide rod and end plate tightly.

Shock resistance ranked two levels higher!

STG-K ø32
(Guide rod diameter 25 mm)

STG-M Series
Covers ø32/40/50
(Guide rod diameter 20 to 25 mm)

STG-K ø50
(Guide rod diameter 30 mm)

STG-M Series
Covers ø50/63/80
(Guide rod diameter 25 to 30 mm)

LCM
LCR
LCG
LCW
LCX
STM
STG
STS/STL
STR2
UCA2
ULK*
JSK/M2
JSG
JSC3/JSC4
USSD
UFCD
USC
UB
JSB3
LMB
LML
HCM
HCA
LBC
CAC4
UCAC2
CAC-N
UCAC-N
RCS2
RCC2
PCC
SHC
MCP
GLC
MFC
BBS
RRC
GRC
RV3*
NHS
HRL
LN
Hand
Chuk
MecHnd/Chuk
ShkAbs
FJ
FK
SpdContr
Ending

●: Standard, ◎: Option

Variation	Model No. JIS symbol	Bore size (mm)	Standard stroke length (mm)								Min. stroke length (mm) *1	Max. stroke length (mm)	Custom stroke length (per mm) *2	Switch	Page
			25	50	75	100	125	150	175	200					
Double acting/ guide rod	STG-K 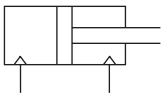	ø32/ø50	●	●	●	●	●	●	●	●	5 (10)	200	5	◎	432

*1 : The value in ( ) for min. stroke length is for switches of the 2-color display and AC magnetic field proof.
*2 : Custom stroke is handled by attaching a spacer to the standard stroke length cylinder.
For dedicated bodies corresponding to stroke length, contact CKD separately.

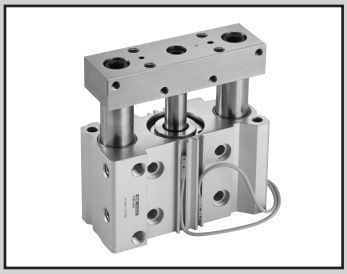

Guided cylinder, double acting/heavy duty guide rod

STG-K Series

● Bore size: ø32, ø50

JIS symbol

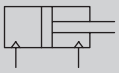

RoHS CAD

Specifications

Item		STG-K	
Bore size	mm	ø32	ø50
Actuation		Double acting	
Working fluid		Compressed air	
Max. working pressure	MPa	1.0 (≈150 psi, 10 bar)	
Min. working pressure	MPa	0.1 (≈15 psi, 1 bar) *1	
Proof pressure	MPa	1.6 (≈230 psi, 16 bar)	
Ambient temperature	°C	-10 (14°F) to 60 (140°F) (no freezing)	
Port size		Rc1/8	Rc1/4
Stroke tolerance	mm	+2.0 0	
Working piston speed	mm/s	50 to 400	
Cushion		With rubber cushion	
Lubrication		Not required (use turbine oil class 1 ISO VG32 if necessary for lubrication)	
Allowable absorbed energy	J	0.401	0.980

*1: For rubber-air cushion, this value will be 0.2 MPa.

Stroke length

Standard stroke length (mm)	Max. stroke length (mm)	Min. stroke length (mm)	Min. stroke with switch (mm)
25/50/75/100/125/150/175/200	200	5	5(10) *2

*1: The custom stroke length is available in 5 mm increments.
However, the total length is the same as that of the next longer standard stroke length.
*2: For types with one or two switches. The value in ( ) is the min. stroke length for switches of the 2-color display and AC magnetic field proof.

Switch specifications

● 1-color/2-color display/for AC magnetic field proof

Item	Proximity 2-wire	Proximity 2-wire			Proximity 3-wire				Reed 2-wire							Proximity 2-wire
	T1H/ T1V	T2H/T2V/ T2JH/T2JV	T2YH/ T2YV	T2WH/ T2WV	T3H/ T3V	T3PH/ T3PV	T3YH/ T3YV	T3WH/ T3WV	T0H/T0V		T5H/T5V		T8H/T8V			T2YD(*4) T2YDT
Applications	For programmable controller, relay, compact solenoid valve	Dedicated for programmable controller			For programmable controller, relay				For programmable controller, relay		For programmable controller, relay, IC circuit (no indicator lamp), serial connection		For programmable controller, relay			For programmable controller
Output method	-				NPN output	PNP output	NPN output	NPN output	-							
Pwr. supp. V.	-				10 to 28 VDC				-							
Load voltage	85 to 265 VAC	10 to 30 VDC		24 VDC ±10%	30 VDC or less				12/24 VDC	100/110 VAC	5/12/24 VDC	100/110 VAC	12/24 VDC	110 VAC	220 VAC	24 VDC ±10%
Load current	5 to 100 mA	5 to 20 mA (*3)			100 mA or less		50 mA or less		5 to 50 mA	7 to 20 mA	≤50 mA	≤20 mA	5 to 50 mA	7 to 20 mA	7 to 10 mA	5 to 20 mA
Indicator lamp	LED (Lit when ON)	LED (Lit when ON)	Red/green LED (Lit when ON)	Red/green LED (Lit when ON)	LED (Lit when ON)	Yellow LED (Lit when ON)	Red/green LED (Lit when ON)	Red/green LED (Lit when ON)	LED (Lit when ON)		Without indicator lamp		LED (Lit when ON)			Red/green LED (Lit when ON)
Leakage current	≤ 1 mA at 100 VAC, ≤ 2 mA at 200 VAC	1 mA or less			10 μA or less				0 mA							1 mA or less
Weight g	1 m:33 3 m:87 5 m:142	1 m:18 3 m:49 5 m:80	1 m:33 3 m:87 5 m:142	1 m:18 3 m:49 5 m:80	1 m:18 3 m:49 5 m:80		1 m:33 3 m:87 5 m:142	1 m:18 3 m:49 5 m:80	1 m:18 3 m:49 5 m:80				1 m:33 3 m:87 5 m:142			1 m:61 3 m:166 5 m:272

*1: Refer to Ending Page 1 for detailed switch specifications and dimensions.
*2: Switches other than the above models, such as switches with connectors, are also available. Refer to Ending Page 1.
*3: The max. load current is 20 mA at 25°C. The current is lower than 20 mA if the operating ambient temperature around the switch is higher than 25°C. (5 to 10 mA at 60°C)
*4: AC magnetic field proof switch (T2YD/T2YDT) cannot be used in DC magnetic fields.

Theoretical thrust table

(Unit: N)

Bore size (mm)	Operating direction	Working pressure MPa										
		0.1	0.15	0.2	0.3	0.4	0.5	0.6	0.7	0.8	0.9	1.0
ø32	Push	80.4	1.21×10^2	1.61×10^2	2.41×10^2	3.22×10^2	4.02×10^2	4.83×10^2	5.63×10^2	6.43×10^2	7.24×10^2	8.04×10^2
	Pull	60.3	90.5	1.21×10^2	1.81×10^2	2.41×10^2	3.02×10^2	3.62×10^2	4.22×10^2	4.83×10^2	5.43×10^2	6.03×10^2
ø50	Push	1.96×10^2	2.95×10^2	3.93×10^2	5.89×10^2	7.85×10^2	9.82×10^2	1.18×10^3	1.37×10^3	1.57×10^3	1.77×10^3	1.96×10^3
	Pull	1.65×10^2	2.47×10^2	3.30×10^2	4.95×10^2	6.60×10^2	8.25×10^2	9.90×10^2	1.15×10^3	1.32×10^3	1.48×10^3	1.65×10^3

Cylinder weight

Unit: kg

Item / Bore size (mm)	Stroke length								Switch weight
	25	50	75	100	125	150	175	200	
ø32	2.36	2.86	3.54	4.04	4.53	5.03	5.53	6.03	Refer to the weight in the switch specifications.
ø50	3.90	4.64	5.64	6.38	7.13	7.87	8.61	9.36	

LCM
LCR
LCG
LCW
LCX
STM
STG
STS/STL
STR2
UCA2
ULK*
JSK/M2
JSG
JSC3/JSC4
USSD
UFCD
USC
UB
JSB3
LMB
LML
HCM
HCA
LBC
CAC4
UCAC2
CAC-N
UCAC-N
RCS2
RCC2
PCC
SHC
MCP
GLC
MFC
BBS
RRC
GRC
RV3*
NHS
HRL
LN
Hand
Chuk
MecHnd/Chuk
ShkAbs
FJ
FK
SpdContr
Ending

How to order

Without switch (built-in magnet for switch)

STG - K - 50 ◯ ◯ - 25

With switch (built-in magnet for switch)

STG - K - 50 ◯ ◯ - 25 - T2H - R

Model No.

Ⓐ Variation

Ⓑ Bore size

Ⓒ Port thread

Ⓓ Cushion

Ⓔ Stroke length

■ Custom stroke length
Available in 5 mm increments. However, the total length is the same as that of the next longer standard stroke length.

Ⓕ Switch model No.
*1
*2

Ⓖ Switch quantity

Code	Description
Ⓐ Variation	
K	Heavy duty guide rod (metal bush bearing)
Ⓑ Bore size (mm)	
32	ø32
50	ø50
Ⓒ Port thread	
Blank	Rc thread
NN	NPT thread (made-to-order product)
GN	G thread (made-to-order product)
Ⓓ Cushion	
Blank	With rubber cushion
C	Rubber-air cushioned
Ⓔ Stroke length (mm)	
25, 50, 75, 100, 125, 150, 175, 200	

Ⓕ Switch model No.

Axial lead wire	Radial lead wire	Contact	Voltage AC	Voltage DC	Display	Lead wire
TOH*	**T0V***	Reed	●	●	1-color display	2-wire
T5H*	**T5V***		●	●	Without indicator lamp	
T8H*	**T8V***		●	●	1-color display	
T1H*	**T1V***	Proximity	●		1-color display	2-wire
T2H*	**T2V***			●		
T3H*	**T3V***			●		3-wire
T3PH*	**T3PV***			●	1-color display (PNP output)	
T2YH*	**T2YV***			●	2-color display	2-wire
T2WH*	**T2WV***			●		
T3YH*	**T3YV***			●		3-wire
T3WH*	**T3WV***			●		
T2JH*	**T2JV***			●	1-color display off-delay	2-wire
T2YD*	**-**			●	2-color display AC magnetic field	2-wire
T2YDT*	**-**			●		

* Lead wire length	
Blank	1 m (standard)
3	3 m (option)
5	5 m (option)

Ⓖ Switch quantity	
R	1 on rod side
H	1 on head side
D	2
T	3

⚠ Precautions for model No. selection

*1 : Switches other than Ⓕ Switch model No. are also available. (Made-to-order product) Refer to Ending Page 1 for details.
*2 : Switches are shipped with the product. Contact CKD if assembling before shipment is necessary.

[Example of model No.]

STG-K-50-50-T0H-D

Model: Guided cylinder
Double acting/heavy duty guide rod

Ⓐ Variation : Heavy duty guide rod (metal bush bearing)
Ⓑ Bore size : ø50 mm
Ⓒ Port thread : Rc thread
Ⓓ Cushion : With rubber cushion
Ⓔ Stroke length : 50 mm
Ⓕ Switch model No. : Reed T0H switch, lead wire 1m
Ⓖ Switch quantity : 2

How to order switch

SW - T0H

Switch model No.
(Item Ⓕ above)

Internal structure and parts list

● ø32, ø50

· 50 or less stroke length

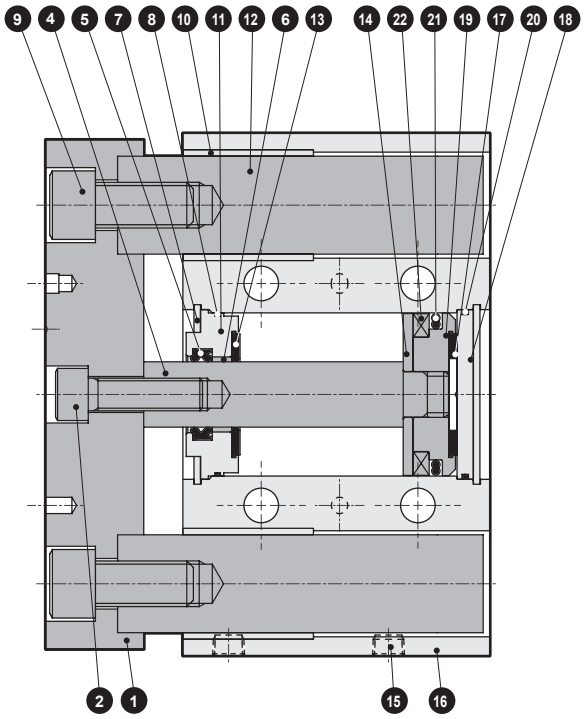

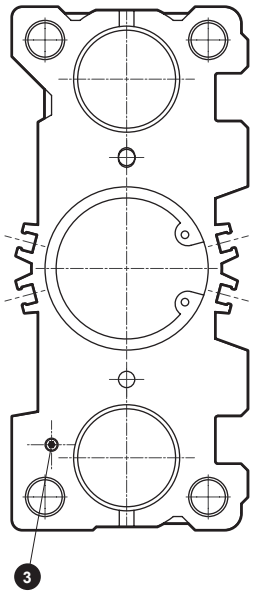

· Over 50 stroke length

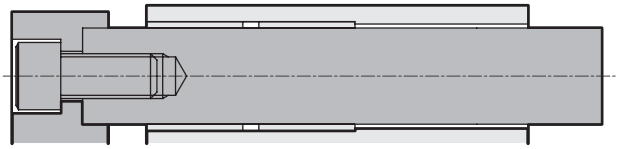

No.	Part name	Material	Remarks	No.	Part name	Material	Remarks
1	End plate	Steel	Nickeling	12	Guide rod	Steel	Industrial chrome plating
2	Hexagon socket head cap screw	Steel	Black finish	13	Cushion rubber	Urethane rubber	
3	Hexagon socket set screw	Stainless steel		14	Spacer	Aluminum alloy	
4	Piston rod	Steel	Industrial chrome plating	15	Plug	Steel	
5	Rod packing	Nitrile rubber		16	Cylinder body	Aluminum alloy	Hard alumite
6	Bush	Oiles drymet	ø50 only	17	Cushion rubber	Urethane rubber	
7	C type snap ring for hole	Steel	Zinc phosphate	18	Cover	Aluminum alloy	Chromate
8	O-ring	Nitrile rubber		19	Piston	Aluminum alloy	
9	Hexagon socket head cap screw	Steel	Black finish	20	O-ring	Nitrile rubber	
10	Metal	Oil-impregnated copper alloy bearing		21	Piston packing	Nitrile rubber	
11	Rod metal	Aluminum alloy	ø32: Hard alumite ø50: Chromate	22	Magnet		

Repair parts list

Bore size (mm)	Kit No.	Repair parts No.
ø32	STG-32K	5 8 13
ø50	STG-50K	17 20 21

Dimensions

● STG-K-ø32, ø50

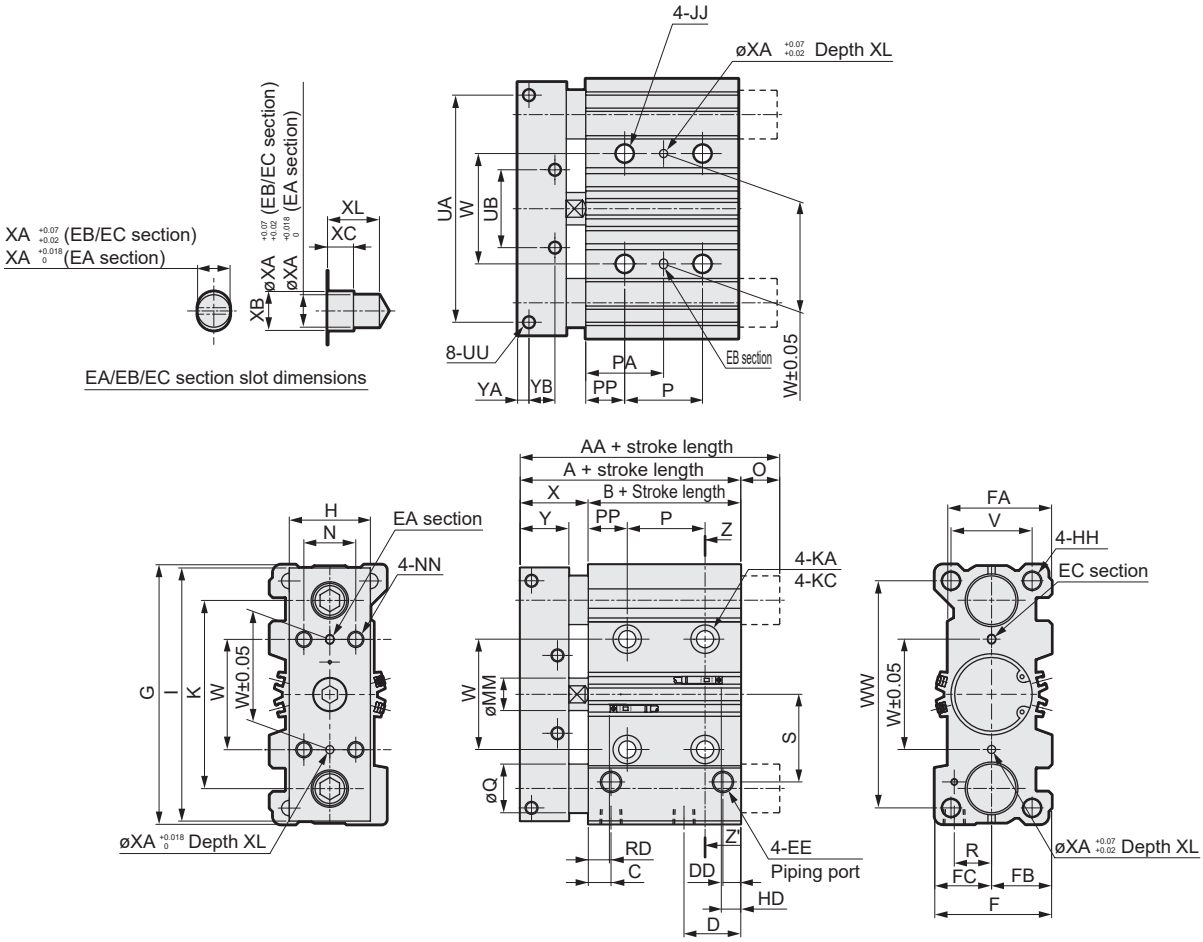

● T1H/V, T2YD, T2YDT

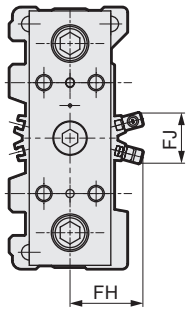

● T2YH/V, T3YH/V, T2JH/V, T8H/V

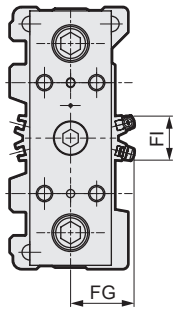

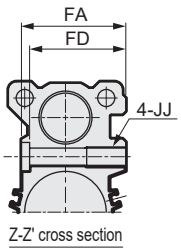

*1 : When using a custom stroke length, the total dimensions are the same as the longer standard stroke length.

Code / Bore size (mm)	A	AA 25, 50st	AA Over 50 st	B	C	D	DD	EE	F	FA	FB	FC	FD	G	H	HH
ø32	72	72	90.5	37.5	12.5	30.5	9	Rc1/8	54	47	27	27	42	130	44	M10 depth 18
ø50	86	86	109	44	14	35	11	Rc1/4	72	64	37	35	59	160	50	M12 depth 20

Code / Bore size (mm)	I	JJ	K	KA	KC	MM	N	NN	O 25, 50st	O Over 50 st	P 25st	P 50, 75, 100st	P Over 100 st	PA 25st	PA 50, 75, 100st
ø32	126	M10 depth 20	88	8.6 through	14 spot face depth 5	16	24	M8 depth 16	0	18.5	24	48	124	33	45
ø50	156	M12 depth 24	116	10.6 through	17.5 spot face depth 5	20	32	M10 depth 20	0	23	24	48	124	36	48

Code / Bore size (mm)	PA Over 100 st	PP	Q	R	S	UA	UB	UU	V	W	WW	X	XA	XB	XC	XL
ø32	83	21	25	18	39.5	112	27	M6 depth 10	37	44	113	34.5 $^{0}_{-2}$	4	4.5	3	6
ø50	86	24	30	23	54	140	48	M8 depth 14	50	68	140	42 $^{0}_{-2}$	5	6	4	8

Code / Bore size (mm)	Y	YA	YB	T0H/V, T2H/V, T3H/V, T5/V RD	T0H/V, T2H/V, T3H/V, T5/V HD	T1H/V, T2YH/V, T3YH/V, T2JH/V, T2YD RD	T1H/V, T2YH/V, T3YH/V, T2JH/V, T2YD HD	T2WH/V, T3WH/V RD	T2WH/V, T3WH/V HD	T8H/V RD	T8H/V HD	FG	FH	FI	FJ
ø32	25	6	13	10	8.5	9	7.5	12	10.5	4	2.5	30	36	22	26
ø50	30	7	16	13.5	11.5	12.5	10.5	15.5	13.5	7.5	5.5	39	45	27	31

MEMO

LCM
LCR
LCG
LCW
LCX
STM
STG
STS/STL
STR2
UCA2
ULK*
JSK/M2
JSG
JSC3/JSC4
USSD
UFCD
USC
UB
JSB3
LMB
LML
HCM
HCA
LBC
CAC4
UCAC2
CAC-N
UCAC-N
RCS2
RCC2
PCC
SHC
MCP
GLC
MFC
BBS
RRC
GRC
RV3*
NHS
HRL
LN
Hand
Chuk
MecHnd/Chuk
ShkAbs
FJ
FK
SpdContr
Ending

Selection guide

For vertical installation

● As for the total load weight, select so that the ratio of the load to the theoretical thrust is within the values in the table below.

Item / Bore size (mm)	Load factor for theoretical thrust
ø32	60% or less
ø50	

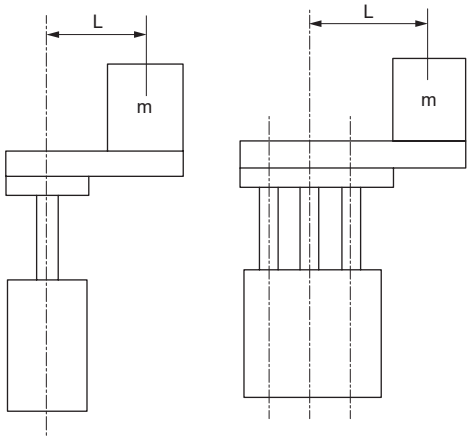

● 50 mm or less stroke length

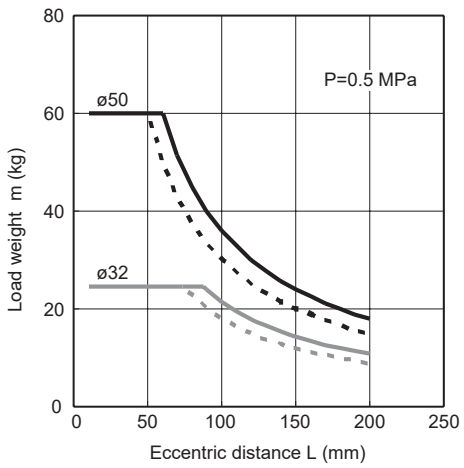

● Over 50 mm stroke length

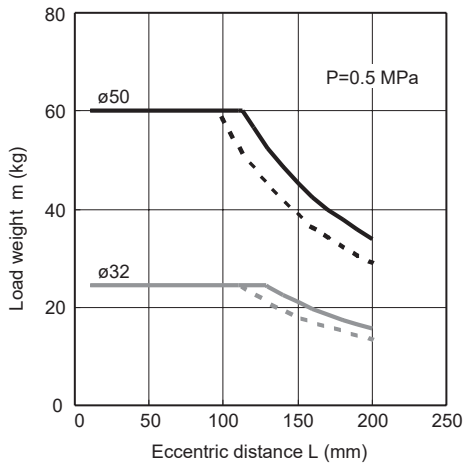

*1 : For operation at low speed, select the model within the dotted line as a guide.

Allowable lateral load

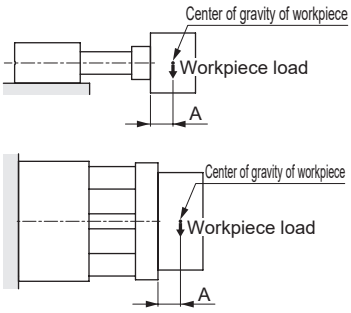

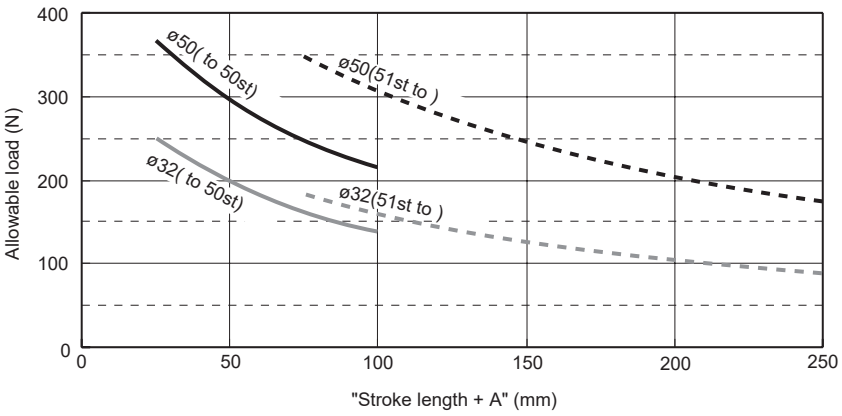

The allowable lateral load is a value for when the load is acting on the end surface of the end plate. When the center of gravity of the workpiece mounted on the end plate will be moved, substitute this distance for the stroke length before selection.

Allowable torque

Torque: T (N·m)

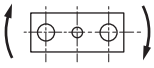

Unit: N·m

Item / Bore size (mm)	Stroke length (mm)							
	25	50	75	100	125	150	175	200
ø32	8.0	6.3	6.6	5.7	5.1	4.5	4.1	3.7
ø50	15	12	17	15	13	12	11	10

Non-rotating accuracy

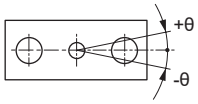

Item / Bore size (mm)	Non-rotating accuracy θ (degrees)
ø32	±0.05
ø50	

Selection guide

Specified range when using the product as a stopper

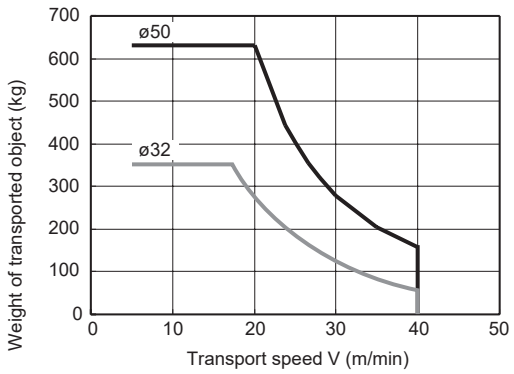

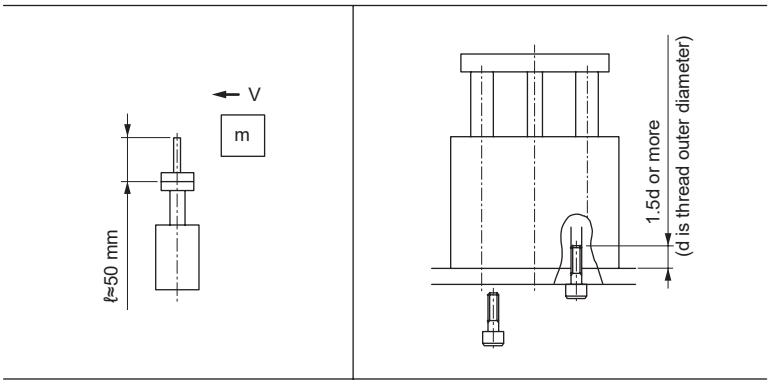

Safety precautions

*1 : When using the cylinder as a stopper, select a model with 50 mm stroke or less.
*2 : Make sure that the total length of the stopper section ℓ is 50 mm or less.
*3 : Make sure that the screw insertion depth of the bolt is 1.5d or more when fixing the cylinder body and consider countermeasures for preventing looseness (adhesive, spring washer, etc.).

Movable part weight table

Unit: kg

Item	Stroke length							
Bore size (mm)	25	50	75	100	125	150	175	200
ø32	1.62	1.85	2.24	2.47	2.71	2.94	3.17	3.40
ø50	2.71	3.05	3.66	4.00	4.34	4.68	5.01	5.35

Allowable absorbed energy calculation

Calculate the kinetic energy of the load that is actually to be used, and confirm whether it can be absorbed by the allowable absorbed energy of cylinder or not.

- To obtain the allowable absorbed energy of cylinder (E), use the value in the graph at right.
- Formula for calculating kinetic energy of load

$$E = \frac{1}{2} x(W1+W2)xV^2$$

W1: Applied load (kg) W2: Movable part weight of cylinder (kg)
V: Cylinder speed (m/s)

Allowable absorbed energy value

Use in the range below and to the left of the curve. For use in the upper right range, provide an external shock absorber.

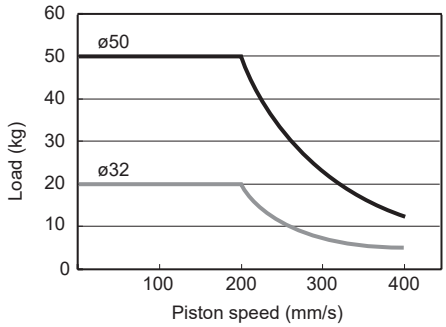

Deflection

For the runout amount σ that is produced at the end of the end plate when no load is applied, the value in the graph below is used as a guide.
(Excluding sag of guide rod)

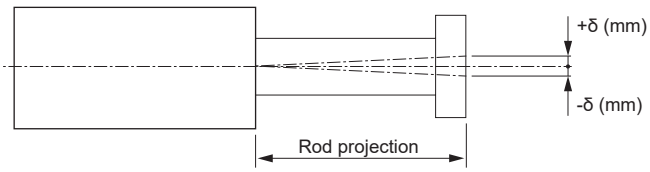

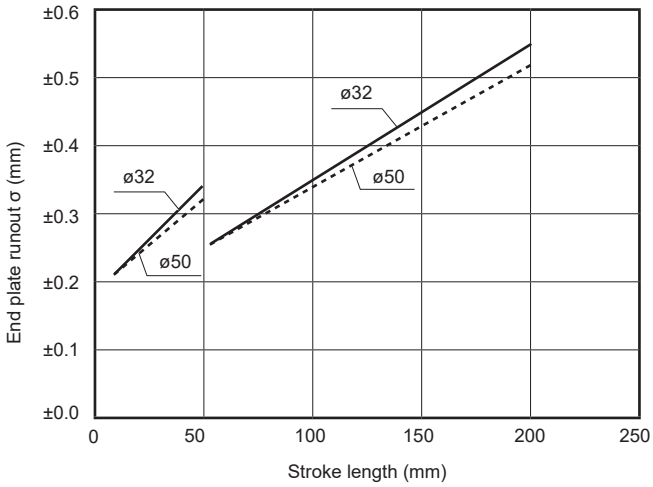

Pneumatic components

Safety Precautions

Be sure to read this section before use.
Refer to Intro Page 73 for general information of the cylinder, and to Intro Page 80 for general information of the cylinder switch.

Product-specific cautions: Guided cylinder, heavy duty guide rod STG-K Series

Mounting, installation and adjustment

1. Common

CAUTION

■ Be sure to attach a speed controller during piping before use. The available fittings are as below.

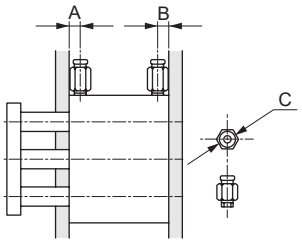

Item / Bore size (mm)	Port size	Port position A	Port position B	Applicable fittings	Fitting O.D. øC
ø32	Rc1/8	12.5	9	SC3W-6-4/6/8 GWS4-6 GWS6-6 GWS8-6 GWL4-6 GWL6-6	ø15 or less
ø50	Rc1/4	14	11	SC3W-8-6/8/10 GWS4-8 GWS6-8 GWS10-8 GWS12-8 GWL4 to 12-8	ø21 or less

■ Do not damage surface flatness by denting or scratching the tube main body mounting surface or the end plate surface in order to increase sliding resistance. Make sure that the flatness of the mating surface where the end plate will be attached is 0.03 mm or below. If it is difficult to ensure the above flatness, insert a shim (customer-provided) between the end plate and workpiece and adjust the clearance. This may prevent an increase in sliding resistance.

■ When mounting the body with the through bolt, tighten with tightening torque as shown in the table below.

ø32	12.5 to 22 N·m
ø50	24.5 to 44 N·m

■ Allowable absorbed energy value
Use this cushion within the range of the allowable absorbed energy. When the unit will be used where the allowable absorbed energy will be exceeded, provide a separate external shock absorber.
For details on the allowable absorbed energy value, refer to the specification field or selection guide.

■ The cylinder switch may malfunction if there is a magnetic substance such as a metal plate installed adjacently. Check that a distance of 10 mm or more is provided from the surface of the cylinders. (All bore sizes common)

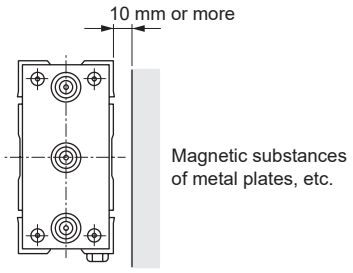

■ The cylinder switch may malfunction if cylinders are installed adjacently. Check that the following distances are provided between cylinders. (All bore sizes common)

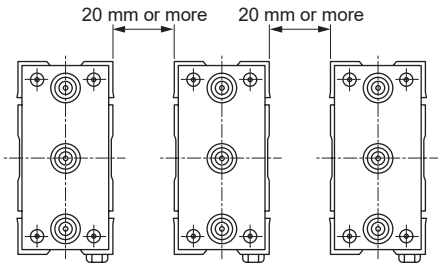

■ Do not rotate the piston rod, except when disassembling the product for maintenance, etc. Be sure not to rotate the piston rod, as misalignment may occur, destabilizing operation.

STS/STL

Guided cylinder

Combined functions

ø8/ø12/ø16/ø20/ø25
ø32/ø40/ø50/ø63/ø80/ø100

Overview

Highly precise, rigid and space saving cylinders enabled by attaching guide rods to both sides of the ultrashort compact square cylinder (SSD) with cylinder switch integrated in the body. These cylinders are suitable for use in lifting and pushing machines.

Features

Max. stroke 400 mm
STL long stroke supporting up to 200 mm stroke (ø8 to ø16) and 400 mm stroke (ø20 to ø80) Available for various applications.

Increases equipment accuracy when embedded
Two guide rods with metal bush bearing or ball bearing
High non-rotating accuracy and deflection, contributing to increased accuracy of the equipment into which it is integrated.

Sleek design
Inner groove on body. Storage and fixing of not only cylinder switch but also cable bands and terminal blocks, etc.
The body is space saving without protrusion.

Suitable for use with high load
Two guide rods. Cylinder with high rigidity and excellent lateral load capacity.

End plate material options
Aluminum (standard) or steel (option) end plate can be selected.

Enabling a compact system
Additional rotation-stop mechanism is not necessary thanks to the guide rods.
Helps make equipment for assembly more compact.

CONTENTS

Series variation	442
Variation and option combination selection table	444
● Double acting/single rod (ST$^{S}_{L}$-$^{M}_{B}$)	448
● Double acting/stroke adjustable (ST$^{S}_{L}$-$^{M}_{B}$P)	470
● Double acting/heat resistance (ST$^{S}_{L}$-$^{M}_{B}$T)	476
● Double acting/packing material fluoro rubber (ST$^{S}_{L}$-$^{M}_{B}$T2)	480
● Double acting/rubber-air cushioned (ST-$^{S}_{L}$-$^{M}_{B}$*C)	486
● Double acting/air cushioned (ST$^{S}_{L}$-$^{M}_{B}$C)	492
● Double acting/position locking (ST$^{S}_{L}$-$^{M}_{B}$Q)	500
● Double acting/fine speed (ST$^{S}_{L}$-$^{M}_{B}$F)	512
● Double acting/low speed (ST$^{S}_{L}$-$^{M}_{B}$O)	514
● Double acting/scraper (ST$^{S}_{L}$-$^{M}_{B}$G/G1)	518
● Double acting/coolant proof (ST$^{S}_{L}$-$^{M}_{B}$G2/G3)	526
● Double acting/anti-spatter adherence (ST$^{S}_{L}$-$^{M}_{B}$G4)	536
● Double acting/valve equipped (ST$^{S}_{L}$-$^{M}_{B}$V)	544
STS/STL Series switch common installation dimensions	552
Selection guide	554
Technical data	558
⚠ Safety precautions	570

The cylinder switches T2YH, T2YV, T3YH, and T3YV are scheduled for end of production at the end of December 2023.

LCM
LCR
LCG
LCW
LCX
STM
STG
STS/STL
STR2
UCA2
ULK*
JSK/M2
JSG
JSC3/JSC4
USSD
UFCD
USC
UB
JSB3
LMB
LML
HCM
HCA
LBC
CAC4
UCAC2
CAC-N
UCAC-N
RCS2
RCC2
PCC
SHC
MCP
GLC
MFC
BBS
RRC
GRC
RV3*
NHS
HRL
LN
Hand
Chuk
MecHnd/Chuk
ShkAbs
FJ
FK
SpdContr
Ending

Variation	Model No. JIS No.	Bore size (mm)	Standard stroke (mm)											
			STS											
			10	20	25	30	40	50	75	100	50	75	100	
Double acting/ single rod	ST S/L-M/B	ø8/ø12/ø16	●	●		●	●	●			●	●	●	
		ø20/ø25/ø32/ø40/ø50/ø63			●			●			●	●	●	
		ø80			●			●	●	●		●	●	
		ø100			●			●	●	●		●	●	
Double acting/stroke adjustable (push)	ST S/L-M/BP	ø8/ø12/ø16	●	●		●	●	●			●	●	●	
		ø20/ø25/ø32/ø40/ø50/ø63			●			●			●	●	●	
		ø80			●			●	●	●		●	●	
Double acting/heat resistance Note: For ø20/ø25, ball bearing B is not available	ST S/L-M/BT	ø12/ø16	●	●		●	●	●			●	●	●	
		ø20/ø25/ø32/ø40/ø50/ø63			●			●			●	●	●	
		ø80			●			●	●	●		●	●	
Double acting/packing material fluoro rubber	ST S/L-M/BT2	ø12/ø16	●	●		●	●	●			●	●	●	
		ø20/ø25/ø32/ø40/ø50/ø63			●			●			●	●	●	
		ø80			●			●	●	●		●	●	
Double acting/ rubber-air cushioned	ST S/L-M/B-*C	ø32/ø40/ø50			●			●			●	●	●	
		ø63												
		ø80			●			●	●	●		●	●	
Double acting/air cushioned	ST S/L-M/BC	ø25/ø32/ø40/ø50/ø63			●			●			●	●	●	
		ø80			●			●	●	●		●	●	
Double acting/ position locking	ST S/L-M/BQ	ø20/ø25/ø32			●			●			●	●	●	
		ø40/ø50/ø63			●			●			●	●	●	
		ø80			●			●	●	●		●	●	
Double acting/ fine speed	ST S/L-M/BF	ø8/ø12/ø16	●	●		●	●	●			●	●	●	
		ø20/ø25/ø32/ø50/ø63			●			●			●	●	●	
		ø80			●			●	●	●		●	●	
Double acting/ low speed	ST S/L-M/BO	ø8/ø12/ø16	●	●		●	●	●			●	●	●	
		ø20/ø25/ø32/ø40/ø50/ø63			●			●			●	●	●	
		ø80			●			●	●	●		●	●	
Double acting/rubber scraper coil scraper	ST S/L-M/BG ST S/L-M/BG1	ø20/ø25/ø32/ø40/ø50/ø63			●			●			●	●	●	
		ø80			●			●	●	●		●	●	
Double acting/ coolant proof	ST S/L-M/BG2 ST S/L-M/BG3	ø20/ø25/ø32/ø40/ø50/ø63			●			●			●	●	●	
		ø80			●			●	●	●		●	●	
Double acting/anti-spatter adherence	ST S/L-M/BG4	ø40/ø50/ø63			●			●			●	●	●	
		ø80			●			●	●	●		●	●	
Double acting/ valve equipped	ST S/L-M/BV	ø20/ø25/ø32/ø40/ø50/ø63			●			●			●	●	●	

LCM
LCR
LCG
LCW
LCX
STM
STG
STS/STL
STR2
UCA2
ULK*
JSK/M2
JSG
JSC3/JSC4
USSD
UFCD
USC
UB
JSB3
LMB
LML
HCM
HCA
LBC
CAC4
UCAC2
CAC-N
UCAC-N
RCS2
RCC2
PCC
SHC
MCP
GLC
MFC
BBS
RRC
GRC
RV3*
NHS
HRL
LN
Hand
Chuk
MecHnd/Chuk
ShkAbs
FJ
FK
SpdContr
Ending

●: Standard, ◎: Option, ○: Made to order, ▒: Not available

Stroke (mm)													Min. stroke (mm)	Custom stroke (per mm)	Max. stroke (mm)	Bearing		Option			Switch	Page
	STL															Metal bush bearing	Ball bearing	End plate material Steel	Corrosion proof end plate material Aluminum	Corrosion proof end plate material SUS		
	125	150	175	200	225	250	275	300	325	350	375	400				M	B	F	M	M1		
	●	●	●	●									5	5	200	●	●	◎	◎	◎	◎	448
	●	●	●	●	●	●	●	●	●	●	●	●			400	●	●	◎	◎	◎		
	●	●	●	●	●	●	●	●	●	●	●	●			400	●	●	◎	◎	◎		
	●	●	●	●											200	●	●	◎	◎	◎		
	●	●	●	●									10	-	200	●	●	◎			◎	470
	●	●	●	●	●	●	●	●	●	●	●	●			400	●	●	◎				
	●	●	●	●	●	●	●	●	●	●	●	●			400	●	●	◎				
	●	●	●	●									5	5	200	●	●	◎	○*1	○*1	▒	476
	●	●	●	●	●	●	●	●	●	●	●	●			400	●	●	◎	○*1	○*1		
	●	●	●	●	●	●	●	●	●	●	●	●			400	●	●	◎	○*1	○*1		
	●	●	●	●									5	5	200	●	●	◎	○	○	◎	480
	●	●	●	●	●	●	●	●	●	●	●	●			400	●	●	◎	○	○		
	●	●	●	●	●	●	●	●	●	●	●	●			400	●	●	◎	○	○		
	●	●	●	●	●	●	●	●	●	●	●	●	5	5	400	●	●	◎	○	○	◎	486
													10		400	●	●	◎	○	○		
	●	●	●	●	●	●	●	●	●	●	●	●	10		400	●	●	◎	○	○		
	●	●	●	●	●	●	●	●	●	●	●	●	15	-	400	●	●	◎	○	○	◎	492
	●	●	●	●	●	●	●	●	●	●	●	▒	*2		375	●	●	◎	○	○		
	●	●	●	●	●	●	●	●	●	●	●	●	5	5	400	●	●	◎	○	○	◎	500
	●	●	●	●	●	●	●	●	●	●	●	▒			375	●	●	◎	○	○		
	●	●	●	●	●	●	●	●	●	●	▒	▒			350	●	●	◎	○	○		
	●	●	●	●	▒	▒	▒	▒	▒	▒	▒	▒	5	5	200	●	●	◎	○	○	◎	512
	●	●	●	●	▒	▒	▒	▒	▒	▒	▒	▒			200	●	●	◎	○	○		
	●	●	●	●	▒	▒	▒	▒	▒	▒	▒	▒			200	●	●	◎	○	○		
	●	●	▒	▒	▒	▒	▒	▒	▒	▒	▒	▒	5	5	150	●	●	◎	○	○	◎	514
	●	●	●	●	●	●	●	●	▒	▒	▒	▒			300	●	●	◎	○	○		
	●	●	●	●	●	●	●	●	▒	▒	▒	▒			300	●	●	◎	○	○		
	●	●	●	●	●	●	●	●	●	●	●	●	5	5	400	●	●	◎	○	○	◎	518
	●	●	●	●	●	●	●	●	●	●	●	●			400	●	●	◎	○	○		
	●	●	●	●	●	●	●	●	●	●	●	●	5	5	400	●	●	▒	▒	○	◎	526
	●	●	●	●	●	●	●	●	●	●	●	●			400	●	●	▒	▒	○		
	●	●	●	●	●	●	●	●	●	●	●	●	5	5	400	●	●	◎	○	○	◎	536
	●	●	●	●	●	●	●	●	●	●	●	●			400	●	●	◎	○	○		
	▒	▒	▒	▒	▒	▒	▒	▒	▒	▒	▒	▒	5	5	100	●	●	◎	▒	▒	◎	544

*1: Ball bearing (B) only.
*2: For min. stroke and below, select the basic since there is no cushion effect.

Variation and option selection table (metal bush bearing)

●: Standard
◎: Option
○: Available (made-to-order product)
△: Available depending on conditions (Contact CKD.)
×: Not available

Category		Code	M	P	Q	V	C	T	T2	O	G	G1	G2	G3	G4	F	L1	N	G	C	M	M1	F	P6	P72	P73
			Variation															Port thread		Cushion	Option					
			Double acting basic (metal bush)	Stroke adjustable (push)	Position locking	With solenoid valve	With air cushion	Heat resistance (120°C)	Packing material fluoro rubber	Low speed	Rubber scraper	Coil scraper	Coolant proof scraper (NBR)	Coolant proof scraper (FKM)	Anti-spatter adherence	Fine speed	Strong magnetic field proof/2-color LED switch	NPT ø32 or more	G ø32 or more	Rubber-air cushioned	Corrosion proof (aluminum end plate)	Corrosion proof (SUS end plate)	Steel plate specified	Copper and PTFE free	Clean-room specifications (exhaust port)	Clean-room specifications (vacuum treatment)
Variation	Double acting basic (metal bush)	M		●	●	●	●	●	●	●	●	●	●	●	●	●	◎	○	○	●	◎	◎	◎	◎	×	×
Variation	Stroke adjustable (push)	P			*2	○	○	×	○	○	*7	*7	×	×	*7	△	◎	○	○	○	△	△	◎	△	×	×
Variation	Position locking	Q				×	×	×	×	×	△	△	△	△	△	×	◎	○	○	×	○	○	◎	○	×	×
Variation	With solenoid valve	V					×	×	×	○	×	×	×	×	×	×	◎	○	○	○	△	△	◎	×	×	×
Variation	With air cushion	C						*1	*1	○	○	○	○	○	○	×	◎	○	○	×	○	○	◎	○	×	×
Variation	Heat resistance (120°)	T							×	×	×	○	×	×	×	×	×	○	○	×	×	×	◎	×	×	×
Variation	Packing material fluoro rubber	T2								×	×	○	×	*3	×	×	◎	○	○	×	○	○	◎	×	×	×
Variation	Low speed	O									×	×	×	×	×	×	◎	○	○	○	○	○	◎	×	×	×
Variation	Rubber scraper	G										×	×	×	×	×	◎	○	○	○	○	○	◎	○	×	×
Variation	Coil scraper	G1											×	×	*4	×	◎	○	○	○	○	○	◎	×	×	×
Variation	Coolant proof scraper (NBR)	G2												×	×	×	*6	○	○	○	*3	○	×	×	×	×
Variation	Coolant proof scraper (FKM)	G3													×	×	*6	○	○	×	*3	○	×	×	×	×
Variation	Anti-spatter adherence	G4														×	◎	○	○	○	○	○	◎	×	×	×
Variation	Fine speed	F															◎	○	○	○	○	○	◎	×	×	×
Variation	Strong magnetic field proof/2-color LED switch	L1																○	○	◎	◎	◎	◎	◎	×	×
Port thread	NPT ø32 or more	N																	×	○	○	○	○	○	×	×
Port thread	G ø32 or more	G																		○	○	○	○	○	×	×
Cushion	Rubber-air cushioned	C																			○	○	○	○	×	×
Option	Corrosion proof (aluminum end plate)	M																				×	×	×	×	×
Option	Corrosion proof (SUS end plate)	M1																					×	×	×	×
Option	Steel plate specified	F																						◎	×	×
Option	Copper and PTFE free	P6																							×	×
Option	Clean-room specifications (exhaust port)	P72																								×
Option	Clean-room specifications (vacuum treatment)	P73																								
Accy.	Cylinder switch	Separate list	◎	◎	◎	◎	◎	×	◎	◎	◎	◎	◎	◎	◎	◎	◎	◎	◎	◎	◎	◎	◎	◎	×	×

Caution

*1: Available for ø50 to 100 only.
*2: Available for the head side position locking only.
*3: For the combination of G3 and T2, select G3 for fluoro rubber cylinder interior packing. (T2 code is not required.)
Similarly, G2 and G3 include the specifications of M (corrosion proof). (M code is not required.)
*4: G4 includes metal scraper.
*5: For P72 and P73 clean room specifications, refer to “Components for clean room specifications” (catalog No. CB-033SA).
*6: L1 specifications. (L1 code is not required.)
7: Shock absorber is provided as standard. G is not supported.

LCM
LCR
LCG
LCW
LCX
STM
STG
STS/STL
STR2
UCA2
ULK*
JSK/M2
JSG
JSC3/JSC4
USSD
UFCD
USC
UB
JSB3
LMB
LML
HCM
HCA
LBC
CAC4
UCAC2
CAC-N
UCAC-N
RCS2
RCC2
PCC
SHC
MCP
GLC
MFC
BBS
RRC
GRC
RV3*
NHS
HRL
LN
Hand
Chuk
MecHnd/Chuk
ShkAbs
FJ
FK
SpdContr
Ending

[Example of model No.]

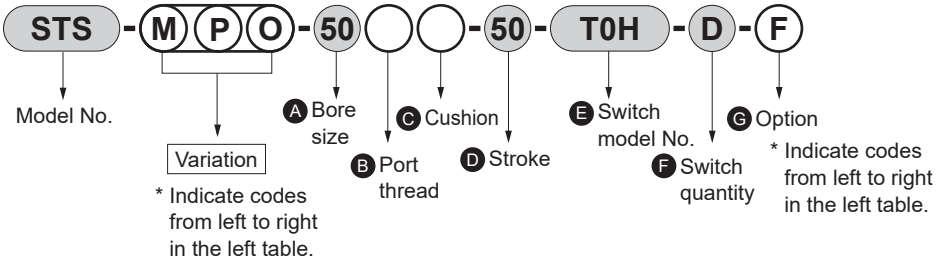

Note: For strong magnetic field proof and 2-color LED switches for ø40 and over, insert “L1” with “-” between the variation model No. and bore size.
(Example) STS-MPO-**L1**-50-50-T2YH3-D-F

For ø80 and ø100, the 2-color LED and strong magnetic field proof switches cannot be retrofitted on a previously purchased standard product. In this case, order the model No. with “L1” inserted between A and B.
(Example) STS-B-**L1**-80-50-F

Model No.	: Guided cylinder, short stroke
● Variations	: Metal bush bearing, stroke adjustable, low speed
A Bore size	: ø50 mm
B Port thread	: Rc thread
C Cushion	: With rubber cushion
D Stroke	: 50 mm
E Switch model No.	: Reed T0H switch, lead wire 1 m
F Switch quantity	: 2
G Option	: End plate material: steel

Variation and option combination selection table (ball bearing)

●: Standard
◎: Option
○: Available (made-to-order product)
△: Available depending on conditions (Contact CKD.)
×: Not available

Category		Code	B	P	Q	V	C	T	T2	O	G	G1	G2	G3	G4	F	L1	N	G	C	M	M1	F	P6	P72	P73
			Variation															Port thread		Cushion	Option					
			Double acting basic (bearing bush type)	Stroke adjustable (push)	Position locking	With solenoid valve	With air cushion	Heat resistance (120°C) *2	Packing material fluoro rubber	Low speed	Rubber scraper	Coil scraper	Coolant proof scraper (NBR)	Coolant proof scraper (FKM)	Anti-spatter adherence	Fine speed	Strong magnetic field proof/2-color LED switch	NPT ø32 or more	G ø32 or more	Rubber-air cushioned	Corrosion proof (aluminum end plate)	Corrosion proof (SUS end plate)	Steel plate specified	Copper and PTFE free	Clean-room specifications (exhaust port)	Clean-room specifications (vacuum treatment)
Variation	Double acting basic (bearing bush type)	B		●	●	●	●	●	●	●	●	●	●	●	●	●	◎	○	○	●	◎	◎	◎	◎	◎	◎
	Stroke adjustable (push)	P			*3	○	○	×	○	○	*8	*8	×	×	*8	△	◎	○	○	○	△	△	◎	△	×	×
	With position locking	Q				×	×	×	×	×	△	△	△	△	△	×	◎	○	○	×	○	○	◎	○	△	△
	With solenoid valve	V					×	×	×	○	×	×	×	×	×	×	◎	○	○	○	△	△	◎	×	×	×
	With air cushion	C						*1	*1	○	○	○	○	○	○	×	◎	○	○	×	○	○	◎	○	×	×
	Heat resistance (120°) *2	T							×	×	×	○	×	×	×	×	×	○	○	×	○	○	◎	×	×	×
	Packing material fluoro rubber	T2								×	×	○	×	*4	×	×	◎	○	○	×	○	○	◎	×	○	○
	Low speed	O									×	×	×	×	×	×	◎	○	○	○	○	○	◎	×	○	○
	Rubber scraper	G										×	×	×	×	×	◎	○	○	○	○	○	◎	○	×	×
	Coil scraper	G1											×	×	*5	×	◎	○	○	○	○	○	◎	×	×	×
	Coolant proof scraper (NBR)	G2												×	×	×	*7	○	○	○	*4	○	×	○	×	×
	Coolant proof scraper (FKM)	G3													×	×	*7	○	○	×	*4	○	×	○	×	×
	Anti-spatter adherence	G4														×	◎	○	○	○	○	○	◎	×	×	×
	Fine speed	F															◎	○	○	○	○	○	◎	×	○	○
	Strong magnetic field proof/2-color LED switch	L1																○	○	◎	◎	◎	◎	◎	◎	◎
Port thread	NPT ø32 or more	N																	×	○	○	○	○	○	○	○
	G ø32 or more	G																		○	○	○	○	○	○	○
Cushion	Rubber-air cushioned	C																			○	○	○	○	○	○
Option	Corrosion proof (aluminum end plate)	M																				×	×	○	*4	*4
	Corrosion proof (SUS end plate)	M1																					×	○	○	○
	Steel plate specified	F																						◎	×	×
	Copper and PTFE free	P6																							×	×
	Clean-room specifications (exhaust port)	P72																								×
	Clean-room specifications (vacuum treatment)	P73																								
Accy.	Cylinder switch	Separate list	◎	◎	◎	◎	◎	×	◎	◎	◎	◎	◎	◎	◎	◎	◎	◎	◎	◎	◎	◎	◎	◎	◎	◎

Caution

*1: Available for ø50 to 100 only.
*2: Available for the head side position locking only.
*3: For the combination of G3 and T2, select G3 for fluoro rubber cylinder interior packing. (T2 code is not required.)
Similarly, P72, P73, G2 and G3 include the specifications of M (corrosion proof).
(M code is not required.)
*4: G4 includes metal scraper.
*5: For P72 and P73 clean room specifications, refer to “Components for clean room specifications” (catalog No. CB-033SA).
*6: L1 specifications. (L1 code is not required.)
7: Shock absorber is provided as standard. G is not supported.

LCM
LCR
LCG
LCW
LCX
STM
STG
STS/STL
STR2
UCA2
ULK*
JSK/M2
JSG
JSC3/JSC4
USSD
UFCD
USC
UB
JSB3
LMB
LML
HCM
HCA
LBC
CAC4
UCAC2
CAC-N
UCAC-N
RCS2
RCC2
PCC
SHC
MCP
GLC
MFC
BBS
RRC
GRC
RV3*
NHS
HRL
LN
Hand
Chuk
MecHnd/Chuk
ShkAbs
FJ
FK
SpdContr
Ending

[Example of model No.]

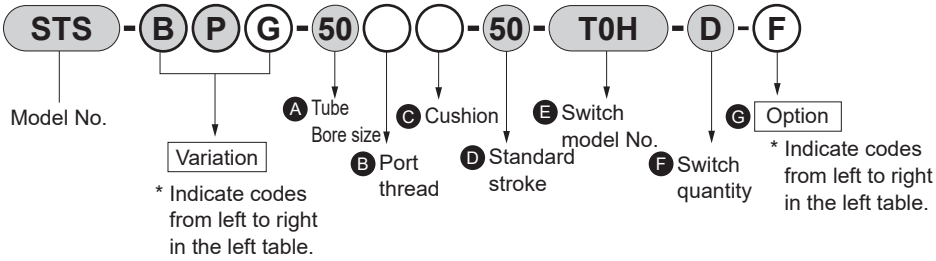

Note: For strong magnetic field proof and 2-color LED switches for ø40 and over, insert “L1” with “-” between the variation model No. and bore size.
(Example) STS-B-**L1**-63-50-T2YH3-D-F

For ø80 and ø100, the 2-color LED and strong magnetic field proof switches cannot be retrofitted on a previously purchased standard product.
In this case, order the model No. with “L1” inserted between Ⓐ and Ⓑ.
(Example) STS-B-**L1**-80-50-F

Model No.	: Guided cylinder/short stroke
● Variation	: Ball bearing, stroke adjustable, rubber scraper
Ⓐ Bore size	: ø50 mm
Ⓑ Port thread	: Rc thread
Ⓒ Cushion	: With rubber cushion
Ⓓ Stroke	: 50 mm
Ⓔ Switch model No.	: Reed T0H switch, lead wire 1 m
Ⓕ Switch quantity	: 2
Ⓖ Option	: End plate material: steel

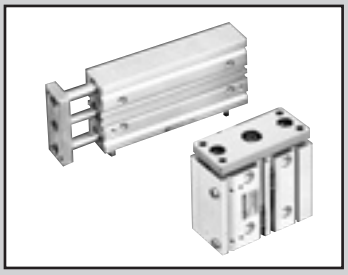

Guided cylinder, double acting/single rod

STS/STL-M/B Series

● Bore size: ø8/ø12/ø16/ø20/ø25/ø32
ø40/ø50/ø63/ø80/ø100

JIS symbol

RoHS CAD

Specifications

Item	STS-M/B STL-M/B										
Bore size mm	ø8	ø12	ø16	ø20	ø25	ø32	ø40	ø50	ø63	ø80	ø100
Actuation	Double acting										
Working fluid	Compressed air										
Max. working pressure MPa	1.0 (≈150 psi, 10 bar)										
Min. working pressure MPa	0.15 (≈22 psi, 1.5 bar)					0.1 (≈15 psi, 1 bar)					
Proof pressure MPa	1.6 (≈230 psi, 16 bar)										
Ambient temperature °C	-10 (14°F) to 60 (140°F) (no freezing)										
Port size	M5					Rc1/8		Rc1/4		Rc3/8	
Stroke tolerance mm	+2.0 0										
Working piston speed mm/s	50 to 500								50 to 300		
Cushion	With rubber cushion										
Lubrication	Not required (use turbine oil class 1 ISO VG32 if necessary for lubrication)										
Allowable absorbed energy J	0.029	0.056	0.088	0.157	0.157	0.401	0.627	0.980	1.560	2.510	3.92

Stroke

● Short stroke STS

Bore size	Standard stroke (mm)	Max. stroke (mm)	Min. stroke (mm)	Min. stroke (mm)(switch)
ø8	10,20,30 40,50	50	5	5 With one or two switches
ø12				
ø16				
ø20	25,50			
ø25				
ø32				
ø40				
ø50				
ø63				
ø80	25,50,75,100	100		
ø100				

● Long stroke STL

Bore size	Standard stroke (mm)	Max. stroke (mm)	Min. stroke (mm)	Min. stroke (mm)(switch)
ø8	50,75,100 125,150 175,200	200	50	50 With one or two switches.
ø12				
ø16				
ø20	50,75,100 125,150,175 200,225,250 275,300,325 350,375,400	400	30	30 With one or two switches
ø25				
ø32				
ø40				
ø50				
ø63				
ø80	75,100,125,150,175 200,225,250,275,300 325,350,375,400		55	55 With one or two switches.
ø100	75,100,125,150,175,200	200		

Note : The custom stroke is available in 5 mm increments.
However, the total length is the same as that of the next longer standard stroke.

Clean-room specifications (Catalog No. CB-033SA)

● Anti-dust generation structure for use in cleanrooms

STS/L-···· P7*

STS/L-···· P5*

Switch specifications

● 1-color/2-color LED/for AC magnetic field proof

Item	Proximity 2-wire	Proximity 2-wire			Proximity 3-wire				Reed 2-wire							Proximity 2-wire
	T1H/ T1V	T2H/T2V/ T2JH/T2JV	T2YH/ T2YV	T2WH/ T2WV	T3H/ T3V	T3PH/ T3PV	T3YH/ T3YV	T3WH/ T3WV	T0H/T0V		T5H/T5V		T8H/T8V			T2YD(*4) T2YDT
Applications	For programmable controller, relay, compact solenoid valve	Dedicated for programmable controller			For programmable controller, relay				For programmable controller, relay		For programmable controller, relay, IC circuit (no indicator lamp), serial connection		For programmable controller, relay			For programmable controller
Output method	-				NPN output	PNP output	NPN output	NPN output	-							
Power supply voltage	-				10 to 28 VDC				-							
Load voltage	85 to 265 VAC	10 to 30 VDC		24 VDC ±10%	30 VDC or less				12/24 VDC	100/110 VAC	5/12/24 VDC	100/110 VAC	12/24 VDC	110 VAC	220 VAC	24 VDC ±10%
Load current	5 to 100mA	5 to 20 mA (*3)			100 mA or less		50 mA or less		5 to 50mA	7 to 20mA	50 mA or less	20 mA or less	5 to 50mA	7 to 20mA	7 to 10mA	5 to 20mA
Indicator lamp	LED (Lit when ON)	LED (Lit when ON)	Red/green LED (Lit when ON)	Red/green LED (Lit when ON)	LED (Lit when ON)	Yellow LED (Lit when ON)	Red/green LED (Lit when ON)	Red/green LED (Lit when ON)	LED (Lit when ON)		No indicator lamp		LED (Lit when ON)			Red/green LED (Lit when ON)
Leakage current	1 mA or less with 100 VAC, 2 mA or less with 200 VAC	1 mA or less			10 μA or less				0mA							1 mA or less
Weight g	1 m: 33 3 m: 87 5 m: 142	1 m: 18 3 m: 49 5 m: 80	1 m: 33 3 m: 87 5 m: 142	1 m: 18 3 m: 49 5 m: 80	1 m: 18 3 m: 49 5 m: 80		1 m: 33 3 m: 87 5 m: 142	1 m: 18 3 m: 49 5 m: 80	1 m: 18 3 m: 49 5 m: 80				1 m: 33 3 m: 87 5 m: 142			1 m: 61 3 m: 166 5 m: 272

*1: Refer to Ending Page 1 for detailed switch specifications and dimensions.
*2: Switches other than the above models, such as switches with connectors, are also available. Refer to Ending Page 1.
*3: The max. load current is 20 mA at 25°C. The current is lower than 20 mA if the operating ambient temperature around the switch is higher than 25˚C. (5 to 10 mA at 60°C)
*4: AC magnetic field proof switch (T2YD/T2YDT) cannot be used in DC magnetic fields.

Theoretical thrust table

(Unit: N)

Bore size (mm)	Operating direction	Working pressure MPa										
		0.1	0.15	0.2	0.3	0.4	0.5	0.6	0.7	0.8	0.9	1.0
ø8	Push	-	7.54	10.1	15.1	20.1	25.1	30.2	35.2	40.2	45.2	50.3
	Pull	-	5.65	7.54	11.3	15.1	18.8	22.6	26.4	30.2	33.9	37.7
ø12	Push	-	17.0	22.6	33.9	45.2	56.5	67.9	79.2	90.5	1.02×10^2	1.13×10^2
	Pull	-	12.7	17.0	25.4	33.9	42.4	50.9	59.4	67.9	76.3	84.8
ø16	Push	-	30.2	40.2	60.3	80.4	1.01×10^2	1.21×10^2	1.41×10^2	1.61×10^2	1.81×10^2	2.01×10^2
	Pull	-	22.6	30.2	45.2	60.3	75.4	90.5	1.06×10^2	1.21×10^2	1.36×10^2	1.51×10^2
ø20	Push	-	47.1	62.8	94.2	1.26×10^2	1.57×10^2	1.88×10^2	2.20×10^2	2.51×10^2	2.83×10^2	3.14×10^2
	Pull	-	35.3	47.1	70.7	94.2	1.18×10^2	1.41×10^2	1.65×10^2	1.88×10^2	2.12×10^2	2.36×10^2
ø25	Push	-	73.6	98.2	1.47×10^2	1.96×10^2	2.45×10^2	2.95×10^2	3.44×10^2	3.93×10^2	4.42×10^2	4.91×10^2
	Pull	-	56.7	75.6	1.13×10^2	1.51×10^2	1.89×10^2	2.27×10^2	2.64×10^2	3.02×10^2	3.40×10^2	3.78×10^2
ø32	Push	80.4	1.21×10^2	1.61×10^2	2.41×10^2	3.22×10^2	4.02×10^2	4.83×10^2	5.63×10^2	6.43×10^2	7.24×10^2	8.04×10^2
	Pull	60.3	90.5	1.21×10^2	1.81×10^2	2.41×10^2	3.02×10^2	3.62×10^2	4.22×10^2	4.83×10^2	5.43×10^2	6.03×10^2
ø40	Push	1.26×10^2	1.88×10^2	2.51×10^2	3.77×10^2	5.03×10^2	6.28×10^2	7.54×10^2	8.80×10^2	1.01×10^3	1.13×10^3	1.26×10^3
	Pull	1.06×10^2	1.58×10^2	2.11×10^2	3.17×10^2	4.22×10^2	5.28×10^2	6.33×10^2	7.39×10^2	8.44×10^2	9.50×10^2	1.06×10^3
ø50	Push	1.96×10^2	2.95×10^2	3.93×10^2	5.89×10^2	7.85×10^2	9.82×10^2	1.18×10^3	1.37×10^3	1.57×10^3	1.77×10^3	1.96×10^3
	Pull	1.65×10^2	2.47×10^2	3.30×10^2	4.95×10^2	6.60×10^2	8.25×10^2	9.90×10^2	1.15×10^3	1.32×10^3	1.48×10^3	1.65×10^3
ø63	Push	3.12×10^2	4.68×10^2	6.23×10^2	9.35×10^2	1.25×10^3	1.56×10^3	1.87×10^3	2.18×10^3	2.49×10^3	2.81×10^3	3.12×10^3
	Pull	2.80×10^2	4.20×10^2	5.61×10^2	8.41×10^2	1.12×10^3	1.40×10^3	1.68×10^3	1.96×10^3	2.24×10^3	2.52×10^3	2.80×10^3
ø80	Push	5.03×10^2	7.54×10^2	1.01×10^3	1.51×10^3	2.01×10^3	2.51×10^3	3.02×10^3	3.52×10^3	4.02×10^3	4.52×10^3	5.03×10^3
	Pull	4.54×10^2	6.80×10^2	9.07×10^2	1.36×10^3	1.81×10^3	2.27×10^3	2.72×10^3	3.17×10^3	3.63×10^3	4.08×10^3	4.54×10^3
ø100	Push	7.85×10^2	1.18×10^3	1.57×10^3	2.36×10^3	3.14×10^3	3.93×10^3	4.71×10^3	5.50×10^3	6.28×10^3	7.07×10^3	7.85×10^3
	Pull	7.15×10^2	1.07×10^3	1.43×10^3	2.14×10^3	2.86×10^3	3.57×10^3	4.29×10^3	5.00×10^3	5.72×10^3	6.43×10^3	7.15×10^3

For cylinder weight, refer to pages 558 to 561.

LCM
LCR
LCG
LCW
LCX
STM
STG
STS/STL
STR2
UCA2
ULK*
JSK/M2
JSG
JSC3/JSC4
USSD
UFCD
USC
UB
JSB3
LMB
LML
HCM
HCA
LBC
CAC4
UCAC2
CAC-N
UCAC-N
RCS2
RCC2
PCC
SHC
MCP
GLC
MFC
BBS
RRC
GRC
RV3*
NHS
HRL
LN
Hand
Chuk
MecHnd/Chuk
ShkAbs
FJ
FK
SpdContr
Ending

How to order

● Short stroke

Without switch (built-in magnet for switch)

STS - M - 8 ◯ - 10 ———— F

With switch (built-in magnet for switch)

STS - M - 8 ◯ - 10 - T2H - R - F

● Long stroke

Without switch (built-in magnet for switch)

STL - M - 8 ◯ - 50 ———— F

With switch (built-in magnet for switch)

STL - M - 8 ◯ - 50 - T2H - R - F

Model No.

Ⓐ Bearing

Ⓑ Bore size

Ⓒ Port thread

Ⓓ Stroke

■ Custom stroke
Available in 5 mm increments. However, the total length is the same as that of the next longer standard stroke.

Ⓔ Switch model No.
*1 *3 *5

For the 2-color LED, T1H/V, T8H/V and strong magnetic field proof switches for ø40 and over, insert "L1" with "-" between Ⓐ and Ⓑ.
Example) STS-M-L1-63-50-T2YH3-D-F
For ø80 and ø100, the 2-color LED, T1H/V, T8H/V and AC magnetic field proof switches cannot be retrofitted on a previously purchased standard product.
In this case, order the model No. with "L1" inserted between Ⓐ and Ⓑ.
(Example) STS-M-L1-80-50-F

Ⓕ Switch quantity

Ⓖ Option

Code	Description
Ⓐ Bearing	
M	Metal bush bearing
B	Ball bearing
Ⓑ Bore size (mm)	
8	ø8
12	ø12
16	ø16
20	ø20
25	ø25
32	ø32
40	ø40
50	ø50
63	ø63
80	ø80
100	ø100 (made to order)
Ⓒ Port thread	
Blank	M5 (ø8 to ø25)
	Rc thread (ø32 to ø100)
NN	NPT thread (ø32 and over) made-to-order product
GN	G thread (ø32 and over) made-to-order product
Ⓓ Stroke (mm)	
Refer to the stroke table on the following page.	

Ⓔ Switch model No.

Straight lead wire	L-shaped lead wire	Contact	Voltage AC	Voltage DC	Indicator	Lead wire
T0H*	T0V*	Reed	●	●	1-color LED	2-wire
T5H*	T5V*	Reed	●	●	No indicator lamp	2-wire
T8H*	T8V*	Reed	●	●	1-color LED	2-wire
T1H*	T1V*	Proximity	●		1-color LED	2-wire
T2H*	T2V*	Proximity		●	1-color LED	2-wire
T3H*	T3V*	Proximity		●	1-color LED	3-wire
T3PH*	T3PV*	Proximity		●	1-color LED	3-wire
T2WH*	T2WV*	Proximity		●	2-color LED	2-wire
T2YH*	T2YV*	Proximity		●	2-color LED	2-wire
T3WH*	T3WV*	Proximity		●	2-color LED	3-wire
T3YH*	T3YV*	Proximity		●	2-color LED	3-wire
T2JH*	T2JV*	Proximity		●	1-color LED off-delay	2-wire
T2YD*	-	Proximity		●	2-color LED AC magnetic field	2-wire
T2YDT*	-	Proximity		●	2-color LED AC magnetic field	2-wire

* Lead wire length	
Blank	1 m (standard)
3	3 m (option)
5	5 m (option)
Ⓕ Switch quantity	
R	1 on rod side
H	1 on head side
D	2
T	3
Ⓖ Option	
F	End plate material: steel
M	Corrosion proof (Piston rod and guide rod material: SUS) *4
M1	Corrosion proof (Piston rod, guide rod and end plate material: SUS) *4
P6	Copper and PTFE free specifications *5

⚠ Precautions for model No. selection

*1 : Switches other than Ⓔ Switch model No. are also available. (Made-to-order product) Refer to Ending Page 1 for details.
*2 : Refer to page 444 (metal bush bearing M) and page 446 (ball bearing B) for combinations of variations/options.
*3 : T8H/V switch cannot be installed on ø8 to ø16.
*4 : Refer to page 458 for material details.
*5 : ø8 to ø25 with ball bearing B are copper and PTFE free as standard.
*6 : Switches are shipped with the product. Contact CKD if assembling before shipment is necessary.

[Example of model No.]

STS-M-8-30-T0H-R-F

Model: Guided cylinder, short stroke, standard single rod

Ⓐ Bearing : Metal bush bearing
Ⓑ Bore size : ø8 mm
Ⓒ Port thread : M5
Ⓓ Stroke : 30 mm
Ⓔ Switch model No. : Reed switch T0H, 1 m lead wire length
Ⓕ Switch quantity : 1 on rod side
Ⓖ Option : End plate material: steel

Ⓓ Stroke

Series	Stroke (mm)		Applicable bore size										
			ø8	ø12	ø16	ø20	ø25	ø32	ø40	ø50	ø63	ø80	ø100
STS	Standard stroke	10	●	●	●								
		20	●	●	●								
		25				●	●	●	●	●	●	●	●
		30	●	●	●								
		40	●	●	●								
		50	●	●	●	●	●	●	●	●	●	●	●
		75										●	●
		100										●	●
	Min. stroke	*1	5										
	Custom stroke	*1, 2	In 5 mm increments										
STL	Standard stroke	50	●	●	●	●	●	●	●	●	●		
		75	●	●	●	●	●	●	●	●	●	●	●
		100	●	●	●	●	●	●	●	●	●	●	●
		125	●	●	●	●	●	●	●	●	●	●	●
		150	●	●	●	●	●	●	●	●	●	●	●
		175	●	●	●	●	●	●	●	●	●	●	●
		200	●	●	●	●	●	●	●	●	●	●	●
		225				●	●	●	●	●	●	●	
		250				●	●	●	●	●	●	●	
		275				●	●	●	●	●	●	●	
		300				●	●	●	●	●	●	●	
		325				●	●	●	●	●	●	●	
		350				●	●	●	●	●	●	●	
		375				●	●	●	●	●	●	●	
		400				●	●	●	●	●	●	●	
	Min. stroke	*1	50			30						55	
	Custom stroke	*1, 2	In 5 mm increments										

*1: The total dimensions are the same as the longer standard stroke.
*2: Special total length for custom stroke can be provided when a custom stroke is used. (Made to order)

How to order switch

SW - T0V

Switch model No.
(Item Ⓔ on page 450)

LCM
LCR
LCG
LCW
LCX
STM
STG
STS/STL
STR2
UCA2
ULK*
JSK/M2
JSG
JSC3/JSC4
USSD
UFCD
USC
UB
JSB3
LMB
LML
HCM
HCA
LBC
CAC4
UCAC2
CAC-N
UCAC-N
RCS2
RCC2
PCC
SHC
MCP
GLC
MFC
BBS
RRC
GRC
RV3*
NHS
HRL
LN
Hand
Chuk
MecHnd/Chuk
ShkAbs
FJ
FK
SpdContr
Ending

Internal structure and parts list (ø8 to ø80)

● Double acting/ standard single rod STS-$^{M}_{B}$

ø8/ø12/ø16

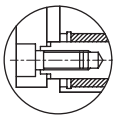

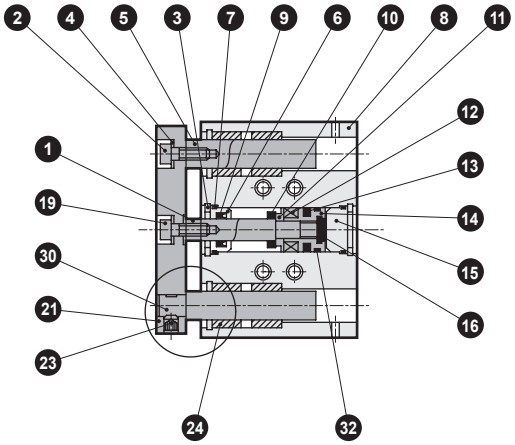

Metal bush bearing

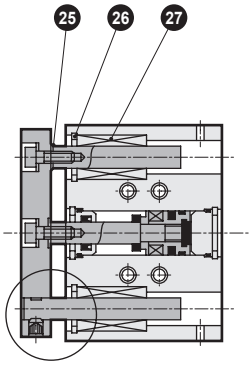

Ball bearing

ø20/ø25

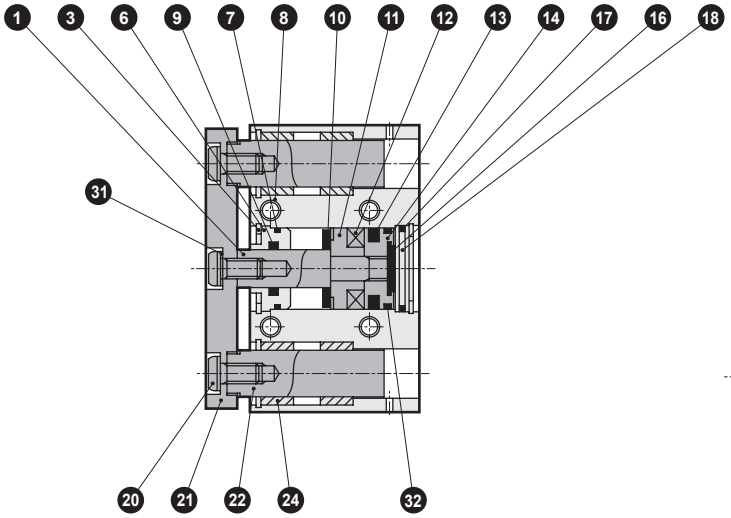

Metal bush bearing

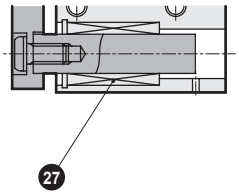

Ball bearing

ø32/ø40/ø50/ø63

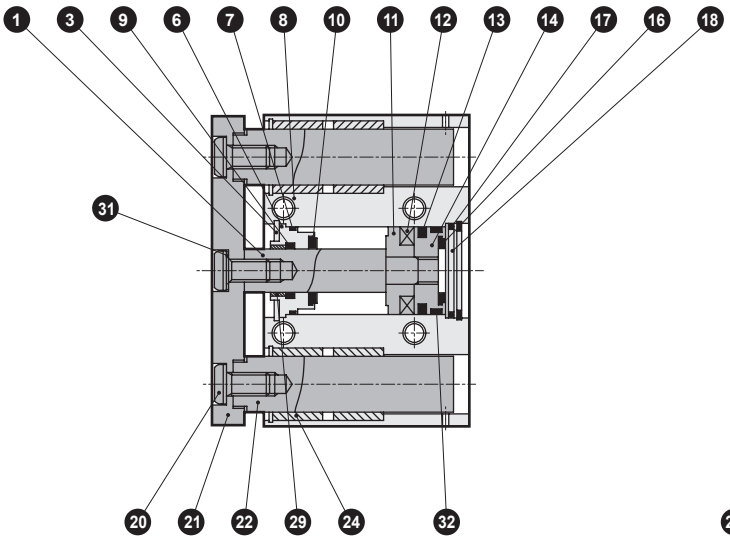

Metal bush bearing

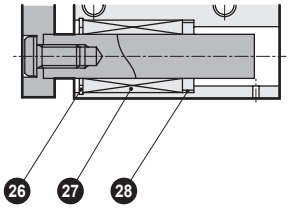

Ball bearing

Internal structure and parts list (ø8 to ø80)

● Double acting/
standard single rod
STS-$^{M}_{B}$

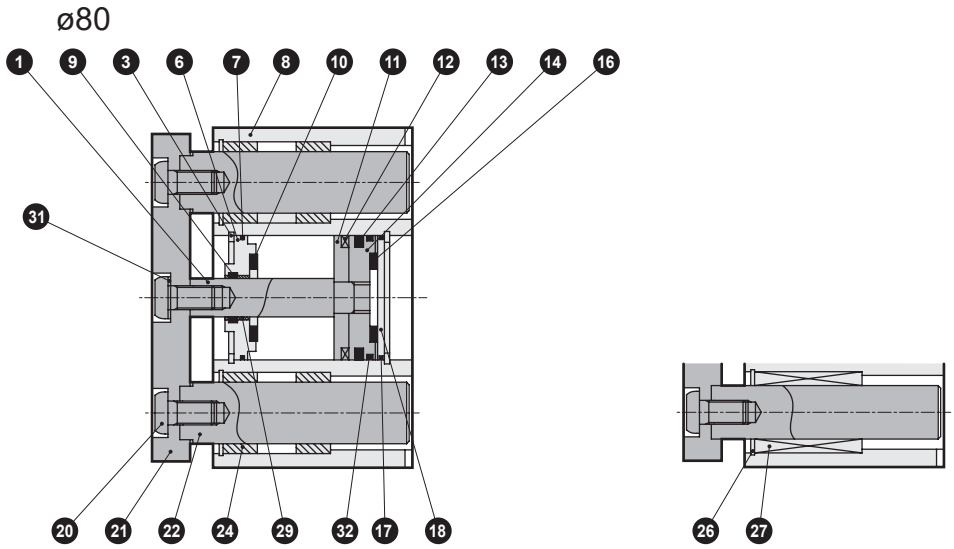

Metal bush bearing

Ball bearing

No.	Part name	Material	Remarks	No.	Part name	Material	Remarks
STS-$^{M}_{B}$ (Standard single rod)							
1	Piston rod	Stainless steel (ø8 to ø25) Steel (ø32 to ø80)	Industrial chrome plating	16	Cushion rubber (H)	Urethane rubber	
				17	O-ring	Nitrile rubber	
2	Hexagon socket head cap screw	Steel	Zinc chromate	18	Base plate	Aluminum alloy (ø20 to ø63)	Chromate
3	C-snap ring	Steel	Zinc phosphate				
4	Plain washer	Steel	Black finish			Steel (ø80)	Zinc chromate
5	Guide rod (1)	M: Stainless steel	Industrial chrome plating (ø12, ø16)	19	Hexagon nut (ø8)	Steel	Zinc chromate
		B: Alloy steel	Industrial chrome plating		Hex socket head cap screw (ø12, ø16)	Steel	Zinc chromate
6	Rod metal	Special aluminum alloy	Alumite (*1)	20	Hexagon socket button head bolt	Steel	Zinc chromate
7	Metal gasket	Nitrile rubber		21	End plate	Aluminum alloy	Alumite
8	Cylinder body	Aluminum alloy	Hard alumite	22	Guide rod (ø20 to ø80)	Steel	Industrial chrome plating
9	Rod packing	Nitrile rubber					
10	Cushion rubber (R)	Urethane rubber		23	Hexagon socket set screw (ø8, ø12)	Steel	Black finish
11	Spacer	Aluminum alloy (ø8 to ø12, ø63, ø80)	Chromate (ø8 to ø12, ø63, ø80)	24	Metal	Oil impregnated bearing alloy	
				25	Plain washer	Steel	Black finish
		Polyamide (ø20 to ø50)		26	C-snap ring	Steel	Zinc phosphate
12	Magnet			27	Ball bush		
13	Piston packing	Nitrile rubber		28	Collar	Aluminum alloy	
14	Piston	Special aluminum alloy (ø8) Aluminum alloy (ø12 to ø80)	Chromate (ø8, ø20 to ø80)	29	Bush	Oiles drymet	
				30	Guide rod (2) (ø8, ø12)	M: Stainless steel	Industrial chrome plating (ø12)
						B: Alloy steel	Industrial chrome plating
15	Cover	Aluminum alloy		31	Disc spring washer	Steel	
				32	Wear ring	Acetal resin	ø12 to ø80

*1: Chromate-coated for ø32 to ø50 only.

Repair parts list

Bore size (mm)	Kit No. STS-$^{M}_{B}$	Repair parts No.
ø8	STS-8K	7 9 10 13 16
ø12	STS-12K	7 9 10 13 16 32
ø16	STS-16K	
ø20	STS-20K	7 9 10 13 16 17 32
ø25	STS-25K	
ø32	STS-32K	
ø40	STS-40K	
ø50	STS-50K	
ø63	STS-63K	
ø80	STS-80K	

Note: Specify the kit No. when placing an order.

LCM
LCR
LCG
LCW
LCX
STM
STG
STS/STL
STR2
UCA2
ULK*
JSK/M2
JSG
JSC3/JSC4
USSD
UFCD
USC
UB
JSB3
LMB
LML
HCM
HCA
LBC
CAC4
UCAC2
CAC-N
UCAC-N
RCS2
RCC2
PCC
SHC
MCP
GLC
MFC
BBS
RRC
GRC
RV3*
NHS
HRL
LN
Hand
Chuk
MecHnd/Chuk
ShkAbs
FJ
FK
SpdContr
Ending

Internal structure and parts list (ø100)

● Double acting/
standard single rod
STS-$^{M}_{B}$

ø100

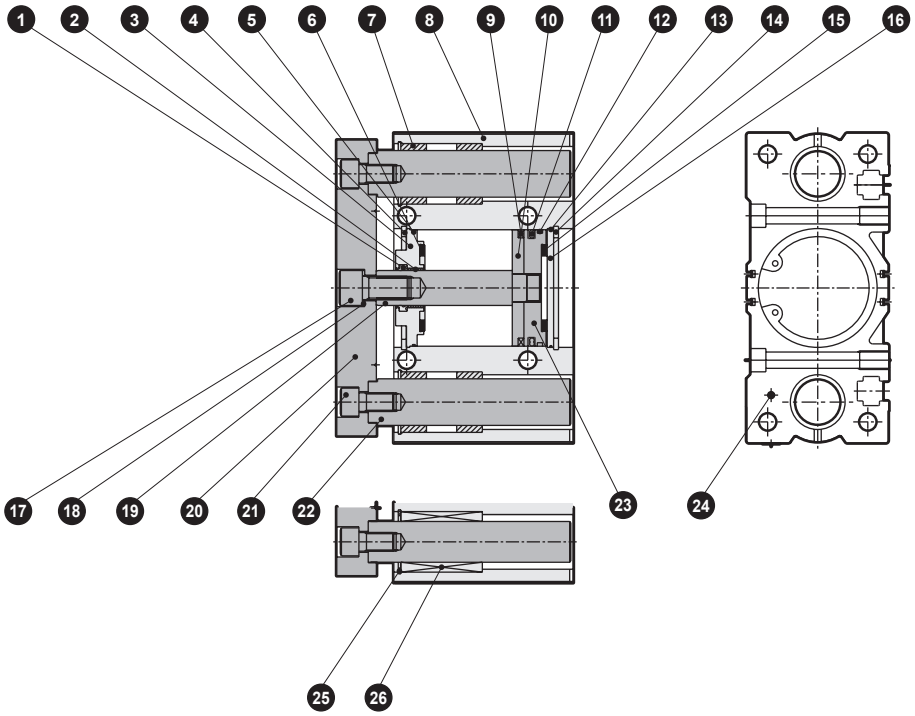

Mod No.	Part name	Material	Remarks	Mod No.	Part name	Material	Remarks
STS/L-$^{M}_{B}$ (Standard rod)							
1	Rod packing	Nitrile rubber		14	C-snap ring	Steel	Zinc phosphate
2	Bush	Oiles drymet		15	Cushion rubber (H)	Urethane rubber	
3	Rod metal	Aluminum alloy	Chromate	16	Base plate	Steel	Zinc chromate
4	C-snap ring	Steel	Zinc phosphate	17	Hexagon socket head cap screw	Steel	Zinc chromate
5	Metal gasket	Nitrile rubber		18	Disc spring washer	Steel	Zinc chromate
6	Cushion rubber (R)	Urethane rubber		19	Piston rod	Steel	Industrial chrome plating
7	Metal	Oil impregnated bearing alloy		20	End plate	Aluminum alloy	Alumite
8	Tube body	Aluminum alloy	Hard alumite	21	Hexagon socket head cap screw	Steel	Zinc chromate
9	Magnet			22	Guide rod	Steel	Industrial chrome plating
10	Spacer	Aluminum alloy	Chromate	23	Piston	Aluminum alloy	Chromate
11	Piston packing	Nitrile rubber		24	Hexagon socket set screw	Steel	Black finish
12	Wear ring	Acetal resin		25	C-snap ring	Steel	Zinc phosphate
13	O-ring	Nitrile rubber		26	Ball bearing		

Repair parts kit

Bore size (mm)	Kit No. STS-$^{M}_{B}$	Repair parts No.
ø100	STS-100K	1 5 6 11 12 13 15

Note: Specify the kit No. when placing an order.

Internal structure and parts list (ø8 to ø80)

● Double acting/standard single rod
STL-$^{M}_{B}$

ø8 /ø12//ø16

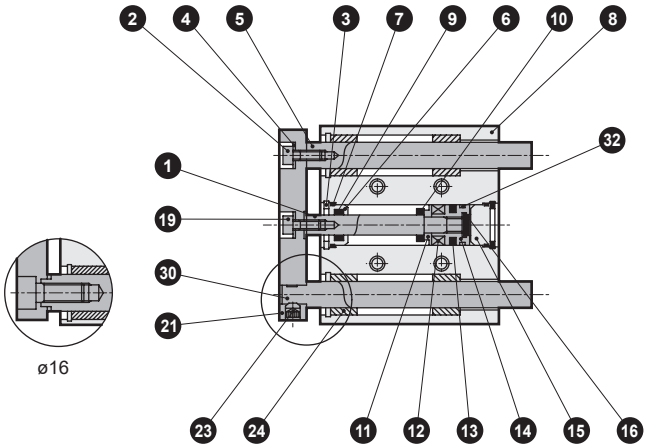

Metal bush bearing

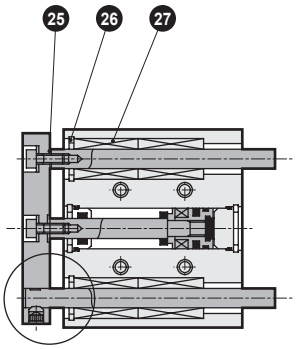

Ball bearing

ø20 /ø25

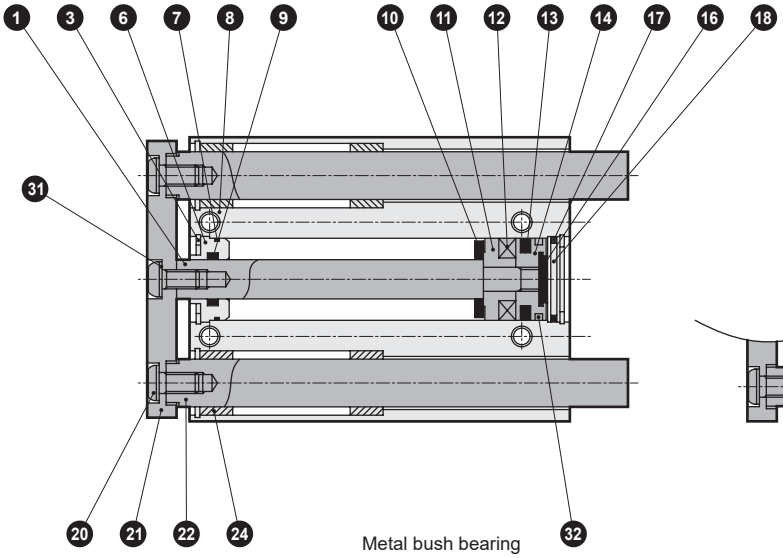

Metal bush bearing

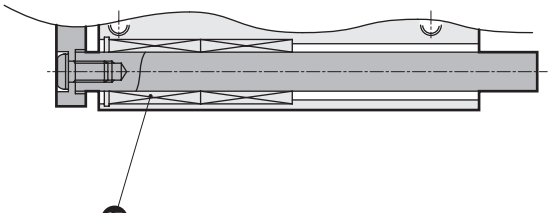

Ball bearing

ø32 /ø40 /ø50 /ø63

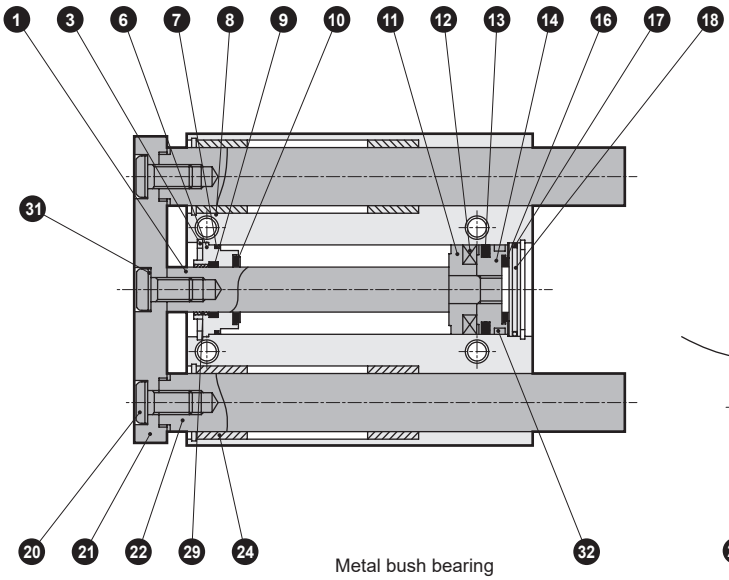

Metal bush bearing

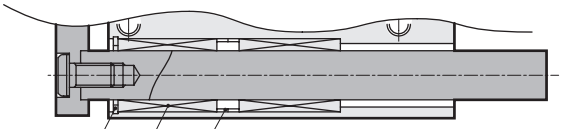

Ball bearing

LCM
LCR
LCG
LCW
LCX
STM
STG
STS/STL
STR2
UCA2
ULK*
JSK/M2
JSG
JSC3/JSC4
USSD
UFCD
USC
UB
JSB3
LMB
LML
HCM
HCA
LBC
CAC4
UCAC2
CAC-N
UCAC-N
RCS2
RCC2
PCC
SHC
MCP
GLC
MFC
BBS
RRC
GRC
RV3*
NHS
HRL
LN
Hand
Chuk
MecHnd/Chuk
ShkAbs
FJ
FK
SpdContr
Ending

Internal structure and parts list (ø8 to ø80)

● Standard single rod ø80

STL-$^{M}_{B}$

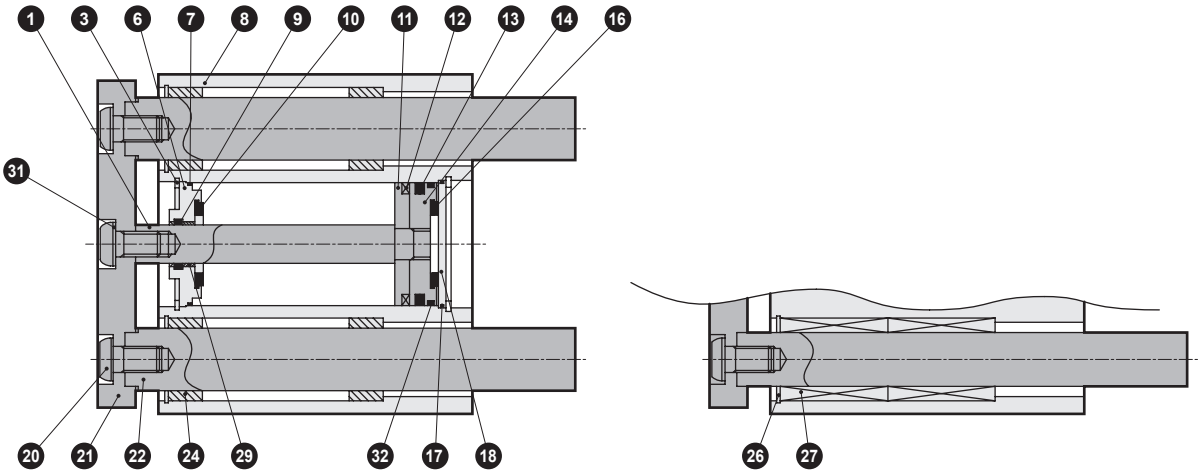

Metal bush bearing

Ball bearing

No.	Part name	Material	Remarks
STL-$^{M}_{B}$ (Double acting/standard single rod)			
1	Piston rod	Stainless steel (ø8 to ø25) Steel (ø32 to ø80)	Industrial chrome plating
2	Hexagon socket head cap screw	Steel	Zinc chromate
3	C-snap ring	Steel	Zinc phosphate
4	Plain washer	Steel	Black finish
5	Guide rod (1)	M: Stainless steel	Industrial chrome plating (ø12, ø16)
		B: Steel	Industrial chrome plating
6	Rod metal	Special aluminum alloy	Alumite (*1)
7	Metal gasket	Nitrile rubber	
8	Cylinder body	Aluminum alloy	Hard alumite
9	Rod packing	Nitrile rubber	
10	Cushion rubber (R)	Urethane rubber	
11	Spacer	Aluminum alloy (ø8 to ø12, ø63, ø80)	Chromate (ø8, ø12, ø63, ø80)
		Polyamide (ø20 to ø50)	
12	Magnet		
13	Piston packing	Nitrile rubber	
14	Piston	Special aluminum alloy (ø8) Aluminum alloy (ø12 to ø80)	Chromate
15	Cover	Aluminum alloy	

*1: Chromate-coated for ø32 to ø50 only.

No.	Part name	Material	Remarks
16	Cushion rubber (H)	Urethane rubber	
17	O-ring	Nitrile rubber	
18	Base plate	Aluminum alloy (ø20 to ø63)	Chromate (ø20 to ø63)
		Steel (ø80)	Zinc chromate (ø80)
19	Hexagon nut (ø8)	Steel	Zinc chromate
	Hex socket head cap screw (ø12, ø16)	Steel	
20	Hexagon socket button head bolt	Steel	Zinc chromate
21	End plate	Aluminum alloy	Alumite
22	Guide rod (ø20 to ø80)	Steel	Industrial chrome plating
23	Hexagon socket set screw (ø8, ø12)	Steel	Black finish
24	Metal	Oil impregnated bearing alloy	
25	Plain washer	Steel	Black finish
26	C-snap ring	Steel	Zinc phosphate
27	Ball bush		
28	Collar	Aluminum alloy	
29	Bush	Oiles drymet	
30	Guide rod (2) (ø8, ø12)	M: Stainless steel	Industrial chrome plating (ø12)
		B: Steel	Industrial chrome plating
31	Disc spring washer	Steel	
32	Wear ring	Acetal resin	ø12 to ø80

Repair parts list

Bore size (mm)	Kit No. STL-$^{M}_{B}$	Repair parts No.
ø8	STS-8K	7 9 10 13 16
ø12	STS-12K	7 9 10 13 16 32
ø16	STS-16K	
ø20	STS-20K	7 9 10 13 16 17 32
ø25	STS-25K	
ø32	STS-32K	
ø40	STS-40K	
ø50	STS-50K	
ø63	STS-63K	
ø80	STS-80K	

Note: Specify the kit No. when placing an order.

Internal structure and parts list (ø100)

● Double acting/
standard single rod
STL-$^{M}_{B}$

ø100

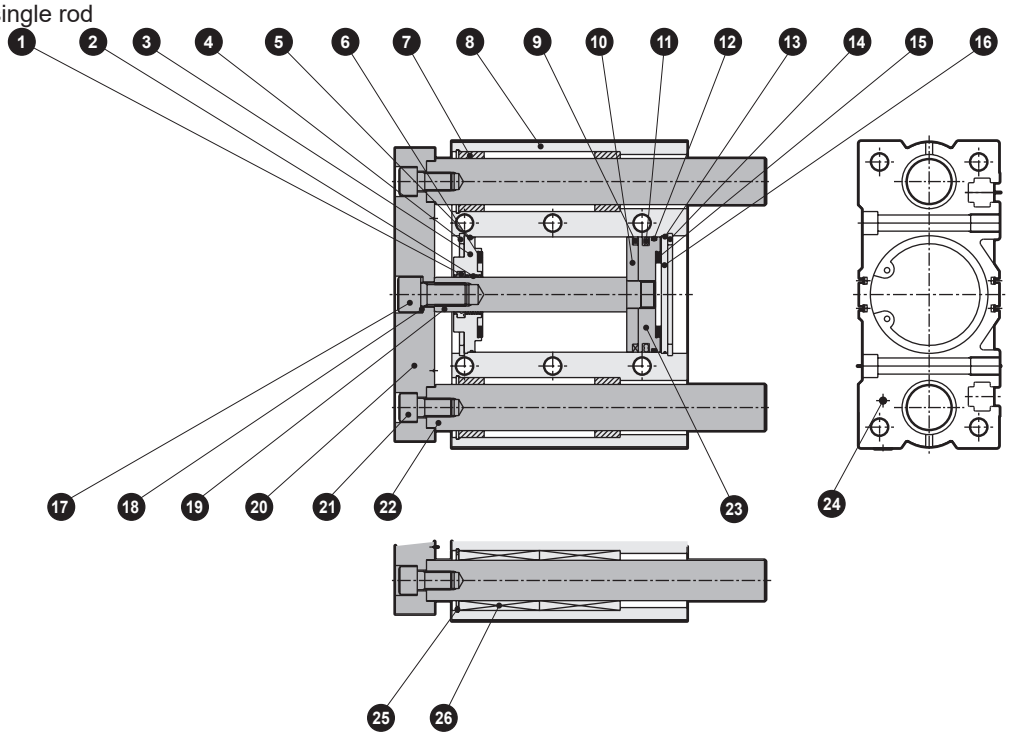

Mod No.	Part name	Material	Remarks	Mod No.	Part name	Material	Remarks
STS/L-$^{M}_{B}$ (Standard rod)							
1	Rod packing	Nitrile rubber		14	C-snap ring	Steel	Zinc phosphate
2	Bush	Oiles drymet		15	Cushion rubber (H)	Urethane rubber	
3	Rod metal	Aluminum alloy	Chromate	16	Base plate	Steel	Zinc chromate
4	C-snap ring	Steel	Zinc phosphate	17	Hexagon socket head cap screw	Steel	Zinc chromate
5	Metal gasket	Nitrile rubber		18	Disc spring washer	Steel	
6	Cushion rubber (R)	Urethane rubber		19	Piston rod	Steel	Industrial chrome plating
7	Metal	Oil impregnated bearing alloy		20	End plate	Aluminum alloy	Alumite
8	Tube body	Aluminum alloy	Hard alumite	21	Hexagon socket head cap screw	Steel	Zinc chromate
9	Magnet			22	Guide rod	Steel	Industrial chrome plating
10	Spacer	Aluminum alloy	Chromate	23	Piston	Aluminum alloy	Chromate
11	Piston packing	Nitrile rubber		24	Hexagon socket set screw	Steel	Black finish
12	Wear ring	Acetal resin		25	C-snap ring	Steel	Zinc phosphate
13	O-ring	Nitrile rubber		26	Ball bearing		

Repair parts kit

Bore size (mm)	Kit No. STL-$^{M}_{B}$	Repair parts No.
ø100	STS-100K	1 5 6 11 12 13 15

Note: Specify the kit No. when placing an order.

LCM
LCR
LCG
LCW
LCX
STM
STG
STS/STL
STR2
UCA2
ULK*
JSK/M2
JSG
JSC3/JSC4
USSD
UFCD
USC
UB
JSB3
LMB
LML
HCM
HCA
LBC
CAC4
UCAC2
CAC-N
UCAC-N
RCS2
RCC2
PCC
SHC
MCP
GLC
MFC
BBS
RRC
GRC
RV3*
NHS
HRL
LN
Hand
Chuk
MecHnd/Chuk
ShkAbs
FJ
FK
SpdContr
Ending

Internal structure and parts list (Copper and PTFE free/Corrosion proof ø8 to ø100)

● Copper and PTFE free
STS-$^{M}_{B}$-P6 * P6 does not include a ㉙ bush.

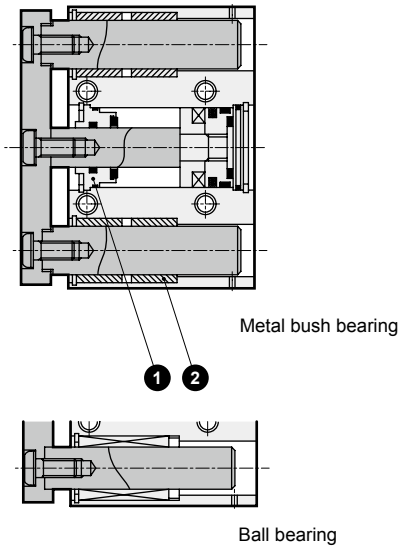

● Copper and PTFE free
STL-$^{M}_{B}$-P6 * P6 does not include a ㉙ bush.

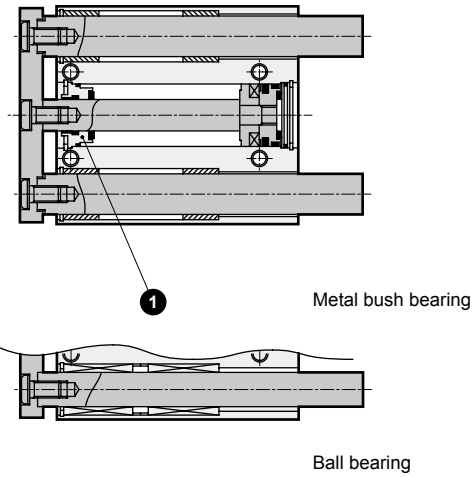

● Corrosion proof
STS-$^{M}_{B}$-M/M1

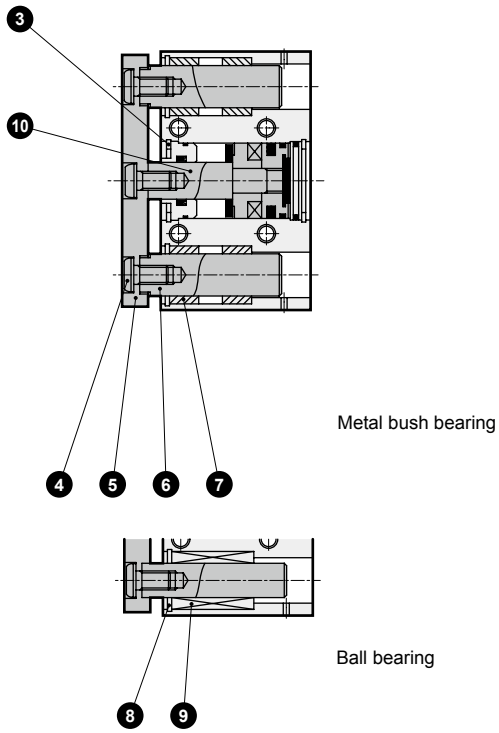

● Corrosion proof
STL-$^{M}_{B}$-M/M1

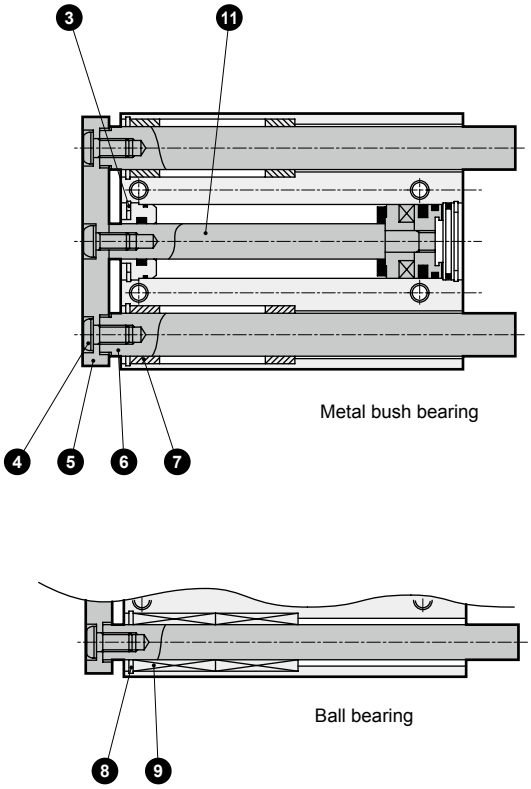

Parts list (Parts not listed below are the same as those of the double acting/standard single rod. Refer to pages 453 to 457.)

No.	Part name	Material	Remarks	No.	Part name	Material	Remarks
ST$^{S}_{L}$-$^{M}_{B}$-P6 (copper and PTFE free)				6	Guide rod	Stainless steel	Industrial chrome plating (M type only)
1	Rod metal	Special aluminum alloy		7	Metal	Bearing with solid lubricant	
2	Metal	Cast iron oil-impregnated bearing		8	Adaptor (ø8 to ø16)	Aluminum alloy	
ST$^{S}_{L}$-$^{M}_{B}$-M/M1 (corrosion proof)					C type snap ring (ø32 to ø100)	Stainless steel	
3	C type snap ring	Stainless steel		9	Ball bush	Made of stainless steel	
4	Hex socket button head bolt (ø8 to ø80) Hex socket head cap screw (ø100)	Stainless steel		10	Piston rod	Stainless steel Steel (ø8 to ø100)	Industrial chrome plating
5	End plate	M: Aluminum alloy	Alumite	11	Piston rod	Stainless steel Steel (ø8 to ø100)	Industrial chrome plating
		M1: Stainless steel					

Dimensions: ø8/ø12/ø16

CAD

- Standard single rod STS-$^{M}_{B}$
- Corrosion proof STS-$^{M}_{B}$-M/M1

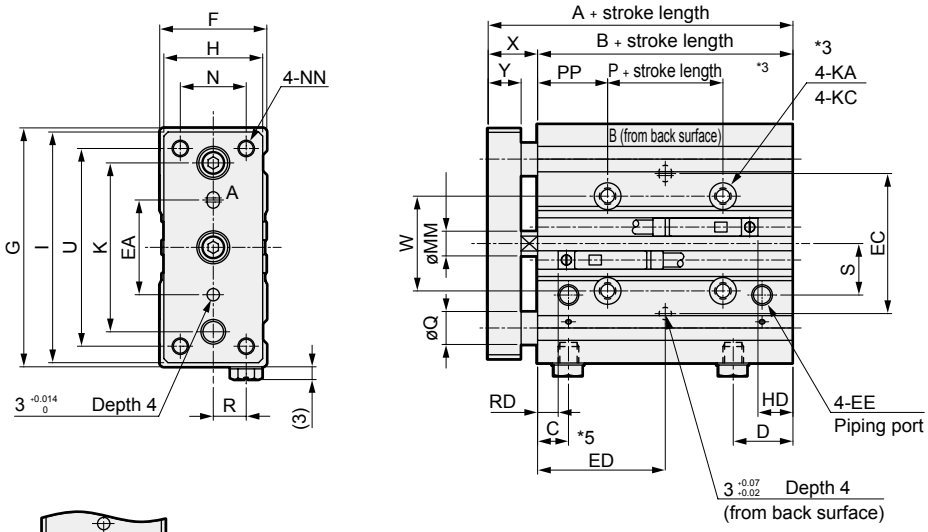

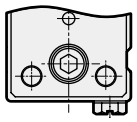

ø16

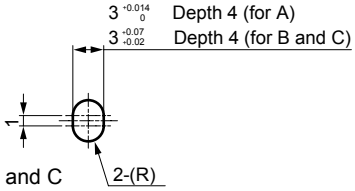

Slot dimensions for A, B and C

Code / Bore size (mm)	Standard stroke length (mm)	A	B	C	D	DD	EE	EA	EC	ED	EG	F	G	H	HH
ø8	10, 20, 30 40, 50	40	28	11	14.5	6.5	M5	20	25	15+ Stroke length/2	20	24	53	22	M4 depth 8
ø12		44	32	7.5	14.5	7.5	M5	23	34	16+ Stroke length/2	20	26	58	24	M4 depth 8
ø16		45	32	7.5	17	7.5	M5	24	36	16+ Stroke length/2	24	30	64	28	M5 depth 10

Code / Bore size (mm)	I	JJ	K	KA	KC	MM	N	NN	P	PP	Q STS-M	Q STS-B	R
ø8	51	M4 depth 10	40	3.3 through	6.5 spot face depth 3.3	4	15	M4 through	-10	20	6	5	7.5
ø12	56	M4 depth 10	41	3.3 through	6.5 spot face depth 3.3	6	16	M4 through	-2	17	8	6	8
ø16	62	M5 depth 10	46	4.3 through	8 spot face depth 4.4	8	18	M5 through	-2	17	10	8	10

Code / Bore size (mm)	S	U	V	W	WW	X	Y	T0/T5/T2/T3 RD	T0/T5/T2/T3 HD	T2W/T3W RD	T2W/T3W HD
ø8	13.5	43	16	25	45	$12^{0}_{-1.5}$	8	6.5	2.5	8.5	4.5
ø12	12.5	48	17	23	50	$12^{0}_{-1.5}$	8	5	8.5	7	10.5
ø16	13	52	22	25	54	$13^{0}_{-1.5}$	9	4.5	9.5	6	11.5

*1 : HD and RD dimensions for 10 mm stroke length differ from these dimensions according to the setting.
*2 : When using a custom stroke length, the dimensions are the same as the longer standard stroke length.
*3 : 2-KA, 2-KC and 2-JJ (two mounting holes) for STS-$^{M}_{B}$-8-10 (10 mm stroke length).
*4 : Refer to pages 552 and 553 for RD, HD and protruding dimensions of the 2-color display (except for T2WH/V and T3WH/V), off-delay, AC magnetic field proof and T1H/V switches.
*5 : ED is 5 for STS-$^{M}_{B}$-8-10 (10 mm stroke length).
*6 : For STS-$^{M}_{B}$-16-10 (10 mm stroke length), use only two mounting holes for JJ M5 screw, although there are four mounting holes in the figure.

LCM
LCR
LCG
LCW
LCX
STM
STG
STS/STL
STR2
UCA2
ULK*
JSK/M2
JSG
JSC3/JSC4
USSD
UFCD
USC
UB
JSB3
LMB
LML
HCM
HCA
LBC
CAC4
UCAC2
CAC-N
UCAC-N
RCS2
RCC2
PCC
SHC
MCP
GLC
MFC
BBS
RRC
GRC
RV3*
NHS
HRL
LN
Hand
Chuk
MecHnd/Chuk
ShkAbs
FJ
FK
SpdContr
Ending

Dimensions: ø20/ø25

CAD

- Standard single rod STS-$^{M}_{B}$
- Corrosion proof STS-$^{M}_{B}$-M/M1

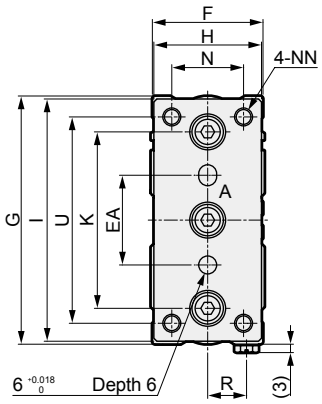

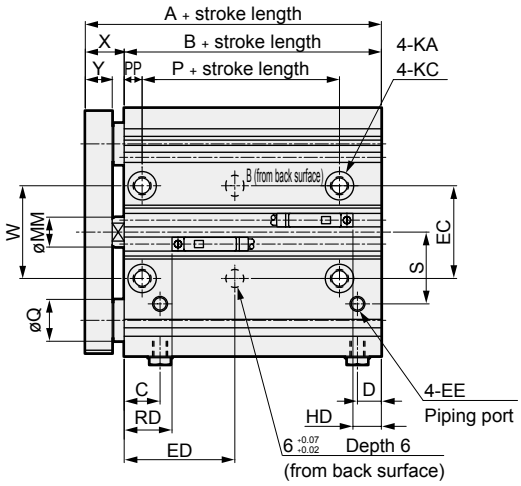

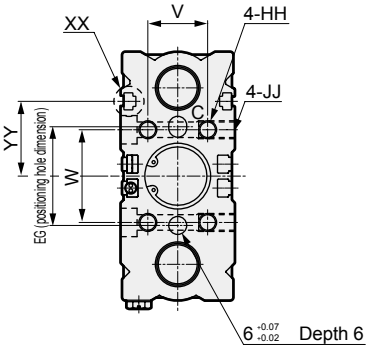

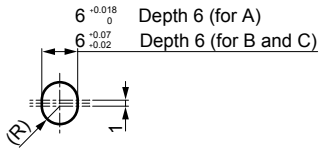

Slot dimensions for A, B and C

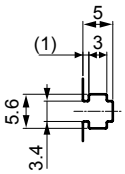

XX section details

Code / Bore size (mm)	Standard stroke length (mm)	A	B	C	D	EE	EA	EC	EG	ED	F	G	H	HH
ø20	25, 50	53	40	12	8	M5	30	31	33	14+ Stroke length/2	38	83	36	M6 depth 12
ø25		54	41	12	9	M5	32	35	37	14.5+ Stroke length/2	42	86	38	M6 depth 12

Code / Bore size (mm)	I	JJ	K	KA	KC	MM	N	NN	P	PP	Q STS-M	Q STS-B	R
ø20	81	M6 depth 12	59	5.2 through	9.5 spot face depth 5.4	10	24	M6 through	20	6	14	12	13
ø25	84	M6 depth 12	63	5.2 through	9.5 spot face depth 5.4	12	26	M6 through	20	6	14	12	14

Code / Bore size (mm)	S	U	V	W	X	Y	YY	T0/T5/T2/T3 RD	T0/T5/T2/T3 HD	T2W/T3W RD	T2W/T3W HD
ø20	24	69	20	31	13 0 -2	9	25	12	9.5	12.5	12.5
ø25	26	72	24	35	13 0 -2	9	27	13	9	14.5	11

*1 : When using a custom stroke length, the dimensions are the same as the longer standard stroke length.
*2 : Refer to pages 552 and 553 for RD, HD and protruding dimensions of the 2-color display (except for T2WH/V and T3WH/V), off-delay, AC magnetic field proof, T1H/V and T8H/V switches.

Dimensions: ø32/ø40/ø50/ø63

CAD

- Standard single rod STS-$^{M}_{B}$
- Corrosion proof STS-$^{M}_{B}$-M/M1

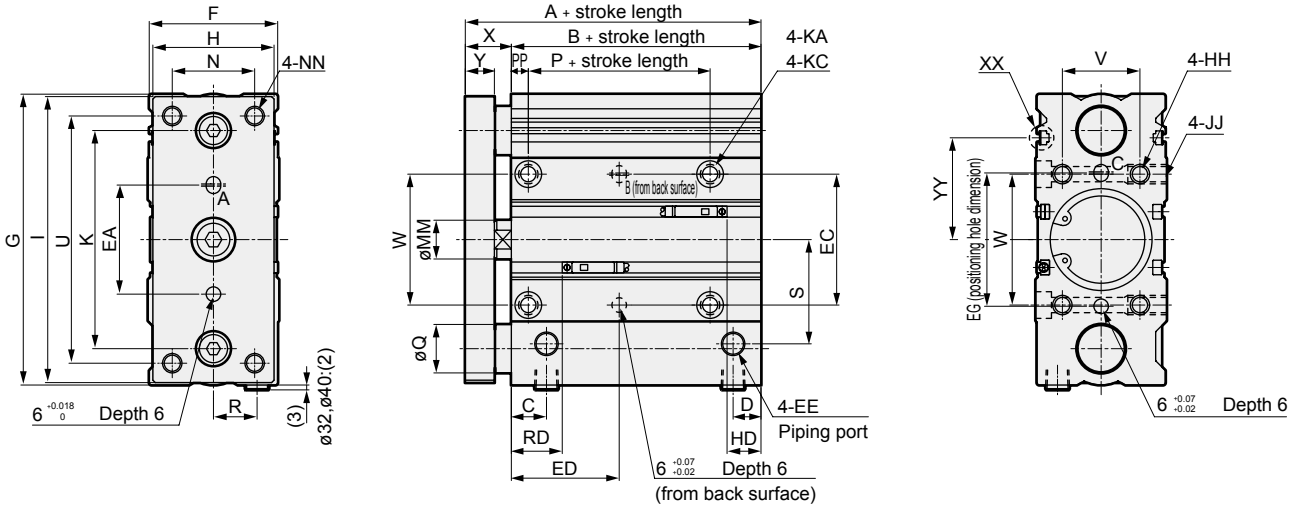

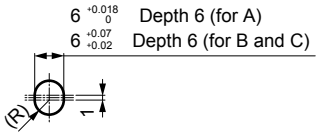

Slot dimensions for A, B and C

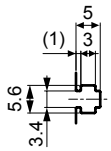

XX section details

Code / Bore size (mm)	Standard stroke length (mm)	A	B	C	D	EE	EA	EC	EG	ED	F	G	H	HH
ø32	25, 50	68	49	14	10.5	Rc1/8	42	45	46	17.5+ Stroke length/2	47	111	45	M8 depth 16
ø40		72	53	14.5	12	Rc1/8	45	54	55	19.5+ Stroke length/2	54	120	50	M8 depth 16
ø50		77	55	16	12.5	Rc1/4	55	66	69	19.5+ Stroke length/2	66	147	64	M10 depth 20
ø63		83	61	17.5	17.5	Rc1/4	62	79	82	22.5+ Stroke length/2	79	162	75	M10 depth 20

Code / Bore size (mm)	I	JJ	K	KA	KC	MM	N	NN	P	PP	Q STS-M	Q STS-B	R
ø32	109	M8 depth 16	81	6.3 through	11 spot face depth 6.5	16	29	M8 through	22	7	20	16	16
ø40	118	M8 depth 16	90	6.3 through	11 spot face depth 6.5	16	34	M8 through	25	7	20	16	18
ø50	145	M10 depth 20	110	8.6 through	14 spot face depth 8.6	20	44	M10 through	26	8	25	20	22
ø63	160	M10 depth 20	124	8.6 through	14 spot face depth 8.6	20	55	M10 through	26	8	25	20	26

Code / Bore size (mm)	S	U	V	W	X	Y	YY	T0/T5/T2/T3 RD	T0/T5/T2/T3 HD	T2W/T3W RD	T2W/T3W HD
ø32	39	93	25	45	19 $^{0}_{-2}$	12	39	17.5	13.5	19	15
ø40	43	102	32	54	19 $^{0}_{-2}$	12	42	21	14	22.5	16
ø50	49	125	38	66	22 $^{0}_{-2}$	16	45	22	16	23.5	16.5
ø63	56	140	50	79	22 $^{0}_{-2}$	16	52	20	23	21.5	24.5

*1 : When using a custom stroke length, the dimensions are the same as the longer standard stroke length.
*2 : Refer to pages 552 and 553 for RD, HD and protruding dimensions of the 2-color display (except for T2WH/V and T3WH/V), off-delay, AC magnetic field proof, T1H/V and T8H/V switches.

LCM
LCR
LCG
LCW
LCX
STM
STG
STS/STL
STR2
UCA2
ULK*
JSK/M2
JSG
JSC3/JSC4
USSD
UFCD
USC
UB
JSB3
LMB
LML
HCM
HCA
LBC
CAC4
UCAC2
CAC-N
UCAC-N
RCS2
RCC2
PCC
SHC
MCP
GLC
MFC
BBS
RRC
GRC
RV3*
NHS
HRL
LN
Hand
Chuk
MecHnd/Chuk
ShkAbs
FJ
FK
SpdContr
Ending

Dimensions: ø80

CAD

- Standard single rod STS-$^{M}_{B}$
- Corrosion proof STS-$^{M}_{B}$-M/M1

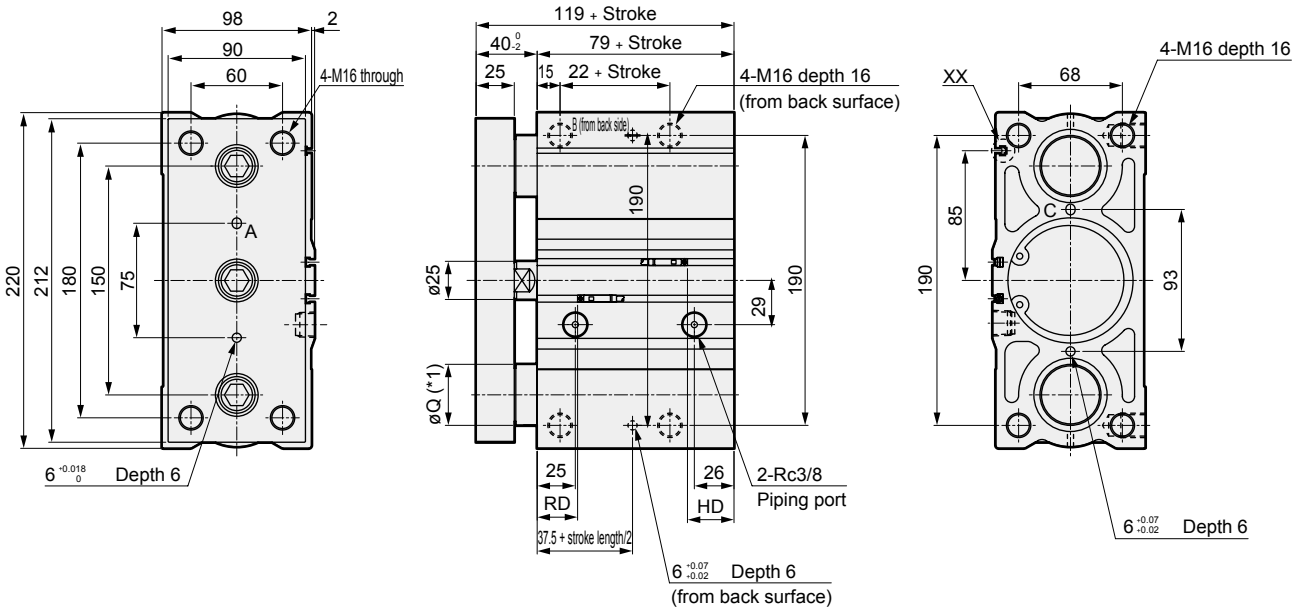

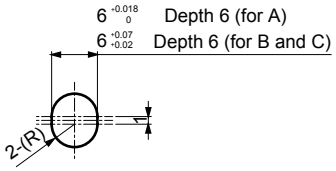

Slot dimensions for A, B and C

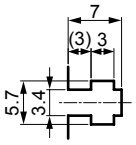

XX section details

Code	T0/T5/T2/T3		T2W/T3W	
Bore size (mm)	RD	HD	RD	HD
ø80	26.5	30.5	28	35.5

*1 : ø40 for M (metal bush bearing) and ø35 for B (ball bearing).

*2 : When using a custom stroke length, the dimensions are the same as the longer standard stroke length. The standard stroke lengths of ø80 are 25, 50, 75 and 100 mm.

*3 : Refer to pages 552 and 553 for RD, HD and protruding dimensions of the 2-color display (except for T2WH/V and T3WH/V), off-delay, AC magnetic field proof, T1H/V and T8H/V switches.

Dimensions: ø100

- Standard single rod STS-M/B
- Corrosion proof STS-M/B-M/M1
- Copper and PTFE free STS-M/B-P6

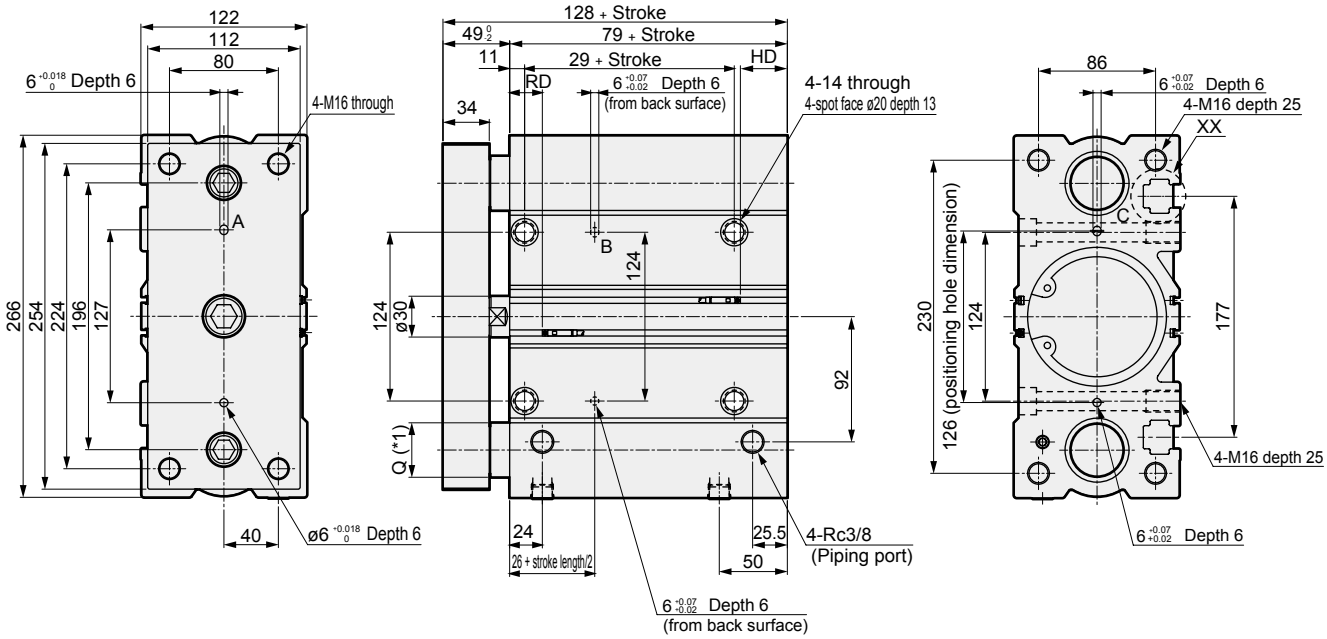

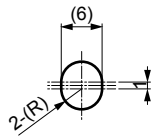

Slot dimensions for A, B and C

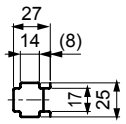

XX section details

Code	T0/T5/T2/T3		T2W/T3W	
Bore size (mm)	RD	HD	RD	HD
ø100	24	34.5	27	37

*1 : Dimension Q is ø40 for M (metal bush bearing) and ø35 for B (ball bearing).

*2 : Refer to pages 552 and 553 for RD, HD and protruding dimensions of the 2-color display (except for T2WH/V and T3WH/V), off-delay, AC magnetic field proof, T1H/V and T8H/V switches.

LCM
LCR
LCG
LCW
LCX
STM
STG
STS/STL
STR2
UCA2
ULK*
JSK/M2
JSG
JSC3/JSC4
USSD
UFCD
USC
UB
JSB3
LMB
LML
HCM
HCA
LBC
CAC4
UCAC2
CAC-N
UCAC-N
RCS2
RCC2
PCC
SHC
MCP
GLC
MFC
BBS
RRC
GRC
RV3*
NHS
HRL
LN
Hand
Chuk
MecHnd/Chuk
ShkAbs
FJ
FK
SpdContr
Ending

Dimensions: ø8/ø12/ø16

CAD

● Standard single rod STL-$^{M}_{B}$
● Corrosion proof STL-$^{M}_{B}$-M/M1

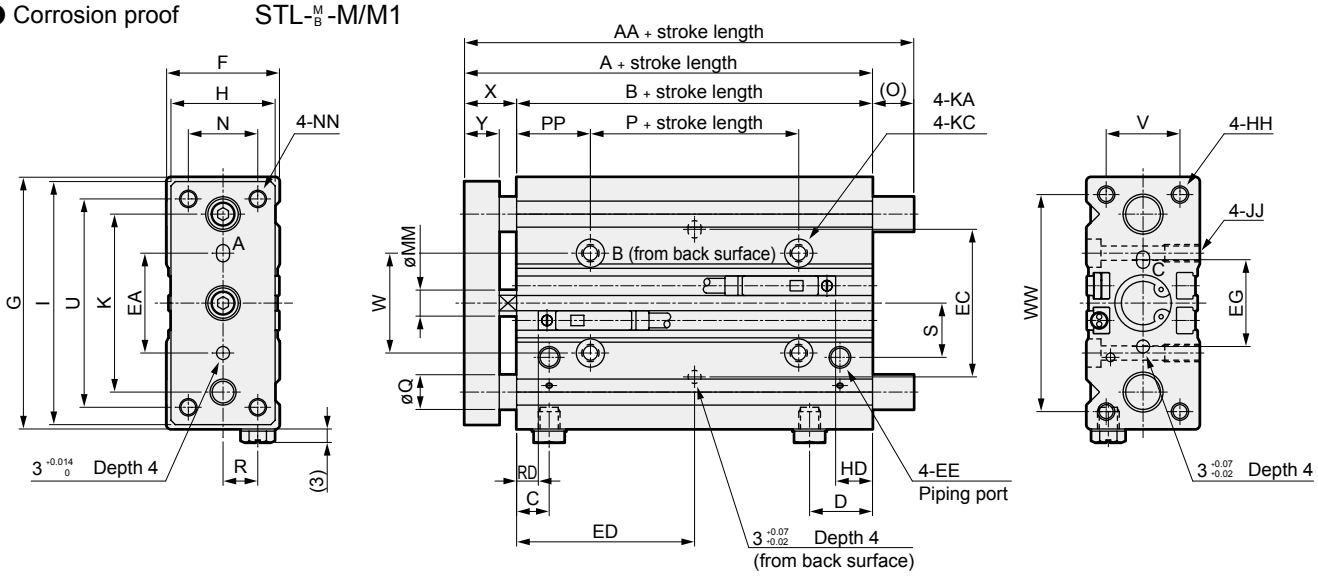

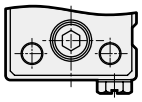

ø16

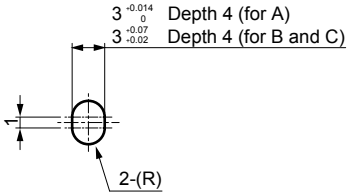

Code / Bore size (mm)	Standard stroke length (mm)	A	AA	B	C	D	DD	EE	EA	EC	ED	EG	F	G	H	HH
ø8	50, 75, 100, 125, 150, 175, 200	40	46	28	11	14.5	6.5	M5	20	25	15+ Stroke length/2	20	24	53	22	M4 depth 8
ø12		44	53.5	32	7.5	14.5	7.5	M5	23	34	16+ Stroke length/2	20	26	58	24	M4 depth 8
ø16		45	64	32	7.5	17	7.5	M5	24	36	16+ Stroke length/2	24	30	64	28	M5 depth 10

Code / Bore size (mm)	I	JJ	K	KA	KC	MM	N	NN	O	P	PP	Q STL-M	Q STL-B	R
ø8	51	M4 depth 10	40	3.3 through	6.5 spot face depth 3.3	4	15	M4 through	6	-10	20	6	5	7.5
ø12	56	M4 depth 10	41	3.3 through	6.5 spot face depth 3.3	6	16	M4 through	9.5	-2	17	8	6	8
ø16	62	M5 depth 10	46	4.3 through	8 spot face depth 4.4	8	18	M5 through	19	-2	17	10	8	10

Code / Bore size (mm)	S	U	V	W	WW	X	Y	T0/T5/T2/T3 RD	T0/T5/T2/T3 HD	T2W/T3W RD	T2W/T3W HD
ø8	13.5	43	16	25	45	12 $^{0}_{-1.5}$	8	6.5	2.5	8.5	4.5
ø12	12.5	48	17	23	50	12 $^{0}_{-1.5}$	8	5	8.5	7	10.5
ø16	13	52	22	25	54	13 $^{0}_{-1.5}$	9	4.5	9.5	6	11.5

*1 : When using a custom stroke length, the dimensions are the same as the longer standard stroke length.
*2 : Refer to pages 552 and 553 for RD, HD and protruding dimensions of the 2-color display (except for T2WH/V and T3WH/V), off-delay, AC magnetic field proof and T1H/V switches.

Dimensions: ø20/ø25

- Standard single rod STL-$^{M}_{B}$
- Corrosion proof STL-$^{M}_{B}$-M/M1

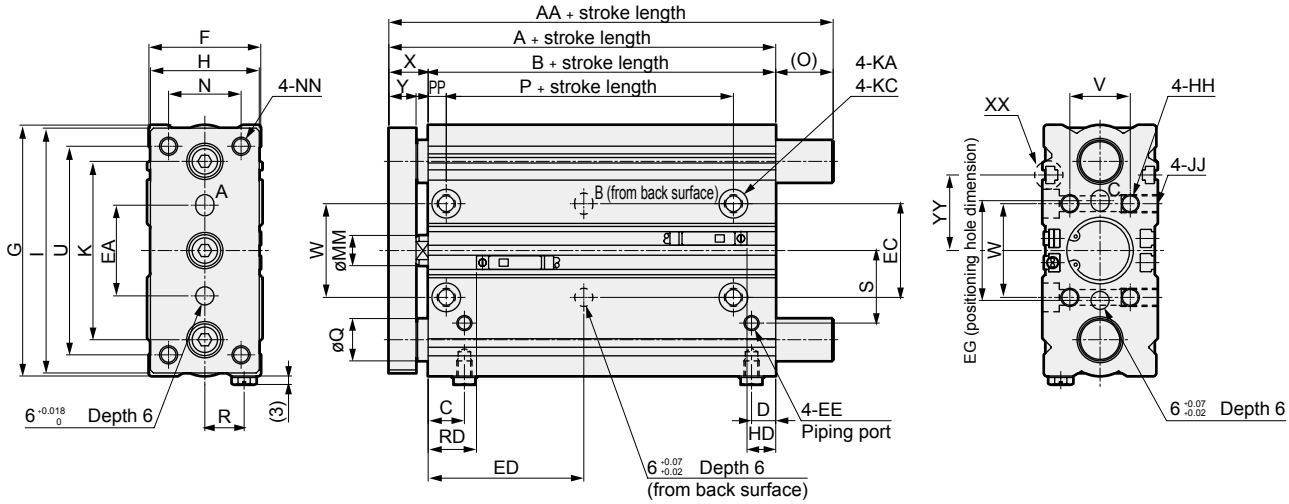

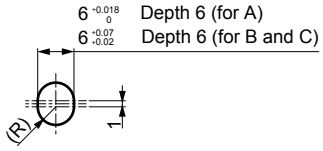

Slot dimensions for A, B and C

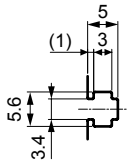

XX section details

Code / Bore size (mm)	Standard stroke length (mm)	A	AA	B	C	D	EE	EA	EC	EG	ED	F	G	H
ø20	50, 75, 100, 125, 150, 175, 200, 225,	53	72	40	12	8	M5	30	31	33	14.0+ Stroke length/2	38	83	36
ø25	250, 275, 300, 325, 350, 375, 400	54	72	41	12	9	M5	32	35	37	14.5+ Stroke length/2	42	86	38

Code / Bore size (mm)	HH	I	JJ	K	KA	KC	MM	N	NN	O	P	PP	Q STL-M	Q STL-B	R
ø20	M6 depth 12	81	M6 depth 12	59	5.2 through	9.5 spot face depth 5.4	10	24	M6 through	19	20	6	14	12	13
ø25	M6 depth 12	84	M6 depth 12	63	5.2 through	9.5 spot face depth 5.4	12	26	M6 through	18	20	6	14	12	14

Code / Bore size (mm)	S	U	V	W	X	Y	YY	T0/T5/T2/T3 RD	T0/T5/T2/T3 HD	T2W/T3W RD	T2W/T3W HD
ø20	24	69	20	31	13^{0}_{-2}	9	25	12	9.5	12.5	12.5
ø25	26	72	24	35	13^{0}_{-2}	9	27	13	9	14.5	11

*1 : When using a custom stroke length, the dimensions are the same as the longer standard stroke length.
*2 : Refer to pages 552 and 553 for RD, HD and protruding dimensions of the 2-color display (except for T2WH/V and T3WH/V), off-delay, AC magnetic field proof, T1H/V and T8H/V switches.

LCM
LCR
LCG
LCW
LCX
STM
STG
STS/STL
STR2
UCA2
ULK*
JSK/M2
JSG
JSC3/JSC4
USSD
UFCD
USC
UB
JSB3
LMB
LML
HCM
HCA
LBC
CAC4
UCAC2
CAC-N
UCAC-N
RCS2
RCC2
PCC
SHC
MCP
GLC
MFC
BBS
RRC
GRC
RV3*
NHS
HRL
LN
Hand
Chuk
MecHnd/Chuk
ShkAbs
FJ
FK
SpdContr
Ending

Dimensions: ø32/ø40/ø50/ø63

CAD

- Standard single rod STL-$^{M}_{B}$
- Corrosion proof STL-$^{M}_{B}$-M/M1

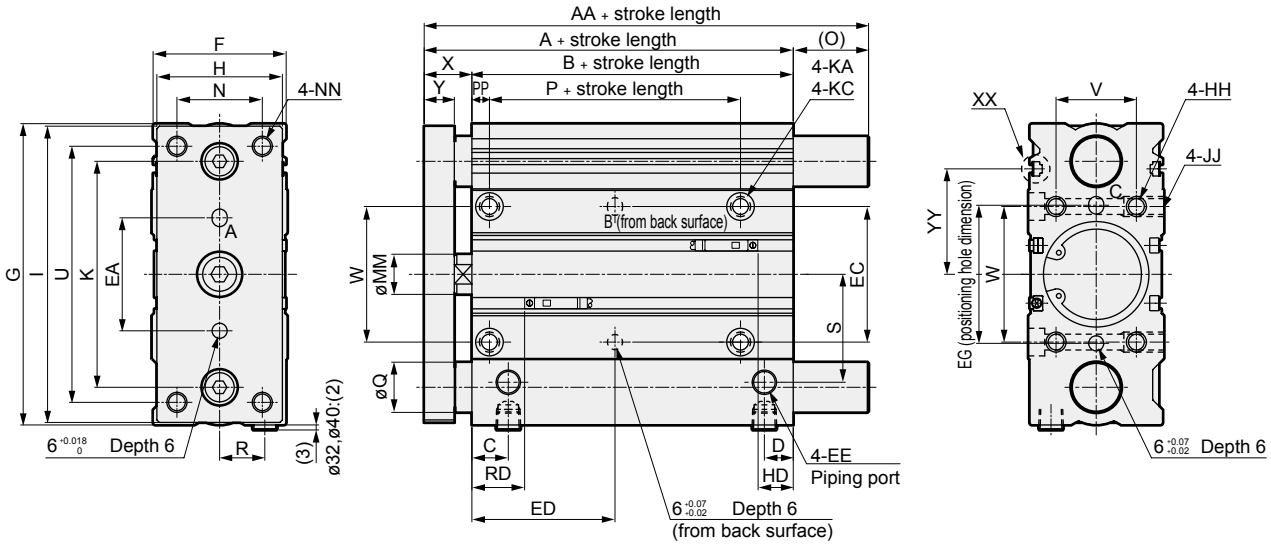

Slot dimensions for A, B and C

XX section details

Code / Bore size (mm)	Standard stroke length (mm)	A	AA	B	C	D	EE	EA	EC	EG	ED	F	G	H	HH
ø32	50, 75, 100, 125, 150, 175, 200, 225, 250, 275, 300, 325, 350, 375, 400	68	102	49	14	10.5	Rc1/8	42	45	46	17.5+ Stroke length/2	47	111	45	M8 depth 16
ø40		72	102	53	14.5	12	Rc1/8	45	54	55	19.5+ Stroke length/2	54	120	50	M8 depth 16
ø50		77	125	55	16	12.5	Rc1/4	55	66	69	19.5+ Stroke length/2	66	147	64	M10 depth 20
ø63		83	125	61	17.5	17.5	Rc1/4	62	79	82	22.5+ Stroke length/2	79	162	75	M10 depth 20

Code / Bore size (mm)	I	JJ	K	KA	KC	MM	N	NN	O	P	PP	Q STL-M	Q STL-B	R	S	U	V	W
ø32	109	M8 depth 16	81	6.3 through	11 spot face depth 6.5	16	29	M8 through	34	22	7	20	16	16	39	93	25	45
ø40	118	M8 depth 16	90	6.3 through	11 spot face depth 6.5	16	34	M8 through	30	25	7	20	16	18	43	102	32	54
ø50	145	M10 depth 20	110	8.6 through	14 spot face depth 8.6	20	44	M10 through	48	26	8	25	20	22	49	125	38	66
ø63	160	M10 depth 20	124	8.6 through	14 spot face depth 8.6	20	55	M10 through	42	26	8	25	20	26	56	140	50	79

Code / Bore size (mm)	X	Y	YY	T0/T5/T2/T3 RD	T0/T5/T2/T3 HD	T2W/T3W RD	T2W/T3W HD
ø32	19 $^{0}_{-2}$	12	39	17.5	13.5	19	15
ø40	19 $^{0}_{-2}$	12	42	21	14	22.5	16
ø50	22 $^{0}_{-2}$	16	45	22	16	23.5	16.5
ø63	22 $^{0}_{-2}$	16	52	20	23	21.5	24.5

*1 : All dimensions not shown are the same as those of the standard. When using a custom stroke length, the dimensions are the same as the longer standard stroke length.
*2 : Refer to pages 552 and 553 for RD, HD and protruding dimensions of the 2-color display (except for T2WH/V and T3WH/V), off-delay, AC magnetic field proof, T1H/V and T8H/V switches.

Dimensions: ø80

- Standard single rod STL-$^{M}_{B}$
- Corrosion proof STL-$^{M}_{B}$-M/M1

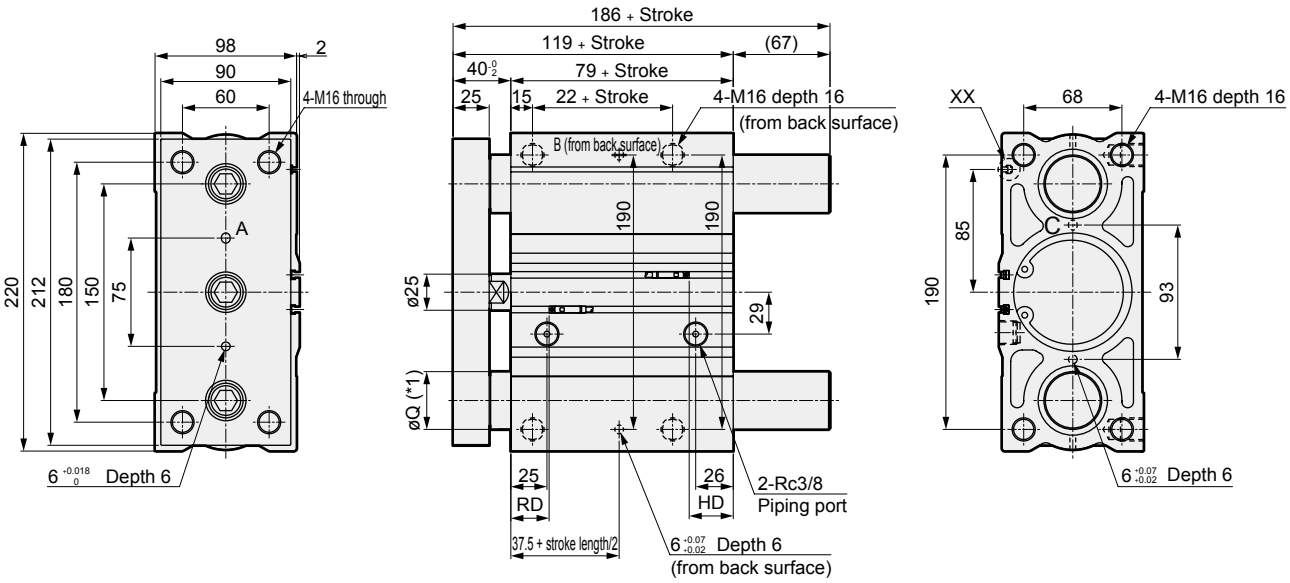

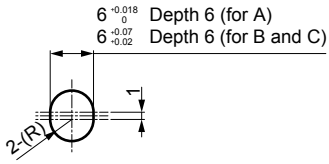

Slot dimensions for A, B and C

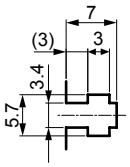

XX section details

Code	T0/T5/T2/T3		T2W/T3W	
Bore size (mm)	RD	HD	RD	HD
ø80	26.5	30.5	28	35.5

*1 : ø40 for M (metal bush bearing) and ø35 for B (ball bearing).
*2 : When using a custom stroke length, the dimensions are the same as the longer standard stroke length. The standard stroke length of ø80 can be selected from 75 to 400 mm in 25 mm increments.
*3 : Refer to pages 552 and 553 for RD, HD and protruding dimensions of the 2-color display (except for T2WH/V and T3WH/V), off-delay, AC magnetic field proof, T1H/V and T8H/V switches.

LCM
LCR
LCG
LCW
LCX
STM
STG
STS/STL
STR2
UCA2
ULK*
JSK/M2
JSG
JSC3/JSC4
USSD
UFCD
USC
UB
JSB3
LMB
LML
HCM
HCA
LBC
CAC4
UCAC2
CAC-N
UCAC-N
RCS2
RCC2
PCC
SHC
MCP
GLC
MFC
BBS
RRC
GRC
RV3*
NHS
HRL
LN
Hand
Chuk
MecHnd/Chuk
ShkAbs
FJ
FK
SpdContr
Ending

Dimensions: ø100

- Standard single rod STL-$^{M}_{B}$
- Corrosion proof STL-$^{M}_{B}$-M/M1
- Copper and PTFE free STL-$^{M}_{B}$ P6

[100 or less stroke length]

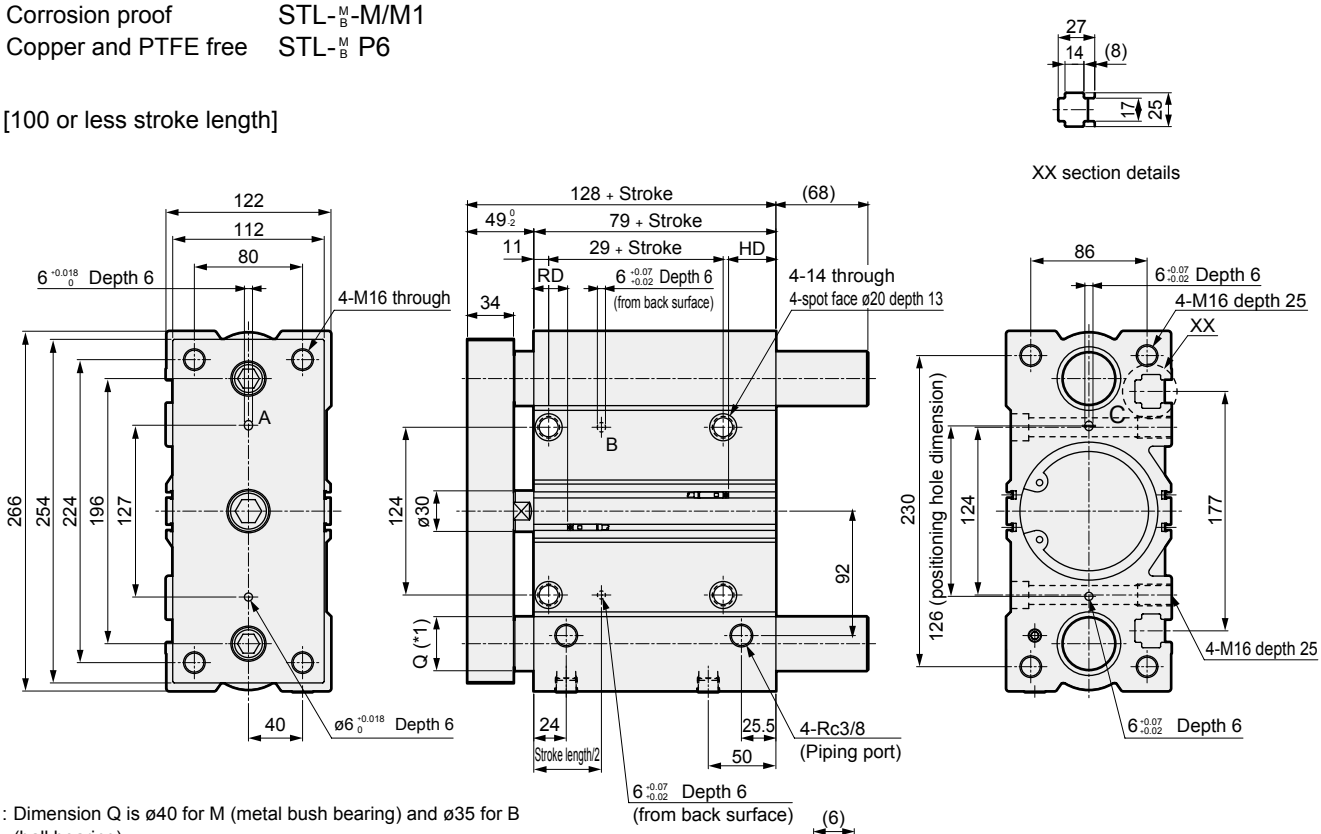

*1 : Dimension Q is ø40 for M (metal bush bearing) and ø35 for B (ball bearing).

*2 : Refer to pages 552 and 553 for RD, HD and protruding dimensions of the 2-color display (except for T2WH/V and T3WH/V), off-delay, AC magnetic field proof, T1H/V and T8H/V switches.

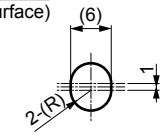

Slot dimensions for A, B and C

Code	T0/T5/T2/T3		T2W/T3W	
Bore size (mm)	RD	HD	RD	HD
ø100	25	35	27	37

[125 and over stroke length]

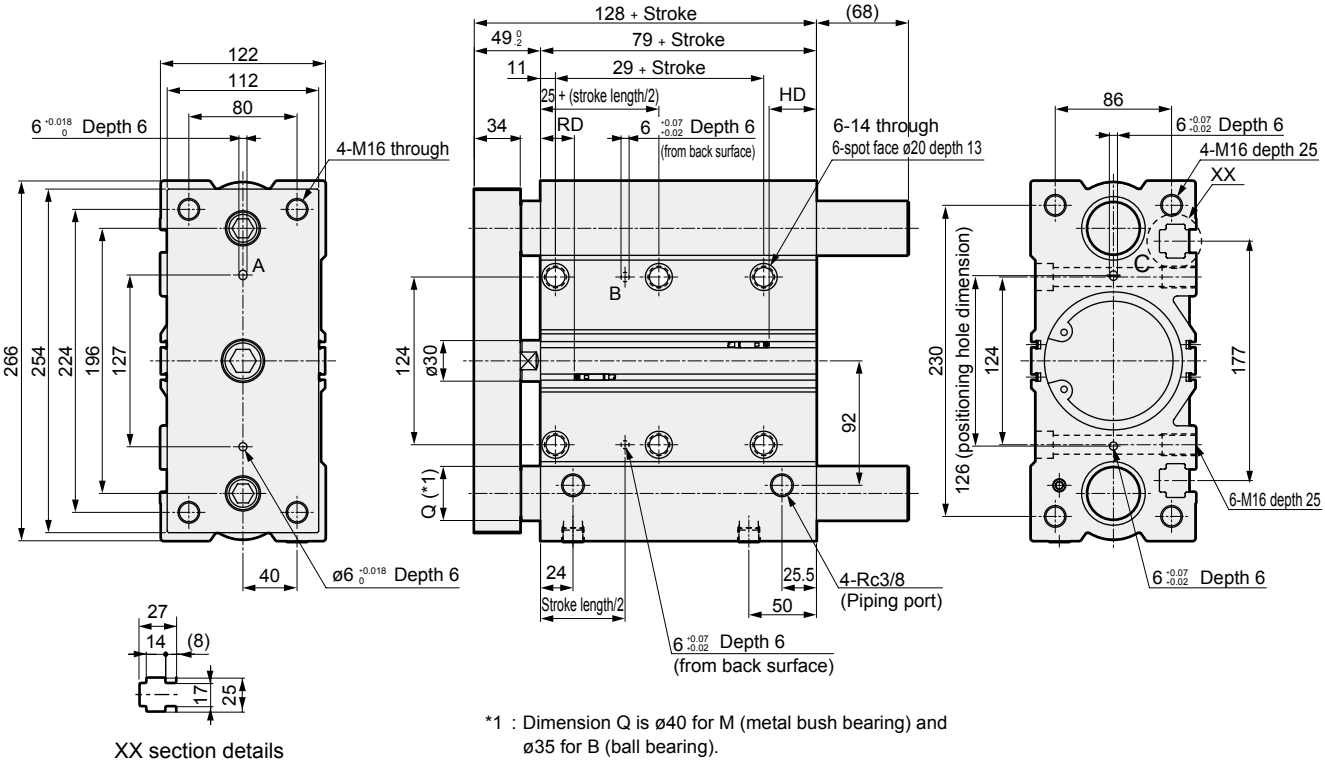

*1 : Dimension Q is ø40 for M (metal bush bearing) and ø35 for B (ball bearing).

MEMO

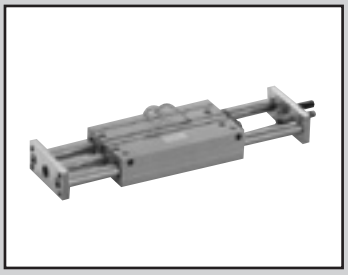

Guided cylinder Double acting/stroke adjustable

STS/STL-$^{M}_{B}$P Series

● Bore size: ø8/ø12/ø16/ø20/ø25/ø32
ø40/ø50/ø63/ø80

JIS symbol

RoHS CAD

Specifications

Item	STS-MP/BP STL-MP/BP									
Bore size mm	ø8	ø12	ø16	ø20	ø25	ø32	ø40	ø50	ø63	ø80
Actuation	Double acting/stroke adjustable									
Working fluid	Compressed air									
Max. working pressure MPa	1.0 (≈150 psi, 10 bar)									
Min. working pressure MPa	0.2 (≈29 psi, 2 bar)					0.15 (≈22 psi, 1.5 bar)				
Proof pressure MPa	1.6 (≈230 psi, 16 bar)									
Ambient temperature °C	-10 (14°F) to 60 (140°F) (no freezing)									
Port size	M5					Rc1/8		Rc1/4		Rc3/8
Stroke tolerance mm	+2.0 0									
Working piston speed mm/s	50 to 500								50 to 300	
Cushion	With rubber cushion, with shock absorber for push									
Adjustable stroke range mm	25									
Lubrication	Not required (use turbine oil class 1 ISO VG32 if necessary for lubrication)									
Allowable absorbed energy J	0.029	0.056	0.088	0.157	0.157	0.401	0.627	0.980	1.560	2.510

Stroke

● Short stroke STS

Bore size	Standard stroke (mm)	Max. stroke (mm)	Min. stroke (mm)	Min. stroke with switch (mm)
ø8	10,20,30,40,50	50	10	10
ø12				
ø16				
ø20	25,50		25	25 With one or two switches
ø25				
ø32				
ø40				
ø50				
ø63				
ø80	25,50,75,100	100		

● Long stroke STL

Bore size	Standard stroke (mm)	Max. stroke (mm)	Min. stroke (mm)	Min. stroke with switch (mm)
ø8	50,75,100,125,150 175,200	200	50	50 With one or two switches
ø12				
ø16				
ø20	50,75,100,125,150 175,200,225,250 275,300,325,350 375,400	400		
ø25				
ø32				
ø40				
ø50				
ø63				
ø80	75,100,125,150,175 200,225,250,275,300 325,350,375,400		75	75 With one or two switches

Switch specifications

● 1-color/2-color LED/for AC magnetic field proof

Item	Proximity 2-wire	Proximity 2-wire			Proximity 3-wire				Reed 2-wire							Proximity 2-wire
	T1H/ T1V	T2H/T2V/ T2JH/T2JV	T2YH/ T2YV	T2WH/ T2WV	T3H/ T3V	T3PH/ T3PV	T3YH/ T3YV	T3WH/ T3WV	T0H/T0V		T5H/T5V		T8H/T8V			T2YD(*4) T2YDT
Applications	For programmable controller, relay, compact solenoid valve	Dedicated for programmable controller			For programmable controller, relay				For programmable controller, relay		For programmable controller, relay, IC circuit (no indicator lamp), serial connection		For programmable controller, relay			For programmable controller
Output method	-				NPN output	PNP output	NPN output	NPN output	-							
Pwr. supp. V.	-				10 to 28 VDC				-							
Load voltage	85 to 265 VAC	10 to 30 VDC		24 VDC ±10%	30 VDC or less				12/24 VDC	100/110 VAC	5/12/24 VDC	100/110 VAC	12/24 VDC	110 VAC	220 VAC	24 VDC ±10%
Load current	5 to 100mA	5 to 20 mA (*3)			100 mA or less		50 mA or less		5 to 50mA	7 to 20mA	50 mA or less	20 mA or less	5 to 50mA	7 to 20mA	7 to 10mA	5 to 20mA
Indicator lamp	LED (Lit when ON)	LED (Lit when ON)	Red/green LED (Lit when ON)	Red/green LED (Lit when ON)	LED (Lit when ON)	Yellow LED (Lit when ON)	Red/green LED (Lit when ON)	Red/green LED (Lit when ON)	LED (Lit when ON)		No indicator lamp		LED (Lit when ON)			Red/green LED (Lit when ON)
Leakage current	1 mA or less with 100 VAC, 2 mA or less with 200 VAC	1 mA or less			10 μA or less				0mA							1 mA or less
Weight g	1 m: 33 3 m: 87 5 m: 142	1 m: 18 3 m: 49 5 m: 80	1 m: 33 3 m: 87 5 m: 142	1 m: 18 3 m: 49 5 m: 80	1 m: 18 3 m: 49 5 m: 80		1 m: 33 3 m: 87 5 m: 142	1 m: 18 3 m: 49 5 m: 80	1 m: 18 3 m: 49 5 m: 80				1 m: 33 3 m: 87 5 m: 142			1 m: 61 3 m: 166 5 m: 272

*1: Refer to Ending Page 1 for detailed switch specifications and dimensions.
*2: Switches other than the above models, such as switches with connectors, are also available. Refer to Ending Page 1.
*3: The max. load current is 20 mA at 25°C. The current is lower than 20 mA if the operating ambient temperature around the switch is higher than 25˚C. (5 to 10 mA at 60°C)
*4: AC magnetic field proof switch (T2YD/T2YDT) cannot be used in DC magnetic fields.

Theoretical thrust table

(Unit: N)

Bore size (mm)	Operating direction	Working pressure MPa 0.15	0.2	0.3	0.4	0.5	0.6	0.7	0.8	0.9	1.0
ø8	Push	-	10.1	15.1	20.1	25.1	30.2	35.2	40.2	45.2	50.3
	Pull	-	7.54	11.3	15.1	18.8	22.6	26.4	30.2	33.9	37.7
ø12	Push	-	22.6	33.9	45.2	56.5	67.9	79.2	90.5	1.02×10^2	1.13×10^2
	Pull	-	17.0	25.4	33.9	42.4	50.9	59.4	67.9	76.3	84.8
ø16	Push	-	40.2	60.3	80.4	1.01×10^2	1.21×10^2	1.41×10^2	1.61×10^2	1.81×10^2	2.01×10^2
	Pull	-	30.2	45.2	60.3	75.4	90.5	1.06×10^2	1.21×10^2	1.36×10^2	1.51×10^2
ø20	Push	-	62.8	94.2	1.26×10^2	1.57×10^2	1.88×10^2	2.20×10^2	2.51×10^2	2.83×10^2	3.14×10^2
	Pull	-	47.1	70.7	94.2	1.18×10^2	1.41×10^2	1.65×10^2	1.88×10^2	2.12×10^2	2.36×10^2
ø25	Push	-	98.2	1.47×10^2	1.96×10^2	2.45×10^2	2.95×10^2	3.44×10^2	3.93×10^2	4.42×10^2	4.91×10^2
	Pull	-	75.6	1.13×10^2	1.51×10^2	1.89×10^2	2.27×10^2	2.64×10^2	3.02×10^2	3.40×10^2	3.78×10^2
ø32	Push	1.21×10^2	1.61×10^2	2.41×10^2	3.22×10^2	4.02×10^2	4.83×10^2	5.63×10^2	6.43×10^2	7.24×10^2	8.04×10^2
	Pull	90.5	1.21×10^2	1.81×10^2	2.41×10^2	3.02×10^2	3.62×10^2	4.22×10^2	4.83×10^2	5.43×10^2	6.03×10^2
ø40	Push	1.88×10^2	2.51×10^2	3.77×10^2	5.03×10^2	6.28×10^2	7.54×10^2	8.80×10^2	1.01×10^3	1.13×10^3	1.26×10^3
	Pull	1.58×10^2	2.11×10^2	3.17×10^2	4.22×10^2	5.28×10^2	6.33×10^2	7.39×10^2	8.44×10^2	9.50×10^2	1.06×10^3
ø50	Push	2.95×10^2	3.93×10^2	5.89×10^2	7.85×10^2	9.82×10^2	1.18×10^3	1.37×10^3	1.57×10^3	1.77×10^3	1.96×10^3
	Pull	2.47×10^2	3.30×10^2	4.95×10^2	6.60×10^2	8.25×10^2	9.90×10^2	1.15×10^3	1.32×10^3	1.48×10^3	1.65×10^3
ø63	Push	4.68×10^2	6.23×10^2	9.35×10^2	1.25×10^3	1.56×10^3	1.87×10^3	2.18×10^3	2.49×10^3	2.81×10^3	3.12×10^3
	Pull	4.20×10^2	5.61×10^2	8.41×10^2	1.12×10^3	1.40×10^3	1.68×10^3	1.96×10^3	2.24×10^3	2.52×10^3	2.80×10^3
ø80	Push	7.54×10^2	1.01×10^3	1.51×10^3	2.01×10^3	2.51×10^3	3.02×10^3	3.52×10^3	4.02×10^3	4.52×10^3	5.03×10^3
	Pull	6.80×10^2	9.07×10^2	1.36×10^3	1.81×10^3	2.27×10^3	2.72×10^3	3.17×10^3	3.63×10^3	4.08×10^3	4.54×10^3

For cylinder weight, refer to pages 558 to 561.

LCM
LCR
LCG
LCW
LCX
STM
STG
STS/STL
STR2
UCA2
ULK*
JSK/M2
JSG
JSC3/JSC4
USSD
UFCD
USC
UB
JSB3
LMB
LML
HCM
HCA
LBC
CAC4
UCAC2
CAC-N
UCAC-N
RCS2
RCC2
PCC
SHC
MCP
GLC
MFC
BBS
RRC
GRC
RV3*
NHS
HRL
LN
Hand
Chuk
MecHnd/Chuk
ShkAbs
FJ
FK
SpdContr
Ending

How to order

● Short stroke

Without switch (built-in magnet for switch)

STS - M P - 8 ◯ - 10 ———— F

With switch (built-in magnet for switch)

STS - M P - 8 ◯ - 10 - T2H - R - F

● Long stroke

Without switch (built-in magnet for switch)

STL - M P - 8 ◯ - 50 ———— F

With switch (built-in magnet for switch)

STL - M P - 8 ◯ - 50 - T2H - R - F

Model No.

Ⓐ Bearing

Ⓑ Bore size

Ⓒ Port thread

Ⓓ Stroke

Ⓔ Switch model No.
*1 *3 *4

For the 2-color LED, T1H/V, T8H/V and AC magnetic field proof switches for ø40 and over, insert "L1" with "-" between Ⓐ and Ⓑ.
(Example) STS-MP-L1-63-50-T2YH3-D-F

For ø80, the 2-color LED, T1H/V, T8H/V and AC magnetic field proof switches cannot be retrofitted on a previously purchased standard product.
In this case, order the model No. with "L1" inserted between Ⓐ and Ⓑ.
(Example) STS-MP-L1-80-50-F

Ⓕ Switch quantity

Ⓖ Option

Code	Description
Ⓐ Bearing	
M	Metal bush bearing
B	Ball bearing
Ⓑ Bore size (mm)	
8	ø8
12	ø12
16	ø16
20	ø20
25	ø25
32	ø32
40	ø40
50	ø50
63	ø63
80	ø80
Ⓒ Port thread	
Blank	M5 (ø8 to ø25)
	Rc thread (ø32 to ø80)
NN	NPT thread (ø32 and over) made-to-order product
GN	G thread (ø32 and over) made-to-order product
Ⓓ Stroke (mm)	
Refer to the stroke table on the following page.	

Ⓔ Switch model No.

Straight lead wire	L-shaped lead wire	Voltage AC	Voltage DC	Contact	Indicator	Lead wire
T0H*	T0V*	●	●	Reed	1-color LED	2-wire
T5H*	T5V*	●	●		No indicator lamp	
T8H*	T8V*	●	●		1-color LED	
T1H*	T1V*	●		Proximity		
T2H*	T2V*		●			
T3H*	T3V*		●			3-wire
T3PH*	T3PV*		●		1-color LED	3-wire
T2WH*	T2WV*		●		2-color LED	2-wire
T2YH*	T2YV*		●			2-wire
T3WH*	T3WV*		●			3-wire
T3YH*	T3YV*		●			3-wire
T2JH*	T2JV*		●		1-color LED off-delay	2-wire
T2YD*	-		●		2-color LED for AC magnetic field	2-wire
T2YDT*	-		●			

* Lead wire length	
Blank	1 m (standard)
3	3 m (option)
5	5 m (option)

Ⓕ Switch quantity	
R	1 on rod side
H	1 on head side
D	2
T	3

Ⓖ Option	
F	End plate material: steel

⚠ Precautions for model No. selection

*1 : Switches other than Ⓔ Switch model No. are also available. (Made-to-order product)
Refer to Ending Page 1 for details.
*2 : Refer to pages 444 to 447 for combinations of variations/options.
*3 : T8H/V switch cannot be installed on ø8 to ø16.
*4 : Switches are shipped with the product. Contact CKD if assembling before shipment is necessary.

[Example of model No.]

STS-MP-8-30-T0H-R-F

Model: Guided cylinder, short stroke, standard/stroke adjustable

Ⓐ Bearing : Metal bush bearing
Ⓑ Bore size : ø8 mm
Ⓒ Port thread : M5
Ⓓ Stroke : 30 mm
Ⓔ Switch model No. : Reed T0H, lead wire length 1 m
Ⓕ Switch quantity : 1 on rod side
Ⓖ Option : End plate material: steel

Ⓓ Stroke

Series	Stroke (mm)		Applicable bore size									
			ø8	ø12	ø16	ø20	ø25	ø32	ø40	ø50	ø63	ø80
STS	Standard stroke	10	●	●	●							
		20	●	●	●							
		25				●	●	●	●	●	●	●
		30	●	●	●							
		40	●	●	●							
		50	●	●	●	●	●	●	●	●	●	●
		75										●
		100										●
	Min. stroke		5									
STL	Standard stroke	50	●	●	●	●	●	●	●	●	●	
		75	●	●	●	●	●	●	●	●	●	●
		100	●	●	●	●	●	●	●	●	●	●
		125	●	●	●	●	●	●	●	●	●	●
		150	●	●	●	●	●	●	●	●	●	●
		175	●	●	●	●	●	●	●	●	●	●
		200	●	●	●	●	●	●	●	●	●	●
		225				●	●	●	●	●	●	●
		250				●	●	●	●	●	●	●
		275				●	●	●	●	●	●	●
		300				●	●	●	●	●	●	●
		325				●	●	●	●	●	●	●
		350				●	●	●	●	●	●	●
		375				●	●	●	●	●	●	●
		400				●	●	●	●	●	●	●
	Min. stroke		50									75

Note: Custom stroke is not available. Adjust the stroke with the stroke adjustment mechanism.

How to order switch

SW - T0V

Switch model No.
(Item Ⓔ on page 472)

Internal structure and parts list

● Stroke adjustable

STS-$^{M}_{B}$P

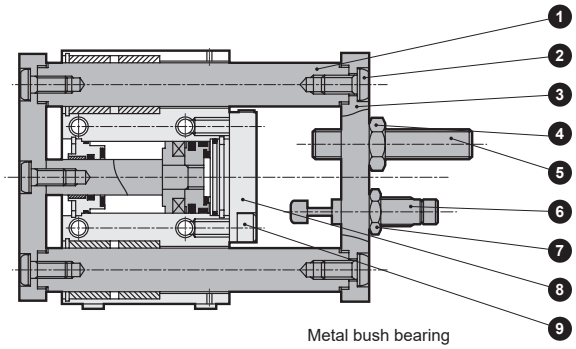

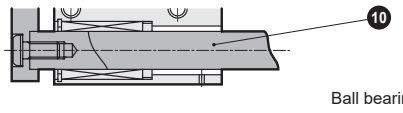

STL-$^{M}_{B}$P

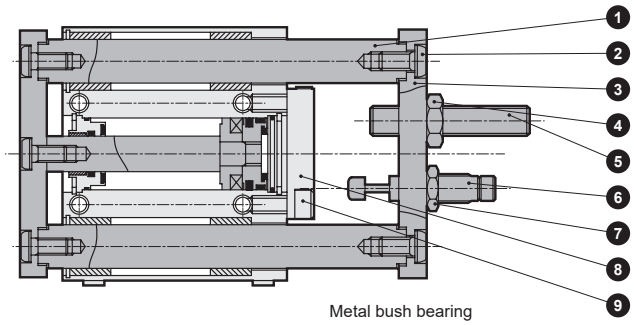

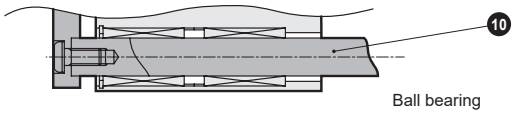

Parts list

(Parts not listed below are the same as those of the standard. Refer to pages 453 to 456.)

No.	Part name	Material	Remarks
ST$^{S}_{L}$-$^{M}_{B}$P (Stroke adjustable)			
1	Guide rod	Steel	Industrial chrome plating
2	Hexagon socket button head bolt	Steel	Zinc chromate
3	End plate (H)	Aluminum alloy	Alumite
4	Hexagon nut	Steel	Black finish
5	Hexagon socket set screw	Steel	Black finish
6	Shock absorber	-	
7	Hexagon nut	Steel	Zinc chromate
8	Stopper plate	Steel	Zinc chromate
9	Hexagon socket head cap screw	Steel	Zinc chromate
10	Guide rod	Steel	Industrial chrome plating

Repair parts list

The repair parts list is common with the double acting/single rod. Refer to page 453 for STS Series and page 456 for STL Series.

LCM
LCR
LCG
LCW
LCX
STM
STG
STS/STL
STR2
UCA2
ULK*
JSK/M2
JSG
JSC3/JSC4
USSD
UFCD
USC
UB
JSB3
LMB
LML
HCM
HCA
LBC
CAC4
UCAC2
CAC-N
UCAC-N
RCS2
RCC2
PCC
SHC
MCP
GLC
MFC
BBS
RRC
GRC
RV3*
NHS
HRL
LN
Hand
Chuk
MecHnd/Chuk
ShkAbs
FJ
FK
SpdContr
Ending

Dimensions

● Stroke adjustable (Dimensions not listed below are the same as those of the double acting/single rod.)

ø8/ø12/ø16

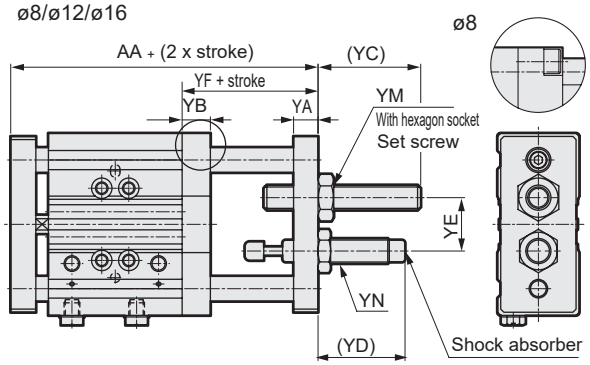

ø20/ø25

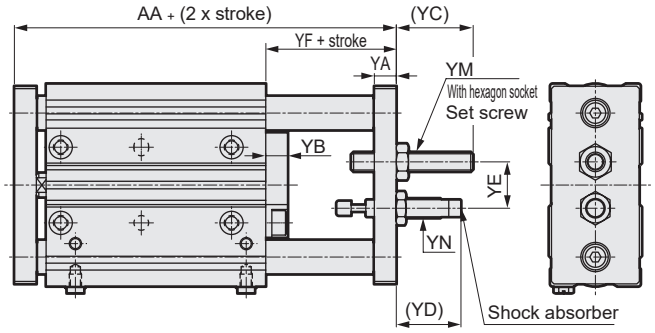

ø32/ø40/ø50/ø63

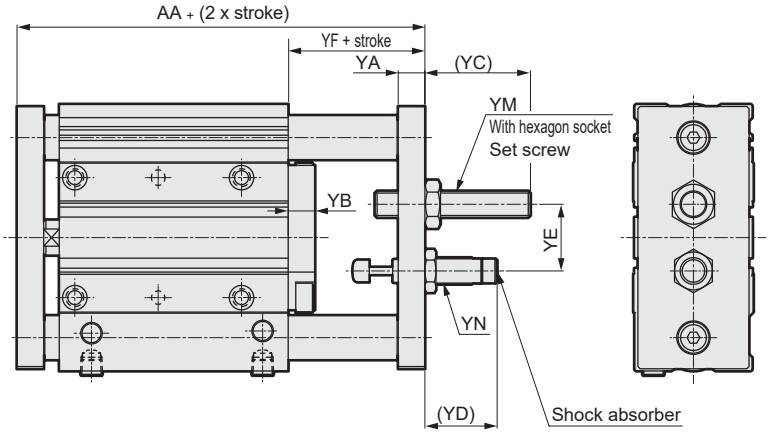

ø80

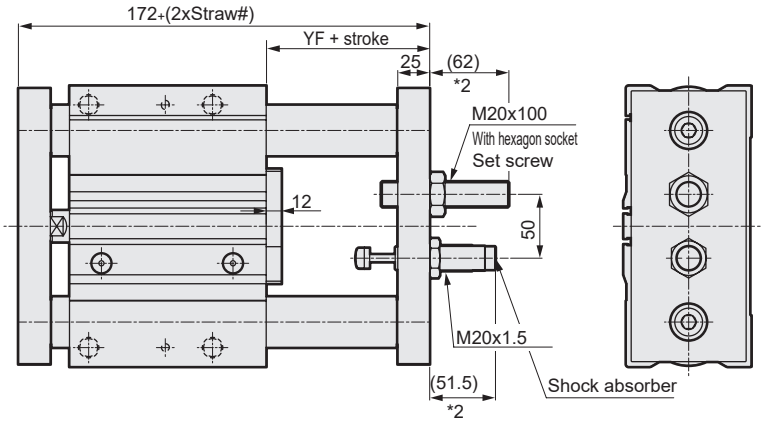

Code / Bore size (mm)	AA	YA	YB	YC *2	YD *2	YE	YF	YM	YN	Shock absorber model No.
ø8	67.5	8	9	32.5	27.5	17	27.5	M8X50	M8X0.75	NCK-00-0.3-C
ø12	71.5	8	9	32.5	27.5	17	27.5	M8X50	M8X0.75	NCK-00-0.3-C
ø16	73.5	9	9	31.5	26.5	17	28.5	M8X50	M8X0.75	NCK-00-0.3-C
ø20	81.5	9	9	31.5	26.5	19	28.5	M8X50	M8X0.75	NCK-00-0.3-C
ø25	84	9	9	30	29	19	30	M8X50	M10X1	NCK-00-0.7-C
ø32	104.5	12	12	47.5	32.5	30	36.5	M12X70	M12X1	NCK-00-1.2-C
ø40	108.5	12	12	47.5	32.5	30	36.5	M12X70	M12X1	NCK-00-1.2-C
ø50	124	16	16	51	52	40	47	M16X80	M14X1.5	NCK-00-2.6-C
ø63	130	16	16	51	52	40	47	M16X80	M14X1.5	NCK-00-2.6-C
ø80	172	25	12	62	51.5	50	53	M20X100	M20X1.5	NCK-00-7.0-C

*1: Custom stroke is not available.
*2: YC and YD are dimensions at shipment.

Dimensions

● Stroke adjustable (Dimensions not listed below are the same as those of the double acting/single rod.)

ø8/ø12/ø16

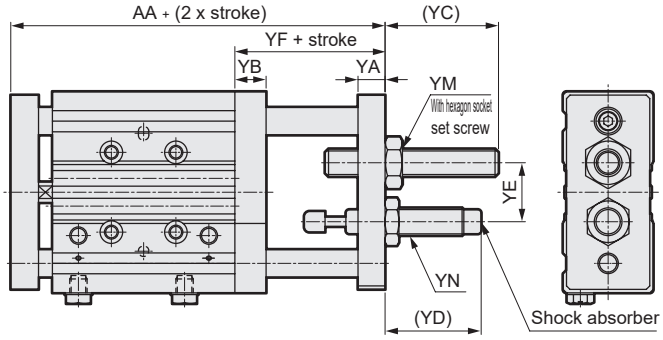

ø20/ø25

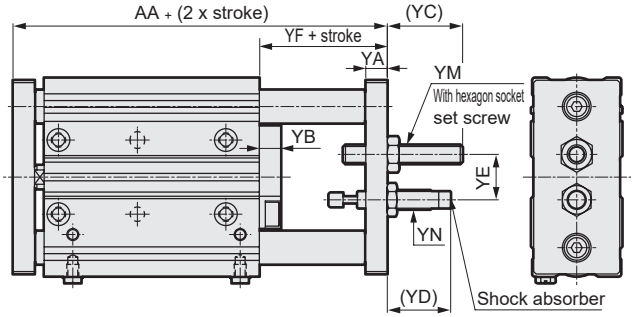

ø32/ø40/ø50/ø63

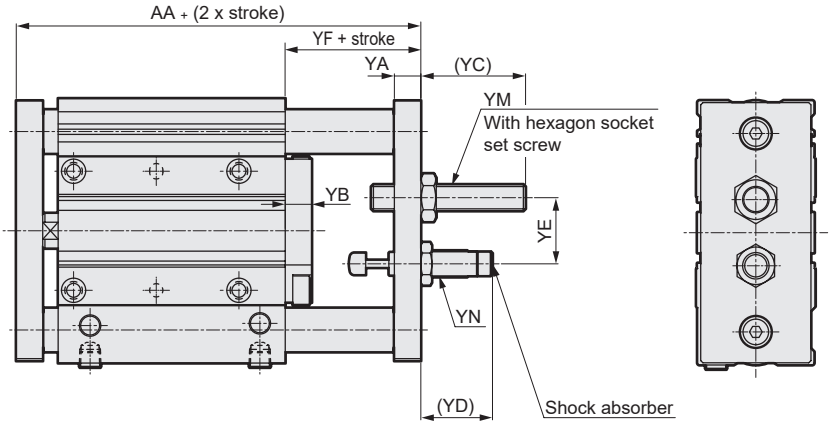

ø80

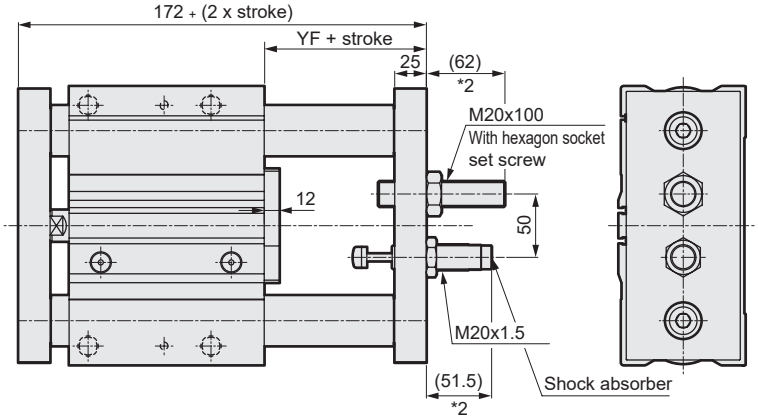

Code / Bore size (mm)	AA	YA	YB	YC *2	YD *2	YE	YF	YM	YN	Shock absorber model No.
ø8	67.5	8	9	32.5	27.5	17	27.5	M8X50	M8X0.75	NCK-00-0.3-C
ø12	71.5	8	9	32.5	27.5	17	27.5	M8X50	M8X0.75	NCK-00-0.3-C
ø16	73.5	9	9	31.5	26.5	17	28.5	M8X50	M8X0.75	NCK-00-0.3-C
ø20	81.5	9	9	31.5	26.5	19	28.5	M8X50	M8X0.75	NCK-00-0.3-C
ø25	84	9	9	30	29	19	30	M8X50	M10X1	NCK-00-0.7-C
ø32	104.5	12	12	47.5	32.5	30	36.5	M12X70	M12X1	NCK-00-1.2-C
ø40	108.5	12	12	47.5	32.5	30	36.5	M12X70	M12X1	NCK-00-1.2-C
ø50	124	16	16	51	52	40	47	M16X80	M14X1.5	NCK-00-2.6-C
ø63	130	16	16	51	52	40	47	M16X80	M14X1.5	NCK-00-2.6-C
ø80	172	25	12	62	51.5	50	53	M20X100	M20X1.5	NCK-00-7.0-C

*1 : Custom stroke is not available.
*2 : YC and YD are dimensions at shipment.

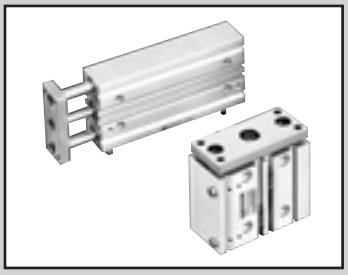

Guided cylinder Double acting/heat resistant

STS/STL-$^{M}_{B}$T Series

● Bore size: ø12/ø16/ø20/ø25/ø32/ø40
ø50/ø63/ø80

JIS symbol

RoHS CAD

Specifications

Item	STS-MT/BT STL-MT/BT								
Bore size mm	ø12	ø16	ø20	ø25	ø32	ø40	ø50	ø63	ø80
Actuation	Double acting/heat resistant								
Working fluid	Compressed air								
Max. working pressure MPa	1.0 (≈150 psi, 10 bar)								
Min. working pressure MPa	0.2 (≈29 psi, 2 bar)				0.15 (≈22 psi, 1.5 bar)				
Proof pressure MPa	1.6 (≈230 psi, 16 bar)								
Ambient temperature °C	5 (41°F) to 120 (248°F)								
Port size	M5				Rc1/8		Rc1/4		Rc3/8
Stroke tolerance mm	+2.0 0								
Working piston speed mm/s	50 to 500							50 to 300	
Cushion	None								
Lubrication	Not required (Periodically apply additional heat-resistant grease.)								
Allowable absorbed energy J	0.004	0.01	0.016	0.021	0.025	0.092	0.1	0.12	0.27

Stroke

● Short stroke STS

Bore size	Standard stroke (mm)	Max. stroke (mm)	Min. stroke (mm)
ø12	10,20,30,40,50	50	5
ø16			
ø20	25,50		
ø25			
ø32			
ø40			
ø50			
ø63			
ø80	25,50,75,100	100	

● Long stroke STL

Bore size	Standard stroke (mm)	Max. stroke (mm)	Min. stroke (mm)
ø12	50,75,100,125,150 175,200	200	50
ø16			
ø20	50,75,100,125,150 175,200,225,250 275,300,325,350 375,400	400	30
ø25			
ø32			
ø40			
ø50			
ø63			
ø80	75,100,125,150,175 200,225,250,275,300 325,350,375,400		55

Note: The custom stroke is available in 5 mm increments.
However, the total length is the same as that of the next longer standard stroke.

Theoretical thrust table

(Unit: N)

Bore size (mm)	Operating direction	Working pressure MPa									
		0.15	0.2	0.3	0.4	0.5	0.6	0.7	0.8	0.9	1.0
ø12	Push	-	22.6	33.9	45.2	56.5	67.9	79.2	90.5	1.02×10^{2}	1.13×10^{2}
	Pull	-	17.0	25.4	33.9	42.4	50.9	59.4	67.9	76.3	84.8
ø16	Push	-	40.2	60.3	80.4	1.01×10^{2}	1.21×10^{2}	1.41×10^{2}	1.61×10^{2}	1.81×10^{2}	2.01×10^{2}
	Pull	-	30.2	45.2	60.3	75.4	90.5	1.06×10^{2}	1.21×10^{2}	1.36×10^{2}	1.51×10^{2}
ø20	Push	-	62.8	94.2	1.26×10^{2}	1.57×10^{2}	1.88×10^{2}	2.20×10^{2}	2.51×10^{2}	2.83×10^{2}	3.14×10^{2}
	Pull	-	47.1	70.7	94.2	1.18×10^{2}	1.41×10^{2}	1.65×10^{2}	1.88×10^{2}	2.12×10^{2}	2.36×10^{2}
ø25	Push	-	98.2	1.47×10^{2}	1.96×10^{2}	2.45×10^{2}	2.95×10^{2}	3.44×10^{2}	3.93×10^{2}	4.42×10^{2}	4.91×10^{2}
	Pull	-	75.6	1.13×10^{2}	1.51×10^{2}	1.89×10^{2}	2.27×10^{2}	2.64×10^{2}	3.02×10^{2}	3.40×10^{2}	3.78×10^{2}
ø32	Push	1.21×10^{2}	1.61×10^{2}	2.41×10^{2}	3.22×10^{2}	4.02×10^{2}	4.83×10^{2}	5.63×10^{2}	6.43×10^{2}	7.24×10^{2}	8.04×10^{2}
	Pull	90.5	1.21×10^{2}	1.81×10^{2}	2.41×10^{2}	3.02×10^{2}	3.62×10^{2}	4.22×10^{2}	4.83×10^{2}	5.43×10^{2}	6.03×10^{2}
ø40	Push	1.88×10^{2}	2.51×10^{2}	3.77×10^{2}	5.03×10^{2}	6.28×10^{2}	7.54×10^{2}	8.80×10^{2}	1.01×10^{3}	1.13×10^{3}	1.26×10^{3}
	Pull	1.58×10^{2}	2.11×10^{2}	3.17×10^{2}	4.22×10^{2}	5.28×10^{2}	6.33×10^{2}	7.39×10^{2}	8.44×10^{2}	9.50×10^{2}	1.06×10^{3}
ø50	Push	2.95×10^{2}	3.93×10^{2}	5.89×10^{2}	7.85×10^{2}	9.82×10^{2}	1.18×10^{3}	1.37×10^{3}	1.57×10^{3}	1.77×10^{3}	1.96×10^{3}
	Pull	2.47×10^{2}	3.30×10^{2}	4.95×10^{2}	6.60×10^{2}	8.25×10^{2}	9.90×10^{2}	1.15×10^{3}	1.32×10^{3}	1.48×10^{3}	1.65×10^{3}
ø63	Push	4.68×10^{2}	6.23×10^{2}	9.35×10^{2}	1.25×10^{3}	1.56×10^{3}	1.87×10^{3}	2.18×10^{3}	2.49×10^{3}	2.81×10^{3}	3.12×10^{3}
	Pull	4.20×10^{2}	5.61×10^{2}	8.41×10^{2}	1.12×10^{3}	1.40×10^{3}	1.68×10^{3}	1.96×10^{3}	2.24×10^{3}	2.52×10^{3}	2.80×10^{3}
ø80	Push	7.54×10^{2}	1.01×10^{3}	1.51×10^{3}	2.01×10^{3}	2.51×10^{3}	3.02×10^{3}	3.52×10^{3}	4.02×10^{3}	4.52×10^{3}	5.03×10^{3}
	Pull	6.80×10^{2}	9.07×10^{2}	1.36×10^{3}	1.81×10^{3}	2.27×10^{3}	2.72×10^{3}	3.17×10^{3}	3.63×10^{3}	4.08×10^{3}	4.54×10^{3}

For cylinder weight, refer to pages 558 to 561.

How to order

Short stroke (switch not mountable)

STS - M T - 12 ◯ - 10 - F

Long stroke (switch not mountable)

STL - M T - 12 ◯ - 50 - F

Model No.

Ⓐ Bearing

Ⓑ Bore size

Ⓒ Port thread

Ⓓ Stroke

Ⓔ Option

■ The custom stroke is available in 5 mm increments.
However, the total length is the same as that of the next longer standard stroke.

Code	Description
Ⓐ Bearing	
M	Metal bush bearing
B	Ball bearing (not available for ø20 and ø25)
Ⓑ Bore size (mm)	
12	ø12
16	ø16
20	ø20
25	ø25
32	ø32
40	ø40
50	ø50
63	ø63
80	ø80
Ⓒ Port thread	
Blank	M5 (ø12 to ø25)
	Rc thread (ø32 to ø80)
NN	NPT thread (ø32 and over) made-to-order product
GN	G thread (ø32 and over) made-to-order product
Ⓓ Stroke (mm)	
Refer to the stroke table below.	
Ⓔ Option	
F	End plate material: steel
M	Corrosion proof (Piston rod and guide rod material: SUS) (made-to-order product) *2
M1	Corrosion proof (Piston rod, guide rod and end plate material: SUS) (made-to-order product) *2

⚠ Precautions for model No. selection

*1 : Refer to pages 444 to 447 for combinations of variations/options.
*2 : Ball bearing (B) only.
Refer to page 458 for material details.

[Example of model No.]

STS-MT-12-30-F

Model: Guided cylinder, short stroke, standard/heat resistance

Ⓐ Bearing : Metal bush bearing
Ⓑ Bore size : ø12 mm
Ⓒ Port thread : M5
Ⓓ Stroke : 30 mm
Ⓔ Option : End plate material: steel

Ⓓ Stroke

Series	Stroke (mm)		Applicable bore size								
			ø12	ø16	ø20	ø25	ø32	ø40	ø50	ø63	ø80
STS	Standard stroke	10	●	●							
		20	●	●							
		25			●	●	●	●	●	●	●
		30	●	●							
		40	●	●							
		50	●	●	●	●	●	●	●	●	●
		75									●
		100									●
	Min. stroke *1		5								
	Custom stroke *1, 2		In 5 mm increments								
STL	Standard stroke	50	●	●	●	●	●	●	●	●	
		75	●	●	●	●	●	●	●	●	●
		100	●	●	●	●	●	●	●	●	●
		125	●	●	●	●	●	●	●	●	●
		150	●	●	●	●	●	●	●	●	●
		175	●	●	●	●	●	●	●	●	●
		200	●	●	●	●	●	●	●	●	●
		225			●	●	●	●	●	●	●
		250			●	●	●	●	●	●	●
		275			●	●	●	●	●	●	●
		300			●	●	●	●	●	●	●
		325			●	●	●	●	●	●	●
		350			●	●	●	●	●	●	●
		375			●	●	●	●	●	●	●
		400			●	●	●	●	●	●	●
	Min. stroke *1		50		30						55
	Custom stroke *1, 2		In 5 mm increments								

*1 : The total dimensions are the same as the longer standard stroke.
*2 : Special total length for custom stroke can be provided when a custom stroke is used. (Made to order)

LCM
LCR
LCG
LCW
LCX
STM
STG
STS/STL
STR2
UCA2
ULK*
JSK/M2
JSG
JSC3/JSC4
USSD
UFCD
USC
UB
JSB3
LMB
LML
HCM
HCA
LBC
CAC4
UCAC2
CAC-N
UCAC-N
RCS2
RCC2
PCC
SHC
MCP
GLC
MFC
BBS
RRC
GRC
RV3*
NHS
HRL
LN
Hand
Chuk
MecHnd/Chuk
ShkAbs
FJ
FK
SpdContr
Ending

Internal structure and parts list

● Heat resistance

STS-$^{M}_{B}$T

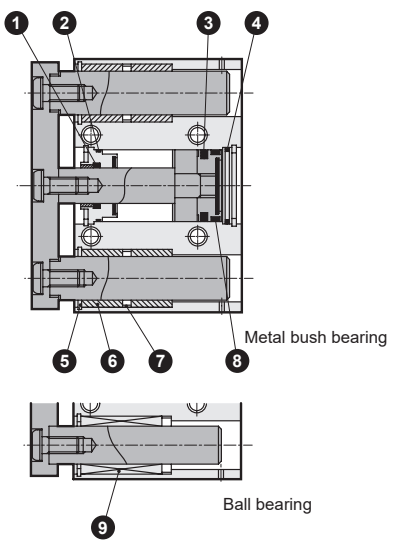

STL-$^{M}_{B}$T

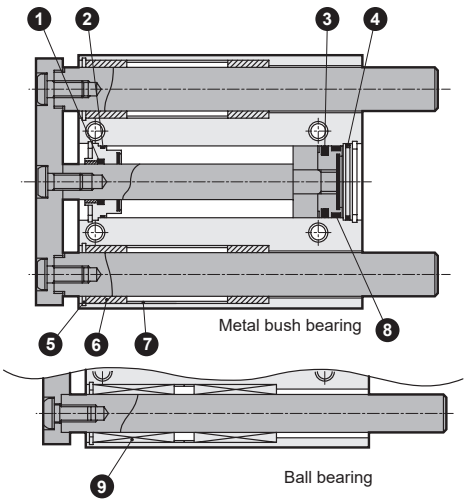

*1: Ball bearing is not available for the heat resistant ø20 and ø25.

Parts list (Dimensions other than those listed below are the same as those of double acting/standard single rod. Refer to pages 453 to 457.)

No.	Part name	Material	Remarks
ST$^{S}_{L}$-$^{M}_{B}$T (heat resistance)			
1	Rod packing	Fluoro rubber	
2	Metal gasket	Fluoro rubber	
3	Piston packing	Fluoro rubber	
4	O-ring	Fluoro rubber	
5	Round R type snap ring	Steel	Black finish
6	Metal	Bearing with solid lubricant	
7	Collar	Aluminum alloy	
8	Wear ring	Tetrafluoroethylene resin (ø12, ø16) Special resin (ø20 to ø80)	
9	Ball bush		

Repair parts list

● ST$^{S}_{L}$-$^{M}_{B}$T (heat resistance)

Bore size (mm)	Kit No.	Repair parts No.
ø12	STS-T-12K	
ø16	STS-T-16K	
ø20	STS-T-20K	
ø25	STS-T-25K	1 2 3
ø32	STS-T-32K	
ø40	STS-T-40K	4 8
ø50	STS-T-50K	
ø63	STS-T-63K	
ø80	STS-T-80K	

Note: Specify the kit No. when placing an order.

Dimensions

Same as STS/STL Series (double acting/single rod). Refer to the pages below.

STS Series : Page 459 (ø8 to ø16), page 460 (ø20 and ø25), page 461 (ø32 to ø63) and page 462 (ø80)
STL Series : Page 464 (ø8 to ø16), page 465 (ø20 and ø25), page 466 (ø32 to ø63) and page 467 (ø80)

MEMO

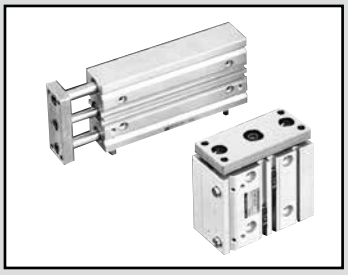

Guided cylinder Double acting/packing seal material fluoro rubber

STS/STL-$^{M}_{B}$T2 Series

● Bore size: ø12/ø16/ø20/ø25/ø32/ø40/ø50/ø63/ø80

JIS symbol

RoHS CAD

Specifications

Item	STS-MT2, BT2 STL-MT2, BT2								
Bore size mm	ø12	ø16	ø20	ø25	ø32	ø40	ø50	ø63	ø80
Actuation	Double acting/packing material fluoro rubber								
Working fluid	Compressed air								
Max. working pressure MPa	1.0 (≈150 psi, 10 bar)								
Min. working pressure MPa	0.15 (≈22 psi, 1.5 bar)				0.1 (≈15 psi, 1 bar)				
Proof pressure MPa	1.6 (≈230 psi, 16 bar)								
Ambient temperature °C	-10 (14°F) to 60 (140°F) (no freezing)								
Port size	M5				Rc1/8		Rc1/4		Rc3/8
Stroke tolerance mm	+2.0 0								
Working piston speed mm/s	50 to 500							50 to 300	
Cushion	With rubber cushion								
Lubrication	Not required (use turbine oil class 1 ISO VG32 if necessary for lubrication)								
Allowable absorbed energy J	0.056	0.088	0.157	0.157	0.401	0.627	0.980	1.560	2.510

Stroke length

● Short stroke STS

Bore size	Stroke length (mm)	Max. stroke length (mm)	Min. stroke length (mm)	Min. stroke with switch (mm)
ø12	10,20,30,40,50	50	5	5 With one or two switches
ø16				
ø20	25,50			
ø25				
ø32				
ø40				
ø50				
ø63				
ø80	25,50,75,100	100		

● Long stroke length STL

Bore size	Stroke length (mm)	Max. stroke length (mm)	Min. stroke length (mm)	Min. stroke with switch (mm)
ø12	50,75,100,125,150 175,200	200	50	50 With one or two switches
ø16				
ø20	50,75,100,125,150 175,200,225,250 275,300,325,350 375,400	400	30	30 With one or two switches
ø25				
ø32				
ø40				
ø50				
ø63				
ø80	75,100,125,150,175 200,225,250,275,300 325,350,375,400		55	55 With one or two switches

Note: The custom stroke length is available in 5 mm increments.
However, the total length is the same as that of the next longer standard stroke length.

Switch specifications

● 1-color/2-color display/for AC magnetic field proof

Item	Proximity 2-wire	Proximity 2-wire			Proximity 3-wire				Reed 2-wire							Proximity 2-wire
	T1H/ T1V	T2H/T2V/ T2JH/T2JV	T2YH/ T2YV	T2WH/ T2WV	T3H/ T3V	T3PH/ T3PV	T3YH/ T3YV	T3WH/ T3WV	T0H/T0V		T5H/T5V		T8H/T8V			T2YD(*4) T2YDT
Applications	For programmable controller, relay, compact solenoid valve	Dedicated for programmable controller			For programmable controller, relay				For programmable controller, relay		For programmable controller, relay, IC circuit (no indicator lamp), serial connection		For programmable controller, relay			For programmable controller
Output method	-				NPN output	PNP output	NPN output	NPN output	-							
Pwr. supp. V.	-				10 to 28 VDC				-							
Load voltage	85 to 265 VAC	10 to 30 VDC		24 VDC ±10%	30 VDC or less				12/24 VDC	100/110 VAC	5/12/24 VDC	100/110 VAC	12/24 VDC	110 VAC	220 VAC	24 VDC ±10%
Load current	5 to 100 mA	5 to 20 mA (*3)			100 mA or less		50 mA or less		5 to 50 mA	7 to 20 mA	≤50 mA	≤20 mA	5 to 50 mA	7 to 20 mA	7 to 10 mA	5 to 20 mA
Indicator lamp	LED (Lit when ON)	LED (Lit when ON)	Red/green LED (Lit when ON)	Red/green LED (Lit when ON)	LED (Lit when ON)	Yellow LED (Lit when ON)	Red/green LED (Lit when ON)	Red/green LED (Lit when ON)	LED (Lit when ON)		Without indicator lamp		LED (Lit when ON)			Red/green LED (Lit when ON)
Leakage current	≤1 mA at 100 VAC, ≤2 mA at 200 VAC	1 mA or less			10 μA or less				0 mA							1 mA or less
Weight g	1 m:33 3 m:87 5 m:142	1 m:18 3 m:49 5 m:80	1 m:33 3 m:87 5 m:142	1 m:18 3 m:49 5 m:80	1 m:18 3 m:49 5 m:80		1 m:33 3 m:87 5 m:142	1 m:18 3 m:49 5 m:80	1 m:18 3 m:49 5 m:80				1 m:33 3 m:87 5 m:142			1 m:61 3 m:166 5 m:272

*1: Refer to Ending Page 1 for detailed switch specifications and dimensions.
*2: Switches other than the above models, such as switches with connectors, are also available. Refer to Ending Page 1.
*3: The max. load current is 20 mA at 25°C. The current is lower than 20 mA if the operating ambient temperature around the switch is higher than 25˚C. (5 to 10 mA at 60°C)
*4: AC magnetic field proof switch (T2YD/T2YDT) cannot be used in DC magnetic fields.

Theoretical thrust table

(Unit: N)

Bore size (mm)	Operating direction	Working pressure MPa										
		0.1	0.15	0.2	0.3	0.4	0.5	0.6	0.7	0.8	0.9	1.0
ø20	Push	-	47.1	62.8	94.2	1.26×10^2	1.57×10^2	1.88×10^2	2.20×10^2	2.51×10^2	2.83×10^2	3.14×10^2
	Pull	-	35.3	47.1	70.7	94.2	1.18×10^2	1.41×10^2	1.65×10^2	1.88×10^2	2.12×10^2	2.36×10^2
ø25	Push	-	73.6	98.2	1.47×10^2	1.96×10^2	2.45×10^2	2.95×10^2	3.44×10^2	3.93×10^2	4.42×10^2	4.91×10^2
	Pull	-	56.7	75.6	1.13×10^2	1.51×10^2	1.89×10^2	2.27×10^2	2.64×10^2	3.02×10^2	3.40×10^2	3.78×10^2
ø32	Push	80.4	1.21×10^2	1.61×10^2	2.41×10^2	3.22×10^2	4.02×10^2	4.83×10^2	5.63×10^2	6.43×10^2	7.24×10^2	8.04×10^2
	Pull	60.3	90.5	1.21×10^2	1.81×10^2	2.41×10^2	3.02×10^2	3.62×10^2	4.22×10^2	4.83×10^2	5.43×10^2	6.03×10^2
ø40	Push	1.26×10^2	1.88×10^2	2.51×10^2	3.77×10^2	5.03×10^2	6.28×10^2	7.54×10^2	8.80×10^2	1.01×10^3	1.13×10^3	1.26×10^3
	Pull	1.06×10^2	1.58×10^2	2.11×10^2	3.17×10^2	4.22×10^2	5.28×10^2	6.33×10^2	7.39×10^2	8.44×10^2	9.50×10^2	1.06×10^3
ø50	Push	1.96×10^2	2.95×10^2	3.93×10^2	5.89×10^2	7.85×10^2	9.82×10^2	1.18×10^3	1.37×10^3	1.57×10^3	1.77×10^3	1.96×10^3
	Pull	1.65×10^2	2.47×10^2	3.30×10^2	4.95×10^2	6.60×10^2	8.25×10^2	9.90×10^2	1.15×10^3	1.32×10^3	1.48×10^3	1.65×10^3
ø63	Push	3.12×10^2	4.68×10^2	6.23×10^2	9.35×10^2	1.25×10^3	1.56×10^3	1.87×10^3	2.18×10^3	2.49×10^3	2.81×10^3	3.12×10^3
	Pull	2.80×10^2	4.20×10^2	5.61×10^2	8.41×10^2	1.12×10^3	1.40×10^3	1.68×10^3	1.96×10^3	2.24×10^3	2.52×10^3	2.80×10^3
ø80	Push	5.03×10^2	7.54×10^2	1.01×10^3	1.51×10^3	2.01×10^3	2.51×10^3	3.02×10^3	3.52×10^3	4.02×10^3	4.52×10^3	5.03×10^3
	Pull	4.54×10^2	6.80×10^2	9.07×10^2	1.36×10^3	1.81×10^3	2.27×10^3	2.72×10^3	3.17×10^3	3.63×10^3	4.08×10^3	4.54×10^3

For cylinder weight, refer to pages 558 to 561.

How to order

● Short stroke

Without switch (built-in magnet for switch)

STS-M T2-12 ○-10 ———— F

With switch (built-in magnet for switch)

STS-M T2-12 ○-10-T2H-R-F

● Long stroke length

Without switch (built-in magnet for switch)

STL-M T2-12 ○-50 ———— F

With switch (built-in magnet for switch)

STL-M T2-12 ○-50-T2H-R-F

Model No.

Ⓐ Bearing

Ⓑ Bore size

Ⓒ Port thread

Ⓓ Stroke length

■ Custom stroke length
Available in 5 mm increments. However, the total length is the same as that of the next longer standard stroke length.

Ⓔ Switch model No.
*1 *3 *4

For the 2-color display, T1H/V, T8H/V and AC magnetic field proof switches for ø40 and over, insert "L1" with "-" between Ⓐ and Ⓑ.
Example) For STS-MT2-L1-63-50-T2YH3-D-F
ø80, the 2-color display, T1H/V, T8H/V and AC magnetic field proof switches cannot be retrofitted on a previously purchased standard product. In this case, order the model No. with "L1" inserted between Ⓐ and Ⓑ.
Example) STS-MT2-L1-80-50-F

Ⓕ Switch quantity

Ⓖ Option

Code	Description
Ⓐ Bearing	
M	Metal bush bearing
B	Ball bearing

Ⓑ Bore size (mm)	
12	ø12
16	ø16
20	ø20
25	ø25
32	ø32
40	ø40
50	ø50
63	ø63
80	ø80

Ⓒ Port thread	
Blank	M5 (ø12 to ø25)
	Rc thread (ø32 to ø80)
NN	NPT thread (ø32 and over) made-to-order product
GN	G thread (ø32 and over) made-to-order product

Ⓓ Stroke length (mm)

Refer to the stroke length table on the following page.

Ⓔ Switch model No.

Axial lead wire	Radial lead wire	Contact	Voltage AC	Voltage DC	Indicator	Lead wire
T0H*	T0V*	Reed	●	●	1-color display	2-wire
T5H*	T5V*		●	●	Without indicator lamp	
T8H*	T8V*		●	●	1-color display	
T1H*	T1V*	Proximity	●			
T2H*	T2V*			●		
T3H*	T3V*			●		3-wire
T3PH*	T3PV*			●	1-color display	3-wire
T2WH*	T2WV*			●	2-color display	2-wire
T2YH*	T2YV*			●		2-wire
T3WH*	T3WV*			●		3-wire
T3YH*	T3YV*			●		3-wire
T2JH*	T2JV*			●	1-color display off-delay	2-wire
T2YD*	-			●	2-color display AC magnetic field	2-wire
T2YDT*	-			●		

*** Lead wire length**	
Blank	1 m (standard)
3	3 m (option)
5	5 m (option)

Ⓕ Switch quantity	
R	1 on rod side
H	1 on head side
D	2
T	3

Ⓖ Option	
F	End plate material: steel
M	Corrosion proof (Piston rod and guide rod material: SUS) (made-to-order product) *5
M1	Corrosion proof (Piston rod, guide rod and end plate material: SUS) (made-to-order product) *5

⚠ Precautions for model No. selection

*1 : Switches other than switch model No. are also available. (Made-to-order product)
Refer to Ending Page 1 for details.
*2 : Refer to pages 444 to 447 for combinations of variations/options.
*3 : T8H/V cannot be installed on ø12 and ø16.
*4 : Switches are shipped with the product. Contact CKD if assembling before shipment is necessary.
*5 : Refer to page 458 for material details.

[Example of model No.]

STS-MT2-12-30-T0H-R-F

Model: Guided cylinder, short stroke length, standard/packing seal material fluoro rubber

Ⓐ Bearing : Metal bush bearing
Ⓑ Bore size : ø12 mm
Ⓒ Port thread : M5
Ⓓ Stroke length : 30 mm
Ⓔ Switch model No. : Reed switch T0H, 1 m lead wire length
Ⓕ Switch quantity : 1 on rod side
Ⓖ Option : End plate material: steel

Ⓓ Stroke length

Series	Stroke length (mm)		Applicable bore size								
			ø12	ø16	ø20	ø25	ø32	ø40	ø50	ø63	ø80
STS	Standard stroke length	10	●	●							
		20	●	●							
		25			●	●	●	●	●	●	●
		30	●	●							
		40	●	●							
		50	●	●	●	●	●	●	●	●	●
		75									●
		100									●
	Min. stroke length *1		5								
	Custom stroke *1, 2		In 5 mm increments								
STL	Standard stroke length	50	●	●	●	●	●	●	●	●	
		75	●	●	●	●	●	●	●	●	●
		100	●	●	●	●	●	●	●	●	●
		125	●	●	●	●	●	●	●	●	●
		150	●	●	●	●	●	●	●	●	●
		175	●	●	●	●	●	●	●	●	●
		200	●	●	●	●	●	●	●	●	●
		225			●	●	●	●	●	●	●
		250			●	●	●	●	●	●	●
		275			●	●	●	●	●	●	●
		300			●	●	●	●	●	●	●
		325			●	●	●	●	●	●	●
		350			●	●	●	●	●	●	●
		375			●	●	●	●	●	●	●
		400			●	●	●	●	●	●	●
	Min. stroke length *1		50		30						55
	Custom stroke *1, 2		In 5 mm increments								

*1: The total dimensions are the same as the longer standard stroke length.
*2: Special total length for custom stroke length can be provided when a custom stroke length is used. (Made to order)

How to order switch

SW - T0V

Switch model No.
(Item Ⓔ on page 482)

LCM
LCR
LCG
LCW
LCX
STM
STG
STS/STL
STR2
UCA2
ULK*
JSK/M2
JSG
JSC3/JSC4
USSD
UFCD
USC
UB
JSB3
LMB
LML
HCM
HCA
LBC
CAC4
UCAC2
CAC-N
UCAC-N
RCS2
RCC2
PCC
SHC
MCP
GLC
MFC
BBS
RRC
GRC
RV3*
NHS
HRL
LN
Hand
Chuk
MecHnd/Chuk
ShkAbs
FJ
FK
SpdContr
Ending

Internal structure and parts list

● Packing material fluoro rubber

STS-$^{M}_{B}$T2

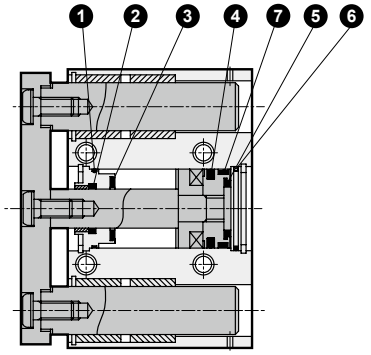

Metal bush bearing

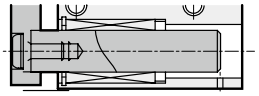

Ball bearing

STL-$^{M}_{B}$T2

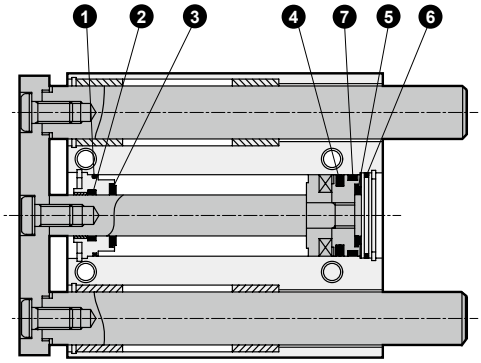

Metal bush bearing

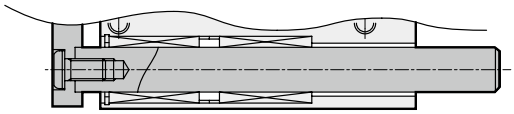

Ball bearing

Parts list (Parts not listed below are the same as those of the double acting/standard single rod. Refer to pages 453 to 457.)

No.	Part name	Material	Remarks
ST$^{S}_{L}$-$^{M}_{B}$T2 (packing material fluoro rubber)			
1	Metal gasket	Fluoro rubber	
2	Rod packing	Fluoro rubber	
3	Cushion rubber (R)	Urethane rubber	
4	Piston packing	Fluoro rubber	
5	Cushion rubber (H)	Urethane rubber	
6	O-ring	Fluoro rubber	
7	Wear ring	Acetal resin	

Repair parts list

● ST$^{S}_{L}$-$^{M}_{B}$T2 (packing material fluoro rubber)

Bore size (mm)	Kit No.	Repair parts No.
ø12	STS-T2-12K	
ø16	STS-T2-16K	
ø20	STS-T2-20K	❶ ❷ ❸ ❹
ø25	STS-T2-25K	
ø32	STS-T2-32K	❺ ❻ ❼
ø40	STS-T2-40K	
ø50	STS-T2-50K	
ø63	STS-T2-63K	
ø80	STS-T2-80K	

Note: Specify the kit No. when placing an order.

Dimensions

Same as STS/STL Series (double acting/single rod). Refer to the pages below.

STS Series: Page 459 (ø8 to ø16), page 460 (ø20 and ø25), page 461 (ø32 to ø63) and page 462 (ø80)
STL Series: Page 464 (ø8 to ø16), page 465 (ø20 and ø25), page 466 (ø32 to ø63) and page 467 (ø80)

MEMO

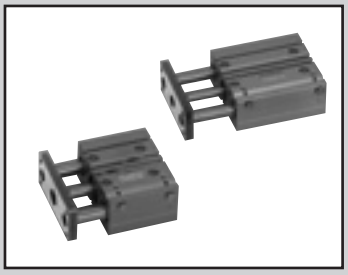

Guided cylinder Rubber-air cushioned

STS/STL-$^{M}_{B}$-*C Series

● Bore size: ø32/ø40/ø50/ø63/ø80

JIS symbol

RoHS CAD

Specifications

Item		STS/L-M/B-*C				
Bore size	mm	ø32	ø40	ø50	ø63	ø80
Actuation		Double acting				
Working fluid		Compressed air				
Max. working pressure	MPa	1.0 (≈150 psi, 10 bar)				
Min. working pressure	MPa	0.2 (≈29 psi, 2 bar)				
Proof pressure	MPa	1.6 (≈230 psi, 16 bar)				
Ambient temperature	°C	-10 (14°F) to 60 (140°F) (no freezing)				
Port size		Rc1/8		Rc1/4		Rc3/8
Stroke tolerance	mm	+2.0 0				
Working piston speed	mm/s	50 to 500			50 to 300	
Cushion		Rubber-air cushioned				
Lubrication		Not required (use turbine oil class 1 ISO VG32 if necessary for lubrication)				
Allowable absorbed energy	J	0.401	0.627	0.980	1.560	2.510

Stroke

· Short stroke STS

Bore size (mm)	Stroke (mm)	Max. stroke (mm)	Min. stroke (mm)	Min. stroke with switch (mm)
ø32	25, 50	50	5	5
ø40				
ø50				
ø63			10	10
ø80	25, 50, 75, 100	100		

With one or two switches

· Long stroke STL

Bore size (mm)	Stroke (mm)	Max. stroke (mm)	Min. stroke (mm)	Min. stroke with switch (mm)
ø32	50, 75, 100, 125, 150 175, 200, 225, 250 275, 300, 325, 350 375, 400	400	30	30
ø40				
ø50				
ø63				
ø80	75, 100, 125, 150, 175 200, 225, 250, 275, 300 325, 350, 375, 400		55	55

Note : The custom stroke is available in 5 mm increments.
However, the total length is the same as that of the next longer standard stroke.

With one or two switches

Rubber-air cushion mechanism

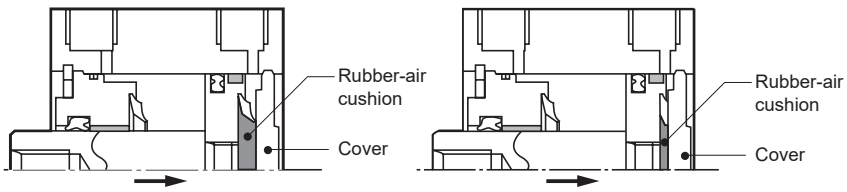

When pulled

An airtight space is created in the area when the piston operates and the rubber-air cushion and cover make contact. Air in the airtight area is further compressed, absorbing energy as the piston operates. At the end of the stroke, energy generated by compression distortion of the air cushion is also added.

Cylinder with rubber cushion
Cylinder with rubber-air cushion

Data of the reduction of collision noise level (an example case)

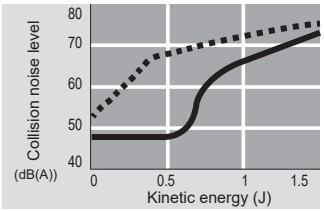

Data of the reduction of collision acceleration level (an example case)

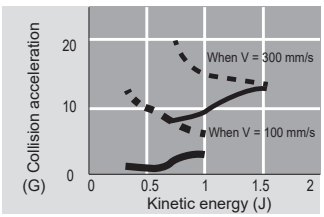

Switch specifications

● 1-color/2-color LED/for AC magnetic field proof

Item	Proximity 2-wire	Proximity 2-wire			Proximity 3-wire				Reed 2-wire							Proximity 2-wire
	T1H/ T1V	T2H/T2V/ T2JH/T2JV	T2YH/ T2YV	T2WH/ T2WV	T3H/ T3V	T3PH/ T3PV	T3YH/ T3YV	T3WH/ T3WV	T0H/T0V		T5H/T5V		T8H/T8V			T2YD(*4) T2YDT
Applications	For programming controller, relay, compact solenoid valve	Dedicated for programmable controller			For programmable controller, relay				For programmable controller, relay		For programmable controller, relay, IC circuit (no indicator lamp), serial connection		For programmable controller, relay			Dedicated for programmable controller
Output method	-				NPN output	PNP output	NPN output	NPN output	-							
Pwr. supp. V.	-				10 to 28 VDC				-							
Load voltage	85 to 265 VAC	10 to 30 VDC		24 VDC ±10%	30 VDC or less				12/24 VDC	100/110 VAC	5/12/24 VDC	100/110 VAC	12/24 VDC	110 VAC	220 VAC	24 VDC ±10%
Load current	5 to 100mA	5 to 20 mA (*3)			100 mA or less		50 mA or less		5 to 50mA	7 to 20mA	50 mA or less	20 mA or less	5 to 50mA	7 to 20mA	7 to 10mA	5 to 20mA
Indicator lamp	LED (Lit when ON)	LED (Lit when ON)	Red/green LED (Lit when ON)	Red/green LED (Lit when ON)	LED (Lit when ON)	Yellow LED (Lit when ON)	Red/green LED (Lit when ON)	Red/green LED (Lit when ON)	LED (Lit when ON)		No indicator lamp		LED (Lit when ON)			Red/green LED (Lit when ON)
Leakage current	1 mA or less with 100 VAC, 2 mA or less with 200 VAC	1 mA or less			10 μA or less				0mA							1 mA or less
Weight g	1 m: 33 3 m: 87 5 m: 142	1 m: 18 3 m: 49 5 m: 80	1 m: 33 3 m: 87 5 m: 142	1 m: 18 3 m: 49 5 m: 80	1 m: 18 3 m: 49 5 m: 80		1 m: 33 3 m: 87 5 m: 142	1 m: 18 3 m: 49 5 m: 80	1 m: 18 3 m: 49 5 m: 80				1 m: 33 3 m: 87 5 m: 142			1 m: 61 3 m: 166 5 m: 272

*1: Refer to Ending Page 1 for detailed switch specifications and dimensions.
*2: Switches other than the above models, such as switches with connectors, are also available. Refer to Ending Page 1.
*3: The max. load current is 20 mA at 25°C. The current is lower than 20 mA if the operating ambient temperature around the switch is higher than 25˚C. (5 to 10 mA at 60°C)
*4: AC magnetic field proof switch (T2YD/T2YDT) cannot be used in DC magnetic fields.

Theoretical thrust table

(Unit: N)

Bore size (mm)	Operating direction	Working pressure MPa								
		0.2	0.3	0.4	0.5	0.6	0.7	0.8	0.9	1.0
ø32	Push	1.61×10^2	2.41×10^2	3.22×10^2	4.02×10^2	4.83×10^2	5.63×10^2	6.43×10^2	7.24×10^2	8.04×10^2
	Pull	1.21×10^2	1.81×10^2	2.41×10^2	3.02×10^2	3.62×10^2	4.22×10^2	4.83×10^2	5.43×10^2	6.03×10^2
ø40	Push	2.51×10^2	3.77×10^2	5.03×10^2	6.28×10^2	7.54×10^2	8.80×10^2	1.01×10^3	1.13×10^3	1.26×10^3
	Pull	2.11×10^2	3.17×10^2	4.22×10^2	5.28×10^2	6.33×10^2	7.39×10^2	8.44×10^2	9.50×10^2	1.06×10^3
ø50	Push	3.93×10^2	5.89×10^2	7.85×10^2	9.82×10^2	1.18×10^3	1.37×10^3	1.57×10^3	1.77×10^3	1.96×10^3
	Pull	3.30×10^2	4.95×10^2	6.60×10^2	8.25×10^2	9.90×10^2	1.15×10^3	1.32×10^3	1.48×10^3	1.65×10^3
ø63	Push	6.23×10^2	9.35×10^2	1.25×10^3	1.56×10^3	1.87×10^3	2.18×10^3	2.49×10^3	2.81×10^3	3.12×10^3
	Pull	5.61×10^2	8.41×10^2	1.12×10^3	1.40×10^3	1.68×10^3	1.96×10^3	2.24×10^3	2.52×10^3	2.80×10^3
ø80	Push	1.01×10^3	1.51×10^3	2.01×10^3	2.51×10^3	3.02×10^3	3.52×10^3	4.02×10^3	4.52×10^3	5.03×10^3
	Pull	9.07×10^2	1.36×10^3	1.81×10^3	2.27×10^3	2.72×10^3	3.17×10^3	3.63×10^3	4.08×10^3	4.54×10^3

For cylinder weight, refer to pages 558 to 561.

How to order

● Short stroke

Without switch (built-in magnet for switch)

STS - M - 32 ( ) C - 50 ———— F

With switch (built-in magnet for switch)

STS - M - 32 ( ) C - 50 - T0H - R - F

● Long stroke

Without switch (built-in magnet for switch)

STL - M - 32 ( ) C - 100 ———— F

With switch (built-in magnet for switch)

STL - M - 32 ( ) C - 100 - T0H - D - F

Ⓐ Bearing

Ⓑ Bore size

Ⓒ Port thread

Rubber-air cushioned

Ⓓ Stroke

■ The custom stroke is available in 5 mm increments. However, the total length is the same as that of the next longer standard stroke.

■ Total length dimension with custom stroke is handled as custom stroke dedicated length. (Made to order)

Ⓔ Switch model No. *3

For the 2-color LED, T1H/V, T8H/V and AC magnetic field proof switches for ø40 and over, insert "L1" with "-" between Items Ⓐ and Ⓑ.
(Example)
STS-M-L1-63C-50-T2YH3-D-F
For ø80, the 2-color LED, T1H/V, T8H/V and AC magnetic field proof switches cannot be retrofitted on a previously purchased standard product. In this case, order the model No. with "L1" inserted between Ⓐ and Ⓑ.
(Example) STS-M-L1-80C-50-F

Ⓕ Switch quantity

Ⓖ Option

⚠ Precautions for model No. selection

*1 : The total dimensions are the same as the longer standard stroke.
*2 : Refer to pages 444 to 447 for combinations of variations/options.
*3 : Switches are shipped with the product. Contact CKD if assembling before shipment is necessary.
*4 : Refer to page 458 for material details.

[Example of model No.]

STS-M-32C-50-T0H-R

Model : Guided cylinder, short stroke
Rubber-air cushioned

Ⓐ Bearing : Metal bush bearing
Ⓑ Bore size : ø32 mm
Ⓒ Port thread : Rc thread
Ⓓ Stroke : 50 mm
Ⓔ Switch model No. : Reed TOH switch, lead wire 1 m
Ⓕ Switch quantity : 1 on rod side

How to order switch

SW - T0H

Switch model No.
(Item Ⓔ above)

Code	Description
Ⓐ Bearing	
M	Metal bush bearing
B	Ball bearing

Ⓑ Bore size (mm)	
32	ø32
40	ø40
50	ø50
63	ø63
80	ø80

Ⓒ Port thread	
Blank	Rc thread
N	NPT thread (made-to-order product)
G	G thread (made-to-order product)

Ⓓ Stroke

Series	Stroke (mm)		Applicable bore size ø32	ø40	ø50	ø63	ø80
STS	Standard Stroke	25	●	●	●	●	●
		50	●	●	●	●	●
		75					●
		100					●
	Min. stroke *1		5			10	
	Custom stroke *1		In 5 mm increments				
STL	Standard stroke	50	●	●	●	●	
		75	●	●	●	●	●
		100	●	●	●	●	●
		125	●	●	●	●	●
		150	●	●	●	●	●
		175	●	●	●	●	●
		200	●	●	●	●	●
		225	●	●	●	●	●
		250	●	●	●	●	●
		275	●	●	●	●	●
		300	●	●	●	●	●
		325	●	●	●	●	●
		350	●	●	●	●	●
		375	●	●	●	●	●
		400	●	●	●	●	●
	Min. stroke *1		30				55
	Custom stroke *1		In 5 mm increments				

Ⓔ Switch model No.

Straight lead wire	L-shaped lead wire	Contact	Voltage AC	Voltage DC	Indicator	Lead wire
T0H*	T0V*	Reed	●	●	1-color LED	2-wire
T5H*	T5V*	Reed	●	●	No indicator lamp	2-wire
T8H*	T8V*	Reed	●	●	1-color LED	2-wire
T1H*	T1V*	Proximity	●		1-color LED	2-wire
T2H*	T2V*	Proximity		●	1-color LED	2-wire
T3H*	T3V*	Proximity		●	1-color LED	3-wire
T3PH*	T3PV*	Proximity		●	1-color LED	3-wire
T2WH*	T2WV*	Proximity		●	2-color LED	2-wire
T2YH*	T2YV*	Proximity		●	2-color LED	2-wire
T3WH*	T3WV*	Proximity		●	2-color LED	3-wire
T3YH*	T3YV*	Proximity		●	2-color LED	3-wire
T2JH*	T2JV*	Proximity		●	1-color LED off-delay	2-wire
T2YD*	-	Proximity		●	2-color LED AC magnetic field	2-wire
T2YDT*	-	Proximity		●	2-color LED AC magnetic field	2-wire

*** Lead wire length (m)**	
Blank	1 m (standard)
3	3 m (option)
5	5 m (option)

Ⓕ Switch quantity	
R	1 on rod side
H	1 on head side
D	2

Ⓖ Option	
F	End plate material (steel)
M	Corrosion proof (Piston rod and guide rod material: SUS) (made to order) *4
M1	Corrosion proof (Piston rod, guide rod and end plate material: SUS) (made to order) *4
P6	Copper and PTFE free (made to order)

Internal structure and parts list

● STS-$^{M}_{B}$-32C to 80C (short stroke)

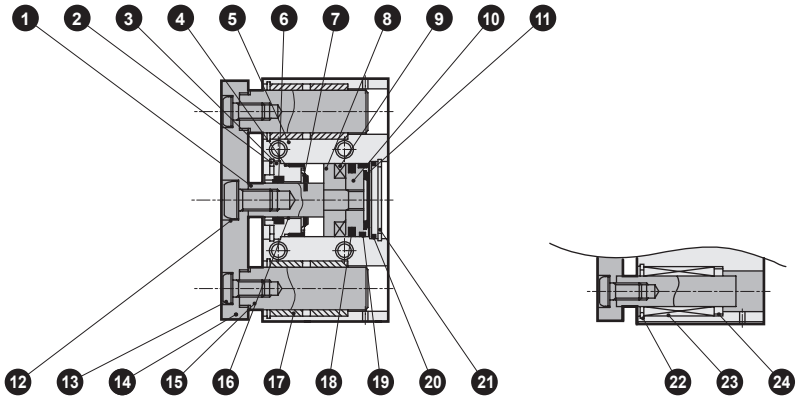

Metal bush bearing　　Ball bearing

● STL-$^{M}_{B}$-32C to 80C (long stroke)

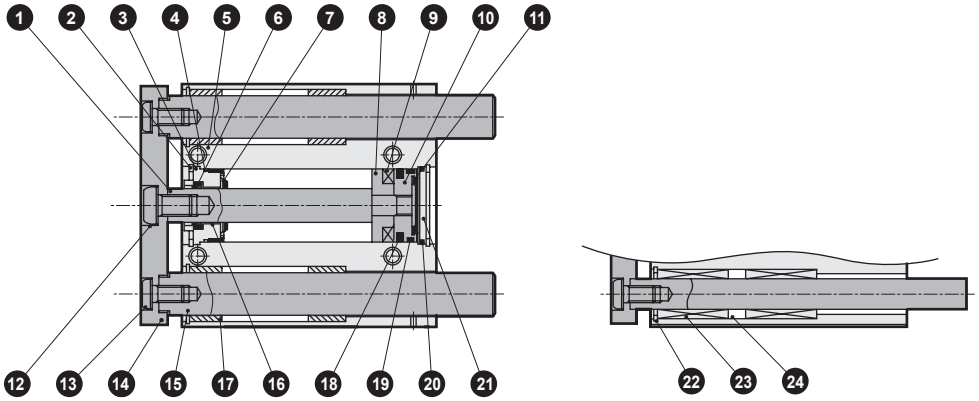

Metal bush bearing　　Ball bearing

No.	Part name	Material	Remarks	No.	Part name	Material	Remarks
1	Piston rod	Steel	Industrial chrome plating	13	Hexagon socket button head bolt	Steel	Zinc chromate
2	C-snap ring	Steel	Zinc phosphate	14	End plate	Aluminum alloy	Alumite
3	Rod metal	Special aluminum alloy	Alumite	15	Guide rod	Steel	Industrial chrome plating
4	Metal gasket	Nitrile rubber		16	Bush	Oiles drymet	
5	Cylinder body	Aluminum alloy	Hard alumite	17	Metal	Oil impregnated bearing alloy	
6	Rod packing	Nitrile rubber		18	Piston packing	Nitrile rubber	
7	Rubber air cushion (R)	Urethane rubber		19	Wear ring	Acetal resin	
8	Spacer	Aluminum alloy		20	O-ring	Nitrile rubber	
9	Magnet	Plastic		21	Base plate	Aluminum alloy (ø32 to ø63), steel (ø80)	Zinc chromate (ø80)
10	Piston	Aluminum alloy		22	C-snap ring	Steel	Zinc phosphate
11	Rubber air cushion (H)	Special rubber		23	Ball bush		
12	Disc spring washer	Steel		24	Collar	Aluminum alloy	(Not provided for ø80)

Repair parts list

Bore size (mm)	Kit No.	Repair parts No.
ø32	STS-32CK	❹ ❻ ❼ ⓫ ⓲ ⓳ ⓴
ø40	STS-40CK	
ø50	STS-50CK	
ø63	STS-63CK	
ø80	STS-80CK	

Dimensions

Same as STS/STL Series (double acting/single rod). Refer to the pages below.

STS Series : Page 459 (ø8 to ø16), page 460 (ø20 and ø25), page 461 (ø32 to ø63) and page 462 (ø80)
STL Series : Page 464 (ø8 to ø16), page 465 (ø20 and ø25), page 466 (ø32 to ø63) and page 467 (ø80)

Technical data

Refer to page 554 for guided cylinder selection guide.

[Comparison of collision noise level]

Values are comparison samples obtained under the conditions below.
As the values vary with base rigidity, etc., they are not guaranteed.

(Test conditions)

Cylinder : STS/L
Mounting direction of cylinder : Vertical with rod upward
Cylinder supply pressure : 0.5 MPa
Position of sound level meter : 1 m from sample

Standard rubber cushion:
Rubber-air cushion :

ø32

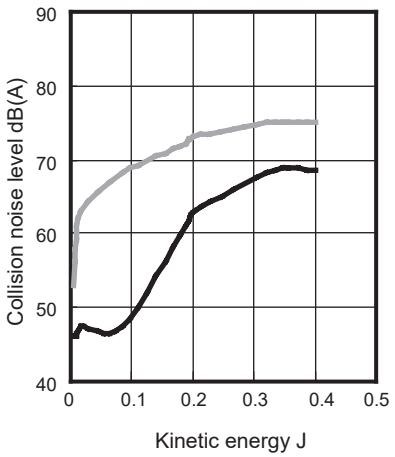

ø40

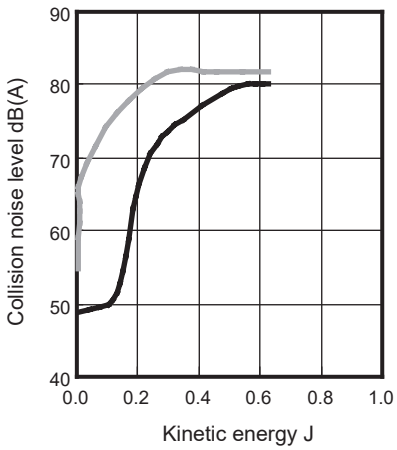

ø50

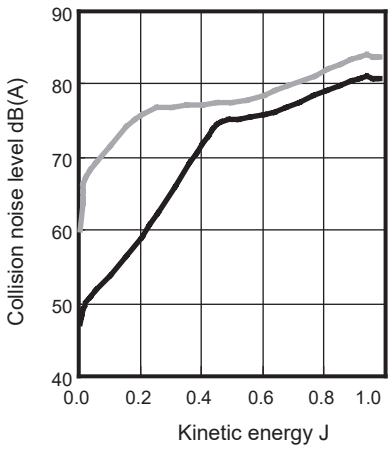

ø63

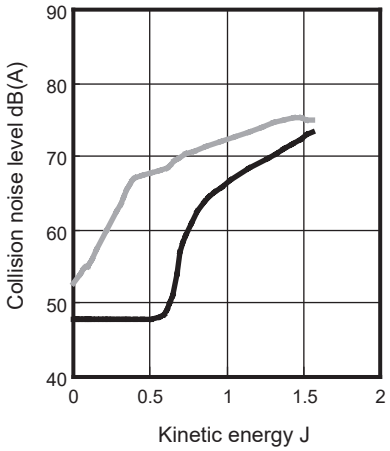

ø80

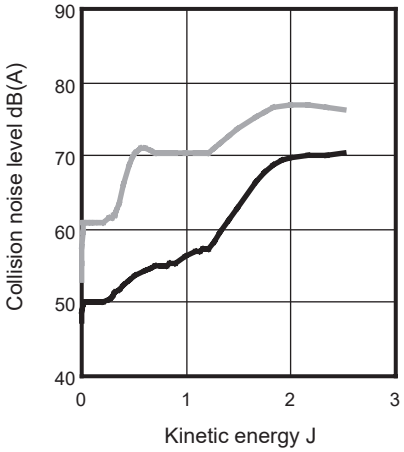

LCM
LCR
LCG
LCW
LCX
STM
STG
STS/STL
STR2
UCA2
ULK*
JSK/M2
JSG
JSC3/JSC4
USSD
UFCD
USC
UB
JSB3
LMB
LML
HCM
HCA
LBC
CAC4
UCAC2
CAC-N
UCAC-N
RCS2
RCC2
PCC
SHC
MCP
GLC
MFC
BBS
RRC
GRC
RV3*
NHS
HRL
LN
Hand
Chuk
MecHnd/Chuk
ShkAbs
FJ
FK
SpdContr
Ending

Technical data

[Comparison of collision acceleration]

Standard rubber cushion:
Rubber-air cushion :

ø32

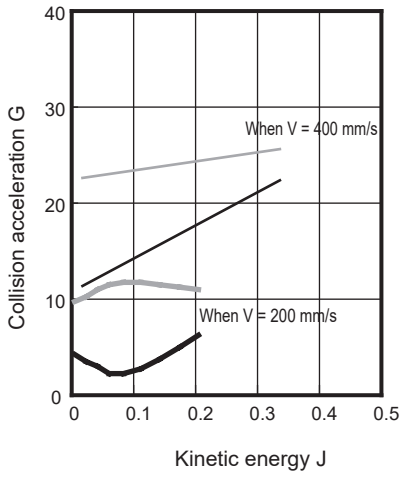

ø40

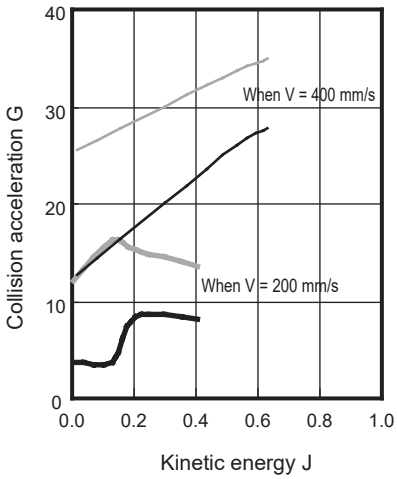

ø50

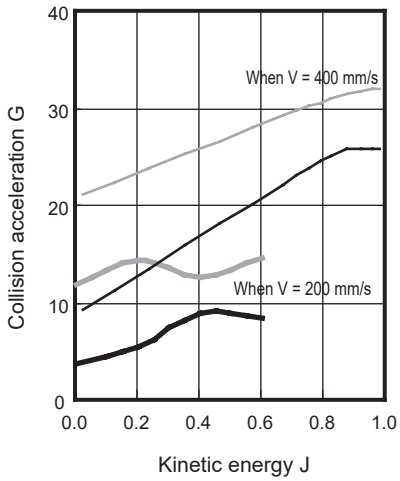

ø63

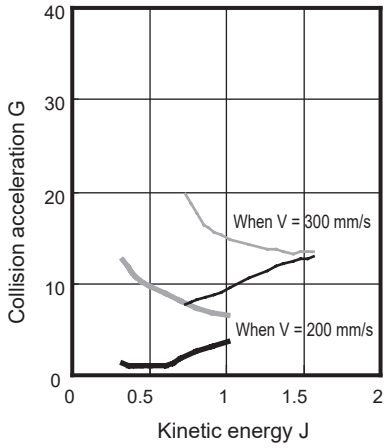

ø80

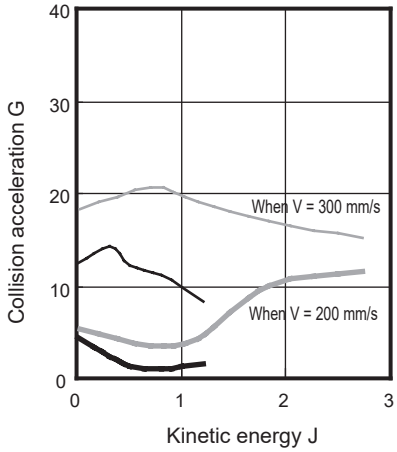

[Allowable energy value]

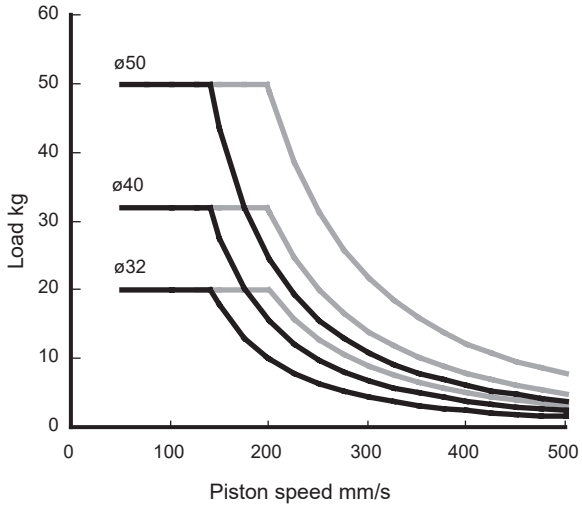

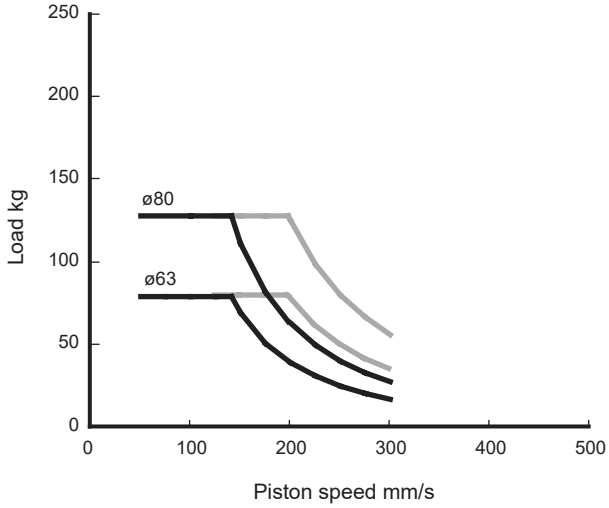

Usable in the range below and to the left of the curve.
Although it can be used in the range marked with ▬, the use within the range marked with solid line is recommended to maximize the noise reduction effect.

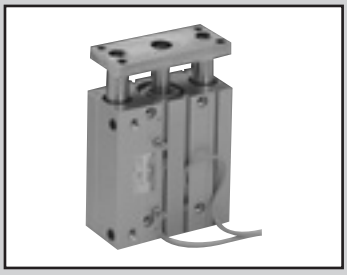

Guided cylinder, double acting/air cushioned

STS/STL-$^{M}_{B}$C Series

● Bore size: ø25/ø32/ø40/ø50/ø63/ø80

JIS symbol

RoHS CAD

Specifications

1 MPa = 10 bar

Item	STS-MC/BC, STL-MC/BC					
Bore size mm	ø25	ø32	ø40	ø50	ø63	ø80
Actuation	Double acting/air cushioned					
Working fluid	Compressed air					
Max. working pressure MPa	1.0 (≈150 psi, 10 bar)					
Min. working pressure MPa	0.15 (≈22 psi)	0.1 (≈15 psi, 1 bar)				
Proof pressure MPa	1.6 (≈230 psi, 16 bar)					
Ambient temperature °C	-10 (14°F) to 60 (140°F) (no freezing)					
Port size	M5	Rc1/8		Rc1/4		Rc3/8
Stroke tolerance mm	$^{+2.0}_{0}$					
Working piston speed mm/s	50 to 500				50 to 300	
Cushion	With air cushion					
Effective cushion length mm	8.1	8.6		13.4		15.4
Lubrication	Not required (use turbine oil class 1 ISO VG32 if necessary for lubrication)					
Allowable absorbed energy J	1.18	2.27	3.05	3.81	15.64	20.18

Stroke

· Short stroke STS

Bore size (mm)	Standard stroke (mm)	Max. stroke (mm)	Min. stroke (mm) Note	Min. stroke with switch (mm) Note
ø25	25, 50	50	15	15 With one or two switches
ø32				
ø40				
ø50				
ø63				
ø80	25, 50, 75, 100	100		

Note: For min. stroke and below, select the basic since there is no cushion effect.

· Long stroke STL

Bore size (mm)	Standard stroke (mm)	Max. stroke (mm)	Min. stroke (mm)	Min. stroke with switch (mm)
ø25	50, 75, 100, 125, 150 175, 200, 225, 250 275, 300, 325, 350 375, 400	400	30	30 With one or two switches
ø32				
ø40				
ø50				
ø63				
ø80	75, 100, 125, 150, 175 200, 225, 250, 275, 300 325, 350, 375	375	55	55 With one or two switches

Note: The custom stroke is available in 1 mm increments. (Made to order)

Switch specifications

● 1-color/2-color LED/for AC magnetic field proof

Item	Proximity 2-wire	Proximity 2-wire			Proximity 3-wire				Reed 2-wire							Proximity 2-wire
	T1H/ T1V	T2H/T2V/ T2JH/T2JV	T2YH/ T2YV	T2WH/ T2WV	T3H/ T3V	T3PH/ T3PV	T3YH/ T3YV	T3WH/ T3WV	T0H/T0V		T5H/T5V		T8H/T8V			T2YD(*4) T2YDT
Applications	For programmable controller, relay, compact solenoid valve	Dedicated for programmable controller			For programmable controller, relay				For programmable controller, relay		For programmable controller, relay, IC circuit (no indicator lamp), serial connection		For programmable controller, relay			For programmable controller
Output method	-				NPN output	PNP output	NPN output	NPN output	-							
Pwr. supp. V.	-				10 to 28 VDC				-							
Load voltage	85 to 265 VAC	10 to 30 VDC		24 VDC ±10%	30 VDC or less				12/24 VDC	100/110 VAC	5/12/24 VDC	100/110 VAC	12/24 VDC	110 VAC	220 VAC	24 VDC ±10%
Load current	5 to 100mA	5 to 20 mA (*3)			100 mA or less		50 mA or less		5 to 50mA	7 to 20mA	50 mA or less	20 mA or less	5 to 50mA	7 to 20mA	7 to 10mA	5 to 20mA
Indicator lamp	LED (Lit when ON)	LED (Lit when ON)	Red/green LED (Lit when ON)	Red/green LED (Lit when ON)	LED (Lit when ON)	Yellow LED (Lit when ON)	Red/green LED (Lit when ON)	Red/green LED (Lit when ON)	LED (Lit when ON)		No indicator lamp		LED (Lit when ON)			Red/green LED (Lit when ON)
Leakage current	1 mA or less with 100 VAC, 2 mA or less with 200 VAC	1 mA or less			10 μA or less				0mA							1 mA or less
Weight g	1 m: 33 3 m: 87 5 m: 142	1 m: 18 3 m: 49 5 m: 80	1 m: 33 3 m: 87 5 m: 142	1 m: 18 3 m: 49 5 m: 80	1 m: 18 3 m: 49 5 m: 80		1 m: 33 3 m: 87 5 m: 142	1 m: 18 3 m: 49 5 m: 80	1 m: 18 3 m: 49 5 m: 80				1 m: 33 3 m: 87 5 m: 142			1 m: 61 3 m: 166 5 m: 272

*1: Refer to Ending Page 1 for detailed switch specifications and dimensions.
*2: Switches other than the above models, such as switches with connectors, are also available. Refer to Ending Page 1.
*3: The max. load current is 20 mA at 25°C. The current is lower than 20 mA if the operating ambient temperature around the switch is higher than 25˚C. (5 to 10 mA at 60°C)
*4: AC magnetic field proof switch (T2YD/T2YDT) cannot be used in DC magnetic fields.

Theoretical thrust table

(Unit: N)

Bore size (mm)	Operating direction	Working pressure MPa										
		0.1	0.15	0.2	0.3	0.4	0.5	0.6	0.7	0.8	0.9	1.0
ø25	Push	-	73.6	98.2	1.47×10^2	1.96×10^2	2.45×10^2	2.95×10^2	3.44×10^2	3.93×10^2	4.42×10^2	4.91×10^2
	Pull	-	56.7	75.6	1.13×10^2	1.51×10^2	1.89×10^2	2.27×10^2	2.64×10^2	3.02×10^2	3.40×10^2	3.78×10^2
ø32	Push	80.4	1.21×10^2	1.61×10^2	2.41×10^2	3.22×10^2	4.02×10^2	4.83×10^2	5.63×10^2	6.43×10^2	7.24×10^2	8.04×10^2
	Pull	60.3	90.5	1.21×10^2	1.81×10^2	2.41×10^2	3.02×10^2	3.62×10^2	4.22×10^2	4.83×10^2	5.43×10^2	6.03×10^2
ø40	Push	1.26×10^2	1.88×10^2	2.51×10^2	3.77×10^2	5.03×10^2	6.28×10^2	7.54×10^2	8.80×10^2	1.01×10^3	1.13×10^3	1.26×10^3
	Pull	1.06×10^2	1.58×10^2	2.11×10^2	3.17×10^2	4.22×10^2	5.28×10^2	6.33×10^2	7.39×10^2	8.44×10^2	9.50×10^2	1.06×10^3
ø50	Push	1.96×10^2	2.95×10^2	3.93×10^2	5.89×10^2	7.85×10^2	9.82×10^2	1.18×10^3	1.37×10^3	1.57×10^3	1.77×10^3	1.96×10^3
	Pull	1.65×10^2	2.47×10^2	3.30×10^2	4.95×10^2	6.60×10^2	8.25×10^2	9.90×10^2	1.15×10^3	1.32×10^3	1.48×10^3	1.65×10^3
ø63	Push	3.12×10^2	4.68×10^2	6.23×10^2	9.35×10^2	1.25×10^3	1.56×10^3	1.87×10^3	2.18×10^3	2.49×10^3	2.81×10^3	3.12×10^3
	Pull	2.80×10^2	4.20×10^2	5.61×10^2	8.41×10^2	1.12×10^3	1.40×10^3	1.68×10^3	1.96×10^3	2.24×10^3	2.52×10^3	2.80×10^3
ø80	Push	5.03×10^2	7.54×10^2	1.01×10^3	1.51×10^3	2.01×10^3	2.51×10^3	3.02×10^3	3.52×10^3	4.02×10^3	4.52×10^3	5.03×10^3
	Pull	4.54×10^2	6.80×10^2	9.07×10^2	1.36×10^3	1.81×10^3	2.27×10^3	2.72×10^3	3.17×10^3	3.63×10^3	4.08×10^3	4.54×10^3

For cylinder weight, refer to pages 558 to 561.

LCM
LCR
LCG
LCW
LCX
STM
STG
STS/STL
STR2
UCA2
ULK*
JSK/M2
JSG
JSC3/JSC4
USSD
UFCD
USC
UB
JSB3
LMB
LML
HCM
HCA
LBC
CAC4
UCAC2
CAC-N
UCAC-N
RCS2
RCC2
PCC
SHC
MCP
GLC
MFC
BBS
RRC
GRC
RV3*
NHS
HRL
LN
Hand
Chuk
MecHnd/Chuk
ShkAbs
FJ
FK
SpdContr
Ending

How to order

●Short stroke

Without switch (built-in magnet for switch)

STS - M C - 25 ◯ - 25 ——— F

With switch (built-in magnet for switch)

STS - M C - 25 ◯ - 25 - T2H - R - F

●Long stroke

Without switch (built-in magnet for switch)

STL - M C - 25 ◯ - 50 ——— F

With switch (built-in magnet for switch)

STL - M C - 25 ◯ - 50 - T2H - R - F

Ⓐ Bearing

Ⓑ Bore size

Ⓒ Port thread

Ⓓ Stroke

Ⓔ Switch model No. *1, *5

For the 2-color LED, T1H/V, T8H/V and AC magnetic field proof switches for ø40 and over, insert "L1" with "-" between Ⓐ and Ⓑ.
(Example) STS-MC-L1-63-50-T2YH3-D-F
For ø80, the 2-color LED, T1H/V, T8H/V and AC magnetic field proof switches cannot be retrofitted on a previously purchased standard product. In this case, order the model No. with "L1" inserted between Ⓐ and Ⓑ. (Example) STS-MC-L1-80-50-F

Ⓕ Switch quantity

Ⓖ Option

Precautions for model No. selection

*1 : Switches other than Ⓔ Switch model No. are also available. (Made-to-order product)
Refer to Ending Page 1 for details.
*2 : Refer to pages 444 to 447 for combinations of variations/options.
*3 : Refer to page 458 for material details.
*4 : ø25 with ball bearing B is copper and PTFE free as standard.
*5 : Switches are shipped with the product. Contact CKD if assembling before shipment is necessary.

Code	Description
Ⓐ Bearing	
M	Metal bush bearing
B	Ball bearing

Ⓑ Bore size (mm)	
25	ø25
32	ø32
40	ø40
50	ø50
63	ø63
80	ø80

Ⓒ Port thread	
Blank	M5(ø25)
	Rc thread (ø32 to ø80)
NN	NPT thread (ø32 and over) made-to-order product
GN	G thread (ø32 and over) made-to-order product

Ⓓ Stroke (mm)

Refer to the stroke table on the following page.

Ⓔ Switch model No.

Straight Lead wire	L-shaped Lead wire	Contact	Voltage AC	Voltage DC	Indicator	Lead Line
T0H*	T0V*	Reed	●	●	1-color LED	2-wire
T5H*	T5V*	Reed	●	●	No indicator lamp	2-wire
T8H*	T8V*	Reed	●	●	1-color LED	2-wire
T1H*	T1V*	Proximity	●		1-color LED	2-wire
T2H*	T2V*	Proximity		●	1-color LED	2-wire
T3H*	T3V*	Proximity		●	1-color LED	3-wire
T3PH*	T3PV*	Proximity		●	1-color LED	3-wire
T2WH*	T2WV*	Proximity		●	2-color LED	2-wire
T2YH*	T2YV*	Proximity		●	2-color LED	2-wire
T3WH*	T3WV*	Proximity		●	2-color LED	3-wire
T3YH*	T3YV*	Proximity		●	2-color LED	3-wire
T2JH*	T2JV*	Proximity		●	1-color LED off-delay	2-wire
T2YD*	—	Proximity		●	2-color LED AC magnetic field	2-wire
T2YDT*	—	Proximity		●	2-color LED AC magnetic field	2-wire

*** Lead wire length**	
Blank	1 m (standard)
3	3 m (option)
5	5 m (option)

Ⓕ Switch quantity	
R	1 on rod side
H	1 on head side
D	2
T	3

Ⓖ Option		
F		End plate material (steel)
M	*3	Corrosion proof (piston rod, guide rod material: SUS) (made-to-order product)
M1	*3	Corrosion proof (piston rod, guide rod, end plate material: SUS) (made-to-order product)
P6	*4	Copper and PTFE free specification (made to order)

[Example of model No.]

STS-MC-25-50-T0H-R-F

Model: Guided cylinder, short stroke, standard/air cushioned

Ⓐ Bearing : Metal bush bearing
Ⓑ Bore size : ø25 mm
Ⓒ Port thread : M5
Ⓓ Stroke : 50 mm
Ⓔ Switch model No. : Reed switch T0H, 1 m lead wire length
Ⓕ Switch quantity : 1 on rod side
Ⓖ Option : End plate material: steel

Ⓓ Stroke

Series	Stroke (mm)		Applicable bore size					
			ø25	ø32	ø40	ø50	ø63	ø80
STS	Standard stroke	25	●	●	●	●	●	●
		50	●	●	●	●	●	●
		75						●
		100						●
	Min. stroke		15					
STL	Standard stroke	50	●	●	●	●	●	
		75	●	●	●	●	●	●
		100	●	●	●	●	●	●
		125	●	●	●	●	●	●
		150	●	●	●	●	●	●
		175	●	●	●	●	●	●
		200	●	●	●	●	●	●
		225	●	●	●	●	●	●
		250	●	●	●	●	●	●
		275	●	●	●	●	●	●
		300	●	●	●	●	●	●
		325	●	●	●	●	●	●
		350	●	●	●	●	●	●
		375	●	●	●	●	●	●
		400	●	●	●	●	●	
	Min. stroke		30					55

Note: Custom stroke is available as made to order.

How to order switch

SW - T0V

Switch model No.
(Item Ⓔ on page 494)

LCM
LCR
LCG
LCW
LCX
STM
STG
STS/STL
STR2
UCA2
ULK*
JSK/M2
JSG
JSC3/JSC4
USSD
UFCD
USC
UB
JSB3
LMB
LML
HCM
HCA
LBC
CAC4
UCAC2
CAC-N
UCAC-N
RCS2
RCC2
PCC
SHC
MCP
GLC
MFC
BBS
RRC
GRC
RV3*
NHS
HRL
LN
Hand
Chuk
MecHnd/Chuk
ShkAbs
FJ
FK
SpdContr
Ending

Internal structure and parts list

● With air cushion
STS-$^{M}_{B}$C

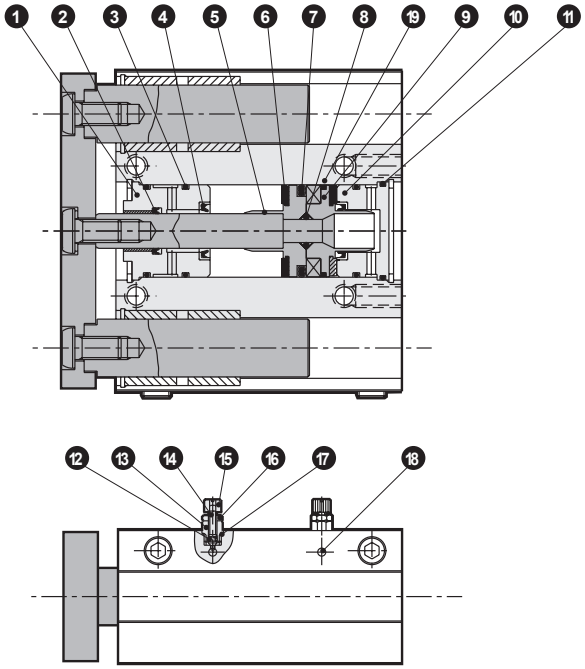

● With air cushion
STL-$^{M}_{B}$C

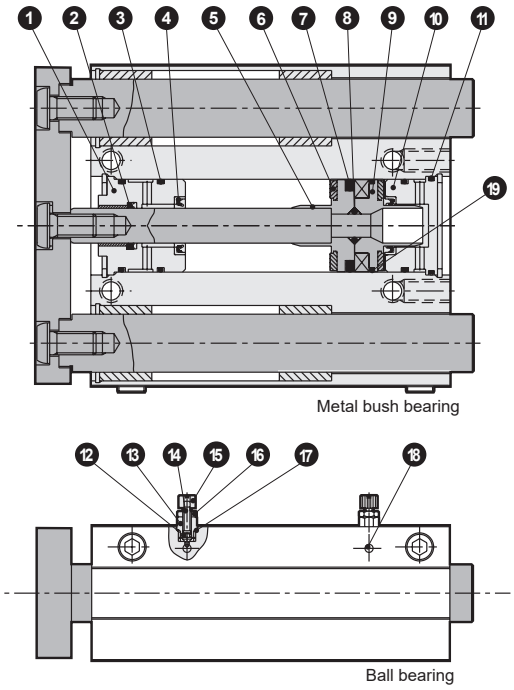

Parts list (Parts not listed below are the same as those of the double acting/standard single rod. Refer to pages 453 to 457.)

No.	Part name	Material	Remarks	No.	Part name	Material	Remarks
STS-$^{M}_{B}$C (air-cushioned)							
1	Rod metal	Special aluminum alloy	Alumite	10	Base plate	Aluminum alloy	Chromate
2	Rod packing	Nitrile rubber		11	O-ring	Nitrile rubber	
3	Metal gasket	Nitrile rubber		12	O-ring	Nitrile rubber	
4	Cushion packing	Nitrile rubber/steel		13	Needle holder	Aluminum alloy	
5	Piston R	Aluminum alloy		14	Needle	Stainless steel	
6	Cushion rubber	Urethane rubber		15	Knob	Aluminum alloy	
7	Piston packing	Nitrile rubber		16	Lock nut	Steel	Nickeling
8	O-ring	Nitrile rubber		17	O-ring	Nitrile rubber	
9	Piston H	Aluminum alloy		18	Steel ball	Steel	
				19	Wear ring	Acetal resin	

Repair parts list

● STS-$^{M}_{B}$C (air-cushioned)

Bore size (mm)	Kit No.	Repair parts No.
ø25	STS-C-25K	2 3 4 6 7 11 19
ø32	STS-C-32K	
ø40	STS-C-40K	
ø50	STS-C-50K	
ø63	STS-C-63K	
ø80	STS-C-80K	

Note: Specify the kit No. when placing an order.

Dimensions

CAD

● With air cushion

STS-$^{M}_{B}$C (Dimensions not listed below are the same as those of the double acting/standard single rod.)

· ø25/ø32/ø40/ø50/ø63

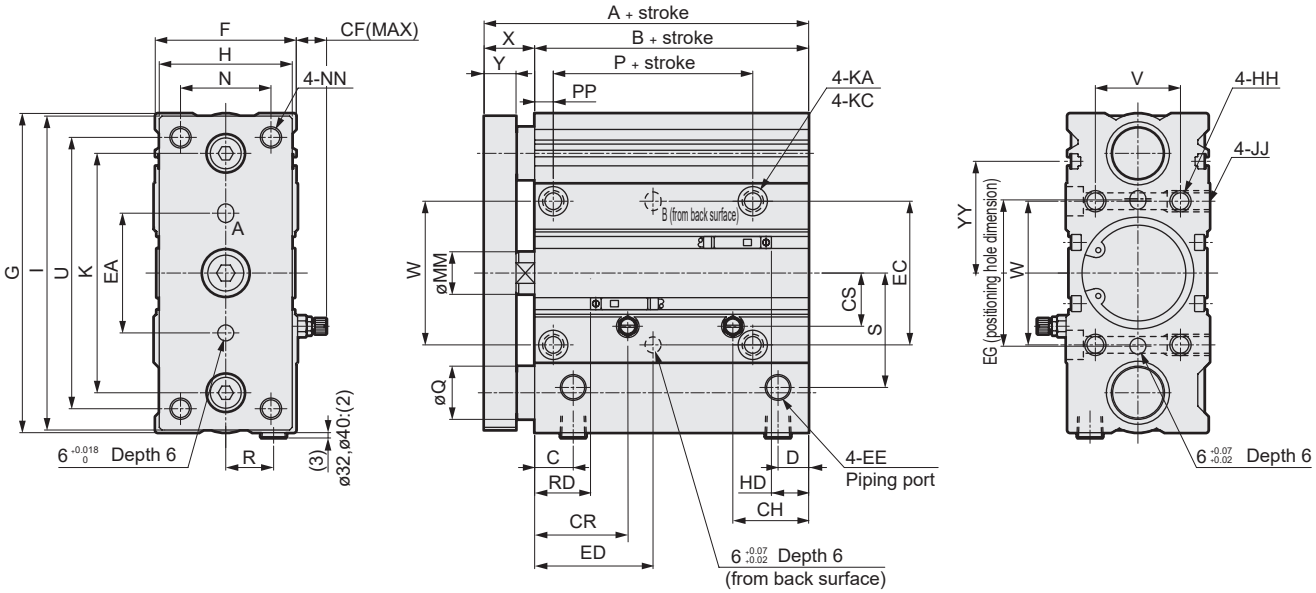

· ø80

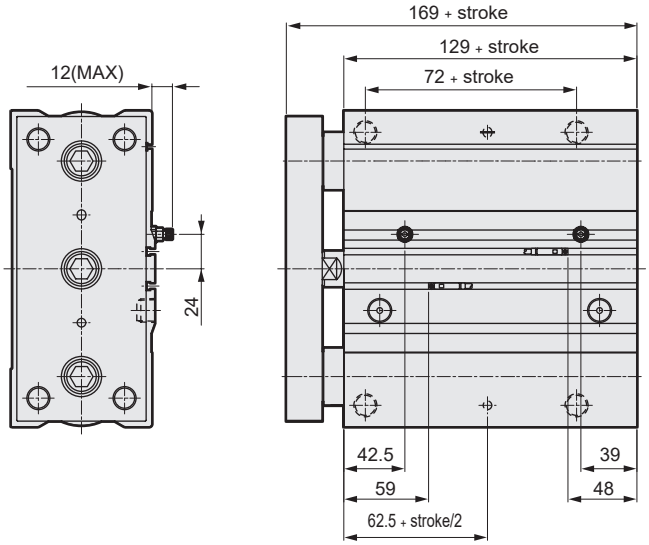

● STS-M/BC(ø25 to ø63)

Code / Bore size (mm)	A	B	C	D	EE	EA	EC	EG	ED	F	G	H	HH	I	JJ	K	KA	KC
ø25	79	66	12	9	M5×0.8	32	35	37	27+Stroke/2	42	86	38	M6 depth 12	84	M6 depth 12	63	5.2 through	9.5 spot face depth 5.4
ø32	93	74	14	10.5	Rc1/8	42	45	46	30+Stroke/2	47	111	45	M8 depth 16	109	M8 depth 16	81	6.3 through	11 spot face depth 6.5
ø40	97	78	14.5	11.5	Rc1/8	45	54	55	32+Stroke/2	54	120	50	M8 depth 16	118	M8 depth 16	90	6.3 through	11 spot face depth 6.5
ø50	102	80	16	12.5	Rc1/4	55	66	69	32+Stroke/2	66	147	64	M10 depth 20	145	M10 depth 20	110	8.6 through	14 spot face depth 8.6
ø63	108	86	12.5	17.5	Rc1/4	62	79	82	35+Stroke/2	79	162	75	M10 depth 20	160	M10 depth 20	124	8.6 through	14 spot face depth 8.6

Code / Bore size (mm)	MM	N	NN	P	PP	Q		R	S	U	V	W	X	Y	YY	CF	CH	CR	CS	T0/T5/T2/T3		T2W/T3W	
						STS-M	STS-B													HD	RD	HD	RD
ø25	12	26	M6 through	45	6	14	12	14	26	72	24	35	13 0 -2	9	27	15	24.5	27	25	19	28	29.5	21
ø32	16	29	M8 through	47	7	20	16	16	39	93	25	45	19 0 -2	12	39	14	28	33	34	21.5	34.5	36	22
ø40	16	34	M8 through	50	7	20	16	18	43	102	32	54	19 0 -2	12	42	14	29	35	20	22	38	40	24
ø50	20	44	M10 through	51	8	25	20	22	49	125	38	66	22 0 -2	16	45	17	29	36	23	24.5	38.5	40	24.5
ø63	20	55	M10 through	51	8	25	20	26	56	140	50	79	22 0 -2	16	52	17	29	41.5	25	26	44	45.5	27.5

*1 : The custom stroke is available in 1 mm increments. (Made to order)

*2 : Refer to pages 552 and 553 for RD, HD and protruding dimensions of the 2-color LED (except for T2WH/V and T3WH/V), off-delay, AC magnetic field proof, T1H/V and T8H/V switches.

*3 : Port plug of ø25 is hexagonal.

LCM
LCR
LCG
LCW
LCX
STM
STG
STS/STL
STR2
UCA2
ULK*
JSK/M2
JSG
JSC3/JSC4
USSD
UFCD
USC
UB
JSB3
LMB
LML
HCM
HCA
LBC
CAC4
UCAC2
CAC-N
UCAC-N
RCS2
RCC2
PCC
SHC
MCP
GLC
MFC
BBS
RRC
GRC
RV3*
NHS
HRL
LN
Hand
Chuk
MecHnd/Chuk
ShkAbs
FJ
FK
SpdContr
Ending

Dimensions

CAD

● Air cushion

STL-$^{M}_{B}$C (Dimensions not listed below are the same as those of the double acting/standard single rod.)

· ø25/ø32/ø40/ø50/ø63

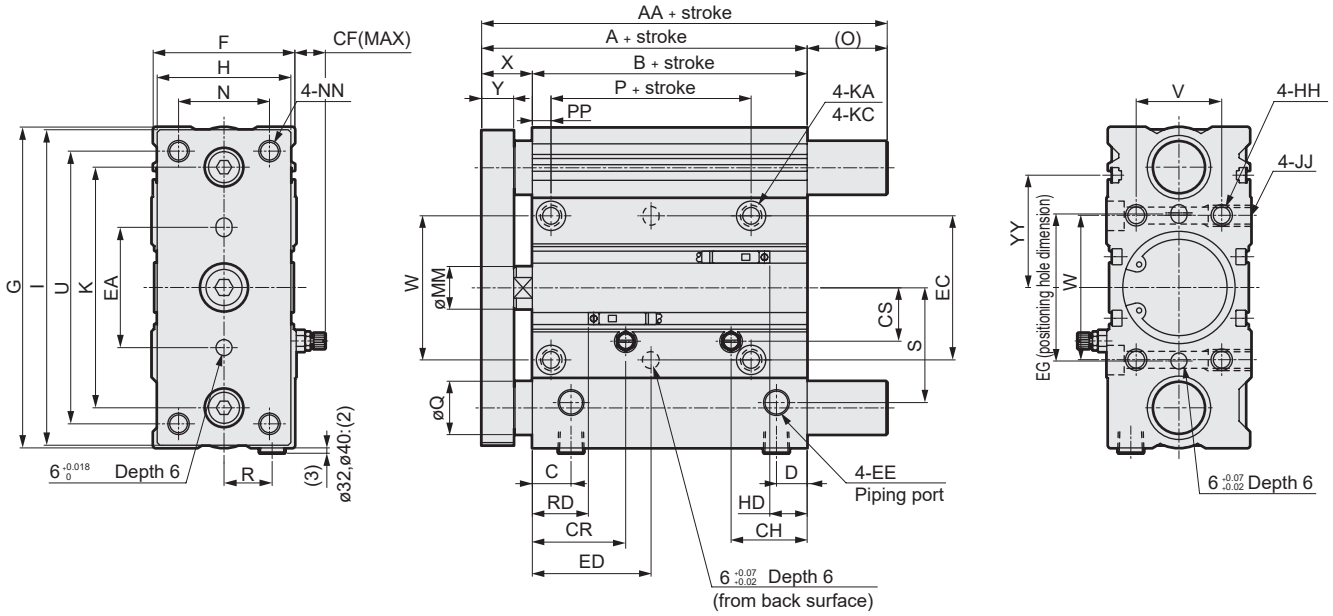

· ø80

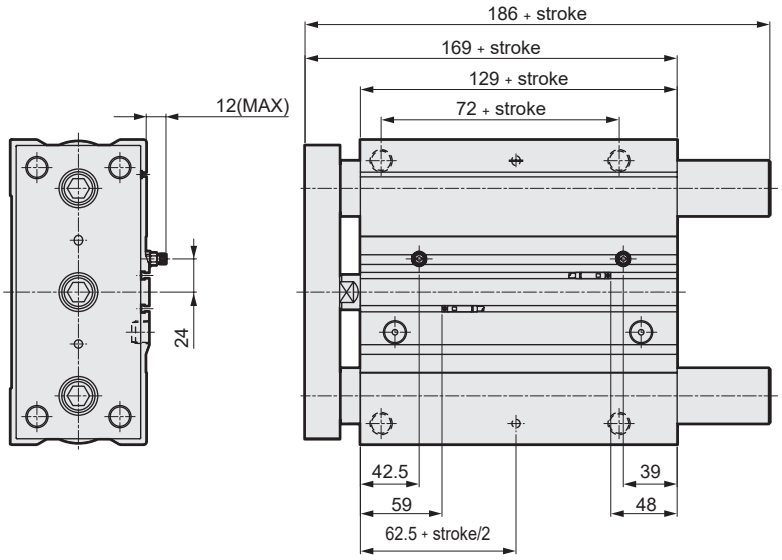

● STL-M/BC(ø25 to ø63)

Code / Bore size (mm)	A	AA	B	C	D	EE	EA	EC	EG	ED	F	G	H	HH	I	JJ	K	KA	KC
ø25	79	79	66	12	9	M5×0.8	32	35	37	27+Stroke/2	42	86	38	M6 depth 12	84	M6 depth 12	63	5.2 through	9.5 spot face depth 5.4
ø32	93	102	74	14	10.5	Rc1/8	42	45	46	30+Stroke/2	47	111	45	M8 depth 16	109	M8 depth 16	81	6.3 through	11 spot face depth 6.5
ø40	97	102	78	14.5	11.5	Rc1/8	45	54	55	32+Stroke/2	54	120	50	M8 depth 16	118	M8 depth 16	90	6.3 through	11 spot face depth 6.5
ø50	102	125	80	16	12.5	Rc1/4	55	66	69	32+Stroke/2	66	147	64	M10 depth 20	145	M10 depth 20	110	8.6 through	14 spot face depth 8.6
ø63	108	125	86	12.5	17.5	Rc1/4	62	79	82	35+Stroke/2	79	162	75	M10 depth 20	160	M10 depth 20	124	8.6 through	14 spot face depth 8.6

Code / Bore size (mm)	MM	N	NN	O	P	PP	Q STL-M	Q STL-B	R	S	U	V	W	X	Y	YY	CF	CH	CR	CS	T0/T5/T2/T3 HD	T0/T5/T2/T3 RD	T2W/T3W HD	T2W/T3W RD
ø25	12	26	M6 through	0	45	6	14	12	14	26	72	24	35	13 -0 -2	9	27	15	24.5	27	25	19	28	29.5	21
ø32	16	29	M8 through	9	47	7	20	16	16	39	93	25	45	19 -0 -2	12	39	14	28	33	34	21.5	34.5	36	22
ø40	16	34	M8 through	5	50	7	20	16	18	43	102	32	54	19 -0 -2	12	42	14	29	35	20	22	38	40	24
ø50	20	44	M10 through	23	51	8	25	20	22	49	125	38	66	22 -0 -2	16	45	17	29	36	23	24.5	38.5	40	24.5
ø63	20	55	M10 through	17	51	8	25	20	26	56	140	50	79	22 -0 -2	16	52	17	29	41.5	25	26	44	45.5	27.5

*1 : The custom stroke is available in 1 mm increments. (Made to order)

*2 : Refer to pages 552 and 553 for RD, HD and protruding dimensions of the 2-color LED (except for T2WH/V and T3WH/V), off-delay, AC magnetic field proof, T1H/V and T8H/V switches.

*3 : Port plug of ø25 is hexagonal.

MEMO

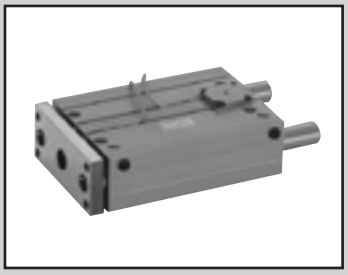

Guided cylinder, double acting/position locking

STS/STL-$^{M}_{B}$Q Series

● Bore size: ø20/ø25/ø32/ø40/ø50/ø63/ø80

JIS symbol 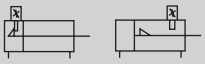

RoHS CAD

Specifications

Item	STS-MQ/BQ, STL-MQ/BQ						
Bore size mm	ø20	ø25	ø32	ø40	ø50	ø63	ø80
Actuation	Double acting/position locking						
Working fluid	Compressed air						
Max. working pressure MPa	1.0 (≈150 psi, 10 bar)						
Min. working pressure MPa	0.2 (≈29 psi, 2 bar)		0.15 (≈22 psi, 1.5 bar)				
Proof pressure MPa	1.6 (≈230 psi, 16 bar)						
Ambient temperature °C	-10 (14°F) to 60 (140°F) (no freezing)						
Port size	M5		Rc1/8		Rc1/4		Rc3/8
Stroke tolerance mm	$^{+2.0}_{0}$						
Working piston speed mm/s	50 to 500					50 to 300	
Cushion	With rubber cushion						
Position locking mechanism	Rod side or head side						
Holding force N	Max. thrust x 0.7						
Lubrication	Not required (use turbine oil class 1 ISO VG32 if necessary for lubrication)						
Allowable absorbed energy J	0.157	0.157	0.401	0.627	0.980	1.560	2.510

Stroke

· Short stroke STS

Bore size (mm)	Standard stroke (mm)	Max. stroke (mm)	Min. stroke (mm)	Min. stroke with switch (mm)
ø20	25, 50	50	5	5 With one or two switches
ø25				
ø32				
ø40				
ø50				
ø63				
ø80	25, 50, 75, 100	100		

· Long stroke STL

Bore size (mm)	Standard stroke (mm)	Max. stroke (mm)	Min. stroke (mm)	Min. stroke with switch (mm)
ø20	50, 75, 100, 125, 150, 175 200, 225, 250, 275, 300 325, 350, 375, 400	400	30	30 With one or two switches
ø25				
ø32				
ø40	50, 75, 100, 125, 150, 175 200, 225, 250, 275, 300 325, 350, 375	375		
ø50				
ø63				
ø80	75, 100, 125, 150, 175 200, 225, 250, 275, 300 325, 350	350	55	55 With one or two switches

Note: The custom stroke is available in 5 mm increments.
However, the total length is the same as that of the next longer standard stroke.

⚠Be sure to read the “Safety precautions” Position locking on pages 570 to 573 before use.

Switch specifications

● 1-color/2-color LED/exchangeMagnetic fieldfor

Item	Proximity 2-wire	Proximity 2-wire			Proximity 3-wire				Reed 2-wire							Proximity 2-wire
	T1H/ T1V	T2H/T2V/ T2JH/T2JV	T2YH/ T2YV	T2WH/ T2WV	T3H/ T3V	T3PH/ T3PV	T3YH/ T3YV	T3WH/ T3WV	T0H/T0V		T5H/T5V		T8H/T8V			T2YD(*4) T2YDT
Applications	For programmable controller, relay, compact solenoid valve	Dedicated for programmable controller			For programmable controller, relay				For programmable controller, relay		For programmable controller, relay, IC circuit (no indicator lamp), serial connection		For programmable controller, relay			For programmable controller
Output method	-				NPN output	PNP output	NPN output	NPN output	-							
Pwr. supp. V.	-				10 to 28 VDC				-							
Load voltage	85 to 265 VAC	10 to 30 VDC		24 VDC ±10%	30 VDC or less				12/24 VDC	100/110 VAC	5/12/24 VDC	100/110 VAC	12/24 VDC	110 VAC	220 VAC	24 VDC ±10%
Load current	5~100mA	5 to 20 mA (*3)			100 mA or less		50 mA or less		5~50mA	7~20mA	50 mA or less	20 mA or less	5~50mA	7~20mA	7~10mA	5 to 20mA
Indicator lamp	LED (Lit when ON)	LED (Lit when ON)	Red/green LED (Lit when ON)	Red/green LED (Lit when ON)	LED (Lit when ON)	Yellow LED (Lit when ON)	Red/green LED (Lit when ON)	Red/green LED (Lit when ON)	LED (Lit when ON)		No indicator lamp		LED (Lit when ON)			Red/green LED (Lit when ON)
Leakage current	1 mA or less with 100 VAC, 2 mA or less with 200 VAC	1 mA or less			10 μA or less				0mA							1 mA or less
Weight g	1 m: 33 3 m: 87 5 m: 142	1 m: 18 3 m: 49 5 m: 80	1 m: 33 3 m: 87 5 m: 142	1 m: 18 3 m: 49 5 m: 80	1 m: 18 3 m: 49 5 m: 80		1 m: 33 3 m: 87 5 m: 142	1 m: 18 3 m: 49 5 m: 80	1 m: 18 3 m: 49 5 m: 80				1 m: 33 3 m: 87 5 m: 142			1 m: 61 3 m: 166 5 m: 272

*1: Refer to Ending Page 1 for detailed switch specifications and dimensions.
*2: Switches other than the above models, such as switches with connectors, are also available. Refer to Ending Page 1.
*3: The max. load current is 20 mA at 25°C. The current is lower than 20 mA if the operating ambient temperature around the switch is higher than 25˚C. (5 to 10 mA at 60°C)
*4: AC magnetic field proof switch (T2YD/T2YDT) cannot be used in DC magnetic fields.

Theoretical thrust table

(Unit: N)

Bore size (mm)	Operating direction	Working pressure MPa									
		0.15	0.2	0.3	0.4	0.5	0.6	0.7	0.8	0.9	1.0
ø20	Push	-	62.8	94.2	1.26×10^2	1.57×10^2	1.88×10^2	2.20×10^2	2.51×10^2	2.83×10^2	3.14×10^2
	Pull	-	47.1	70.7	94.2	1.18×10^2	1.41×10^2	1.65×10^2	1.88×10^2	2.12×10^2	2.36×10^2
ø25	Push	-	98.2	1.47×10^2	1.96×10^2	2.45×10^2	2.95×10^2	3.44×10^2	3.93×10^2	4.42×10^2	4.91×10^2
	Pull	-	75.6	1.13×10^2	1.51×10^2	1.89×10^2	2.27×10^2	2.64×10^2	3.02×10^2	3.40×10^2	3.78×10^2
ø32	Push	1.21×10^2	1.61×10^2	2.41×10^2	3.22×10^2	4.02×10^2	4.83×10^2	5.63×10^2	6.43×10^2	7.24×10^2	8.04×10^2
	Pull	90.5	1.21×10^2	1.81×10^2	2.41×10^2	3.02×10^2	3.62×10^2	4.22×10^2	4.83×10^2	5.43×10^2	6.03×10^2
ø40	Push	1.88×10^2	2.51×10^2	3.77×10^2	5.03×10^2	6.28×10^2	7.54×10^2	8.80×10^2	1.01×10^3	1.13×10^3	1.26×10^3
	Pull	1.58×10^2	2.11×10^2	3.17×10^2	4.22×10^2	5.28×10^2	6.33×10^2	7.39×10^2	8.44×10^2	9.50×10^2	1.06×10^3
ø50	Push	2.95×10^2	3.93×10^2	5.89×10^2	7.85×10^2	9.82×10^2	1.18×10^3	1.37×10^3	1.57×10^3	1.77×10^3	1.96×10^3
	Pull	2.47×10^2	3.30×10^2	4.95×10^2	6.60×10^2	8.25×10^2	9.90×10^2	1.15×10^3	1.32×10^3	1.48×10^3	1.65×10^3
ø63	Push	4.68×10^2	6.23×10^2	9.35×10^2	1.25×10^3	1.56×10^3	1.87×10^3	2.18×10^3	2.49×10^3	2.81×10^3	3.12×10^3
	Pull	4.20×10^2	5.61×10^2	8.41×10^2	1.12×10^3	1.40×10^3	1.68×10^3	1.96×10^3	2.24×10^3	2.52×10^3	2.80×10^3
ø80	Push	7.54×10^2	1.01×10^3	1.51×10^3	2.01×10^3	2.51×10^3	3.02×10^3	3.52×10^3	4.02×10^3	4.52×10^3	5.03×10^3
	Pull	6.80×10^2	9.07×10^2	1.36×10^3	1.81×10^3	2.27×10^3	2.72×10^3	3.17×10^3	3.63×10^3	4.08×10^3	4.54×10^3

For cylinder weight, refer to pages 558 to 561.

How to order

● Short stroke

Without switch (built-in magnet for switch)

STS - M Q - 20 ( ) - 25 - H ——— F

With switch (built-in magnet for switch)

STS - M Q - 20 ( ) - 25 - H - T2H - R - F

● Long stroke

Without switch (built-in magnet for switch)

STL - M Q - 20 ( ) - 50 - H ——— F

With switch (built-in magnet for switch)

STL - M Q - 20 ( ) - 50 - H - T2H - R - F

Ⓐ Bearing
Ⓑ Bore size
Ⓒ Port thread
Ⓓ Stroke
Ⓔ Position locking mechanism
Ⓕ Switch model No.
*1
*3
*4
Ⓖ Switch quantity
Ⓗ Option

■ The custom stroke is available in 5 mm increments. However, the total length is the same as that of the next longer standard stroke.

For the 2-color LED, T1H/V and AC magnetic field proof switches for ø40 and over, insert "L1" with "-" between Items Ⓐ and Ⓑ.
(Example) STS-MQ-L1-63-50-T2YH3-D-F
For ø80, the 2-color LED, T1H/V and AC magnetic field proof switches cannot be retrofitted on a previously purchased standard product.
In this case, order the model No. with "L1" inserted between Ⓐ and Ⓑ.
(Example) STS-MQ-L1-80-50-F

⚠ Precautions for model No. selection

*1 : Switches other than Ⓕ Switch model No. are also available. (Made-to-order product)
Refer to Ending Page 1 for details.
*2 : Refer to pages 444 to 447 for combinations of variations/options.
*3 : In some cases, a switch cannot be inserted from the rod side of the head side position locking of 25 mm stroke or less.
In this case, temporarily remove the end plate and install the switch.
Contact CKD to inquire about the removal and assembling method of the end plate.
*4 : Switches are shipped with the product. Contact CKD if assembling before shipment is necessary.
*5 : Refer to page 458 for material details.
*6 : ø20 and ø25 with ball bearing B are copper and PTFE free as standard.

[Example of model No.]

STS-MQ-20-25-H-T0H-R-F

Model: Guided cylinder, short stroke, position locking

Ⓐ Bearing	: Metal bush bearing
Ⓑ Bore size	: ø20 mm
Ⓒ Port thread	: M5
Ⓓ Stroke	: 25 mm
Ⓔ Position locking mechanism	: With head side position locking
Ⓕ Switch model No.	: Reed switch T0H, 1 m lead wire length
Ⓖ Switch quantity	: 1 on rod side
Ⓗ Option	: End plate material: steel

Code	Description
Ⓐ Bearing	
M	Metal bush bearing
B	Ball bearing
Ⓑ Bore size (mm)	
20	ø20
25	ø25
32	ø32
40	ø40
50	ø50
63	ø63
80	ø80
Ⓒ Port thread	
Blank	M5 (ø20, ø25)
	Rc thread (ø32 to ø80)
NN	NPT thread (ø32 and over) made-to-order product
GN	G thread (ø32 and over) made-to-order product
Ⓓ Stroke (mm)	
Refer to the stroke table on the following page.	
Ⓔ Position locking mechanism	
H	Head side position locking mechanism
R	Rod side position locking mechanism

Ⓕ Switch model No.

Straight lead wire	L-shaped lead wire	Contact	Voltage AC	Voltage DC	Indicator	Lead wire
T0H*	**T0V***	Reed	●	●	1-color LED	2-wire
T5H*	**T5V***	Reed	●	●	no indicator lamp	2-wire
T1H*	**T1V***	Proximity	●		1-color LED	2-wire
T2H*	**T2V***	Proximity		●	1-color LED	2-wire
T3H*	**T3V***	Proximity		●	1-color LED	3-wire
T3PH*	**T3PV***	Proximity		●	1-color LED	3-wire
T2WH*	**T2WV***	Proximity		●	2-color LED	2-wire
T2YH*	**T2YV***	Proximity		●	2-color LED	2-wire
T3WH*	**T3WV***	Proximity		●	2-color LED	3-wire
T3YH*	**T3YV***	Proximity		●	2-color LED	3-wire
T2JH*	**T2JV***	Proximity		●	1-color LED off-delay	2-wire
T2YD*	**-**	Proximity		●	2-color LED (AC magnetic field)	2-wire
T2YDT*	**-**	Proximity		●	2-color LED (AC magnetic field)	2-wire

*** Lead wire length**	
Blank	1 m (standard)
3	3 m (option)
5	5 m (option)
Ⓖ Switch quantity	
R	1 on rod side
H	1 on head side
D	2
T	3
Ⓗ Option	
F	End plate material (steel)
M *5	Corrosion proof (Piston rod and guide rod material: SUS) (made-to-order product)
M1 *5	Corrosion proof (Piston rod, guide rod and end plate material: SUS) (made to order)
P6 *6	Copper/PTFE free specs (made to order)

Ⓓ Stroke

Series	Stroke (mm)		Applicable bore size						
			ø20	ø25	ø32	ø40	ø50	ø63	ø80
STS	Standard stroke	25	●	●	●	●	●	●	●
		50	●	●	●	●	●	●	●
		75							●
		100							●
	Min. stroke	*1	5						
	Custom stroke	*1, 2	In 5 mm increments						
STL	Standard stroke	50	●	●	●	●	●	●	
		75	●	●	●	●	●	●	●
		100	●	●	●	●	●	●	●
		125	●	●	●	●	●	●	●
		150	●	●	●	●	●	●	●
		175	●	●	●	●	●	●	●
		200	●	●	●	●	●	●	●
		225	●	●	●	●	●	●	●
		250	●	●	●	●	●	●	●
		275	●	●	●	●	●	●	●
		300	●	●	●	●	●	●	●
		325	●	●	●	●	●	●	●
		350	●	●	●	●	●	●	●
		375	●	●	●	●	●	●	
		400	●	●	●				
	Min. stroke	*1	30						55
	Custom stroke	*1, 2	In 5 mm increments						

*1: The total dimensions are the same as the longer standard stroke.
*2: Special total length for custom stroke can be provided when a custom stroke is used. (Made to order)

How to order switch

SW - T0V

Switch model No.
(Item Ⓕ on page 502)

LCM
LCR
LCG
LCW
LCX
STM
STG
STS/STL
STR2
UCA2
ULK*
JSK/M2
JSG
JSC3/JSC4
USSD
UFCD
USC
UB
JSB3
LMB
LML
HCM
HCA
LBC
CAC4
UCAC2
CAC-N
UCAC-N
RCS2
RCC2
PCC
SHC
MCP
GLC
MFC
BBS
RRC
GRC
RV3*
NHS
HRL
LN
Hand
Chuk
MecHnd/Chuk
ShkAbs
FJ
FK
SpdContr
Ending

Internal structure and parts list

● Position locking/head side

STS-$^{M}_{B}$Q-H

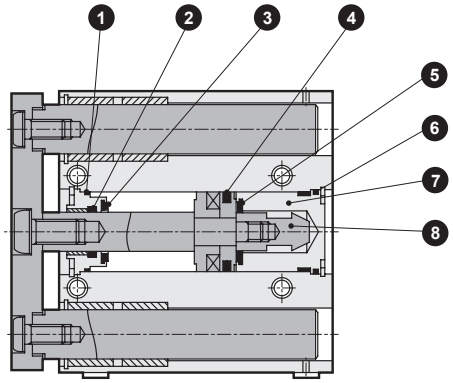

Metal bush bearing

STL-$^{M}_{B}$Q-H

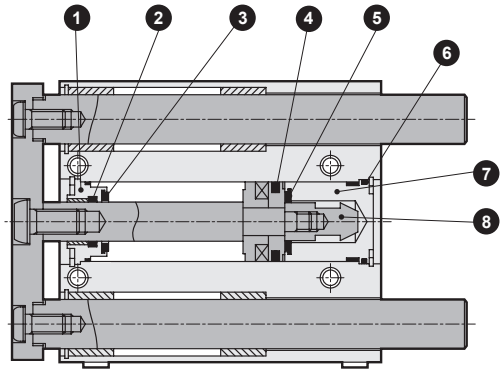

Metal bush bearing

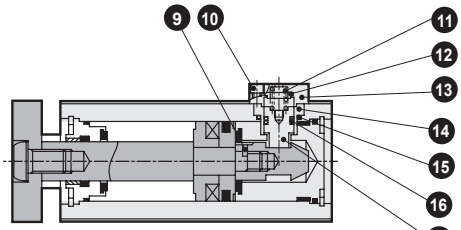

Ball bearing

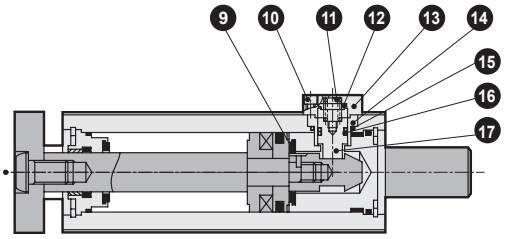

Ball bearing

● Position locking/rod side

STS-$^{M}_{B}$Q-R

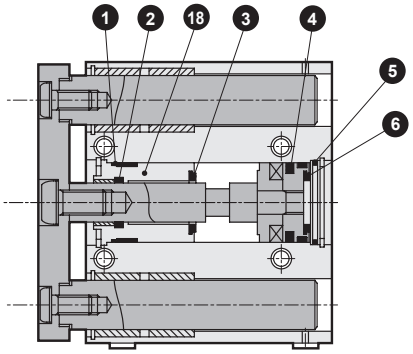

Metal bush bearing

STL-$^{M}_{B}$Q-R

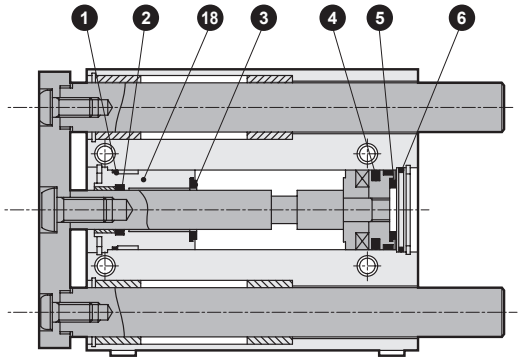

Metal bush bearing

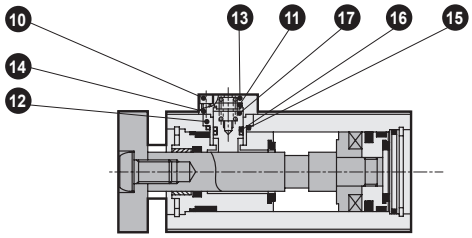

Ball bearing

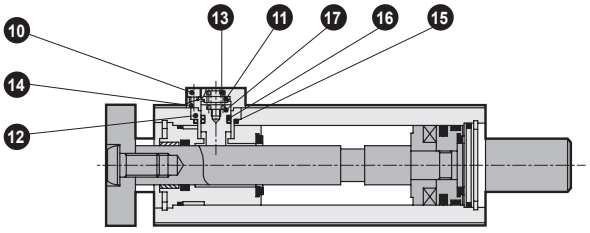

Ball bearing

Parts list (Parts not listed below are the same as those of the double acting/standard single rod. Refer to pages 453 to 457.)

No.	Part name	Material	Remarks
ST$^{S}_{L}$-$^{M}_{B}$Q-H (position locking/head side)			
1	Metal gasket	Nitrile rubber	
2	Rod packing	Nitrile rubber	
3	Cushion rubber (R)	Urethane rubber	
4	Piston packing	Nitrile rubber	
5	Cushion rubber (H)	Urethane rubber	
6	O-ring	Nitrile rubber	
7	Head cover	Aluminum alloy	
8	Sleeve	Steel	Nitriding
9	Spring pin	Steel	Black finish
10	Hexagon socket head cap screw	Alloy steel	Zinc chromate
11	Coil spring	Steel	Electrodeposition
12	Cushion rubber	Urethane rubber	
13	Stopper cover	Aluminum alloy	Alumite
14	Stopper housing	Aluminum alloy	Alumite
15	O-ring	Nitrile rubber	
16	Stopper packing	Nitrile rubber	
17	Stopper piston	Steel	Nitriding

No.	Part name	Material	Remarks
ST$^{S}_{L}$-$^{M}_{B}$Q-R (position locking/rod side)			
1	Metal gasket	Nitrile rubber	
2	Rod packing	Nitrile rubber	
3	Cushion rubber (R)	Urethane rubber	
4	Piston packing	Nitrile rubber	
5	Cushion rubber (H)	Urethane rubber	
6	O-ring	Nitrile rubber	
10	Hexagon socket head cap screw	Alloy steel	Zinc chromate
11	Coil spring	Steel	Electrodeposition
12	Cushion rubber	Urethane rubber	
13	Stopper cover	Aluminum alloy	Alumite
14	Stopper housing	Aluminum alloy	Alumite
15	O-ring	Nitrile rubber	
16	Stopper packing	Nitrile rubber	
17	Stopper piston	Stainless steel	
18	Rod cover	Aluminum alloy	Alumite

Repair parts list

● ST$^{S}_{L}$-$^{M}_{B}$Q (position locking)

Bore size (mm)	Kit No.	Repair parts No.
ø20	STS-Q-H-20K STS-Q-R-20K	❶ ❷ ❸ ❹ ❺ ❻ ⓬ ⓯ ⓰
ø25	STS-Q-H-25K STS-Q-R-25K	
ø32	STS-Q-32K	
ø40	STS-Q-40K	
ø50	STS-Q-50K	
ø63	STS-Q-63K	
ø80	STS-Q-80K	

Note: Specify the kit No. when placing an order.
The kit No. of ø20 and ø25 differs depending on the side of position locking.

LCM
LCR
LCG
LCW
LCX
STM
STG
STS/STL
STR2
UCA2
ULK*
JSK/M2
JSG
JSC3/JSC4
USSD
UFCD
USC
UB
JSB3
LMB
LML
HCM
HCA
LBC
CAC4
UCAC2
CAC-N
UCAC-N
RCS2
RCC2
PCC
SHC
MCP
GLC
MFC
BBS
RRC
GRC
RV3*
NHS
HRL
LN
Hand
Chuk
MecHnd/Chuk
ShkAbs
FJ
FK
SpdContr
Ending

Dimensions: ø20, ø25

● Position locking/head side (Dimensions not listed below are the same as those of the double acting/single rod)

STS-$^{M}_{B}$Q-H

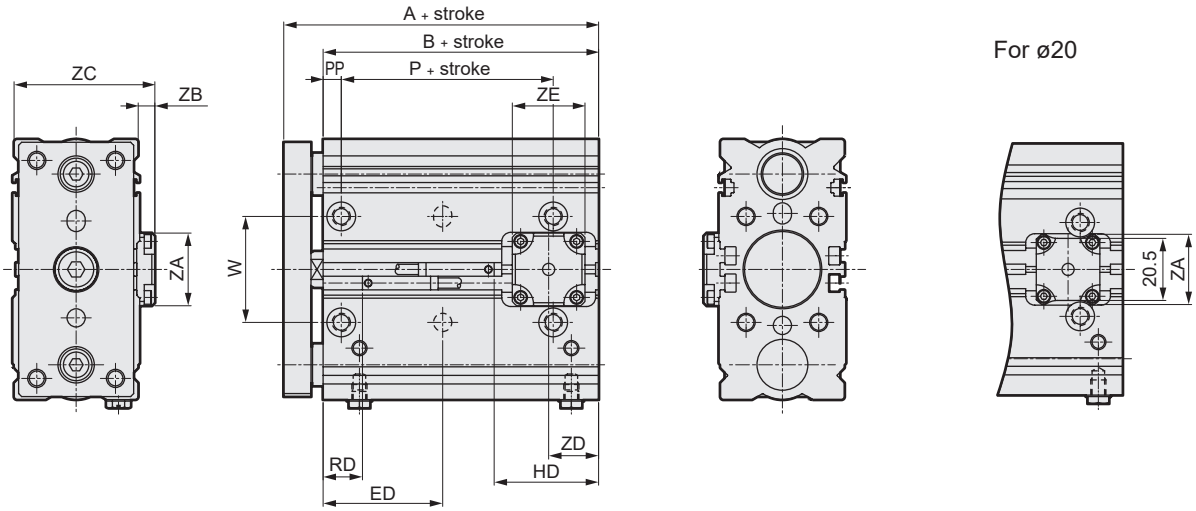

● Position locking/rod side (Dimensions not listed below are the same as those of the double acting/single rod)

STS-$^{M}_{B}$Q-R

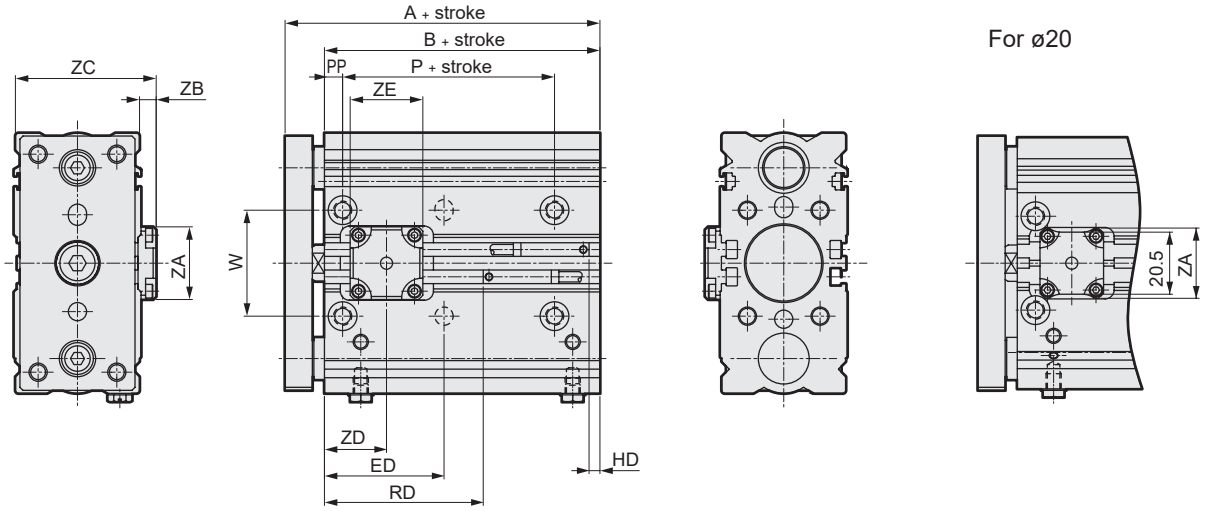

Code / Bore size (mm)	A	B	EA	EC	EG	ED	P	PP	W	ZA	ZB	ZC	ZE	STS-$^{M}_{B}$Q-H ZD	STS-$^{M}_{B}$Q-H T0/T5/T2/T3 RD	STS-$^{M}_{B}$Q-H T0/T5/T2/T3 HD	STS-$^{M}_{B}$Q-H T2W/T3W RD	STS-$^{M}_{B}$Q-H T2W/T3W HD	STS-$^{M}_{B}$Q-R ZD	STS-$^{M}_{B}$Q-R T0/T5/T2/T3 RD	STS-$^{M}_{B}$Q-R T0/T5/T2/T3 HD	STS-$^{M}_{B}$Q-R T2W/T3W RD	STS-$^{M}_{B}$Q-R T2W/T3W HD
ø20	78	65	30	31	33	$26.5+\frac{Stroke}{2}$	45	6	31	23.2	6	44	21	18	12	34.5	12.5	37.5	20	37	9.5	37.5	12.5
ø25	79	66	32	35	37	$27+\frac{Stroke}{2}$	45	6	35	24	5	47	24	16.5	13	34	14.5	36	20.5	38	9	39.5	11

*1 : When using a custom stroke, the dimensions are the same as the longer standard stroke.
*2 : Refer to pages 552 and 553 for RD, HD and protruding dimensions of the 2-color LED (except for T2WH/V and T3WH/V), off-delay, AC magnetic field proof and T1H/V switches.

Dimensions: ø32/ø40/ø50/ø63

CAD

● Position locking/head side (Dimensions not listed below are the same as those of the double acting/single rod)
STS-$^{M}_{B}$Q-H

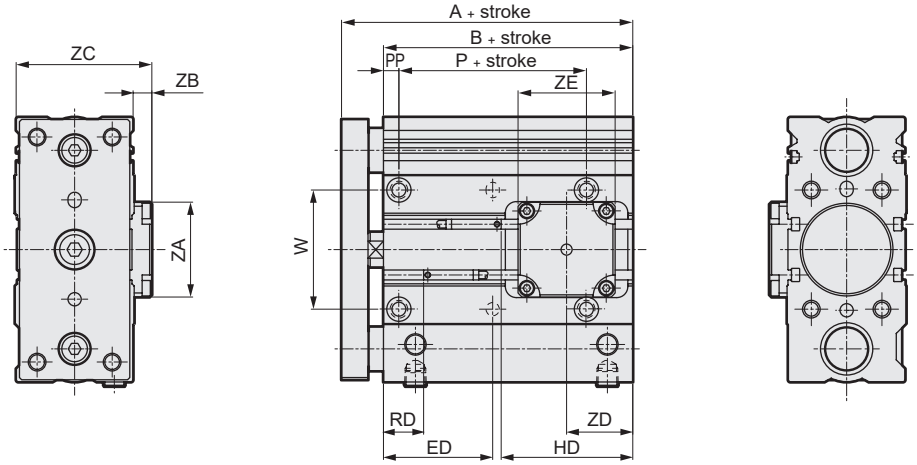

● Position locking/rod side (Dimensions not listed below are the same as those of the double acting/single rod)
STS-$^{M}_{B}$Q-R

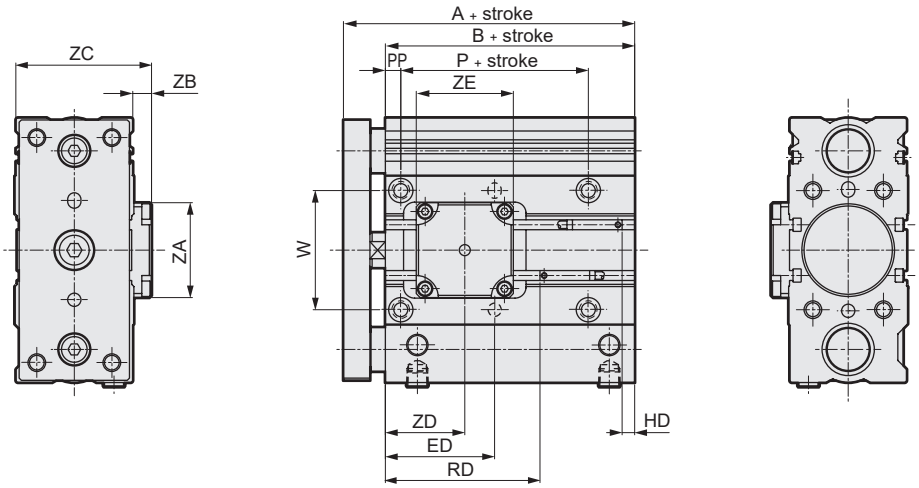

Code / Bore size (mm)	A	B	EA	EC	EG	ED	P	PP	W	ZA	ZB	ZC	ZE	STS-$^{M}_{B}$Q-H ZD	T0/T5/T2/T3 RD	T0/T5/T2/T3 HD	T2W/T3W RD	T2W/T3W HD	STS-$^{M}_{B}$Q-R ZD	T0/T5/T2/T3 RD	T0/T5/T2/T3 HD	T2W/T3W RD	T2W/T3W HD
ø32	93	74	42	45	46	$30+\frac{Stroke}{2}$	47	7	45	32	6.5	53.5	24	21	17.5	38.5	19	40	25	42.5	13.5	44	15
ø40	122	103	45	54	55	$44.5+\frac{Stroke}{2}$	75	7	54	43	8	62	44	30	21	64	22.5	66	36	71	14	72.5	16
ø50	127	105	55	66	69	$44.5+\frac{Stroke}{2}$	76	8	66	43	7.5	73.5	44	33	22	66	23.5	66.5	40	72	16	73.5	16.5
ø63	133	111	62	79	82	$47.5+\frac{Stroke}{2}$	76	8	79	47	7.5	86.5	47	35	20	73	21.5	74.5	40	70	23	71.5	24.5

*1 : When using a custom stroke, the dimensions are the same as the longer standard stroke.
*2 : Refer to pages 552 and 553 for RD, HD and protruding dimensions of the 2-color LED (except for T2WH/V and T3WH/V), off-delay, AC magnetic field proof and T1H/V switches.

LCM
LCR
LCG
LCW
LCX
STM
STG
STS/STL
STR2
UCA2
ULK*
JSK/M2
JSG
JSC3/JSC4
USSD
UFCD
USC
UB
JSB3
LMB
LML
HCM
HCA
LBC
CAC4
UCAC2
CAC-N
UCAC-N
RCS2
RCC2
PCC
SHC
MCP
GLC
MFC
BBS
RRC
GRC
RV3*
NHS
HRL
LN
Hand
Chuk
MecHnd/Chuk
ShkAbs
FJ
FK
SpdContr
Ending

Dimensions: ø80 CAD

● Position locking/head side (Dimensions not listed below are the same as those of the double acting/single rod)

STS-$^{M}_{B}$Q-H

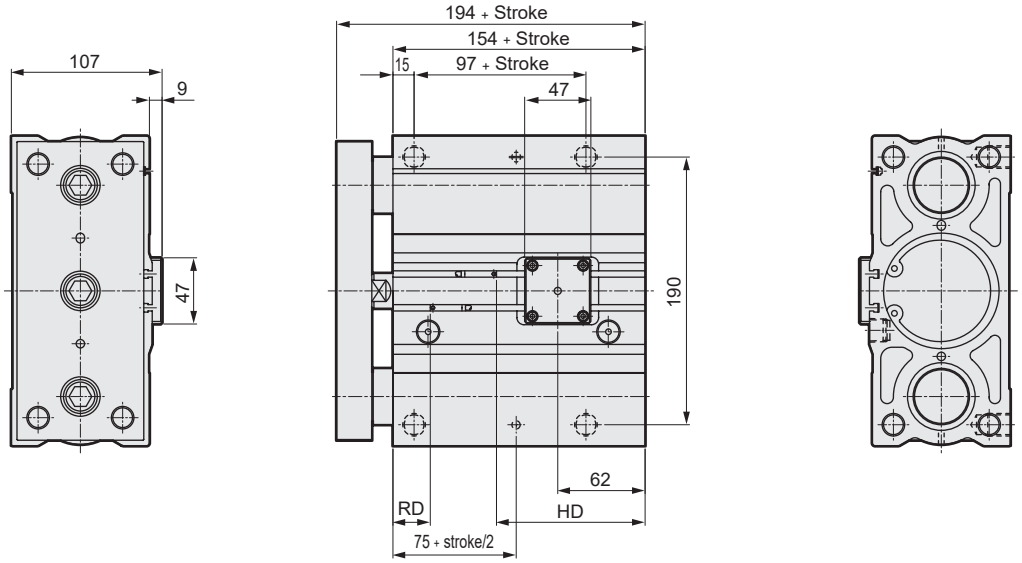

T0/T5/T2/T3		T2W/T3W	
RD	HD	RD	HD
26.5	105.5	28	110.5

● Position locking/rod side (Dimensions not listed below are the same as those of the double acting/single rod)

STS-$^{M}_{B}$Q-R

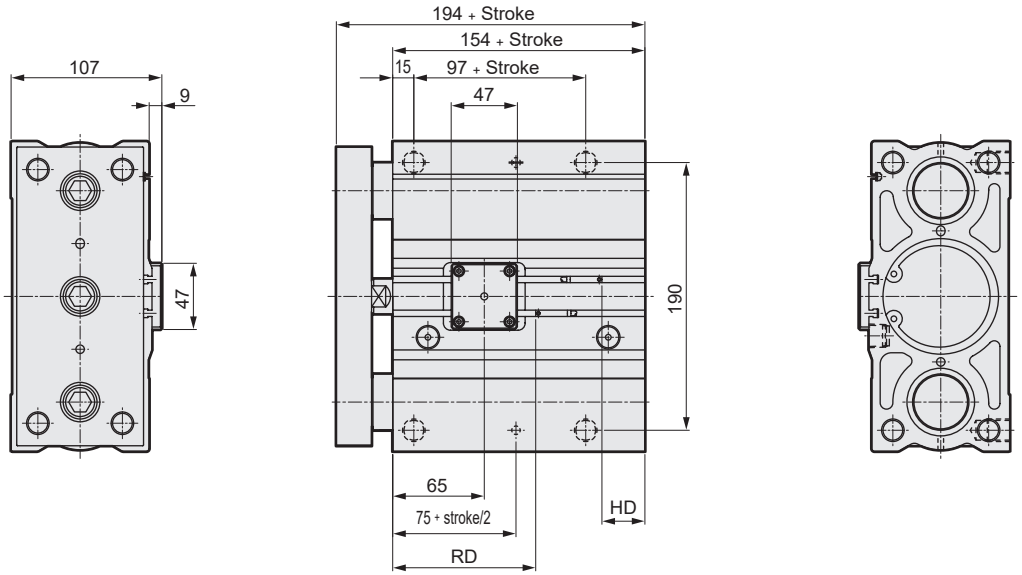

T0/T5/T2/T3		T2W/T3W	
RD	HD	RD	HD
101.5	30.5	103	35.5

*1 : When using a custom stroke, the dimensions are the same as the longer standard stroke.
*2 : Refer to pages 552 and 553 for RD, HD and protruding dimensions of the 2-color LED (except for T2WH/V and T3WH/V), off-delay, AC magnetic field proof and T1H/V switches.

Dimensions: ø20/ø25

● Position locking/head side (Dimensions not listed below are the same as those of the double acting/single rod)

STL-$^{M}_{B}$Q-H

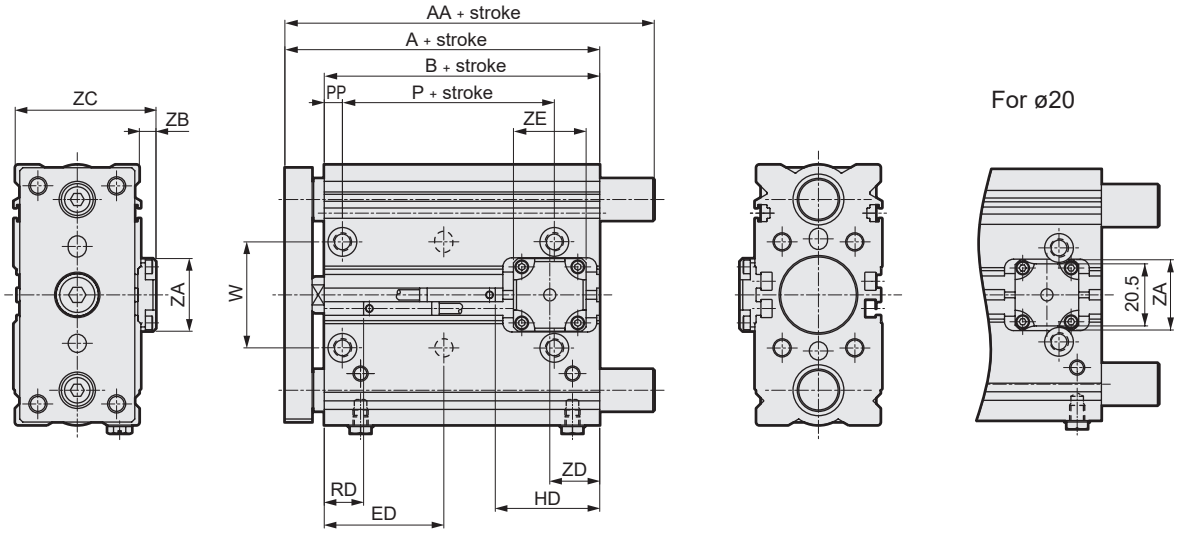

● Position locking/rod side (Dimensions not listed below are the same as those of the double acting/single rod)

STL-$^{M}_{B}$Q-R

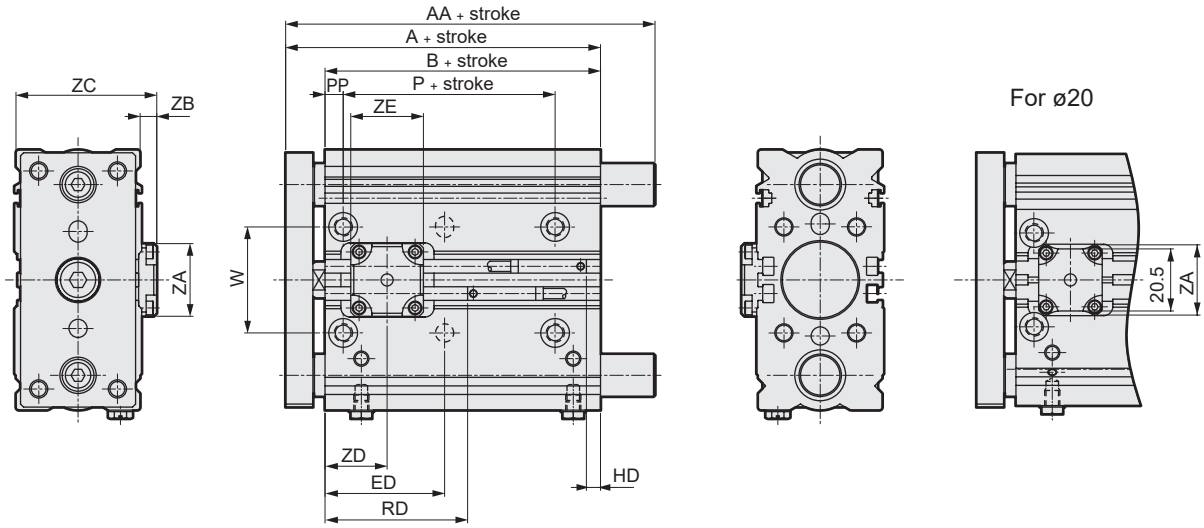

Code / Bore size (mm)	A	AA	EA	EC	EG	ED	B	P	PP	W	ZA	ZB	ZC	ZE	STL-$^{M}_{B}$Q-H ZD	STL-$^{M}_{B}$Q-H T0/T5/T2/T3 RD	STL-$^{M}_{B}$Q-H T0/T5/T2/T3 HD	STL-$^{M}_{B}$Q-H T2W/T3W RD	STL-$^{M}_{B}$Q-H T2W/T3W HD	STL-$^{M}_{B}$Q-R ZD	STL-$^{M}_{B}$Q-R T0/T5/T2/T3 RD	STL-$^{M}_{B}$Q-R T0/T5/T2/T3 HD	STL-$^{M}_{B}$Q-R T2W/T3W RD	STL-$^{M}_{B}$Q-R T2W/T3W HD
ø20	78	97	30	31	33	$26.5+\frac{Stroke}{2}$	65	45	6	31	23.2	6	44	21	18	12	34.5	37.5	12.5	20	37	9.5	12.5	37.5
ø25	79	97	32	35	37	$27+\frac{Stroke}{2}$	66	45	6	35	24	5	47	24	16.5	13	34	39.5	11	20.5	38	9	14.5	36

*1 : When using a custom stroke, the dimensions are the same as the longer standard stroke.
*2 : Refer to pages 552 and 553 for RD, HD and protruding dimensions of the 2-color LED (except for T2WH/V and T3WH/V), off-delay, AC magnetic field proof and T1H/V switches.

LCM
LCR
LCG
LCW
LCX
STM
STG
STS/STL
STR2
UCA2
ULK*
JSK/M2
JSG
JSC3/JSC4
USSD
UFCD
USC
UB
JSB3
LMB
LML
HCM
HCA
LBC
CAC4
UCAC2
CAC-N
UCAC-N
RCS2
RCC2
PCC
SHC
MCP
GLC
MFC
BBS
RRC
GRC
RV3*
NHS
HRL
LN
Hand
Chuk
MecHnd/Chuk
ShkAbs
FJ
FK
SpdContr
Ending

Dimensions: ø32/ø40/ø50/ø63

CAD

● Position locking/head side (Dimensions not listed below are the same as those of the double acting/single rod)

STL-$^{M}_{B}$Q-H

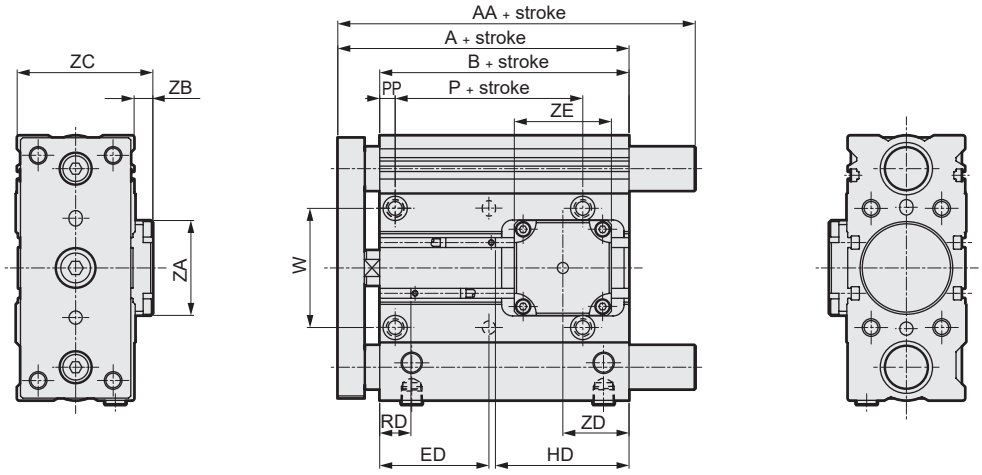

● Position locking/rod side (Dimensions not listed below are the same as those of the double acting/single rod)

STL-$^{M}_{B}$Q-R

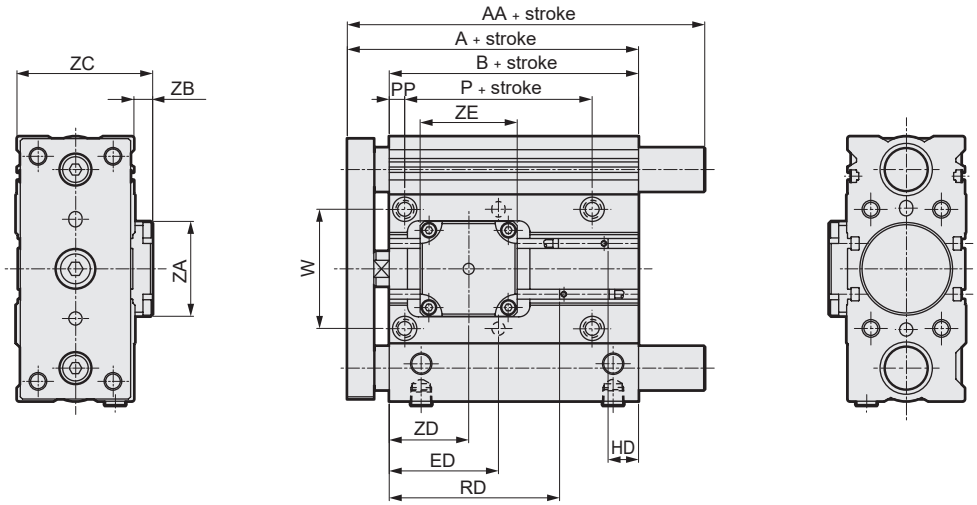

Code / Bore size (mm)	A	AA	EA	EC	EG	ED	B	P	PP	W	ZA	ZB	ZC	ZE	STL-$^{M}_{B}$Q-H ZD	STL-$^{M}_{B}$Q-H T0/T5/T2/T3 RD	STL-$^{M}_{B}$Q-H T0/T5/T2/T3 HD	STL-$^{M}_{B}$Q-H T2W/T3W RD	STL-$^{M}_{B}$Q-H T2W/T3W HD	STL-$^{M}_{B}$Q-R ZD	STL-$^{M}_{B}$Q-R T0/T5/T2/T3 RD	STL-$^{M}_{B}$Q-R T0/T5/T2/T3 HD	STL-$^{M}_{B}$Q-R T2W/T3W RD	STL-$^{M}_{B}$Q-R T2W/T3W HD
ø32	93	127	42	45	46	$30 + \frac{Stroke}{2}$	74	47	7	45	32	6.5	53.5	24	21	17.5	38.5	44	15	25	42.5	13.5	19	40
ø40	122	152	45	54	55	$44.5 + \frac{Stroke}{2}$	103	75	7	54	43	8	62	44	30	21	64	72.5	16	36	71	14	22.5	66
ø50	127	175	55	66	69	$44.5 + \frac{Stroke}{2}$	105	76	8	66	43	7.5	73.5	44	33	22	66	73.5	16.5	40	72	16	23.5	66.5
ø63	133	175	62	79	82	$47.5 + \frac{Stroke}{2}$	111	76	8	79	47	7.5	86.5	47	35	20	73	71.5	24.5	40	70	23	21.5	74.5

*1 : When using a custom stroke, the dimensions are the same as the longer standard stroke.
*2 : Refer to pages 552 and 553 for RD, HD and protruding dimensions of the 2-color LED (except for T2WH/V and T3WH/V), off-delay, AC magnetic field proof and T1H/V switches.

Dimensions: ø80

CAD

● Position locking/head side (Dimensions not listed below are the same as those of the double acting/single rod)

STL-$^{M}_{B}$Q-H

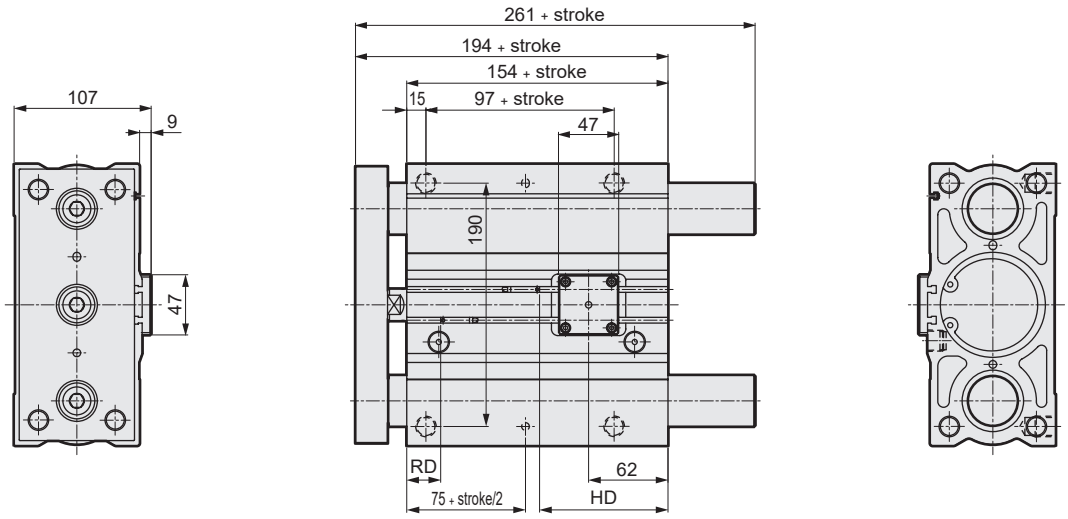

T0/T5/T2/T3		T2W/T3W	
RD	HD	RD	HD
26.5	105.5	28	110.5

● Position locking/rod side (Dimensions not listed below are the same as those of the double acting/single rod)

STL-$^{M}_{B}$Q-R

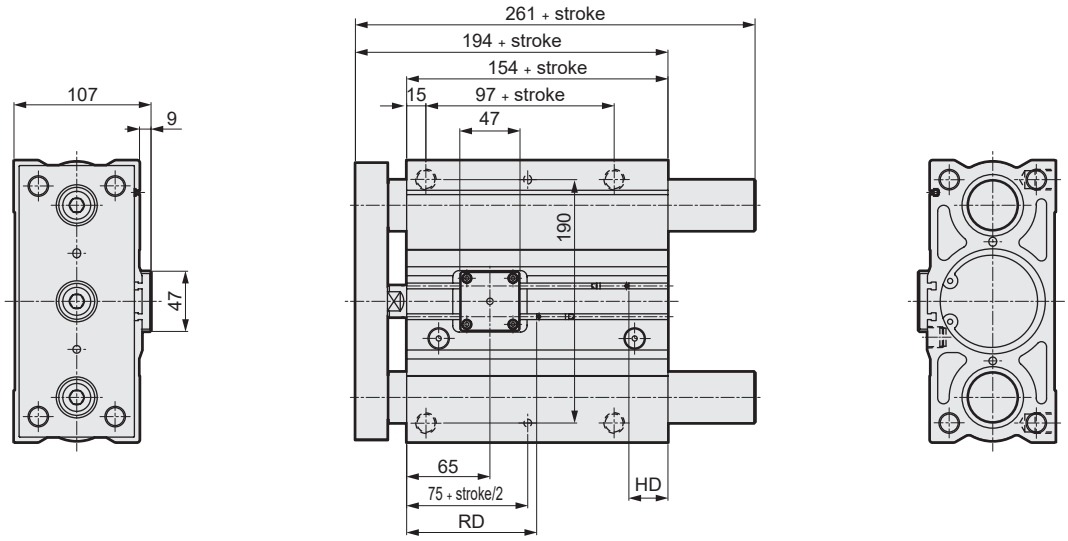

T0/T5/T2/T3		T2W/T3W	
RD	HD	RD	HD
101.5	30.5	103	35.5

*1 : When using a custom stroke, the dimensions are the same as the longer standard stroke.
*2 : Refer to pages 552 and 553 for RD, HD and protruding dimensions of the 2-color LED (except for T2WH/V and T3WH/V), off-delay, AC magnetic field proof and T1H/V switches.

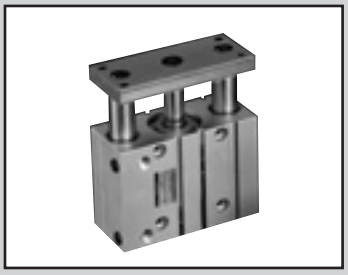

Guided cylinder/fine speed

STS/STL-$^{M}_{B}$F Series

● Bore size: ø8, ø12, ø16, ø20, ø25, ø32
ø40, ø50, ø63, ø80

JIS symbol

RoHS CAD

Specifications

Item	STS-MF, STS-BF (short stroke)/STL-MF, STL-BF (long stroke)									
Bore size mm	ø8	ø12	ø16	ø20	ø25	ø32	ø40	ø50	ø63	ø80
Actuation	Double acting									
Working fluid	Compressed air									
Max. working pressure MPa	1.0 (≈150 psi, 10 bar)									
Min. working pressure MPa	0.15 (≈22 psi, 1.5 bar)					0.1 (≈15 psi, 1 bar)				
Proof pressure MPa	1.6 (≈230 psi, 16 bar)									
Ambient temperature °C	5 (41°F) to 60 (140°F)									
Port size	M5					Rc1/8		Rc1/4		Rc3/8
Stroke tolerance mm	$^{+2.0}_{0}$									
Working piston speed mm/s	1 to 200									
Cushion	Rubber cushion									
Lubrication	Not available									
Allowable absorbed energy J	0.029	0.056	0.088	0.157	0.157	0.401	0.627	0.980	0.1560	2.510

*1: Refer to page 449 for theoretical thrust table.

Stroke

Model No.	Bore size (mm)	Standard stroke (mm)	Max. stroke (mm)	Min. stroke (mm)
STS-MF STS-BF	ø8, ø12, ø16	10, 20, 30, 40, 50	50	5
	ø20, ø25, ø32, ø40, ø50, ø63	25, 50		
	ø80	25, 50, 75, 100	100	
STL-MF STL-BF	ø8, ø12, ø16	50, 75, 100, 125, 150, 175, 200	200	50
	ø20, ø25, ø32, ø40, ø50, ø63	50, 75, 100, 125, 150, 175, 200		30
	ø80	75, 100, 125, 150, 175, 200		55

*1: The custom stroke is available in 5 mm increments. However, the total length is the same as that of the next longer standard stroke.

Switch specifications

● 1-color/2-color LED/for AC magnetic field proof

Item	Proximity 2-wire	Proximity 2-wire			Proximity 3-wire				Reed 2-wire							Proximity 2-wire
	T1H/ T1V	T2H/T2V/ T2JH/T2JV	T2YH/ T2YV	T2WH/ T2WV	T3H/ T3V	T3PH/ T3PV	T3YH/ T3YV	T3WH/ T3WV	T0H/T0V		T5H/T5V		T8H/T8V			T2YD(*4) T2YDT
Applications	For programmable controller, relay, compact solenoid valve	Dedicated for programmable controller			For programmable controller, relay				For programmable controller, relay		For programmable controller, relay, IC circuit (no indicator lamp), serial connection		For programmable controller, relay			For programmable controller
Output method	-				NPN output	PNP output	NPN output	NPN output	-							
Pwr. supp. V.	-				10 to 28 VDC				-							
Load voltage	85 to 265 VAC	10 to 30 VDC		24 VDC ±10%	30 VDC or less				12/24 VDC	100/110 VAC	5/12/24 VDC	100/110 VAC	12/24 VDC	110 VAC	220 VAC	24 VDC ±10%
Load current	5 to 100 mA	5 to 20 mA (*3)			100 mA or less		50 mA or less		5 to 50 mA	7 to 20 mA	≤50 mA	≤20 mA	5 to 50 mA	7 to 20 mA	7 to 10 mA	5 to 20 mA
Indicator	LED (Lit when ON)	LED (Lit when ON)	Red/green LED (Lit when ON)	Red/green LED (Lit when ON)	LED (Lit when ON)	Yellow LED (Lit when ON)	Red/green LED Lit when ON)	Red/green LED (Lit when ON)	LED (Lit when ON)		No indicator lamp		LED (Lit when ON)			Red/green LED (Lit when ON)
Leakage current	≤ 1 mA at 100 VAC, ≤ 2 mA at 200 VAC	1 mA or less			10 μA or less				0 mA							1 mA or less
Weight g	1 m:33 3 m:87 5 m:142	1 m:18 3 m:49 5 m:80	1 m:33 3 m:87 5 m:142	1 m:18 3 m:49 5 m:80	1 m:18 3 m:49 5 m:80		1 m:33 3 m:87 5 m:142	1 m:18 3 m:49 5 m:80	1 m:18 3 m:49 5 m:80				1 m:33 3 m:87 5 m:142			1 m:61 3 m:166 5 m:272

*1: Refer to Ending Page 1 for detailed switch specifications and dimensions.
*2: Switches other than the above models, such as switches with connectors, are also available. Refer to Ending Page 1.
*3: The max. load current is 20 mA at 25°C. The current is lower than 20 mA if the operating ambient temperature around the switch is higher than 25°C. (5 to 10 mA at 60°C)
*4: AC magnetic field proof switch (T2YD/T2YDT) cannot be used in DC magnetic fields.

For cylinder weight, refer to pages 558 to 561.

Technical data

Refer to Measuring methods (in Pneumatic Cylinders I (Catalog No.CB-029SA) on page 1161), for technical data regarding measuring dimensions.

How to order

● Short stroke

Without switch (built-in magnet for switch)

STS - M F - 8 ( ) - 10 ———— F

With switch (built-in magnet for switch)

STS - M F - 8 ( ) - 10 - T2H - R - F

● Long stroke

Without switch (built-in magnet for switch)

STL - M F - 8 ( ) - 50 ———— F

With switch (built-in magnet for switch)

STL - M F - 8 ( ) - 50 - T2H - R - F

Model No.
Ⓐ Bearing
Ⓑ Bore size
Ⓒ Port thread
Ⓓ Stroke
Ⓔ Switch model No. *3 *4
Ⓕ Switch quantity
Ⓖ Option

■ The custom stroke is available in 5 mm increments.
However, the total length is the same as that of the next longer standard stroke.

For the 2-color LED, T1H/V, T8H/V and AC magnetic field proof switches for ø40 and over, add "L1" to the model No.
(Example) STS-MF-**L1**-63-50-T2YH-D
For ø80, the 2-color LED, T1H/V and AC magnetic field proof switches cannot be retrofitted on a previously purchased standard product.
In this case, order the model No. with "L1" inserted between Ⓐ and Ⓑ.
(Example) STS-MF-L1-80-50-F

⚠ Precautions for model No. selection

*1: Refer to pages 444 to 447 for combinations of variations/ options.
*2: Refer to page 458 for material details.

[Example of model No.]

STL-MF-8-50-T2H-R-F

Model: Guided cylinder, long stroke, fine speed

Ⓐ Bearing : Metal bush bearing
Ⓑ Bore size : ø8 mm
Ⓒ Port thread : M5
Ⓓ Stroke : 50 mm
Ⓔ Switch model No. : Proximity switch T2H, lead wire 1 m
Ⓕ Switch quantity : 1 on rod side
Ⓖ Option : End plate material: steel

Ⓓ Stroke

Series	Stroke (mm)		Applicable bore size									
			ø8	ø12	ø16	ø20	ø25	ø32	ø40	ø50	ø63	ø80
STS	Standard stroke	10	●	●	●							
		20	●	●	●							
		25				●	●	●	●	●	●	●
		30	●	●	●							
		40	●	●	●							
		50	●	●	●	●	●	●	●	●	●	●
		75										●
		100										●
	Min. stroke *1		5									
	Custom stroke *1, 2		In 5 mm increments									
STL	Standard stroke	50	●	●	●	●	●	●	●	●	●	
		75	●	●	●	●	●	●	●	●	●	●
		100	●	●	●	●	●	●	●	●	●	●
		125	●	●	●	●	●	●	●	●	●	●
		150	●	●	●	●	●	●	●	●	●	●
		175	●	●	●	●	●	●	●	●	●	●
		200	●	●	●	●	●	●	●	●	●	●
	Min. stroke *1		50			30						55
	Custom stroke *1, 2		In 5 mm increments									

*1 : The total dimensions are the same as the longer standard stroke.
*2 : Special total length for custom stroke can be provided when a custom stroke is used. (Made to order)
*3 : T8H/V switch cannot be installed on ø8 to ø16.
*4 : Switches are shipped with the product. Contact CKD if assembling before shipment is necessary.

Code	Description
Ⓐ Bearing	
M	Metal bush bearing
B	Ball bearing
Ⓑ Bore size (mm)	
8	ø8
12	ø12
16	ø16
20	ø20
25	ø25
32	ø32
40	ø40
50	ø50
63	ø63
80	ø80
Ⓒ Port thread	
Blank	M5 (ø8 to ø25)
	Rc thread (ø32 to ø80)
NN	NPT thread (ø32 and over) made-to-order product
GN	G thread (ø32 and over) made-to-order product
Ⓓ Stroke (mm)	
Refer to the stroke table below.	

Ⓔ Switch model No.

Straight lead wire	L-shaped lead wire	Contact	Voltage AC	Voltage DC	Indicator	Lead wire
T0H*	T0V*	Reed	●	●	1-color LED	2-wire
T5H*	T5V*	Reed	●	●	no indicator lamp	2-wire
T8H*	T8V*	Reed	●	●	1-color LED	2-wire
T1H*	T1V*	Proximity	●		1-color LED	2-wire
T2H*	T2V*	Proximity		●	1-color LED	2-wire
T3H*	T3V*	Proximity		●	1-color LED	3-wire
T3PH*	T3PV*	Proximity		●	1-color LED	3-wire
T2WH*	T2WV*	Proximity		●	2-color LED	2-wire
T2YH*	T2YV*	Proximity		●	2-color LED	2-wire
T3WH*	T3WV*	Proximity		●	2-color LED	3-wire
T3YH*	T3YV*	Proximity		●	2-color LED	3-wire
T2JH*	T2JV*	Proximity		●	1-color LED off-delay	2-wire
T2YD*	-	Proximity		●	2-color LED (AC magnetic field)	2-wire
T2YDT*	-	Proximity		●	2-color LED (AC magnetic field)	2-wire

* Lead wire length	
Blank	1 m (standard)
3	3 m (option)
5	5 m (option)

Ⓕ Switch quantity	
R	1 on rod side
H	1 on head side
D	2
T	3

Ⓖ Option		
F		End plate material (steel)
M	*2	Corrosion proof (Piston rod and guide rod material: SUS) (made-to-order product)
M1	*2	Corrosion proof (Piston rod, guide rod and end plate material: SUS) (made-to-order product)

How to order switch

SW - T0H

Switch model No.
(Item Ⓔ above)

Dimensions

Same as STS/STL Series (double acting/single rod).
STS Series : Page 459 (ø8 to ø16), page 460 (ø20 and ø25), page 461 (ø32 to ø63) and page 462 (ø80)
STL Series : Page 464 (ø8 to ø16), page 465 (ø20 and ø25), page 466 (ø32 to ø63) and page 467 (ø80)

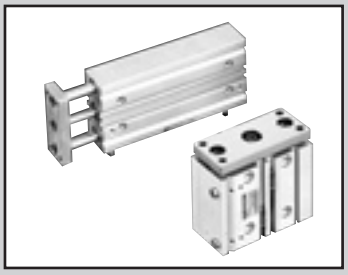

Guided cylinder Double acting/low speed

STS/STL-$^{M}_{B}$O Series

● Bore size: ø8/ø12/ø16/ø20/ø25/ø32/ø40/ø50/ø63/ø80

JIS symbol

RoHS CAD

Specifications

Item	STS-MO/BO, STL-MO/BO									
Bore size mm	ø8	ø12	ø16	ø20	ø25	ø32	ø40	ø50	ø63	ø80
Actuation	Double acting/low speed									
Working fluid	Compressed air									
Max. working pressure MPa	1.0 (≈150 psi, 10 bar)									
Min. working pressure MPa	0.15 (≈22 psi, 1.5 bar)					0.1 (≈15 psi, 1 bar)				
Proof pressure MPa	1.6 (≈230 psi, 16 bar)									
Ambient temperature °C	-10 (14°F) to 60 (140°F) (no freezing)									
Port size	M5					Rc1/8		Rc1/4		Rc3/8
Stroke tolerance mm	$^{+2.0}_{0}$									
Working piston speed mm/s	10 to 200									
Cushion	With rubber cushion									
Lubrication	Not available									
Allowable absorbed energy J	0.029	0.056	0.088	0.157	0.157	0.401	0.627	0.980	0.1560	2.510

Stroke

· Short stroke STS

Bore size (mm)	Standard stroke (mm)	Max. stroke (mm)	Min. stroke (mm)	Min. stroke with switch (mm)
ø 8	10, 20, 30, 40, 50	50	5	5 With one or two switches
ø12				
ø16				
ø20	25, 50			
ø25				
ø32				
ø40				
ø50				
ø63				
ø80	25, 50, 75, 100	100		

· Long stroke STL

Bore size (mm)	Standard stroke (mm)	Max. stroke (mm)	Min. stroke (mm)	Min. stroke with switch (mm)
ø 8	50, 75, 100, 125, 150	150	50	50
ø12				
ø16				
ø20	50, 75, 100, 125, 150 175, 200, 225, 250 275, 300	300	30	30 With one or two switches
ø25				
ø32				
ø40				
ø50				
ø63				
ø80	75, 100, 125, 150, 175 200, 225, 250, 275, 300		55	55 With one or two switches

Note : The custom stroke is available in 5 mm increments.
However, the total length is the same as that of the next longer standard stroke.

Switch specifications

● 1-color/2-color LED/for AC magnetic field proof

Item	Proximity 2-wire	Proximity 2-wire			Proximity 3-wire				Reed 2-wire							Proximity 2-wire
	T1H/ T1V	T2H/T2V/ T2JH/T2JV	T2YH/ T2YV	T2WH/ T2WV	T3H/ T3V	T3PH/ T3PV	T3YH/ T3YV	T3WH/ T3WV	T0H/T0V		T5H/T5V		T8H/T8V			T2YD(*4) T2YDT
Applications	For programmable controller, relay, compact solenoid valve	Dedicated for programmable controller			For programmable controller, relay				For programmable controller, relay		For programmable controller, relay, IC circuit (no indicator lamp), serial connection		For programmable controller, relay			For programmable controller
Output method	-				NPN output	PNP output	NPN output	NPN output	-							
Pwr. supp. V.	-				10 to 28 VDC				-							
Load voltage	85 to 265 VAC	10 to 30 VDC		24 VDC ±10%	30 VDC or less				12/24 VDC	100/110 VAC	5/12/24 VDC	100/110 VAC	12/24 VDC	110 VAC	220 VAC	24 VDC ±10%
Load current	5 to 100mA	5 to 20 mA (*3)			100 mA or less		50 mA or less		5 to 50mA	7 to 20mA	50 mA or less	20 mA or less	5 to 50mA	7 to 20mA	7 to 10mA	5 to 20mA
Indicator lamp	LED (Lit when ON)	LED (Lit when ON)	Red/green LED (Lit when ON)	Red/green LED (Lit when ON)	LED (Lit when ON)	Yellow LED (Lit when ON)	Red/green LED (Lit when ON)	Red/green LED (Lit when ON)	LED (Lit when ON)		No indicator lamp		LED (Lit when ON)			Red/green LED (Lit when ON)
Leakage current	1 mA or less with 100 VAC, 2 mA or less with 200 VAC	1 mA or less			10 μA or less				0mA							1 mA or less
Weight g	1 m: 33 3 m: 87 5 m: 142	1 m: 18 3 m: 49 5 m: 80	1 m: 33 3 m: 87 5 m: 142	1 m: 18 3 m: 49 5 m: 80	1 m: 18 3 m: 49 5 m: 80		1 m: 33 3 m: 87 5 m: 142	1 m: 18 3 m: 49 5 m: 80	1 m: 18 3 m: 49 5 m: 80				1 m: 33 3 m: 87 5 m: 142			1 m: 61 3 m: 166 5 m: 272

*1: Refer to Ending Page 1 for detailed switch specifications and dimensions.
*2: Switches other than the above models, such as switches with connectors, are also available. Refer to Ending Page 1.
*3: The max. load current is 20 mA at 25°C. The current is lower than 20 mA if the operating ambient temperature around the switch is higher than 25˚C. (5 to 10 mA at 60°C)
*4: AC magnetic field proof switch (T2YD/T2YDT) cannot be used in DC magnetic fields.

Theoretical thrust table

(Unit: N)

Bore size (mm)	Operating direction	Working pressure MPa										
		0.1	0.15	0.2	0.3	0.4	0.5	0.6	0.7	0.8	0.9	1.0
ø8	Push	-	7.54	10.1	15.1	20.1	25.1	30.2	35.2	40.2	45.2	50.3
	Pull	-	5.65	7.54	11.3	15.1	18.8	22.6	26.4	30.2	33.9	37.7
ø12	Push	-	17.0	22.6	33.9	45.2	56.5	67.9	79.2	90.5	1.02×10^2	1.13×10^2
	Pull	-	12.7	17.0	25.4	33.9	42.4	50.9	59.4	67.9	76.3	84.8
ø16	Push	-	30.2	40.2	60.3	80.4	1.01×10^2	1.21×10^2	1.41×10^2	1.61×10^2	1.81×10^2	2.01×10^2
	Pull	-	22.6	30.2	45.2	60.3	75.4	90.5	1.06×10^2	1.21×10^2	1.36×10^2	1.51×10^2
ø20	Push	-	47.1	62.8	94.2	1.26×10^2	1.57×10^2	1.88×10^2	2.20×10^2	2.51×10^2	2.83×10^2	3.14×10^2
	Pull	-	35.3	47.1	70.7	94.2	1.18×10^2	1.41×10^2	1.65×10^2	1.88×10^2	2.12×10^2	2.36×10^2
ø25	Push	-	73.6	98.2	1.47×10^2	1.96×10^2	2.45×10^2	2.95×10^2	3.44×10^2	3.93×10^2	4.42×10^2	4.91×10^2
	Pull	-	56.7	75.6	1.13×10^2	1.51×10^2	1.89×10^2	2.27×10^2	2.64×10^2	3.02×10^2	3.40×10^2	3.78×10^2
ø32	Push	80.4	1.21×10^2	1.61×10^2	2.41×10^2	3.22×10^2	4.02×10^2	4.83×10^2	5.63×10^2	6.43×10^2	7.24×10^2	8.04×10^2
	Pull	60.3	90.5	1.21×10^2	1.81×10^2	2.41×10^2	3.02×10^2	3.62×10^2	4.22×10^2	4.83×10^2	5.43×10^2	6.03×10^2
ø40	Push	1.26×10^2	1.88×10^2	2.51×10^2	3.77×10^2	5.03×10^2	6.28×10^2	7.54×10^2	8.80×10^2	1.01×10^3	1.13×10^3	1.26×10^3
	Pull	1.06×10^2	1.58×10^2	2.11×10^2	3.17×10^2	4.22×10^2	5.28×10^2	6.33×10^2	7.39×10^2	8.44×10^2	9.50×10^2	1.06×10^3
ø50	Push	1.96×10^2	2.95×10^2	3.93×10^2	5.89×10^2	7.85×10^2	9.82×10^2	1.18×10^3	1.37×10^3	1.57×10^3	1.77×10^3	1.96×10^3
	Pull	1.65×10^2	2.47×10^2	3.30×10^2	4.95×10^2	6.60×10^2	8.25×10^2	9.90×10^2	1.15×10^3	1.32×10^3	1.48×10^3	1.65×10^3
ø63	Push	3.12×10^2	4.68×10^2	6.23×10^2	9.35×10^2	1.25×10^3	1.56×10^3	1.87×10^3	2.18×10^3	2.49×10^3	2.81×10^3	3.12×10^3
	Pull	2.80×10^2	4.20×10^2	5.61×10^2	8.41×10^2	1.12×10^3	1.40×10^3	1.68×10^3	1.96×10^3	2.24×10^3	2.52×10^3	2.80×10^3
ø80	Push	5.03×10^2	7.54×10^2	1.01×10^3	1.51×10^3	2.01×10^3	2.51×10^3	3.02×10^3	3.52×10^3	4.02×10^3	4.52×10^3	5.03×10^3
	Pull	4.54×10^2	6.80×10^2	9.07×10^2	1.36×10^3	1.81×10^3	2.27×10^3	2.72×10^3	3.17×10^3	3.63×10^3	4.08×10^3	4.54×10^3

For cylinder weight, refer to pages 558 to 561.

LCM
LCR
LCG
LCW
LCX
STM
STG
STS/STL
STR2
UCA2
ULK*
JSK/M2
JSG
JSC3/JSC4
USSD
UFCD
USC
UB
JSB3
LMB
LML
HCM
HCA
LBC
CAC4
UCAC2
CAC-N
UCAC-N
RCS2
RCC2
PCC
SHC
MCP
GLC
MFC
BBS
RRC
GRC
RV3*
NHS
HRL
LN
Hand
Chuk
MecHnd/Chuk
ShkAbs
FJ
FK
SpdContr
Ending

How to order

● Short stroke

Without switch (built-in magnet for switch)

STS - M O - 8 ◯ - 10 ——— F

With switch (built-in magnet for switch)

STS - M O - 8 ◯ - 10 - T2H - R - F

● Long stroke

Without switch (built-in magnet for switch)

STL - M O - 8 ◯ - 50 ——— F

With switch (built-in magnet for switch)

STL - M O - 8 ◯ - 50 - T2H - R - F

Ⓐ Bearing

Ⓑ Bore size

Ⓒ Port thread

Ⓓ Stroke

■ Custom stroke
Available in 5 mm increments. However, the total length is the same as that of the next longer standard stroke.

Ⓔ Switch model No.
*1, *3, *4

For the 2-color LED, T1H/V, T8H/V and AC magnetic field proof switches for ø40 and over, insert "L1" with "-" between Ⓐ and Ⓑ.
(Example) STS-MO-L1-63-50-T2YH3-D-F
For ø80, the 2-color LED, T1H/V, T8H/V and AC magnetic field proof switches cannot be retrofitted on a previously purchased standard product.
In this case, order the model No. with "L1" inserted between Ⓐ and Ⓑ.
(Example) STS-MO-L1-80-50-F

Ⓕ Switch quantity

Ⓖ Option

⚠ Precautions for model No. selection

*1 : Switches other than Ⓔ Switch model No. are also available. (Made-to-order product)
Refer to Ending Page 1 for details.
*2 : Refer to pages 444 to 447 for combinations of variations/options.
*3 : T8H/V switch cannot be installed on ø8 to ø16.
*4 : Switches are shipped with the product. Contact CKD if assembling before shipment is necessary.
*5 : Refer to page 458 for material details.

[Example of model No.]

STS-MO-8-30-T0H-R-F

Model: Guided cylinder, short stroke, standard/low speed

Ⓐ Bearing : Metal bush bearing
Ⓑ Bore size : ø8 mm
Ⓒ Port thread : M5
Ⓓ Stroke : 30 mm
Ⓔ Switch model No.: Reed T0H, lead wire length 1 m
Ⓕ Switch quantity : 1 on rod side
Ⓖ Option : End plate material: steel

Code	Description
Ⓐ Bearing	
M	Metal bush bearing
B	Ball bearing
Ⓑ Bore size (mm)	
8	ø 8
12	ø12
16	ø16
20	ø20
25	ø25
32	ø32
40	ø40
50	ø50
63	ø63
80	ø80
Ⓒ Port thread	
Blank	M5 (ø8 to ø25)
	Rc thread (ø32 to ø80)
NN	NPT thread (ø32 and over) made-to-order product
GN	G thread (ø32 and over) made-to-order product
Ⓓ Stroke (mm)	
Refer to the stroke table on the following page.	

Ⓔ Switch model No.

Straight lead wire	L-shaped lead wire	Contact	Voltage AC	Voltage DC	Indicator	Lead wire
T0H*	T0V*	Reed	●	●	1-color LED	2-wire
T5H*	T5V*	Reed	●	●	no indicator lamp	2-wire
T8H*	T8V*	Reed	●	●	1-color LED	2-wire
T1H*	T1V*	Proximity	●		1-color LED	2-wire
T2H*	T2V*	Proximity		●	1-color LED	2-wire
T3H*	T3V*	Proximity		●	1-color LED	3-wire
T3PH*	T3PV*	Proximity		●	1-color LED	3-wire
T2WH*	T2WV*	Proximity		●	2-color LED	2-wire
T2YH*	T2YV*	Proximity		●	2-color LED	2-wire
T3WH*	T3WV*	Proximity		●	2-color LED	3-wire
T3YH*	T3YV*	Proximity		●	2-color LED	3-wire
T2JH*	T2JV*	Proximity		●	1-color LED off-delay	2-wire
T2YD*	-	Proximity		●	2-color LED (AC magnetic field)	2-wire
T2YDT*	-	Proximity		●	2-color LED (AC magnetic field)	2-wire

* Lead wire length	
Blank	1 m (standard)
3	3 m (option)
5	5 m (option)

Ⓕ Switch quantity	
R	1 on rod side
H	1 on head side
D	2
T	3

Ⓖ Option		
F		End plate material (steel)
M	*5	Corrosion proof (Piston rod and guide rod material: SUS) (made-to-order product)
M1	*5	Corrosion proof (Piston rod, guide rod and end plate material: SUS) (made-to-order product)

Ⓓ Stroke

Series	Stroke (mm)		Applicable bore size									
			ø8	ø12	ø16	ø20	ø25	ø32	ø40	ø50	ø63	ø80
STS	Standard stroke	10	●	●	●							
		20	●	●	●							
		25				●	●	●	●	●	●	●
		30	●	●	●							
		40	●	●	●							
		50	●	●	●	●	●	●	●	●	●	●
		75										●
		100										●
	Min. stroke *1		5									
	Custom stroke *1, 2		In 5 mm increments									
STL	Standard stroke	50	●	●	●	●	●	●	●	●	●	
		75	●	●	●	●	●	●	●	●	●	●
		100	●	●	●	●	●	●	●	●	●	●
		125	●	●	●	●	●	●	●	●	●	●
		150	●	●	●	●	●	●	●	●	●	●
		175				●	●	●	●	●	●	●
		200				●	●	●	●	●	●	●
		225				●	●	●	●	●	●	●
		250				●	●	●	●	●	●	●
		275				●	●	●	●	●	●	●
		300				●	●	●	●	●	●	●
	Min. stroke *1		50			30						55
	Custom stroke *1, 2		In 5 mm increments									

*1 : The total dimensions are the same as the longer standard stroke.
*2 : Special total length for custom stroke can be provided when a custom stroke is used. (Made to order)

How to order switch

SW - T0V

Switch model No.
(Item Ⓔ on page 516)

Internal structure and parts list

Same as double acting/single rod. Refer to pages 453 to 457.

Repair parts list

Bore size (mm)	Kit No. STS-$^{M}_{B}$O	Repair parts No.
ø8	STS-O-8K	❼ ❾ ❿ ⓭ ⓰
ø12	STS-O-12K	❼ ❾ ❿ ⓭ ⓰ ㉜
ø16	STS-O-16K	
ø20	STS-O-20K	❼ ❾ ❿ ⓭ ⓰ ⓱ ㉜
ø25	STS-O-25K	
ø32	STS-O-32K	
ø40	STS-O-40K	
ø50	STS-O-50K	
ø63	STS-O-63K	
ø80	STS-O-80K	

Note : Specify the kit No. when placing an order.

Dimensions

Same as STS/STL Series (double acting/single rod). Refer to the pages below.

STS Series : Page 459 (ø8 to ø16), page 460 (ø20 and ø25), page 461 (ø32 to ø63) and page 462 (ø80)
STL Series : Page 464 (ø8 to ø16), page 465 (ø20 and ø25), page 466 (ø32 to ø63) and page 467 (ø80)

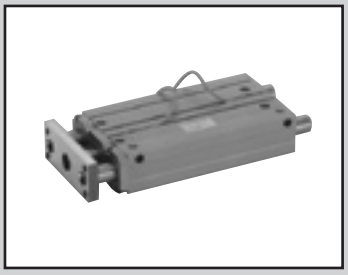

Guided cylinder Double acting/rubber scraper

STS/STL-$^{M}_{B}$G Series

Double acting/coil scraper

STS/STL-$^{M}_{B}$G1 Series

● Bore size: ø20/ø25/ø32/ø40/ø50/ø63/ø80

JIS symbol

RoHS CAD

Specifications

Item	STS-MG/BG, STS-MG1/BG1, STL-MG/BG, STL-MG1/BG1						
Bore size mm	ø20	ø25	ø32	ø40	ø50	ø63	ø80
Actuation	Double acting/scraper						
Working fluid	Compressed air						
Max. working pressure MPa	1.0 (≈150 psi, 10 bar)						
Min. working pressure MPa	0.2 (≈29 psi, 2 bar)		0.15 (≈22 psi, 1.5 bar)				
Proof pressure MPa	1.6 (≈230 psi, 16 bar)						
Ambient temperature °C	-10 (14°F) to 60 (140°F) (no freezing)						
Port size	M5		Rc1/8		Rc1/4		Rc3/8
Stroke tolerance mm	$^{+2.0}_{0}$						
Working piston speed mm/s	50 to 500					50 to 300	
Cushion	With rubber cushion						
Lubrication	Not required (use turbine oil class 1 ISO VG32 if necessary for lubrication)						
Allowable absorbed energy J	0.157	0.157	0.401	0.627	0.980	1.560	2.510

Stroke

· Short stroke STS

Bore size (mm)	Standard stroke (mm)	Max. stroke (mm)	Min. stroke (mm)	Min. stroke with switch (mm)
ø20	25, 50	50	5	5 With one or two switches
ø25				
ø32				
ø40				
ø50				
ø63				
ø80	25, 50, 75, 100	100		

· Long stroke STL

Bore size (mm)	Standard stroke (mm)	Max. stroke (mm)	Min. stroke (mm)	Min. stroke with switch (mm)
ø20	50,75,100,125,150 175,200,225,250 275,300,325,350 375,400	400	30	30 With one or two switches
ø25				
ø32				
ø40				
ø50				
ø63				
ø80	75,100,125,150,175 200,225,250,275,300 325,350,375,400		55	55 With one or two switches

Note : The custom stroke is available in 5 mm increments.
However, the total length is the same as that of the next longer standard stroke.

Switch specifications

● 1-color/2-color LED/for AC magnetic field proof

Item	Proximity 2-wire	Proximity 2-wire			Proximity 3-wire				Reed 2-wire							Proximity 2-wire
	T1H/ T1V	T2H/T2V/ T2JH/T2JV	T2YH/ T2YV	T2WH/ T2WV	T3H/ T3V	T3PH/ T3PV	T3YH/ T3YV	T3WH/ T3WV	T0H/T0V		T5H/T5V		T8H/T8V			T2YD(*4) T2YDT
Applications	For programmable controller, relay, compact solenoid valve	Dedicated for programmable controller			For programmable controller, relay				For programmable controller, relay		For programmable controller, relay, IC circuit (no indicator lamp), serial connection		For programmable controller, relay			For programmable controller
Output method	-				NPN output	PNP output	NPN output	NPN output	-							
Pwr. supp. V.	-				10 to 28 VDC				-							
Load voltage	85 to 265 VAC	10 to 30 VDC		24 VDC ±10%	30 VDC or less				12/24 VDC	100/110 VAC	5/12/24 VDC	100/110 VAC	12/24 VDC	110 VAC	220 VAC	24 VDC ±10%
Load current	5 to 100mA	5 to 20 mA (*3)			100 mA or less		50 mA or less		5 to 50mA	7 to 20mA	50 mA or less	20 mA or less	5 to 50mA	7 to 20mA	7 to 10mA	5 to 20mA
Indicator lamp	LED (Lit when ON)	LED (Lit when ON)	Red/green LED (Lit when ON)	Red/green LED (Lit when ON)	LED (Lit when ON)	Yellow LED (Lit when ON)	Red/green LED (Lit when ON)	Red/green LED (Lit when ON)	LED (Lit when ON)		No indicator lamp		LED (Lit when ON)			Red/green LED (Lit when ON)
Leakage current	1 mA or less with 100 VAC, 2 mA or less with 200 VAC	1 mA or less			10 μA or less				0mA							1 mA or less
Weight g	1 m: 33 3 m: 87 5 m: 142	1 m: 18 3 m: 49 5 m: 80	1 m: 33 3 m: 87 5 m: 142	1 m: 18 3 m: 49 5 m: 80	1 m: 18 3 m: 49 5 m: 80		1 m: 33 3 m: 87 5 m: 142	1 m: 18 3 m: 49 5 m: 80	1 m: 18 3 m: 49 5 m: 80				1 m: 33 3 m: 87 5 m: 142			1 m: 61 3 m: 166 5 m: 272

*1: Refer to Ending Page 1 for detailed switch specifications and dimensions.
*2: Switches other than the above models, such as switches with connectors, are also available. Refer to Ending Page 1.
*3: The max. load current is 20 mA at 25°C. The current is lower than 20 mA if the operating ambient temperature around the switch is higher than 25˚C. (5 to 10 mA at 60°C)
*4: AC magnetic field proof switch (T2YD/T2YDT) cannot be used in DC magnetic fields.

Theoretical thrust table

(Unit: N)

Bore size (mm)	Operating direction	Working pressure MPa									
		0.15	0.2	0.3	0.4	0.5	0.6	0.7	0.8	0.9	1.0
ø20	Push	-	62.8	94.2	1.26×10^2	1.57×10^2	1.88×10^2	2.20×10^2	2.51×10^2	2.83×10^2	3.14×10^2
	Pull	-	47.1	70.7	94.2	1.18×10^2	1.41×10^2	1.65×10^2	1.88×10^2	2.12×10^2	2.36×10^2
ø25	Push	-	98.2	1.47×10^2	1.96×10^2	2.45×10^2	2.95×10^2	3.44×10^2	3.93×10^2	4.42×10^2	4.91×10^2
	Pull	-	75.6	1.13×10^2	1.51×10^2	1.89×10^2	2.27×10^2	2.64×10^2	3.02×10^2	3.40×10^2	3.78×10^2
ø32	Push	1.21×10^2	1.61×10^2	2.41×10^2	3.22×10^2	4.02×10^2	4.83×10^2	5.63×10^2	6.43×10^2	7.24×10^2	8.04×10^2
	Pull	90.5	1.21×10^2	1.81×10^2	2.41×10^2	3.02×10^2	3.62×10^2	4.22×10^2	4.83×10^2	5.43×10^2	6.03×10^2
ø40	Push	1.88×10^2	2.51×10^2	3.77×10^2	5.03×10^2	6.28×10^2	7.54×10^2	8.80×10^2	1.01×10^3	1.13×10^3	1.26×10^3
	Pull	1.58×10^2	2.11×10^2	3.17×10^2	4.22×10^2	5.28×10^2	6.33×10^2	7.39×10^2	8.44×10^2	9.50×10^2	1.06×10^3
ø50	Push	2.95×10^2	3.93×10^2	5.89×10^2	7.85×10^2	9.82×10^2	1.18×10^3	1.37×10^3	1.57×10^3	1.77×10^3	1.96×10^3
	Pull	2.47×10^2	3.30×10^2	4.95×10^2	6.60×10^2	8.25×10^2	9.90×10^2	1.15×10^3	1.32×10^3	1.48×10^3	1.65×10^3
ø63	Push	4.68×10^2	6.23×10^2	9.35×10^2	1.25×10^3	1.56×10^3	1.87×10^3	2.18×10^3	2.49×10^3	2.81×10^3	3.12×10^3
	Pull	4.20×10^2	5.61×10^2	8.41×10^2	1.12×10^3	1.40×10^3	1.68×10^3	1.96×10^3	2.24×10^3	2.52×10^3	2.80×10^3
ø80	Push	7.54×10^2	1.01×10^3	1.51×10^3	2.01×10^3	2.51×10^3	3.02×10^3	3.52×10^3	4.02×10^3	4.52×10^3	5.03×10^3
	Pull	6.80×10^2	9.07×10^2	1.36×10^3	1.81×10^3	2.27×10^3	2.72×10^3	3.17×10^3	3.63×10^3	4.08×10^3	4.54×10^3

For cylinder weight, refer to pages 558 to 561.

How to order

● Short stroke

Without switch (built-in magnet for switch)

STS - M G - 20 ( ) - 25 ———— F

With switch (built-in magnet for switch)

STS - M G - 20 ( ) - 25 - T2H - R - F

● Long stroke

Without switch (built-in magnet for switch)

STL - M G - 20 ( ) - 50 ———— F

With switch (built-in magnet for switch)

STL - M G - 20 ( ) - 50 - T2H - R - F

Ⓐ Bearing

Ⓑ Model No.

Ⓒ Bore size

Ⓓ Port thread

Ⓔ Stroke

■ Custom stroke

Available in 5 mm increments. However, the total length is the same as that of the next longer standard stroke.

Ⓕ Switch model No.

*1, *3

For the 2-color LED, T1H/V, T8H/V and AC magnetic field proof switches for ø40 and over, insert "L1" with "-" between Ⓑ and Ⓒ.

(Example) STS-MG-L1-63-50-T2YH3-D-F

For ø80, the 2-color LED, T1H/V, T8H/V and strong magnetic field proof switches cannot be retrofitted on a previously purchased standard product.

In this case, order the model No. with "L1" inserted between Ⓑ and Ⓒ.

(Example) STS-MG-L1-80-50-F

Ⓖ Switch quantity

Ⓗ Option

Code	Description
Ⓐ Bearing	
M	Metal bush bearing
B	Ball bearing
Ⓑ Model No.	
G	Rubber scraper
G1	Coil scraper
Ⓒ Bore size (mm)	
20	ø20
25	ø25
32	ø32
40	ø40
50	ø50
63	ø63
80	ø80
Ⓓ Port thread	
Blank	M5 (ø20, ø25)
	Rc thread (ø32 to ø80)
NN	NPT thread (ø32 and over) made-to-order product
GN	G thread (ø32 and over) made-to-order product
Ⓔ Stroke (mm)	
Refer to the stroke table on the following page.	

Ⓕ Switch model No.

Straight lead wire	L-shaped lead wire	Contact	Voltage AC	Voltage DC	Indicator	Lead wire
T0H*	T0V*	Reed	●	●	1-color LED	2-wire
T5H*	T5V*	Reed	●	●	no indicator lamp	2-wire
T8H*	T8V*	Reed	●	●	1-color LED	2-wire
T1H*	T1V*	Proximity	●		1-color LED	2-wire
T2H*	T2V*	Proximity		●	1-color LED	2-wire
T3H*	T3V*	Proximity		●	1-color LED	3-wire
T3PH*	T3PV*	Proximity		●	1-color LED	3-wire
T2WH*	T2WV*	Proximity		●	2-color LED	2-wire
T2YH*	T2YV*	Proximity		●	2-color LED	2-wire
T3WH*	T3WV*	Proximity		●	2-color LED	3-wire
T3YH*	T3YV*	Proximity		●	2-color LED	3-wire
T2JH*	T2JV*	Proximity		●	1-color LED off-delay	2-wire
T2YD*	-	Proximity		●	2-color LED (AC magnetic field)	2-wire
T2YDT*	-	Proximity		●	2-color LED (AC magnetic field)	2-wire

* Lead wire length	
Blank	1 m (standard)
3	3 m (option)
5	5 m (option)

Ⓖ Switch quantity	
R	1 on rod side
H	1 on head side
D	2
T	3

Ⓗ Option	
F	End plate material (steel)
M *4	Corrosion proof (Piston rod and guide rod material: SUS) (made-to-order product)
M1 *4	Corrosion proof (Piston rod, guide rod and end plate material: SUS) (made-to-order product)
P6 *5	Copper/PTFE free specs (made to order) (N/A for G1 coil scraper)

⚠ Precautions for model No. selection

*1 : Switches other than Ⓕ Switch model No. are also available. (Made-to-order product) Refer to Ending Page 1 for details.

*2 : Refer to pages 444 to 447 for combinations of variations/options.

*3 : Switches are shipped with the product. Contact CKD if assembling before shipment is necessary.

*4 : Refer to page 458 for material details.

*5 : ø20 and ø25 with ball bearing B are copper and PTFE free as standard. Not available for coil scraper G1.

[Example of model No.]

STS-MG-20-25-T0H-R-F

Model: Guided cylinder, short stroke

Ⓐ Bearing : Metal bush bearing
Ⓑ Model No. : Rubber scraper
Ⓒ Bore size : ø20 mm
Ⓓ Port thread : M5
Ⓔ Stroke : 25 mm
Ⓕ Switch model No. : Reed T0H, lead wire length 1 m
Ⓖ Switch quantity : 1 on rod side
Ⓗ Option : End plate material: steel

Ⓔ Stroke

Series	Stroke (mm)		Applicable bore size						
			ø20	ø25	ø32	ø40	ø50	ø63	ø80
STS	Standard stroke	25	●	●	●	●	●	●	●
		50	●	●	●	●	●	●	●
		75							●
		100							●
	Min. stroke *1		5						
	Custom stroke *1, 2		In 5 mm increments						
STL	Standard stroke	50	●	●	●	●	●	●	
		75	●	●	●	●	●	●	●
		100	●	●	●	●	●	●	●
		125	●	●	●	●	●	●	●
		150	●	●	●	●	●	●	●
		175	●	●	●	●	●	●	●
		200	●	●	●	●	●	●	●
		225	●	●	●	●	●	●	●
		250	●	●	●	●	●	●	●
		275	●	●	●	●	●	●	●
		300	●	●	●	●	●	●	●
		325	●	●	●	●	●	●	●
		350	●	●	●	●	●	●	●
		375	●	●	●	●	●	●	●
		400	●	●	●	●	●	●	●
	Min. stroke *1		30						55
	Custom stroke *1, 2		In 5 mm increments						

*1 : The total dimensions are the same as the longer standard stroke.
*2 : Special total length for custom stroke can be provided when a custom stroke is used. (Made to order)

How to order switch

SW - T0V

Switch model No.
(Item Ⓕ on page 520)

LCM
LCR
LCG
LCW
LCX
STM
STG
STS/STL
STR2
UCA2
ULK*
JSK/M2
JSG
JSC3/JSC4
USSD
UFCD
USC
UB
JSB3
LMB
LML
HCM
HCA
LBC
CAC4
UCAC2
CAC-N
UCAC-N
RCS2
RCC2
PCC
SHC
MCP
GLC
MFC
BBS
RRC
GRC
RV3*
NHS
HRL
LN
Hand
Chuk
MecHnd/Chuk
ShkAbs
FJ
FK
SpdContr
Ending

Internal structure and parts list

● Rubber scraper

STS-$^{M}_{B}$G

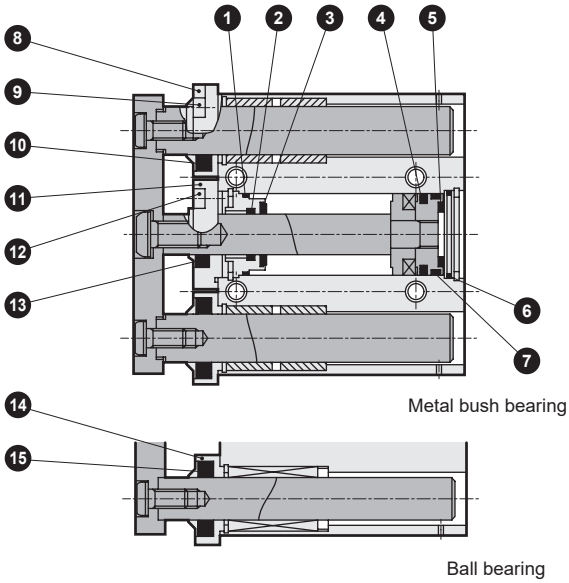

STL-$^{M}_{B}$G

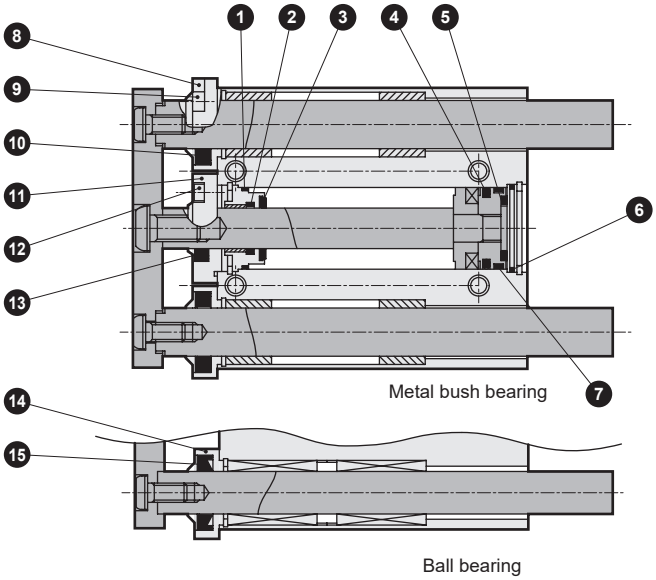

● Coil scraper

STS-$^{M}_{B}$G1

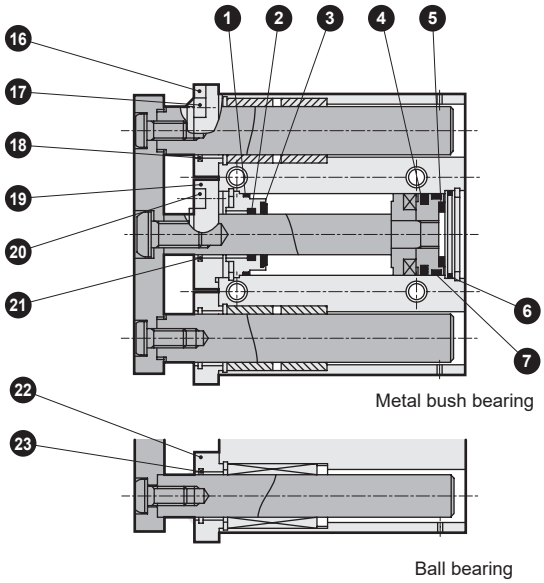

STL-$^{M}_{B}$G1

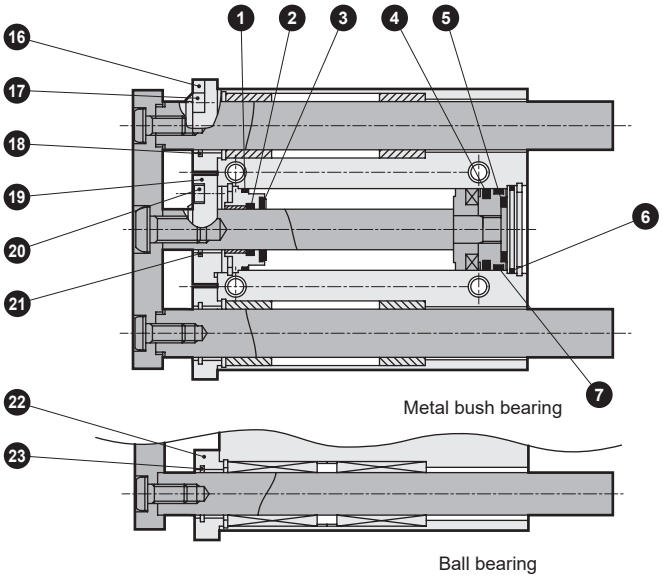

Parts list (Parts not listed below are the same as those of the double acting/standard single rod. Refer to pages 453 to 457.)

No.	Part name	Material	Remarks	No.	Part name	Material	Remarks
ST$^{S}_{L}$-$^{M}_{B}$G (Rubber scraper)				**ST$^{S}_{L}$-$^{M}_{B}$G1 (Coil scraper)**			
1	Metal gasket	Nitrile rubber		1	Metal gasket	Nitrile rubber	
2	Rod packing	Nitrile rubber		2	Rod packing	Nitrile rubber	
3	Cushion rubber (R)	Urethane rubber		3	Cushion rubber (R)	Urethane rubber	
4	Piston packing	Nitrile rubber		4	Piston packing	Nitrile rubber	
5	Cushion rubber (H)	Urethane rubber		5	Cushion rubber (H)	Urethane rubber	
6	O-ring	Nitrile rubber		6	O-ring	Nitrile rubber	
7	Wear ring	Acetal resin		7	Wear ring	Acetal resin	
8	Adaptor B	Aluminum alloy	Alumite	16	Adaptor B	Aluminum alloy	Alumite
9	Hexagon socket head cap screw	Alloy steel	Zinc chromate	17	Hexagon socket head cap screw	Alloy steel	Zinc chromate
10	Rubber scraper	Nitrile rubber + steel		18	Coil scraper	Phosphor bronze	
11	Adaptor A	Aluminum alloy	Alumite	19	Adaptor A	Aluminum alloy	Alumite
12	Hexagon socket head cap screw	Alloy steel	Zinc chromate	20	Hexagon socket head cap screw	Alloy steel	Zinc chromate
13	Rubber scraper	Nitrile rubber + steel		21	Coil scraper	Phosphor bronze	
14	Adaptor C	Aluminum alloy	Alumite	22	Adaptor C	Aluminum alloy	Alumite
15	Rubber scraper	Nitrile rubber + steel		23	Coil scraper	Phosphor bronze	

Repair parts list (Note: specify the kit No. when ordering repair parts.)

● STS-MG/STL-MG (Rubber scraper)

Bore size (mm)	Kit No.	Repair parts No.
ø20	STS-MG-20K	❶ ❷ ❸ ❹ ❺ ❻ ❼ ❿ ⓭
ø25	STS-MG-25K	
ø32	STS-MG-32K	
ø40	STS-MG-40K	
ø50	STS-MG-50K	
ø63	STS-MG-63K	
ø80	STS-MG-80K	

● STS-BG/STL-BG (Rubber scraper)

Bore size (mm)	Kit No.	Repair parts No.
ø20	STS-BG-20K	❶ ❷ ❸ ❹ ❺ ❻ ❼ ⓭ ⓯
ø25	STS-BG-25K	
ø32	STS-BG-32K	
ø40	STS-BG-40K	
ø50	STS-BG-50K	
ø63	STS-BG-63K	
ø80	STS-BG-80K	

● STS-MG1/STL-MG1 (Coil scraper)

Bore size (mm)	Kit No.	Repair parts No.
ø20	STS-MG1-20K	❶ ❷ ❸ ❹ ❺ ❻ ❼ ⓲ ㉑
ø25	STS-MG1-25K	
ø32	STS-MG1-32K	
ø40	STS-MG1-40K	
ø50	STS-MG1-50K	
ø63	STS-MG1-63K	
ø80	STS-MG1-80K	

● STS-BG1/STL-BG1 (Coil scraper)

Bore size (mm)	Kit No.	Repair parts No.
ø20	STS-BG1-20K	❶ ❷ ❸ ❹ ❺ ❻ ❼ ㉑ ㉓
ø25	STS-BG1-25K	
ø32	STS-BG1-32K	
ø40	STS-BG1-40K	
ø50	STS-BG1-50K	
ø63	STS-BG1-63K	
ø80	STS-BG1-80K	

LCM
LCR
LCG
LCW
LCX
STM
STG
STS/STL
STR2
UCA2
ULK*
JSK/M2
JSG
JSC3/JSC4
USSD
UFCD
USC
UB
JSB3
LMB
LML
HCM
HCA
LBC
CAC4
UCAC2
CAC-N
UCAC-N
RCS2
RCC2
PCC
SHC
MCP
GLC
MFC
BBS
RRC
GRC
RV3*
NHS
HRL
LN
Hand
Chuk
MecHnd/Chuk
ShkAbs
FJ
FK
SpdContr
Ending

Dimensions

● Coil scraper (Dimensions not listed below are the same as those of the double acting/single rod on pages 459 to 462.)

STS-$^{M}_{B}$G1

● ø20/ø25

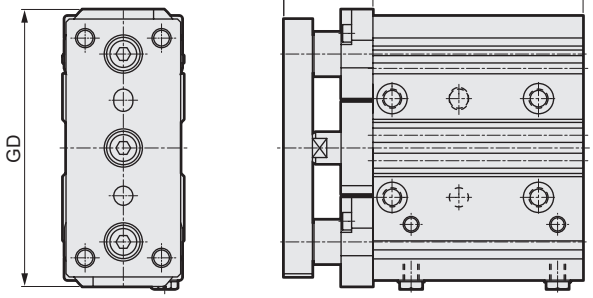

● ø32/ø40/ø50/ø63

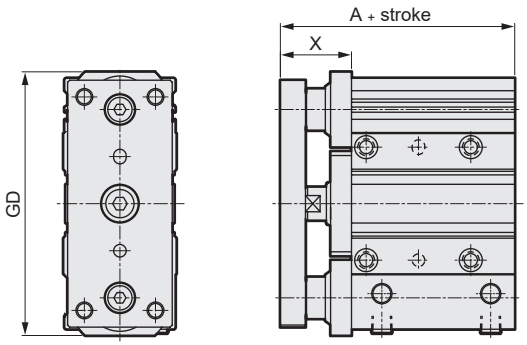

● ø80

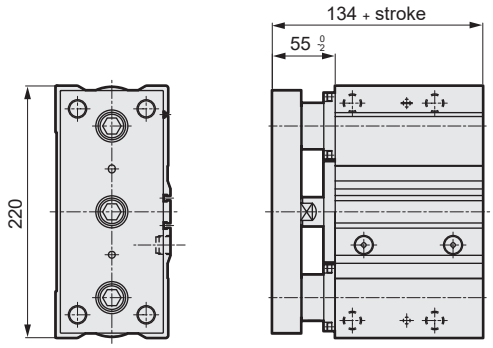

● Rubber scraper (Dimensions not listed below are the same as those of the double acting/single rod on pages 459 to 462.)

STS-$^{M}_{B}$G

● ø20/ø25

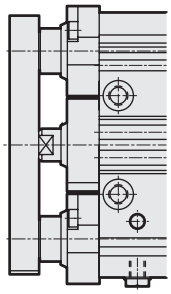

● ø32/ø40/ø50/ø63

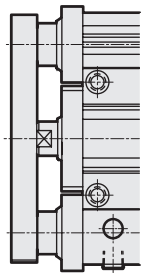

● ø80

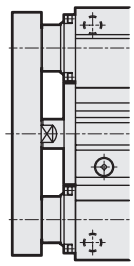

Code / Bore size (mm)	A	X	GD
ø20	68	28 $^{0}_{-2}$	87
ø25	69	28 $^{0}_{-2}$	91
ø32	83	34 $^{0}_{-2}$	117
ø40	87	34 $^{0}_{-2}$	126
ø50	92	37 $^{0}_{-2}$	152
ø63	98	37 $^{0}_{-2}$	166
ø80	134	55 $^{0}_{-2}$	220

*1 : When using a custom stroke, the dimensions are the same as the longer standard stroke.

Dimensions

● Coil scraper
(Dimensions not listed below are the same as those of double acting/single rod on pages 464 to 467.)

STL-$^{M}_{B}$G1

● ø20/ø25

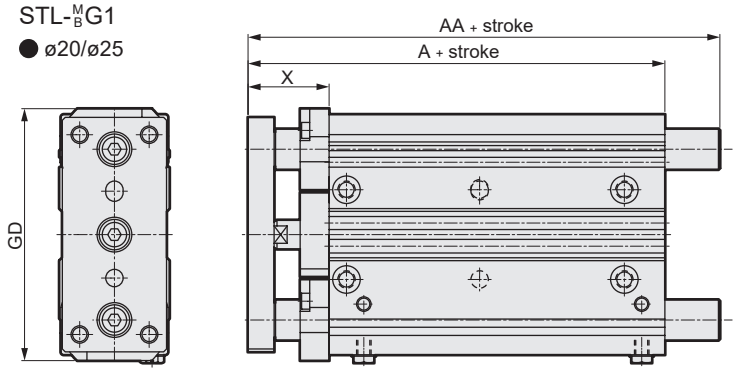

● ø32/ø40/ø50/ø63

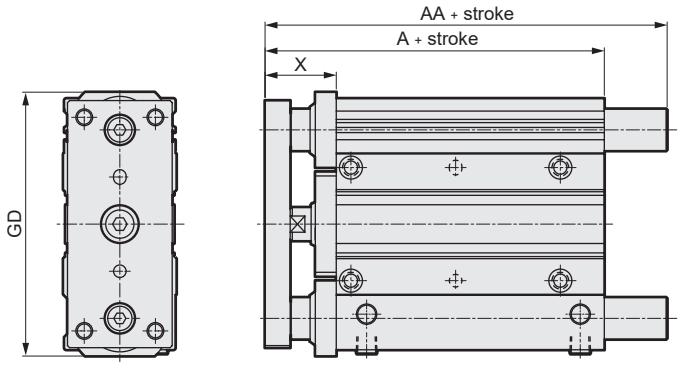

● ø80

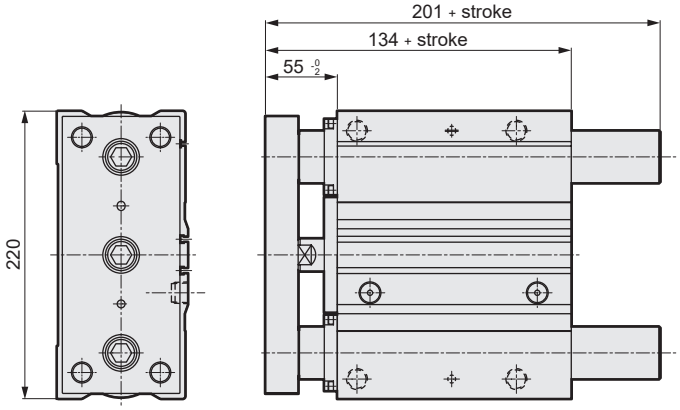

● Rubber scraper
(Dimensions not listed below are the same as those of double acting/single rod on pages 464 to 467.)

STL-$^{M}_{B}$G

● ø20/ø25

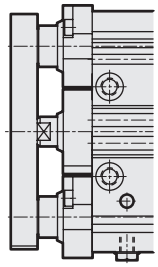

● ø32/ø40/ø50/ø63

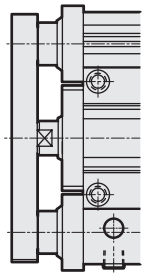

● ø80

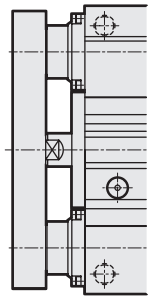

Code / Bore size (mm)	A	AA	X	GD
ø20	68	87	28 $^{0}_{-2}$	87
ø25	69	87	28 $^{0}_{-2}$	91
ø32	83	117	34 $^{0}_{-2}$	117
ø40	87	117	34 $^{0}_{-2}$	126
ø50	92	140	37 $^{0}_{-2}$	152
ø63	98	140	37 $^{0}_{-2}$	166
ø80	134	201	55 $^{0}_{-2}$	220

*1 : When using a custom stroke, the dimensions are the same as the longer standard stroke.

Guided cylinder Double acting/coolant proof

STS/STL-$^{M}_{B}$G$^{2}_{3}$ Series

● Bore size: ø20/ø25/ø32/ø40/ø50/ø63/ø80

JIS symbol

Specifications

Item	STS/STL-$^{M}_{B}$G$^{2}_{3}$						
Bore size mm	ø20	ø25	ø32	ø40	ø50	ø63	ø80
Actuation	Double acting/coolant proof						
Working fluid	Compressed air						
Max. working pressure MPa	1.0 (≈150 psi, 10 bar)						
Min. working pressure MPa	0.2 (≈29 psi, 2 bar)		0.15 (≈22 psi, 1.5 bar)				
Proof pressure MPa	1.6 (≈230 psi, 16 bar)						
Ambient temperature °C	-10 (14°F) to 60 (140°F) (no freezing)						
Port size	M5		Rc1/8		Rc1/4		Rc3/8
Stroke tolerance mm	$^{+2.0}_{0}$						
Working piston speed mm/s	50 to 500					50 to 300	
Cushion	Rubber cushioned (urethane rubber)						
Lubrication	Not required (use turbine oil class 1 ISO VG32 if necessary for lubrication)						
Allowable absorbed energy J	0.157	0.157	0.401	0.627	0.980	1.560	2.510

Stroke length

● Scraper

· Short stroke length STS

Bore size (mm)	Standard stroke length (mm)	Max. stroke length (mm)	Min. stroke length (mm)	Min. stroke with switch (mm)
ø20	25, 50	50	5	5 With one or two switches
ø25				
ø32				
ø40				
ø50				
ø63				
ø80	25, 50, 75, 100	100		

· Long stroke length STL

Bore size (mm)	Standard stroke length (mm)	Max. stroke length (mm)	Min. stroke length (mm)	Min. stroke with switch (mm)
ø20	50, 75, 100, 125, 150 175, 200, 225, 250 275, 300, 325, 350 375, 400	400	30	30 With one or two switches
ø25				
ø32				
ø40				
ø50				
ø63				
ø80	75, 100, 125, 150, 175 200, 225, 250, 275, 300 325, 350, 375, 400		55	55 With one or two switches

*1 : The custom stroke length is available in 5 mm increments.
However, the total length is the same as that of the next longer standard stroke length.
*2 : Stroke length over standard to maximum is available in increments of 25.

⚠ CAUTION: The rod side with scraper is coolant proof but the head side without scraper is not.
Therefore, protect it with a cover.

Switch specifications

Type/model No.	Proximity switch specifications	
Item	T2YLH/T2YLV	T3YLH/T3YLV
Applications	Dedicated for programmable controller	Programmable controller, relay
Output method	-	NPN output
Power supply voltage	-	10 to 28 VDC
Load voltage/current	10 to 30 VDC, 5 to 20 mA *3	30 VDC or less, 50 mA or less
Indicator lamp	Red/green LED (Lit when ON)	
Leakage current	1 mA or less	10 μA or less
Shock resistance	980 m/S^2	
Weight g	1 m:33 3 m:87 5 m:142	

*1 : Refer to Ending Page 1 for detailed switch specifications and dimensions.
*2 : Switches with connectors are also available. Refer to Ending Page 28.
*3 : The max. load current is 20 mA at 25°C. The current is lower than 20 mA if the operating ambient temperature around the switch is higher than 25˚C. (5 to 10 mA at 60°C)

Theoretical thrust table

(Unit: N)

Bore size (mm)	Operating direction	Working pressure MPa									
		0.15	0.2	0.3	0.4	0.5	0.6	0.7	0.8	0.9	1.0
ø20	Push	-	62.8	94.2	1.26×10^2	1.57×10^2	1.88×10^2	2.20×10^2	2.51×10^2	2.83×10^2	3.14×10^2
	Pull	-	47.1	70.7	94.2	1.18×10^2	1.41×10^2	1.65×10^2	1.88×10^2	2.12×10^2	2.36×10^2
ø25	Push	-	98.2	1.47×10^2	1.96×10^2	2.45×10^2	2.95×10^2	3.44×10^2	3.93×10^2	4.42×10^2	4.91×10^2
	Pull	-	75.6	1.13×10^2	1.51×10^2	1.89×10^2	2.27×10^2	2.64×10^2	3.02×10^2	3.40×10^2	3.78×10^2
ø32	Push	1.21×10^2	1.61×10^2	2.41×10^2	3.22×10^2	4.02×10^2	4.83×10^2	5.63×10^2	6.43×10^2	7.24×10^2	8.04×10^2
	Pull	90.5	1.21×10^2	1.81×10^2	2.41×10^2	3.02×10^2	3.62×10^2	4.22×10^2	4.83×10^2	5.43×10^2	6.03×10^2
ø40	Push	1.88×10^2	2.51×10^2	3.77×10^2	5.03×10^2	6.28×10^2	7.54×10^2	8.80×10^2	1.01×10^3	1.13×10^3	1.26×10^3
	Pull	1.58×10^2	2.11×10^2	3.17×10^2	4.22×10^2	5.28×10^2	6.33×10^2	7.39×10^2	8.44×10^2	9.50×10^2	1.06×10^3
ø50	Push	2.95×10^2	3.93×10^2	5.89×10^2	7.85×10^2	9.82×10^2	1.18×10^3	1.37×10^3	1.57×10^3	1.77×10^3	1.96×10^3
	Pull	2.47×10^2	3.30×10^2	4.95×10^2	6.60×10^2	8.25×10^2	9.90×10^2	1.15×10^3	1.32×10^3	1.48×10^3	1.65×10^3
ø63	Push	4.68×10^2	6.23×10^2	9.35×10^2	1.25×10^3	1.56×10^3	1.87×10^3	2.18×10^3	2.49×10^3	2.81×10^3	3.12×10^3
	Pull	4.20×10^2	5.61×10^2	8.41×10^2	1.12×10^3	1.40×10^3	1.68×10^3	1.96×10^3	2.24×10^3	2.52×10^3	2.80×10^3
ø80	Push	7.54×10^2	1.01×10^3	1.51×10^3	2.01×10^3	2.51×10^3	3.02×10^3	3.52×10^3	4.02×10^3	4.52×10^3	5.03×10^3
	Pull	6.80×10^2	9.07×10^2	1.36×10^3	1.81×10^3	2.27×10^3	2.72×10^3	3.17×10^3	3.63×10^3	4.08×10^3	4.54×10^3

For cylinder weight, refer to pages 558 to 561.

How to order

● Short stroke length

Without switch (built-in magnet for switch)

STS - M G2 - 20 ◯ - 50 ———— E

With switch (built-in magnet for switch)

STS - M G2 - 20 ◯ - 50 - T2YLH - R - E

● Long stroke length

Without switch (built-in magnet for switch)

STL - M G2 - 20 ◯ - 50 ———— E

With switch (built-in magnet for switch)

STL - M G2 - 20 ◯ - 50 - T2YLH - R - E

Ⓐ Bearing

Ⓑ Degree of protection level

Ⓒ Bore size

Ⓓ Port thread

Ⓔ Stroke length

■ Custom stroke length

Available in 5 mm increments. However, the total length is the same as that of the next longer standard stroke length.

Ⓕ Switch model No. *2

Ⓖ Switch quantity

Ⓗ Option

Code	Description
Ⓐ Bearing	
M	Metal bush bearing
B	Ball bearing
Ⓑ Degree of protection level	
G2	Coolant proof scraper + packing NBR
G3	Coolant proof scraper + packing FKM
Ⓒ Bore size (mm)	
20	ø20
25	ø25
32	ø32
40	ø40
50	ø50
63	ø63
80	ø80
Ⓓ Port thread	
Blank	M5 (ø20, ø25)
	Rc thread (ø32 to ø80)
NN	NPT thread (ø32 and over) made-to-order product
GN	G thread (ø32 and over) made-to-order product
Ⓔ Stroke length (mm)	
Refer to the stroke length table on the following page.	

Ⓕ Switch model No.

Axial lead wire	Radial lead wire	Contact	Voltage	Indicator	Lead wire
T2YLH*	T2YLV*	Proximity	DC	2-color display	2-wire
T3YLH*	T3YLV*				3-wire

* Lead wire length	
Blank	1 m (standard)
3	3 m (option)
5	5 m (option)

Ⓖ Switch quantity	
R	1 on rod side
H	1 on head side
D	2

Ⓗ Option		
M1	*3	Corrosion proof (Piston rod, guide rod and end plate material: SUS) (made-to-order product)

⚠ Precautions for model No. selection

*1 : Refer to pages 444 to 447 for combinations of variations/options.
*2 : Switches are shipped with the product. Contact CKD if assembling before shipment is necessary.
*3 : Refer to page 458 for material details.

[Example of model No.]

STS-MG2-20-50-T2YLH-R

Model: Guided cylinder, short stroke length

Ⓐ Bearing : Metal bush bearing
Ⓑ Degree of protection level : Coolant proof scraper + packing NBR
Ⓒ Bore size : ø20 mm
Ⓓ Port thread : M5
Ⓔ Stroke length : 50 mm
Ⓕ Switch model No. : Proximity switch T2YLH, lead wire 1 m
Ⓖ Switch quantity : 1 on rod side

Ⓔ Stroke length

Series	Stroke length (mm)		Applicable bore size						
			ø20	ø25	ø32	ø40	ø50	ø63	ø80
STS	Standard stroke length	25	●	●	●	●	●	●	●
		50	●	●	●	●	●	●	●
		75							●
		100							●
	Min. stroke length *1		5						
	Custom stroke *1, *2		In 5 mm increments						
STL	Standard stroke length	50	●	●	●	●	●	●	
		75	●	●	●	●	●	●	●
		100	●	●	●	●	●	●	●
		125	●	●	●	●	●	●	●
		150	●	●	●	●	●	●	●
		175	●	●	●	●	●	●	●
		200	●	●	●	●	●	●	●
		225	●	●	●	●	●	●	●
		250	●	●	●	●	●	●	●
		275	●	●	●	●	●	●	●
		300	●	●	●	●	●	●	●
		325	●	●	●	●	●	●	●
		350	●	●	●	●	●	●	●
		375	●	●	●	●	●	●	●
		400	●	●	●	●	●	●	●
	Min. stroke length *1		30						55
	Custom stroke *1, *2		In 5 mm increments						

*1 : The total dimensions are the same as the longer standard stroke length.
*2 : Special total length for custom stroke length can be provided when a custom stroke length is used. (Made to order)

How to order switch

SW - T2YLH

Switch model No.
(Item Ⓕ on page 528)

LCM
LCR
LCG
LCW
LCX
STM
STG
STS/STL
STR2
UCA2
ULK*
JSK/M2
JSG
JSC3/JSC4
USSD
UFCD
USC
UB
JSB3
LMB
LML
HCM
HCA
LBC
CAC4
UCAC2
CAC-N
UCAC-N
RCS2
RCC2
PCC
SHC
MCP
GLC
MFC
BBS
RRC
GRC
RV3*
NHS
HRL
LN
Hand
Chuk
MecHnd/Chuk
ShkAbs
FJ
FK
SpdContr
Ending

Internal structure and parts list

● Degree of protection: Packing NBR/FKM

STS-$^{M}_{B}$G2

STS-$^{M}_{B}$G3

● ø20/ø25

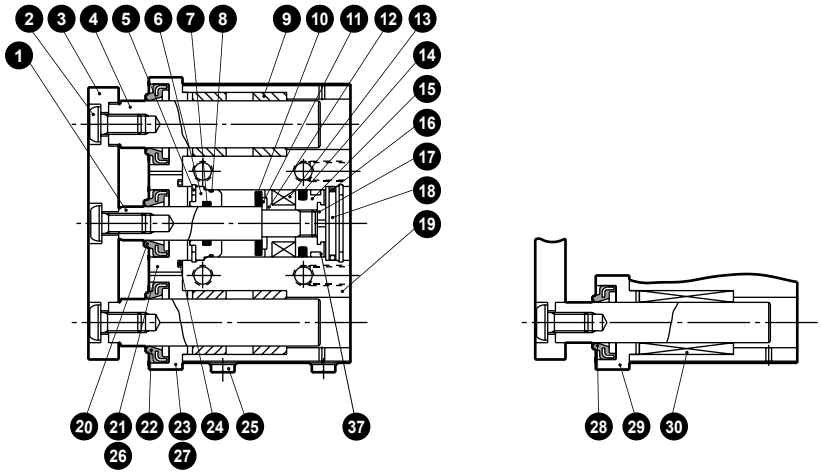

● ø32/ø40/ø50/ø63

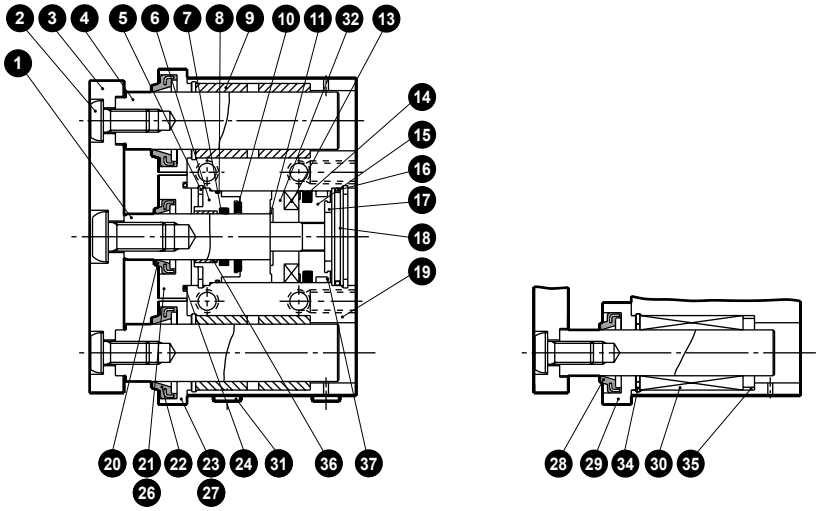

● ø80

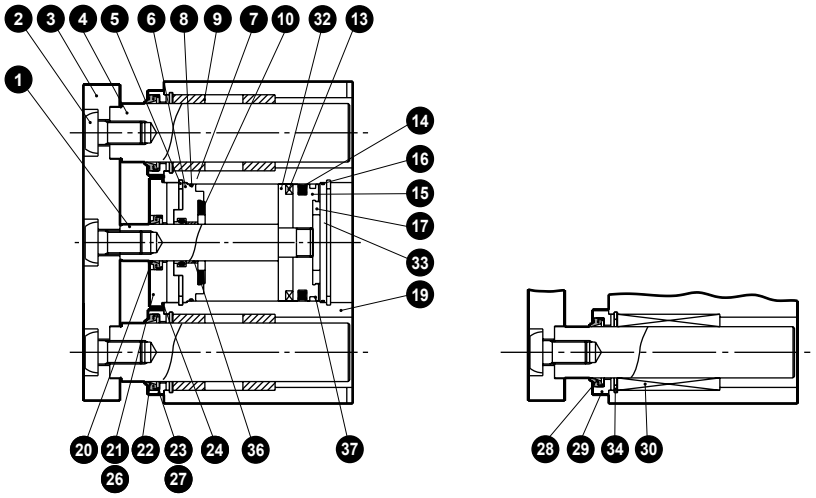

Parts list

No.	Part name		Material	Remarks
1	Piston rod		Stainless steel	Industrial chrome plating
2	Hexagon socket button head bolt		Stainless steel	
3	End plate		Aluminum alloy	Alumite
4	Guide rod		Stainless steel	Industrial chrome plating
5	C type snap ring for hole		Stainless steel	
6	Rod metal		Special aluminum	Alumite
7	Rod packing	G2	Nitrile rubber	
		G3	Fluoro rubber	
8	Metal gasket	G2	Nitrile rubber	
		G3	Fluoro rubber	
9	Metal		Oil impregnated bearing alloy	
10	Cushion rubber (R)		Urethane rubber	
11	Spacer washer		Stainless steel	ø20 to ø50
12	Spacer		Polyamide	ø20 to ø50
13	Magnet			
14	Piston packing	G2	Nitrile rubber	
		G3	Fluoro rubber	
15	Piston		Aluminum alloy	Chromate
16	O-ring	G2	Nitrile rubber	
		G3	Fluoro rubber	
17	Cushion rubber (H)		Urethane rubber	
18	Base plate		Aluminum alloy	ø20 to ø63
19	Tube body		Aluminum alloy	Hard alumite

No.	Part name		Material	Remarks
20	Scraper	G2	Nitrile rubber	
		G3	Fluoro rubber	
21	Adaptor A		Aluminum alloy	Alumite
22	Scraper	G2	Nitrile rubber	
		G3	Fluoro rubber	
23	Adaptor B		Aluminum alloy	Alumite
24	O-ring	G2	Nitrile rubber	
		G3	Fluoro rubber	
25	Plug		Copper alloy	Nickeling
26	Hexagon socket head cap screw		Stainless steel	
27	Hexagon socket head cap screw		Stainless steel	
28	Scraper	G2	Nitrile rubber	
		G3	Fluoro rubber	
29	Adaptor C		Aluminum alloy	Alumite
30	Bearing		Stainless steel	
31	Hexagon socket flush plug		Stainless steel	ø32 to ø63
32	Spacer		Aluminum alloy	ø63.ø80
33	Base plate		Steel	Zinc chromate ø80
34	C type snap ring for hole		Stainless steel	ø32 to ø80
35	Collar		Aluminum alloy	ø32 to ø63
36	Bush		Oiles drymet	ø32 to ø80
37	Wear ring		Acetal resin	

Repair parts list

● STS-MG2 (metal bush bearing, nitrile rubber packing)

Bore size (mm)	Kit No.	Repair parts No.
ø20	STS-MG2-20K	❼ ❽ ❿ ⓮ ⓰ ⓱ ⓴ ㉒ ㉔ ㊲
ø25	STS-MG2-25K	
ø32	STS-MG2-32K	
ø40	STS-MG2-40K	
ø50	STS-MG2-50K	
ø63	STS-MG2-63K	
ø80	STS-MG2-80K	

● STS-BG2 (ball bearing, nitrile rubber packing)

Bore size (mm)	Kit No.	Repair parts No.
ø20	STS-BG2-20K	❼ ❽ ❿ ⓮ ⓰ ⓱ ⓴ ㉔ ㉘ ㊲
ø25	STS-BG2-25K	
ø32	STS-BG2-32K	
ø40	STS-BG2-40K	
ø50	STS-BG2-50K	
ø63	STS-BG2-63K	
ø80	STS-BG2-80K	

● STS-MG3 (metal bush bearing, fluoro rubber packing)

Bore size (mm)	Kit No.	Repair parts No.
ø20	STS-MG3-20K	❼ ❽ ❿ ⓮ ⓰ ⓱ ⓴ ㉒ ㉔ ㊲
ø25	STS-MG3-25K	
ø32	STS-MG3-32K	
ø40	STS-MG3-40K	
ø50	STS-MG3-50K	
ø63	STS-MG3-63K	
ø80	STS-MG3-80K	

● STS-BG3 (ball bearing, fluoro rubber packing)

Bore size (mm)	Kit No.	Repair parts No.
ø20	STS-BG3-20K	❼ ❽ ❿ ⓮ ⓰ ⓱ ⓴ ㉔ ㉘ ㊲
ø25	STS-BG3-25K	
ø32	STS-BG3-32K	
ø40	STS-BG3-40K	
ø50	STS-BG3-50K	
ø63	STS-BG3-63K	
ø80	STS-BG3-80K	

Note : Specify the kit No. when placing an order.

LCM
LCR
LCG
LCW
LCX
STM
STG
STS/STL
STR2
UCA2
ULK*
JSK/M2
JSG
JSC3/JSC4
USSD
UFCD
USC
UB
JSB3
LMB
LML
HCM
HCA
LBC
CAC4
UCAC2
CAC-N
UCAC-N
RCS2
RCC2
PCC
SHC
MCP
GLC
MFC
BBS
RRC
GRC
RV3*
NHS
HRL
LN
Hand
Chuk
MecHnd/Chuk
ShkAbs
FJ
FK
SpdContr
Ending

Internal structure and parts list

● Degree of protection: Packing NBR/FKM

STL-$^{M}_{B}$G2

STL-$^{M}_{B}$G3

● ø20/ø25

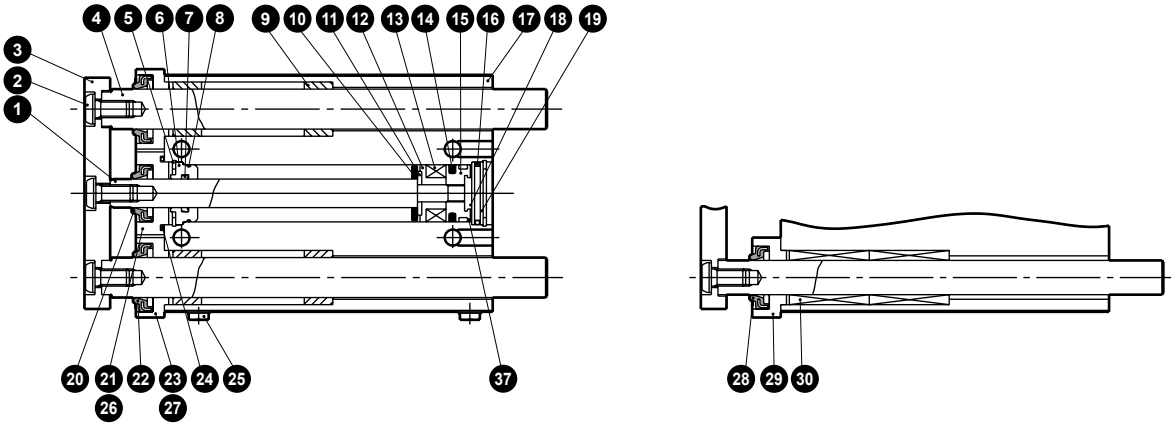

● ø32/ø40/ø50/ø63

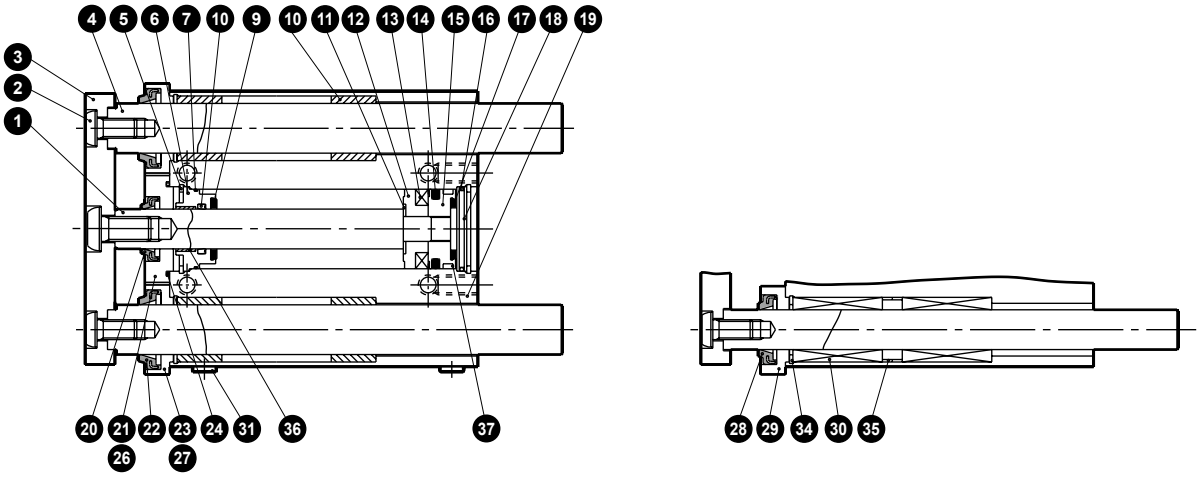

● ø80

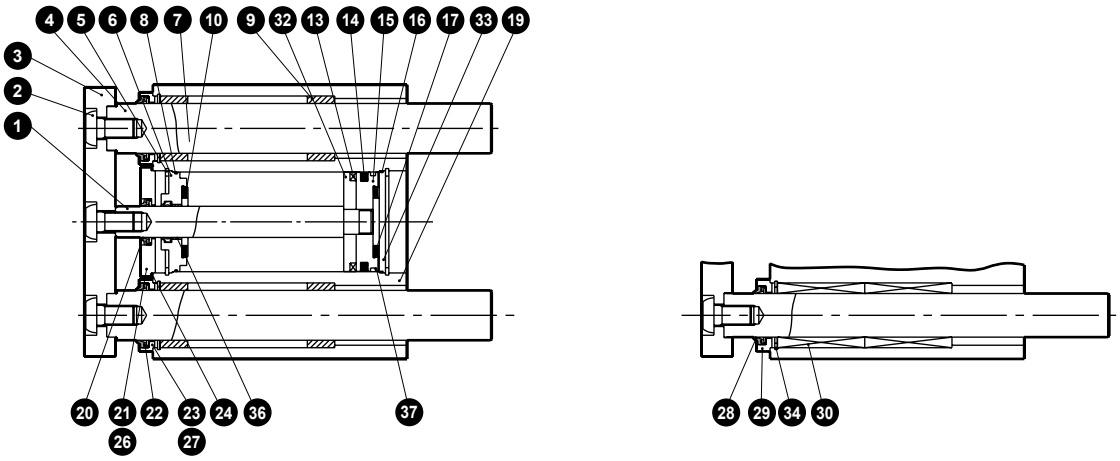

Parts list

No.	Part name		Material	Remarks
1	Piston rod		Stainless steel	Industrial chrome plating
2	Hexagon socket button head bolt		Stainless steel	
3	End plate		Aluminum alloy	Alumite
4	Guide rod		Stainless steel	Industrial chrome plating
5	C type snap ring for hole		Stainless steel	
6	Rod metal		Special aluminum	Alumite
7	Rod packing	G2	Nitrile rubber	
		G3	Fluoro rubber	
8	Metal gasket	G2	Nitrile rubber	
		G3	Fluoro rubber	
9	Metal		Oil impregnated bearing alloy	
10	Cushion rubber (R)		Urethane rubber	
11	Spacer washer		Stainless steel	ø20 to ø50
12	Spacer		Polyamide	ø20 to ø50
13	Magnet			
14	Piston packing	G2	Nitrile rubber	
		G3	Fluoro rubber	
15	Piston		Aluminum alloy	Chromate
16	O-ring	G2	Nitrile rubber	
		G3	Fluoro rubber	
17	Cushion rubber (H)		Urethane rubber	
18	Base plate		Aluminum alloy	ø20 to ø63
19	Tube body		Aluminum alloy	Hard alumite

No.	Part name		Material	Remarks
20	Scraper	G2	Nitrile rubber	
		G3	Fluoro rubber	
21	Adaptor A		Aluminum alloy	Alumite
22	Scraper	G2	Nitrile rubber	
		G3	Fluoro rubber	
23	Adaptor B		Aluminum alloy	Alumite
24	O-ring	G2	Nitrile rubber	
		G3	Fluoro rubber	
25	Plug		Copper alloy	Nickeling
26	Hexagon socket head cap screw		Stainless steel	
27	Hexagon socket head cap screw		Stainless steel	
28	Scraper	G2	Nitrile rubber	
		G3	Fluoro rubber	
29	Adaptor C		Aluminum alloy	Alumite
30	Bearing		Stainless steel	
31	Hexagon socket flush plug		Stainless steel	ø32 to ø63
32	Spacer		Aluminum alloy	ø63.ø80
33	Base plate		Steel	Zinc chromate ø80
34	C type snap ring for hole		Stainless steel	ø32 to ø80
35	Collar		Aluminum alloy	ø32 to ø63
36	Bush		Oiles drymet	ø32 to ø80
37	Wear ring		Acetal resin	

Repair parts list

● STL-MG2 (metal bush bearing, nitrile rubber packing)

Bore size (mm)	Kit No.	Repair parts No.
ø20	STS-MG2-20K	⑦ ⑧ ⑩ ⑭ ⑯ ⑰ ⑳ ㉒ ㉔ ㊲
ø25	STS-MG2-25K	
ø32	STS-MG2-32K	
ø40	STS-MG2-40K	
ø50	STS-MG2-50K	
ø63	STS-MG2-63K	
ø80	STS-MG2-80K	

● STL-BG2 (ball bearing, nitrile rubber packing)

Bore size (mm)	Kit No.	Repair parts No.
ø20	STS-BG2-20K	⑦ ⑧ ⑩ ⑭ ⑯ ⑰ ⑳ ㉔ ㉘ ㊲
ø25	STS-BG2-25K	
ø32	STS-BG2-32K	
ø40	STS-BG2-40K	
ø50	STS-BG2-50K	
ø63	STS-BG2-63K	
ø80	STS-BG2-80K	

● STL-MG3 (metal bush bearing, fluoro rubber packing)

Bore size (mm)	Kit No.	Repair parts No.
ø20	STS-MG3-20K	⑦ ⑧ ⑩ ⑭ ⑯ ⑰ ⑳ ㉒ ㉔ ㊲
ø25	STS-MG3-25K	
ø32	STS-MG3-32K	
ø40	STS-MG3-40K	
ø50	STS-MG3-50K	
ø63	STS-MG3-63K	
ø80	STS-MG3-80K	

Note : Specify the kit No. when placing an order.

● STL-BG3 (ball bearing, fluoro rubber packing)

Bore size (mm)	Kit No.	Repair parts No.
ø20	STS-BG3-20K	⑦ ⑧ ⑩ ⑭ ⑯ ⑰ ⑳ ㉔ ㉘ ㊲
ø25	STS-BG3-25K	
ø32	STS-BG3-32K	
ø40	STS-BG3-40K	
ø50	STS-BG3-50K	
ø63	STS-BG3-63K	
ø80	STS-BG3-80K	

LCM
LCR
LCG
LCW
LCX
STM
STG
STS/STL
STR2
UCA2
ULK*
JSK/M2
JSG
JSC3/JSC4
USSD
UFCD
USC
UB
JSB3
LMB
LML
HCM
HCA
LBC
CAC4
UCAC2
CAC-N
UCAC-N
RCS2
RCC2
PCC
SHC
MCP
GLC
MFC
BBS
RRC
GRC
RV3*
NHS
HRL
LN
Hand
Chuk
MecHnd/Chuk
ShkAbs
FJ
FK
SpdContr
Ending

Dimensions

● Coolant proof (Dimensions not listed below are the same as those of the double acting/single rod.)
STS-$^{M}_{B}$G2/G3

● ø20/ø25

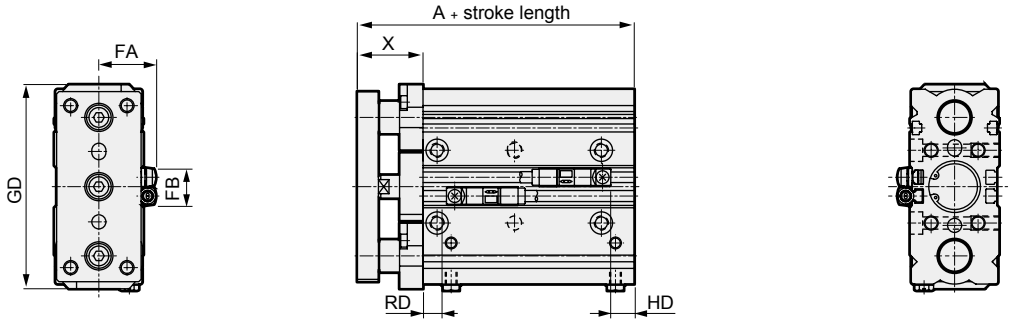

● ø32/ø40/ø50/ø63

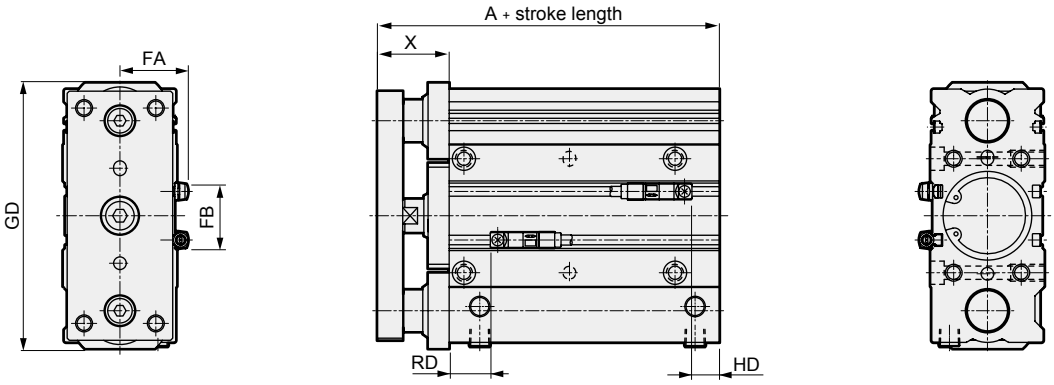

● ø80

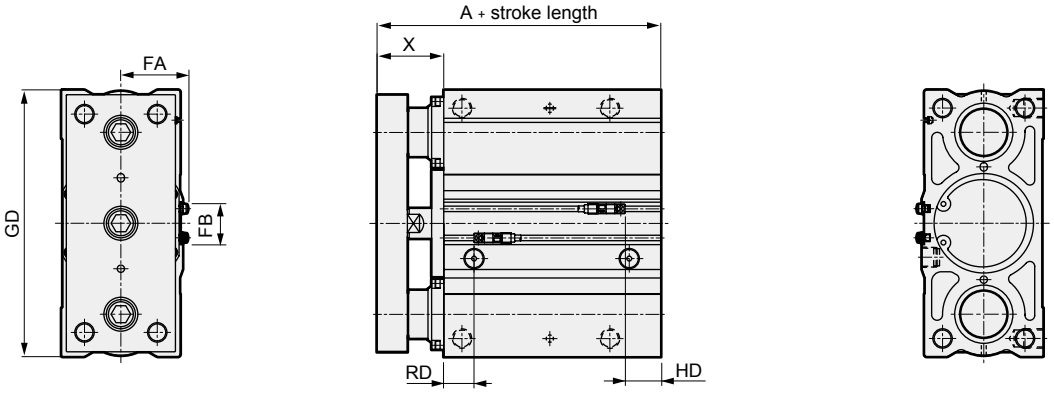

Code / Bore size (mm)	A	GD	X	RD	HD	FA	FB
ø20	68	87	28 $^{0}_{-2}$	9.5	8	24.3	16
ø25	69	91	28 $^{0}_{-2}$	11.5	7.5	26.3	17
ø32	83	117	34 $^{0}_{-2}$	16	12	28.8	24
ø40	87	126	34 $^{0}_{-2}$	19.5	13	32.3	31
ø50	92	152	37 $^{0}_{-2}$	21.5	13.5	38.3	32
ø63	98	166	37 $^{0}_{-2}$	18.5	21.5	44.8	32
ø80	134	220	55 $^{0}_{-2}$	25	33	55.3	32

*1 : When using a custom stroke length, the dimensions are the same as the longer standard stroke length.

Dimensions

CAD

● Coolant proof (Dimensions not listed below are the same as those of the double acting/single rod.)
STL-$^{M}_{B}$G2/G3

● ø20/ø25

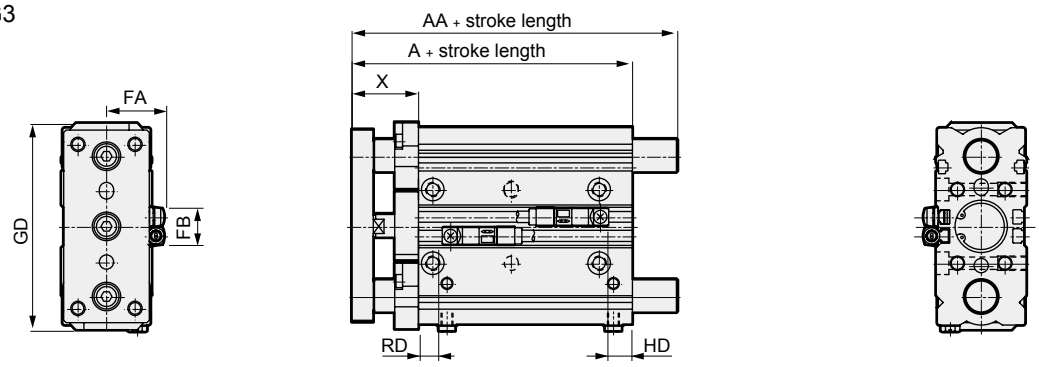

● ø32/ø40/ø50/ø63

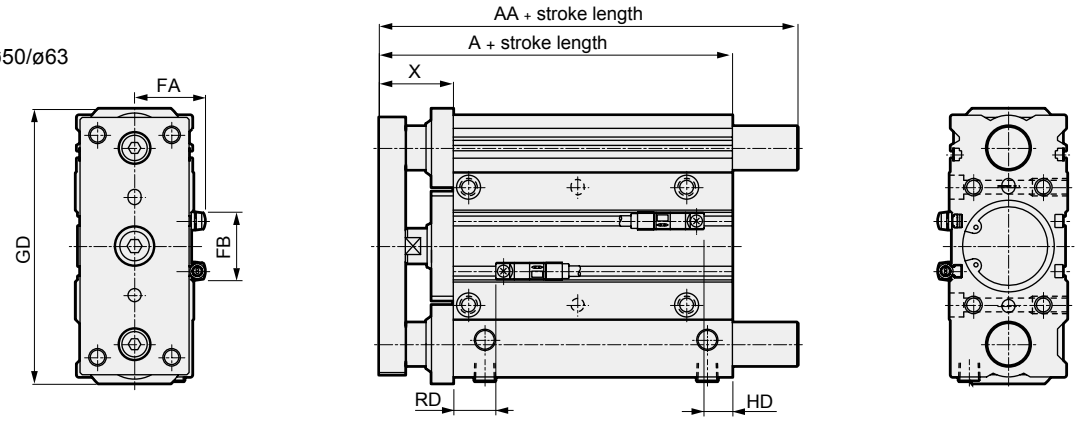

● ø80

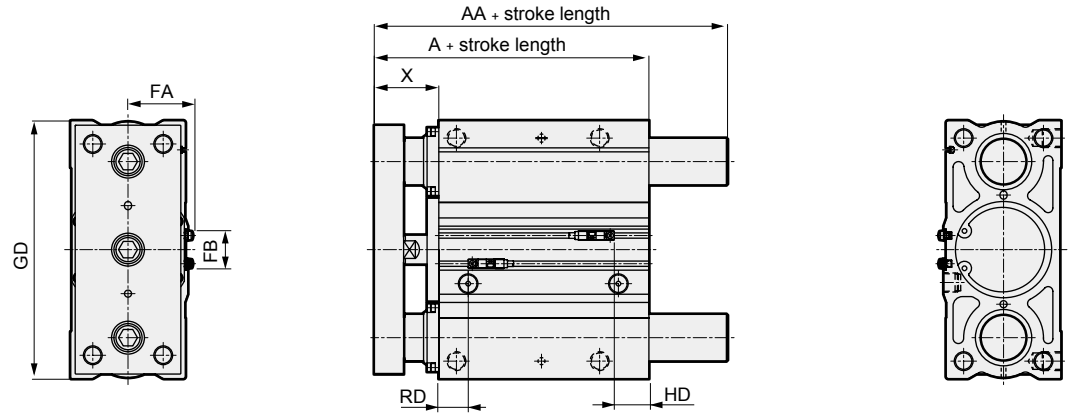

Code / Bore size (mm)	A	AA	GD	X	RD	HD	FA	FB
ø20	68	87	87	28 $^{0}_{-2}$	9.5	8	24.3	16
ø25	69	87	91	28 $^{0}_{-2}$	11.5	7.5	26.3	17
ø32	83	117	117	34 $^{0}_{-2}$	16	12	28.8	24
ø40	87	117	126	34 $^{0}_{-2}$	19.5	13	32.3	31
ø50	92	140	152	37 $^{0}_{-2}$	21.5	13.5	38.3	32
ø63	98	140	166	37 $^{0}_{-2}$	18.5	21.5	44.8	32
ø80	134	201	220	55 $^{0}_{-2}$	25	33	55.3	32

*1 : When using a custom stroke length, the dimensions are the same as the longer standard stroke length.

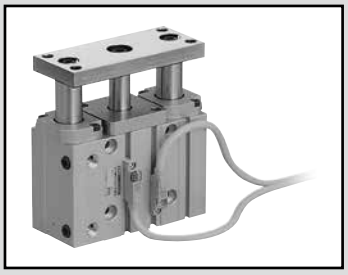

Guided cylinder Anti-spatter adherence

STS/STL-G4 Series

● Bore size: ø40/ø50/ø63/ø80

JIS symbol ● Double acting

RoHS CAD

Specifications

Item	STS/STL-G4			
Bore size mm	ø40	ø50	ø63	ø80
Actuation	Double acting			
Working fluid	Compressed air			
Max. working pressure MPa	1.0 (≈150 psi, 10 bar)			
Min. working pressure MPa	0.15 (≈22 psi, 1.5 bar)			
Proof pressure MPa	1.6 (≈230 psi, 16 bar)			
Ambient temperature °C	-10 (14°F) to 60 (140°F) (no freezing)			
Port size	Rc1/8	Rc1/4		Rc3/8
Stroke tolerance mm	+2.0 0			
Working piston speed mm/s	50 to 500		50 to 300	
Cushion	With rubber cushion			
Lubrication	Not required (use turbine oil class 1 ISO VG32 if necessary for lubrication)			
Allowable absorbed energy J	0.627	0.980	1.560	2.510

Stroke length

· Short stroke length STS

Bore size (mm)	Standard stroke length (mm)	Max. stroke length (mm)	Min. stroke length (mm)	Min. stroke with switch (mm)
ø40	25, 50	50	5	5 With one switch or two switches.
ø50				
ø63				
ø80	25, 50, 75, 100	100		

· Long stroke length STL

Bore size (mm)	Standard stroke length (mm)	Max. stroke length (mm)	Min. stroke length (mm)	Min. stroke with switch (mm)
ø40	50, 75, 100, 125, 150 175, 200, 225, 250, 275, 300, 325, 350, 375, 400	400	30	30 With one or two switches
ø50				
ø63				
ø80	75, 100, 125, 150, 175 200, 225, 250, 275, 300 325, 350, 375, 400		55	55 With one or two switches

*1: The custom stroke length is available in 5 mm increments.
However, the total length is the same as that of the next longer standard stroke length.

Switch specifications

Item	Proximity 2-wire T2YD/T2YDT
Applications	Dedicated for programmable controller
Indicator lamp	Red/green LED (Lit when ON)
Load voltage	24 VDC ±10%
Load current	DC5 to 20 mA
Internal voltage drop	6 V or less
Leakage current	1.0 mA or less
Weight g	1 m:61 3 m:166 5 m:272

*1 : Flame-resistant lead wires are available as options.
*2 : This switch cannot be used in DC magnetic field.
*3 : Refer to Ending Page 1 for detailed switch specifications and dimensions.
*4 : Switches with connectors are also available. Refer to Ending Page 28.

Theoretical thrust table

(Unit: N)

Bore size (mm)	Operating direction	Working pressure MPa									
		0.15	0.2	0.3	0.4	0.5	0.6	0.7	0.8	0.9	1.0
ø40	Push	1.88×10^2	2.51×10^2	3.77×10^2	5.03×10^2	6.28×10^2	7.54×10^2	8.80×10^2	1.01×10^3	1.13×10^3	1.26×10^3
	Pull	1.58×10^2	2.11×10^2	3.17×10^2	4.22×10^2	5.28×10^2	6.33×10^2	7.39×10^2	8.44×10^2	9.50×10^2	1.06×10^3
ø50	Push	2.95×10^2	3.93×10^2	5.89×10^2	7.85×10^2	9.82×10^2	1.18×10^3	1.37×10^3	1.57×10^3	1.77×10^3	1.96×10^3
	Pull	2.47×10^2	3.30×10^2	4.95×10^2	6.60×10^2	8.25×10^2	9.90×10^2	1.15×10^3	1.32×10^3	1.48×10^3	1.65×10^3
ø63	Push	4.68×10^2	6.23×10^2	9.35×10^2	1.25×10^3	1.56×10^3	1.87×10^3	2.18×10^3	2.49×10^3	2.81×10^3	3.12×10^3
	Pull	4.20×10^2	5.61×10^2	8.41×10^2	1.12×10^3	1.40×10^3	1.68×10^3	1.96×10^3	2.24×10^3	2.52×10^3	2.80×10^3
ø80	Push	7.54×10^2	1.01×10^3	1.51×10^3	2.01×10^3	2.51×10^3	3.02×10^3	3.52×10^3	4.02×10^3	4.52×10^3	5.03×10^3
	Pull	6.80×10^2	9.07×10^2	1.36×10^3	1.81×10^3	2.27×10^3	2.72×10^3	3.17×10^3	3.63×10^3	4.08×10^3	4.54×10^3

LCM
LCR
LCG
LCW
LCX
STM
STG
STS/STL
STR2
UCA2
ULK*
JSK/M2
JSG
JSC3/JSC4
USSD
UFCD
USC
UB
JSB3
LMB
LML
HCM
HCA
LBC
CAC4
UCAC2
CAC-N
UCAC-N
RCS2
RCC2
PCC
SHC
MCP
GLC
MFC
BBS
RRC
GRC
RV3*
NHS
HRL
LN
Hand
Chuk
MecHnd/Chuk
ShkAbs
FJ
FK
SpdContr
Ending

How to order

● Short stroke length

Without switch (built-in magnet for switch)

STS - M G4 - L1 - 40 ◯ - 50 ——— F

With switch (built-in magnet for switch)

STS - M G4 - L1 - 40 ◯ - 50 - T2YD - R - F

● Long stroke length

Without switch (built-in magnet for switch)

STL - M G4 - L1 - 40 ◯ - 100 ——— F

With switch (built-in magnet for switch)

STL - M G4 - L1 - 40 ◯ - 100 - T2YD - D - F

Series model No.

Ⓐ Bearing

Ⓑ Bore size

Ⓒ Port thread

Ⓓ Stroke length

Ⓔ Switch model No. *2

Ⓕ Switch quantity

Ⓖ Option

■ Custom stroke length

Available in 5 mm increments. However, the total length is the same as that of the next longer standard stroke length.

Code	Remarks
Ⓐ Bearing	
M	Metal bush bearing
B	Ball bearing

Ⓑ Bore size (mm)	
40	ø40
50	ø50
63	ø63
80	ø80

Ⓒ Port thread	
Blank	Rc thread
NN	NPT thread made-to-order product
GN	G thread made-to-order product

Ⓓ Stroke length (mm)
Refer to the stroke length table below.

Ⓔ Switch model No.

Axial lead wire	Radial lead wire	Contact	Voltage	Indicator	Lead wire
T2YD*	—	Proximity	DC	2-color display AC magnetic field	2-wire
T2YDT*	—				

*** Lead wire length**	
Blank	1 m (standard)
3	3 m (option)
5	5 m (option)

Ⓕ Switch quantity	
R	1 on rod side
H	1 on head side
D	2
T	3

Ⓖ Option	
F	End plate material: steel
M *3	Corrosion proof (Piston rod and guide rod material: SUS) (made-to-order product)
M1 *3	Corrosion proof (Piston rod, guide rod and end plate material: SUS) (made-to-order product)

⚠ Precautions for model No. selection

*1 : Refer to pages 444 to 447 for combinations of variations/options.
*2 : Switches are shipped with the product. Contact CKD if assembling before shipment is necessary.
*3 : Refer to page 458 for material details.

Ⓓ Stroke length

Series	Stroke length (mm)		Applicable bore size ø40	ø50	ø63	ø80
STS	Standard stroke length	25	●	●	●	●
		50	●	●	●	●
		75				●
		100				●
	Min. stroke length *1		5			
	Custom stroke *1, 2		In 5 mm increments			
STL	Standard stroke length	50	●	●	●	
		75	●	●	●	●
		100	●	●	●	●
		125	●	●	●	●
		150	●	●	●	●
		175	●	●	●	●
		200	●	●	●	●
		225	●	●	●	●
		250	●	●	●	●
		275	●	●	●	●
		300	●	●	●	●
		325	●	●	●	●
		350	●	●	●	●
		375	●	●	●	●
		400	●	●	●	●
	Min. stroke length *1		30			55
	Custom stroke *1, 2		In 5 mm increments			

*1: The total dimensions are the same as the longer standard stroke length.
*2: Special total length for custom stroke length can be provided when a custom stroke length is used. (Made to order)

How to order switch

SW - T2YD

Switch model No. (Item Ⓔ above)

* For cylinder weight, refer to pages 558 to 561.

LCM
LCR
LCG
LCW
LCX
STM
STG
STS/STL
STR2
UCA2
ULK*
JSK/M2
JSG
JSC3/JSC4
USSD
UFCD
USC
UB
JSB3
LMB
LML
HCM
HCA
LBC
CAC4
UCAC2
CAC-N
UCAC-N
RCS2
RCC2
PCC
SHC
MCP
GLC
MFC
BBS
RRC
GRC
RV3*
NHS
HRL
LN
Hand
Chuk
MecHnd/Chuk
ShkAbs
FJ
FK
SpdContr
Ending

Internal structure and parts list

● Double acting/standard single rod STS-$^{M}_{B}$G4 ø40/ø50/ø63

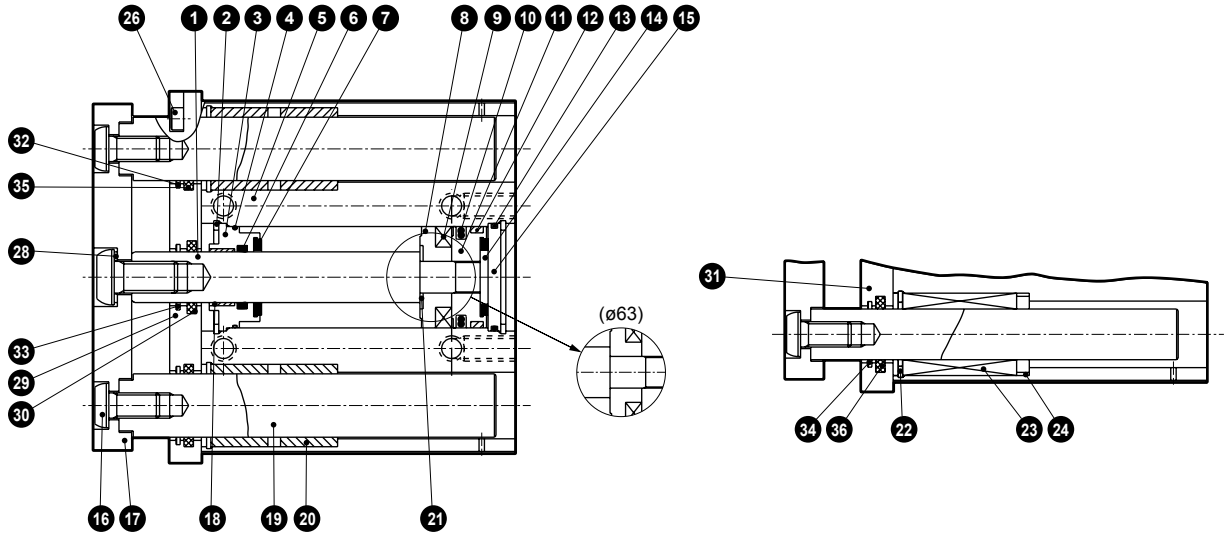

Metal bush bearing

Ball bearing

ø80

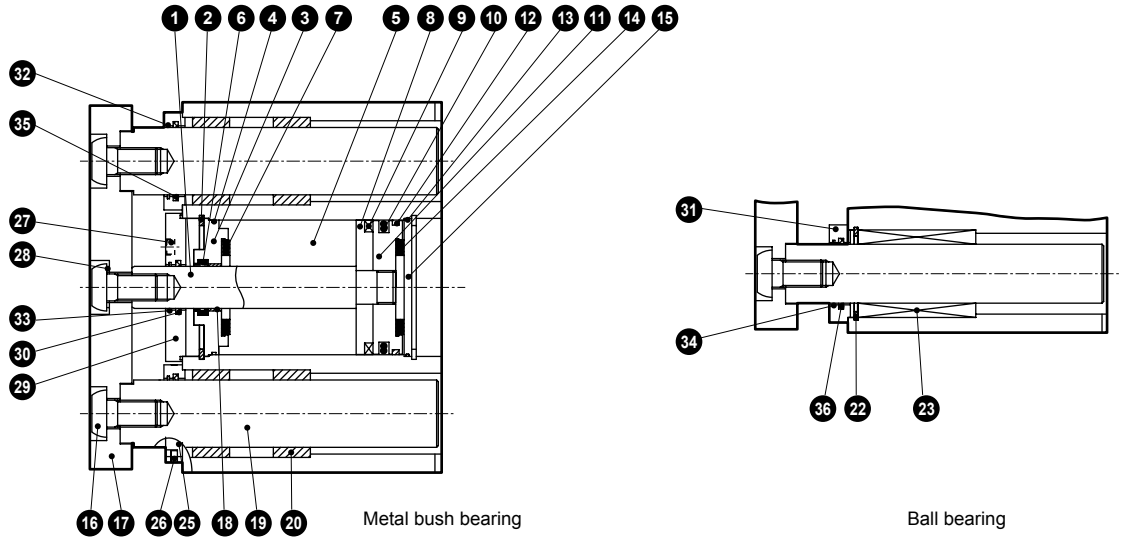

Metal bush bearing

Ball bearing

No.	Part name	Material	Remarks	No.	Part name	Material	Remarks
1	Piston rod	Steel	Industrial chrome plating	18	Bush	Oiles drymet	
2	C type snap ring	Steel	Zinc phosphate	19	Guide rod	Steel	Industrial chrome plating
3	Rod metal	Special aluminum alloy	Alumite	20	Metal	Oil impregnated bearing alloy	
4	Metal gasket	Nitrile rubber		21	Spacer washer	Stainless steel	
5	Cylinder body	Aluminum alloy	Hard alumite	22	C type snap ring	Steel	Zinc phosphate
6	Rod packing	Nitrile rubber		23	Ball bushing		
7	Cushion rubber (R)	Urethane rubber		24	Collar	Aluminum alloy	
8	Spacer	Polyamide (ø40/ø50)		25	Adaptor B	Aluminum alloy	Alumite
		Aluminum alloy (ø63/ø80)	Chromate (ø63/ø80)	26	Hexagon socket head cap screw	Steel	Zinc chromate
9	Magnet			27	Hexagon socket head cap screw	Steel	Zinc chromate
10	Piston packing	Nitrile rubber		28	Conical spring washer	Steel	
11	Piston	Aluminum alloy	Chromate	29	Adaptor A	Aluminum alloy	Alumite
12	Wear ring	Acetal resin		30	Lube keeping structure	Special rubber	
13	O-ring	Nitrile rubber		31	Adaptor C	Aluminum alloy	Alumite
14	Cushion rubber (H)	Urethane rubber		32	Coil scraper	Phosphor bronze	
15	Base plate	Aluminum alloy (ø40 to ø63)	Chromate (ø40 to ø63)	33	Coil scraper	Phosphor bronze	
		Steel (ø80)	Zinc chromate (ø80)	34	Coil scraper	Phosphor bronze	
16	Hexagon socket button head bolt	Steel	Zinc chromate	35	Lube keeping structure	Special rubber	
17	End plate	Aluminum alloy	Alumite	36	Lube keeping structure	Special rubber	

Internal structure and parts list

● Double acting/standard single rod STL-$^{M}_{B}$G4 ø40/ø50/ø63

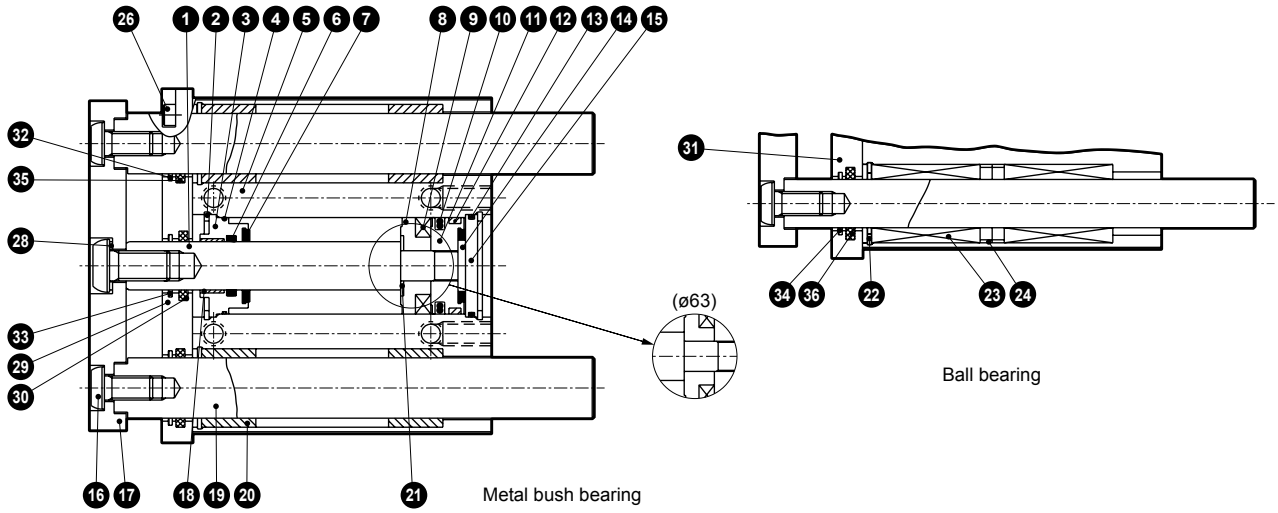

ø80

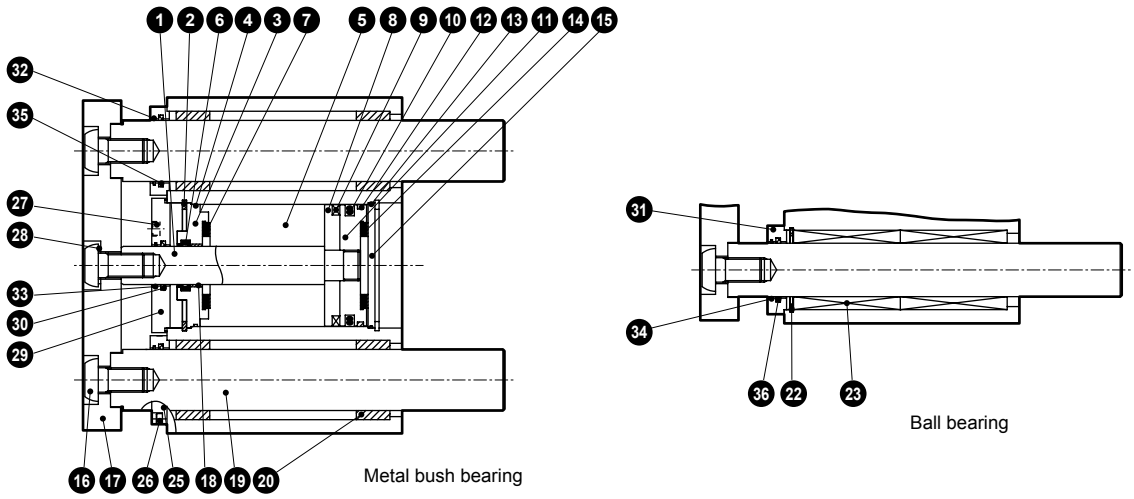

No.	Part name	Material	Remarks	No.	Part name	Material	Remarks
1	Piston rod	Steel	Industrial chrome plating	18	Bush	Oiles drymet	
2	C type snap ring	Steel	Zinc phosphate	19	Guide rod	Steel	Industrial chrome plating
3	Rod metal	Special aluminum alloy	Alumite	20	Metal	Oil impregnated bearing alloy	
4	Metal gasket	Nitrile rubber		21	Spacer washer	Stainless steel	
5	Cylinder body	Aluminum alloy	Hard alumite	22	C type snap ring	Steel	Zinc phosphate
6	Rod packing	Nitrile rubber		23	Ball bushing		
7	Cushion rubber (R)	Urethane rubber		24	Collar	Aluminum alloy	
8	Spacer	Polyamide (ø40/ø50)		25	Adaptor B	Aluminum alloy	Alumite
		Aluminum alloy (ø63/ø80)	Chromate (ø63/ø80)	26	Hexagon socket head cap screw	Steel	Zinc chromate
9	Magnet			27	Hexagon socket head cap screw	Steel	Zinc chromate
10	Piston packing	Nitrile rubber		28	Conical spring washer	Steel	
11	Piston	Aluminum alloy	Chromate	29	Adaptor A	Aluminum alloy	Alumite
12	Wear ring	Acetal resin		30	Lube keeping structure	Special rubber	
13	O-ring	Nitrile rubber		31	Adaptor C	Aluminum alloy	Alumite
14	Cushion rubber (H)	Urethane rubber		32	Coil scraper	Phosphor bronze	
15	Base plate	Aluminum alloy (ø40 to ø63)	Chromate (ø40 to ø63)	33	Coil scraper	Phosphor bronze	
		Steel (ø80)	Zinc chromate (ø80)	34	Coil scraper	Phosphor bronze	
16	Hexagon socket button head bolt	Steel	Zinc chromate	35	Lube keeping structure	Special rubber	
17	End plate	Aluminum alloy	Alumite	36	Lube keeping structure	Special rubber	

LCM
LCR
LCG
LCW
LCX
STM
STG
STS/STL
STR2
UCA2
ULK*
JSK/M2
JSG
JSC3/JSC4
USSD
UFCD
USC
UB
JSB3
LMB
LML
HCM
HCA
LBC
CAC4
UCAC2
CAC-N
UCAC-N
RCS2
RCC2
PCC
SHC
MCP
GLC
MFC
BBS
RRC
GRC
RV3*
NHS
HRL
LN
Hand
Chuk
MecHnd/Chuk
ShkAbs
FJ
FK
SpdContr
Ending

Dimensions: ø40/ø50/ø63

CAD

● Double acting/standard single rod STS-$^{M}_{B}$G4

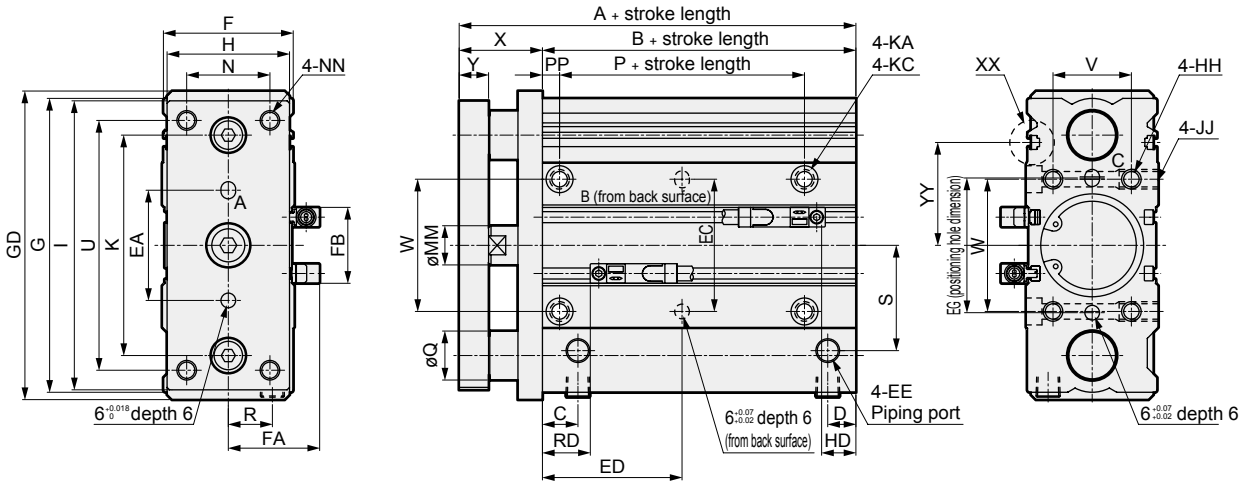

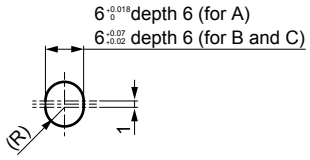

Slot dimensions for A, B and C

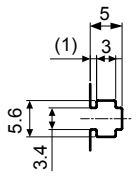

XX section details

STS-$^{M}_{B}$-G4 Code / Bore size (mm)	A	B	C	D	E	EE	EA	EC	EG	ED	F	G	GD	H	HH	I	JJ	K	KA
ø40	87	53	14.5	12	5.6	Rc1/8	45	54	55	19.5+ Stroke length/2	54	120	126	50	M8 depth 16	118	M8 depth 16	90	6.3 through
ø50	92	55	16	12.5	5.6	Rc1/4	55	66	69	19.5+ Stroke length/2	66	147	152	64	M10 depth 20	145	M10 depth 20	110	8.6 through
ø63	98	61	17.5	17.5	5.6	Rc1/4	62	79	82	22.5+ Stroke length/2	79	162	166	75	M10 depth 20	160	M10 depth 20	124	8.6 through

STS-$^{M}_{B}$-G4 Code / Bore size (mm)	KC	L	M	MM	N	NN	P	PP	Q	R	S	T	U	V	W	X	Y	YY	Z	RD	HD	FA	FB
ø40	11 spot face depth 6.5	1	3.4	16	34	M8 through	25	7	20	18	43	5	102	32	54	34 0 -2	12	42	3	19.5	12.5	32.3	31
ø50	14 spot face depth 8.6	1	3.4	20	44	M10 through	26	8	25	22	49	5	125	38	66	37 0 -2	16	45	3	21.5	13.5	38.3	32
ø63	14 spot face depth 8.6	1	3.4	20	55	M10 through	26	8	25	26	56	5	140	50	79	37 0 -2	16	52	3	18.5	21.5	44.8	32

*1: When using a custom stroke length, the dimensions are the same as the longer standard stroke length.

Dimensions: ø80

● Double acting/standard single rod STS-$^{M}_{B}$G4

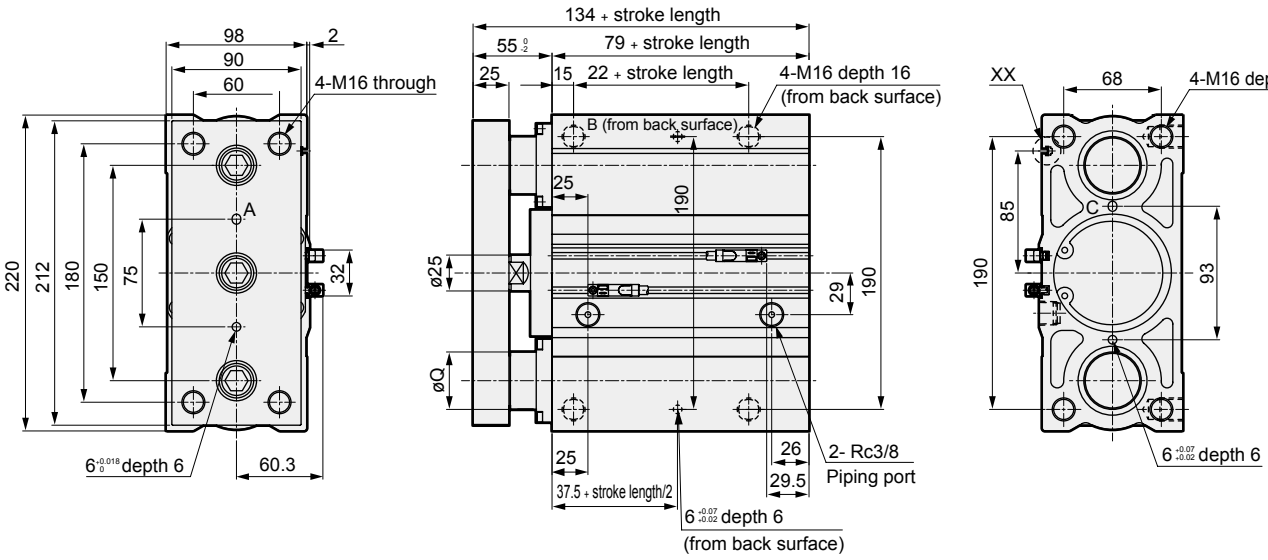

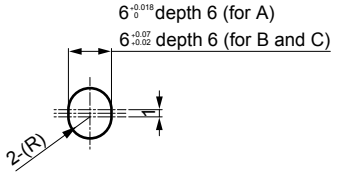

Slot dimensions for A, B and C

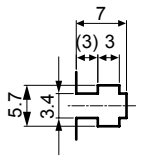

XX section details

Dimension Q is ø40 for M (metal bush bearing) and ø35 for B (ball bearing).

Note: When using a custom stroke length, the dimensions are the same as the longer standard stroke length. The standard stroke lengths of ø80 are 25, 50, 75 and 100 mm.

LCM
LCR
LCG
LCW
LCX
STM
STG
STS/STL
STR2
UCA2
ULK*
JSK/M2
JSG
JSC3/JSC4
USSD
UFCD
USC
UB
JSB3
LMB
LML
HCM
HCA
LBC
CAC4
UCAC2
CAC-N
UCAC-N
RCS2
RCC2
PCC
SHC
MCP
GLC
MFC
BBS
RRC
GRC
RV3*
NHS
HRL
LN
Hand
Chuk
MecHnd/Chuk
ShkAbs
FJ
FK
SpdContr
Ending

Dimensions: ø40/ø50/ø63

CAD

● Double acting/standard single rod STL-$^{M}_{B}$G4

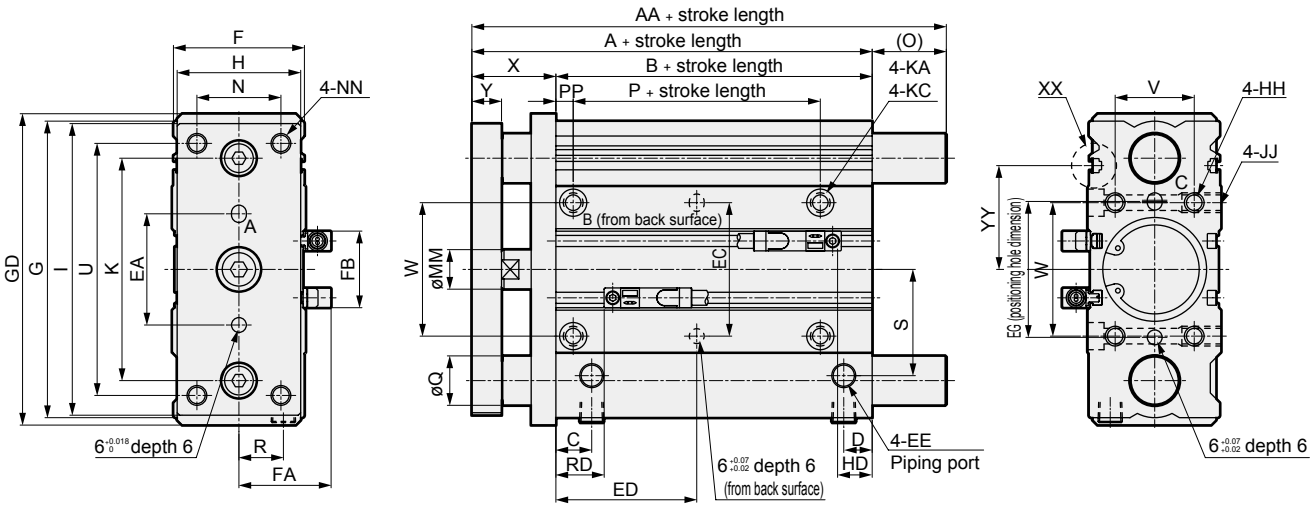

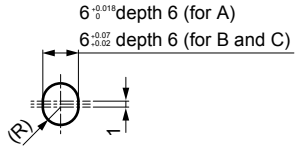

Slot dimensions for A, B and C

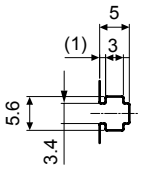

XX section details

STL-$^{M}_{B}$-G4 Code / Bore size (mm)	A	AA	B	C	D	E	EE	EA	EC	EG	ED	F	G	GD	H	HH	I	JJ	K	KA
ø40	87	117	53	14.5	12	5.6	Rc1/8	45	54	55	19.5+Stroke length/2	54	120	126	50	M8 depth 16	118	M8 depth 16	90	6.3 through
ø50	92	140	55	16	12.5	5.6	Rc1/4	55	66	69	19.5+Stroke length/2	66	147	152	64	M10 depth 20	145	M10 depth 20	110	8.6 through
ø63	98	140	61	17.5	17.5	5.6	Rc1/4	62	79	82	22.5+Stroke length/2	79	162	166	75	M10 depth 20	160	M10 depth 20	124	8.6 through

STL-$^{M}_{B}$-G4 Code / Bore size (mm)	KC	L	M	MM	N	NN	O	P	PP	Q	R	S	T	U	V	W	X	Y	YY	Z	RD	HD	FA	FB
ø40	11 spot face depth 6.5	1	3.4	16	34	M8 through	30	25	7	20	18	43	5	102	32	54	34 0 -2	12	42	3	19.5	12.5	32.3	31
ø50	14 spot face depth 8.6	1	3.4	20	44	M10 through	48	26	8	25	22	49	5	125	38	66	37 0 -2	16	45	3	21.5	13.5	38.3	32
ø63	14 spot face depth 8.6	1	3.4	20	55	M10 through	42	26	8	25	26	56	5	140	50	79	37 0 -2	16	52	3	18.5	21.5	44.8	32

*1: When using a custom stroke length, the dimensions are the same as the longer standard stroke length.

Dimensions: ø80

● Double acting/standard single rod STL-$^{M}_{B}$G4

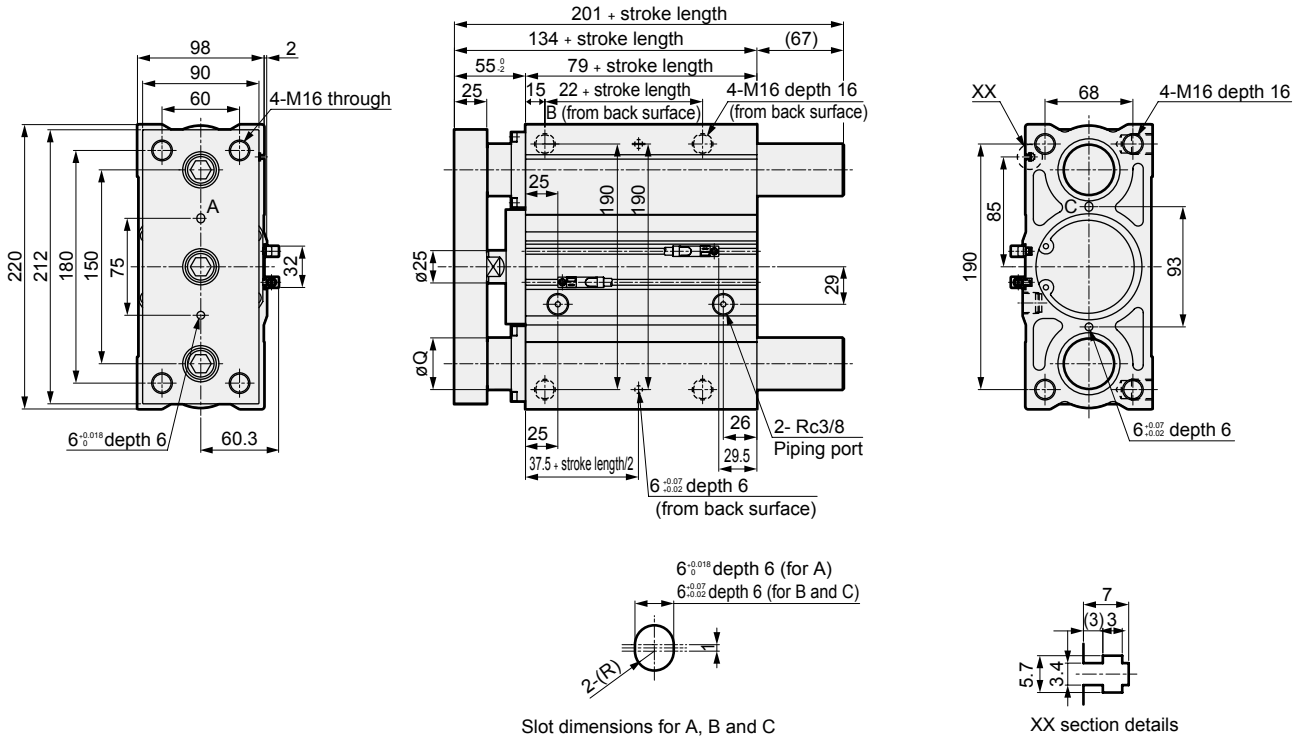

Slot dimensions for A, B and C

XX section details

Dimension Q is ø40 for M (metal bush bearing) and ø35 for B (ball bearing).

Note: When using a custom stroke length, the dimensions are the same as the longer standard stroke length. The standard stroke length of ø80 can be selected from 75 to 400 mm in 25 mm increments.

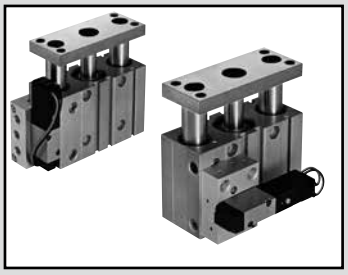

Guided cylinder/valve equipped

STS/STL-V$^{M}_{B}$ Series

● Bore size:ø20/ø25/ø32/ø40/ø50/ø63

JIS symbol 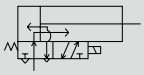

Specifications

Item		STS-MV, STS-BV (short stroke length)/STL-MV/STL-BV (long stroke length)					
Bore size	mm	ø20	ø25	ø32	ø40	ø50	ø63
Actuation		Double acting					
Working fluid		Compressed air					
Max. working pressure	MPa	0.7 (≈100 psi, 7 bar)					
Min. working pressure	MPa	0.15 (≈22 psi, 1.5 bar)					
Proof pressure	MPa	1.0 (≈150 psi, 10 bar)					
Ambient temperature	°C	-5 (23°F) to 50 (122°F) (no freezing)					
Port size		Rc1/8			Rc1/4		
Stroke tolerance	mm	+2.0 0					
Working piston speed	mm/s	50 to 500					50 to 300
Cushion		With rubber cushion					
Lubrication		Not required (use turbine oil class 1 ISO VG32 if necessary for lubrication)					
Incorporated valve		4KB1 Series			4KB2 Series		
Allowable absorbed energy	J	0.157	0.157	0.401	0.627	0.980	1.560

Note: Refer to “Pneumatic Valves (CB-023SA)” for details on valves.

Stroke length

Bore size (mm)	Standard stroke length (mm)		Max. stroke length (mm)	Min. stroke length (mm)
ø20/ø25/ø32	STS	25/50	100	5
ø40/ø50/ø63	STL	50/75/100		

Custom stroke length

Custom stroke lengths other than the standard are available in 5 mm increments.
However, the total length is the same as that of the next longer standard stroke length.
(Example) For STS-MV1-25-35, a spacer is mounted inside the STS-MV1-25-50 body to obtain a total length the same as that of the 50-stroke.

Switch specifications

● 1-color/2-color display/for AC magnetic field proof

Item	Proximity 2-wire	Proximity 2-wire			Proximity 3-wire				Reed 2-wire							Proximity 2-wire
	T1H/ T1V	T2H/T2V/ T2JH/T2JV	T2YH/ T2YV	T2WH/ T2WV	T3H/ T3V	T3PH/ T3PV	T3YH/ T3YV	T3WH/ T3WV	T0H/T0V		T5H/T5V		T8H/T8V			T2YD(*4) T2YDT
Applications	For programmable controller, relay, compact solenoid valve	Dedicated for programmable controller			For programmable controller, relay				For programmable controller, relay		For programmable controller, relay, IC circuit (no indicator lamp), serial connection		For programmable controller, relay			For programmable controller
Output method	-				NPN output	PNP output	NPN output	NPN output	-							
Pwr. supp. V.	-				10 to 28 VDC				-							
Load voltage	85 to 265 VAC	10 to 30 VDC		24 VDC ±10%	30 VDC or less				12/24 VDC	100/110 VAC	5/12/24 VDC	100/110 VAC	12/24 VDC	110 VAC	220 VAC	24 VDC ±10%
Load current	5 to 100 mA	5 to 20 mA (*3)			100 mA or less		50 mA or less		5 to 50 mA	7 to 20 mA	≤50 mA	≤20 mA	5 to 50 mA	7 to 20 mA	7 to 10 mA	5 to 20 mA
Indicator lamp	LED (Lit when ON)	LED (Lit when ON)	Red/green LED (Lit when ON)	Red/green LED (Lit when ON)	LED (Lit when ON)	Yellow LED (Lit when ON)	Red/green LED (Lit when ON)	Red/green LED (Lit when ON)	LED (Lit when ON)		Without indicator lamp		LED (Lit when ON)			Red/green LED (Lit when ON)
Leakage current	≤ 1 mA at 100 VAC, ≤ 2 mA at 200 VAC	1 mA or less			10 μA or less				0 mA							1 mA or less
Weight g	1 m:33 3 m:87 5 m:142	1 m:18 3 m:49 5 m:80	1 m:33 3 m:87 5 m:142	1 m:18 3 m:49 5 m:80	1 m:18 3 m:49 5 m:80		1 m:33 3 m:87 5 m:142	1 m:18 3 m:49 5 m:80	1 m:18 3 m:49 5 m:80				1 m:33 3 m:87 5 m:142			1 m:61 3 m:166 5 m:272

*1 : Refer to Ending Page 1 for detailed switch specifications and dimensions.
*2 : Switches other than the above models, such as switches with connectors, are also available. Refer to Ending Page 1.
*3 : The max. load current is 20 mA at 25°C. The current is lower than 20 mA if the operating ambient temperature around the switch is higher than 25°C. (5 to 10 mA at 60°C)
*4 : AC magnetic field proof switch (T2YD/T2YDT) cannot be used in DC magnetic fields.

Valve specifications

Item	ST $^{S}/_{L}$ - $^{M}/_{B}$ V1 20 V2 -25 32			ST $^{S}/_{L}$ - $^{M}/_{B}$ V1 40 V2 -50 63		
Applicable valve series	4KB1 Series			4KB2 Series		
Position Number of solenoids	2-position single			2-position single		
Valve effective cross-sectional area (mm^2) (Cv)	4 (0.22)			14 (0.76)		
Rated voltage (V)	100 AC(50/60 Hz)	200 AC(50/60 Hz)	24 DC	100 AC(50/60 Hz)	200 AC(50/60 Hz)	24 DC
Starting current (A)	0.056/0.044	0.034/0.026	0.075	0.056/0.044	0.028/0.022	0.075
Holding current (A)	0.028/0.022	0.017/0.013		0.028/0.022	0.014/0.011	
Power consumption (W)	1.8/1.4	2.1/1.6	1.8	1.8/1.4		1.8
Voltage fluctuation range	±10%			±10%		
Thermal class	Class B molded coil			Class B molded coil		

Note: Refer to “Pneumatic Valves (CB-023SA)” for details on valves.

Theoretical thrust table

(Unit: N)

Bore size (mm)	Operating direction	Working pressure MPa						
		0.15	0.2	0.3	0.4	0.5	0.6	0.7
ø20	Push	47.1	62.8	94.2	1.26×10^2	1.57×10^2	1.88×10^2	2.20×10^2
	Pull	35.3	47.1	70.7	94.2	1.18×10^2	1.41×10^2	1.65×10^2
ø25	Push	73.6	98.2	1.47×10^2	1.96×10^2	2.45×10^2	2.95×10^2	3.44×10^2
	Pull	56.7	75.6	1.13×10^2	1.51×10^2	1.89×10^2	2.27×10^2	2.64×10^2
ø32	Push	1.21×10^2	1.61×10^2	2.41×10^2	3.22×10^2	4.02×10^2	4.83×10^2	5.63×10^2
	Pull	90.5	1.21×10^2	1.81×10^2	2.41×10^2	3.02×10^2	3.62×10^2	4.22×10^2
ø40	Push	1.88×10^2	2.51×10^2	3.77×10^2	5.03×10^2	6.28×10^2	7.54×10^2	8.80×10^2
	Pull	1.58×10^2	2.11×10^2	3.17×10^2	4.22×10^2	5.28×10^2	6.33×10^2	7.39×10^2
ø50	Push	2.95×10^2	3.93×10^2	5.89×10^2	7.85×10^2	9.82×10^2	1.18×10^3	1.37×10^3
	Pull	2.47×10^2	3.30×10^2	4.95×10^2	6.60×10^2	8.25×10^2	9.90×10^2	1.15×10^3
ø63	Push	4.68×10^2	6.23×10^2	9.35×10^2	1.25×10^3	1.56×10^3	1.87×10^3	2.18×10^3
	Pull	4.20×10^2	5.61×10^2	8.41×10^2	1.12×10^3	1.40×10^3	1.68×10^3	1.96×10^3

For cylinder weight, refer to pages 558 to 561.

How to order

● Short stroke length

Without switch (built-in magnet for switch)

STS - M V1 S - 20 ◯ - 25 - B - 1 ———— F

With switch (built-in magnet for switch)

STS - M V1 S - 20 ◯ - 25 - B - 1 - T0H - R - F

● Long stroke length

Without switch (built-in magnet for switch)

STL - M V1 S - 50 ◯ - 50 - B - 1 ———— F

With switch (built-in magnet for switch)

STL - M V1 S - 50 ◯ - 50 - B - 1 - T0H - R - F

Ⓐ Bearing
Ⓑ Operating direction
Ⓒ Valve mounting direction *1/*2
Ⓓ Bore size
Ⓔ Port thread
Ⓕ Stroke length
Ⓖ Electrical connections
Ⓗ Rated voltage
Ⓘ Switch model No. *4
Ⓙ Switch quantity
Ⓚ Option

■ The custom stroke length is available in 5 mm increments.
However, the total length is the same as that of the next longer standard stroke length.

⚠ Precautions for model No. selection

*1 : When selecting types with valve on side with a stroke length of 25 mm or less, the valve mounting dimensions (VC) may exceed the overall length of the cylinder (A + stroke).
Ch0eck the measurements using the external dimensions chart.
*2 : The 2-color display and strong magnetic field proof switch cannot be mounted on the valve on front type.
*3 : Refer to pages 444 and 447 for combinations of variations/options.
*4 : Switches are shipped with the product. Contact CKD if assembling before shipment is necessary.

[Example of model No.]

STS-MV1S-20-25-B-1-T0H-R-F

Model: Guided cylinder, short stroke length, valve equipped

Ⓐ Bearing : Metal bush bearing
Ⓑ Operating direction: Pushed out when energized
Ⓒ Valve mounting direction: With valve on side
Ⓓ Bore size : ø20 mm
Ⓔ Port thread : Rc thread
Ⓕ Stroke length : 25 mm
Ⓖ Electrical connections: Compact terminal box, without lead wire
Ⓗ Rated voltage : 100 VAC
Ⓘ Switch model No.: Reed T0H, lead wire 1 m
Ⓙ Switch quantity : 1 on rod side
Ⓚ Option : End plate material (steel)

For the 2-color display, T1H/V, T8H/V and AC magnetic field proof switches for ø40 and over, insert "L1" with "-" between Ⓒ and Ⓓ.
Example) STS-MV1S-**L1**-50-50-B-1-T2YH3-D-F

How to order switch

SW - T0H

↓

Switch model No. (Item Ⓘ above)

Code	Description
Ⓐ Bearing	
M	Metal bush bearing
B	Ball bearing
Ⓑ Operating direction	
V1	Pushed out when energized
V2	Pull when energized
Ⓒ Valve mounting direction	
Blank	With valve on front
S	With valve on side
Ⓓ Bore size (mm)	
20	ø20
25	ø25
32	ø32
40	ø40
50	ø50
63	ø63
Ⓔ Port thread	
Blank	Rc thread
NN	NPT thread (ø32 and over) made-to-order product
GN	G thread (ø32 and over) made-to-order product
Ⓕ Stroke length	
Refer to the stroke length table on following page.	
Ⓖ Electrical connections	
Blank	Grommet lead wire (300 mm)
B	Compact terminal box, without lead wire
C	C type connector, lead wire (300 mm)
D	D type connector, lead wire (300 mm)
Ⓗ Rated voltage	
1	100 VAC
2	200 VAC
3	24 VDC

Ⓘ Switch model No.

Axial lead wire	Radial lead wire	Contact	Voltage AC	Voltage DC	Display	Lead wire
T0H*	T0V*	Reed	●	●	1-color display	2-wire
T5H*	T5V*	Reed	●	●	Without indicator lamp	2-wire
T8H*	T8V*	Reed	●	●	1-color display	2-wire
T1H*	T1V*	Proximity	●		1-color display	2-wire
T2H*	T2V*	Proximity		●	1-color display	2-wire
T3H*	T3V*	Proximity		●	1-color display	3-wire
T3PH*	T3PV*	Proximity		●	1-color display	3-wire
T2WH*	T2WV*	Proximity		●	2-color display	2-wire
T2YH*	T2YV*	Proximity		●	2-color display	2-wire
T3WH*	T3WV*	Proximity		●	2-color display	3-wire
T3YH*	T3YV*	Proximity		●	2-color display	3-wire
T2JH*	T2JV*	Proximity		●	1-color display off-delay	2-wire
T2YD*	-	Proximity		●	2-color display for AC magnetic field	2-wire
T2YDT*	-	Proximity		●	2-color display for AC magnetic field	2-wire

* Lead wire length (m)	
Blank	1 m (standard)
3	3 m (option)
5	5 m (option)

Ⓙ Switch quantity	
R	1 on rod side
H	1 on head side
D	2

Ⓚ Option	
F	End plate material (steel)

LCM
LCR
LCG
LCW
LCX
STM
STG
STS/STL
STR2
UCA2
ULK*
JSK/M2
JSG
JSC3/JSC4
USSD
UFCD
USC
UB
JSB3
LMB
LML
HCM
HCA
LBC
CAC4
UCAC2
CAC-N
UCAC-N
RCS2
RCC2
PCC
SHC
MCP
GLC
MFC
BBS
RRC
GRC
RV3*
NHS
HRL
LN
Hand
Chuk
MecHnd/Chuk
ShkAbs
FJ
FK
SpdContr
Ending

Ⓕ Stroke length

Series	Stroke length (mm)		Applicable bore size					
			ø20	ø25	ø32	ø40	ø50	ø63
STS	Standard stroke length	25	●	●	●	●	●	●
		50	●	●	●	●	●	●
	Min. stroke length *1		5					
	Custom stroke *1, 2		In 5 mm increments					
STL	Standard stroke length	50	●	●	●	●	●	●
		75	●	●	●	●	●	●
		100	●	●	●	●	●	●
	Min. stroke length*1		30					
	Custom stroke*1, 2		In 5 mm increments					

*1: The total dimensions are the same as the longer standard stroke length.
*2: Special total length for custom stroke length can be provided when a custom stroke length is used. (Made to order)

Series variation

Bore size (mm)	Standard stroke length (mm)					Applicable valve series	Position Number of solenoids	Valve effective cross-sectional area (mm²) (Cv)
	STS		STL					
	25	50	50	75	100			
ø20	●	●	●	●	●	4KB1 Series	2-position single	4(0.22)
ø25	●	●	●	●	●			
ø32	●	●	●	●	●			
ø40	●	●	●	●	●	4KB2 Series	2-position single	14(0.76)
ø50	●	●	●	●	●			
ø63	●	●	●	●	●			

LCM
LCR
LCG
LCW
LCX
STM
STG
STS/STL
STR2
UCA2
ULK*
JSK/M2
JSG
JSC3/JSC4
USSD
UFCD
USC
UB
JSB3
LMB
LML
HCM
HCA
LBC
CAC4
UCAC2
CAC-N
UCAC-N
RCS2
RCC2
PCC
SHC
MCP
GLC
MFC
BBS
RRC
GRC
RV3*
NHS
HRL
LN
Hand
Chuk
MecHnd/Chuk
ShkAbs
FJ
FK
SpdContr
Ending

Internal structure and parts list

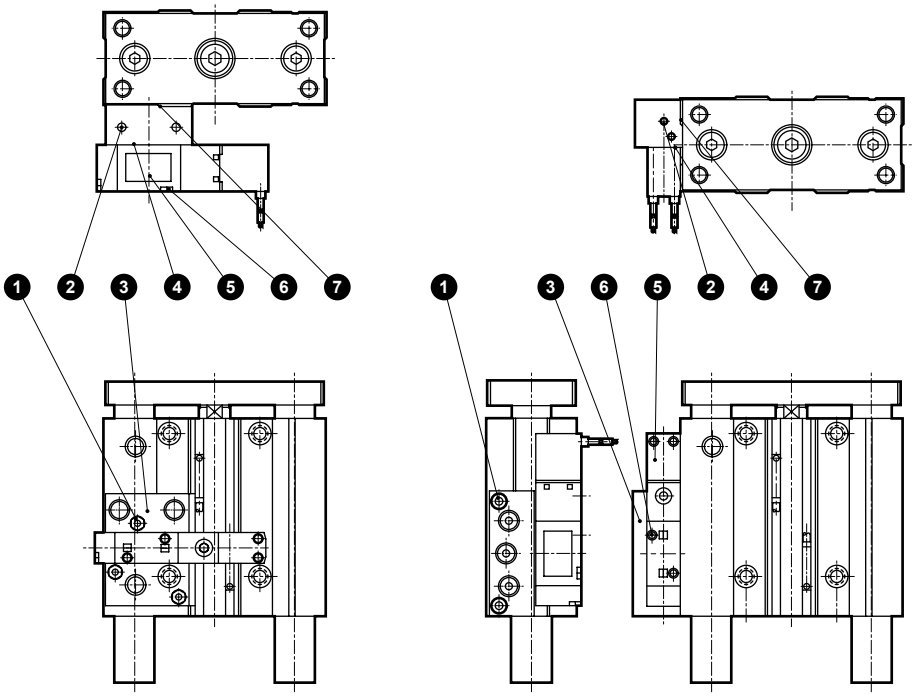

With valve on front

With valve on side

No.	Part name	Material	Remarks
1	Hex socket screw	Stainless steel	
2	Hexagon socket set screw	Steel	Black finish
3	Sub-base	Aluminum alloy	Alumite
4	Gasket	Nitrile rubber	
5	Pneumatic valve		
6	Set screw	Steel	Zinc chromate
7	O-ring	Nitrile rubber	

Repair parts list

The repair parts list is common with the double acting/single rod.
Refer to page 453 for STS Series and page 456 for STL Series.

Sub-base kit

Bore size (mm)		Kit No.	Part No.	Bore size (mm)		Kit No.	Part No.
STS-M/B-V1 (With valve on front Pushed out when energized)	ø20	STS-V1-20	1 2 3 7	STS-M/B-V1S (With valve on side Pushed out when energized)	ø20	STS-V1S-20	1 2 3 7
	ø25				ø25		
	ø32	STS-V1-32			ø32	STS-V1S-32	
	ø40	STS-V1-40			ø40	STS-V1S-40	
	ø50	STS-V1-50			ø50	STS-V1S-50	
	ø63				ø63		
Bore size (mm)		**Kit No.**	**Part No.**	**Bore size (mm)**		**Kit No.**	**Part No.**
STS-M/B-V2 (With valve on front Retracted in when energized)	ø20	STS-V2-20	1 2 3 7	STS-M/B-V2S (With valve on front Retracted in when energized)	ø20	STS-V2S-20	1 2 3 7
	ø25				ø25		
	ø32	STS-V2-32			ø32	STS-V2S-32	
	ø40	STS-V2-40			ø40	STS-V2S-40	
	ø50	STS-V2-50			ø50	STS-V2S-50	
	ø63				ø63		

MEMO

Dimensions

● With valve on front

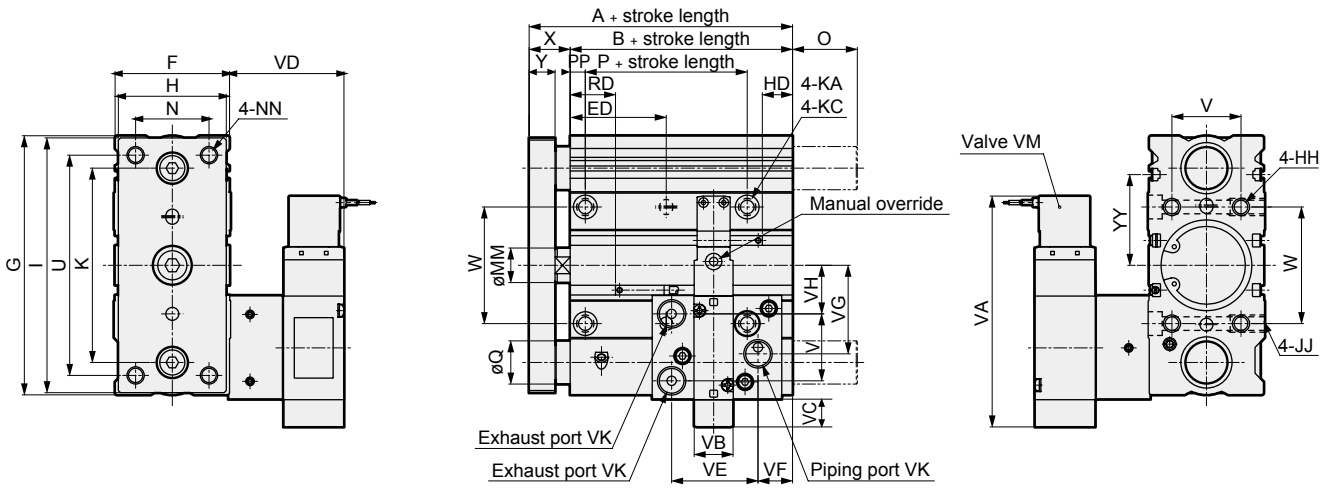

Code / Bore size (mm)	A	B	ED	F	G	H	HH	I	JJ	K	KA	KC	MM	N	NN	O STS	O STL	P
ø20	53	40	14 + Stroke length/2	38	83	36	M6 depth 12	81	M6 depth 12	59	5.2 through	9.5 spot face depth 5.4	10	24	M6 through	0	18	20
ø25	54	41	14.5+ Stroke length/2	42	86	38	M6 depth 12	84	M6 depth 12	63	5.2 through	9.5 spot face depth 5.4	12	26	M6 through	0	17	20
ø32	68	49	17.5+ Stroke length/2	47	111	45	M8 depth 16	109	M8 depth 16	81	6.3 through	11 spot face depth 6.5	16	29	M8 through	0	34	22
ø40	72	53	19.5+ Stroke length/2	54	120	50	M8 depth 16	118	M8 depth 16	90	6.3 through	11 spot face depth 6.5	16	34	M8 through	0	30	25
ø50	77	55	19.5+ Stroke length/2	66	147	64	M10 depth 20	145	M10 depth 20	110	8.6 through	14 spot face depth 8.6	20	44	M10 through	0	48	26
ø63	83	61	22.5+ Stroke length/2	79	162	75	M10 depth 20	160	M10 depth 20	124	8.6 through	14 spot face depth 8.6	20	55	M10 through	0	42	26

Code / Bore size (mm)	PP	Q M type	Q B type	U	V	W	X	Y	YY	VA	VB	VC	VD	VE	VF	VG	VH	VI	VK	VM	T0/T5/T2/T3 RD	T0/T5/T2/T3 HD	T2W/T3W RD	T2W/T3W HD
ø20	6	14	12	69	20	31	13 $^{0}_{-2}$	9	25	86	15	8.5	42.5	35.5	9.5	29.5	13	22	Rc1/8	4KB1 Series	12	9	12.5	12.5
ø25	6	14	12	72	24	35	13 $^{0}_{-2}$	9	27	86	15	8	42.5	35.5	10.5	30.5	14	22	Rc1/8	4KB1 Series	13	9	14.5	11
ø32	7	20	16	93	25	45	19 $^{0}_{-2}$	12	39	86	15	4	42.5	37.5	15.5	39	20.5	26	Rc1/8	4KB1 Series	17.5	13.5	19	15
ø40	7	20	16	102	32	54	19 $^{0}_{-2}$	12	42	107	18	15	52.5	40	16	41	22.5	31	Rc1/4	4KB2 Series	21	14	22.5	16
ø50	8	25	20	125	38	66	22 $^{0}_{-2}$	16	45	107	18	9	52.5	41	17	49	43	21	Rc1/4	4KB2 Series	22	16	23.5	16.5
ø63	8	25	20	140	50	79	22 $^{0}_{-2}$	16	52	107	18	8	52.5	41	23	55.5	49.5	21	Rc1/4	4KB2 Series	20	23	21.5	24.5

*1: When using a custom stroke length, the dimensions are the same as the longer standard stroke length.
*2: Refer to pages 552 and 553 for RD, HD and protruding dimensions of the 2-color display (except for T2WH/V and T3WH/V), off-delay, AC magnetic field proof, T1H/V and T8H/V switches.

Dimensions

CAD

● With valve on side

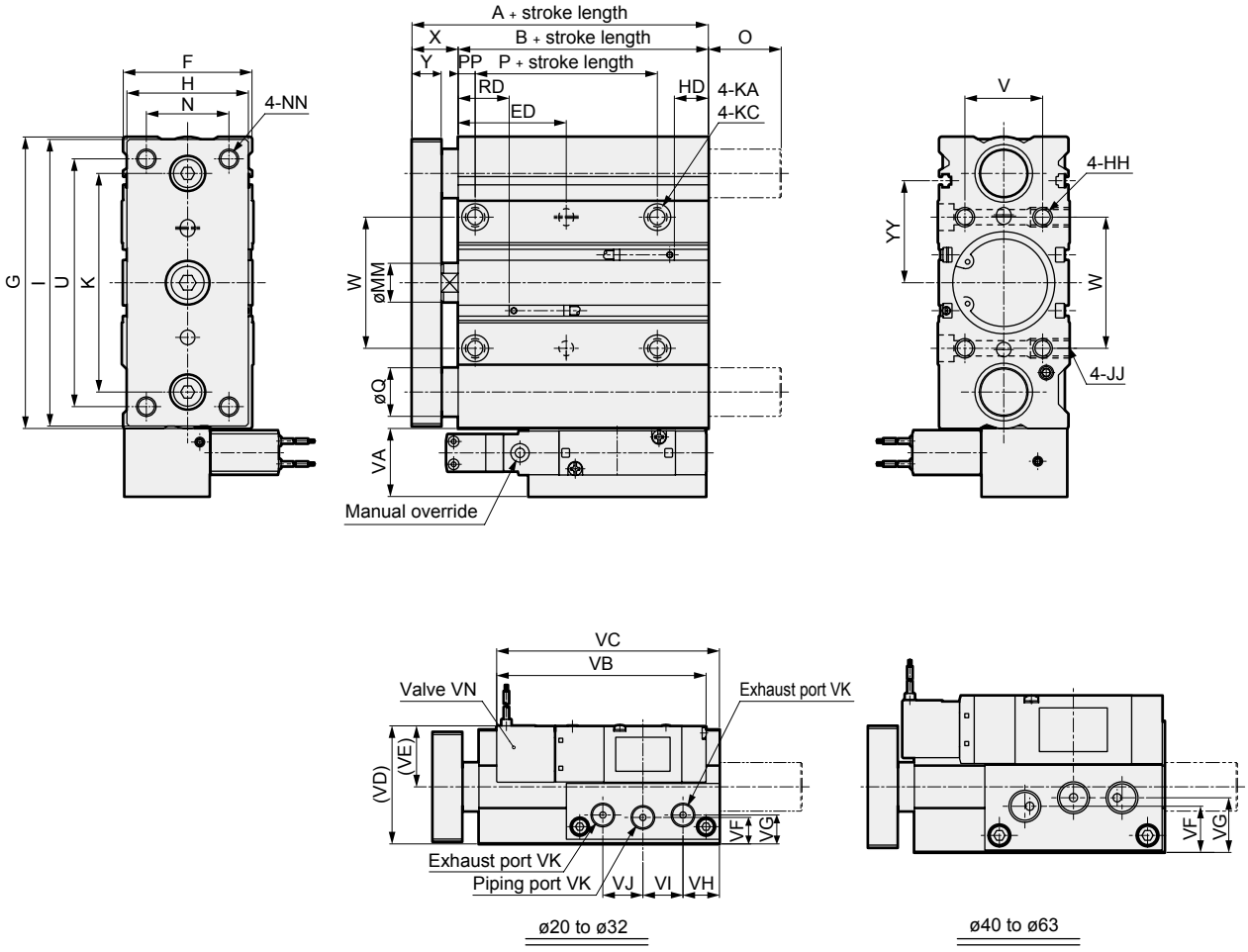

Code / Bore size (mm)	A	B	ED	F	G	H	HH	I	JJ	K	KA	KC	MM	N	NN	O STS	O STL	P
ø20	53	40	14 + Stroke length/2	38	83	36	M6 depth 12	81	M6 depth 12	59	5.2 through	9.5 spot face depth 5.4	10	24	M6 through	0	18	20
ø25	54	41	14.5+ Stroke length/2	42	86	38	M6 depth 12	84	M6 depth 12	63	5.2 through	9.5 spot face depth 5.4	12	26	M6 through	0	17	20
ø32	68	49	17.5+ Stroke length/2	47	111	45	M8 depth 16	109	M8 depth 16	81	6.3 through	11 spot face depth 6.5	16	29	M8 through	0	34	22
ø40	72	53	19.5+ Stroke length/2	54	120	50	M8 depth 16	118	M8 depth 16	90	6.3 through	11 spot face depth 6.5	16	34	M8 through	0	30	25
ø50	77	55	19.5+ Stroke length/2	66	147	64	M10 depth 20	145	M10 depth 20	110	8.6 through	14 spot face depth 8.6	20	44	M10 through	0	48	26
ø63	83	61	22.5+ Stroke length/2	79	162	75	M10 depth 20	160	M10 depth 20	124	8.6 through	14 spot face depth 8.6	20	55	M10 through	0	42	26

Code / Bore size (mm)	PP	Q M type	Q B type	U	V	W	X	Y	YY	VA	VB	VC	VD	VE	VF	VG	VH	VI	VJ	VK	VN	T0/T5/T2/T3 RD	T0/T5/T2/T3 HD	T2W/T3W RD	T2W/T3W HD
ø20	6	14	12	69	20	31	13 $^{0}_{-2}$	9	25	23	86	92	47.5	28.5	10	11	15	16.5	16.5	Rc1/8	4KB1 Series	12	9	12.5	12.5
ø25	6	14	12	72	24	35	13 $^{0}_{-2}$	9	27	23	86	92	49.5	28.5	12	13	15	16.5	16.5	Rc1/8	4KB1 Series	13	9	14.5	11
ø32	7	20	16	93	25	45	19 $^{0}_{-2}$	12	39	23	86	92	48.5	25	11	12	15	16.5	16.5	Rc1/8	4KB1 Series	17.5	13.5	19	15
ø40	7	20	16	102	32	54	19 $^{0}_{-2}$	12	42	28	107	108	64.5	37.5	19	22.5	17.5	20	20	Rc1/4	4KB2 Series	21	14	22.5	16
ø50	8	25	20	125	38	66	22 $^{0}_{-2}$	16	45	28	107	108	66.5	33.5	21	24.5	17.5	20	20	Rc1/4	4KB2 Series	22	16	23.5	16.5
ø63	8	25	20	140	50	79	22 $^{0}_{-2}$	16	52	28	107	108	68	28.5	22.5	26	17	20	20	Rc1/4	4KB2 Series	20	23	21.5	24.5

*1: When using a custom stroke length, the dimensions are the same as the longer standard stroke length.
*2: Refer to pages 552 and 553 for RD, HD and protruding dimensions of the 2-color display (except for T2WH/V and T3WH/V), off-delay, AC magnetic field proof, T1H/V and T8H/V switches.

LCM
LCR
LCG
LCW
LCX
STM
STG
STS/STL
STR2
UCA2
ULK*
JSK/M2
JSG
JSC3/JSC4
USSD
UFCD
USC
UB
JSB3
LMB
LML
HCM
HCA
LBC
CAC4
UCAC2
CAC-N
UCAC-N
RCS2
RCC2
PCC
SHC
MCP
GLC
MFC
BBS
RRC
GRC
RV3*
NHS
HRL
LN
Hand
Chuk
MecHnd/Chuk
ShkAbs
FJ
FK
SpdContr
Ending

STS/STL Series common/dimensions: 2-color display, off-delay, T8H/V switch mounting method

● Bore size: ø8 to ø16

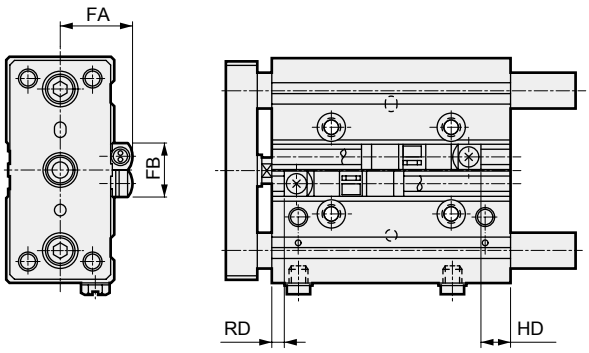

● Bore size: ø20 to ø63

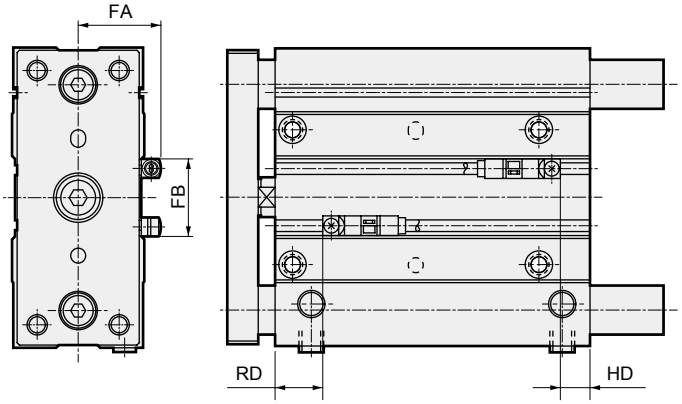

● Bore size: ø80

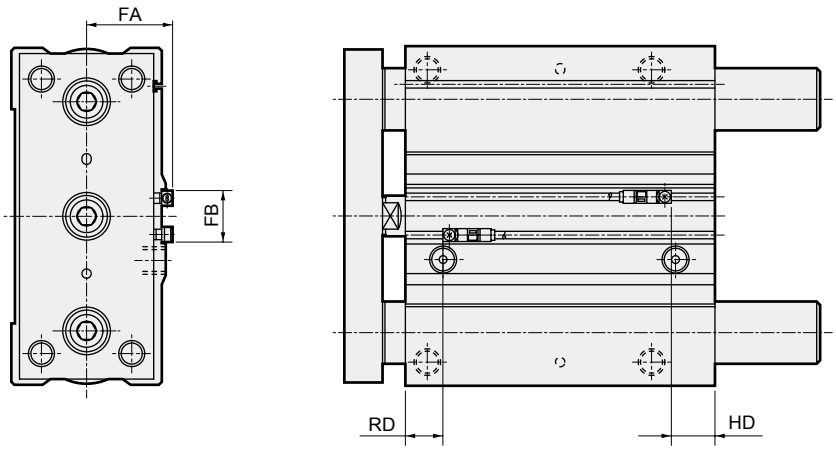

STS/STL (standard)

Code / Bore size (mm)	FA	FB	T*YH/V, T2JH/V		T8H/V	
			RD	HD	RD	HD
ø8	17.6	16	5.5	1.5	-	
ø12	18.8	16	4	7.5	-	
ø16	20.8	16	3.5	8.5	-	
ø20	24.3	16	9.5	8	5	3.5
ø25	26.3	17	11.5	7.5	7	3
ø32	28.8	24	16	12	11.5	7.5
ø40	32.3	31	19.5	12.5	15	8
ø50	38.3	32	21.5	13.5	16	10
ø63	44.8	32	18.5	21.5	14	17
ø80	55.3	32	25	33	20.5	24.5
ø100	65	32	24	34	19	29

STS/STL-Q-R (rod side position locking)

Code / Bore size (mm)	FA	FB	RD	HD
ø20	24.3	16	34.5	8
ø25	26.3	17	36.5	7.5
ø32	28.8	24	41	12
ø40	32.3	31	69.5	13
ø50	38.3	32	71.5	13.5
ø63	44.8	32	68.5	21.5
ø80	55.3	32	100	33

*1: T8H/V switch cannot be installed.

STS/STL-Q-H (head side position locking)

Code / Bore size (mm)	FA	FB	RD	HD
ø20	24.3	16	9.5	33
ø25	26.3	17	11.5	32.5
ø32	28.8	24	16	37
ø40	32.3	31	19.5	63
ø50	38.3	32	21.5	63.5
ø63	44.8	32	18.5	71.5
ø80	55.3	32	25	108

*1: T8H/V switch cannot be installed.

STS/STL-C (air-cushioned)

Code / Bore size (mm)	FA	FB	T*YH/V, T2JH/V		T8H/V	
			RD	HD	RD	HD
ø25	26.3	17	26.5	17.5	20.5	11.5
ø32	28.8	24	33	20	27	14
ø40	32.3	31	36.5	21	30.5	15
ø50	38.3	32	37	22	31	16
ø63	44.8	32	42.5	24.5	36.5	18.5
ø80	55.3	32	59	49	53	43

STS/STL Series common dimensions: AC magnetic field, T1H/V switch installation dimensions

● Bore size: ø8 to ø16

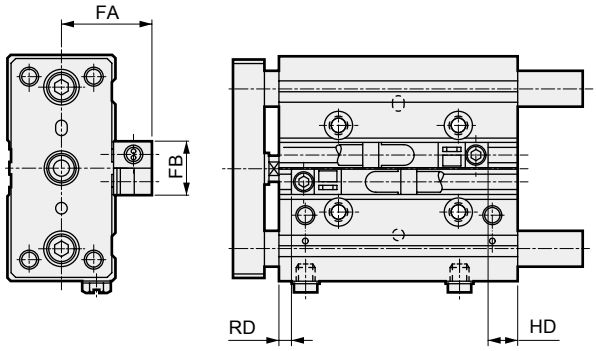

● Bore size: ø20 to ø63

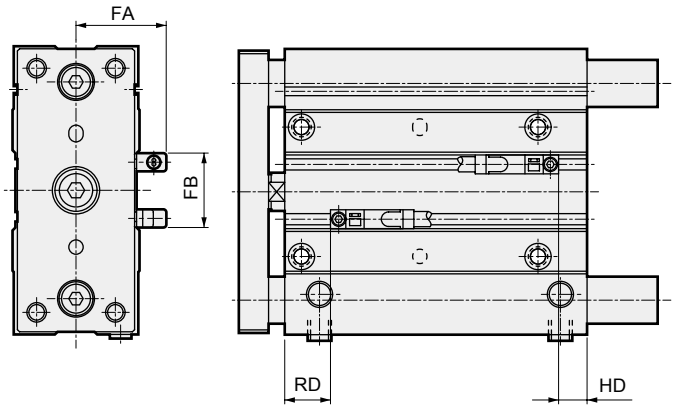

● Bore size: ø80

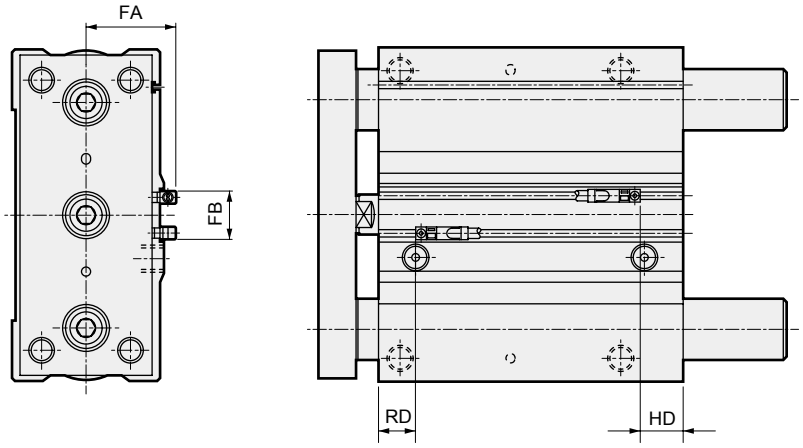

STS/STL (standard)

Code / Bore size (mm)	FA	FB	RD	HD
ø8	22.6	16	5.5	1.5
ø12	23.8	16	4	7.5
ø16	25.8	16	3.5	8.5
ø20	29.3	16	9.5	8
ø25	31.3	17	11.5	7.5
ø32	33.8	24	16	12
ø40	37.3	31	19.5	12.5
ø50	43.3	32	21.5	13.5
ø63	49.8	32	18.5	21.5
ø80	60.3	32	25	29.5
ø100	70.9	32	24	34

STS/STL-Q-R (rod side position locking)

Code / Bore size (mm)	FA	FB	RD	HD
ø20	29.3	16	34.5	8
ø25	31.3	17	36.5	7.5
ø32	33.8	24	41	12
ø40	37.3	31	69.5	13
ø50	43.3	32	71.5	13.5
ø63	49.8	32	68.5	21.5
ø80	60.3	32	100	33

STS/STL-Q-H (head side position locking)

Code / Bore size (mm)	FA	FB	RD	HD
ø20	29.3	16	9.5	33
ø25	31.3	17	11.5	32.5
ø32	33.8	24	16	37
ø40	37.3	31	19.5	63
ø50	43.3	32	21.5	63.5
ø63	49.8	32	18.5	71.5
ø80	60.3	32	25	108

STS/STL-C (air cushion)

Code / Bore size (mm)	FA	FB	RD	HD
ø25	31.3	17	26.5	17.5
ø32	33.8	24	33	20
ø40	37.3	31	36.5	21
ø50	43.3	32	37	22
ø63	49.8	32	42.5	24.5
ø80	60.3	32	59	49

LCM
LCR
LCG
LCW
LCX
STM
STG
STS/STL
STR2
UCA2
ULK*
JSK/M2
JSG
JSC3/JSC4
USSD
UFCD
USC
UB
JSB3
LMB
LML
HCM
HCA
LBC
CAC4
UCAC2
CAC-N
UCAC-N
RCS2
RCC2
PCC
SHC
MCP
GLC
MFC
BBS
RRC
GRC
RV3*
NHS
HRL
LN
Hand
Chuk
MecHnd/Chuk
ShkAbs
FJ
FK
SpdContr
Ending

As the selection conditions are different from those of general air cylinders, confirm whether the model is adequate or not according to the selection guide.

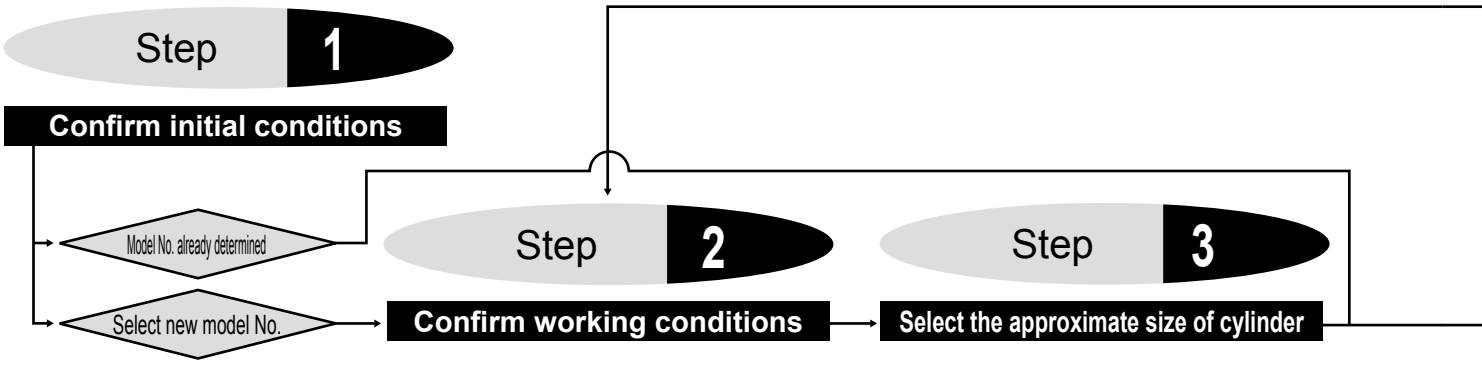

Step 2 Confirm working conditions

1. Working pressure P (MPa)
2. Total applied load W (N)
   [Total applied load]
   When determining the total applied load, take into account the weight of the guide rod part of the cylinder body.
   W = (Applied load) + (Jig load) + (Self-weight of guide rod part: Fa).
   Table 1 shows the formula for the self-weight of the guide rod part.

Table 1 Formula of the self weight of movable parts

Bore size	Fa: Self-weight of movable part (N)	
	STS	STL
ø 8	(0.36)+0.004 × ST	(0.43)+0.004 × ST
ø12	(0.54)+0.008 × ST	(0.69)+0.008 × ST
ø16	(0.81)+0.012 × ST	(1.10)+0.012 × ST
ø20	(1.30)+0.030 × ST	(2.00)+0.030 × ST
ø25	(1.50)+0.033 × ST	(2.20)+0.033 × ST
ø32	(3.90)+0.065 × ST	(5.80)+0.065 × ST
ø40	(4.10)+0.065 × ST	(6.10)+0.065 × ST
ø50	(7.40)+0.101 × ST	(11.2)+0.101 × ST
ø63	(8.30)+0.101 × ST	(12.1)+0.101 × ST
ø80	(26.2)+0.234 × ST	(40.6)+0.234 × ST
ø100	(52.3)+0.248 × ST	(65.8)+0.248 × ST

ST: Stroke length (mm)

3. Mounting orientation
   [Actuation]
   Horizontal, vertical-rise, vertical-decline
4. Stroke length ST (mm)
5. Operation time t(s)
6. Operation speed V (mm/s)
   Formula of cylinder average operation speed Va
   Va=ST/t (mm/s)

Step 3 Select the approximate size of cylinder

● Formula for calculating cylinder size (bore size)

$$F=\pi/4\times D^2\times P$$

$$\therefore D=\sqrt{4F/\pi P}$$

D: Cylinder bore size (mm)
P: Working pressure (MPa)
F: Cylinder theoretical thrust (N)

● When calculating from the theoretical thrust value in Table 2

Approximate required thrust ≥ Applied load x 2
("x 2" in "Applied load x 2" is for when the load factor is approx. 50% as a safety coefficient)

[Example] Working pressure 0.5(MPa)
Applied load 25(N)
Required thrust: 25(N)×2=50(N)
The bore size selected from Table 2 with theoretical thrust of 50 N and over at working pressure of 0.5 MPa will be ø12 or more.
D=ø12

[Cylinder theoretical thrust]

Table 2 Cylinder theoretical thrust table

Theoretical thrust table ø8, ø12 Unit: N

Actuation direction	Pressure MPa	Bore size mm	
		ø8	ø12
Push	0.15	7.5	17
	0.2	10	22.6
	0.3	15.1	33.9
	0.4	20	45.2
	0.5	25.1	56.6
	0.6	30.1	67.8
	0.7	35.2	79.1
	0.8	40.2	90.4
	0.9	45.2	101.8

* Refer to page 449 for theoretical thrust table.

Step 4

Calculate the total applied load (W) and each moment

To the next page

Step 4 Calculate the total applied load (W) and each moment

● Calculate the static load

(W_0) and the moment (M) based on the load cylinder mounting status.

W_0 = (Applied load) + (Jig load) (N)

$M_1 = F_1 \times \ell_1$ (N·m)

$M_2 = F_2 \times \ell_2$ (N·m)

$M_3 = F_3 \times \ell_3$ (N·m)

For values of F_1, F_2 and F_3, use those shown in Fig. 2.

Fig. 2 Formula for calculating each moment
Calculate each moment from total applied load, inertia force coefficient and eccentric distance.

[Bending moment]

$$M_1 = F_1 \times \ell_1 = 10 \times m_1 \times G \times \ell_1$$

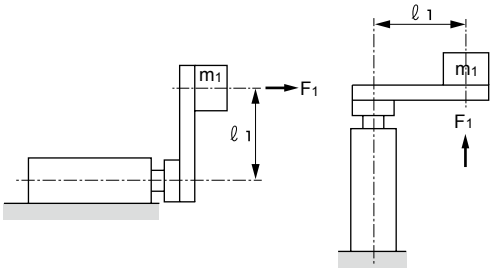

[Radial moment]

$$M_2 = F_2 \times \ell_2 = 10 \times m_2 \times G \times \ell_2$$

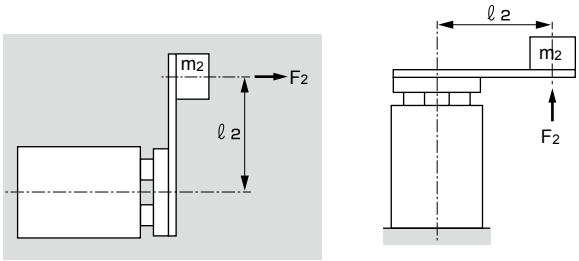

[Torsion moment]

$$M_3 = F_3 \times \ell_3 = 10 \times m_3 \times \ell_3$$

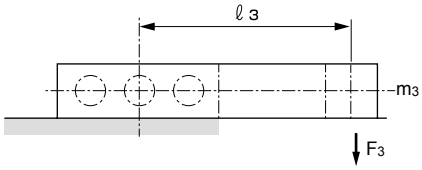

m_1 :
m_2 : } Load weight (kg)
m_3 :

ℓ_1 :
ℓ_2 : } Eccentric distance (m)
ℓ_3 :

G : Inertia force coefficient

Fig. 3 Trend of inertia force coefficient for guided cylinder

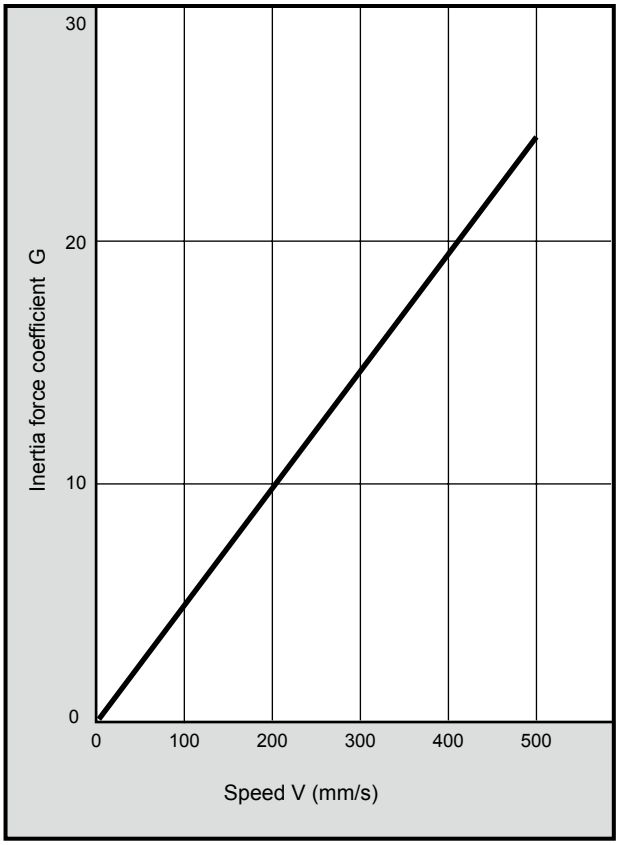

LCM
LCR
LCG
LCW
LCX
STM
STG
STS/STL
STR2
UCA2
ULK*
JSK/M2
JSG
JSC3/JSC4
USSD
UFCD
USC
UB
JSB3
LMB
LML
HCM
HCA
LBC
CAC4
UCAC2
CAC-N
UCAC-N
RCS2
RCC2
PCC
SHC
MCP
GLC
MFC
BBS
RRC
GRC
RV3*
NHS
HRL
LN
Hand
Chuk
MecHnd/Chuk
ShkAbs
FJ
FK
SpdContr
Ending

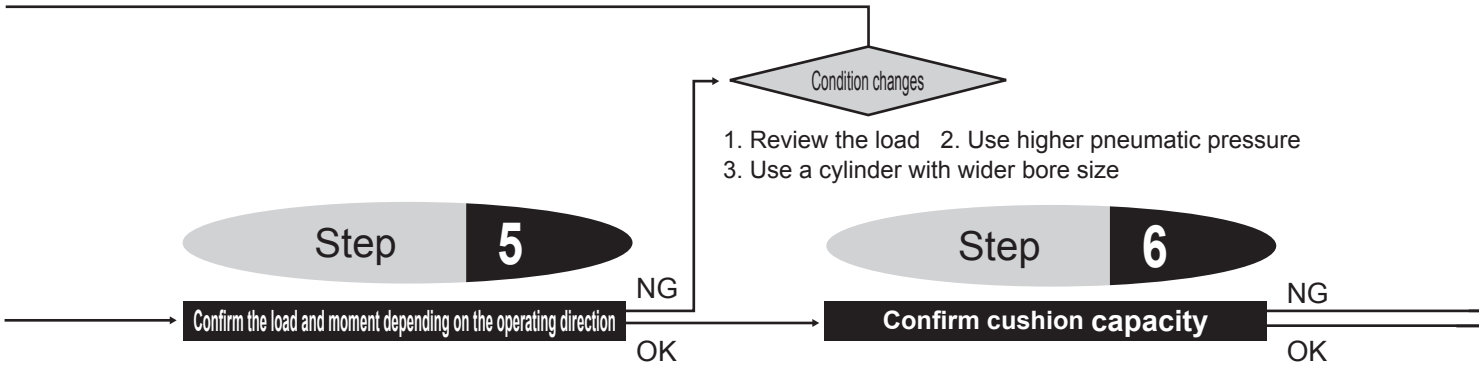

Step 5 Confirm the load and moment depending on the operating direction

5-1 Confirming total applied load

❶ For horizontal operation

The value of static applied load must be the allowable load value or less.

Static applied load Wo Value obtained in Step 4
Allowable lateral load Wmax Select from Table 3 or the graph depending on stroke

(When using a custom stroke, select the longer standard stroke)

Wo≤Wmax

Table 3 Allowable lateral load

Unit: N

Bore size (mm)	Type	Bearing	STS 10	STS 20	STS 25
ø 8	ST$^{S}_{L}$-M-8	Metal bush bearing	14	11	-
	ST$^{S}_{L}$-B-8	Ball bearing	16	11	-
ø12	ST$^{S}_{L}$-M-12	Metal bush bearing	23	19	-
	ST$^{S}_{L}$-B-12	Ball bearing	30	21	-
ø16	ST$^{S}_{L}$-M-16	Metal bush bearing	40	34	-
	ST$^{S}_{L}$-B-16	Ball bearing	44	32	-
ø20	ST$^{S}_{L}$-M-20	Metal bush bearing	-	-	48
	ST$^{S}_{L}$-B-20	Ball bearing	-	-	45
ø25	ST$^{S}_{L}$-M-25	Metal bush bearing	-	-	48
	ST$^{S}_{L}$-B-25	Ball bearing	-	-	45
ø32	ST$^{S}_{L}$-M-32	Metal bush bearing	-	-	141
	ST$^{S}_{L}$-B-32	Ball bearing	-	-	49

* Refer to page 564 for allowable lateral load.
Also refer to the graphs on pages 566 to 569 for eccentric load.

❷ For vertical operation

The total applied load value must be the value obtained by applying the load factor to the theoretical thrust

● Calculation of load factor

Total applied load W Value obtained in Step 2
Theoretical thrust of cylinder F Select from the theoretical thrust table on page 449 depending on the pressure

α = W/F x 100 (%)

● Determine the load factor by taking into account the status of utilization such as stability margin and service life of the cylinder. For general use, the value within the range in Table 4 is desirable.

Table 4 Appropriate range of load factor (reference value)

Working pressure (MPa)	Load factor (%)
0.1 to 0.3	α ≤ 40
0.3 to 0.6	α ≤ 50
0.6 to 1.0	α ≤ 60

● A lateral load works when an eccentric load is applied.
The lateral load should be within the allowable lateral load in Table 3.

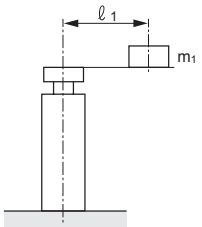

$$\frac{m_1 \times \ell_1 \times 10}{L} \leq W_{max}$$

st: Stroke (m)

Bore size	L	Bore size	L
ø8	0.015+st	ø32	0.022+st
ø12	0.015+st	ø40	0.022+st
ø16	0.016+st	ø50	0.025+st
ø20	0.016+st	ø63	0.025+st
ø25	0.016+st	ø80	0.046+st
		ø100	0.055+st

5-2 Confirming static moment

❶ Divide the value of bending moment and radial moment by the value in Table 5 to obtain the moment ratio and check that the total value of the moment ratio is 1.0 or less.

● Calculation of moment ratio

Bending moment M_1 } Calculated value
Radial moment M_2 } in Step 4

$M_1/M_1max+M_2/M_2max \leq 1.0$

Condition changes

1. Install an external shock absorber
2. Decrease the operation speed
3. Use a cylinder with larger bore size

Selection complete

Table 5 Allowable value of moment (N·m)

Bore size (mm)	Allowable bending moment $M_{1\,max}$, $M_{2\,max}$ (N·m)
ø8	4.1
ø12	6.1
ø16	19.3
ø20	32.6
ø25	48.5
ø32	107.4
ø40	107.4
ø50	201.7
ø63	201.7
ø80	726.0
ø100	726.0

❷ The torsion moment must be the allowable torque value or less.

Torsion moment M3 Value obtained in Step 4

Allowable torque

M3max Select from Table 6 depending on the stroke

(When using a custom stroke, select the longer standard stroke)

$M_3 \leq M_{3max}$

Table 6 Allowable torque (N·m)

Bore size (mm)	Type	Bearing	STS 10	STS 20	STS 25
ø 8	ST^S_L-M-8	Metal bush bearing	0.14	0.11	-
	ST^S_L-B-8	Ball bearing	0.16	0.11	-
ø 12	ST^S_L-M-12	Metal bush bearing	0.24	0.19	-
	ST^S_L-B-12	Ball bearing	0.31	0.22	-
ø 16	ST^S_L-M-16	Metal bush bearing	0.46	0.39	-
	ST^S_L-B-16	Ball bearing	0.51	0.37	-
ø 20	ST^S_L-M-20	Metal bush bearing	-	-	0.71
	ST^S_L-B-20	Ball bearing	-	-	1.19
ø 25	ST^S_L-M-25	Metal bush bearing	-	-	0.76
	ST^S_L-B-25	Ball bearing	-	-	1.28
ø 32	ST^S_L-M-32	Metal bush bearing	-	-	2.86
	ST^S_L-B-32	Ball bearing	-	-	0.99
ø 40	ST^S_L-M-40	Metal bush bearing	-	-	3.17
	ST^S_L-B-40	Ball bearing	-	-	1.10
ø 50	ST^S_L-M-50	Metal bush bearing	-	-	5.86
	ST^S_L-B-50	Ball bearing	-	-	2.01
ø 63	ST^S_L-M-63	Metal bush bearing	-	-	6.60
	ST^S_L-B-63	Ball bearing	-	-	2.26
ø 80	ST^S_L-M-80	Metal bush bearing	-	-	13.95
	ST^S_L-B-80	Ball bearing	-	-	8.48
ø100	ST^S_L-M-100	Metal bush bearing	-	-	18.23
	ST^S_L-B-100	Ball bearing	-	-	11.07

* Refer to page 564 for allowable torque.

Step 6 Confirm cushion capacity

Check if the kinetic energy generated by an actual load can be absorbed by the cylinder cushion.

● The allowable absorbed energy of cylinder (E_1) depends on the cylinder model. Use the values in Table 7 for STS and STL.

● Formula for calculating the piston kinetic energy (E_2)

$$E_2 = 1/2 \times W \times V^2 \times \frac{1}{10} \text{ (J)}$$

W: Total applied load (N) Value obtained in Step 2

V: Speed of the piston entering the cushion (m/s)

V = ST/t x (1 + 1.5 x α/100)

ST : Stroke (m)

t : Operating time (s)

α : Load factor (%)

Allowable absorbed energy of cylinder

● The kinetic energy absorption performance of the cylinder's cushion depends on the cylinder bore size. For the guided cylinder, use the values in Table 7 for comparison.

Table 7 Allowable absorbed energy value (E1) of STS/STL

Bore size (mm)	Allowable absorbed energy (J) Rubber cushion	Rubber-air cushion	Air cushion	Without cushion
ø8	0.029	—	—	—
ø12	0.056	—	—	0.004
ø16	0.088	—	—	0.010
ø20	0.157	—	—	0.016
ø25	0.157	—	1.18	0.021
ø32	0.401	0.401	2.27	0.025
ø40	0.627	0.627	3.05	0.092
ø50	0.980	0.980	3.81	0.100
ø63	1.560	1.560	15.64	0.120
ø80	2.510	2.510	20.18	0.270
ø100	3.920	—	—	0.560

$E_1 > E_2$

(Allowable absorbed energy) > (Kinetic energy of piston)

Selection complete

$E_1 < E_2$

(Allowable absorbed energy) < (Kinetic energy of piston)

LCM
LCR
LCG
LCW
LCX
STM
STG
STS/STL
STR2
UCA2
ULK*
JSK/M2
JSG
JSC3/JSC4
USSD
UFCD
USC
UB
JSB3
LMB
LML
HCM
HCA
LBC
CAC4
UCAC2
CAC-N
UCAC-N
RCS2
RCC2
PCC
SHC
MCP
GLC
MFC
BBS
RRC
GRC
RV3*
NHS
HRL
LN
Hand
Chuk
MecHnd/Chuk
ShkAbs
FJ
FK
SpdContr
Ending

● Short stroke

Unit: g

Model series	Bore size (mm)	Bearing	Weight for 0 mm stroke: Cylinder body	Weight for 0 mm stroke: End plate Standard	Weight for 0 mm stroke: End plate Steel	Weight per switch (Grommet)	Additional weight per St = 25 mm (ø8 to ø16: Additional weight per St = 10 mm)
● Standard single rod STS-$^{M}_{B}$ ● Low speed STS-$^{M}_{B}$O ● Copper and PTFE free STS-$^{M}_{B}$-P6 ● Corrosion proof STS-$^{M}_{B}$-M/M1 ● Heat resistance STS-$^{M}_{B}$T ● Packing fluoro rubber STS-$^{M}_{B}$T2 ● Rubber-air cushioned STS-$^{M}_{B}$-*C ● Fine speed STS-$^{M}_{B}$F	ø 8	M	102	22	62	Refer to the weight in the switch specifications.	29
		B	89				
	ø12	M	151	27	76		37
		B	154				
	ø16	M	225	37	104		47
		B	229				
	ø20	M	483	72	200		150
		B	363				
	ø25	M	534	78	219		169
		B	415				
	ø32	M	924	162	451		231
		B	804				
	ø40	M	1333	195	543		283
		B	1214				
	ø50	M	2026	415	1158		428
		B	1915				
	ø63	M	2803	530	1478		557
		B	2569				
	ø80	M	6435	1335	3720		1265
		B	5876				1150
	ø100	M	10850	2685	7491		1933
		B	9934				1817
● Stroke adjustable STS-$^{M}_{B}$P	ø 8	M	260	22	62	Refer to the weight in the switch specifications.	33
		B	243				
	ø12	M	340	27	76		45
		B	333				
	ø16	M	462	37	104		59
		B	454				
	ø20	M	742	72	200		210
		B	602				
	ø25	M	836	78	219		229
		B	697				
	ø32	M	1499	162	451		335
		B	1331				
	ø40	M	2006	195	543		407
		B	1841				
	ø50	M	3323	415	1158		620
		B	3106				
	ø63	M	4458	530	1478		749
		B	4118				
	ø80	M	9505	1335	3720		1755
		B	8776				1526
● Position locking STS-$^{M}_{B}$Q-H (with head side position locking)	ø20	M	680	72	200	Refer to the weight in the switch specifications.	150
		B	560				
	ø25	M	767	78	219		169
		B	648				
	ø32	M	1235	162	451		231
		B	1115				
	ø40	M	2183	195	543		283
		B	2064				
	ø50	M	3305	415	1158		428
		B	3194				
	ø63	M	4554	530	1478		557
		B	4320				
	ø80	M	11583	1335	3720		1265
		B	10679				1150
● Position locking STS-$^{M}_{B}$Q-R (with rod side position locking)	ø20	M	666	72	200	Refer to the weight in the switch specifications.	150
		B	546				
	ø25	M	749	78	219		169
		B	630				
	ø32	M	1221	162	451		231
		B	1101				
	ø40	M	2126	195	543		283
		B	2007				
	ø50	M	3214	415	1158		428
		B	3103				
	ø63	M	4434	530	1478		557
		B	4200				
	ø80	M	11340	1335	3720		1265
		B	10436				1150

● Short stroke

Unit: g

Model series	Bore size (mm)	Bearing	Weight for 0 mm stroke: Cylinder body	Weight for 0 mm stroke: End plate Standard	Weight for 0 mm stroke: End plate Steel	Weight for 0 mm stroke: Weight per switch (Grommet)	Additional weight per St = 25 mm
● Coil scraper STS-$^{M}_{B}$G1 ● Rubber scraper STS-$^{M}_{B}$G ● Coolant proof STS-$^{M}_{B}$G2, G3 ● Anti-spatter adherence STS-$^{M}_{B}$G4	ø20	M	572	72	200	Refer to the weight in the switch specifications.	150
		B	452				
	ø25	M	630	78	219		169
		B	511				
	ø32	M	1083	162	451		231
		B	963				
	ø40	M	1667	195	543		283
		B	1548				
	ø50	M	2299	415	1158		428
		B	2188				
	ø63	M	3125	530	1478		557
		B	2891				
	ø80	M	6861	1335	3720		1265
		B	6302				1150
● Valve equipped STS-$^{M}_{B}$V$^{1}_{2}$ (with valve on front)	ø20	M	668	72	200	Refer to the weight in the switch specifications.	150
		B	548				
	ø25	M	719	78	219		169
		B	600				
	ø32	M	1136	162	451		231
		B	1016				
	ø40	M	1648	195	543		283
		B	1529				
	ø50	M	2428	415	1158		428
		B	2317				
	ø63	M	3205	530	1478		557
		B	2971				
● Valve equipped STS-$^{M}_{B}$V$^{1}_{2}$S (with valve on side)	ø20	M	663	72	200	Refer to the weight in the switch specifications.	150
		B	543				
	ø25	M	714	78	219		169
		B	595				
	ø32	M	1104	162	451		231
		B	684				
	ø40	M	1651	195	543		283
		B	1532				
	ø50	M	2344	45	1158		428
		B	2233				
	ø63	M	3121	530	1478		557
		B	2887				

Note: Refer to Ending Page 16 for the switch weight of 3 m and 5 m switch lead wire lengths.

LCM
LCR
LCG
LCW
LCX
STM
STG
STS/STL
STR2
UCA2
ULK*
JSK/M2
JSG
JSC3/JSC4
USSD
UFCD
USC
UB
JSB3
LMB
LML
HCM
HCA
LBC
CAC4
UCAC2
CAC-N
UCAC-N
RCS2
RCC2
PCC
SHC
MCP
GLC
MFC
BBS
RRC
GRC
RV3*
NHS
HRL
LN
Hand
Chuk
MecHnd/Chuk
ShkAbs
FJ
FK
SpdContr
Ending

● Long stroke

Unit: g

Model series	Bore size (mm)	Bearing	Weight for 0 mm stroke: Cylinder body	Weight for 0 mm stroke: End plate Standard	Weight for 0 mm stroke: End plate Steel	Weight per switch (Grommet)	Additional weight per St = 25 mm
● Standard single rod STL-$^{M}_{B}$ ● Low speed STL-$^{M}_{B}$O ● Copper and PTFE free STL-$^{M}_{B}$-P6 ● Corrosion proof STL-$^{M}_{B}$-M/M1 ● Heat resistance STL-$^{M}_{B}$T ● Packing fluoro rubber STL-$^{M}_{B}$T2 ● Rubber-air cushioned STL-$^{M}_{B}$-*C ● Fine speed STL-$^{M}_{B}$F	ø 8	M	103	22	62	Refer to the weight in the switch specifications.	73
		B	99				
	ø12	M	159	27	76		91
		B	173				
	ø16	M	232	37	104		119
		B	265				
	ø20	M	890	72	200		150
		B	751				
	ø25	M	979	78	219		169
		B	840				
	ø32	M	1705	162	451		231
		B	1520				
	ø40	M	2218	195	543		283
		B	2033				
	ø50	M	3587	415	1158		428
		B	3228				
	ø63	M	4501	530	1478		557
		B	4142				
	ø80	M	10337	1335	3720		1265
		B	9341				1150
	ø100	M	16649	2685	7491		1933
		B	15385				1817
● Stroke adjustable STL-$^{M}_{B}$P	ø 8	M	261	22	62	Refer to the weight in the switch specifications.	84
		B	253				
	ø12	M	348	27	76		111
		B	352				
	ø16	M	469	37	104		150
		B	490				
	ø20	M	1149	72	200		210
		B	990				
	ø25	M	1281	78	219		229
		B	1122				
	ø32	M	2280	162	451		335
		B	2049				
	ø40	M	2891	195	543		407
		B	2658				
	ø50	M	4884	415	1158		620
		B	4419				
	ø63	M	6156	530	1478		749
		B	5691				
	ø80	M	12035	1335	3720		1755
		B	11191				1526
● Position locking STL-$^{M}_{B}$Q-H (with head side position locking)	ø20	M	1087	72	200	Refer to the weight in the switch specifications.	150
		B	948				
	ø25	M	1212	78	219		169
		B	1073				
	ø32	M	2016	162	451		231
		B	1831				
	ø40	M	3068	195	543		283
		B	2883				
	ø50	M	4866	415	1158		428
		B	4507				
	ø63	M	6252	530	1478		557
		B	5893				
	ø80	M	15485	1335	3720		1265
		B	14144				1150
● Position locking STL-$^{M}_{B}$Q-R (with rod side position locking)	ø20	M	1073	72	200	Refer to the weight in the switch specifications.	150
		B	934				
	ø25	M	1194	78	219		169
		B	1056				
	ø32	M	2002	162	451		231
		B	1867				
	ø40	M	3011	195	543		283
		B	2826				
	ø50	M	4775	415	1158		428
		B	4416				
	ø63	M	6132	530	1478		557
		B	5773				
	ø80	M	15242	1335	3720		1265
		B	13401				1150

● Long stroke

Unit: g

Model series	Bore size (mm)	Bearing	Weight for 0 mm stroke: Cylinder body	End plate: Standard	End plate: Steel	Weight per switch (Grommet)	Additional weight per St = 25 mm
● Coil scraper STL-$^{M}_{B}$G1 ● Rubber scraper STL-$^{M}_{B}$G ● Coolant proof STL-$^{M}_{B}$G2, G3 ● Anti-spatter adherence STL-$^{M}_{B}$G4	ø20	M	979	72	200	Refer to the weight in the switch specifications.	150
		B	840				
	ø25	M	1075	78	219		169
		B	936				
	ø32	M	1864	162	451		231
		B	1679				
	ø40	M	2552	195	543		283
		B	2367				
	ø50	M	3860	415	1158		428
		B	3501				
	ø63	M	4823	530	1478		557
		B	4464				
	ø80	M	10763	1335	3720		1265
		B	9767				1150
● Valve equipped STL-$^{M}_{B}$V$^{1}_{2}$(with valve on front)	ø20	M	1075	72	200	Refer to the weight in the switch specifications.	150
		B	936				
	ø25	M	1164	78	219		169
		B	1025				
	ø32	M	1917	162	451		231
		B	1732				
	ø40	M	2533	195	543		283
		B	2348				
	ø50	M	3989	415	1158		428
		B	3630				
	ø63	M	4903	530	1478		557
		B	4544				
● Valve equipped STL-$^{M}_{B}$V$^{1}_{2}$S (with valve on side)	ø20	M	1070	72	200	Refer to the weight in the switch specifications.	150
		B	931				
	ø25	M	1159	78	219		169
		B	1020				
	ø32	M	1885	162	451		231
		B	1700				
	ø40	M	2536	195	543		283
		B	2351				
	ø50	M	3905	415	1158		428
		B	3546				
	ø63	M	4819	530	1478		557
		B	4460				

LCM
LCR
LCG
LCW
LCX
STM
STG
STS/STL
STR2
UCA2
ULK*
JSK/M2
JSG
JSC3/JSC4
USSD
UFCD
USC
UB
JSB3
LMB
LML
HCM
HCA
LBC
CAC4
UCAC2
CAC-N
UCAC-N
RCS2
RCC2
PCC
SHC
MCP
GLC
MFC
BBS
RRC
GRC
RV3*
NHS
HRL
LN
Hand
Chuk
MecHnd/Chuk
ShkAbs
FJ
FK
SpdContr
Ending

Deflection

For the inclination that is produced at the end of the end plate when no load is applied, the value in the graph below is used as a guide. (Excluding sag of guide rod)

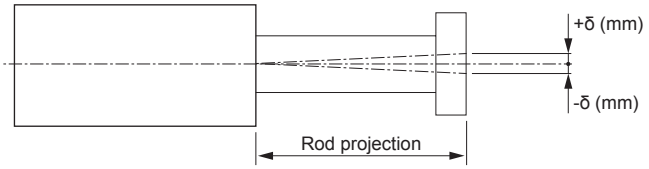

ø8 to ø16 metal bush bearing

STS-M

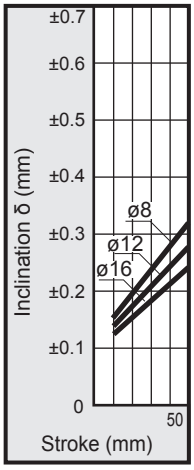

STL-M

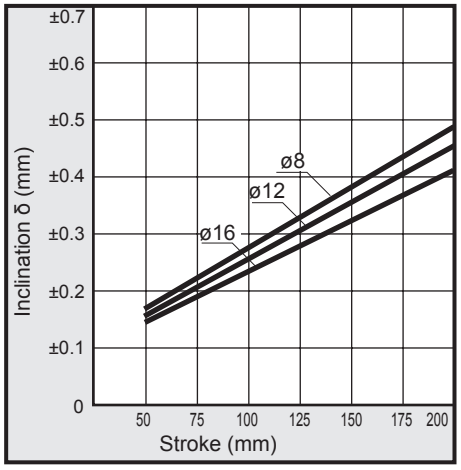

ø8 to ø16 ball bearing

STS-B

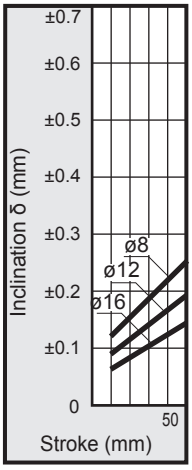

STL-B

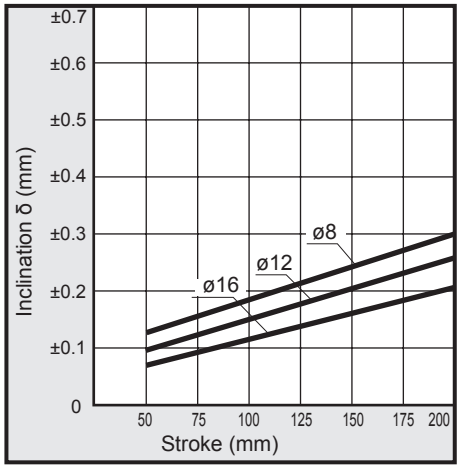

ø20 to ø100 Metal bush bearing

STS-M

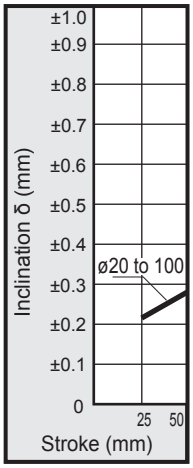

STL-M

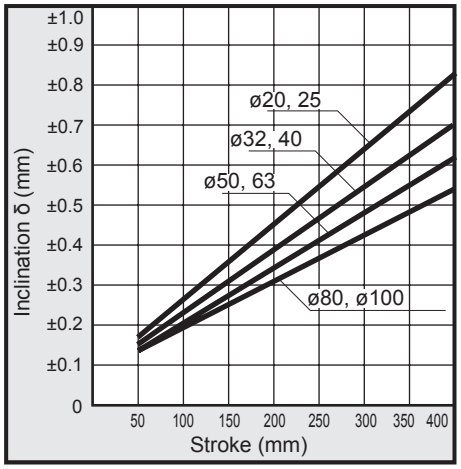

ø20 to ø80 ball bearing

STS-B

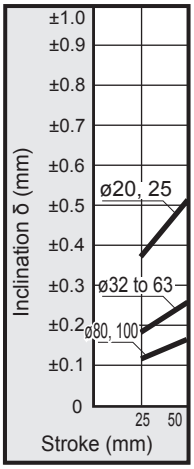

STL-B

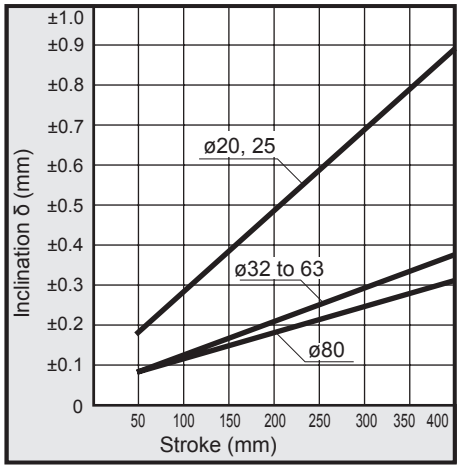

ø100 ball bearing

STS-B

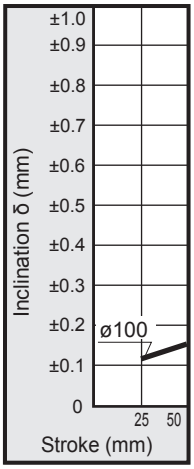

STL-B

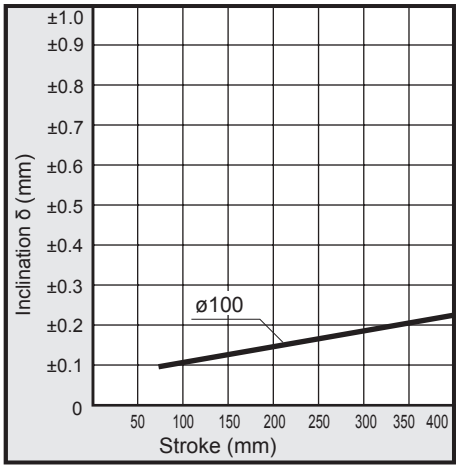

Specified range when using the product as a stopper

Impact load

STS-M-8 to 16 (metal bush bearing)

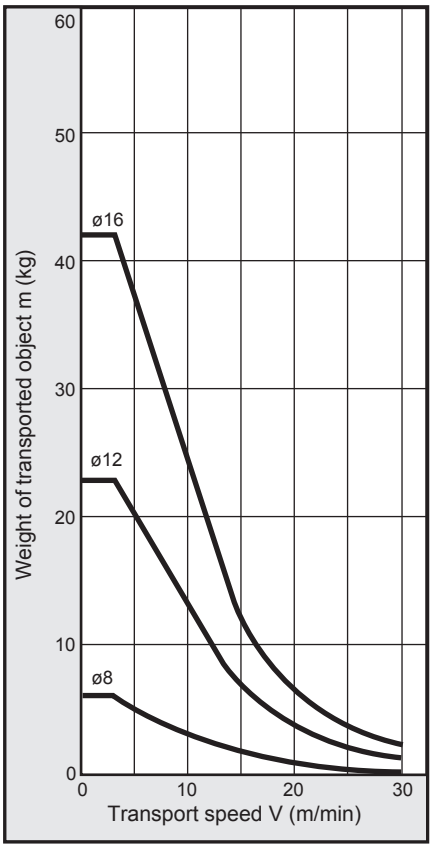

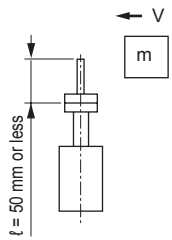

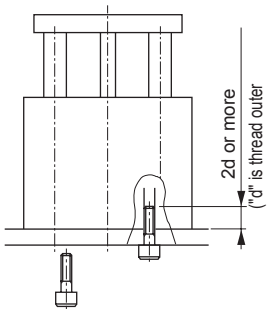

Safety precautions

*1 : When using the cylinder as a stopper, select a model with 50 mm stroke or less (STS-M). (30 mm stroke or less for ø8 to ø16)

*2 : Make sure that the total length of the stopper section ℓ is 50 mm or less.

*3 : Make sure that the screw insertion depth of the bolt is 2d or more when fixing the cylinder body and consider countermeasures for preventing looseness (adhesive, spring washer, etc.). (for ø80 and ø100, make sure that the screw insertion depth is 1d. "d" is thread outer diameter)

*4 : STS-B (ball bearing) cannot be used as a stopper.

Impact load

STS-M-20 to 80 (metal bush bearing)

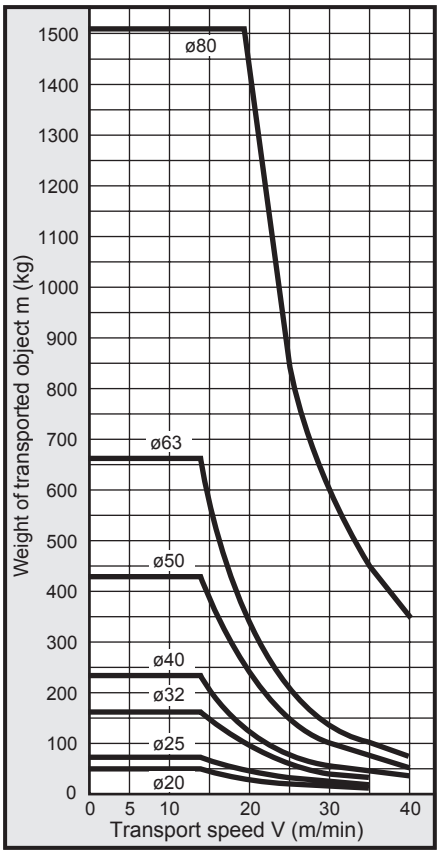

STS-M-100 (metal bush bearing)

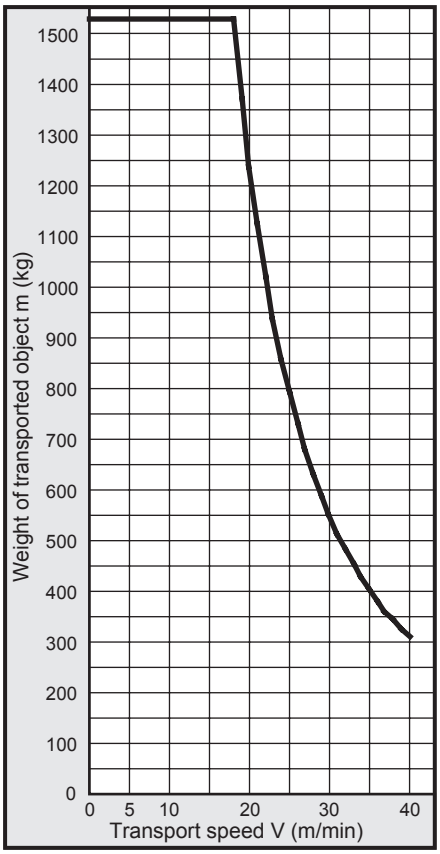

LCM
LCR
LCG
LCW
LCX
STM
STG
STS/STL
STR2
UCA2
ULK*
JSK/M2
JSG
JSC3/JSC4
USSD
UFCD
USC
UB
JSB3
LMB
LML
HCM
HCA
LBC
CAC4
UCAC2
CAC-N
UCAC-N
RCS2
RCC2
PCC
SHC
MCP
GLC
MFC
BBS
RRC
GRC
RV3*
NHS
HRL
LN
Hand
Chuk
MecHnd/Chuk
ShkAbs
FJ
FK
SpdContr
Ending

Allowable lateral load

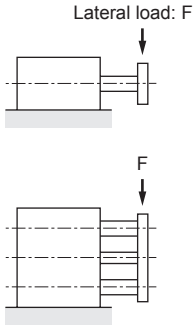

Unit: N

Bore size (mm)	Model No.	Bearing	STS 10	20	25	30	40	50	75	100
ø 8	ST$^{S}_{L}$-M-8	Metal bush bearing	14	11	-	9	8	7	-	-
	ST$^{S}_{L}$-B-8	Ball bearing	16	11	-	8	7	6	-	-
ø 12	ST$^{S}_{L}$-M-12	Metal bush bearing	23	19	-	16	14	12	-	-
	ST$^{S}_{L}$-B-12	Ball bearing	30	21	-	16	13	11	-	-
ø 16	ST$^{S}_{L}$-M-16	Metal bush bearing	40	34	-	29	25	22	-	-
	ST$^{S}_{L}$-B-16	Ball bearing	44	32	-	25	21	18	-	-
ø 20	ST$^{S}_{L}$-M-20	Metal bush bearing	-	-	48	-	-	35	-	-
	ST$^{S}_{L}$-B-20	Ball bearing	-	-	45	-	-	29	-	-
ø 25	ST$^{S}_{L}$-M-25	Metal bush bearing	-	-	48	-	-	35	-	-
	ST$^{S}_{L}$-B-25	Ball bearing	-	-	45	-	-	29	-	-
ø 32	ST$^{S}_{L}$-M-32	Metal bush bearing	-	-	141	-	-	109	-	-
	ST$^{S}_{L}$-B-32	Ball bearing	-	-	49	-	-	33	-	-
ø 40	ST$^{S}_{L}$-M-40	Metal bush bearing	-	-	141	-	-	109	-	-
	ST$^{S}_{L}$-B-40	Ball bearing	-	-	49	-	-	33	-	-
ø 50	ST$^{S}_{L}$-M-50	Metal bush bearing	-	-	213	-	-	170	-	-
	ST$^{S}_{L}$-B-50	Ball bearing	-	-	73	-	-	50	-	-
ø 63	ST$^{S}_{L}$-M-63	Metal bush bearing	-	-	213	-	-	170	-	-
	ST$^{S}_{L}$-B-63	Ball bearing	-	-	73	-	-	50	-	-
ø 80	ST$^{S}_{L}$-M-80	Metal bush bearing	-	-	372	-	-	316	275	243
	ST$^{S}_{L}$-B-80	Ball bearing	-	-	226	-	-	165	133	112
ø100	ST$^{S}_{L}$-M-100	Metal bush bearing	-	-	372	-	-	316	275	243
	ST$^{S}_{L}$-B-100	Ball bearing	-	-	226	-	-	165	133	112

*1: When operating the unit under a load, calculate the allowable lateral load using the two equations below.
[Anti-corrosion] Catalog allowable lateral load value x 0.6
[Optional variations other than the above] Catalog allowable lateral load value x 0.9
*2: When designing, be sure to consider the safety factor according to the operating conditions.

Allowable torque

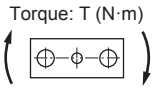

Unit: N·m

Bore size (mm)	Model No.	Bearing	STS 10	20	25	30	40	50	75	100
ø 8	ST$^{S}_{L}$-M-8	Metal bush bearing	0.14	0.11	-	0.09	0.08	0.07	-	-
	ST$^{S}_{L}$-B-8	Ball bearing	0.16	0.11	-	0.08	0.07	0.06	-	-
ø 12	ST$^{S}_{L}$-M-12	Metal bush bearing	0.24	0.19	-	0.16	0.14	0.12	-	-
	ST$^{S}_{L}$-B-12	Ball bearing	0.31	0.22	-	0.16	0.13	0.11	-	-
ø 16	ST$^{S}_{L}$-M-16	Metal bush bearing	0.46	0.39	-	0.33	0.29	0.25	-	-
	ST$^{S}_{L}$-B-16	Ball bearing	0.51	0.37	-	0.29	0.24	0.21	-	-
ø 20	ST$^{S}_{L}$-M-20	Metal bush bearing	-	-	0.71	-	-	0.52	-	-
	ST$^{S}_{L}$-B-20	Ball bearing	-	-	1.19	-	-	0.80	-	-
ø 25	ST$^{S}_{L}$-M-25	Metal bush bearing	-	-	0.76	-	-	0.55	-	-
	ST$^{S}_{L}$-B-25	Ball bearing	-	-	1.28	-	-	0.85	-	-
ø 32	ST$^{S}_{L}$-M-32	Metal bush bearing	-	-	2.86	-	-	2.21	-	-
	ST$^{S}_{L}$-B-32	Ball bearing	-	-	0.99	-	-	0.67	-	-
ø 40	ST$^{S}_{L}$-M-40	Metal bush bearing	-	-	3.17	-	-	2.45	-	-
	ST$^{S}_{L}$-B-40	Ball bearing	-	-	1.10	-	-	0.74	-	-
ø 50	ST$^{S}_{L}$-M-50	Metal bush bearing	-	-	5.86	-	-	4.68	-	-
	ST$^{S}_{L}$-B-50	Ball bearing	-	-	2.01	-	-	1.38	-	-
ø 63	ST$^{S}_{L}$-M-63	Metal bush bearing	-	-	6.60	-	-	5.27	-	-
	ST$^{S}_{L}$-B-63	Ball bearing	-	-	2.26	-	-	1.55	-	-
ø 80	ST$^{S}_{L}$-M-80	Metal bush bearing	-	-	13.95	-	-	11.85	10.31	9.11
	ST$^{S}_{L}$-B-80	Ball bearing	-	-	8.48	-	-	6.19	4.99	4.20
ø100	ST$^{S}_{L}$-M-100	Metal bush bearing	-	-	18.23	-	-	15.48	13.48	11.91
	ST$^{S}_{L}$-B-100	Ball bearing	-	-	11.07	-	-	8.09	6.52	5.49

Non-rotating accuracy

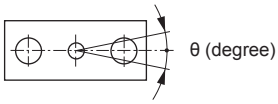

Technical data❹ Allowable lateral load/allowable torque/non-rotating accuracy

Unit: N

Stroke (mm)														
STL														
50	75	100	125	150	175	200	225	250	275	300	325	350	375	400
12	9	7	6	5	5	4	-	-	-	-	-	-	-	-
16	11	9	7	5	4	4	-	-	-	-	-	-	-	-
20	16	13	11	10	9	8	-	-	-	-	-	-	-	-
23	16	13	10	8	7	6	-	-	-	-	-	-	-	-
35	29	24	21	19	17	15	-	-	-	-	-	-	-	-
34	25	19	16	13	11	10	-	-	-	-	-	-	-	-
54	45	38	33	30	27	24	22	20	19	17	16	15	14	14
68	50	39	32	27	23	20	18	16	14	13	12	11	10	9
54	45	38	33	30	27	24	22	20	19	17	16	15	14	14
68	50	39	32	27	23	20	18	16	14	13	12	11	10	9
161	138	121	108	97	88	81	75	69	65	61	57	54	51	48
100	76	62	51	44	38	34	30	27	25	22	21	19	18	16
161	138	121	108	97	88	81	75	69	65	61	57	54	51	48
100	76	62	51	44	38	34	30	27	25	22	21	19	18	16
243	213	189	170	155	142	131	121	113	106	100	94	89	85	81
161	126	103	87	75	66	58	52	47	43	40	36	34	31	29
243	213	189	170	155	142	131	121	113	106	100	94	89	85	81
161	126	103	87	75	66	58	52	47	43	40	36	34	31	29
-	402	367	338	312	291	272	255	241	228	216	205	196	187	179
-	235	197	170	149	133	120	109	99	91	85	79	73	69	64
-	402	367	338	312	291	272	-	-	-	-	-	-	-	-
-	235	197	170	149	133	120	-	-	-	-	-	-	-	-

Unit: N·m

Stroke (mm)														
STL														
50	75	100	125	150	175	200	225	250	275	300	325	350	375	400
0.12	0.09	0.07	0.06	0.05	0.05	0.04	-	-	-	-	-	-	-	-
0.16	0.11	0.08	0.07	0.05	0.04	0.04	-	-	-	-	-	-	-	-
0.21	0.16	0.13	0.11	0.10	0.09	0.08	-	-	-	-	-	-	-	-
0.24	0.16	0.13	0.10	0.08	0.07	0.06	-	-	-	-	-	-	-	-
0.40	0.33	0.28	0.24	0.22	0.20	0.17	-	-	-	-	-	-	-	-
0.39	0.29	0.22	0.18	0.15	0.13	0.12	-	-	-	-	-	-	-	-
0.80	0.66	0.56	0.49	0.44	0.40	0.35	0.32	0.30	0.28	0.25	0.24	0.22	0.21	0.21
1.00	0.74	0.58	0.47	0.40	0.34	0.30	0.27	0.24	0.21	0.19	0.18	0.16	0.15	0.13
0.85	0.71	0.60	0.52	0.47	0.43	0.38	0.35	0.32	0.30	0.27	0.25	0.24	0.22	0.22
1.07	0.79	0.61	0.50	0.43	0.36	0.32	0.28	0.25	0.22	0.20	0.19	0.17	0.16	0.14
3.26	2.79	2.45	2.19	1.96	1.78	1.64	1.52	1.40	1.32	1.24	1.15	1.09	1.03	0.97
2.03	1.54	1.26	1.03	0.89	0.77	0.69	0.61	0.55	0.51	0.45	0.43	0.38	0.36	0.32
3.62	3.11	2.72	2.43	2.18	1.98	1.82	1.69	1.55	1.46	1.37	1.28	1.22	1.15	1.08
2.25	1.71	1.40	1.15	0.99	0.86	0.77	0.68	0.61	0.56	0.50	0.47	0.43	0.41	0.36
6.68	5.86	5.20	4.68	4.26	3.91	3.60	3.33	3.11	2.92	2.75	2.59	2.45	2.34	2.23
4.43	3.47	2.83	2.39	2.06	1.82	1.60	1.43	1.29	1.18	1.10	0.99	0.94	0.85	0.80
7.53	6.60	5.86	5.27	4.81	4.40	4.06	3.75	3.50	3.29	3.10	2.91	2.76	2.64	2.51
4.99	3.91	3.19	2.70	2.33	2.05	1.80	1.61	1.46	1.33	1.24	1.12	1.05	0.96	0.90
-	15.08	13.76	12.68	11.70	10.91	10.20	9.56	9.04	8.55	8.10	7.69	7.35	7.01	6.71
-	8.81	7.39	6.38	5.59	4.99	4.50	4.09	3.71	3.41	3.19	2.96	2.74	2.59	2.40
-	19.70	17.98	16.56	15.29	14.26	13.33	-	-	-	-	-	-	-	-
-	11.52	9.65	8.33	7.30	6.52	5.88	-	-	-	-	-	-	-	-

Item	Non-rotating accuracy θ (degrees)	
Bore size (mm)	Metal bush bearing	Ball bearing
ø 8	±0.09	±0.06
ø 12	±0.10	
ø 16		
ø 20		±0.08
ø 25		
ø 32	±0.08	±0.04
ø 40	±0.07	
ø 50		±0.03
ø 63	±0.06	
ø 80	±0.05	±0.03
ø100		

(Default at PULL) Note: Excluding sag of guide rod

LCM
LCR
LCG
LCW
LCX
STM
STG
STS/STL
STR2
UCA2
ULK*
JSK/M2
JSG
JSC3/JSC4
USSD
UFCD
USC
UB
JSB3
LMB
LML
HCM
HCA
LBC
CAC4
UCAC2
CAC-N
UCAC-N
RCS2
RCC2
PCC
SHC
MCP
GLC
MFC
BBS
RRC
GRC
RV3*
NHS
HRL
LN
Hand
Chuk
MecHnd/Chuk
ShkAbs
FJ
FK
SpdContr
Ending

■ Short stroke

Allowable lateral load Metal bush bearing

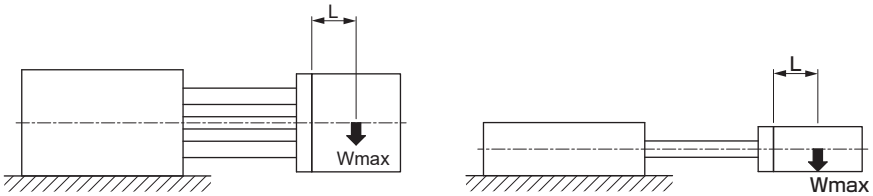

Wmax: Lateral load (N)
L: Load center of gravity position (mm)

● When L = 50 mm

STS-M-8 to 16

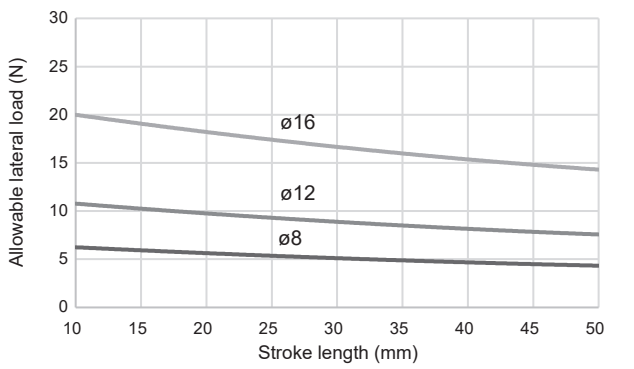

STS-M-20 to 63

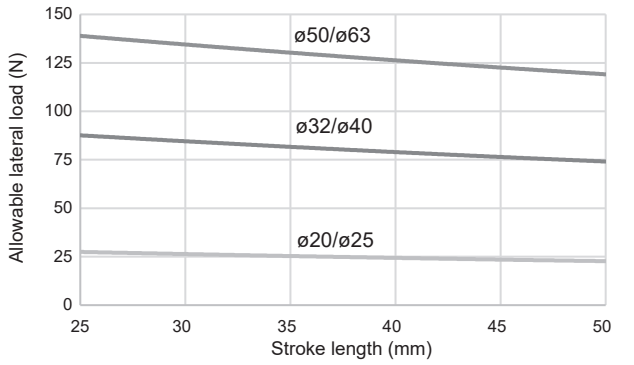

STS-M-80/100

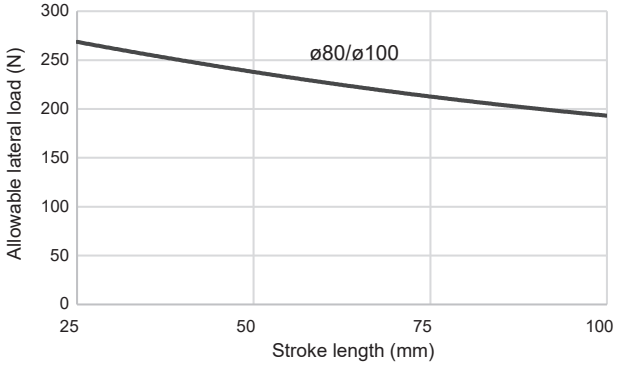

● When L = 100 mm

STS-M-8 to 16

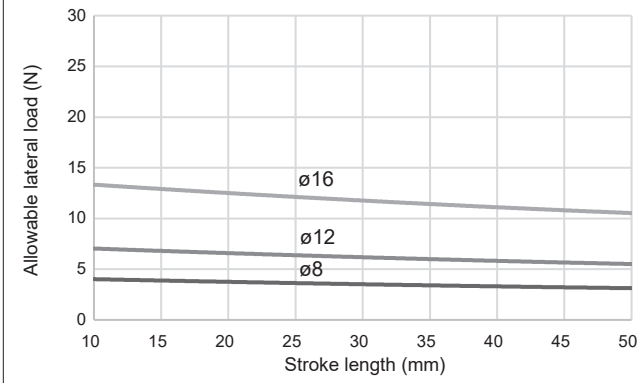

STS-M-20 to 63

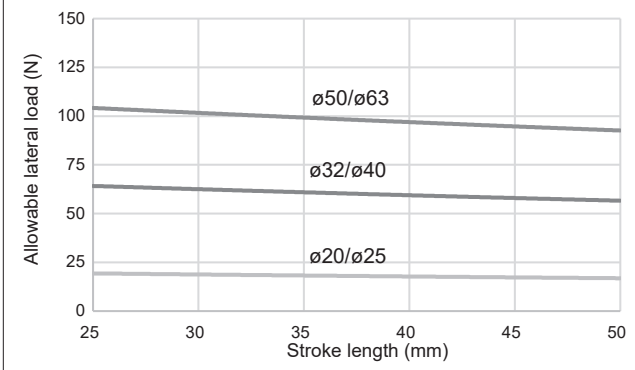

STS-M-80/100

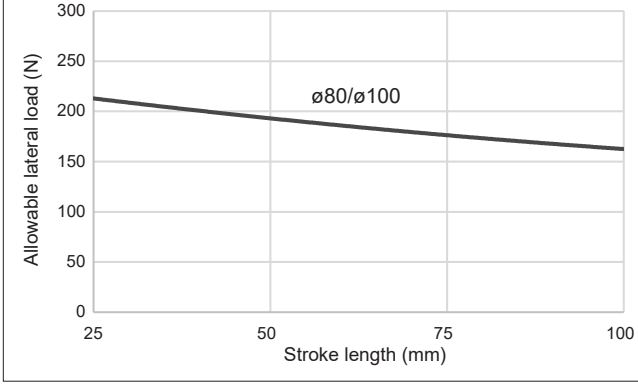

* 1: When operating the unit under a load, calculate the allowable lateral load using the two equations below.
[Corrosion-resistant] Catalog allowable lateral load value x 0.6
[Optional variations other than the above] Catalog allowable lateral load value x 0.9
2: When designing, be sure to consider the safety factor according to the operating conditions.

LCM
LCR
LCG
LCW
LCX
STM
STG
STS/STL
STR2
UCA2
ULK*
JSK/M2
JSG
JSC3/JSC4
USSD
UFCD
USC
UB
JSB3
LMB
LML
HCM
HCA
LBC
CAC4
UCAC2
CAC-N
UCAC-N
RCS2
RCC2
PCC
SHC
MCP
GLC
MFC
BBS
RRC
GRC
RV3*
NHS
HRL
LN
Hand
Chuk
MecHnd/Chuk
ShkAbs
FJ
FK
SpdContr
Ending

■ Short stroke

Allowable lateral load Ball bearing

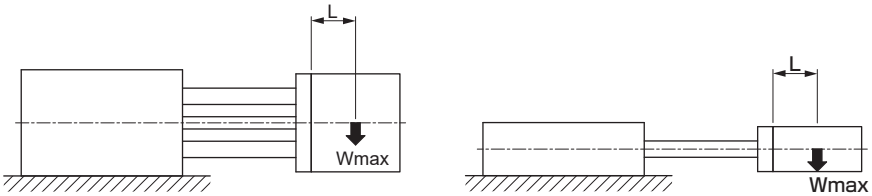

Wmax: Lateral load (N)
L: Load center of gravity position (mm)

● When L = 50 mm

STS-B-8 to 16

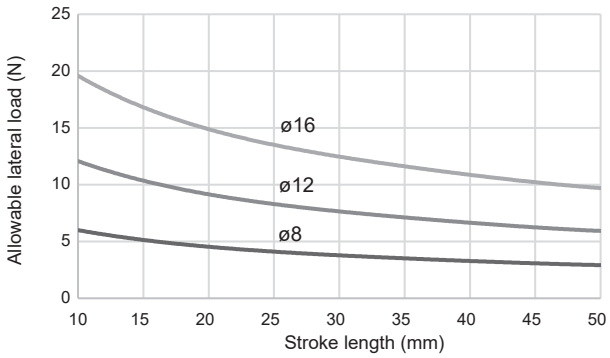

STS-B-20 to 63

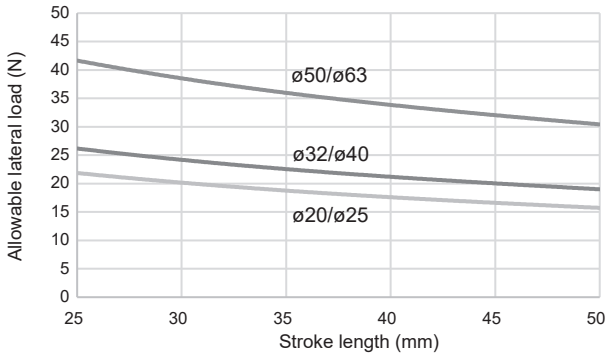

STS-B-80/100

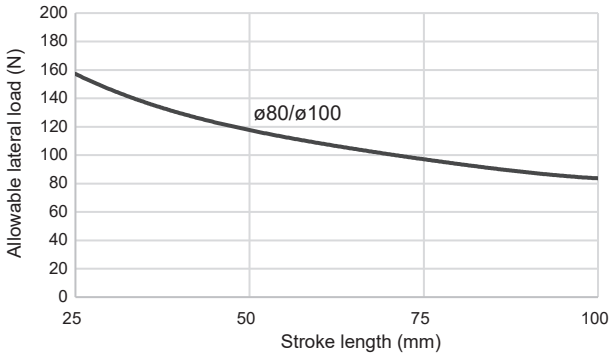

● When L = 100 mm

STS-B-8 to 16

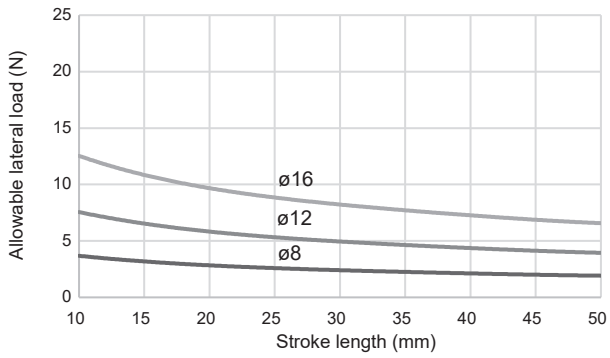

STS-B-20 to 63

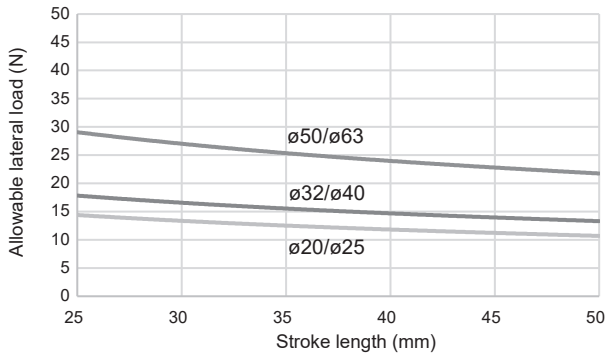

STS-B-80/100

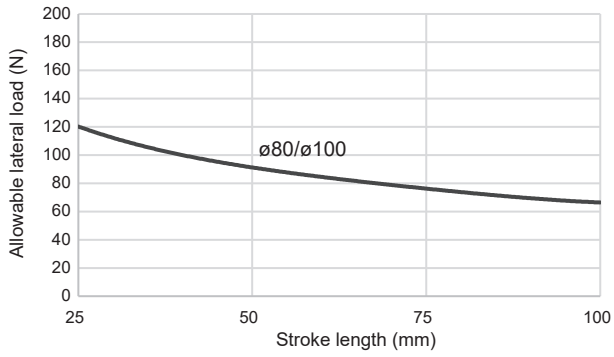

* 1: When operating the unit under a load, calculate the allowable lateral load using the two equations below.
[Corrosion-resistant] Catalog allowable lateral load value x 0.6
[Optional variations other than the above] Catalog allowable lateral load value x 0.9
2: When designing, be sure to consider the safety factor according to the operating conditions.

LCM
LCR
LCG
LCW
LCX
STM
STG
STS/STL
STR2
UCA2
ULK*
JSK/M2
JSG
JSC3/JSC4
USSD
UFCD
USC
UB
JSB3
LMB
LML
HCM
HCA
LBC
CAC4
UCAC2
CAC-N
UCAC-N
RCS2
RCC2
PCC
SHC
MCP
GLC
MFC
BBS
RRC
GRC
RV3*
NHS
HRL
LN
Hand
Chuk
MecHnd/Chuk
ShkAbs
FJ
FK
SpdContr
Ending

■ Long stroke

Allowable lateral load Metal bush bearing

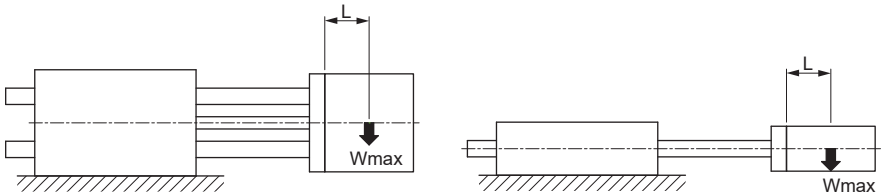

Wmax: Lateral load (N)
L: Load center of gravity position (mm)

● When L = 50 mm

STL-M-8 to 16

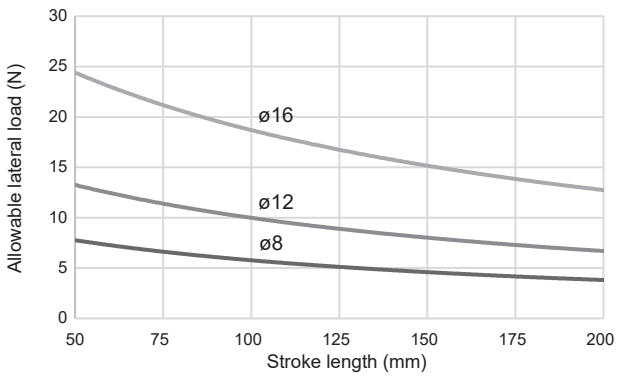

STL-M-20 to 63

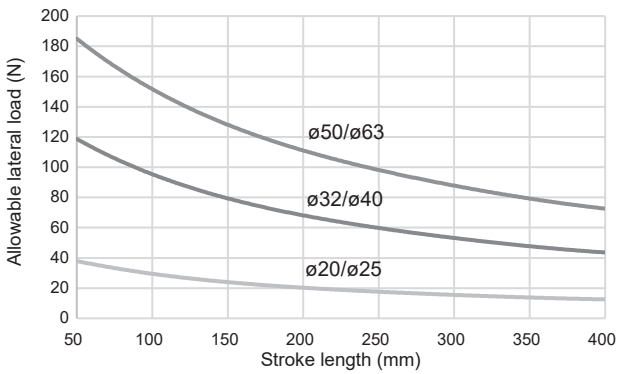

STL-M-80/100

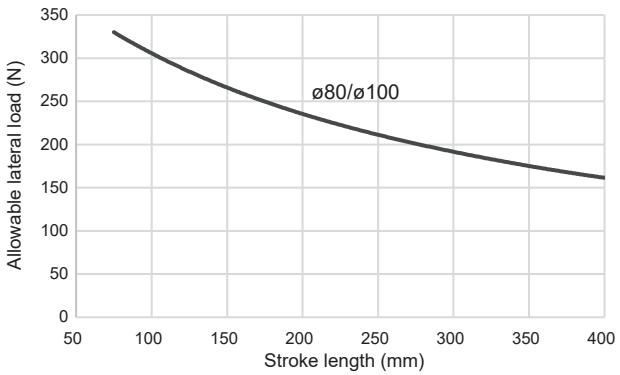

● When L = 100 mm

STL-M-8 to 16

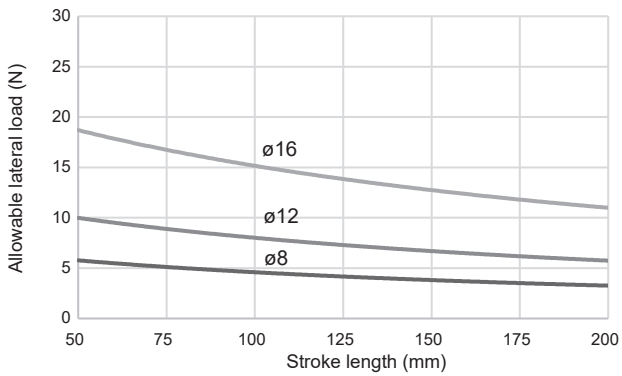

STL-M-20 to 63

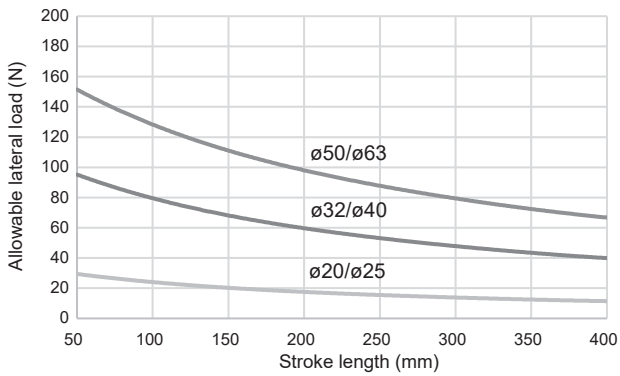

STL-M-80/100

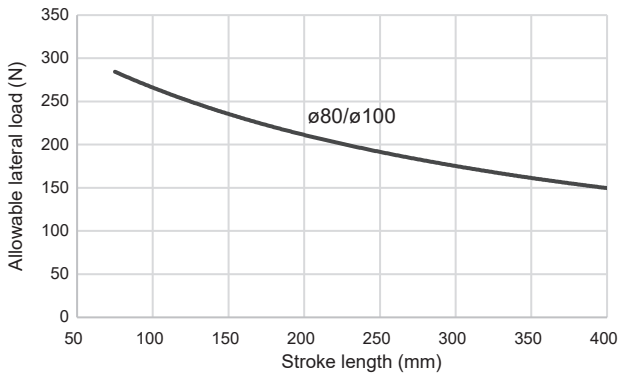

* 1: When operating the unit under a load, calculate the allowable lateral load using the two equations below.
[Corrosion-resistant] Catalog allowable lateral load value x 0.6
[Optional variations other than the above] Catalog allowable lateral load value x 0.9
2: When designing, be sure to consider the safety factor according to the operating conditions.

LCM
LCR
LCG
LCW
LCX
STM
STG
STS/STL
STR2
UCA2
ULK*
JSK/M2
JSG
JSC3/JSC4
USSD
UFCD
USC
UB
JSB3
LMB
LML
HCM
HCA
LBC
CAC4
UCAC2
CAC-N
UCAC-N
RCS2
RCC2
PCC
SHC
MCP
GLC
MFC
BBS
RRC
GRC
RV3*
NHS
HRL
LN
Hand
Chuk
MecHnd/Chuk
ShkAbs
FJ
FK
SpdContr
Ending

■ Long stroke

Allowable lateral load Ball bearing

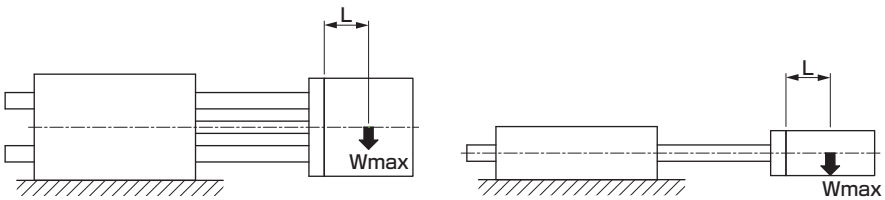

Wmax: Lateral load (N)
L: Load center of gravity position (mm)

●L=50mmFor

STL-B-8 to 16

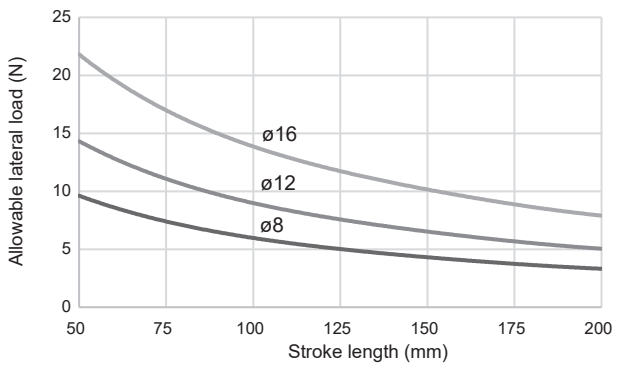

STL-B-20 to 63

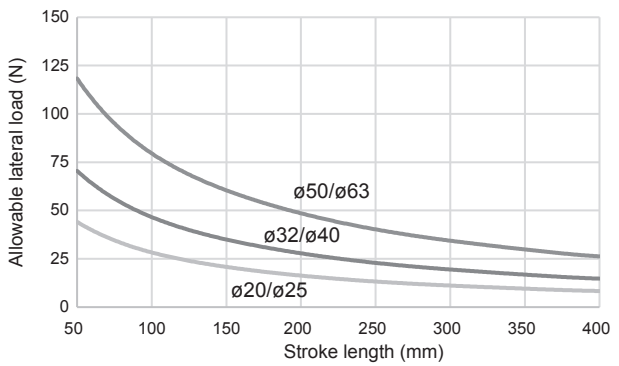

STL-B-80/100

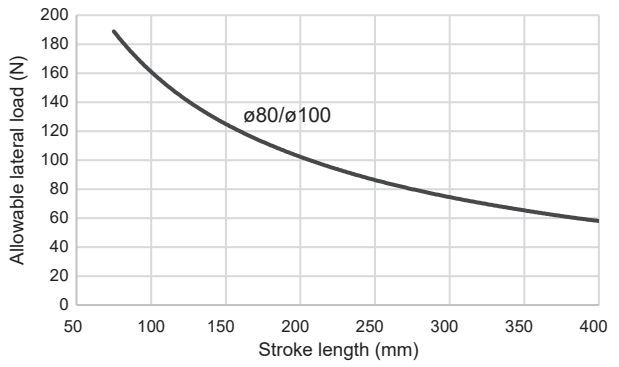

●For L=100mm

STL-B-8 to 16

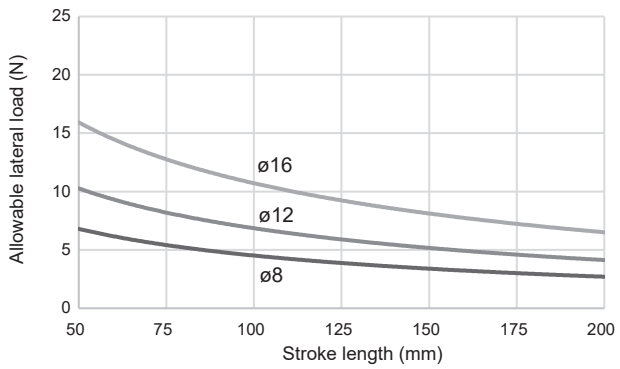

STL-B-20 to 63

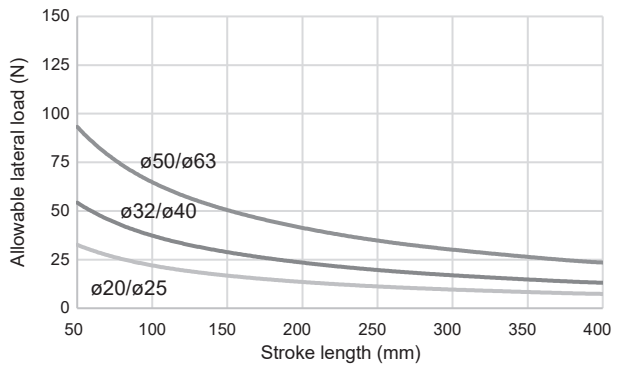

STL-B-80/100

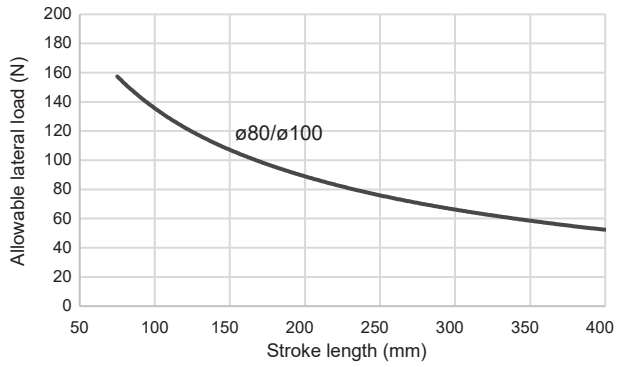

* 1: When operating the unit under a load, calculate the allowable lateral load using the two equations below.
[Corrosion-resistant] Catalog allowable lateral load value x 0.6
[Optional variations other than the above] Catalog allowable lateral load value x 0.9
2: When designing, be sure to consider the safety factor according to the operating conditions.

Safety Precautions

Be sure to read this section before use.

Refer to Intro Page 73 for general information of the cylinder, and to Intro Page 80 for general information of the cylinder switch.

Product-specific cautions: Guided cylinder STS/STL Series

Design/selection

1. Common

CAUTION

■ When using the metal bush bearing with a long stroke length at low speed, stick-slip may occur depending on load conditions. In this case, use the ball bearing.

2. Rubber-air cushioned STS/STL-M/B-*C

CAUTION

■ Note that, structurally, the stroke end position cannot be retained if air supply is cut off.
When detecting the stroke end by switch, set the switch position with pneumatic pressure applied, as otherwise the position may be out of the detection range.

3. Position locking STS/STL-M/BQ

WARNING

■ If pressure is supplied to port Ⓐ when both ports are not pressurized and the piston is locked, the lock may not be released or the piston rod may suddenly pop out just after the lock is released. This can be extremely hazardous. To release the lock mechanism, make sure to supply pressure to port Ⓑ. Check that load is not applied to the lock mechanism.

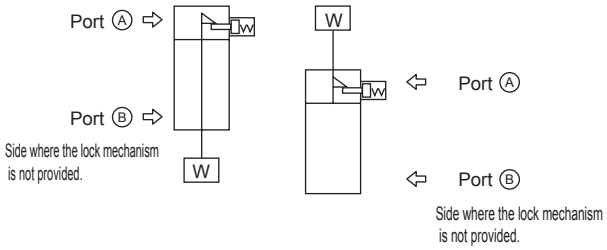

■ For usage where the drop rate is increased using the quick exhaust valve, the lock may not release normally because the cylinder body starts operating before the lock pin. For the position locking cylinder, do not use the quick exhaust valve.

■ Do not use 3-position valves.
Do not use the cylinder in combination with a 3-position (especially, closed center metal seal) valve. If the port at the side where the lock mechanism is provided is pressurized, the lock cannot be engaged. Even if it is locked once, the air leaked from the valve enters the cylinder, and the lock may be released after a certain period of time.

CAUTION

■ Cylinder load factor must be 50% or less.
If the load factor is high, the lock may not be released, or the lock section may be damaged.

■ If back pressure is applied to the locking mechanism, the lock may be released. Use a single valve, or an individual exhaust manifold.

■ Do not use multiple synchronized cylinders.
Do not use so that 1 workpiece is moved by synchronizing 2 or more position locking cylinders. Lock release may fail for one of the cylinders.

4. Fine speed (STS/STL-M/BF)

CAUTION

■ Use without lubrication.
Applying lubrication may cause changes in characteristics.

■ Assemble the speed controller near the cylinder.
When installed far from the cylinder, the speed becomes unstable. For the speed controller, SC-M3/M5, SC3W, SCD-M3/M5, and SC3U Series are recommended.

■ In general, the speed is stabler at higher air pressure and lower load factor.
Use at a 50% or less load factor.

■ Do not apply a lateral load to the cylinder.
Also install the sliding guide so that it is not twisted.
When the load or the resistance fluctuates, operation becomes unstable. With a large difference between static friction and kinematic friction of the guide, operation becomes unstable.

■ Avoid using this product where vibration is present.
The product will be adversely affected by vibration and operation will become unstable.

■ Stable speed control is achieved with a meter-out circuit.
When fine speed activation is performed with operating direction PUSH for the single rod cylinder, the popping out phenomenon occurs when operation starts if the load resistance is low. For countermeasures, use the ●or●circuit. Note that circuit ●is the most stable.

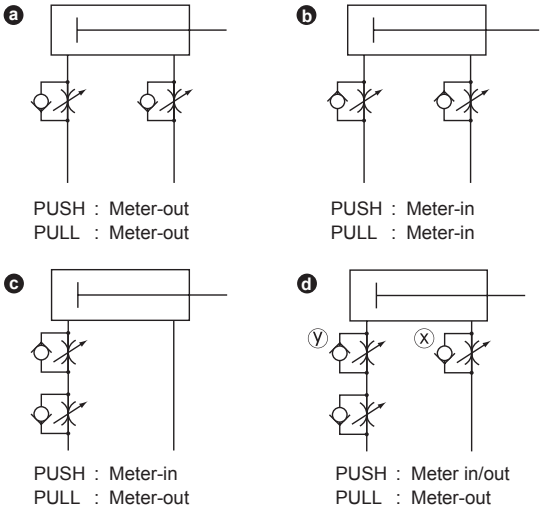

ⓓSpeed adjustment method for PUSH operation of circuit:
1. Set the speed with the speed controller x.
2. Restrict the speed with the speed controller y until there is no popping out.
3. Check the speed again.

(*1) When comparing ⓑ ⓒ ⓓ, the circuit ⓓ is the most stable.

(*2) For vertical mounting, combine the cylinder with a meter-out circuit, as it will fall under its own weight when a meter-in circuit is used.

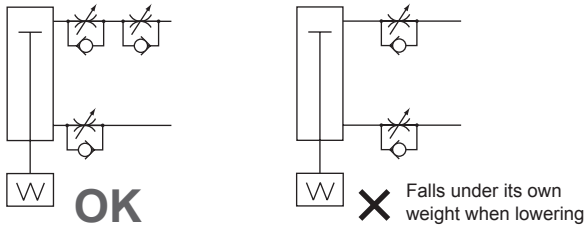

(*3) Use the circuit shown in the figure below for the serial connection of the speed controllers.

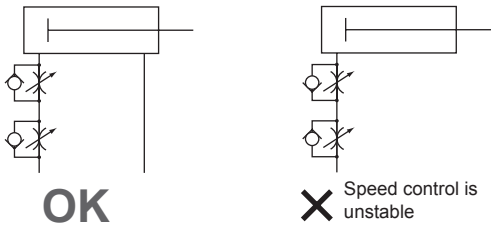

(Guidelines for pop-out generation)
Popping out occurs in the following cases.
· Thrust > Resistance

* Resistance: Thrust caused by residual pressure on the exhaust side (in the fine speed, suction pressure = residual pressure) + { When using horizontally : frictional force caused by load / When using vertically : load self-weight

4. Coolant proof STS/STL-MBG23

⚠CAUTION

■ Do not apply an eccentric load to the piston rod. The service life of the scraper or bearing could be shortened.

■ If the piston rod is not exposed to splattered coolant or water, use the G or G1 Series.
In the case that the G2 or G3 Series are not exposed to splattering of coolant or water, the lubrication of the piston rod will run out and the service life will be shortened.

■ Mount a speed controller on the cylinder.
Mount the speed controller on the cylinder.
Use each cylinder within the applicable working piston speed range.

5. Anti-spatter adherence STS/STL-MBG4

⚠CAUTION

■ The durability of this cylinder series is improved in comparison to standard cylinders when used in an atmosphere exposed to spatter. But durability may be shorter than the standard cylinder when used in other atmospheres.

LCM
LCR
LCG
LCW
LCX
STM
STG
STS/STL
STR2
UCA2
ULK*
JSK/M2
JSG
JSC3/JSC4
USSD
UFCD
USC
UB
JSB3
LMB
LML
HCM
HCA
LBC
CAC4
UCAC2
CAC-N
UCAC-N
RCS2
RCC2
PCC
SHC
MCP
GLC
MFC
BBS
RRC
GRC
RV3*
NHS
HRL
LN
Hand
Chuk
MecHnd/Chuk
ShkAbs
FJ
FK
SpdContr
Ending

Mounting, installation and adjustment

1. Common

⚠ CAUTION

■ Be sure to attach a speed controller during piping before use. The available fittings are as below.

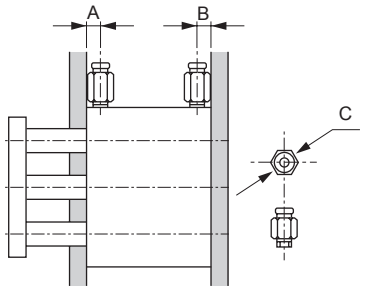

ø80 does not allow side piping such as shown in the figure above.

Item / Bore size (mm)	Port size	Port position A	Port position B	Applicable fittings	Fitting O.D. øC
ø 8	M5×0.8	11	6.5	SC3W-M5-4 SC3W-M5-6 GWS4-M5-S GWS4-M5 GWL4-M5 GWL6-M5 GWS6-M5	ø12 or less
ø12		7.5	7.5		
ø16		7.5	7.5		
ø20		12	8	SC3W-M5-4 SC3W-M5-6 GWS4-M5-S GWS4-M5 GWL4-M5 GWL6-M5	ø15 or less
ø25		12	9		
ø32	Rc1/8	14	9	SC3W-6-4/6/8 GWS4-6 GWS6-6 GWS8-6 GWL4-6 GWL6-6	ø15 or less
ø40		14.5	10		
ø50	Rc1/4	16	11	SC3W-8-6/8/10 GWS4-8 GWS6-8 GWS10-8 GWS12-8 GWL4 to 12-8	ø21 or less
ø63		17.5	16		
ø80	Rc3/8	25	26	SC3W-10-8/10/12 GWS6-10 GWS8-10 GWS10-10 GWL6 to 12-10	ø21 or less
ø100	Rc3/8	24	25.5(50)	SC3W-10-8/10/12 GWS6-10 GWS8-10 GWS10-10 GWL6 to 12-10	ø21 or less

■ Do not damage surface flatness by denting or scratching the body (tube) mounting surface or the end plate surface.
Make sure that the flatness of the mating surface where the end plate will be attached is 0.05 mm or below.

■ Be sure not to rotate the piston rod, as it may destabilize operation (due to misalignment).

■ When mounting the body with the through bolt, tighten with tightening torque as shown in the table below.

ø8/ø12	1.0 N·m
ø16	2.4 N·m
ø20/ø25	5.1 N·m
ø32/ø40	8.6 N·m
ø50/ø63	21.5 N·m
ø80/ø100	75.5 N·m

■ Allowable energy value
Use in the range below and to the left of the curve.
For use in the upper right range, provide an external shock absorber.

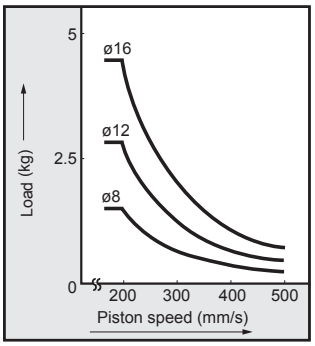

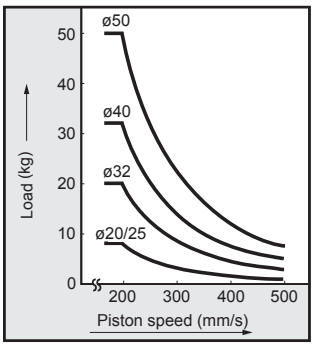

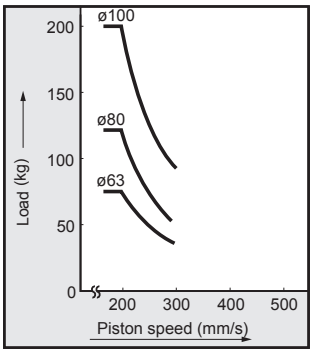

■ The cylinder switch may malfunction if there is a magnetic substance such as a metal plate installed adjacently. Check that a distance of 10 mm or more is provided from the surface of the cylinders.
(All bore sizes common)

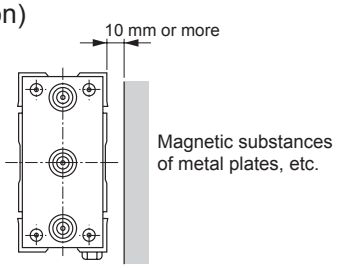

■ The cylinder switch may malfunction if cylinders are installed adjacently. Check that the following distances are provided between cylinders.
(All bore sizes common)

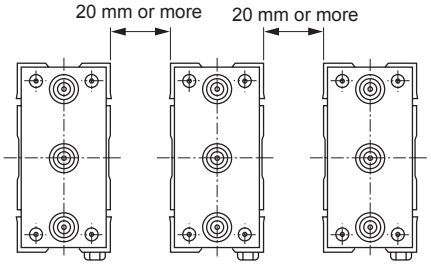

■ Do not rotate the piston rod, except when disassembling the product for maintenance, etc. Be sure not to rotate the piston rod, as misalignment may occur, destabilizing operation.

■ CKD's shock absorber is a repair part.
Replace it when the energy absorption performance has degrades or the operation is not smooth.

2. Position locking STS/STL-M/BQ

⚠ CAUTION

■ The lock mechanism functions at the stroke end, so that if the stopper is engaged during the stroke by the external stopper, the lock mechanism may not work and the piston could fall. When setting a load, make sure to check that the lock mechanism functions before installing the product.

■ Supply pressure equal to or higher than the min. working pressure to the port on the lock mechanism side.

■ When the piping at the side where the lock mechanism is provided is long and thin, or when the speed controller is far away from the cylinder port, note that it takes time to engage the lock. Note that clogging in the silencer mounted on the EXH port of the valve may cause the same result.

3. Fine speed STS/STL-M/BF

⚠ CAUTION

■ Perform adjustment such as centering so that a lateral load is not applied to the cylinder.
Adjust and install the sliding guide so that it is not twisted.
When the load or the resistance fluctuates, operation becomes unstable.
With a large difference between static friction and kinematic friction of the guide, operation becomes unstable.

Use/maintenance

1. Rubber-air cushioned STS/STL-M/B-*C

⚠ CAUTION

■ Do not rapidly discharge air from the cylinder after performing low speed operation outside the catalog specifications range. (Example: Removing piping or coupler, etc.)
Otherwise the rubber air cushion may fall. Be careful that the possibility of occurrence of this may increase especially when the air pressure is high.

2. Position locking STS/STL- M/B Q

⚠ WARNING

■ For safety purposes, prevent the load from falling under its own weight during maintenance.

■ When stopping the piston with an external buffer device (shock absorber, etc.), adjust it so that there is no bound. If the piston bounds at the stroke end, the sleeve and stopper piston will collide strongly and may result in damage of the locking mechanism. Inspect the piston once or twice a year to make sure there is no damage to the retainer caused by this phenomenon.

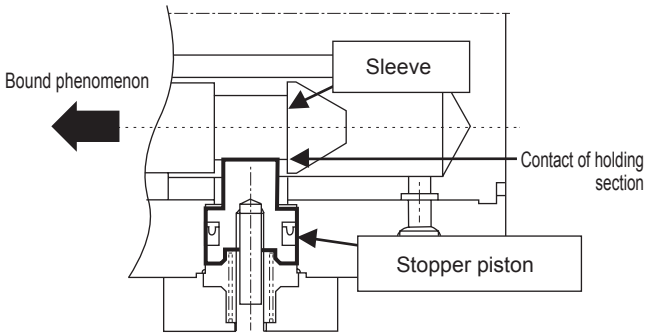

⚠ CAUTION

■ After the locking mechanism is manually operated, make sure to return the locking mechanism to the original state. Do not perform manual operation except for adjustment, as it is dangerous.

■ When mounting or adjusting the cylinder, release the lock.
If mounting work, etc., is done while the lock is engaged, the lock part may be damaged.

■ Use the speed controller with meter-out.
If the meter-in control is used, the lock may not be able to be released.

■ At the side where the lock mechanism is attached, be sure to use the cylinder from the stroke end.
If the cylinder piston does not reach the stroke end, the lock will not be engaged.

STR2

Twin rod cylinder

ø6/ø10/ø16/ø20/ø25/ø32

Combined functions

Overview

Guided twin rod cylinder for pick & place device.
The twin rod mechanism can improve the non-rotating accuracy and also double the thrust.

Features

High level of non-rotating accuracy

Two single rod cylinders fixed to the end plate in parallel.
High non-rotating accuracy, not requiring rotation-stop.

Bearing options

Metal bush bearing and ball bearing are available. Select an appropriate one for your application.

Space saving

Detection switch fits neatly into cylinder body. Simple design makes elegant use of space.

Ultra-compact is available.

The ultra-compact of ø6 bore size has been added to the series.
The series offers more choices than ever.

Piping ports can be installed on either side.

Piping ports can be installed on the right or left side.
Connect pipes according to the configuration.

Easy to install

A reamed hole for parallel pin has been provided.
Maintenance and removal are that much simpler.

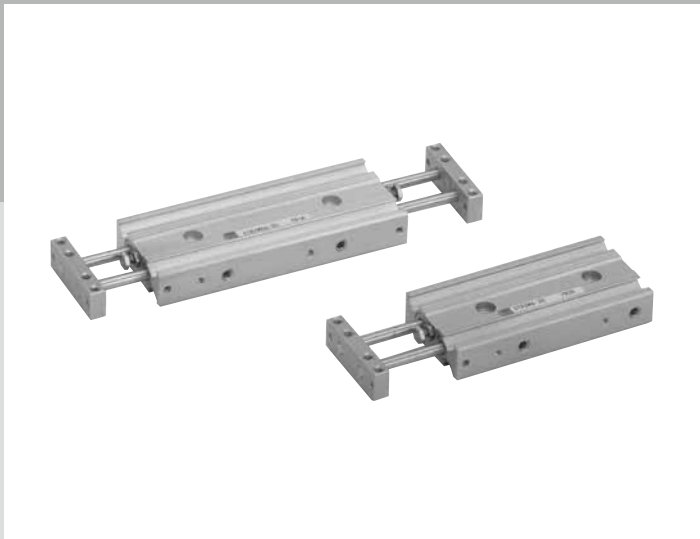

CONTENTS

Product introduction	576
Series variation	576
Variation and option combination selection table	578
● Double acting/single rod (STR2-$^{M}_{B}$)	580
● Double acting/position locking (STR2-$^{M}_{B}$Q)	592
● Double acting/low speed (STR2-$^{M}_{B}$O)	602
● Double acting/fine speed (STR2-$^{M}_{B}$F)	610
● Double acting/double rod (STR2-$^{M}_{B}$D)	612
STR2 Series with switch common dimensions	618
Selection guide	620
Technical data	624
⚠ Safety precautions	630

Series variation

Twin rod cylinder STR2 Series

Variation	Model No. JIS symbol	Bore size (mm)	Standard stroke length (mm)							
			10	20	30	40	50	60	70	
Double acting/ standard	STR2-$^{M}_{B}$	ø6/ø10	●	●	●	●	●			
		ø16/ø20/ø25/ø32	●	●	●	●	●	●	●	
Double acting/ position locking	STR2-$^{M}_{B}$Q 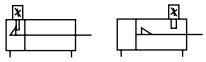	ø16/ø20/ø25/ø32	●	●	●	●	●	●	●	
Double acting/ low speed	STR2-$^{M}_{B}$O	ø6/ø10	●	●	●	●	●			
		ø16/ø20/ø25/ø32	●	●	●	●	●	●	●	
Double acting/fine speed	STR2-$^{M}_{B}$F	ø10	●	●	●	●	●			
		ø16/ø20/ø25/ø32	●	●	●	●	●	●	●	
Double acting/ double rod	STR2-$^{M}_{B}$D 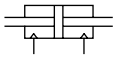	ø6/ø10	●	●	●	●	●			
		ø16/ø20/ø25/ø32	●	●	●	●	●	●	●	

Product introduction

CKD twin rod cylinder STR2-M and STR2-B Series have two single rod cylinders jointed in parallel.
This structure provides a high level of non-rotating accuracy and twice the thrust of that of one rod.
The series has six bore sizes from ø6 to ø32 as well as various options and variations.

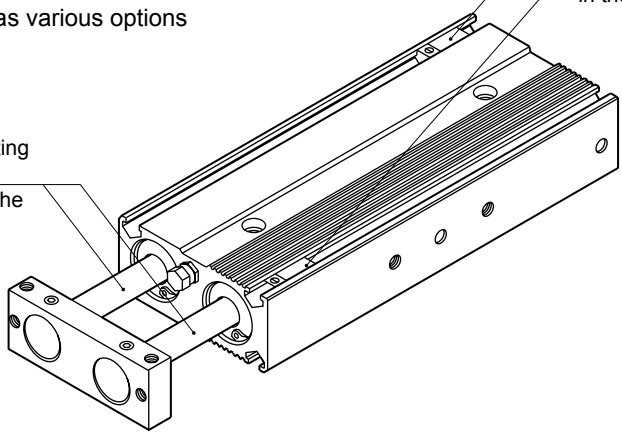

LCM
LCR
LCG
LCW
LCX
STM
STG
STS/STL
STR2
UCA2
ULK*
JSK/M2
JSG
JSC3/JSC4
USSD
UFCD
USC
UB
JSB3
LMB
LML
HCM
HCA
LBC
CAC4
UCAC2
CAC-N
UCAC-N
RCS2
RCC2
PCC
SHC
MCP
GLC
MFC
BBS
RRC
GRC
RV3*
NHS
HRL
LN
Hand
Chuk
MecHnd/Chuk
ShkAbs
FJ
FK
SpdContr
Ending

●: Standard, ◎: Option, ○: Made to order, ▒: Not available

Stroke length (mm)				Min. stroke length (mm)	Max. stroke length (mm)	Custom stroke length (per mm)	Available stroke length (mm)	Bearing		Option				Switch	Page
								Metal bush bearing	Ball bearing	End plate material: steel	Copper and PTFE free	Piping port position on the 180° opposite side	Rear piping		
	80	90	100					M	B	F	P6	O	R		
				5	50	1	100	●	●	◎	◎	◎	◎	◎	580
	●	●	●		100		200	●	●	◎	◎	◎	◎		
	●	●	●	5	100	-	-	●	●	◎	○	◎		◎	592
				5	50	1	100	●	●	◎		◎	○	◎	602
	●	●	●		100		200	●	●	◎		◎	○		
				5	50	1	100	●	●	◎		○	◎	◎	610
	●	●	●		100		200	●	●	◎		○	◎		
				5	50	-	-	●	●	◎	○	◎		◎	612
	●	●	●		100			●	●	◎	○	◎			

LCM
LCR
LCG
LCW
LCX
STM
STG
STS/STL
STR2
UCA2
ULK*
JSK/M2
JSG
JSC3/JSC4
USSD
UFCD
USC
UB
JSB3
LMB
LML
HCM
HCA
LBC
CAC4
UCAC2
CAC-N
UCAC-N
RCS2
RCC2
PCC
SHC
MCP
GLC
MFC
BBS
RRC
GRC
RV3*
NHS
HRL
LN
Hand
Chuk
MecHnd/Chuk
ShkAbs
FJ
FK
SpdContr
Ending

Variation and option selection table (metal bush bearing)

● : Standard
◎ : Option
○ : Available (made-to-order product)
△ : Available depending on conditions (Contact CKD.)
× : Not available

Category		Category	Variation					Port thread		Option						
			Double acting basic (metal bush)	Double rod	Position locking	Low speed	Fine speed	NPT1/8	G1/8	Steel plate specified	Copper and PTFE free	Clean-room specifications (exhaust port)	Clean-room specifications (vacuum treatment)	Piping port position on the 180° opposite side	Rear piping	
		Code	M	D	Q	O	F	N	G	F	P6	P72	P73	O	R	
Variation	Double acting basic (metal bush)	M		◎	◎	◎	◎	○	○	◎	◎	○	○	◎	◎	
Variation	Double rod	D			○	○	○	○	○	◎	○	△	△	◎	×	
Variation	Position locking	Q				×	×	○	○	◎	○	△	△	◎	×	
Variation	Low speed	O					×	○	○	◎	×	○	○	◎	○	
Variation	Fine speed	F						○	○	◎	×	○	○	○	◎	
Port thread	NPT	N							×	○	○	○	○	○	○	
Port thread	G	G								○	○	○	○	○	○	
Option	End plate material: steel	F									◎	○	○	○	○	
Option	Copper and PTFE free	P6										*1	*1	○	○	
Option	Clean-room specifications (exhaust port)	P72											×	○	×	
Option	Clean-room specifications (vacuum treatment)	P73												○	×	
Option	Piping port position on the 180° opposite side	O													×	
Option	Rear piping	R														
Option																
Accy.	Cylinder switch	Listed separately	◎	◎	◎	◎	◎	○	○	◎	◎	◎	◎	◎	◎	

*1: Refer to "Components for Clean Room Specifications" No. CB-033SA for the clean room specifications (P72, P73, P52, P53).

[Example of model No.]

STR2 - (M D F) - 16 ( ) - 50 - K0H - D - (F O)

- STR2: Model No.
- (M D F): Variation — * List in order from left to right in the above table.
- 16: A Bore size
- ( ): B Port thread
- 50: C Stroke length
- K0H: D Switch model No.
- D: E Switch quantity
- (F O): F Option — * List in order from left to right in the above table.

Model: Twin rod cylinder

- ● Variations : Metal bush bearing, double rod, fine speed
- Ⓐ Bore size : ø16 mm
- Ⓑ Port thread : Rc thread
- Ⓒ Stroke length: 50 mm
- Ⓓ Switch model No. : Reed KOH switch, lead wire 1 m
- Ⓔ Switch quantity : 2
- Ⓕ Option : End plate material (steel), piping port position on the 180° opposite side

Variation and option combination selection table (ball bearing)

● : Standard
◎ : Option
○ : Available (made-to-order product)
△ : Available depending on conditions (Contact CKD.)
× : Not available

Category		Category	Variation					Port thread		Option						
			Double acting basic (bearing bush type)	Double rod	Position locking	Low speed	Fine speed	NPT1/8	G1/8	Steel plate specified	Copper and PTFE free	Clean-room specifications (exhaust port)	Clean-room specifications (vacuum treatment)	Piping port on the 180° opposite side	Rear piping	
		Code	B	D	Q	O	F	N	G	F	P6	P72	P73	O	R	
Variation	Double acting basic (bearing bush type)	B		◎	◎	◎	◎	○	○	◎	*2	◎	◎	◎	◎	
	Double rod	D			○	○	○	○	○	◎	*2	△	△	◎	×	
	Position locking	Q				×	×	○	○	◎	*2	△	△	◎	×	
	Low speed	O					×	○	○	◎	×	○	○	◎	○	
	Fine speed	F						○	○	◎	×	○	○	○	◎	
Port thread	NPT	N							×	○	*2	○	○	○	○	
	G	G								○	*2	○	○	○	○	
Option	End plate material: steel	F									*2	○	○	○	○	
	Copper and PTFE free	P6										*1	*1	*2	*2	
	Clean-room specifications (exhaust port)	P72											×	○	×	
	Clean-room specifications (vacuum treatment)	P73												○	×	
	Piping port position on the 180° opposite side	O													×	
	Rear piping	R														
Accy.	Cylinder switch	Listed separately	◎	◎	◎	◎	◎	○	○	◎	◎	◎	◎	◎	◎	

*1: Refer to "Components for Clean Room Specifications" No. CB-033SA for the clean room specifications (P72, P73, P52, P53).
*2: Copper and PTFE free. (P6 code is not required.)

[Example of model No.]

STR2 - B D Q - 10 ( ) - 30 - K2H - D - O P72

- STR2: Model No.
- B D Q: Variation — * List in order from left to right in the above table.
- 10: Ⓐ Bore size
- ( ): Ⓑ Port thread
- 30: Ⓒ Stroke length
- K2H: Ⓓ Switch model No.
- D: Ⓔ Switch quantity
- O P72: Ⓕ Option — * List in order from left to right in the above table.

Model: Twin rod cylinder
● Variations : Ball bearing, double rod, position locking
Ⓐ Bore size : ø10 mm
Ⓑ Port thread : Rc thread
Ⓒ Stroke length : 30 mm
Ⓓ Switch model No. : Proximity K2H switch Lead wire 1 m
Ⓔ Switch quantity : 2
Ⓕ Option : Piping port position on the 180° opposite side, clean-room specifications (exhaust port)

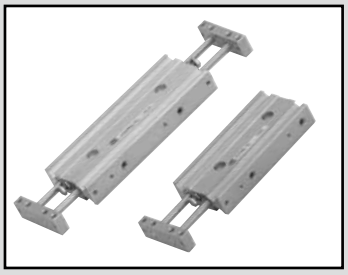

Twin rod cylinder Double acting/standard

STR2-$^{M}_{B}$ Series

● Bore size: ø6/ø10/ø16/ø20/ø25/ø32

JIS symbol

RoHS CAD

Specifications

Item		STR2-M (metal bush bearing) STR2-B (ball bearing)					
Bore size mm		ø6	ø10	ø16	ø20	ø25	ø32
Actuation		Double acting					
Working fluid		Compressed air					
Max. working pressure MPa		0.7 (≈100 psi, 7 bar)					
Min. working pressure MPa		0.2 (≈29 psi, 2 bar)	0.15 (≈22 psi, 1.5 bar)	0.1 (≈15 psi, 1 bar)			
Proof pressure MPa		1.05 (≈150 psi, 10.5 bar)					
Ambient temperature °C		-10 (14°F) to 60 (140°F) (no freezing)					
Port size		M5					Rc1/8
Stroke tolerance mm		+2.0 0					
Adjustable stroke range mm		0 to -5					
Working piston speed mm/s		50 to 500					
Non-rotating accuracy (reference value)	STR2-M	±0.4°	±0.3°			±0.2°	
	STR2-B	±0.2°	±0.1°			±0.3°	
Piston rod	STR2-M	Metal bush bearing					
Bearing	STR2-B	Ball bearing					
Cushion		Rubber cushion					
Lubrication		Not required (use turbine oil class 1 ISO VG32 if necessary for lubrication)					
Max absorbed energy J	PUSH	0.008	0.061	0.181	0.303	0.68	1.3
	PULL	0.059	0.083	0.083	0.127	0.237	0.311

Stroke length

Bore size	Stroke length (mm)	Max. stroke length (mm)	Min. stroke length (mm)	Available stroke length (mm)	Min. stroke with switch (mm)
ø6	10, 20, 30, 40, 50	50	5	100	10
ø10					
ø16	10, 20, 30, 40, 50 60, 70, 80, 90, 100	100 *1		200	
ø20					
ø25					
ø32					

*1 : In the case of rear piping:
· ø16: 70
· ø20/ø25: 60
· ø32: 50

*2 : Custom stroke length
Available in 1 mm increments.
However, the total length is the same as that of the next longer standard stroke length.

Theoretical thrust table

(Unit: N)

Bore size (mm)	Operating direction	Working pressure MPa							
		0.1	0.15	0.2	0.3	0.4	0.5	0.6	0.7
ø6	Push	-	-	11.3	17.0	22.6	28.3	33.9	39.6
	Pull	-	-	6.28	9.42	12.6	15.7	18.8	22.0
ø10	Push	-	23.6	31.4	47.1	62.8	78.5	94.2	1.10×10^{2}
	Pull	-	15.1	20.1	30.2	40.2	50.3	60.3	70.4
ø16	Push	40.2	60.3	80.4	1.21×10^{2}	1.61×10^{2}	2.01×10^{2}	2.41×10^{2}	2.81×10^{2}
	Pull	24.5	36.8	49.0	73.5	98.0	1.23×10^{2}	1.47×10^{2}	1.72×10^{2}
ø20	Push	62.8	94.2	1.26×10^{2}	1.88×10^{2}	2.51×10^{2}	3.14×10^{2}	3.77×10^{2}	4.40×10^{2}
	Pull	40.2	60.3	80.4	1.21×10^{2}	1.61×10^{2}	2.01×10^{2}	2.41×10^{2}	2.81×10^{2}
ø25	Push	98.2	1.47×10^{2}	1.96×10^{2}	2.95×10^{2}	3.93×10^{2}	4.91×10^{2}	5.89×10^{2}	6.87×10^{2}
	Pull	67.4	1.01×10^{2}	1.35×10^{2}	2.02×10^{2}	2.70×10^{2}	3.37×10^{2}	4.04×10^{2}	4.72×10^{2}
ø32	Push	1.61×10^{2}	2.41×10^{2}	3.22×10^{2}	4.83×10^{2}	6.43×10^{2}	8.04×10^{2}	9.65×10^{2}	1.13×10^{3}
	Pull	1.21×10^{2}	1.81×10^{2}	2.41×10^{2}	3.62×10^{2}	4.83×10^{2}	6.03×10^{2}	7.24×10^{2}	8.44×10^{2}

LCM
LCR
LCG
LCW
LCX
STM
STG
STS/STL
STR2
UCA2
ULK*
JSK/M2
JSG
JSC3/JSC4
USSD
UFCD
USC
UB
JSB3
LMB
LML
HCM
HCA
LBC
CAC4
UCAC2
CAC-N
UCAC-N
RCS2
RCC2
PCC
SHC
MCP
GLC
MFC
BBS
RRC
GRC
RV3*
NHS
HRL
LN
Hand
Chuk
MecHnd/Chuk
ShkAbs
FJ
FK
SpdContr
Ending

Switch specifications

● 1-color/2-color display

Item	Proximity 2-wire		Proximity 3-wire			Reed 2-wire			
	K2H/K2V	K2YH/K2YV	K3H/K3V	K3PH/K3PV (Made to order)	K3YH/K3YV	K0H/K0V		K5H/K5V	
Applications	Dedicated for programmable controller		For programmable controller, relay			For programmable controller, relay		For programmable controller, relay, IC circuit (no indicator lamp), serial connection	
Output method	-		NPN output	PNP output	NPN output	-			
Power supply voltage	-		10 to 28 VDC			-			
Load voltage	10 to 30 VDC		30 VDC or less			12 VDC/24 VDC	110 VAC	5/12/24 VDC	110 VAC
Load current	5 to 20 mA (*3)		50 mA or less			5 to 50 mA	7 to 20 mA	50 mA or less	20 mA or less
Indicator lamp	LED (Lit when ON)	Red/green LED (Lit when ON)	LED (Lit when ON)	Yellow LED (Lit when ON)	Red/green LED (Lit when ON)	LED (Lit when ON)		-	
Leakage current	1 mA or less		10 μA or less			0 mA			
Weight g	1 m:18 3 m:49 5 m:80	1 m:31 3 m:85 5 m:139	1 m:18 3 m:49 5 m:80		1 m:31 3 m:85 5 m:139	1 m:18 3 m:49 5 m:80			

*1 : Refer to Ending Page 1 for detailed switch specifications and dimensions.
*2 : Switches other than the above models, such as switches with connectors, are also available. Refer to Ending Page 1.
*3 : The max. load current is 20 mA at 25°C. The current is lower than 20 mA if the operating ambient temperature around the switch is higher than 25˚C. (5 to 10 mA at 60°C)

Cylinder weight

Unit: g

Bore size	Product weight at 0 mm stroke		Additional weight per S = 10 mm
	STR2-M	STR2-B	
ø6	60	64	10
ø10	140	155	14
ø16	240	300	20
ø20	340	405	40
ø25	580	610	52
ø32	1300	1150	83

(Example) Product weight
STR2-M-6-10-K2H-D

● Product weight for 0 mm stroke length ... 60 g

● Additional weight for stroke length 10 mm ... 10 g x 1 = 10 g

● Weight of 2 cylinder switches ... 18 g x 2 = 36 g

● Product weight ... 60 g + 10 g + 36 g = 106 g

Clean-room specifications

(Catalog No. CB-033SA)

● Anti-dust generation structure for use in cleanrooms

STR2-B-·····-P7*

STR2-B-·····-P5*

Specifications for rechargeable battery

(Catalog No. CC-1226A)

● Design compatible with rechargeable battery manufacturing process.

STR2-M/B-·····-P4*

LCM
LCR
LCG
LCW
LCX
STM
STG
STS/STL
STR2
UCA2
ULK*
JSK/M2
JSG
JSC3/JSC4
USSD
UFCD
USC
UB
JSB3
LMB
LML
HCM
HCA
LBC
CAC4
UCAC2
CAC-N
UCAC-N
RCS2
RCC2
PCC
SHC
MCP
GLC
MFC
BBS
RRC
GRC
RV3*
NHS
HRL
LN
Hand
Chuk
MecHnd/Chuk
ShkAbs
FJ
FK
SpdContr
Ending

How to order

Without switch (built-in magnet for switch)

STR2 - M - 16 ◯ - 30 ——— F

With switch (built-in magnet for switch)

STR2 - M - 16 ◯ - 30 - K0H - R - F

Model No.

Ⓐ Bearing

Ⓑ Bore size

Ⓒ Port thread

Ⓓ Stroke length *1

■ The custom stroke length is available in 1 mm increments.

Ⓔ Switch model No. *2

Ⓕ Switch quantity

Ⓖ Option *3 *4

Code	Description
Ⓐ Bearing	
M	Metal bush bearing
B	Ball bearing

Ⓑ Bore size (mm)	
6	ø6
10	ø10
16	ø16
20	ø20
25	ø25
32	ø32

Ⓒ Port thread	
Blank	Rc thread
NN	NPT thread (ø32 only) (made-to-order product)
GN	G thread (ø32 only) (made-to-order product) *5

Ⓓ Stroke length (mm)

Bore size	Stroke length	Available stroke length	Custom stroke length
ø6	**5 to 50**	**100**	**In 1 mm increments**
ø10	**5 to 50**	**100**	
ø16	**5 to 100**	**200**	
ø20	**5 to 100**	**200**	
ø25	**5 to 100**	**200**	
ø32	**5 to 100**	**200**	

Ⓔ Switch model No.

Axial lead wire	Radial lead wire	Contact	Voltage AC	Voltage DC	Indicator	Lead wire
K0H*	**K0V***	Reed	●	●	1-color display	2-wire
K5H*	**K5V***		●	●	no indicator lamp	
K2H*	**K2V***	Proximity		●	1-color display	2-wire
K3H*	**K3V***			●		3-wire
K3PH*	**K3PV***			●	1-color display (made to order)	3-wire
K2YH*	**K2YV***			●	2-color display	2-wire
K3YH*	**K3YV***			●		3-wire

*** Lead wire length**	
Blank	1 m (standard)
3	3 m (option)
5	5 m (option)

Ⓕ Switch quantity	
R	1 on rod side
H	1 on head side
D	2

Ⓖ Option	
F	End plate material: steel
P6	Copper and PTFE free
O	Piping port position on the 180° opposite side
R	Rear piping

⚠ Precautions for model No. selection

*1 : The max stroke length of rear piping "R" is:
- · ø6/10 : 50 Stroke
- · ø16 : 70 Stroke
- · ø20/25 : 60 Stroke
- · ø32 : 50 Stroke

*2 : STR2-B-6 and 10 are not compatible with a reed switch.
*3 : The ball bearing is copper and PTFE free "P6" standard.
*4 : The piping port positions for "O" are as shown in the figure below.

Piping port positions for standard (blank)

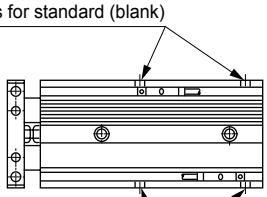

Piping port position on the 180° opposite side (Code: 0) piping port

*5 : In the case of G thread, ports on the opposite side (option "O") are not available. Rather than plug sealing, they are simply not provided.
(The standard ports are not provided in the case of option "O".)

[Example of model No.]

STR2-M-16-30-K0H-R-F

Model: Twin rod cylinder, standard

- Ⓐ Bearing : Metal bush bearing
- Ⓑ Bore size : ø16 mm
- Ⓒ Port thread : Rc thread
- Ⓓ Stroke length : 30 mm
- Ⓔ Switch model No.: Reed K0H switch
- Ⓕ Switch quantity : 1 on rod side
- Ⓖ Option : End plate material: steel

How to order switch

SW - K0H*

Switch model No. (Item Ⓔ above)

MEMO

LCM
LCR
LCG
LCW
LCX
STM
STG
STS/STL
STR2
UCA2
ULK*
JSK/M2
JSG
JSC3/JSC4
USSD
UFCD
USC
UB
JSB3
LMB
LML
HCM
HCA
LBC
CAC4
UCAC2
CAC-N
UCAC-N
RCS2
RCC2
PCC
SHC
MCP
GLC
MFC
BBS
RRC
GRC
RV3*
NHS
HRL
LN
Hand
Chuk
MecHnd/Chuk
ShkAbs
FJ
FK
SpdContr
Ending

Internal structure and parts list (metal bush bearing ø6/ø10)

- Standard
  STR2-M
- End plate material: steel
  STR2-M-F
- Copper and PTFE free
  STR2-M-P6
- Piping port position on the 180° opposite side
  STR2-M ··· -O

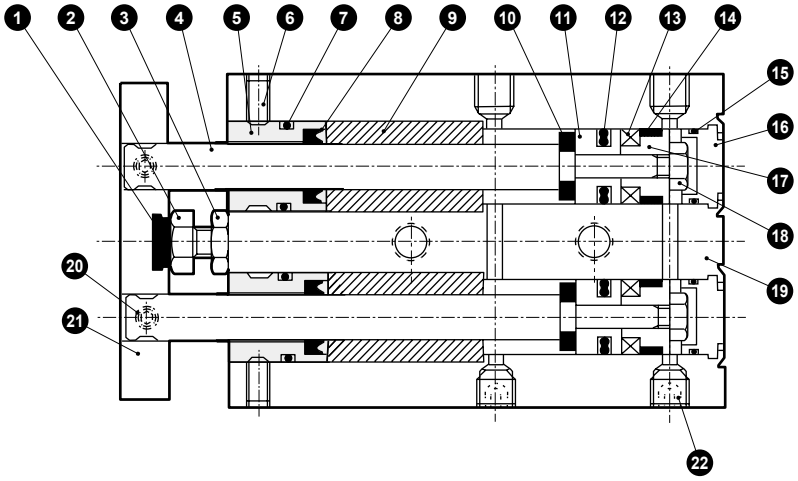

No.	Part name	Material	Remarks	No.	Part name	Material	Remarks
1	Cushion rubber (H)	Urethane rubber		12	Piston packing	Nitrile rubber	
2	Hexagon head bolt	Stainless steel		13	Magnet	Plastic	
3	Hexagon nut	Stainless steel		14	Wear ring	Acetal resin	
4	Piston rod	Stainless steel		15	O-ring	Nitrile rubber	
5	Housing	Stainless steel		16	Cap	Aluminum alloy	Chromate
6	Hexagon socket set screw	Stainless steel		17	Spacer	Aluminum alloy	Chromate
7	O-ring	Nitrile rubber		18	Hexagon nut	Steel	Zinc chromate
8	Rod packing	Nitrile rubber		19	Cylinder body	Aluminum alloy	Hard alumite
9	Bush	Aluminum alloy		20	Hexagon socket set screw	Stainless steel	
10	Cushion rubber (R)	Urethane rubber		21	End plate *1	Aluminum alloy	Alumite
11	Piston	Aluminum alloy	Chromate	22	Hexagon socket set screw	Stainless steel	

*1 : The steel end plate is zinc chromate.

Repair parts list

STR2-M (standard), STR2-M-F (end plate material: steel), STR2-M-P6 (copper and PTFE free)

Bore size (mm)	Kit No.	Repair parts No.
ø6	STR2-6K	1 7 8 10 12 14
ø10	STR2-10K	

Note : Specify the kit No. when placing an order.

Internal structure and parts list (metal bush bearing ø16/ø20/ø25/ø32)

- Standard
  STR2-M
- End plate material: steel
  STR2-M-F
- Copper and PTFE free
  STR2-M-P6
- Piping port position on the 180° opposite side
  STR2-M ··· -O

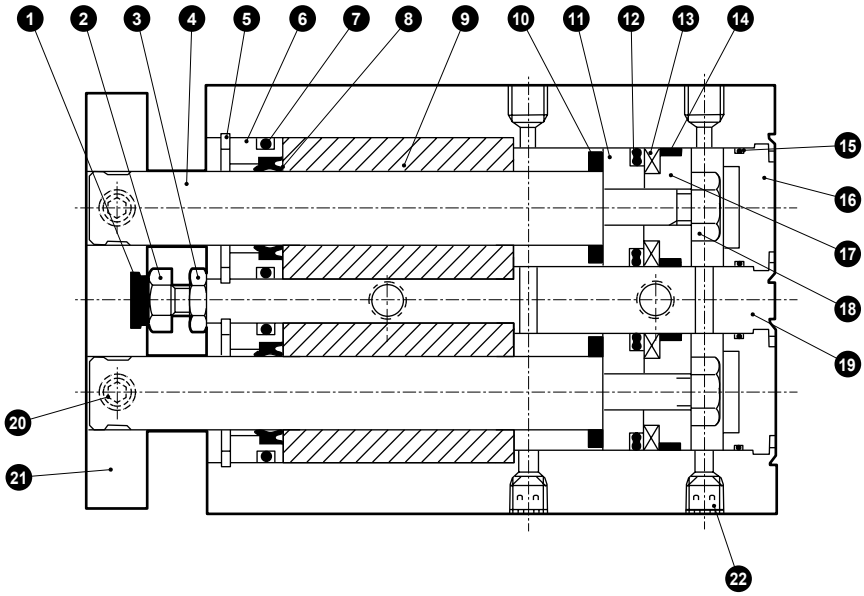

No.	Part name	Material	Remarks	No.	Part name	Material	Remarks
1	Cushion rubber (H)	Urethane rubber		12	Piston packing	Nitrile rubber	
2	Hexagon head bolt	Stainless steel		13	Magnet	Plastic	
3	Hexagon nut	Stainless steel		14	Wear ring	Acetal resin	
4	Piston rod	Stainless steel (ø16, ø20) Steel (ø25, ø32)	Industrial chrome plating	15	O-ring	Nitrile rubber	
				16	Cap	Aluminum alloy	Chromate
5	Snap ring for hole	Stainless steel		17	Spacer	Aluminum alloy	Chromate
6	Housing	Aluminum alloy	Chromate	18	Hexagon nut	Steel	Zinc chromate
7	O-ring	Nitrile rubber		19	Cylinder body	Aluminum alloy	Hard alumite
8	Rod packing	Nitrile rubber		20	Hexagon socket set screw	Stainless steel	
9	Bush	Aluminum alloy		21	End plate *1	Aluminum alloy	Alumite
10	Cushion rubber (R)	Urethane rubber		22	Hexagon socket set screw	Stainless steel	
11	Piston	Aluminum alloy	Chromate				

*1 : The steel end plate is zinc chromate.

Repair parts list

STR2-M (standard), STR2-M-F (end plate material: steel), STR2-M-P6 (copper and PTFE free)

Bore size (mm)	Kit No.	Repair parts No.
ø16	STR2-16K	❶ ❼ ❽ ❿ ⓬ ⓮
ø20	STR2-20K	
ø25	STR2-25K	
ø32	STR2-32K	

Note : Specify the kit No. when placing an order.

LCM
LCR
LCG
LCW
LCX
STM
STG
STS/STL
STR2
UCA2
ULK*
JSK/M2
JSG
JSC3/JSC4
USSD
UFCD
USC
UB
JSB3
LMB
LML
HCM
HCA
LBC
CAC4
UCAC2
CAC-N
UCAC-N
RCS2
RCC2
PCC
SHC
MCP
GLC
MFC
BBS
RRC
GRC
RV3*
NHS
HRL
LN
Hand
Chuk
MecHnd/Chuk
ShkAbs
FJ
FK
SpdContr
Ending

Internal structure and parts list (metal bush bearing ø6/ø10/ø16/ø20/ø25/ø32)

● Rear piping

STR2-M-R

ø6, ø10

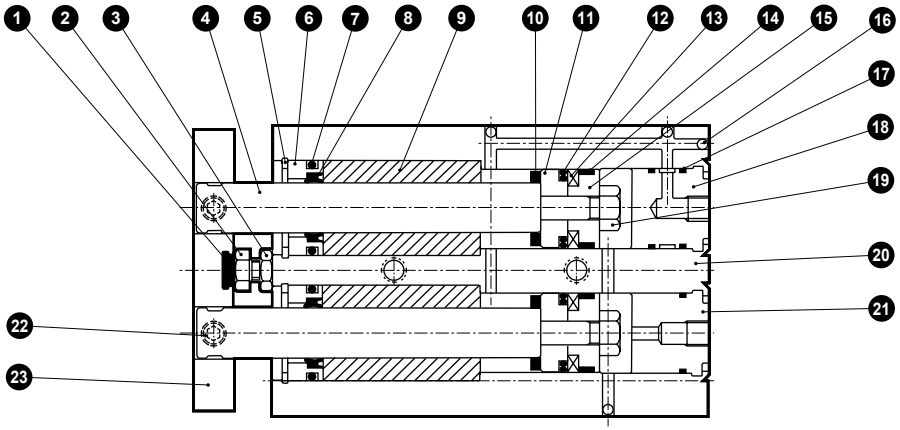

ø16 to ø32

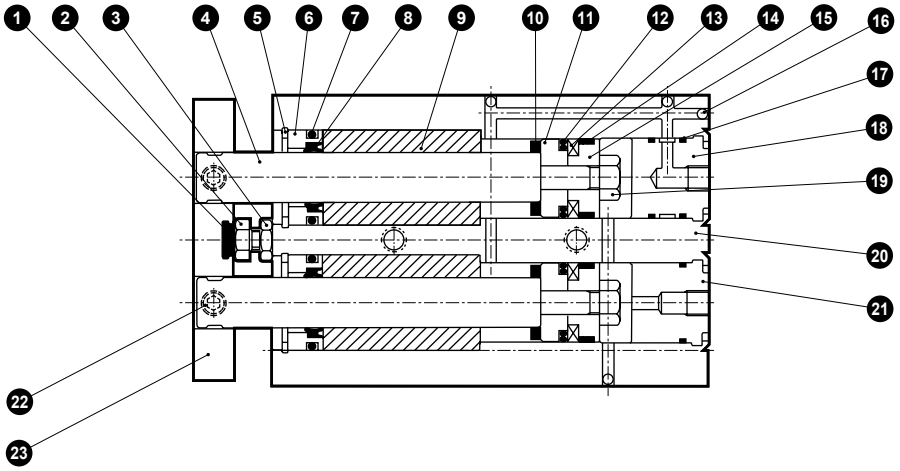

No.	Part name	Material	Remarks	No.	Part name	Material	Remarks
1	Cushion rubber (H)	Urethane rubber		12	Piston packing	Nitrile rubber	
2	Hexagon head bolt	Stainless steel		13	Magnet	Plastic	
3	Hexagon nut	Stainless steel		14	Wear ring	Acetal resin	
4	Piston rod	Stainless steel (ø6 to ø20) Steel (ø25, ø32)	Industrial chrome plating (ø16 to ø32)	15	Spacer	Aluminum alloy	Chromate
				16	Steel ball	Steel	
5	Snap ring for hole	Stainless steel		17	O-ring	Nitrile rubber	
6	Housing	Stainless steel (ø6, ø10) Aluminum alloy (ø16 to ø32)	Chromate	18	Cap (A)	Aluminum alloy	Chromate
				19	Hexagon nut	Steel	Zinc chromate
7	O-ring	Nitrile rubber		20	Cylinder body	Aluminum alloy	Hard alumite
8	Rod packing	Nitrile rubber		21	Cap (B)	Aluminum alloy	Chromate
9	Bush	Aluminum alloy		22	Hexagon socket set screw	Stainless steel	
10	Cushion rubber (R)	Urethane rubber		23	End plate	Aluminum alloy	Alumite
11	Piston	Aluminum alloy	Chromate				

*: The steel end plate is zinc chromate.

Repair parts list

STR2-M-R (rear piping)

Bore size (mm)	Kit No.	Repair parts No.
ø 6	STR2-6K	
ø10	STR2-10K	
ø16	STR2-16K	1 7 8
ø20	STR2-20K	10 12 14
ø25	STR2-25K	
ø32	STR2-32K	

Note : Specify the kit No. when placing an order.

Internal structure and parts list (ball bearing ø6/ø10)

● Standard
STR2-B

● End plate material: steel
STR2-B-F

● Piping port position on the 180° opposite side
STR2-B ··· -O

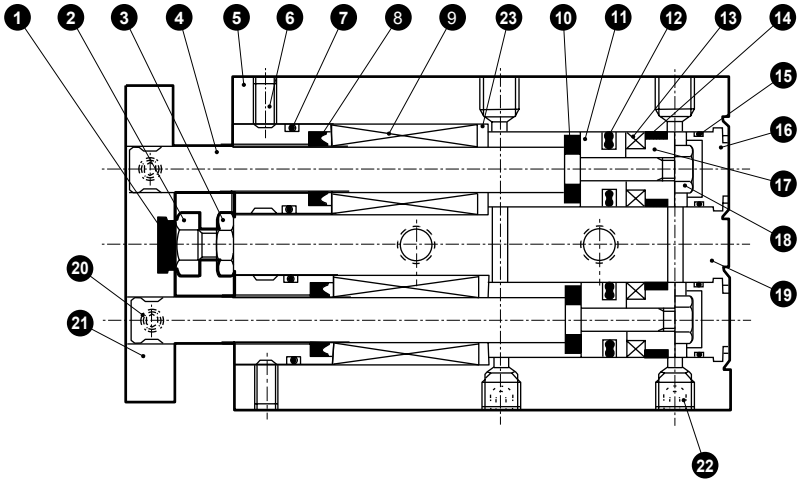

No.	Part name	Material	Remarks	No.	Part name	Material	Remarks
1	Cushion rubber (H)	Urethane rubber		13	Magnet	Plastic	
2	Hexagon head bolt	Stainless steel		14	Wear ring	Acetal resin	
3	Hexagon nut	Stainless steel		15	O-ring	Nitrile rubber	
4	Piston rod	Steel	Industrial chrome plating	16	Cap	Aluminum alloy	Chromate
5	Housing	Stainless steel		17	Spacer	Aluminum alloy	Chromate
6	Hexagon socket set screw	Stainless steel		18	Hexagon nut	Steel	Zinc chromate
7	O-ring	Nitrile rubber		19	Cylinder body	Aluminum alloy	Hard alumite
8	Rod packing	Nitrile rubber		20	Hexagon socket set screw	Stainless steel	
9	Bearing			21	End plate *1	Aluminum alloy	Alumite
10	Cushion rubber (R)	Urethane rubber		22	Hexagon socket set screw	Stainless steel	
11	Piston	Aluminum alloy	Chromate	23	Spacer	Aluminum alloy	Chromate
12	Piston packing	Nitrile rubber					

*1 : The steel end plate is zinc chromate.

Repair parts list

STR2-B (standard), STR2-B-F (end plate material: steel)

Bore size (mm)	Kit No.	Repair parts No.
ø6	STR2-6K	1 7 8 10 12 14
ø10	STR2-10K	

Note : Specify the kit No. when placing an order.

LCM
LCR
LCG
LCW
LCX
STM
STG
STS/STL
STR2
UCA2
ULK*
JSK/M2
JSG
JSC3/JSC4
USSD
UFCD
USC
UB
JSB3
LMB
LML
HCM
HCA
LBC
CAC4
UCAC2
CAC-N
UCAC-N
RCS2
RCC2
PCC
SHC
MCP
GLC
MFC
BBS
RRC
GRC
RV3*
NHS
HRL
LN
Hand
Chuk
MecHnd/Chuk
ShkAbs
FJ
FK
SpdContr
Ending

Internal structure and parts list (ball bearing ø16/ø20/ø25/ø32)

● Standard
STR2-B

● End plate material: steel
STR2-B-F

● Piping port position on the 180° opposite side
STR2-B ··· -O

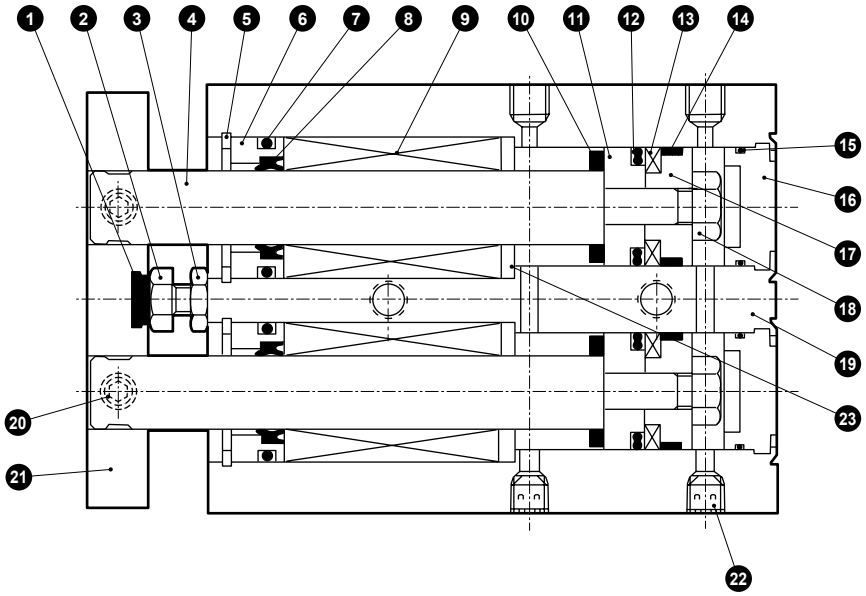

No.	Part name	Material	Remarks	No.	Part name	Material	Remarks
1	Cushion rubber (H)	Urethane rubber		13	Magnet	Plastic	
2	Hexagon head bolt	Stainless steel		14	Wear ring	Acetal resin	
3	Hexagon nut	Stainless steel		15	O-ring	Nitrile rubber	
4	Piston rod	Steel	Industrial chrome plating	16	Cap	Aluminum alloy	Chromate
5	Snap ring for hole	Stainless steel		17	Spacer	Aluminum alloy	Chromate
6	Housing	Aluminum alloy	Chromate	18	Hexagon nut	Steel	Zinc chromate
7	O-ring	Nitrile rubber		19	Cylinder body	Aluminum alloy	Hard alumite
8	Rod packing	Nitrile rubber		20	Hexagon socket set screw	Stainless steel	
9	Bearing			21	End plate *1	Aluminum alloy	Alumite
10	Cushion rubber (R)	Urethane rubber		22	Hexagon socket set screw	Stainless steel	
11	Piston	Aluminum alloy	Chromate	23	Spacer	Aluminum alloy	Chromate
12	Piston packing	Nitrile rubber					

*1 : The steel end plate is zinc chromate.

Repair parts list

STR2-B (standard), STR2-B-F (end plate material: steel)

Bore size (mm)	Kit No.	Repair parts No.
ø16	STR2-16K	❶ ❼ ❽ ❿ ⓬ ⓮
ø20	STR2-20K	
ø25	STR2-25K	
ø32	STR2-32K	

LCM
LCR
LCG
LCW
LCX
STM
STG
STS/STL
STR2
UCA2
ULK*
JSK/M2
JSG
JSC3/JSC4
USSD
UFCD
USC
UB
JSB3
LMB
LML
HCM
HCA
LBC
CAC4
UCAC2
CAC-N
UCAC-N
RCS2
RCC2
PCC
SHC
MCP
GLC
MFC
BBS
RRC
GRC
RV3*
NHS
HRL
LN
Hand
Chuk
MecHnd/Chuk
ShkAbs
FJ
FK
SpdContr
Ending

Internal structure and parts list (ball bearing)

● Rear piping

STR2-B-R

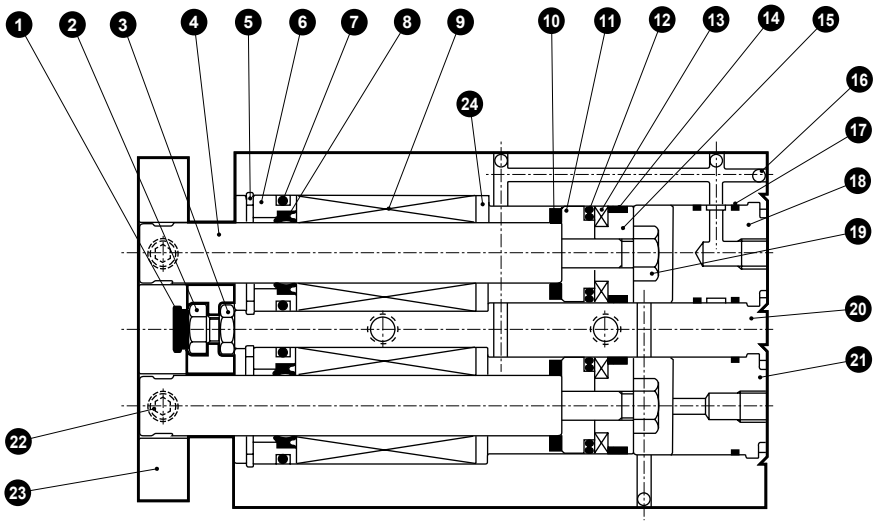

No.	Part name	Material	Remarks	No.	Part name	Material	Remarks
1	Cushion rubber (H)	Urethane rubber		13	Magnet	Plastic	
2	Hexagon head bolt	Stainless steel		14	Wear ring	Acetal resin	
3	Hexagon nut	Stainless steel		15	Spacer	Aluminum alloy	Chromate
4	Piston rod	Steel	Industrial chrome plating	16	Steel ball	Steel	
5	Snap ring for hole	Stainless steel		17	O-ring	Nitrile rubber	
6	Housing	Stainless steel (ø6, ø10) Aluminum alloy (ø16 to ø32)	Chromate	18	Cap (A)	Aluminum alloy	Chromate
				19	Hexagon nut	Steel	Zinc chromate
7	O-ring	Nitrile rubber		20	Cylinder body	Aluminum alloy	Hard alumite
8	Rod packing	Nitrile rubber		21	Cap (B)	Aluminum alloy	Chromate
9	Bearing			22	Hexagon socket set screw	Stainless steel	
10	Cushion rubber (R)	Urethane rubber		23	End plate	Aluminum alloy	Alumite
11	Piston	Aluminum alloy	Chromate	24	Spacer	Aluminum alloy	Chromate
12	Piston packing	Nitrile rubber					

Repair parts list

STR2-B-R (rear piping)

Bore size (mm)	Kit No.	Repair parts No.
ø 6	STR2-6K	❶ ❼ ❽ ❿ ⓬ ⓮
ø10	STR2-10K	
ø16	STR2-16K	
ø20	STR2-20K	
ø25	STR2-25K	
ø32	STR2-32K	

Note : Specify the kit No. when placing an order.

LCM
LCR
LCG
LCW
LCX
STM
STG
STS/STL
STR2
UCA2
ULK*
JSK/M2
JSG
JSC3/JSC4
USSD
UFCD
USC
UB
JSB3
LMB
LML
HCM
HCA
LBC
CAC4
UCAC2
CAC-N
UCAC-N
RCS2
RCC2
PCC
SHC
MCP
GLC
MFC
BBS
RRC
GRC
RV3*
NHS
HRL
LN
Hand
Chuk
MecHnd/Chuk
ShkAbs
FJ
FK
SpdContr
Ending

Dimensions (ø6 to ø32) CAD

● Standard, end plate material: steel (F), copper and PTFE free (P6), piping port position on the 180° opposite side (O)

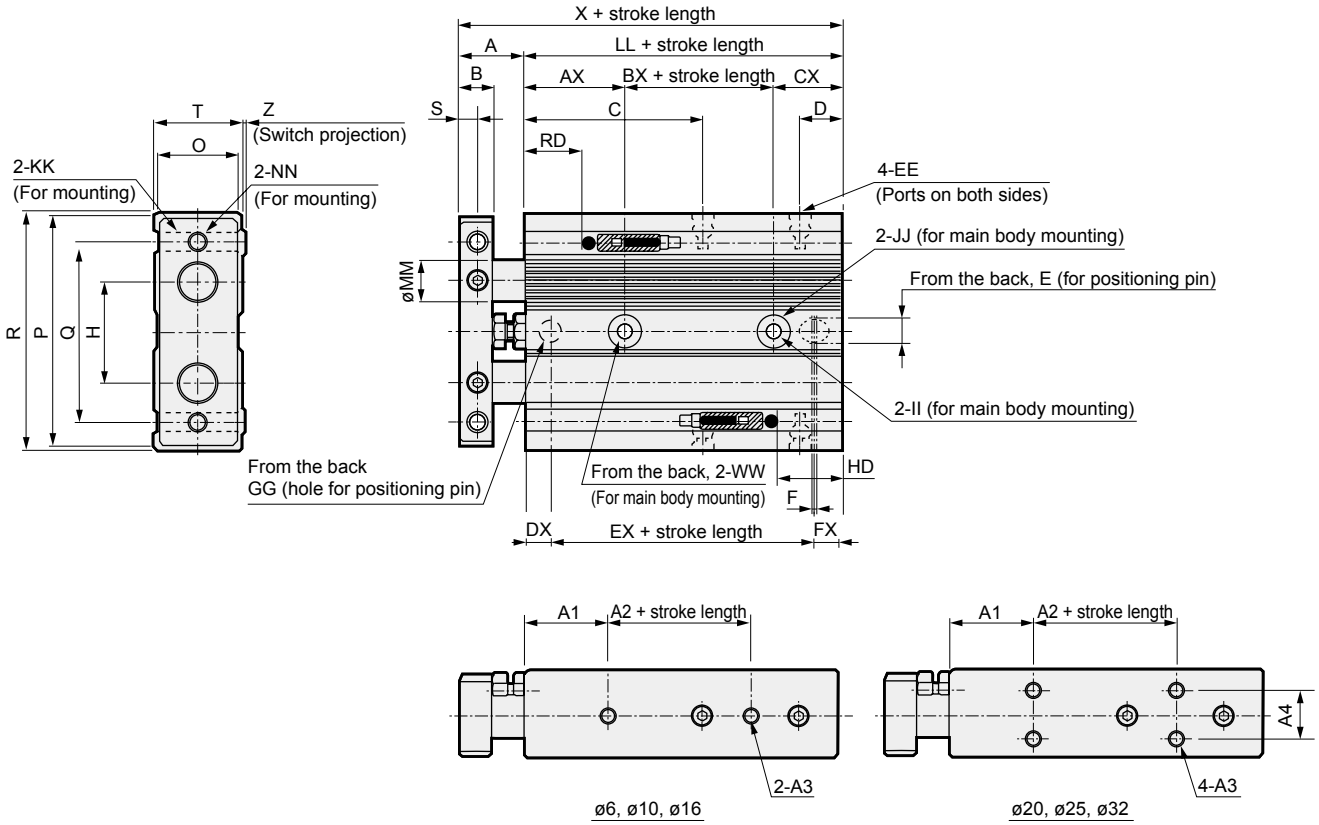

*1 : HD and RD dimensions for 10 mm stroke length differ from these dimensions according to the setting.
*2 : When using a custom stroke length, the total length is the same as that of the next longer standard stroke length.
*3 : Refer to page 618 for HD, RD and protruding dimensions of the 2-color display switch.

Code	Basic, O, F and P6 basic dimensions																
Bore size (mm)	A	B	C	D	E	EE	F	GG	H	II	JJ	KK	LL	MM	NN	O	P
ø 6	12	6	24.5	7.5	$4^{+0.07}_{+0.02}$depth 4	M5	1	$4^{+0.07}_{+0.02}$depth 4	14	3.4	6.5 spot face depth 3.3	M3 through	44	4	M3 through	11	34
ø10	14	6	35	7	$4^{+0.07}_{+0.02}$depth 4	M5	1	$4^{+0.07}_{+0.02}$depth 4	20	4.3	8 spot face depth 4.4	M4 through	55	6	M4 through	13	42
ø16	16	8	43	9.5	$6^{+0.07}_{+0.02}$depth 6	M5	1	$6^{+0.07}_{+0.02}$depth 6	25	4.3	8 spot face depth 4.4	M5 through	66	10	M5 through	19	52
ø20	20	10	46	9.5	$6^{+0.07}_{+0.02}$depth 6	M5	1	$6^{+0.07}_{+0.02}$depth 6	28	5.2	9.5 spot face depth 5.4	M5 through	75	12	M5 through	24	60
ø25	22	12	44	10.5	$6^{+0.07}_{+0.02}$depth 6	M5	1	$6^{+0.07}_{+0.02}$depth 6	34	6.3	11 spot face depth 6.5	M6 through	75	14	M6 through	30	70
ø32	22	12	56	11	$6^{+0.07}_{+0.02}$depth 6	Rc1/8	1	$6^{+0.07}_{+0.02}$depth 6	44	6.3	11 spot face depth 6.5	M6 through	91	16	M6 through	36	94

Code																		K0/K5/K2/K3	
Bore size (mm)	Q	R	S	T	WW	X	AX	BX	CX	DX	EX	FX	Z	A1	A2	A3	A4	HD	RD
ø 6	29	36	3	13	M4 depth 5	56	20	10	14	7	30	7	1.0	15	10	M3 depth 4	-	3.5 *1	21 *1
ø10	36	44	3	15	M5 depth 6	69	24	14	17	8	38	9	1.0	15	20	M3 depth 3.5	-	2.5 *1	33 *1
ø16	45	58	4	21	M5 depth 6	82	24	26	16	8	50	8	0.5	20	25	M4 depth 4	-	7	39.5
ø20	50	62	5	27	M6 depth 8	95	24	33	18	9	57	9	0.5	20	30	M4 depth 4	13	10.5	45
ø25	60	72	6	33	M8 depth 8	97	24	33	18	9	57	9	0.5	20	30	M5 depth 6	18	11.5	43.5
ø32	75	96	6	38	M8 depth 8	113	24	47	20	9	73	9	0.5	20	40	M5 depth 8	24	15.5	55.5

*4 : STR2-B-6 and 10 are not compatible with K0 and K5 reed switches.
*5 : The cylinder may tilt due to the uneven surface if it is installed with the spot face side (JJ) contacted. In this case, change the port position or use the option of piping port position on the 180° opposite side (O) to keep the spot face side from being the contacting surface.

Dimensions (ø6 to ø32)

● Rear piping (R)

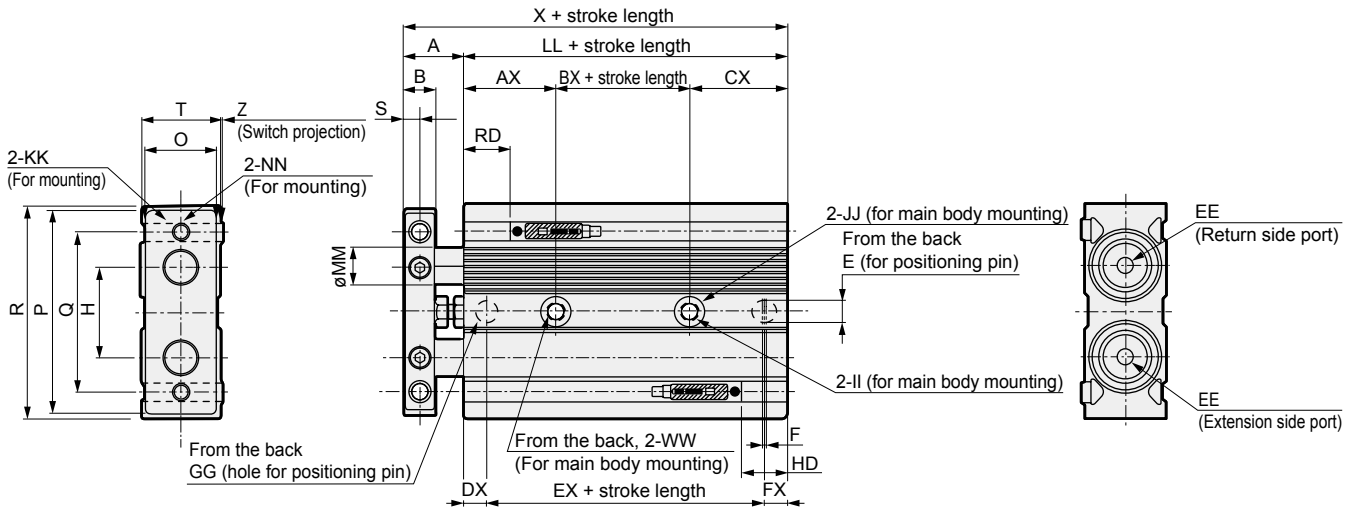

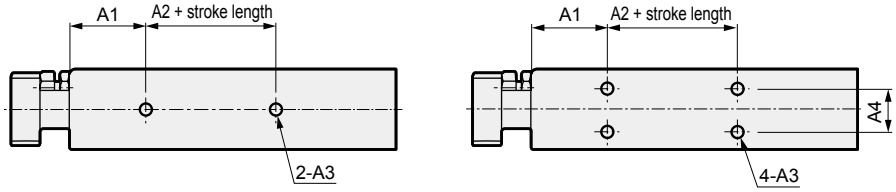

ø6, ø10, ø16 ø20, ø25, ø32

*1 : HD and RD dimensions for 10 mm stroke length differ from these dimensions according to the setting.
*2 : When using a custom stroke length, the total length is the same as that of the next longer standard stroke length.
*3 : Refer to page 618 for HD, RD and protruding dimensions of the 2-color display switch.

Code	R Basic dimensions														
Bore size (mm)	A	B	E	EE	F	GG	H	II	JJ	KK	LL	MM	NN	O	P
ø 6	12	6	$4^{+0.07}_{+0.02}$depth 4	M5	1	$4^{+0.07}_{+0.02}$depth 4	14	3.4	6.5 spot face depth 3.3	M3 through	54	4	M3 through	11	34
ø10	14	6	$4^{+0.07}_{+0.02}$depth 4	M5	1	$4^{+0.07}_{+0.02}$depth 4	20	4.3	8 spot face depth 4.4	M4 through	65	6	M4 through	13	42
ø16	16	8	$6^{+0.07}_{+0.02}$depth 6	M5	1	$6^{+0.07}_{+0.02}$depth 6	25	4.3	8 spot face depth 4.4	M5 through	76	10	M5 through	19	52
ø20	20	10	$6^{+0.07}_{+0.02}$depth 6	M5	1	$6^{+0.07}_{+0.02}$depth 6	28	5.2	9.5 spot face depth 5.4	M5 through	85	12	M5 through	24	60
ø25	22	12	$6^{+0.07}_{+0.02}$depth 6	M5	1	$6^{+0.07}_{+0.02}$depth 6	34	6.3	11 spot face depth 6.5	M6 through	85	14	M6 through	30	70
ø32	22	12	$6^{+0.07}_{+0.02}$depth 6	Rc1/8	1	$6^{+0.07}_{+0.02}$depth 6	44	6.3	11 spot face depth 6.5	M6 through	101	16	M6 through	36	94

Code																		K0/K5/K2/K3	
Bore size (mm)	Q	R	S	T	WW	X	AX	BX	CX	DX	EX	FX	Z	A1	A2	A3	A4	HD	RD
ø 6	29	36	3	13	M4 depth 5	66	20	10	24	7	40	7	1.0	15	10	M3 depth 4	-	13.5	21
ø10	36	44	3	15	M5 depth 6	79	24	14	27	8	48	9	1.0	15	20	M3 depth 3.5	-	12.5	33
ø16	45	58	4	21	M5 depth 6	92	24	26	26	8	60	8	0.5	20	25	M4 depth 4	-	17	39.5
ø20	50	62	5	27	M6 depth 8	105	24	33	28	9	67	9	0.5	20	30	M4 depth 4	13	20.5	45
ø25	60	72	6	33	M8 depth 8	107	24	33	28	9	67	9	0.5	20	30	M5 depth 6	18	21.5	43.5
ø32	75	96	6	38	M8 depth 8	123	24	47	30	9	83	9	0.5	20	40	M5 depth 8	24	25.5	55.5

*4 : STR2-B-6 and 10 are not compatible with K0 and K5 reed switches.
*5 : The cylinder may tilt due to the uneven surface if it is installed with the spot face side (JJ) contacted. In this case, change the port position or use the option of piping port position on the 180° opposite side (O) to keep the spot face side from being the contacting surface.

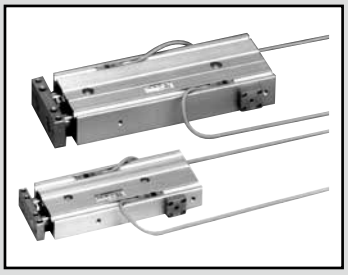

Twin rod cylinder/double acting/position locking

STR2-$^{M}_{B}$Q Series

● Bore size: ø16/ø20/ø25/ø32

JIS symbol 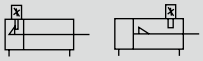

RoHS CAD

Specifications

Item		STR2-MQ (metal bush bearing) STR2-BQ (ball bearing)			
Bore size mm		ø16	ø20	ø25	ø32
Actuation		Double acting/position locking			
Working fluid		Compressed air			
Max. working pressure MPa		0.7 (≈100 psi, 7 bar)			
Min. working pressure MPa		0.15 (≈22 psi, 1.5 bar)			
Proof pressure MPa		1.05 (≈150 psi, 10.5 bar)			
Ambient temperature °C		-10 (14°F) to 60 (140°F) (no freezing)			
Port size		M5			Rc1/8
Stroke tolerance mm		+2.0 0			
Adjustable stroke range mm		Not adjustable (with head side position locking)/0 to -5 (with rod side position locking)			
Working piston speed mm/s		50 to 500			
Non-rotating accuracy (reference value)	STR2-M	±0.3°		±0.2°	
	STR2-B	±0.1°		±0.3°	
Piston rod bearing	STR2-M	Metal bush bearing			
	STR2-B	Ball bearing			
Cushion		Rubber cushion			
Lubrication		Not required (use turbine oil class 1 ISO VG32 if necessary for lubrication)			
Position locking mechanism		Rod side or head side			
Holding force N		Max. thrust x 0.7			
Max absorbed energy J	PUSH	0.181	0.303	0.68	1.3
	PULL	0.083	0.127	0.237	0.311

Stroke length

Bore size	Stroke length (mm)	Max. stroke length (mm)	Min. stroke length (mm)	Min. stroke with switch (mm)
ø16	10, 20, 30, 40, 50 60, 70, 80, 90, 100	100	5	10
ø20				
ø25				
ø32				

*1: Custom stroke length is available as made to order.

Theoretical thrust table

(Unit: N)

Bore size (mm)	Operating direction	Working pressure MPa						
		0.15	0.2	0.3	0.4	0.5	0.6	0.7
ø16	Push	60.3	80.4	1.21×10^2	1.61×10^2	2.01×10^2	2.41×10^2	2.81×10^2
	Pull	36.8	49.0	73.5	98.0	1.23×10^2	1.47×10^2	1.72×10^2
ø20	Push	94.2	1.26×10^2	1.88×10^2	2.51×10^2	3.14×10^2	3.77×10^2	4.40×10^2
	Pull	60.3	80.4	1.21×10^2	1.61×10^2	2.01×10^2	2.41×10^2	2.81×10^2
ø25	Push	1.47×10^2	1.96×10^2	2.95×10^2	3.93×10^2	4.91×10^2	5.89×10^2	6.87×10^2
	Pull	1.01×10^2	1.35×10^2	2.02×10^2	2.70×10^2	3.37×10^2	4.04×10^2	4.72×10^2
ø32	Push	2.41×10^2	3.22×10^2	4.83×10^2	6.43×10^2	8.04×10^2	9.65×10^2	1.13×10^3
	Pull	1.81×10^2	2.41×10^2	3.62×10^2	4.83×10^2	6.03×10^2	7.24×10^2	8.44×10^2

⚠ Be sure to read the safety precautions of the position locking STR2-Q on pages 630 to 633 before use.

Switch specifications

● 1-color/2-color display

Item	Proximity 2-wire		Proximity 3-wire			Reed 2-wire			
	K2H/K2V	K2YH/K2YV	K3H/K3V	K3PH/K3PV (Made to order)	K3YH/K3YV	K0H/K0V		K5H/K5V	
Applications	Dedicated for programmable controller		For programmable controller, relay			For programmable controller, relay		For programmable controller, relay, IC circuit (without indicator lamp), serial connection	
Output method	-		NPN output	PNP output	NPN output	-			
Power supply voltage	-		10 to 28 VDC			-			
Load voltage	10 to 30 VDC		30 VDC or less			12 VDC/24 VDC	110 VAC	5/12/24 VDC	110 VAC
Load current	5 to 20 mA (*3)		50 mA or less			5 to 50 mA	7 to 20 mA	50 mA or less	20 mA or less
Indicator lamp	LED (Lit when ON)	Red/green LED (Lit when ON)	LED (Lit when ON)	Yellow LED (Lit when ON)	Red/green LED (Lit when ON)	LED (Lit when ON)		-	
Leakage current	1 mA or less		10 μA or less			0 mA			
Weight g	1 m:18 3 m:49 5 m:80	1 m:31 3 m:85 5 m:139	1 m:18 3 m:49 5 m:80		1 m:31 3 m:85 5 m:139	1 m:18 3 m:49 5 m:80			

*1 : Refer to Ending Page 1 for detailed switch specifications and dimensions.
*2 : Switches other than the above models, such as switches with connectors, are also available. Refer to Ending Page 1.
*3 : The max. load current is 20 mA at 25°C. The current is lower than 20 mA if the operating ambient temperature around the switch is higher than 25°C. (5 to 10 mA at 60°C)

Cylinder weight

Unit: g

Bore size	Product weight at 0 mm stroke		Additional weight per S = 10 mm
	STR2-M	STR2-B	
ø16	390	405	31
ø20	605	605	43
ø25	910	890	59
ø32	1430	1480	84

(Example) Product weight

STR2-MQ-16-10-H-K2H-D

● Product weight for 0 mm stroke length ... 390 g

● Additional weight for stroke length 10 mm ... 31 g x 1 = 31 g

● Weight of 2 cylinder switches ... 18 g x 2 = 36 g

● Product weight ... 390 g + 31 g + 36 g = 457 g

Specifications for rechargeable battery

(Catalog No. CC-1226A)

● Design compatible with rechargeable battery manufacturing process.

STR2-$^{M}_{B}$Q-·····-P4*

LCM
LCR
LCG
LCW
LCX
STM
STG
STS/STL
STR2
UCA2
ULK*
JSK/M2
JSG
JSC3/JSC4
USSD
UFCD
USC
UB
JSB3
LMB
LML
HCM
HCA
LBC
CAC4
UCAC2
CAC-N
UCAC-N
RCS2
RCC2
PCC
SHC
MCP
GLC
MFC
BBS
RRC
GRC
RV3*
NHS
HRL
LN
Hand
Chuk
MecHnd/Chuk
ShkAbs
FJ
FK
SpdContr
Ending

How to order

Without switch (built-in magnet for switch)

STR2 - M Q - 16 ◯ - 30 - H ———— O

With switch (built-in magnet for switch)

STR2 - M Q - 16 ◯ - 30 - H - K0H - R - O

Model No.

Ⓐ Bearing

Ⓑ Bore size

Ⓒ Port thread

Ⓓ Stroke length
Refer to page 592 for the min. stroke length.
■ Custom stroke length
Available as made to order.

Ⓔ Position locking mechanism

Ⓕ Switch model No.

Ⓖ Switch quantity

Ⓗ Option *1

Code	Description
Ⓐ Bearing	
M	Metal bush bearing
B	Ball bearing
Ⓑ Bore size (mm)	
16	ø16
20	ø20
25	ø25
32	ø32
Ⓒ Port thread	
Blank	Rc thread
NN	NPT thread (ø32 only) (made-to-order product)
GN	G thread (ø32 only) (made-to-order product) *2
Ⓓ Stroke length (mm)	
10	10
20	20
30	30
40	40
50	50
60	60
70	70
80	80
90	90
100	100
Ⓔ Position locking mechanism	
H	With head side position locking
R	With rod side position locking

Ⓕ Switch model No.

Axial lead wire	Radial lead wire	Contact	Voltage AC	Voltage DC	Indicator	Lead wire
K0H*	**K0V***	Reed	●	●	1-color display	2-wire
K5H*	**K5V***	Reed	●	●	no indicator lamp	2-wire
K2H*	**K2V***	Proximity		●	1-color display	2-wire
K3H*	**K3V***	Proximity		●	1-color display	3-wire
K3PH*	**K3PV***	Proximity		●	1-color display (made to order)	3-wire
K2YH*	**K2YV***	Proximity		●	2-color display	2-wire
K3YH*	**K3YV***	Proximity		●	2-color display	3-wire

* Lead wire length	
Blank	1 m (standard)
3	3 m (option)
5	5 m (option)

Ⓖ Switch quantity	
R	1 on rod side
H	1 on head side
D	2

Ⓗ Option	
F	End plate material: steel
O	Piping port position on the 180° opposite side

⚠ Precautions for model No. selection

*1: The piping port positions for "O" are as shown in the figure below.

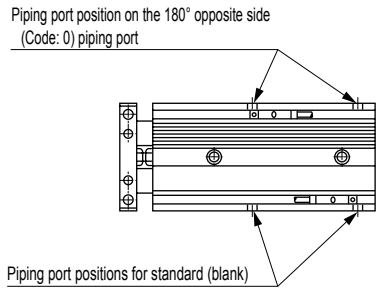

*2: In the case of G thread, ports on the opposite side (option "O") are not available. Rather than plug sealing, they are simply not provided. (The standard ports are not provided in the case of option "O".)

[Example of model No.]

STR2-MQ-16-30-H-K0H-R-O

Model: Twin rod cylinder, position locking

Ⓐ Bearing : Metal bush bearing
Ⓑ Bore size : ø16 mm
Ⓒ Port thread : Rc thread
Ⓓ Stroke length : 30 mm
Ⓔ Position locking mechanism : With head side position locking
Ⓕ Switch model No. : Reed K0H switch
Ⓖ Switch quantity : 1 on rod side
Ⓗ Option : Piping port position on the 180° opposite side

How to order switch

SW - K0H*

Switch model No.
(Item Ⓕ above)

MEMO

LCM
LCR
LCG
LCW
LCX
STM
STG
STS/STL
STR2
UCA2
ULK*
JSK/M2
JSG
JSC3/JSC4
USSD
UFCD
USC
UB
JSB3
LMB
LML
HCM
HCA
LBC
CAC4
UCAC2
CAC-N
UCAC-N
RCS2
RCC2
PCC
SHC
MCP
GLC
MFC
BBS
RRC
GRC
RV3*
NHS
HRL
LN
Hand
Chuk
MecHnd/Chuk
ShkAbs
FJ
FK
SpdContr
Ending

Internal structure and parts list (metal bush bearing)

● Position locking
with rod side position locking
STR2-MQ-R

● Piping port position on the 180° opposite side
STR2-MQ ··· -R ··· -O

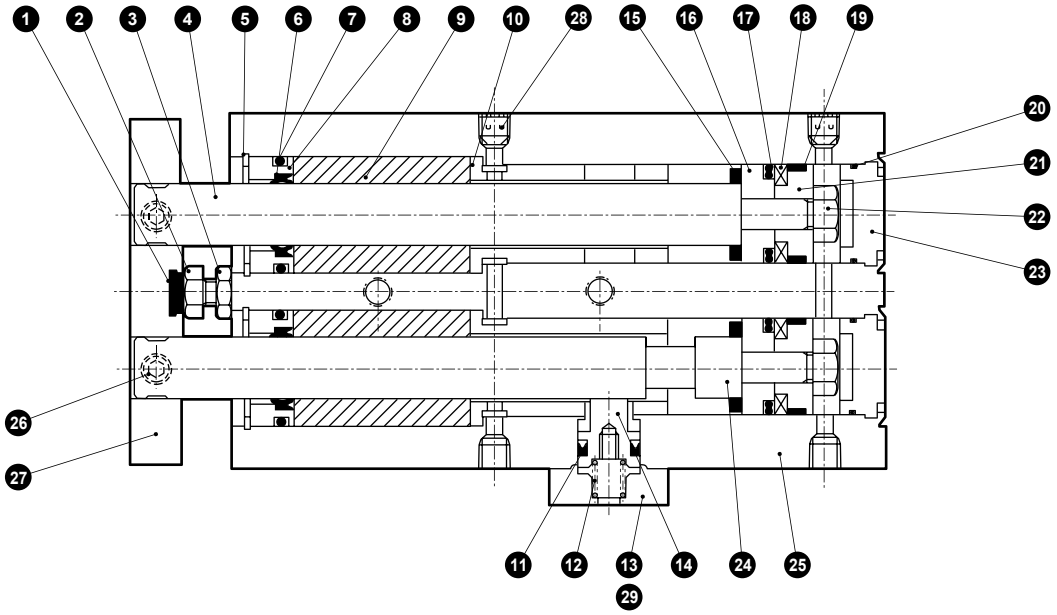

No.	Part name	Material	Remarks	No.	Part name	Material	Remarks
1	Cushion rubber (H)	Urethane rubber		16	Piston	Aluminum alloy	Chromate
2	Hexagon head bolt	Stainless steel		17	Piston packing	Nitrile rubber	
3	Hexagon nut	Stainless steel		18	Magnet	Plastic	
4	Piston rod (2)	Stainless steel (ø16, ø20) Steel (ø25, ø32)	Industrial chrome plating	19	Wear ring	Acetal resin	
				20	O-ring	Nitrile rubber	
5	Snap ring for hole	Stainless steel		21	Spacer	Aluminum alloy	Chromate
6	Rod packing	Nitrile rubber		22	Hexagon nut	Steel	Zinc chromate
7	O-ring	Nitrile rubber		23	Cap	Aluminum alloy	Chromate
8	Housing	Aluminum alloy	Chromate	24	Piston rod (1)	Stainless steel (ø16, ø20) Steel (ø25, ø32)	Industrial chrome plating
9	Bush	Aluminum alloy					
10	Adaptor	Aluminum alloy	Chromate	25	Cylinder body	Aluminum alloy	Hard alumite
11	Stopper packing	Nitrile rubber		26	Hexagon socket set screw	Stainless steel	
12	Coil spring	Piano wire	Electrodeposition	27	End plate	Aluminum alloy	Alumite
13	Stopper cover	Aluminum alloy	Alumite	28	Hexagon socket set screw	Stainless steel	
14	Stopper piston	Stainless steel		29	Hexagon socket head cap screw	Stainless steel	
15	Cushion rubber (R)	Urethane rubber					

*: The steel end plate is zinc chromate.

Repair parts list

Bore size (mm)	Kit No.	Repair parts No.
ø16	STR2-Q-16K	1 6 7 11
ø20	STR2-Q-20K	
ø25	STR2-Q-25K	15 17 19
ø32	STR2-Q-32K	

Note: Specify the kit No. when placing an order.

LCM
LCR
LCG
LCW
LCX
STM
STG
STS/STL
STR2
UCA2
ULK*
JSK/M2
JSG
JSC3/JSC4
USSD
UFCD
USC
UB
JSB3
LMB
LML
HCM
HCA
LBC
CAC4
UCAC2
CAC-N
UCAC-N
RCS2
RCC2
PCC
SHC
MCP
GLC
MFC
BBS
RRC
GRC
RV3*
NHS
HRL
LN
Hand
Chuk
MecHnd/Chuk
ShkAbs
FJ
FK
SpdContr
Ending

Internal structure and parts list (metal bush bearing)

● Position locking
with head side position locking
STR2-MQ-H

● Piping port position on the 180° opposite side
STR2-MQ-H ··· -O

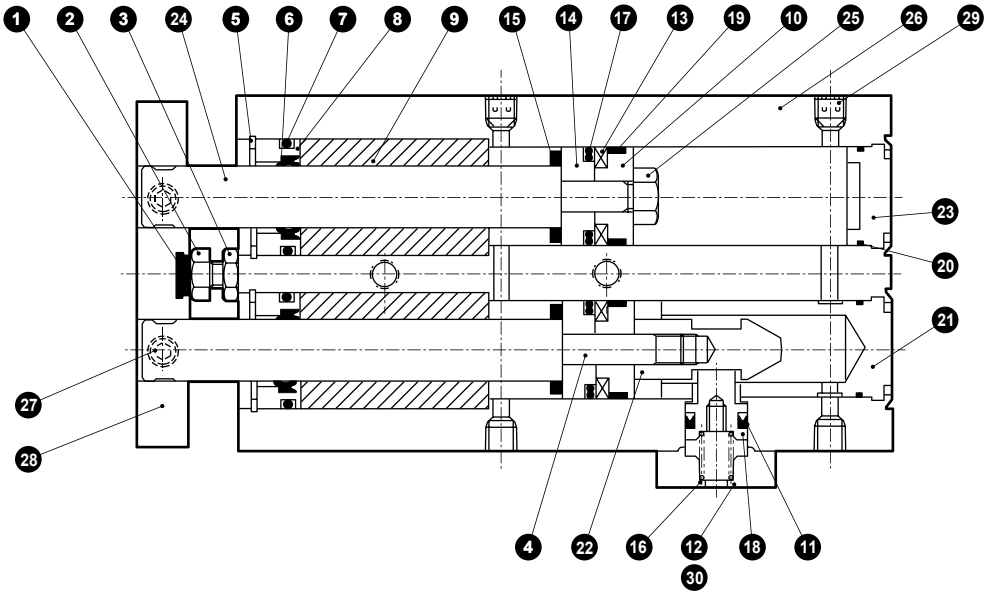

No.	Part name	Material	Remarks	No.	Part name	Material	Remarks
1	Cushion rubber (H)	Urethane rubber		16	Coil spring	Piano wire	Electrodeposition
2	Hexagon head bolt	Stainless steel		17	Piston packing	Nitrile rubber	
3	Hexagon nut	Stainless steel		18	Stopper piston	Stainless steel	
4	Piston rod (2)	Stainless steel (ø16, ø20) Steel (ø25, ø32)	Industrial chrome plating	19	Wear ring	Acetal resin	
				20	O-ring	Nitrile rubber	
5	Snap ring for hole	Stainless steel		21	Head cover	Aluminum alloy	Chromate
6	Rod packing	Nitrile rubber		22	Sleeve	Stainless steel	
7	O-ring	Nitrile rubber		23	Cap	Aluminum alloy	Chromate
8	Housing	Aluminum alloy	Chromate	24	Piston rod (1)	Stainless steel (ø16, ø20) Steel (ø25, ø32)	Industrial chrome plating
9	Bush	Aluminum alloy					
10	Spacer	Aluminum alloy	Chromate	25	Hexagon nut	Steel	Zinc chromate
11	Stopper packing	Nitrile rubber		26	Cylinder body	Aluminum alloy	Hard alumite
12	Stopper cover	Aluminum alloy	Alumite	27	Hexagon socket set screw	Stainless steel	
13	Magnet	Plastic		28	End plate	Aluminum alloy	Alumite
14	Piston	Aluminum alloy	Chromate	29	Hexagon socket set screw	Stainless steel	
15	Cushion rubber (R)	Urethane rubber		30	Hexagon socket head cap screw	Stainless steel	

*: The steel end plate is zinc chromate.

Repair parts list

Bore size (mm)	Kit No.	Repair parts No.
ø16	STR2-Q-16K	
ø20	STR2-Q-20K	1 6 7 11
ø25	STR2-Q-25K	15 17 19
ø32	STR2-Q-32K	

Note: Specify the kit No. when placing an order.

Internal structure and parts list (ball bearing)

● Position locking
with rod side position locking
STR2-BQ-R

● Piping port position on the 180° opposite side
STR2-BQ ··· -R ··· -O

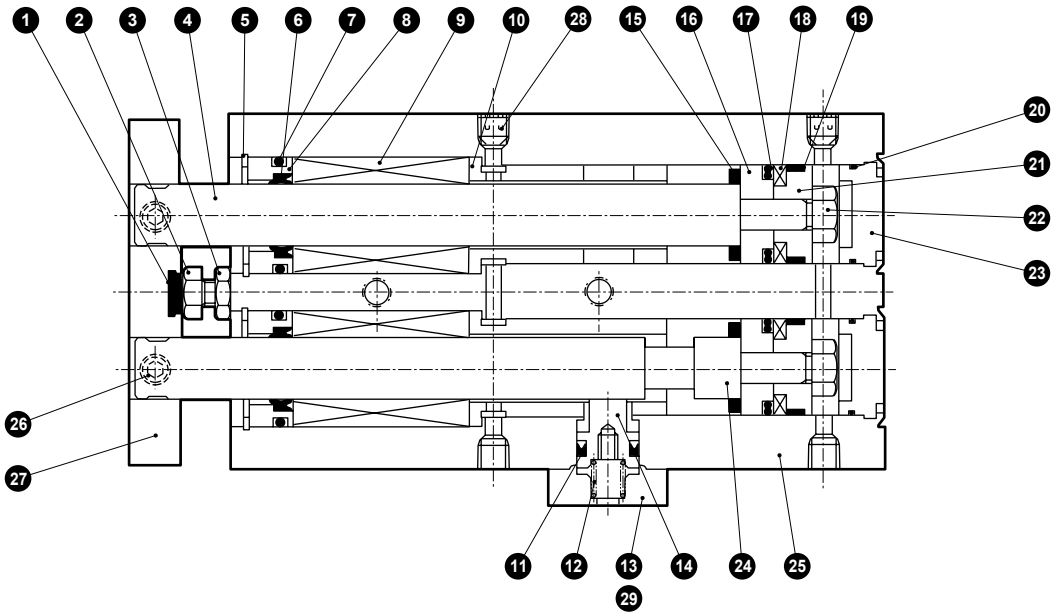

No.	Part name	Material	Remarks	No.	Part name	Material	Remarks
1	Cushion rubber (H)	Urethane rubber		16	Piston	Aluminum alloy	Chromate
2	Hexagon head bolt	Stainless steel		17	Piston packing	Nitrile rubber	
3	Hexagon nut	Stainless steel		18	Magnet	Plastic	
4	Piston rod (2)	Steel	Industrial chrome plating	19	Wear ring	Acetal resin	
5	Snap ring for hole	Stainless steel		20	O-ring	Nitrile rubber	
6	Rod packing	Nitrile rubber		21	Spacer	Aluminum alloy	Chromate
7	O-ring	Nitrile rubber		22	Hexagon nut	Steel	Zinc chromate
8	Housing	Aluminum alloy	Chromate	23	Cap	Aluminum alloy	Chromate
9	Bearing			24	Piston rod (1)	Steel	Industrial chrome plating
10	Adaptor	Aluminum alloy	Chromate	25	Cylinder body	Aluminum alloy	Hard alumite
11	Stopper packing	Nitrile rubber		26	Hexagon socket set screw	Stainless steel	
12	Coil spring	Piano wire	Electrodeposition	27	End plate	Aluminum alloy	Alumite
13	Stopper cover	Aluminum alloy	Alumite	28	Hexagon socket set screw	Stainless steel	
14	Stopper piston	Stainless steel		29	Hexagon socket head cap screw	Stainless steel	
15	Cushion rubber (R)	Urethane rubber					

Repair parts list

Bore size (mm)	Kit No.	Repair parts No.
ø16	STR2-Q-16K	1 6 7 11 15 17 19
ø20	STR2-Q-20K	
ø25	STR2-Q-25K	
ø32	STR2-Q-32K	

Note: Specify the kit No. when placing an order.

Internal structure and parts list (ball bearing)

● Position locking
with head side position locking
STR2-BQ-H

● Piping port position on the 180° opposite side
STR2-BQ-H ··· -O

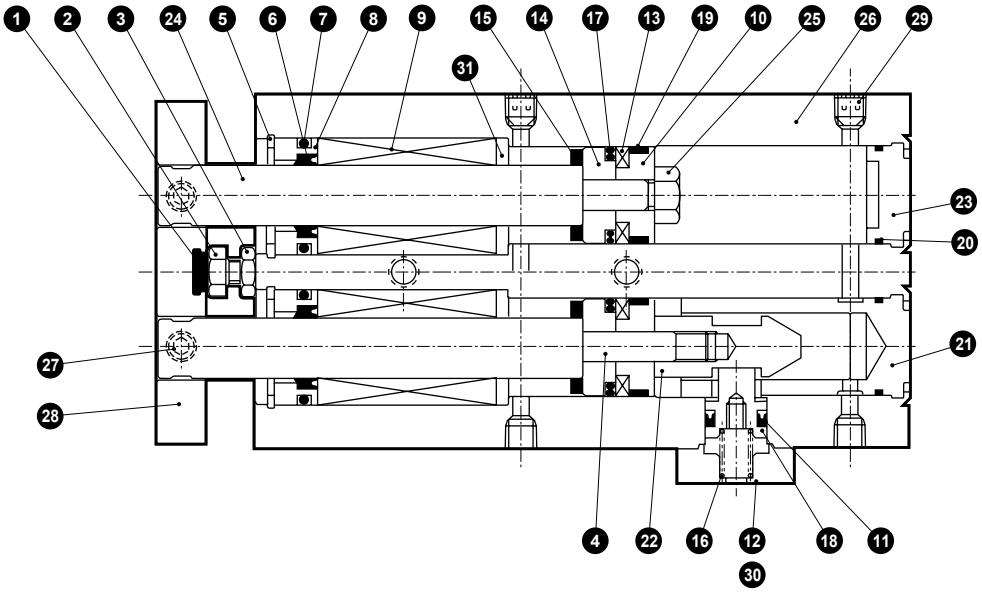

No.	Part name	Material	Remarks	No.	Part name	Material	Remarks
1	Cushion rubber (H)	Urethane rubber		17	Piston packing	Nitrile rubber	
2	Hexagon head bolt	Stainless steel		18	Stopper piston	Stainless steel	
3	Hexagon nut	Stainless steel		19	Wear ring	Acetal resin	
4	Piston rod (2)	Steel	Industrial chrome plating	20	O-ring	Nitrile rubber	
5	Snap ring for hole	Stainless steel		21	Head cover	Aluminum alloy	Chromate
6	Rod packing	Nitrile rubber		22	Sleeve	Stainless steel	
7	O-ring	Nitrile rubber		23	Cap	Aluminum alloy	Chromate
8	Housing	Aluminum alloy	Chromate	24	Piston rod (1)	Steel	Industrial chrome plating
9	Bearing			25	Hexagon nut	Steel	Zinc chromate
10	Spacer	Aluminum alloy	Chromate	26	Cylinder body	Aluminum alloy	Hard alumite
11	Stopper packing	Nitrile rubber		27	Hexagon socket set screw	Stainless steel	
12	Stopper cover	Aluminum alloy	Alumite	28	End plate	Aluminum alloy	Alumite
13	Magnet	Plastic		29	Hexagon socket set screw	Stainless steel	
14	Piston	Aluminum alloy	Chromate	30	Hexagon socket head cap screw	Stainless steel	
15	Cushion rubber (R)	Urethane rubber		31	Spacer	Aluminum alloy	Chromate
16	Coil spring	Piano wire	Electrodeposition				

Repair parts list

Bore size (mm)	Kit No.	Repair parts No.
ø16	STR2-Q-16K	
ø20	STR2-Q-20K	1 6 7 11
ø25	STR2-Q-25K	15 17 19
ø32	STR2-Q-32K	

Note: Specify the kit No. when placing an order.

LCM
LCR
LCG
LCW
LCX
STM
STG
STS/STL
STR2
UCA2
ULK*
JSK/M2
JSG
JSC3/JSC4
USSD
UFCD
USC
UB
JSB3
LMB
LML
HCM
HCA
LBC
CAC4
UCAC2
CAC-N
UCAC-N
RCS2
RCC2
PCC
SHC
MCP
GLC
MFC
BBS
RRC
GRC
RV3*
NHS
HRL
LN
Hand
Chuk
MecHnd/Chuk
ShkAbs
FJ
FK
SpdContr
Ending

Dimensions (ø16 to ø32)

CAD

● Position locking (Q), head side position locking (H) and piping port position on the 180° opposite side (O)

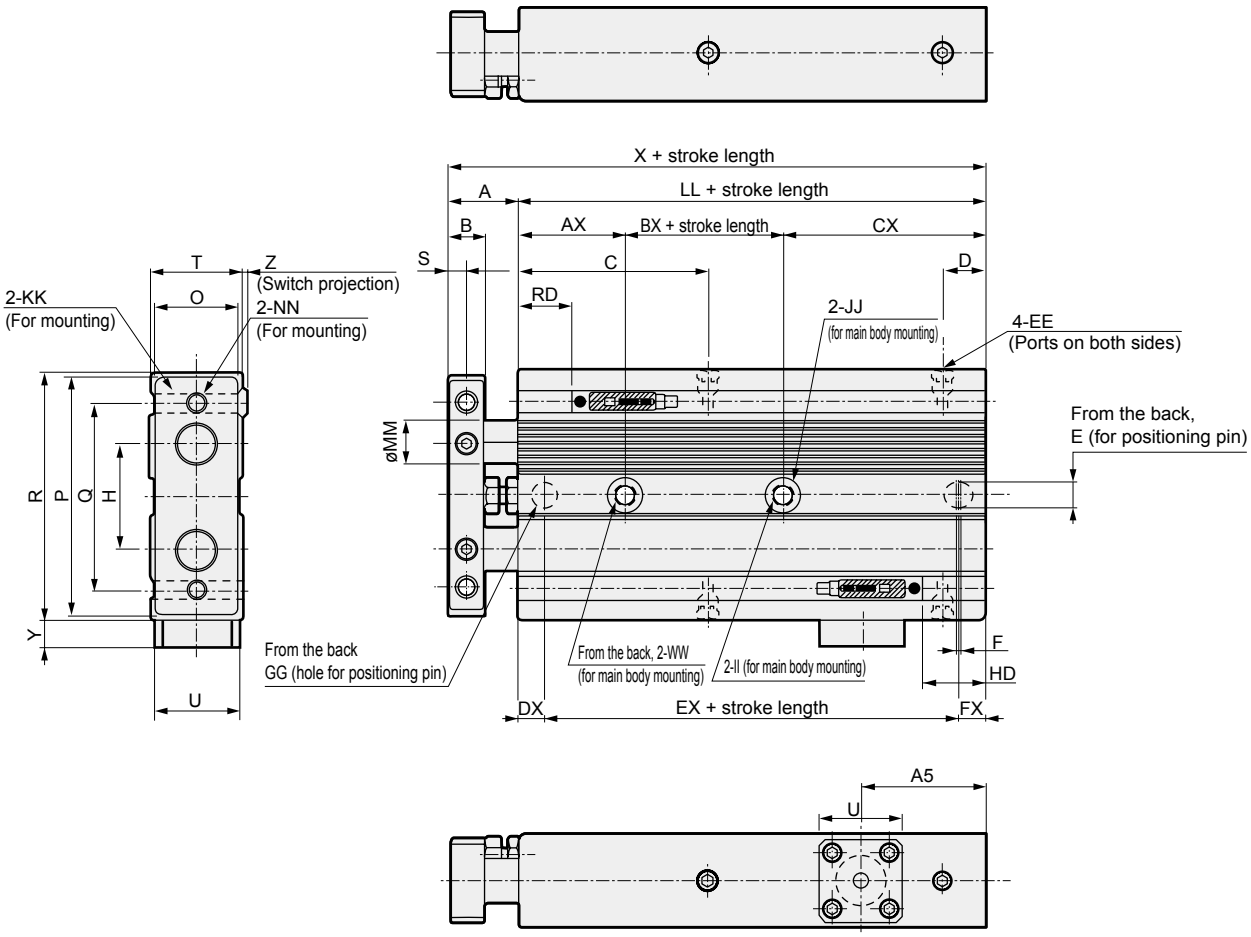

*1 : HD and RD dimensions for 10 mm stroke length differ from these dimensions according to the setting.
*2 : Refer to page 618 for HD, RD and protruding dimensions of the 2-color display switch.
*3 : The cylinder may tilt due to the uneven surface if it is installed with the spot face side (JJ) contacted. In this case, change the port position or use the option of piping port position on the 180° opposite side (O) to keep the spot face side from being the contacting surface.

Code	Q-H Basic dimensions																
Bore size (mm)	A	B	C	D	E	EE	F	GG	H	II	JJ	KK	LL	MM	NN	O	P
ø16	16	8	43	9.5	$6^{+0.07}_{+0.02}$ depth 6	M5	1	$6^{+0.07}_{+0.02}$ depth 6	25	4.3	8 spot face depth 4.4	M5 through	96	10	M5 through	19	52
ø20	20	10	46	9.5	$6^{+0.07}_{+0.02}$ depth 6	M5	1	$6^{+0.07}_{+0.02}$ depth 6	28	5.2	9.5 spot face depth 5.4	M5 through	105	12	M5 through	24	60
ø25	22	12	44	10.5	$6^{+0.07}_{+0.02}$ depth 6	M5	1	$6^{+0.07}_{+0.02}$ depth 6	34	6.3	11 spot face depth 6.5	M6 through	105	14	M6 through	30	70
ø32	22	12	56	11	$6^{+0.07}_{+0.02}$ depth 6	Rc1/8	1	$6^{+0.07}_{+0.02}$ depth 6	44	6.3	11 spot face depth 6.5	M6 through	121	16	M6 through	36	94

Code																	K0/K5/K2/K3	
Bore size (mm)	Q	R	S	T	U	WW	X	Y	AX	BX	CX	DX	EX	FX	Z	A5	HD	RD
ø16	45	58	4	21	19	M5 depth 6	112	6	24	26	46	8	80	8	0.5	28	37	39.5
ø20	50	62	5	27	23	M6 depth 8	125	7.5	24	33	48	9	87	9	0.5	25	40.5	45
ø25	60	72	6	33	23	M8 depth 8	127	7.5	24	33	48	9	87	9	0.5	28	41.5	43.5
ø32	75	96	6	38	23	M8 depth 8	143	7.5	24	47	50	9	103	9	0.5	27.5	45.5	55.5

Dimensions (ø16 to ø32)

CAD

● Position locking (Q), rod side position locking (R) and piping port position on the 180° opposite side (O)

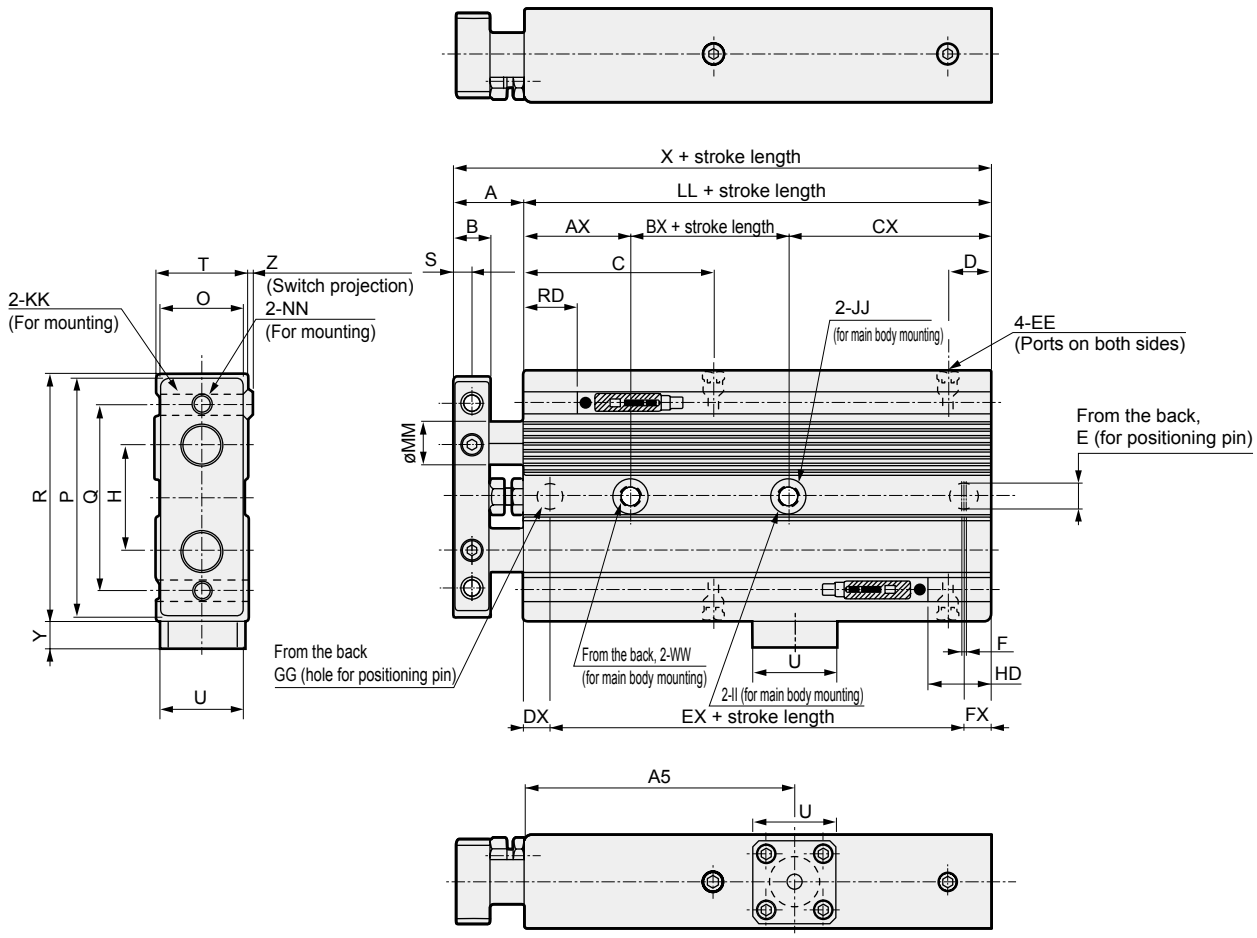

*1 : HD and RD dimensions for 10 mm stroke length differ from these dimensions according to the setting.
*2 : Refer to page 618 for HD, RD and protruding dimensions of the 2-color display switch.
*3 : The cylinder may tilt due to the uneven surface if it is installed with the spot face side (JJ) contacted. In this case, change the port position or use the option of piping port position on the 180° opposite side (O) to keep the spot face side from being the contacting surface.

Code	Q-R Basic dimensions																
Bore size (mm)	A	B	C	D	E	EE	F	GG	H	II	JJ	KK	LL	MM	NN	O	P
ø16	16	8	43	9.5	6 $^{+0.07}_{+0.02}$ depth 6	M5	1	6 $^{+0.07}_{+0.02}$ depth 6	25	4.3	8 spot face depth 4.4	M5 through	96	10	M5 through	19	52
ø20	20	10	46	9.5	6 $^{+0.07}_{+0.02}$ depth 6	M5	1	6 $^{+0.07}_{+0.02}$ depth 6	28	5.2	9.5 spot face depth 5.4	M5 through	105	12	M5 through	24	60
ø25	22	12	44	10.5	6 $^{+0.07}_{+0.02}$ depth 6	M5	1	6 $^{+0.07}_{+0.02}$ depth 6	34	6.3	11 spot face depth 6.5	M6 through	105	14	M6 through	30	70
ø32	22	12	56	11	6 $^{+0.07}_{+0.02}$ depth 6	Rc1/8	1	6 $^{+0.07}_{+0.02}$ depth 6	44	6.3	11 spot face depth 6.5	M6 through	121	16	M6 through	36	94

Code																	K0/K5/K2/K3	
Bore size (mm)	Q	R	S	T	U	WW	X	Y	AX	BX	CX	DX	EX	FX	Z	A5	HD	RD
ø16	45	58	4	21	19	M5 depth 6	112	6	24	26	46	8	80	8	0.5	61.5	7	69.5
ø20	50	62	5	27	23	M6 depth 8	125	7.5	24	33	48	9	87	9	0.5	61.5	10.5	75
ø25	60	72	6	33	23	M8 depth 8	127	7.5	24	33	48	9	87	9	0.5	61.5	11.5	73.5
ø32	75	96	6	38	23	M8 depth 8	143	7.5	24	47	50	9	103	9	0.5	72.5	15.5	85.5

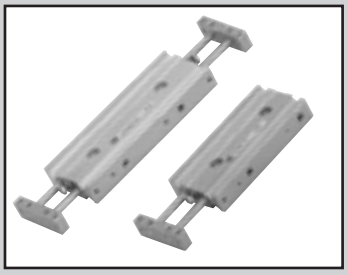

Twin rod cylinder/double acting/low speed

STR2-$^{M}_{B}$O Series

● Bore size: ø6/ø10/ø16/ø20/ø25/ø32

JIS symbol

RoHS CAD

Specifications

Item		STR2-MO (metal bush bearing) STR2-BO (ball bearing)					
Bore size mm		ø6	ø10	ø16	ø20	ø25	ø32
Actuation		Double acting/low speed					
Working fluid		Compressed air					
Max. working pressure MPa		0.7 (≈100 psi, 7 bar)					
Min. working pressure MPa		0.2 (≈29 psi, 2 bar)	0.15 (≈22 psi, 1.5 bar)	0.1 (≈15 psi, 1 bar)			
Proof pressure MPa		1.05 (≈150 psi, 10.5 bar)					
Ambient temperature °C		-10 (14°F) to 60 (140°F) (no freezing)					
Port size		M5					Rc1/8
Stroke tolerance mm		$^{+2.0}_{0}$					
Adjustable stroke range mm		0 to -5					
Working piston speed mm/s		10 to 200					
Non-rotating accuracy (reference value)	STR2-M	±0.4°	±0.3°			±0.2°	
	STR2-B	±0.2°	±0.1°			±0.3°	
Piston rod	STR2-M	Metal bush bearing					
Bearing	STR2-B	Ball bearing					
Cushion		Rubber cushion					
Lubrication		Not available					
Max absorbed energy J	PUSH	0.008	0.061	0.181	0.303	0.68	1.3
	PULL	0.059	0.083	0.083	0.127	0.237	0.311

Stroke

Bore size	Stroke (mm)	Max. stroke (mm)	Min. stroke (mm)	Available stroke (mm)	Min. stroke with switch (mm)
ø6	10, 20, 30, 40, 50	50	5	100	10
ø10					
ø16	10, 20, 30, 40, 50 60, 70, 80, 90, 100	100		200	
ø20					
ø25					
ø32					

Note: The custom stroke is available in 1 mm increments.
However, the total length is the same as that of the next longer standard stroke.

Theoretical thrust table

(Unit: N)

Bore size (mm)	Operating direction	Working pressure MPa							
		0.1	0.15	0.2	0.3	0.4	0.5	0.6	0.7
ø6	Push	-	-	11.3	17.0	22.6	28.3	33.9	39.6
	Pull	-	-	6.28	9.42	12.6	15.7	18.8	22.0
ø10	Push	-	23.6	31.4	47.1	62.8	78.5	94.2	1.10×10^{2}
	Pull	-	15.1	20.1	30.2	40.2	50.3	60.3	70.4
ø16	Push	40.2	60.3	80.4	1.21×10^{2}	1.61×10^{2}	2.01×10^{2}	2.41×10^{2}	2.81×10^{2}
	Pull	24.5	36.8	49.0	73.5	98.0	1.23×10^{2}	1.47×10^{2}	1.72×10^{2}
ø20	Push	62.8	94.2	1.26×10^{2}	1.88×10^{2}	2.51×10^{2}	3.14×10^{2}	3.77×10^{2}	4.40×10^{2}
	Pull	40.2	60.3	80.4	1.21×10^{2}	1.61×10^{2}	2.01×10^{2}	2.41×10^{2}	2.81×10^{2}
ø25	Push	98.2	1.47×10^{2}	1.96×10^{2}	2.95×10^{2}	3.93×10^{2}	4.91×10^{2}	5.89×10^{2}	6.87×10^{2}
	Pull	67.4	1.01×10^{2}	1.35×10^{2}	2.02×10^{2}	2.70×10^{2}	3.37×10^{2}	4.04×10^{2}	4.72×10^{2}
ø32	Push	1.61×10^{2}	2.41×10^{2}	3.22×10^{2}	4.83×10^{2}	6.43×10^{2}	8.04×10^{2}	9.65×10^{2}	1.13×10^{3}
	Pull	1.21×10^{2}	1.81×10^{2}	2.41×10^{2}	3.62×10^{2}	4.83×10^{2}	6.03×10^{2}	7.24×10^{2}	8.44×10^{2}

Switch specifications

● 1-color/2-color LED

Item	Proximity 2-wire		Proximity 3-wire			Reed 2-wire			
	K2H/K2V	K2YH/ K2YV	K3H/K3V	K3PH/K3PV (Made to order)	K3YH/ K3YV	K0H/K0V		K5H/K5V	
Applications	Dedicated for programmable controller		For programmable controller, relay			For programmable controller, relay		For programmable controller, relay, IC circuit (without indicator lamp), serial connection	
Output method	-		NPN output	PNP output	NPN output	-			
Power supply voltage	-		10 to 28 VDC			-			
Load voltage	10 to 30 VDC		30 VDC or less			12 VDC/24 VDC	110 VAC	5/12/24 VDC	110 VAC
Load current	5 to 20 mA (*3)		50 mA or less			5 to 50 mA	7 to 20 mA	50 mA or less	20 mA or less
Indicator lamp	LED (ONHourON)	Red/green LED (Lit when ON)	LED (Lit when ON)	Yellow LED (Lit when ON)	Red/green LED (Lit when ON)	LED (Lit when ON)		-	
Leakage current	1 mA or less		10 μA or less			0mA			
Weight g	1 m: 18 3 m: 49 5 m: 80	1 m: 31 3 m: 85 5 m: 139	1 m: 18 3 m: 49 5 m: 80		1 m: 31 3 m: 85 5 m: 139	1 m: 18 3 m: 49 5 m: 80			

*1 : Refer to Ending Page 1 for detailed switch specifications and dimensions.
*2 : Switches other than the above models, such as switches with connectors, are also available. Refer to Ending Page 1.
*3 : The max. load current is 20 mA at 25°C. The current is lower than 20 mA if the operating ambient temperature around the switch is higher than 25°C. (5 to 10 mA at 60°C)

Cylinder weight

Unit: g

Bore size	Product weight at 0 mm stroke		Additional weight per S = 10 mm
	STR2-M	STR2-B	
ø6	60	64	10
ø10	140	155	14
ø16	240	300	20
ø20	340	405	40
ø25	580	610	52
ø32	1300	1150	83

(Example) Product weight
STR2-M-6-10-K2H-D

● Product weight at 0 mm stroke…60g

● Additional weight for 10 mm stroke…10g×1=10g

● Weight of 2 cylinder switches 18g×2=36g

● Product weight……60g+10g+36g=106g

LCM
LCR
LCG
LCW
LCX
STM
STG
STS/STL
STR2
UCA2
ULK*
JSK/M2
JSG
JSC3/JSC4
USSD
UFCD
USC
UB
JSB3
LMB
LML
HCM
HCA
LBC
CAC4
UCAC2
CAC-N
UCAC-N
RCS2
RCC2
PCC
SHC
MCP
GLC
MFC
BBS
RRC
GRC
RV3*
NHS
HRL
LN
Hand
Chuk
MecHnd/Chuk
ShkAbs
FJ
FK
SpdContr
Ending

How to order

Without switch (built-in magnet for switch)

STR2 - M O - 16 ◯ - 30 ——— O

With switch (built-in magnet for switch)

STR2 - M O - 16 ◯ - 30 - K0H - R - O

Model No.

Ⓐ Bearing

Ⓑ Bore size

Ⓒ Port thread

Ⓓ Stroke

■ Custom stroke
Available in 1 mm increments.
However, the total length is the same as that of the next longer standard stroke.

Ⓔ Switch model No. *1

Ⓕ Switch quantity

Ⓖ Option *2

Code	Description
Ⓐ Bearing	
M	Metal bush bearing
B	Ball bearing

Ⓑ Bore size (mm)	
6	ø6
10	ø10
16	ø16
20	ø20
25	ø25
32	ø32

Ⓒ Port thread	
Blank	Rc thread
NN	NPT thread (ø32 only) (made-to-order product)
GN	G thread (ø32 only) (made-to-order product) *3

Ⓓ Stroke (mm)

Bore size	Stroke	Available stroke	Custom stroke
ø6	5 to 50	100	In 1 mm increments
ø10	5 to 50	100	
ø16	5 to 100	200	
ø20	5 to 100	200	
ø25	5 to 100	200	
ø32	5 to 100	200	

Ⓔ Switch model No.

Straight lead wire	L-shaped lead wire	Contact	Voltage AC	Voltage DC	Indicator	Lead wire
K0H*	K0V*	Reed	●	●	1-color LED	2-wire
K5H*	K5V*		●	●	no indicator lamp	
K2H*	K2V*	Proximity		●	1-color LED	2-wire
K3H*	K3V*			●		3-wire
K3PH*	K3PV*			●	1-color LED (made to order)	3-wire
K2YH*	K2YV*			●	2-color LED	2-wire
K3YH*	K3YV*			●		3-wire

*** Lead wire length**	
Blank	1 m (standard)
3	3 m (option)
5	5 m (option)

Ⓕ Switch quantity	
R	1 on rod side
H	1 on head side
D	2

Ⓖ Option	
F	End plate material: steel
O	Piping port position on the 180° opposite side

⚠ Precautions for model No. selection

*1 : STR2-B-6 and 10 are not compatible with a reed switch.
*2 : The piping port positions for "O" are as shown in the figure below.

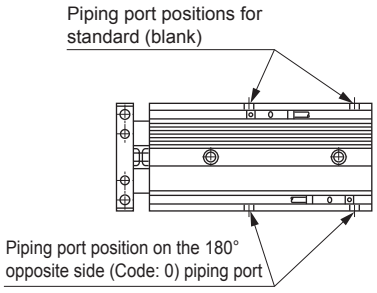

*3 : In the case of G thread, ports on the opposite side (option "O") are not available. Rather than plug sealing, they are simply not provided.
(The standard ports are not provided in the case of option "O".)

[Example of model No.]

STR2-MO-16-30-K0H-R-O

Model: Twin rod cylinder, low speed

Ⓐ Bearing : Metal bush bearing
Ⓑ Bore size : ø16 mm
Ⓒ Port thread : Rc thread
Ⓓ Stroke : 30 mm
Ⓔ Switch model No. : Reed K0H switch
Ⓕ Switch quantity : 1 on rod side
Ⓖ Option : Piping port position on the 180° opposite side

How to order switch

SW - K0H*

Switch model No.
(Item Ⓔ above)

MEMO

Internal structure and parts list (metal bush bearing ø6/ø10)

● Low speed

STR2-MO

● Piping port position on the 180° opposite side

STR2-MO ··· -O

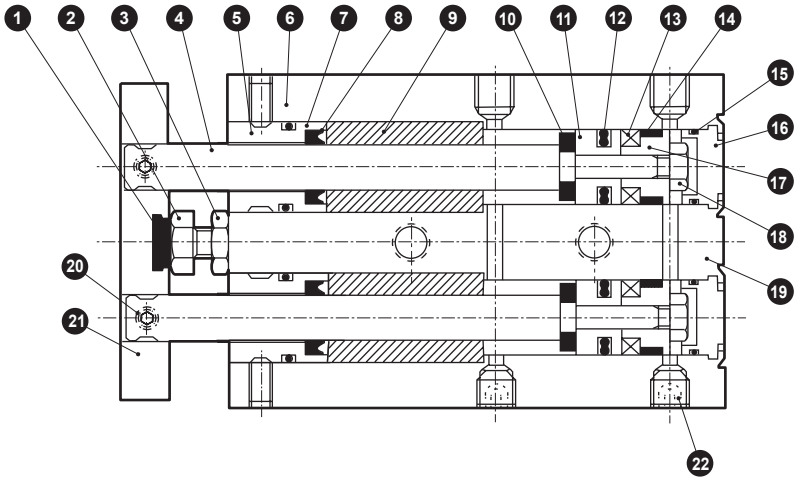

No.	Part name	Material	Remarks	No.	Part name	Material	Remarks
1	Cushion rubber (H)	Urethane rubber		12	Piston packing	Nitrile rubber	
2	Hexagon head bolt	Stainless steel		13	Magnet	Plastic	
3	Hexagon nut	Stainless steel		14	Wear ring	Acetal resin	
4	Piston rod	Stainless steel		15	O-ring	Nitrile rubber	
5	Housing	Stainless steel		16	Cap	Aluminum alloy	Chromate
6	Hexagon socket set screw	Stainless steel		17	Spacer	Aluminum alloy	Chromate
7	O-ring	Nitrile rubber		18	Hexagon nut	Steel	Zinc chromate
8	Rod packing	Nitrile rubber		19	Cylinder body	Aluminum alloy	Hard alumite
9	Bush	Copper alloy		20	Hexagon socket set screw	Stainless steel	
10	Cushion rubber (R)	Urethane rubber		21	End plate *1	Aluminum alloy	Alumite
11	Piston	Aluminum alloy	Chromate	22	Hexagon socket set screw	Stainless steel	

*1 : The steel end plate is zinc chromate.

Repair parts list

STR2-MO (low speed) * Repair parts other than the piston packing are the same as those of the standard.

Bore size (mm)	Kit No.	Repair parts No.
ø6	STR2-O-6K	1 7 8 10 12 14
ø10	STR2-O-10K	

Note: Specify the kit No. when placing an order.

Internal structure and parts list (metal bush bearing ø16/ø20/ø25/ø32)

● Low speed
STR2-MO

● Piping port position on the 180° opposite side
STR2-MO ··· -O

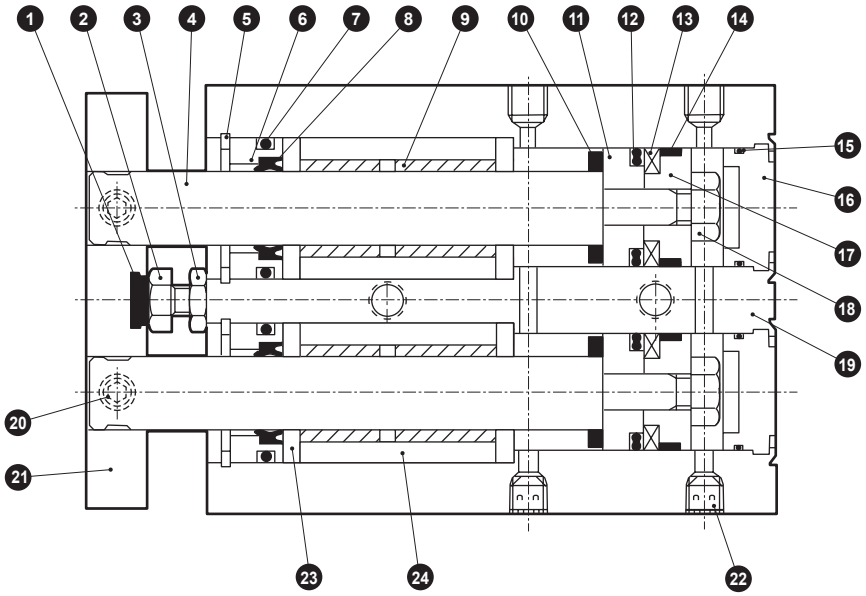

No.	Part name	Material	Remarks	No.	Part name	Material	Remarks
1	Cushion rubber (H)	Urethane rubber		13	Magnet	Plastic	
2	Hexagon head bolt	Stainless steel		14	Wear ring	Acetal resin	
3	Hexagon nut	Stainless steel		15	O-ring	Nitrile rubber	
4	Piston rod	Stainless steel (ø16, ø20) Steel (ø25, ø32)	Industrial chrome plating	16	Cap	Aluminum alloy	Chromate
				17	Spacer	Aluminum alloy	Chromate
5	Snap ring for hole	Stainless steel		18	Hexagon nut	Steel	Zinc chromate
6	Housing	Aluminum alloy	Chromate	19	Cylinder body	Aluminum alloy	Hard alumite
7	O-ring	Nitrile rubber		20	Hexagon socket set screw	Stainless steel	
8	Rod packing	Nitrile rubber		21	End plate *1	Aluminum alloy	Alumite
9	Bush	Copper alloy		22	Hexagon socket set screw	Stainless steel	
10	Cushion rubber (R)	Urethane rubber		23	Spacer	Aluminum alloy	Chromate
11	Piston	Aluminum alloy	Chromate	24	Aluminum housing	Aluminum alloy	Chromate
12	Piston packing	Nitrile rubber					

*1 : The steel end plate is zinc chromate.

Repair parts list

STR2-MO (low speed) * Repair parts other than the piston packing are the same as those of the standard.

Bore size (mm)	Kit No.	Repair parts No.
ø16	STR2-O-16K	❶ ❼ ❽ ❿ ⓬ ⓮
ø20	STR2-O-20K	
ø25	STR2-O-25K	
ø32	STR2-O-32K	

Note: Specify the kit No. when placing an order.

Internal structure and parts list (ball bearing ø6/ø10)

● Low speed

STR2-BO

● Piping port position on the 180° opposite side

STR2-BO ··· -O

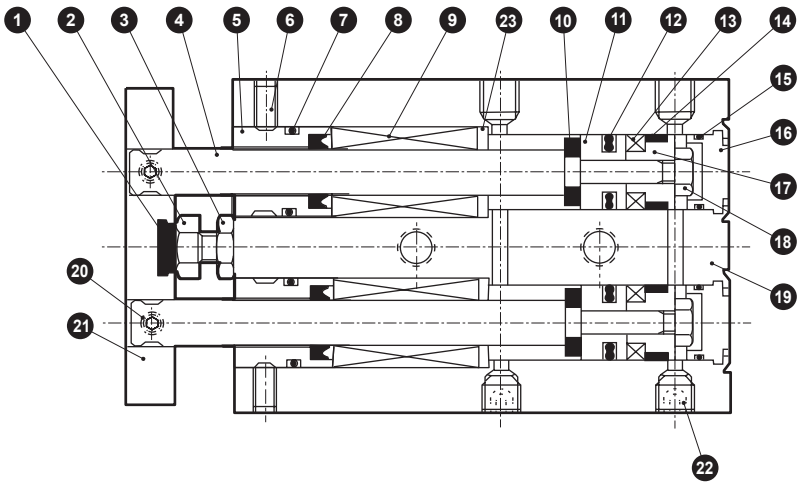

No.	Part name	Material	Remarks	No.	Part name	Material	Remarks
1	Cushion rubber (H)	Urethane rubber		13	Magnet	Plastic	
2	Hexagon head bolt	Stainless steel		14	Wear ring	Acetal resin	
3	Hexagon nut	Stainless steel		15	O-ring	Nitrile rubber	
4	Piston rod	Steel	Industrial chrome plating	16	Cap	Aluminum alloy	Chromate
5	Housing	Stainless steel		17	Spacer	Aluminum alloy	Chromate
6	Hexagon socket set screw	Stainless steel		18	Hexagon nut	Steel	Zinc chromate
7	O-ring	Nitrile rubber		19	Cylinder body	Aluminum alloy	Hard alumite
8	Rod packing	Nitrile rubber		20	Hexagon socket set screw	Stainless steel	
9	Bearing			21	End plate *1	Aluminum alloy	Alumite
10	Cushion rubber (R)	Urethane rubber		22	Hexagon socket set screw	Stainless steel	
11	Piston	Aluminum alloy	Chromate	23	Spacer	Aluminum alloy	Chromate
12	Piston packing	Nitrile rubber					

Repair parts list

STR2-BO (low speed) * Repair parts other than the piston packing are the same as those of the standard.

Bore size (mm)	Kit No.	Repair parts No.
ø6	STR2-O-6K	1 7 8 10 12 14
ø10	STR2-O-10K	

Note: Specify the kit No. when placing an order.

Internal structure and parts list (ball bearing ø16/ø20/ø25/ø32)

● Low speed

STR2-BO

● Piping port position on the 180° opposite side

STR2-BO ··· -O

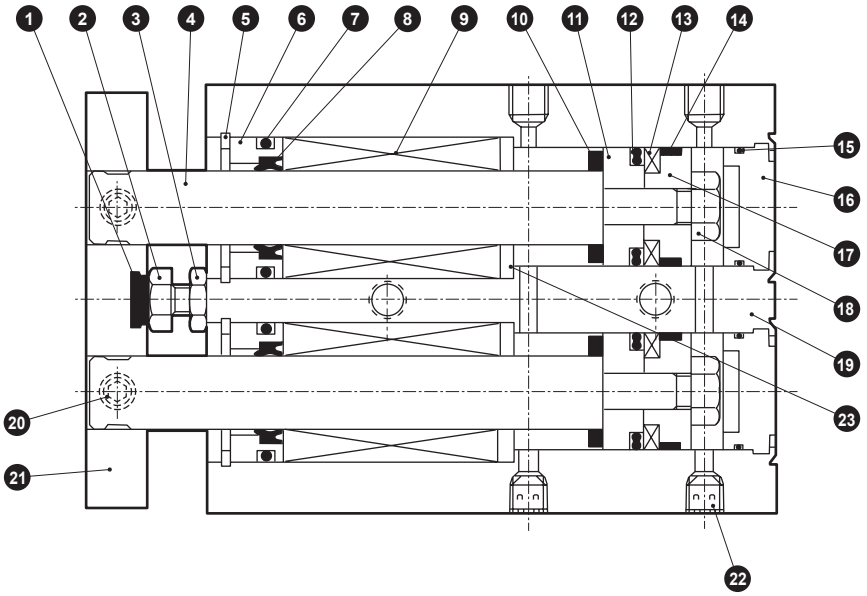

No.	Part name	Material	Remarks	No.	Part name	Material	Remarks
1	Cushion rubber (H)	Urethane rubber		13	Magnet	Plastic	
2	Hexagon head bolt	Stainless steel		14	Wear ring	Acetal resin	
3	Hexagon nut	Stainless steel		15	O-ring	Nitrile rubber	
4	Piston rod	Steel	Industrial chrome plating	16	Cap	Aluminum alloy	Chromate
5	Snap ring for hole	Stainless steel		17	Spacer	Aluminum alloy	Chromate
6	Housing	Aluminum alloy	Chromate	18	Hexagon nut	Steel	Zinc chromate
7	O-ring	Nitrile rubber		19	Cylinder body	Aluminum alloy	Hard alumite
8	Rod packing	Nitrile rubber		20	Hexagon socket set screw	Stainless steel	
9	Bearing			21	End plate *1	Aluminum alloy	Alumite
10	Cushion rubber (R)	Urethane rubber		22	Hexagon socket set screw	Stainless steel	
11	Piston	Aluminum alloy	Chromate	23	Spacer	Aluminum alloy	Chromate
12	Piston packing	Nitrile rubber					

Repair parts list

STR2-BO (low speed) * Repair parts other than the piston packing are the same as those of the standard.

Bore size (mm)	Kit No.	Repair parts No.
ø16	STR2-O-16K	❶ ❼ ❽ ❿ ⓬ ⓮
ø20	STR2-O-20K	
ø25	STR2-O-25K	
ø32	STR2-O-32K	

Note: Specify the kit No. when placing an order.

Dimensions

Same as STR2$^{M}_{B}$ Series (double acting/standard). Refer to page 590.

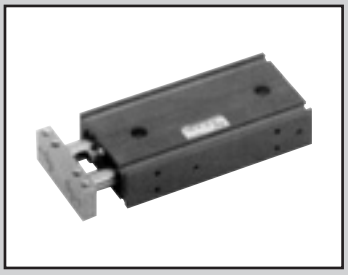

Twin rod cylinder/double acting/fine speed

STR2-$^{M}_{B}$F Series

● Bore size: ø10/ø16/ø20/ø25/ø32

JIS symbol

RoHS CAD

Specifications

Item		STR2-MF (metal bush bearing), STR2-BF (ball bearing)				
Bore size mm		ø10	ø16	ø20	ø25	ø32
Actuation		Double acting				
Working fluid		Compressed air				
Max. working pressure MPa		0.70 (≈100 psi, 7 bar)				
Min. working pressure MPa		0.15 (≈22 psi, 1.5 bar)	0.1 (≈15 psi, 1 bar)			
Ambient temperature °C		5 (41°F) to 60 (140°F)				
Port size		M5				Rc1/8
Stroke tolerance mm		0 to -5				
Working piston speed mm/s		1 to 200				
Non-rotating accuracy (reference value)	STR2-MF	±0.3°			±0.2°	
	STR2-BF	±0.1°			±0.3°	
Piston rod bearing	STR2-MF	Metal bush bearing				
	STR2-BF	Ball bearing				
Cushion		Rubber cushion				
Lubrication		Lubrication not possible				
Allowable absorbed energy J		0.061	0.181	0.303	0.68	1.3

* The low speed (STR2-0) is recommended for ø6.

Stroke

Bore size (mm)	Standard stroke (mm)	Max. stroke (mm)	Min. stroke (mm)	Min. stroke with switch (mm)
ø10	10, 20, 30, 40, 50	50	5	10
ø16, ø20, ø25, ø32	10, 20, 30, 40, 50, 60, 70, 80, 90, 100	100		

*1: The custom stroke is available in 1 mm increments. However, the total length is the same as that of the next longer standard stroke.

Switch specifications

● 1-color/2-color LED

Item	Proximity 2-wire		Proximity 3-wire			Reed 2-wire			
	K2H/K2V	K2YH/K2YV	K3H/K3V	K3PH/K3PV (Made to order)	K3YH/K3YV	K0H/K0V		K5H/K5V	
Applications	Dedicated for programmable controller		For programmable controller, relay			For programmable controller, relay		For programmable controller, relay, IC circuit (without indicator lamp), serial connection	
Output method	-		NPN output	PNP output	NPN output	-			
Power supply voltage	-		10 to 28 VDC			-			
Load voltage	10 to 30 VDC		30 VDC or less			12 VDC/24 VDC	110 VAC	5/12/24 VDC	110 VAC
Load current	5 to 20 mA (*3)		50 mA or less			5 to 50 mA	7 to 20 mA	50 mA or less	20 mA or less
Indicator	LED (Lit when ON)	Red/green LED (Lit when ON)	LED (Lit when ON)	Yellow LED (Lit when ON)	Red/green LED (Lit when ON)	LED (Lit when ON)		-	
Leakage current	1 mA or less		10 μA or less			0 mA			
Weight g	1 m:18 3 m:49 5 m:80	1 m:31 3 m:85 5 m:139	1 m:18 3 m:49 5 m:80		1 m:31 3 m:85 5 m:139	1 m:18 3 m:49 5 m:80			

*1 : Refer to Ending Page 1 for detailed switch specifications and dimensions.
*2 : Switches other than the above models, such as switches with connectors, are also available. Refer to Ending Page 1.
*3 : The max. load current is 20 mA at 25°C. The current is lower than 20 mA if the operating ambient temperature around the switch is higher than 25°C. (5 to 10 mA at 60°C)

Theoretical thrust table

(Unit: N)

Bore size (mm)	Operating direction	Working pressure MPa							
		0.1	0.15	0.2	0.3	0.4	0.5	0.6	0.7
ø10	Push	-	23.6	31.4	47.1	62.8	78.5	94.2	1.10×10^{2}
	Pull	-	15.1	20.1	30.2	40.2	50.3	60.3	70.4
ø16	Push	40.2	60.3	80.4	1.21×10^{2}	1.61×10^{2}	2.01×10^{2}	2.41×10^{2}	2.81×10^{2}
	Pull	24.5	36.8	49.0	73.5	98.0	1.23×10^{2}	1.47×10^{2}	1.72×10^{2}
ø20	Push	62.8	94.2	1.26×10^{2}	1.88×10^{2}	2.51×10^{2}	3.14×10^{2}	3.77×10^{2}	4.40×10^{2}
	Pull	40.2	60.3	80.4	1.21×10^{2}	1.61×10^{2}	2.01×10^{2}	2.41×10^{2}	2.81×10^{2}
ø25	Push	98.2	1.47×10^{2}	1.96×10^{2}	2.95×10^{2}	3.93×10^{2}	4.91×10^{2}	5.89×10^{2}	6.87×10^{2}
	Pull	67.4	1.01×10^{2}	1.35×10^{2}	2.02×10^{2}	2.70×10^{2}	3.37×10^{2}	4.04×10^{2}	4.72×10^{2}
ø32	Push	1.61×10^{2}	2.41×10^{2}	3.22×10^{2}	4.83×10^{2}	6.43×10^{2}	8.04×10^{2}	9.65×10^{2}	1.13×10^{3}
	Pull	1.21×10^{2}	1.81×10^{2}	2.41×10^{2}	3.62×10^{2}	4.83×10^{2}	6.03×10^{2}	7.24×10^{2}	8.44×10^{2}

LCM
LCR
LCG
LCW
LCX
STM
STG
STS/STL
STR2
UCA2
ULK*
JSK/M2
JSG
JSC3/JSC4
USSD
UFCD
USC
UB
JSB3
LMB
LML
HCM
HCA
LBC
CAC4
UCAC2
CAC-N
UCAC-N
RCS2
RCC2
PCC
SHC
MCP
GLC
MFC
BBS
RRC
GRC
RV3*
NHS
HRL
LN
Hand
Chuk
MecHnd/Chuk
ShkAbs
FJ
FK
SpdContr
Ending

How to order

● Without switch (built-in magnet for switch)

STR2 - M F - 16 ( ) - 30 ——— F

● With switch (built-in magnet for switch)

STR2 - M F - 16 ( ) - 30 - K0H - R - F

Model No. Ⓐ Bearing Ⓑ Bore size Ⓒ Port thread Ⓓ Stroke *1 Ⓔ Switch model No. *2 Ⓕ Switch quantity Ⓖ Option

Code	Description
Ⓐ Bearing	
M	Metal bush bearing
B	Ball bearing

Ⓑ Bore size (mm)	
10	ø10
16	ø16
20	ø20
25	ø25
32	ø32

Ⓒ Port thread	
Blank	Rc thread
NN	NPT thread (ø32 only) (made-to-order product)
GN *3	G thread (ø32 only) (made-to-order product)

Ⓓ Stroke (mm)

Bore size	Stroke	Available stroke	Custom stroke
ø10	5 to 50	100	In 1 mm increments
ø16	5 to 100	200	
ø20	5 to 100	200	
ø25	5 to 100	200	
ø32	5 to 100	200	

■ The custom stroke is available in 1 mm increments. However, the total length is the same as that of the next longer standard stroke.

Ⓔ Switch model No.

Straight lead wire	L-shaped lead wire	Contact	Voltage AC	Voltage DC	Indicator	Lead wire
K0H*	K0V*	Reed	●	●	1-color LED	2-wire
K5H*	K5V*	Reed	●	●	no indicator lamp	2-wire
K2H*	K2V*	Proximity		●	1-color LED	2-wire
K3H*	K3V*	Proximity		●	1-color LED	3-wire
K3PH*	K3PV*	Proximity		●	1-color LED (made to order)	3-wire
K2YH*	K2YV*	Proximity		●	2-color LED	2-wire
K3YH*	K3YV*	Proximity		●	2-color LED	3-wire

*** Lead wire length**	
Blank	1 m (standard)
3	3 m (option)
5	5 m (option)

Ⓕ Switch quantity	
R	1 on rod side
H	1 on head side
D	2

Ⓖ Option	
F	End plate material: steel
O	Piping port position 180°

⚠ Precautions for model selection

*1 : The max stroke of rear piping "R" is:
- ø16 : 70 stroke
- ø20/ø25 : 60 stroke
- ø32 : 50 stroke

*2 : STR2-BF-10 is not compatible with reed switch.

*3 : In the case of G thread, ports on the opposite side (option "O") are not available. Rather than plug sealing, they are simply not provided.
(The standard ports are not provided in the case of option "O".)

[Example of model No.]

STR2-MF-16-30-K0H-R-F

Model: Twin rod cylinder, fine speed

Ⓐ Bearing : Metal bush bearing
Ⓑ Bore size : ø16 mm
Ⓒ Port thread : Rc thread
Ⓓ Stroke : 30 mm
Ⓔ Switch model No.: Reed switch K0H, lead wire 1 m
Ⓕ Switch quantity : 1 on rod side
Ⓖ Option : End plate material: steel

How to order switch

Switch body only

SW - K0H*

Switch model No. (Item Ⓔ above)

Clean-room specifications

(Catalog No. CB-033SA)

● Anti-dust generation structure for use in cleanrooms

STR2-B - ····· - P7*

Internal structure

Refer to page 606 for low-speed STR2-$^{M}_{B}$O Series.

Dimensions

Same as STR2 Series (double acting/single rod). Refer to page 590.

Technical data

Refer to Measuring methods (in Pneumatic Cylinders I (Catalog No.CB-029SA) on page 1161), for technical data regarding measuring methods.

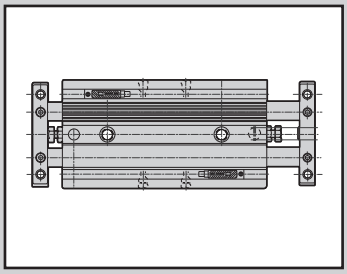

Twin rod cylinder/double acting/double rod

STR2-$^{M}_{B}$D Series

● Bore size: ø6/ø10/ø16/ø20/ø25/ø32

JIS symbol 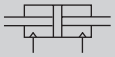

RoHS CAD

Specifications

Item		STR2-MD (metal bush bearing) STR2-BD (ball bearing)					
Bore size mm		ø6	ø10	ø16	ø20	ø25	ø32
Actuation		Double acting/double rod					
Working fluid		Compressed air					
Max. working pressure MPa		0.7 (≈100 psi, 7 bar)					
Min. working pressure MPa		0.25 (≈36 psi, 2.5 bar)	0.2 (≈29 psi, 2 bar)	0.15 (≈22 psi, 1.5 bar)			
Proof pressure MPa		1.05 (≈150 psi, 10.5 bar)					
Ambient temperature °C		-10 (14°F) to 60 (140°F) (no freezing)					
Port size		M5					Rc1/8
Stroke tolerance mm		+2.0 0					
Adjustable stroke range mm		0 to -5					
Working piston speed mm/s		50 to 500					
Non-rotating accuracy (reference value)	STR2-M	±0.4°	±0.3°			±0.2°	
	STR2-B	±0.2°	±0.1°			±0.3°	
Piston rod	STR2-M	Metal bush bearing					
Bearing	STR2-B	Ball bearing					
Cushion		Rubber cushion					
Lubrication		Not required (use turbine oil class 1 ISO VG32 if necessary for lubrication)					
Max absorbed energy J *1	PULL	0.059	0.083	0.083	0.127	0.237	0.311

*1: The allowable absorbed energy of the double rod is for the PULL only.

Stroke

Bore size	Stroke (mm)	Max. stroke (mm)	Min. stroke (mm)	Min. stroke with switch (mm)
ø6	10, 20, 30, 40, 50	50	5	10
ø10				
ø16	10, 20, 30, 40, 50 60, 70, 80, 90, 100	100		
ø20				
ø25				
ø32				

Theoretical thrust table

(Unit: N)

Bore size (mm)	Working pressure MPa						
	0.15	0.2	0.3	0.4	0.5	0.6	0.7
ø6	-	-	9.42	12.6	15.7	18.8	22.0
ø10	-	20.1	30.2	40.2	50.3	60.3	70.4
ø16	36.8	49.0	73.5	98.0	1.23×10^2	1.47×10^2	1.72×10^2
ø20	60.3	80.4	1.21×10^2	1.61×10^2	2.01×10^2	2.41×10^2	2.81×10^2
ø25	1.01×10^2	1.35×10^2	2.02×10^2	2.70×10^2	3.37×10^2	4.04×10^2	4.72×10^2
ø32	1.81×10^2	2.41×10^2	3.62×10^2	4.83×10^2	6.03×10^2	7.24×10^2	8.44×10^2

Switch specifications

● 1-color/2-color LED

Item	Proximity 2-wire		Proximity 3-wire			Reed 2-wire			
	K2H/K2V	K2YH/K2YV	K3H/K3V	K3PH/K3PV (Made to order)	K3YH/K3YV	K0H/K0V		K5H/K5V	
Applications	Dedicated for programmable controller		For programmable controller, relay			For programmable controller, relay		For programmable controller, relay, IC circuit (without indicator lamp), serial connection	
Output method	-		NPN output	PNP output	NPN output	-			
Power supply voltage	-		10 to 28 VDC			-			
Load voltage	10 to 30 VDC		30 VDC or less			12 VDC/24 VDC	110 VAC	5/12/24 VDC	110 VAC
Load current	5 to 20 mA (*3)		50 mA or less			5 to 50mA	7 to 20mA	50 mA or less	20 mA or less
Indicator lamp	LED (Lit when ON)	Red/green LED (Lit when ON)	LED (Lit when ON)	Yellow LED (Lit when ON)	Red/green LED (Lit when ON)	LED (Lit when ON)		-	
Leakage current	1 mA or less		10 μA or less			0mA			
Weight g	1 m: 18 3 m: 49 5 m: 80	1 m: 31 3 m: 85 5 m: 139	1 m: 18 3 m: 49 5 m: 80		1 m: 31 3 m: 85 5 m: 139	1 m: 18 3 m: 49 5 m: 80			

*1 : Refer to Ending Page 1 for detailed switch specifications and dimensions.
*2 : Switches other than the above models, such as switches with connectors, are also available. Refer to Ending Page 1.
*3 : The max. load current is 20 mA at 25°C. The current is lower than 20 mA if the operating ambient temperature around the switch is higher than 25˚C. (5 to 10 mA at 60°C)

Cylinder weight

Unit: g

Bore size	Product weight at 0 mm stroke		Additional weight per S = 10 mm
	STR2-M	STR2-B	
ø6	100	95	13
ø10	185	200	20
ø16	450	475	44
ø20	735	730	60
ø25	1160	1120	82
ø32	1960	2060	115

(Example) Product weight
STR2-MD-6-10-K2H-D

● Product weight for 0 mm stroke...100g

● Additional weight for 10 mm stroke...13 x1=13g

● Weight of 2 cylinder switches =36g

● Product weight……100g+13g+36g=149g

LCM
LCR
LCG
LCW
LCX
STM
STG
STS/STL
STR2
UCA2
ULK*
JSK/M2
JSG
JSC3/JSC4
USSD
UFCD
USC
UB
JSB3
LMB
LML
HCM
HCA
LBC
CAC4
UCAC2
CAC-N
UCAC-N
RCS2
RCC2
PCC
SHC
MCP
GLC
MFC
BBS
RRC
GRC
RV3*
NHS
HRL
LN
Hand
Chuk
MecHnd/Chuk
ShkAbs
FJ
FK
SpdContr
Ending

How to order

Without switch (built-in magnet for switch)

STR2 - M D - 16 ◯ - 30 ——— O

With switch (built-in magnet for switch)

STR2 - M D - 16 ◯ - 30 - K0H - R - O

Model No.

Ⓐ Bearing

Code	Description
Ⓐ Bearing	
M	Metal bush bearing
B	Ball bearing

Ⓑ Bore size

Ⓑ Bore size (mm)	
6	ø6
10	ø10
16	ø16
20	ø20
25	ø25
32	ø32

Ⓒ Port thread

Ⓒ Port thread		
Blank	Rc thread	
NN	NPT thread (ø32 only) (made-to-order product)	
GN	G thread (ø32 only) (made-to-order product)	*3

Ⓓ Stroke
Refer to page 612 for the min. stroke.

Ⓓ Stroke (mm)		
10	10	ø6 to ø32
20	20	
30	30	
40	40	
50	50	
60	60	ø16 to ø32
70	70	
80	80	
90	90	
100	100	

Ⓔ Switch model No.
*1

Ⓔ Switch model No.

Straight lead wire	L-shaped lead wire	Contact	Voltage AC	Voltage DC	Indicator	Lead wire
K0H*	**K0V***	Reed	●	●	1-color LED	2-wire
K5H*	**K5V***		●	●	No indicator lamp	
K2H*	**K2V***	Proximity		●	1-color LED	2-wire
K3H*	**K3V***			●		3-wire
K3PH*	**K3PV***			●	1-color LED (made to order)	3-wire
K2YH*	**K2YV***			●	2-color LED	2-wire
K3YH*	**K3YV***			●		3-wire

*** Lead wire length**	
Blank	1 m (standard)
3	3 m (option)
5	5 m (option)

Ⓕ Switch quantity

Ⓕ Switch quantity	
R	1 on rod side
H	1 on head side
D	2

Ⓖ Option
*2

Ⓖ Option	
F	End plate material: steel
O	Piping port position on the 180° opposite side

⚠ Precautions for model No. selection

*1 : STR2-B-6 and 10 are not compatible with a reed switch.
*2 : The piping port positions for "O" are as shown in the figure below.

Piping port positions for standard (blank)

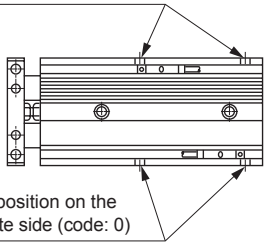

Piping port position on the 180° opposite side (code: 0)

*3 : In the case of G thread, ports on the opposite side (option "O") are not available. Rather than plug sealing, they are simply not provided. (The standard ports are not provided in the case of option "O".)

[Example of model No.]

STR2-MD-16-30-K0H-R-O

Model: Twin rod cylinder, double rod

Ⓐ Bearing : Metal bush bearing
Ⓑ Bore size : ø16 mm
Ⓒ Port thread : Rc thread
Ⓓ Stroke : 30 mm
Ⓔ Switch model No.: Reed K0H switch
Ⓕ Switch quantity : 1 on rod side
Ⓖ Option : Piping port position on the 180° opposite side

How to order switch

SW - K0H*

Switch model No.
(Item Ⓔ above)

Internal structure and parts list (metal bush bearing)

● Double rod

STR2-MD

● Piping port position on the 180° opposite side

STR2-MD ··· -O

ø6, ø10

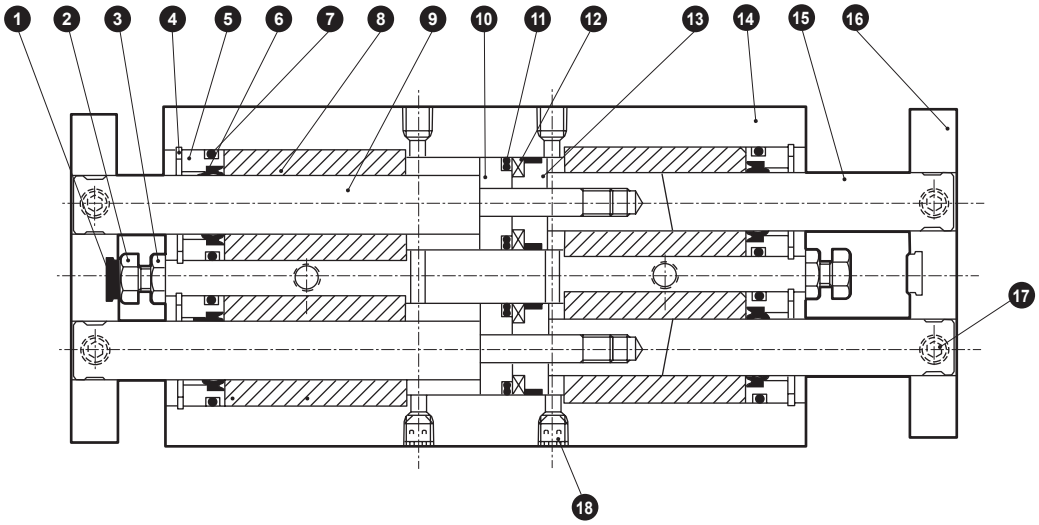

ø16, ø32

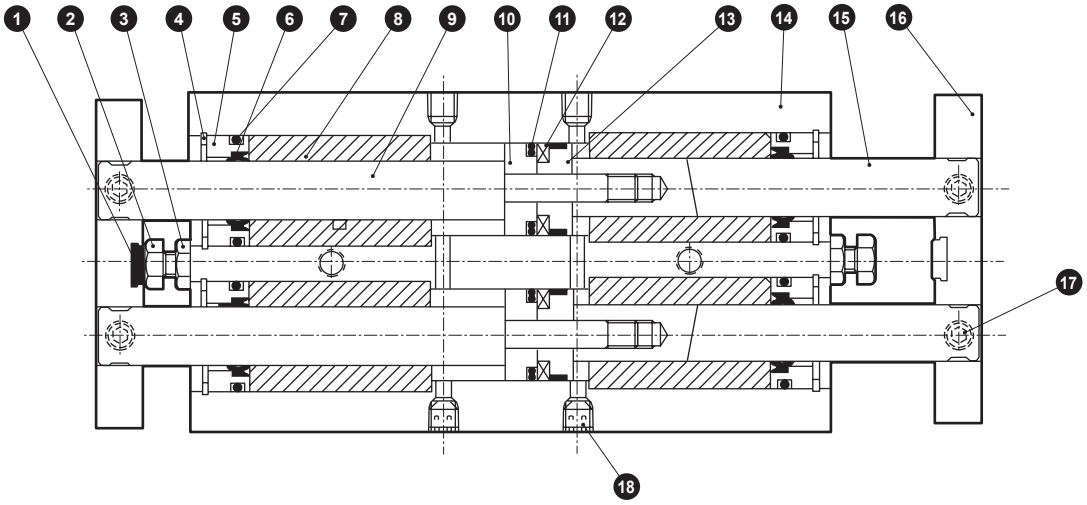

No.	Part name	Material	Remarks	No.	Part name	Material	Remarks
1	Cushion rubber (H)	Urethane rubber		10	Piston	Aluminum alloy	Chromate
2	Hexagon head bolt	Stainless steel		11	Piston packing	Nitrile rubber	
3	Hexagon nut	Stainless steel		12	Magnet	Plastic	
4	Snap ring for hole	Stainless steel		13	Spacer	Aluminum alloy	Chromate
5	Housing	Aluminum alloy	Chromate	14	Cylinder body	Aluminum alloy	Hard alumite
6	Rod packing	Nitrile rubber		15	Piston rod (B)	Stainless steel (ø6 to ø20) Steel (ø25, ø32)	Industrial chrome plating (ø16 to ø32)
7	O-ring	Nitrile rubber					
8	Bush	Aluminum alloy		16	End plate *1	Aluminum alloy	Alumite
9	Piston rod (A)	Stainless steel (ø6 to ø20) Steel (ø25, ø32)	Industrial chrome plating (ø16 to ø32)	17	Hexagon socket set screw	Stainless steel	
				18	Hexagon socket set screw	Stainless steel	

*1 : The steel end plate is zinc chromate.

Repair parts list

Bore size (mm)	Kit No.	Repair parts No.
ø 6	STR2-D-6K	❶ ❻ ❼ ⓫
ø10	STR2-D-10K	
ø16	STR2-D-16K	
ø20	STR2-D-20K	
ø25	STR2-D-25K	
ø32	STR2-D-32K	

Note: Specify the kit No. when placing an order.

LCM
LCR
LCG
LCW
LCX
STM
STG
STS/STL
STR2
UCA2
ULK*
JSK/M2
JSG
JSC3/JSC4
USSD
UFCD
USC
UB
JSB3
LMB
LML
HCM
HCA
LBC
CAC4
UCAC2
CAC-N
UCAC-N
RCS2
RCC2
PCC
SHC
MCP
GLC
MFC
BBS
RRC
GRC
RV3*
NHS
HRL
LN
Hand
Chuk
MecHnd/Chuk
ShkAbs
FJ
FK
SpdContr
Ending

Internal structure and parts list (ball bearing)

● Double rod

STR2-BD

● Piping port position on the 180° opposite side

STR2-BD ··· -O

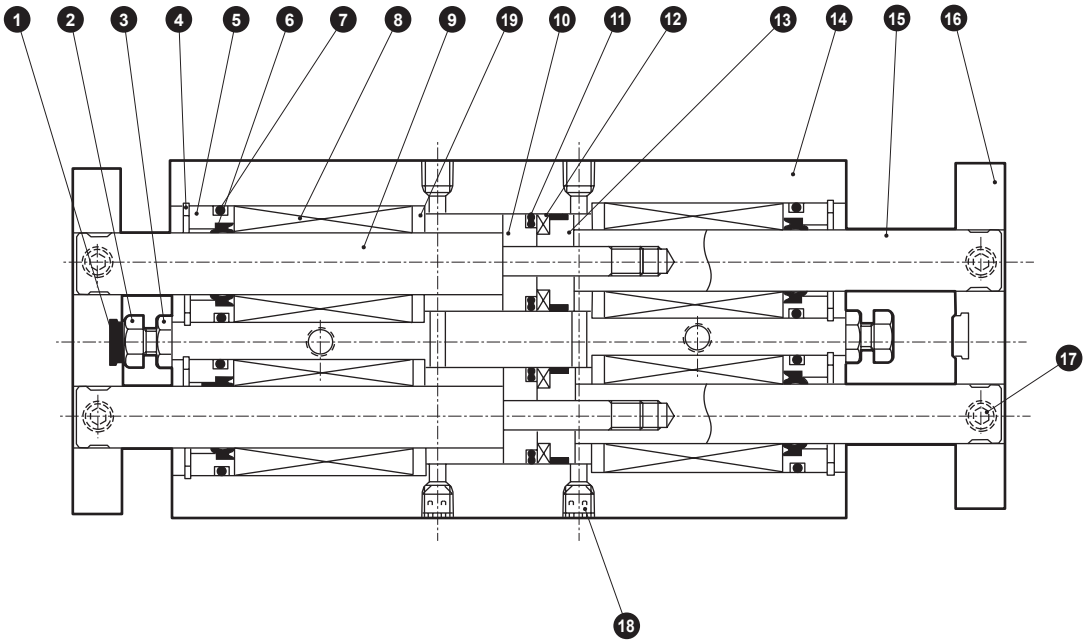

No.	Part name	Material	Remarks	No.	Part name	Material	Remarks
1	Cushion rubber (H)	Urethane rubber		10	Piston	Aluminum alloy	Chromate
2	Hexagon head bolt	Stainless steel		11	Piston packing	Nitrile rubber	
3	Hexagon nut	Stainless steel		12	Magnet	Plastic	
4	Snap ring for hole	Stainless steel		13	Spacer	Aluminum alloy	Chromate
5	Housing	Stainless steel (ø6, ø10) Aluminum alloy (ø16 to ø32)	Chromate	14	Cylinder body	Aluminum alloy	Hard alumite
				15	Piston rod (B)	Steel	Industrial chrome plating
6	Rod packing	Nitrile rubber		16	End plate	Aluminum alloy	Alumite
7	O-ring	Nitrile rubber		17	Hexagon socket set screw	Stainless steel	
8	Bearing			18	Hexagon socket set screw	Stainless steel	
9	Piston rod (A)	Steel	Industrial chrome plating	19	Spacer	Aluminum alloy	Chromate

Repair parts list

Bore size (mm)	Kit No.	Repair parts No.
ø 6	STR2-D-6K	❶ ❻ ❼ ⓫
ø10	STR2-D-10K	
ø16	STR2-D-16K	
ø20	STR2-D-20K	
ø25	STR2-D-25K	
ø32	STR2-D-32K	

Note: Specify the kit No. when placing an order.

Dimensions (ø6 to ø32)

CAD

● Double rod (D), piping port position on the 180° opposite side (O)

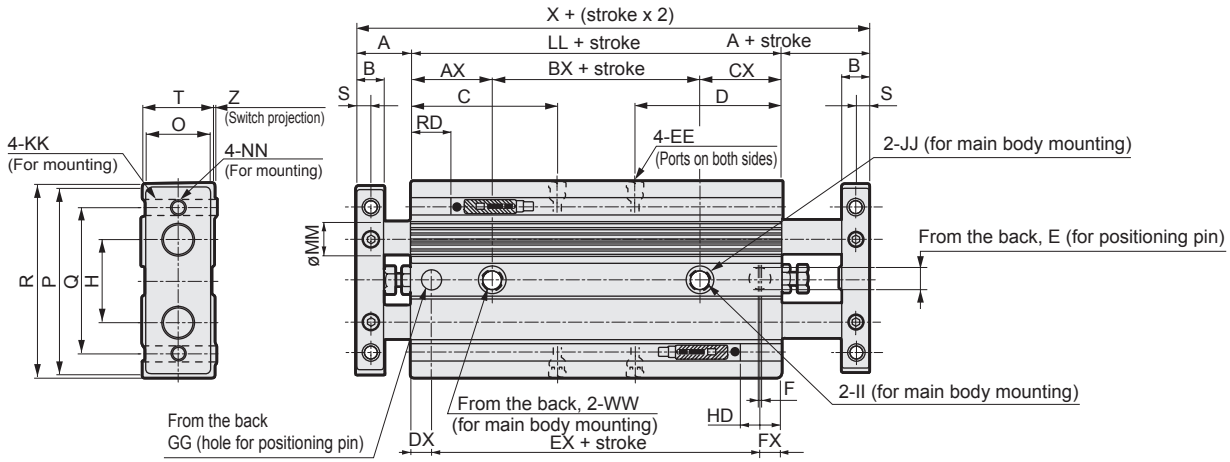

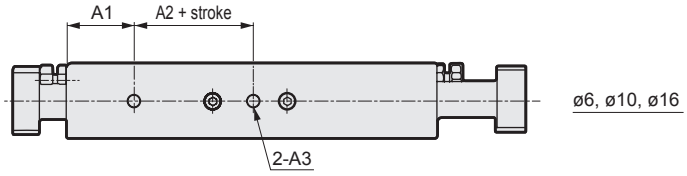

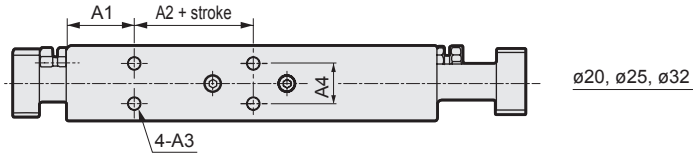

*1 : HD and RD dimensions for 10 mm stroke differ from these dimensions according to the setting.
*2 : Refer to page 619 for HD, RD and protruding dimensions of the 2-color LED switch.
*3 : STR2-B-6 and 10 are not compatible with K0 and K5 reed switches.
*4 : The cylinder may tilt due to the uneven surface if it is installed with the spot face side (JJ) contacted. In this case, change the port position or use the option of piping port position on the 180° opposite side (O) to keep the spot face side from being the contacting surface.

Code	Basic dimensions																	
Bore size (mm)	A	B	C	D	E	EE	F	GG	H	II	JJ	KK	LL	MM	NN	O	P
ø 6	12	6	24.5	24.5	$4^{+0.07}_{+0.02}$ depth 4	M5	1	$4^{+0.07}_{+0.02}$ depth 4	14	3.4	6.5 spot face depth 3.3	M3 through	61	4	M3 through	11	34
ø10	14	6	35	35	$4^{+0.07}_{+0.02}$ depth 4	M5	1	$4^{+0.07}_{+0.02}$ depth 4	20	4.3	8 spot face depth 4.4	M4 through	82.5	6	M4 through	13	42
ø16	16	8	43	43	$6^{+0.07}_{+0.02}$ depth 6	M5	1	$6^{+0.07}_{+0.02}$ depth 6	25	4.3	8 spot face depth 4.4	M5 through	99	10	M5 through	19	52
ø20	20	10	46	46	$6^{+0.07}_{+0.02}$ depth 6	M5	1	$6^{+0.07}_{+0.02}$ depth 6	28	5.2	9.5 spot face depth 5.4	M5 through	108	12	M5 through	24	60
ø25	22	12	44	44	$6^{+0.07}_{+0.02}$ depth 6	M5	1	$6^{+0.07}_{+0.02}$ depth 6	34	6.3	11 spot face depth 6.5	M6 through	108	14	M6 through	30	70
ø32	22	12	56	56	$6^{+0.07}_{+0.02}$ depth 6	Rc 1/8	1	$6^{+0.07}_{+0.02}$ depth 6	44	6.3	11 spot face depth 6.5	M6 through	133	16	M6 through	36	94

Code																		K0/K5/K2/K3	
Bore size (mm)	Q	R	S	T	WW	X	AX	BX	CX	DX	EX	FX	Z	A1	A2	A3	A4	HD	RD
ø 6	29	36	3	13	M4 depth 5	85	20	21	20	7	47	7	1.0	15	10	M3 depth 4	-	20.5 *1	21 *1
ø10	36	44	3	15	M5 depth 6	110.5	24	34.5	24	8	65.5	9	1.0	15	20	M3 depth 3.5	-	30.5 *1	32.5 *1
ø16	45	58	4	21	M5 depth 6	131	24	51	24	8	83	8	0.5	20	25	M4 depth 4	-	39	40.5
ø20	50	62	5	27	M6 depth 8	148	24	60	24	9	90	9	0.5	20	30	M4 depth 4	13	43	45
ø25	60	72	6	33	M8 depth 8	152	24	60	24	9	90	9	0.5	20	30	M5 depth 6	18	43.5	44.5
ø32	75	96	6	38	M8 depth 8	177	24	85	24	9	115	9	0.5	20	40	M5 depth 8	24	55.5	57.5

LCM
LCR
LCG
LCW
LCX
STM
STG
STS/STL
STR2
UCA2
ULK*
JSK/M2
JSG
JSC3/JSC4
USSD
UFCD
USC
UB
JSB3
LMB
LML
HCM
HCA
LBC
CAC4
UCAC2
CAC-N
UCAC-N
RCS2
RCC2
PCC
SHC
MCP
GLC
MFC
BBS
RRC
GRC
RV3*
NHS
HRL
LN
Hand
Chuk
MecHnd/Chuk
ShkAbs
FJ
FK
SpdContr
Ending

STR2 Series with switch common dimensions (2-color LED switch)

● Standard, low speed (O), position locking (Q), fine speed (F), end plate material: steel (F)
rear piping (R), copper and PTFE free (P6), piping port position on the 180° opposite side (O)

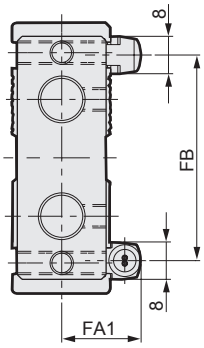

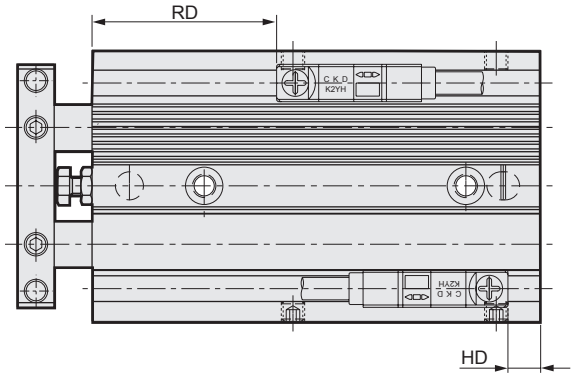

● 2-color LED K□YH/V

Code / Bore size (mm)	FA	FB	RD				HD			
			STR2-$^{M}_{B}$ STR2-$^{M}_{B}$O STR2-$^{M}_{B}$-F STR2-$^{M}_{B}$-P6 STR2-$^{M}_{B}$-O	STR2-$^{M}_{B}$-R	STR2-$^{M}_{B}$-Q-H	STR2-$^{M}_{B}$-Q-R	STR2-$^{M}_{B}$ STR2-$^{M}_{B}$O STR2-$^{M}_{B}$-F STR2-$^{M}_{B}$-P6 STR2-$^{M}_{B}$-O	STR2-$^{M}_{B}$-R	STR2-$^{M}_{B}$-Q-H	STR2-$^{M}_{B}$-Q-R
ø6	13.5	24	20	20	-	-	2.5	12.5	-	-
ø10	14.5	34	32	32	-	-	1	11	-	-
ø16	17	44	38.5	38.5	38.5	68.5	5.5	15.5	35.5	5.5
ø20	20	49	44	44	44	74	9.5	19.5	39.5	9.5
ø25	23	58	42.5	42.5	42.5	72.5	10.5	20.5	40.5	10.5
ø32	25.5	71	54.5	54.5	54.5	84.5	14.5	24.5	44.5	14.5

STR2 Series with switch common dimensions (2-color LED switch)

● Double rod (D)

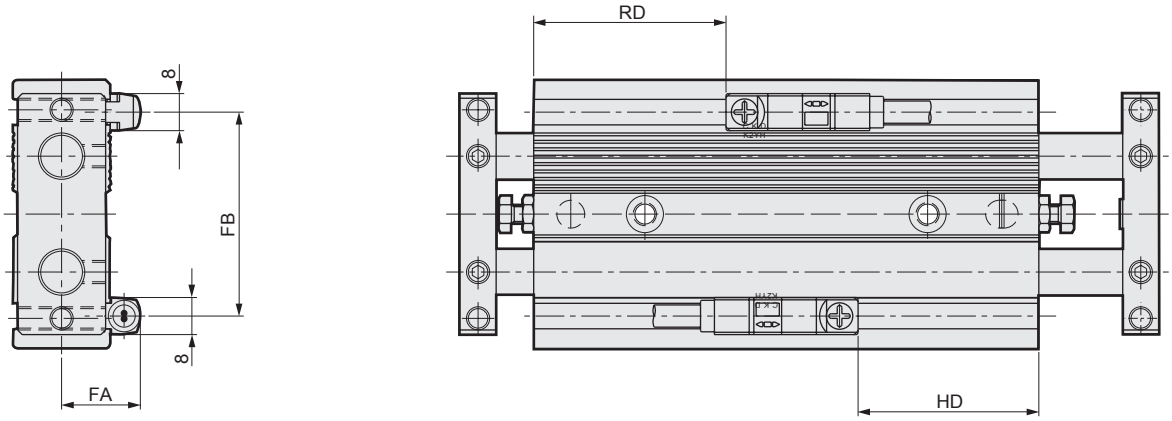

● 2-color LED K□YH/V

Code / Bore size (mm)	FA	FB	RD	HD
ø6	13.5	24	20	19.5
ø10	14.5	34	31	29
ø16	17	44	39	38
ø20	20	49	44	42
ø25	23	58	43.5	42.5
ø32	25.5	71	56.5	54.5

As the selection conditions are different from those of general air cylinders, confirm whether the model is adequate or not according to the selection guide.

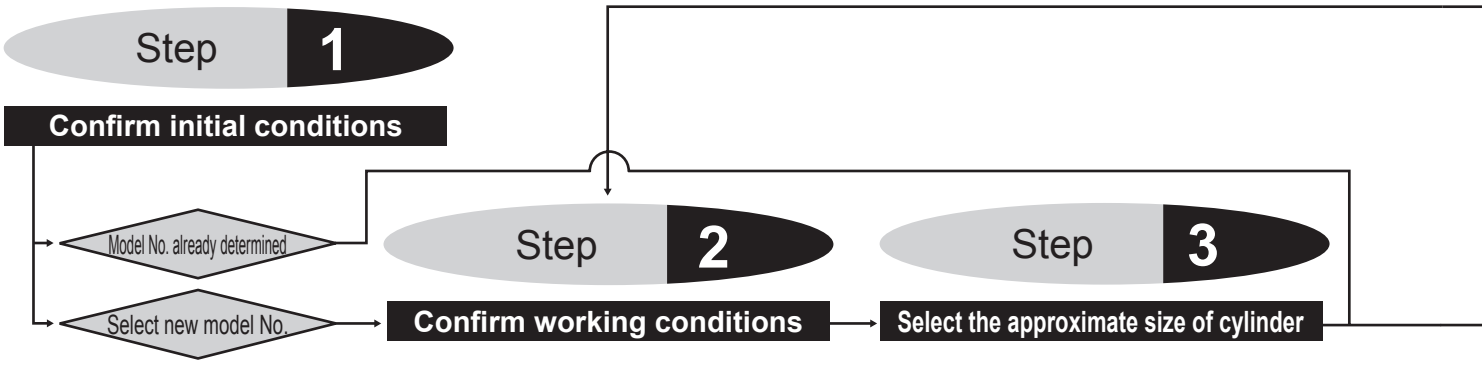

Step 2 Confirm working conditions

1. Working pressure P (MPa)
2. Total applied load W(N)
   (Total applied load)
   W = (Applied load) + (Jig load) + (Self-weight of movable part: Fa). Table 1 shows the formula of the self weight of movable parts.

Table 1 Formula of the self weight of movable parts

Tube	Fa: Self-weight of movable part (N)
	STR2
ø6	0.16+0.002ST
ø10	0.38+0.004ST
ø16	1.08+0.013ST
ø20	1.66+0.013ST
ø25	2.82+0.025ST
ø32	4.33+0.025ST

3. Mounting orientation
   [Actuation]
   Horizontal, vertical-rise, vertical-decline
4. Stroke ST (mm)
5. Operation time t(s)
6. Operation speed V (mm/s)
   Formula of cylinder average operation speed Va
   Va=ST /t (mm/s)

Step 3 Select the approximate size of cylinder

● Formula for calculating cylinder size (bore size)

$$F = \pi/4 \times D^2 \times P$$

$$\therefore D = \sqrt{4F/\pi P}$$

D: Cylinder bore size (mm)
P: Working pressure (MPa)
F: Cylinder theoretical thrust (N)

● When calculating from the theoretical thrust table

Approximate required thrust ≥ Applied load x 2
("x 2" in "Applied load x 2" is for when the load factor is approx. 50% as a safety coefficient)

[Example] Working pressure 0.5(MPa)
Applied load 25(N)
Required thrust: 25(N)×2=50(N)
The bore size selected from Table 2 with theoretical thrust of 50 N and over at working pressure of 0.5 MPa will be ø10 or more.
D=ø10

[Cylinder theoretical thrust]

Table 2 Cylinder theoretical thrust table

Theoretical thrust table Unit: N

Bore size (mm)	Operating direction	Working pressure MPa		
		0.1	0.15	0.2
ø6	Push	-	-	11.3
	Pull	-	-	6.28
ø10	Push	-	-	31.4
	Pull	-	-	20.1
ø16	Push	40.2	60.3	80.4
	Pull	24.5	36.8	49.0
ø20	Push	62.8	94.2	1.26×10^2
	Pull	40.2	60.3	80.4
ø25	Push	98.2	1.47×10^2	1.96×10^2
	Pull	67.4	1.01×10^2	1.35×10^2
ø32	Push	1.61×10^2	2.41×10^2	3.22×10^2
	Pull	1.21×10^2	1.81×10^2	2.41×10^2

*Refer to page 580 for the theoretical thrust table.

Step 4

Calculate the total applied load (W) and each moment

To the next page

Step 4 Calculate the total applied load (W) and each moment

● Calculate the static load(W_0) and the moment (M) based on the load mounted on the cylinder.

W_0 = (Applied load) + (Jig load) (N)

$M_1 = F_1 \times \ell_1$ (N·m)

$M_2 = F_2 \times \ell_2$ (N·m)

$M_3 = F_3 \times \ell_3$ (N·m)

For values of F_1, F_2 and F_3, use those shown in Fig. 2.

Fig. 2 Formula for calculating each moment
Calculate each moment from the applied load, inertia force coefficient and eccentric distance.

[Bending moment]

$M_1 = F_1 \times \ell_1 = 10 \times m_1 \times G \times \ell_1$

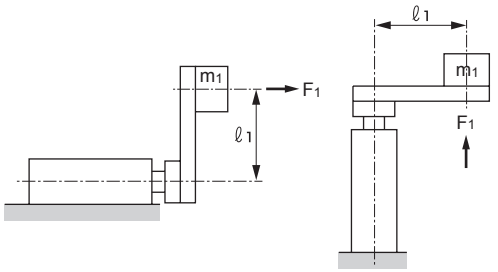

[L-shaped moment]

$M_2 = F_2 \times \ell_2 = 10 \times m_2 \times G \times \ell_2$

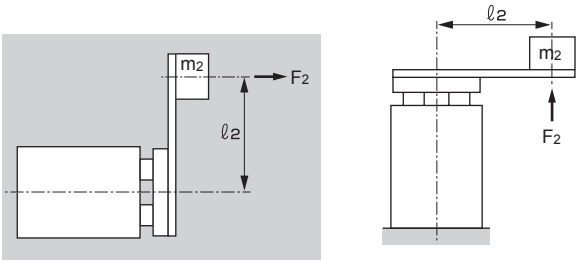

[Torsion moment]

$M_3 = F_3 \times \ell_3 = 10 \times m_3 \times \ell_3$

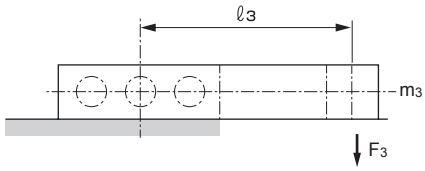

m_1, m_2, m_3: Load weight (kg)

ℓ_1, ℓ_2, ℓ_3: Eccentric distance (m)

G : Inertia force coefficient

Fig. 3 Trend of inertia force coefficient for guided cylinder

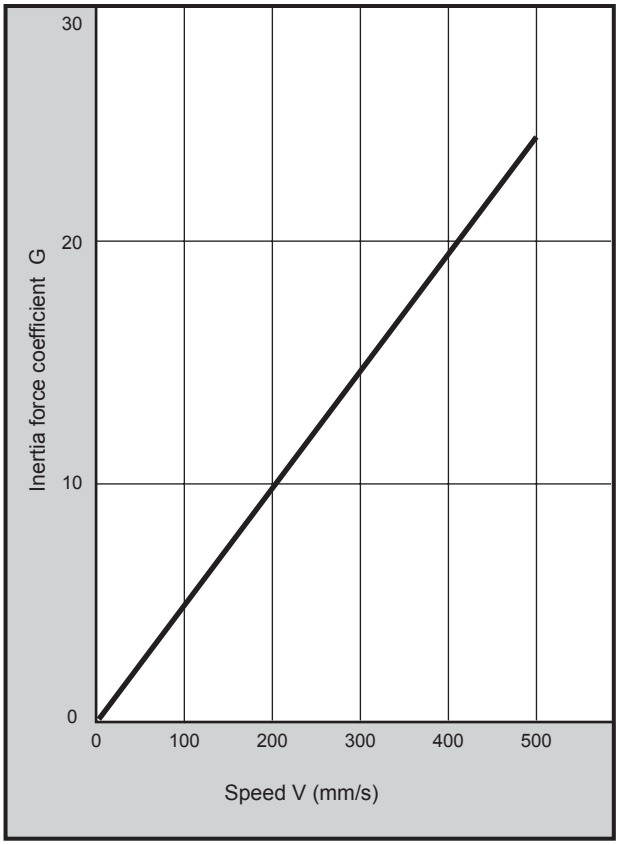

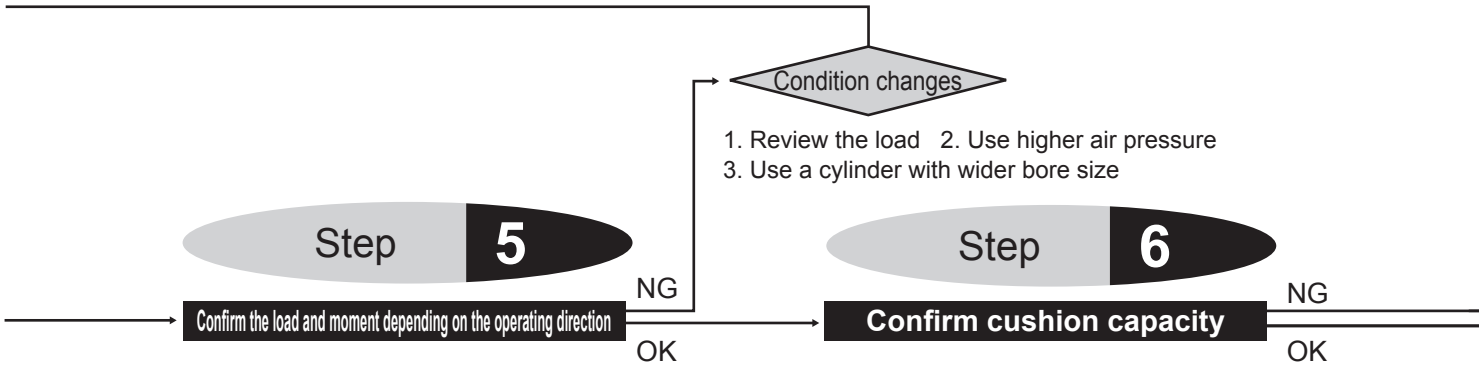

Step 5 Confirm the load and moment depending on the operating direction

5-1 Confirm applied load

❶ For horizontal operation

The value of static applied load must be the allowable load value or less.

Static applied load Wo Value obtained in Step 4
Allowable lateral load Wmax Select from Table 3 depending on the stroke

(When using a custom stroke, select the longer standard stroke)

Wo≤Wmax

Table 3 Allowable lateral load

● Metal bush bearing Unit: N

Type	Stroke (mm)			
	10	20	30	40
STR2-M-6	2.4	1.9	1.5	1.3
STR2-M-10	5.8	4.8	4.1	3.5
STR2-M-16	15.9	13.3	11.5	10.1
STR2-M-20	20.3	17.3	15.1	13.4
STR2-M-25	22.1	18.9	16.5	14.7
STR2-M-32	34.9	30.2	26.7	23.9

● Ball bearing Unit: N

Type	Stroke (mm)			
	10	20	30	40
STR2-B-6	2.6	1.9	1.5	1.2
STR2-B-10	6.0	4.4	3.6	3.0
STR2-B-16	11.4	8.5	7.0	5.9
STR2-B-20	12.7	9.6	7.9	6.8
STR2-B-25	14.7	11.1	9.2	7.9
STR2-B-32	24.3	18.5	15.4	13.3

* Refer to page 624 for allowable lateral load.
Also refer to the graphs on pages 625 and 626 for eccentric load.

❷ For vertical operation

The total applied load value must be the value obtained by applying the load factor to the theoretical thrust

● Calculation of load factor

Total applied load W Value obtained in Step 2
Theoretical thrust of cylinder F Select from the theoretical thrust table on page 580 depending on the pressure

$\alpha = W/F \times 100$ (%)

● Determine the load factor by taking into account the status of utilization such as stability margin and service life of the cylinder. For general use, the value within the range in Table 4 is desirable.

Table 4 Appropriate range of load factor (reference value)

Working pressure (MPa)	Load factor (%)
0.1 to 0.3	α ≤ 40
0.3 to 0.6	α ≤ 50
0.6 to 1.0	α ≤ 60

● A lateral load works when an eccentric load is applied.

The lateral load should be within the allowable lateral load in Table 3.

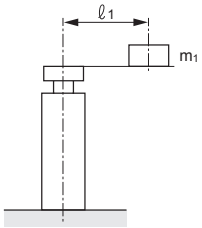

$$\frac{m_1 \times \ell_1 \times 10}{L} \leq W_{max}$$

ST: Stroke (m)

Bore size	L	Bore size	L
ø6	0.022+ST	ø20	0.032+ST
ø10	0.027+ST	ø25	0.034+ST
ø16	0.026+ST	ø32	0.036+ST

5-2 Confirming static moment

❶ Divide the value of bending moment and L-shaped moment by the value in Table 5 to obtain the moment ratio and check that the total value of the moment ratio is 1.0 or less.

● Calculation of moment ratio

Bending moment M_1 } Calculated value
L-shaped moment M_2 } in Step 4

$M_1/M_{1max}+M_2/M_{2max} \leq 1.0$

LCM
LCR
LCG
LCW
LCX
STM
STG
STS/STL
STR2
UCA2
ULK*
JSK/M2
JSG
JSC3/JSC4
USSD
UFCD
USC
UB
JSB3
LMB
LML
HCM
HCA
LBC
CAC4
UCAC2
CAC-N
UCAC-N
RCS2
RCC2
PCC
SHC
MCP
GLC
MFC
BBS
RRC
GRC
RV3*
NHS
HRL
LN
Hand
Chuk
MecHnd/Chuk
ShkAbs
FJ
FK
SpdContr
Ending

Condition changes

1. Install an external shock absorber
2. Decrease the operation speed
3. Use a cylinder with larger bore size

Selection complete

Table 5 Allowable value of moment (N·m)

Bore size	Allowable bending moment $M_{1\,max}/M_{2\,max}$
ø6	3.6
ø10	3.6
ø16	9.2
ø20	9.2
ø25	74
ø32	74

❷ The torsion moment is the allowable torque value or less.thing

Torsion moment M3 Value obtained in Step 4
Allowable torque
M_3 max Select from Table 6 depending on the stroke
(When using a custom stroke, select the longer standard stroke)

$M_3 \leq M_3$ max

Table 6 Allowable torque

● Metal bush bearing (N·m)

Type	Stroke (mm)			
	10	20	30	40
STR2-M-6	0.008	0.006	0.005	0.004
STR2-M-10	0.029	0.024	0.020	0.017
STR2-M-16	0.099	0.083	0.071	0.063
STR2-M-20	0.142	0.121	0.105	0.093
STR2-M-25	0.187	0.160	0.140	0.125
STR2-M-32	0.383	0.332	0.293	0.262

● Ball bearing (N·m)

Type	Stroke (mm)			
	10	20	30	40
STR2-B-6	0.009	0.006	0.005	0.004
STR2-B-10	0.030	0.022	0.018	0.015
STR2-B-16	0.071	0.053	0.043	0.036
STR2-B-20	0.088	0.067	0.055	0.047
STR2-B-25	0.125	0.094	0.078	0.067
STR2-B-32	0.267	0.203	0.169	0.146

* Refer to page 627 for allowable torque.

Step 6 Confirm cushion capacity

Check if the kinetic energy generated by an actual load can be absorbed by the cylinder cushion.

● To obtain the allowable absorbed energy of cylinder (E1), use the value in Table 7.

● Kinetic energy of piston(E_2)formula

$$E_2 = 1/2 \times W \times V^2 \times \frac{1}{10} \text{ (J)}$$

W : Total applied load (N) Value obtained in Step 2

V: Speed of the piston entering the cushion (m/s)

$V = ST/t \times (1 + 1.5 \times \alpha/100)$

ST: stroke (m)

t: Operating time (s)

α: Load factor (%)

Allowable absorbed energy of cylinder

● The kinetic energy absorption performance of the cylinder's cushion depends on the cylinder bore size. For the guided cylinder, use the values in Table 7 for comparison.

Table 7 Allowable absorbed energy value (E_1) of STR2

Bore size	Allowable absorbed energy (J) Rubber cushion	
	push	pull
ø6	0.008	0.059
ø10	0.061	0.083
ø16	0.181	0.083
ø20	0.303	0.127
ø25	0.68	0.237
ø32	1.3	0.311

$E_1 > E_2$

(Allowable absorbed energy) > (Kinetic energy of piston)

Selection complete

$E_1 < E_2$

(Allowable absorbed energy) < (Kinetic energy of piston)

Technical data ❶ Allowable lateral load

LCM
LCR
LCG
LCW
LCX
STM
STG
STS/STL
STR2
UCA2
ULK*
JSK/M2
JSG
JSC3/JSC4
USSD
UFCD
USC
UB
JSB3
LMB
LML
HCM
HCA
LBC
CAC4
UCAC2
CAC-N
UCAC-N
RCS2
RCC2
PCC
SHC
MCP
GLC
MFC
BBS
RRC
GRC
RV3*
NHS
HRL
LN
Hand
Chuk
MecHnd/Chuk
ShkAbs
FJ
FK
SpdContr
Ending

Allowable lateral load

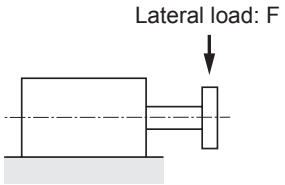

● Metal bush bearing (N)

Type	Stroke (mm)									
	10	20	30	40	50	60	70	80	90	100
STR2-M-6	2.4	1.9	1.5	1.3	1.1	-	-	-	-	-
STR2-M-10	5.8	4.8	4.1	3.5	3.1	-	-	-	-	-
STR2-M-16	15.9	13.3	11.5	10.1	8.9	8.1	7.3	6.7	6.2	5.8
STR2-M-20	20.3	17.3	15.1	13.4	12.1	10.9	10.0	9.2	8.5	7.9
STR2-M-25	22.1	18.9	16.5	14.7	13.1	11.9	10.9	10.1	9.3	8.7
STR2-M-32	34.9	30.2	26.7	23.9	21.6	19.7	18.1	16.8	15.7	14.7

● Ball bearing (N)

Type	Stroke (mm)									
	10	20	30	40	50	60	70	80	90	100
STR2-B-6	2.6	1.9	1.5	1.2	1.0	-	-	-	-	-
STR2-B-10	6.0	4.4	3.6	3.0	2.6	-	-	-	-	-
STR2-B-16	11.4	8.5	7.0	5.9	5.1	4.5	4.0	3.7	3.3	3.0
STR2-B-20	12.7	9.6	7.9	6.8	5.9	5.3	4.7	4.3	3.9	3.6
STR2-B-25	14.7	11.1	9.2	7.9	6.9	6.1	5.5	5.0	4.6	4.2
STR2-B-32	24.3	18.5	15.4	13.3	11.7	10.5	9.5	8.7	8.0	7.4

STR2-D allowable lateral load

● Metal bush bearing (double rod) (N)

Type	Stroke (mm)									
	10	20	30	40	50	60	70	80	90	100
STR2-MD-6	3.3	3.2	3.1	3.0	2.9	-	-	-	-	-
STR2-MD-10	8.0	7.6	7.3	7.1	7.0	-	-	-	-	-
STR2-MD-16	21.7	20.5	19.7	19.1	18.7	18.3	18.0	17.8	17.6	17.5
STR2-MD-20	26.7	25.3	24.3	23.7	23.1	22.7	22.4	22.1	21.9	21.7
STR2-MD-25	29.3	27.8	26.7	26.0	25.4	24.9	24.6	24.3	24.0	23.8
STR2-MD-32	45.2	42.9	41.3	40.1	39.1	38.3	37.7	37.2	36.7	36.3

● Ball bearing (double rod) (N)

Type	Stroke (mm)									
	10	20	30	40	50	60	70	80	90	100
STR2-BD-6	3.7	3.0	2.7	2.5	2.3	-	-	-	-	-
STR2-BD-10	8.6	6.9	6.2	5.7	5.3	-	-	-	-	-
STR2-BD-16	16.6	13.3	11.7	10.7	10.0	9.4	9.0	8.6	8.3	8.0
STR2-BD-20	17.8	14.3	12.6	11.5	10.8	10.2	9.8	9.3	9.0	8.7
STR2-BD-25	20.8	16.7	14.7	13.5	12.6	11.9	11.4	10.9	10.5	10.2
STR2-BD-32	34.5	27.6	24.2	22.1	20.6	19.5	18.5	17.8	17.1	16.6

LCM
LCR
LCG
LCW
LCX
STM
STG
STS/STL
STR2
UCA2
ULK*
JSK/M2
JSG
JSC3/JSC4
USSD
UFCD
USC
UB
JSB3
LMB
LML
HCM
HCA
LBC
CAC4
UCAC2
CAC-N
UCAC-N
RCS2
RCC2
PCC
SHC
MCP
GLC
MFC
BBS
RRC
GRC
RV3*
NHS
HRL
LN
Hand
Chuk
MecHnd/Chuk
ShkAbs
FJ
FK
SpdContr
Ending

Allowable lateral load

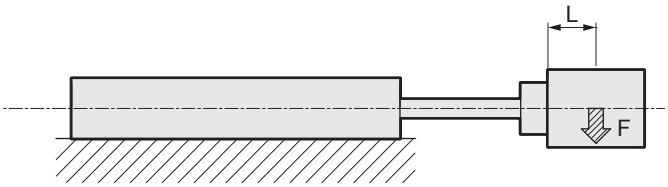

F: Lateral load (kg)
L: Load center of gravity position (mm)

Basic Metal bush bearing

STR2-M-6/10

● When L = 5

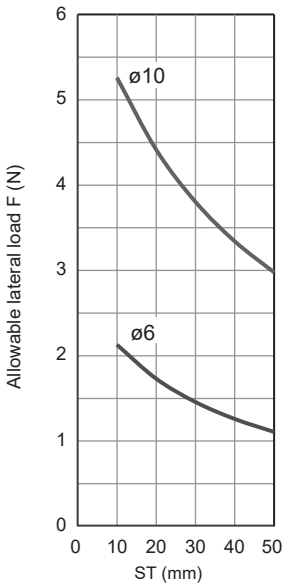

● When L = 15

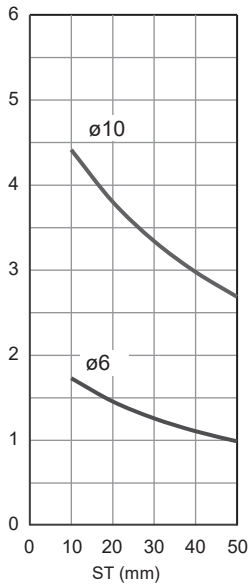

STR2-M-16/20/25/32

● When L = 15

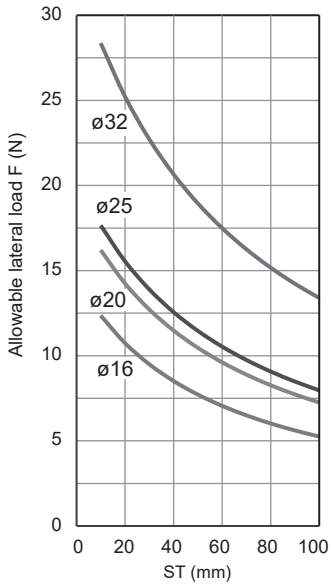

● When L = 30

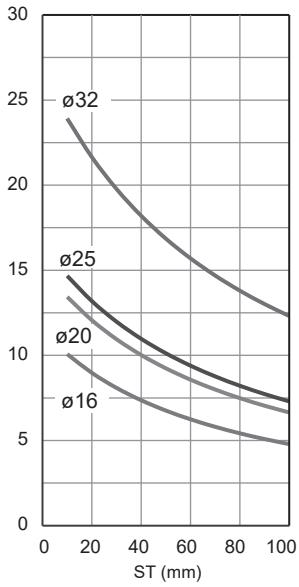

Basic Ball bearing

STR2-B-6/10

● When L = 5

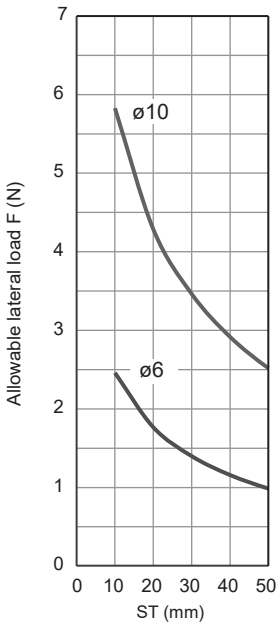

● When L = 15

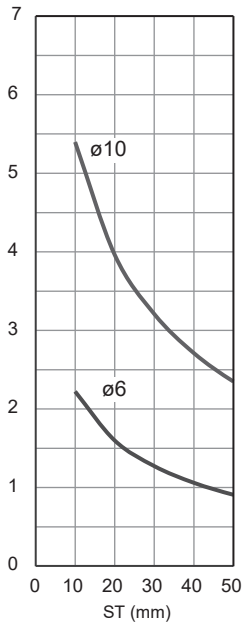

STR2-B-16/20/25/32

● When L = 15

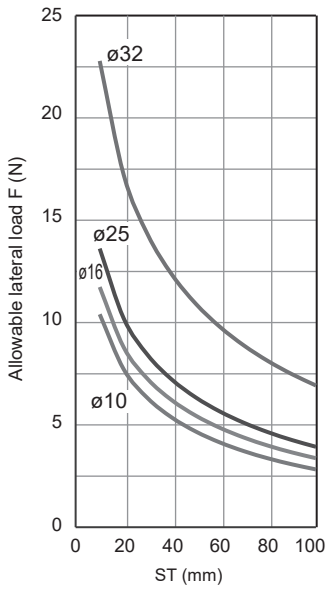

● When L = 30

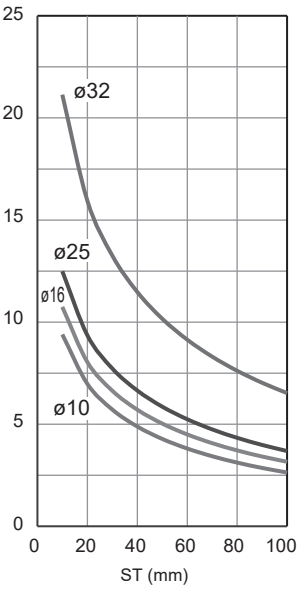

LCM
LCR
LCG
LCW
LCX
STM
STG
STS/STL
STR2
UCA2
ULK*
JSK/M2
JSG
JSC3/JSC4
USSD
UFCD
USC
UB
JSB3
LMB
LML
HCM
HCA
LBC
CAC4
UCAC2
CAC-N
UCAC-N
RCS2
RCC2
PCC
SHC
MCP
GLC
MFC
BBS
RRC
GRC
RV3*
NHS
HRL
LN
Hand
Chuk
MecHnd/Chuk
ShkAbs
FJ
FK
SpdContr
Ending

Allowable lateral load

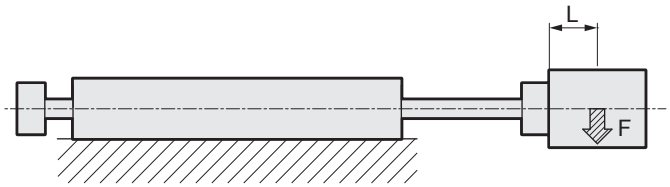

F: Lateral load (kg)
L: Load center of gravity position (mm)

Double rod Metal bush bearing

STR2-MD-6/10

● When L = 5

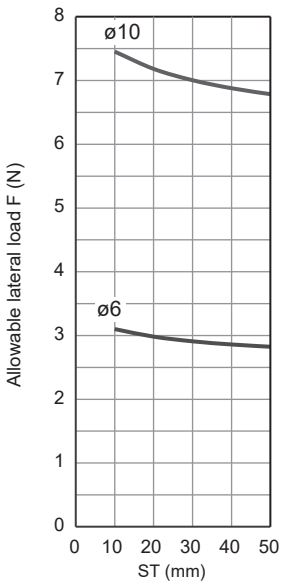

● When L = 15

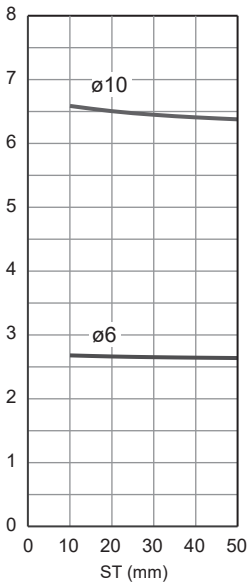

STR2-MD-16/20/25/32

● When L = 15

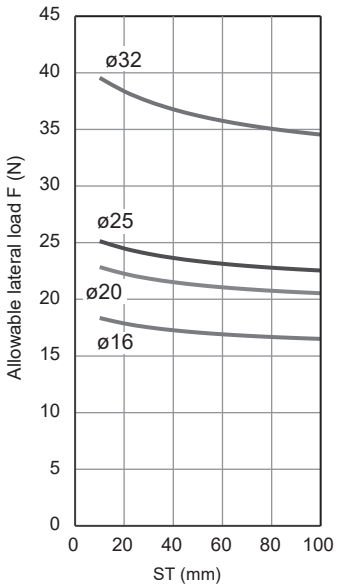

● When L = 30

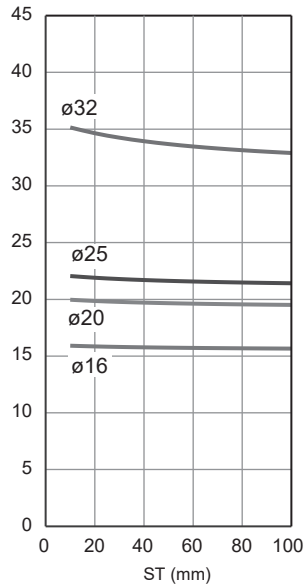

Double rod Ball bearing

STR2-BD-6/10

● When L = 5

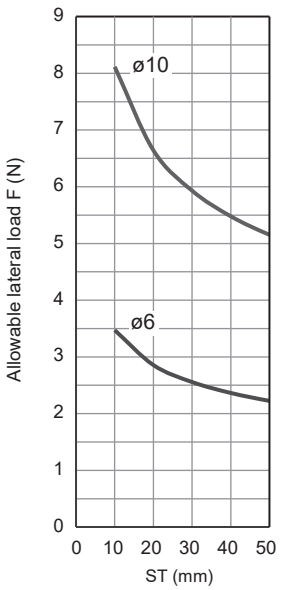

● When L = 15

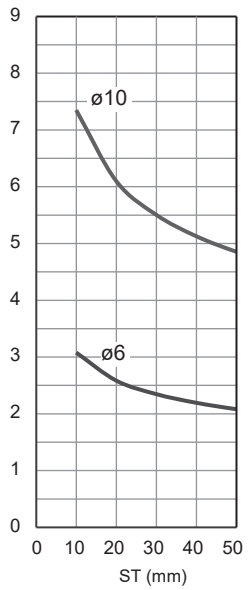

STR2-BD-16/20/25/32

● When L = 15

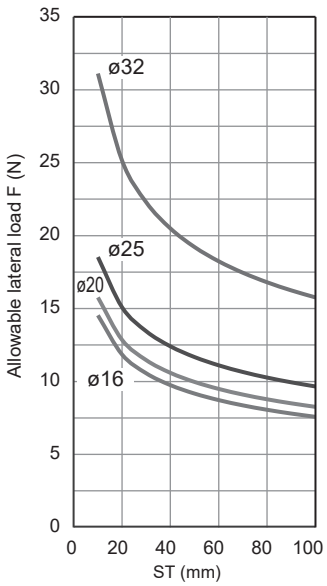

● When L = 30

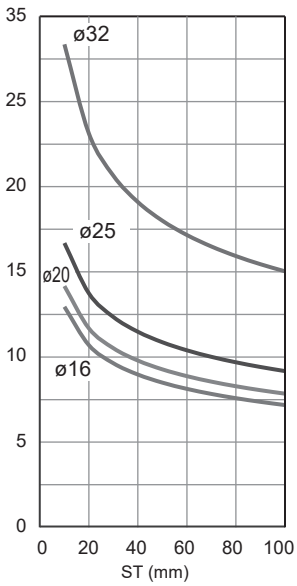

Allowable torque

Torque: T (N·m)

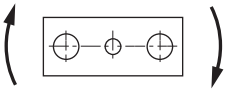

● Metal bush bearing

(N·m)

Type	Stroke (mm)									
	10	20	30	40	50	60	70	80	90	100
STR2-M-6	0.008	0.006	0.005	0.004	0.003	-	-	-	-	-
STR2-M-10	0.029	0.024	0.020	0.017	0.015	-	-	-	-	-
STR2-M-16	0.099	0.083	0.071	0.063	0.055	0.050	0.045	0.041	0.038	0.036
STR2-M-20	0.142	0.121	0.105	0.093	0.084	0.076	0.070	0.064	0.059	0.055
STR2-M-25	0.187	0.160	0.140	0.125	0.111	0.101	0.092	0.085	0.079	0.074
STR2-M-32	0.383	0.332	0.293	0.262	0.237	0.216	0.199	0.184	0.172	0.161

● Ball bearing

(N·m)

Type	Stroke (mm)									
	10	20	30	40	50	60	70	80	90	100
STR2-B-6	0.009	0.006	0.005	0.004	0.003	-	-	-	-	-
STR2-B-10	0.030	0.022	0.018	0.015	0.013	-	-	-	-	-
STR2-B-16	0.071	0.053	0.043	0.036	0.031	0.028	0.025	0.023	0.020	0.018
STR2-B-20	0.088	0.067	0.055	0.047	0.041	0.037	0.032	0.030	0.027	0.025
STR2-B-25	0.125	0.094	0.078	0.067	0.058	0.051	0.046	0.042	0.039	0.035
STR2-B-32	0.267	0.203	0.169	0.146	0.128	0.115	0.104	0.095	0.088	0.081

STR2-D allowable torque

● Metal bush bearing (double rod)

(N·m)

Type	Stroke (mm)									
	10	20	30	40	50	60	70	80	90	100
STR2-MD-6	0.011	0.011	0.010	0.010	0.010	-	-	-	-	-
STR2-MD-10	0.040	0.038	0.036	0.035	0.035	-	-	-	-	-
STR2-MD-16	0.135	0.128	0.123	0.119	0.116	0.114	0.112	0.111	0.110	0.109
STR2-MD-20	0.186	0.177	0.170	0.165	0.161	0.158	0.156	0.154	0.153	0.151
STR2-MD-25	0.249	0.236	0.227	0.221	0.215	0.211	0.209	0.206	0.204	0.202
STR2-MD-32	0.497	0.471	0.454	0.441	0.430	0.421	0.414	0.409	0.403	0.399

● Ball bearing (double rod)

(N·m)

Type	Stroke (mm)									
	10	20	30	40	50	60	70	80	90	100
STR2-BD-6	0.013	0.010	0.009	0.008	0.008	-	-	-	-	-
STR2-BD-10	0.043	0.034	0.031	0.028	0.026	-	-	-	-	-
STR2-BD-16	0.103	0.083	0.073	0.066	0.062	0.055	0.056	0.053	0.051	0.050
STR2-BD-20	0.124	0.100	0.088	0.080	0.075	0.071	0.068	0.065	0.063	0.060
STR2-BD-25	0.176	0.142	0.125	0.114	0.107	0.101	0.096	0.092	0.089	0.086
STR2-BD-32	0.379	0.303	0.266	0.243	0.226	0.214	0.203	0.195	0.188	0.182

LCM
LCR
LCG
LCW
LCX
STM
STG
STS/STL
STR2
UCA2
ULK*
JSK/M2
JSG
JSC3/JSC4
USSD
UFCD
USC
UB
JSB3
LMB
LML
HCM
HCA
LBC
CAC4
UCAC2
CAC-N
UCAC-N
RCS2
RCC2
PCC
SHC
MCP
GLC
MFC
BBS
RRC
GRC
RV3*
NHS
HRL
LN
Hand
Chuk
MecHnd/Chuk
ShkAbs
FJ
FK
SpdContr
Ending

Deflection

(Reference value)

For the inclination that is produced at the end of the end plate when no load is applied, the value in the graph below is used as a guide. (Excluding sag of piston rod)

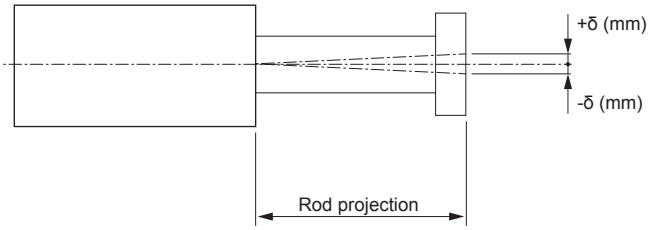

■ STR2-M

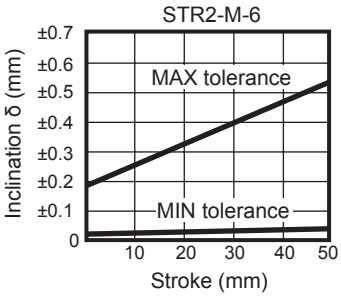

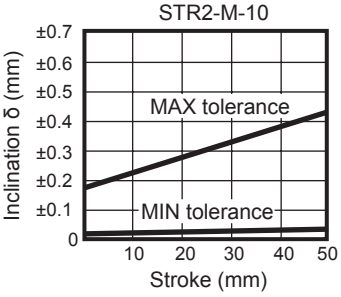

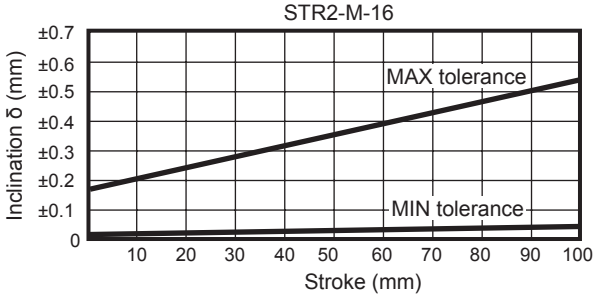

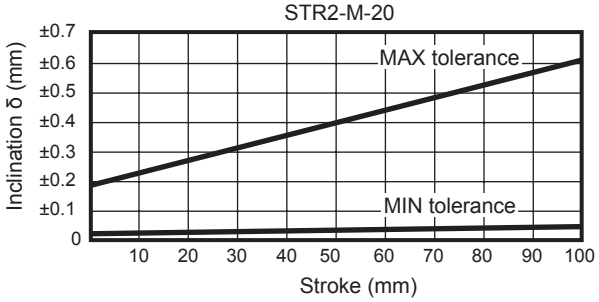

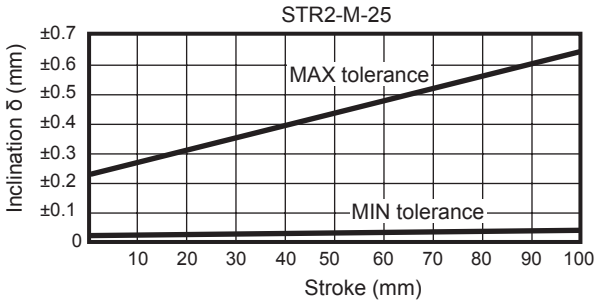

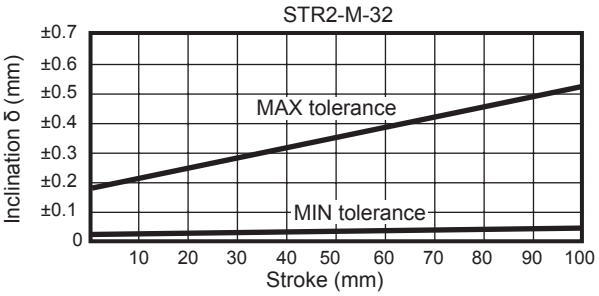

■ STR2-B

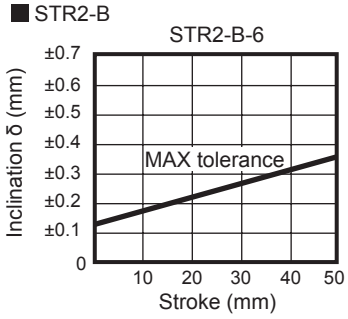

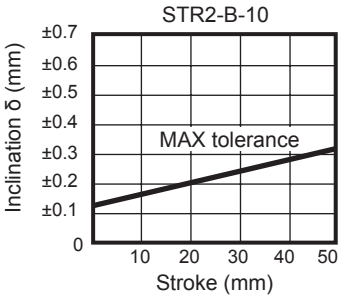

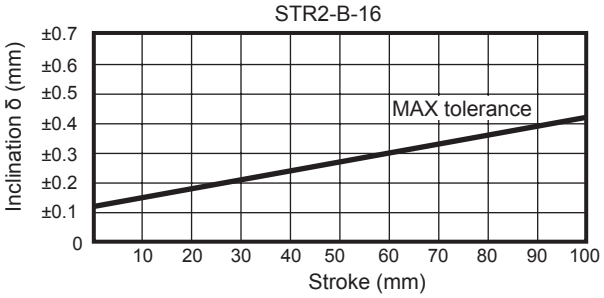

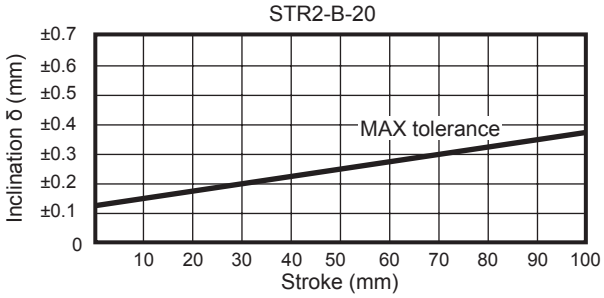

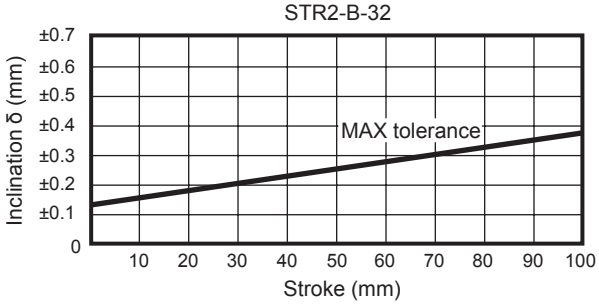

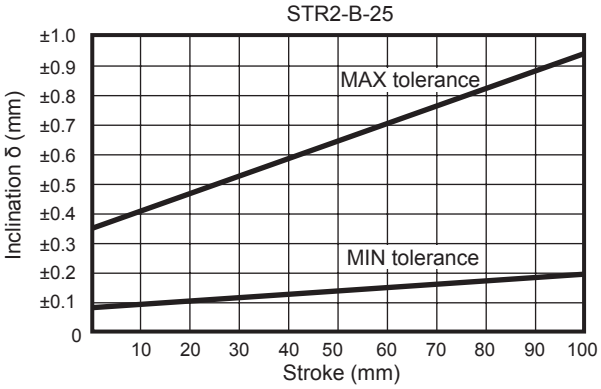

■ STR2-MD

STR2-MD-6

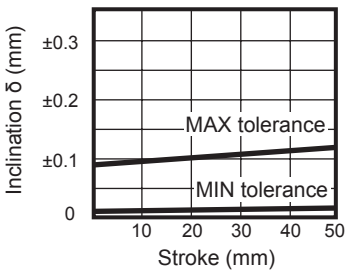

STR2-MD-10

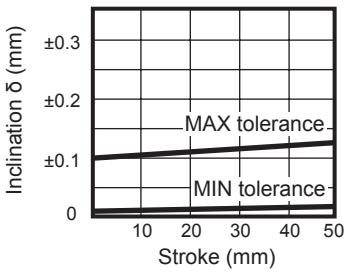

STR2-MD-16

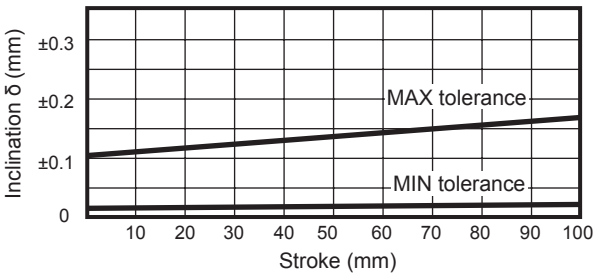

STR2-MD-20

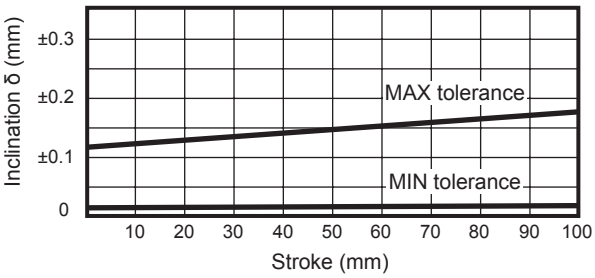

STR2-MD-25

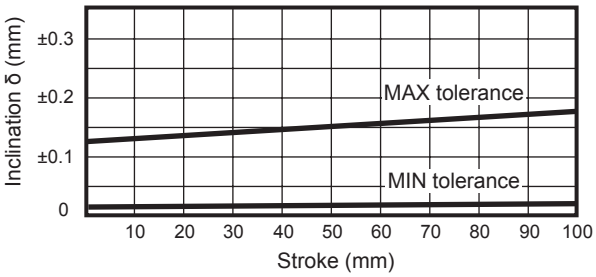

STR2-MD-32

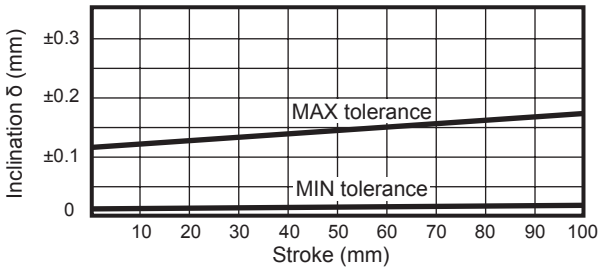

■ STR2-BD

STR2-BD-6

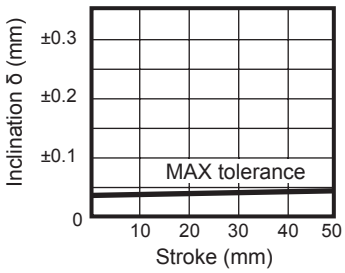

STR2-BD-10

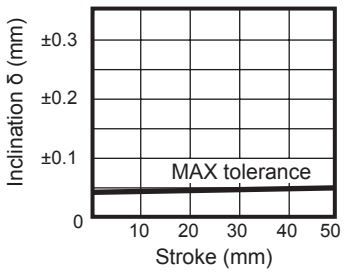

STR2-BD-16

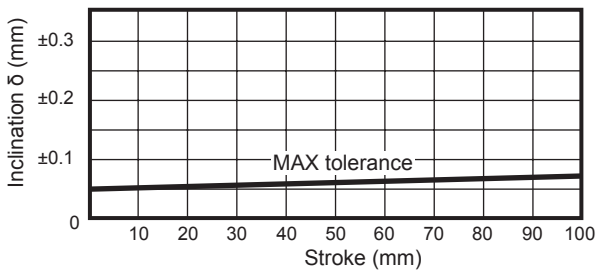

STR2-BD-20

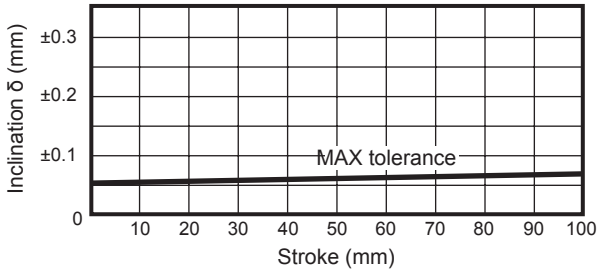

STR2-BD-25

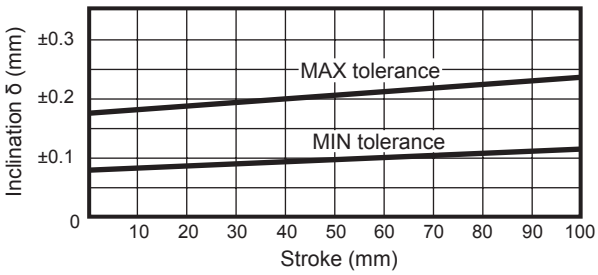

STR2-BD-32

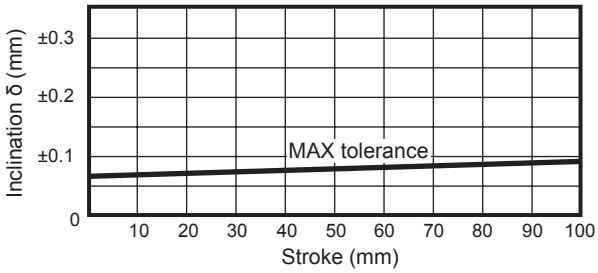

Pneumatic components

Safety Precautions

Be sure to read this section before use.

Refer to Intro Page 73 for general information of the cylinder, and to Intro Page 80 for general information of the cylinder switch.

Product-specific cautions: Twin rod cylinder STR2 Series

Design/selection

1. Position locking STR2-Q

WARNING

- If pressure is supplied to the port on the locking side when both ports are not pressurized and the piston is locked, the lock may not be released or the piston rod may suddenly pop out just after the lock is released. This can be extremely hazardous.
  To release the lock mechanism, make sure to supply pressure to the port on the other side. Check that load is not applied to the lock mechanism.

- For usage where the drop rate is increased using the quick exhaust valve, the lock may not release normally because the cylinder starts operating before the lock mechanism.
  For the position locking cylinder, do not use the quick exhaust valve.
  When stopping the piston with an external buffer device (shock absorber, etc.), adjust it so that there is no bound. If the piston bounds at the stroke end, the sleeve and stopper piston will collide strongly and may result in damage of the locking mechanism.
  Inspect the piston once or twice a year to make sure there is no damage to the retainer caused by this phenomenon.

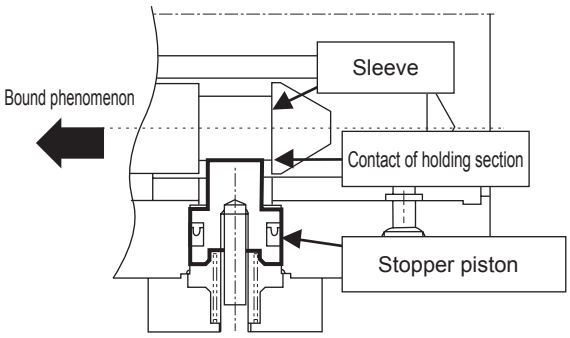

- Do not use 3-position valves.
  Do not use the cylinder in combination with 3-position (especially closed center metal seal) valves. If pressure is trapped in the piston chamber with the lock mechanism, the lock cannot be engaged. Even if it is locked once, the air leaked from the valve enters the cylinder, and the lock may be released after a certain period of time.

CAUTION

- Cylinder load factor must be 50% or less.
  If the load factor is high, the lock may not be released, or the lock section may be damaged.

- If back pressure is applied to the locking mechanism, the lock may be released. Use a single solenoid valve, or an individual exhaust manifold.

- Do not use multiple synchronized cylinders.
  - Do not use so that 1 workpiece is moved by synchronizing 2 or more position locking cylinders. Lock release may fail for one of the cylinders.

2. Fine speed STR2-F

CAUTION

- Use without lubrication.
  Applying lubrication may cause changes in characteristics.

- Assemble the speed controller near the cylinder.
  When installed far from the cylinder, the speed becomes unstable.
  Use SC-M3/M5, SC3W, SCD-M3/M5 and SC3WU Series for the speed controller.

- In general, the speed is stabler at higher air pressure and lower load factor.
  Use at a 50% or less load factor.

- Do not apply a lateral load to the cylinder.
  Also install the sliding guide so that it is not twisted.
  When the load or the resistance fluctuates, operation becomes unstable.
  With a large difference between static friction and kinematic friction of the guide, operation becomes unstable.

- Avoid using this product where vibration is present.
  The product will be adversely affected by vibration and operation will become unstable.

■ Stable speed control is achieved with a meter-out circuit.
When fine speed activation is performed with operating direction PUSH for the single rod cylinder, the popping out phenomenon occurs when operation starts if the load resistance is low. For countermeasures, use the ⓑ, ⓒ or ⓓ circuit.
Note that circuit ⓓ is the most stable.

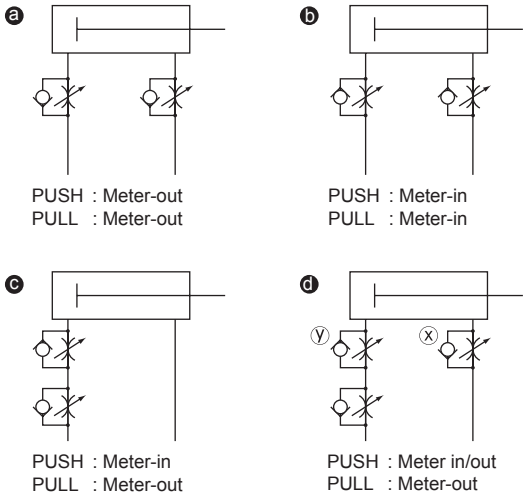

Speed adjustment method for PUSH operation of circuit ⓓ:
1. Set the speed with the speed controller x.
2. Restrict the speed with the speed controller y until there is no popping out.
3. Check the speed again.

(*1) When comparing ⓑ ⓒ ⓓ, the circuit ⓓ is the most stable.

(*2) For vertical mounting, combine the cylinder with a meter-out circuit, as it will fall under its own weight when a meter-in circuit is used.

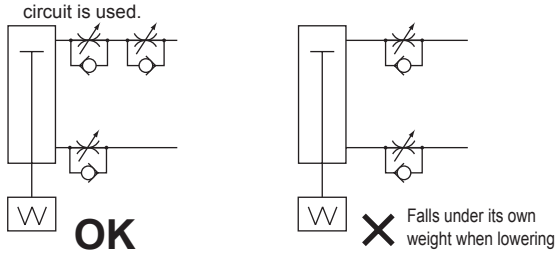

(*3) Use the circuit shown in the figure below for the serial connection of the speed controllers.

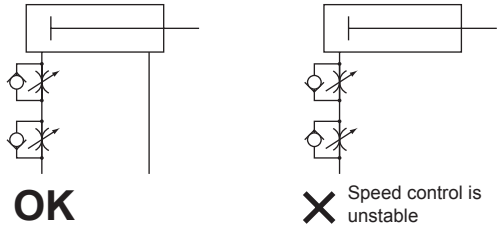

(Guidelines for pop-out generation)
Popping out occurs in the following cases.
· Thrust > Resistance
*Resistance: Thrust caused by residual pressure on the exhaust side (in the fine speed, suction pressure = residual pressure) + { When using horizontally: frictional force caused by load / When using vertically: load self-weight

Mounting, installation and adjustment

1. Common

⚠ CAUTION

■ The twin rod cylinder has two piping ports each on both sides in the operating direction. Change the plugged ports according to your application. After the change, confirm that there is no air leakage from the plugged ports.

■ Do not damage surface flatness by denting or scratching the tube main body mounting surface or the end plate surface in order to increase sliding resistance. Make sure that the flatness of the mating surface where the end plate will be attached is 0.03 mm or below. If it is difficult to ensure the above flatness, insert a shim (customer-provided) between the end plate and workpiece and adjust the clearance. This may prevent an increase in sliding resistance.

■ When mounting the body with the through bolt, tighten with tightening torque as shown in the table below.

Bore size (mm)	Tightening torque
ø6	0.6 to 1.0 N•m
ø10	1.4 to 2.4 N•m
ø16	
ø20	2.9 to 5.1 N•m
ø25	4.8 to 8.6 N•m
ø32	

■ When using screw hole NN of the end plate, make sure that the bolt length is equivalent to the B dimension. Not doing so could cause malfunction or damage of the end plate.

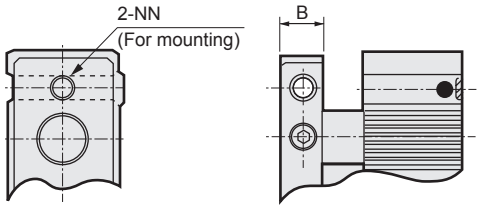

Bore size (mm)	B dimension
ø6	6
ø10	6
ø16	8
ø20	10
ø25	12
ø32	12

LCM
LCR
LCG
LCW
LCX
STM
STG
STS/STL
STR2
UCA2
ULK*
JSK/M2
JSG
JSC3/JSC4
USSD
UFCD
USC
UB
JSB3
LMB
LML
HCM
HCA
LBC
CAC4
UCAC2
CAC-N
UCAC-N
RCS2
RCC2
PCC
SHC
MCP
GLC
MFC
BBS
RRC
GRC
RV3*
NHS
HRL
LN
Hand
Chuk
MecHnd/Chuk
ShkAbs
FJ
FK
SpdContr
Ending

- Rubber cushion is integrated as a cushion mechanism. The table below shows the kinetic energy which can be absorbed by the rubber cushion. If the energy exceeds these values, consider using a separate shock absorber.

Bore size (mm)	Allowable absorbed energy J	
	PUSH	PULL
ø 6	0.008	0.059
ø10	0.061	0.083
ø16	0.181	0.083
ø20	0.303	0.127
ø25	0.68	0.237
ø32	1.3	0.311

- The cylinder may tilt due to the uneven surface if it is installed with the spot face side (JJ) contacted. In this case, change the port position or use the option of piping port position on the 180° opposite side (O) to keep the spot face side from being the contacting surface.

- The cylinder body may be damaged or may malfunction if a unit with excessive inertia, etc., is actuated. Use within the allowable absorbed energy range.

- The twin rod cylinder has a bolt for 0 to -5 mm stroke length adjustment on the piston rod retraction side. Loosen the hexagon nut, adjust to the desired stroke length and tighten the hexagon nut to fix the length.

- Do not use the product with the stroke length adjusting bolt removed.

2. Common; with switch

⚠ CAUTION

- STR2-B-6 and 10 are not compatible with reed switch.
  When using a proximity switch for STR2-B-6, avoid mounting the cylinder on a magnetic substance such as a metal plate. This could lead to switch detection malfunction.

- The cylinder switch may malfunction if there is a magnetic substance such as a metal plate installed adjacently.
  Check that a distance of 20 mm is provided from the surface of the cylinders. (Same clearance for all bore sizes)

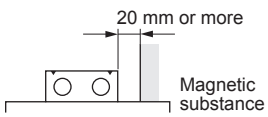

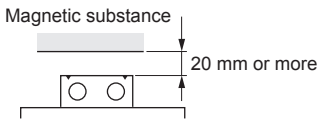

- The cylinder switch may malfunction if cylinders are installed adjacently. Check that the following distances are allocated between cylinders.

Adjacent conditions			Switch	ø6	ø10	ø16	ø20	ø25	ø32
Two cylinders in parallel	Horizontal mounting 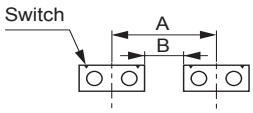	A	K2,K3	43	45	56	66	75	111
			K0,K5	40 *1	47 *1	62	81	85	111
		B	K2,K3	7	1	2	4	3	15
			K0,K5	4 *1	3 *1	8	19	12	15
	Vertical mounting switches are attached on the side of the adjacent cylinders 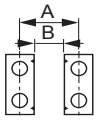	A	K2,K3	28	27	36	47	47	58
			K0,K5	27 *1	26 *1	36	53	53	58
		B	K2,K3	15	12	15	20	14	20
			K0,K5	14 *1	11 *1	15	26	20	20
	Vertical mounting switches are attached on the opposite side of the adjacent cylinders 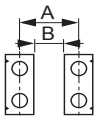	A	K2,K3	19	16	22	28	34	39
			K0,K5	14 *1	16 *1	22	33	34	39
		B	K2,K3	6	1	1	1	1	1
			K0,K5	1 *1	1 *1	1	6	1	1
Three or more cylinders in parallel	Horizontal mounting 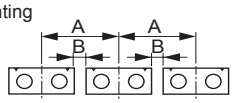	A	K2,K3	44	45	57	67	77	111
			K0,K5	41 *1	47 *1	64	83	86	111
		B	K2,K3	8	1	3	5	5	15
			K0,K5	5 *1	3 *1	10	21	14	15
	Vertical mounting 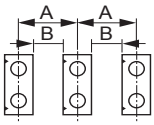	A	K2,K3	33	30	40	51	49	58
			K0,K5	30 *1	28 *1	42	60	97	58
		B	K2,K3	20	15	19	24	16	20
			K0,K5	17 *1	13 *1	21	33	25	20

*1: Dimensions for STR2-M.
STR2-B-6 and 10 are not compatible with reed switch.

3. Position locking STR2-Q

⚠ CAUTION

- The lock mechanism functions at the stroke end, so that if the stopper is engaged during the stroke by the external stopper, the lock mechanism may not work and the piston could fall. When setting a load, make sure to check that the lock mechanism functions before installing the product.

- In the head side position locking, do not change or adjust the stopper bolt to adjust the pull stroke length. Doing so will disable the lock mechanism.

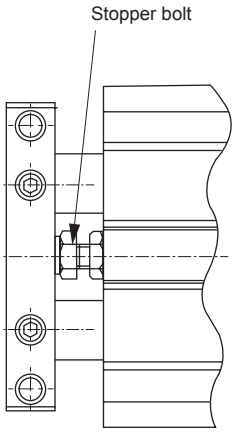

- When the piping at the side where the lock mechanism is provided is long and thin, or when the speed controller is far away from the cylinder port, note that it takes time to engage the lock. Clogging in the silencer mounted on the EXH. port of the solenoid valve may also cause the same result.

4. Fine speed STR2-F

⚠ CAUTION

- Perform adjustment such as centering so that a lateral load is not applied to the cylinder.
  Adjust and install the sliding guide so that it is not twisted.
  - When the load or the resistance fluctuates, operation becomes unstable.
  - With a large difference between static friction and kinematic friction of the guide, operation becomes unstable.

Use/maintenance

1. Position locking STR2-Q

⚠ WARNING

- For safety purposes, prevent the load from falling under its own weight during maintenance.

⚠ CAUTION

- After the locking mechanism is manually operated, make sure to return the locking mechanism to the original state before use. Do not perform manual operation except for adjustment, as it is dangerous.

- When mounting or adjusting the cylinder, release the lock. If mounting work, etc., is done while the lock is engaged, the lock part may be damaged.

- Use the speed controller with meter-out.
  - If the meter-in control is used, the lock may not be releasable.

- How to unlock
  - By screwing the hexagon socket head cap screw (M3 x 20) into the stopper piston and pulling the bolt 3 mm with force of 20 N or more, the stopper piston moves and the lock is released. When the screw is released, the internal spring returns the stopper piston. When the stopper piston fits in the piston rod groove, the cylinder is locked.

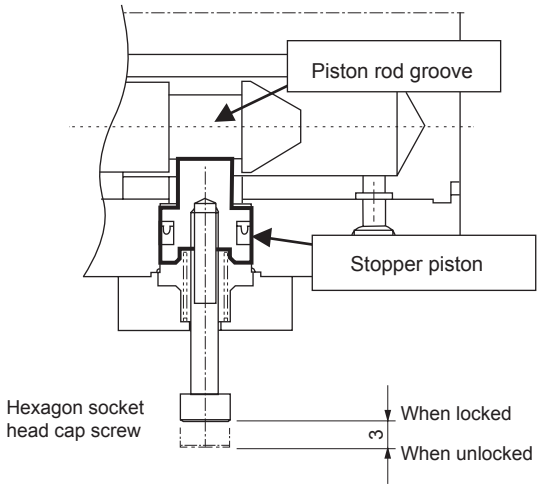

UCA2

Unit cylinder

ø10/ø16/ø25/ø32

Combined functions

Overview

The twin rod and double rod structure with integrated shock absorber has provided the cylinder with high position accuracy ideal for simple robots.

Features

Ideal for simple robots

Modular design enables easy in-house production of simple robots for assembling and conveying.

Two fixing methods

Two fixing methods are available: body fixing and end plate fixing.

High position accuracy

The twin double rod has excellent track position accuracy. Using the ball bearing further improves accuracy and service life.

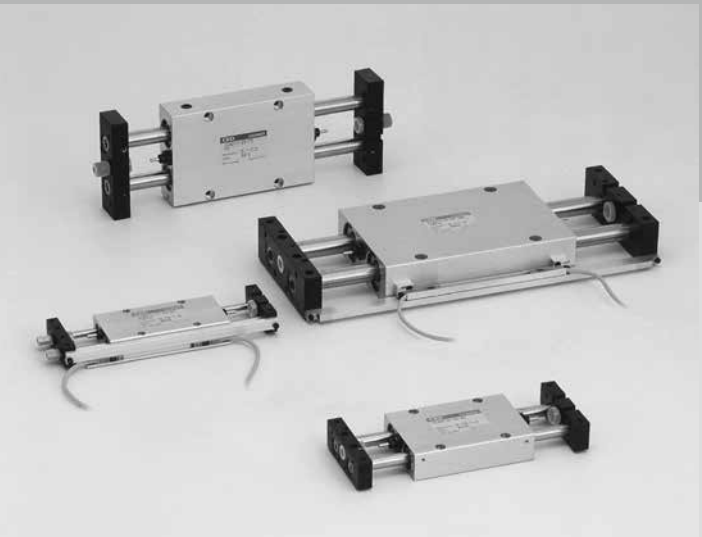

CONTENTS

Product introduction	636
Series variation	636
Variation and option combination selection table	638
● Double acting/single rod/metal bush bearing (UCA2)	640
● Double acting/single rod/ball bearing (UCA2-B)	650
Technical data	660
⚠Safety precautions	666

Series variation

Unit cylinder UCA2 Series

Variation	Model No. JIS symbol	Bore size (mm)	Standard stroke length (mm)						
			25	50	75	100	125	150	
Metal bush bearing with switch	UCA2 UCA2-L (with switch) 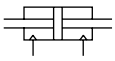	ø10	●	●	●	●			
		ø16/ø25/ø32	●	●	●	●	●	●	
Ball bearing with switch	UCA2-B UCA2-BL (with switch) 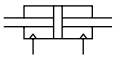	ø10	●	●	●	●			
		ø16/ø25/ø32	●	●	●	●	●	●	

Product introduction

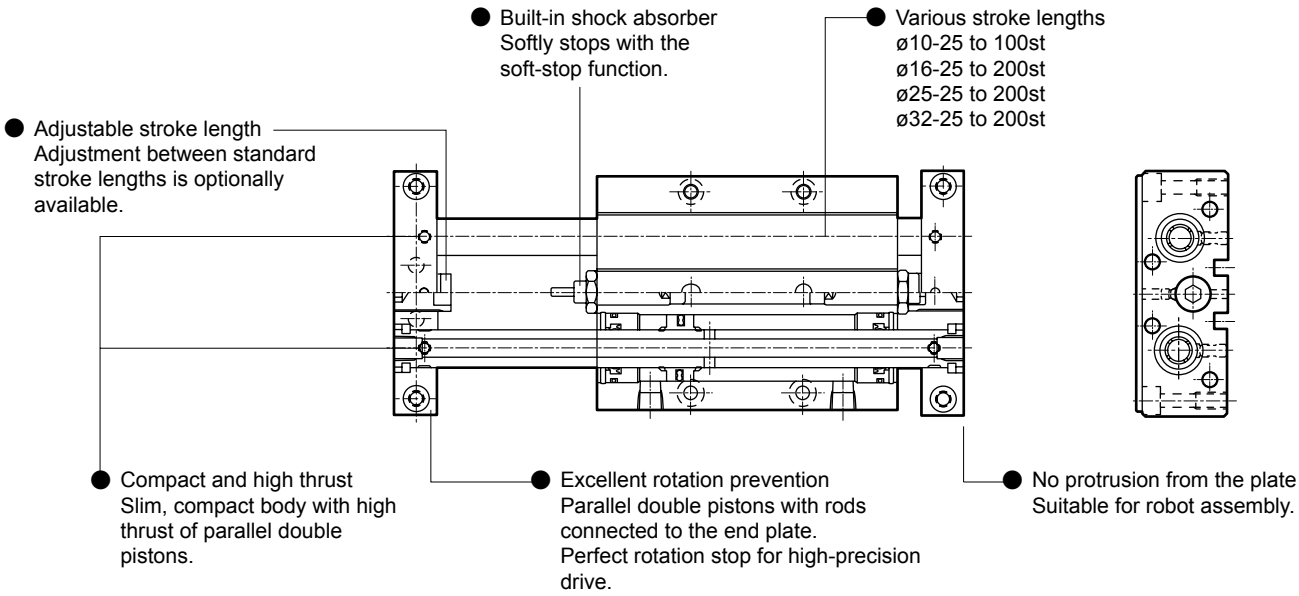

●: Standard, ◎: Option, ▒: Not available

Standard stroke length (mm)		Min. stroke length	Max. stroke length	Fixing method		Option				Switch	Page
				Body fixing	Plate fixing	Single adjusting stopper plate A side	Single adjusting stopper plate B side	Double adjusting stoppers	Copper and PTFE free		
175	200			X	Y	P1A	P1B	P2	P6		
		25	100	●	●	◎	◎	◎	●	◎	640
●	●		200	●	●	◎	◎	◎	●		
		25	100	●	●	◎	◎	◎	●	◎	650
●	●		200	●	●	◎	◎	◎	●		

LCM
LCR
LCG
LCW
LCX
STM
STG
STS/STL
STR2
UCA2
ULK*
JSK/M2
JSG
JSC3/JSC4
USSD
UFCD
USC
UB
JSB3
LMB
LML
HCM
HCA
LBC
CAC4
UCAC2
CAC-N
UCAC-N
RCS2
RCC2
PCC
SHC
MCP
GLC
MFC
BBS
RRC
GRC
RV3*
NHS
HRL
LN
Hand
Chuk
MecHnd/Chuk
ShkAbs
FJ
FK
SpdContr
Ending

Variation and option combination selection table

●: Standard
◎: Option
○: Available (made-to-order product)
△: Available depending on conditions (Contact CKD.)
×: Not available

Category		Category	Variation				Port thread			Option					
			Metal bush bearing	Ball bearing	With cylinder switch		NPT	G		Stroke adjusting stopper	Adjustable range of double stoppers 5 mm	Adjustable range of double stoppers 12.5 mm	Adjustable range of A side stopper 25 mm	Adjustable range of B side stopper 25 mm	
		Code	Blank	B	L		N	G			Blank	P2	P1A	P1B	
Variation	Metal bush bearing	Blank		×	◎		○	○			●	◎	◎	◎	
Variation	Ball bearing	B			◎		○	○			●	◎	◎	◎	
Variation	With cylinder switch	L					○	○			●	◎	◎	◎	
Port thread	NPT	N						×			○	○	○	○	
Port thread	G	G									○	○	○	○	
Option	Stroke adjusting stopper														
Option	Both sides Double stoppers Adjustable range 5 mm / side	Blank										×	×	×	
Option	Double stoppers Adjustable range 12.5 mm /side	P2											×	×	
Option	With A side Adjustable range 25 mm	P1A												×	
Option	With B side Adjustable range 25 mm	P1B													
Accessory	Cylinder switch	Listed separately	◎	◎	◎		○	○			◎	◎	◎	◎	

[Example of model No.]

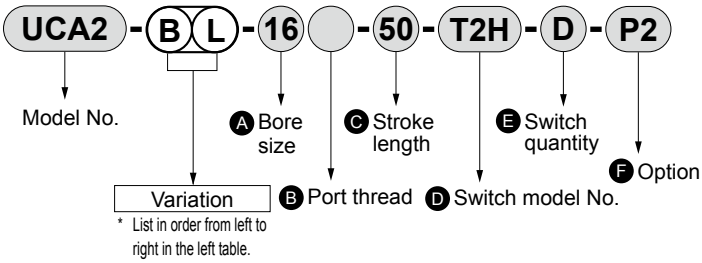

Model No.: Unit cylinder

● Variation: Ball bearing, with switch

A	Bore size	: ø16 mm
B	Port thread	: Rc thread
C	Stroke length	: 50 mm
D	Switch model No.	: Proximity T2H switch, lead wire 1 m
E	Switch quantity	: 2
F	Option	: Double adjusting stoppers, adjustable range 12.5 mm per side

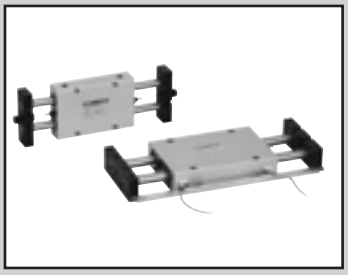

Unit cylinder Metal bush bearing/with switch

UCA2 Series

● Bore size: ø10/ø16/ø25/ø32

JIS symbol

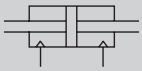

RoHS CAD

Specifications

Item	UCA2 UCA2-L (with switch)			
Bore size mm	ø10	ø16	ø25	ø32
Actuation	Double acting			
Working fluid	Compressed air			
Max. working pressure MPa	1.0 (≈150 psi, 10 bar)			
Min. working pressure MPa	0.15 (≈22 psi, 1.5 bar)		0.1 (≈15 psi, 1 bar)	
Proof pressure MPa	1.5 (≈220 psi, 15 bar)			
Ambient temperature °C	-10 (14°F) to 60 (140°F) (no freezing)			
Port size	M5		Rc1/8	
Stroke tolerance mm	+1.0 0			
Working piston speed mm/s	30 to 300			
Non-rotating accuracy Note	±0.1°	±0.05°		±0.02°
Max. operating frequency Cycle/min.	30			
Cushion	Shock absorber integrated			
Lubrication	Not required (use turbine oil class 1 ISO VG32 if necessary for lubrication)			
Allowable absorbed energy J	0.25	0.65	2.4	4.5

Note: Values of when the stroke is 0 mm (excluding deflection of the piston rod)

Stroke

Bore size (mm)	Standard stroke (mm)	Max. stroke (mm)	Min. stroke (mm)	Min. stroke with switch (mm)
ø10	25/50/75/100	100	25	10: With 1 switch (*2) 20: With 2 switches (*2) 75: With 3 switches
ø16	25/50/75/100 125/150/175/200	200		
ø25		200		
ø35		200		

*1: Products with stroke other than standard stroke are not available.
*2: Min. stroke when adjusted with the stopper.

Theoretical thrust table

(Unit: N)

Bore size (mm)	Operating direction	Working pressure MPa										
		0.1	0.15	0.2	0.3	0.4	0.5	0.6	0.7	0.8	0.9	1.0
ø10	Push	-	15.1	20.1	30.2	40.2	50.3	60.3	70.4	80.4	90.5	1.01×10^2
	Pull	-	15.1	20.1	30.2	40.2	50.3	60.3	70.4	80.4	90.5	1.01×10^2
ø16	Push	-	36.8	49.0	73.5	98.0	1.23×10^2	1.47×10^2	1.72×10^2	1.96×10^2	2.21×10^2	2.45×10^2
	Pull	-	36.8	49.0	73.5	98.0	1.23×10^2	1.47×10^2	1.72×10^2	1.96×10^2	2.21×10^2	2.45×10^2
ø25	Push	67.4	1.01×10^2	1.35×10^2	2.02×10^2	2.70×10^2	3.37×10^2	4.04×10^2	4.72×10^2	5.39×10^2	6.06×10^2	6.74×10^2
	Pull	67.4	1.01×10^2	1.35×10^2	2.02×10^2	2.70×10^2	3.37×10^2	4.04×10^2	4.72×10^2	5.39×10^2	6.06×10^2	6.74×10^2
ø32	Push	1.21×10^2	1.81×10^2	2.41×10^2	3.62×10^2	4.83×10^2	6.03×10^2	7.24×10^2	8.44×10^2	9.65×10^2	1.09×10^3	1.21×10^3
	Pull	1.21×10^2	1.81×10^2	2.41×10^2	3.62×10^2	4.83×10^2	6.03×10^2	7.24×10^2	8.44×10^2	9.65×10^2	1.09×10^3	1.21×10^3

LCM
LCR
LCG
LCW
LCX
STM
STG
STS/STL
STR2
UCA2
ULK*
JSK/M2
JSG
JSC3/JSC4
USSD
UFCD
USC
UB
JSB3
LMB
LML
HCM
HCA
LBC
CAC4
UCAC2
CAC-N
UCAC-N
RCS2
RCC2
PCC
SHC
MCP
GLC
MFC
BBS
RRC
GRC
RV3*
NHS
HRL
LN
Hand
Chuk
MecHnd/Chuk
ShkAbs
FJ
FK
SpdContr
Ending

Switch specifications

●1-color/2-color LED

Item	Reed 2-wire				Proximity 2-wire		Proximity 3-wire		
	T0H/T0V		T5H/T5V		T2H/T2V	T2WH/ T2WV	T3H/ T3V	T3PH/ T3PV	T3WH/ T3WV
Applications	For programmable controller, relay		For programmable controller, relay, IC circuit (no indicator lamp), serial connection		Dedicated for programmable controller		For programmable controller, relay		
Output method	-		-		-		NPN output	PNP output	NPN output
Power supply voltage	-		-		-		10 to 28 VDC		
Load voltage	12/24 VDC	110 VAC	5/12/24 VDC	110 VAC	10 to 30 VDC	24 VDC ±10%	30 VDC or less		
Load current	5 to 50mA	7 to 20 mA	50 mA or less	20 mA or less	5 to 20 mA (*3)		100 mA or less		50 mA or less
Indicator lamp	LED (Lit when ON)		No indicator lamp		LED (Lit when ON)	Red/green LED (Lit when ON)	LED (Lit when ON)	Yellow LED (Lit when ON)	Red/green LED (Lit when ON)
Leakage current	0mA				1 mA or less		10 μA or less		
Weight g	1 m: 18 3 m: 49 5 m: 80				1 m: 18 3 m: 49 5 m: 80		1 m: 18 3 m: 49 5 m: 80		

*1 : Refer to Ending Page 1 for detailed switch specifications and dimensions.
*2 : Switches other than the above models, such as switches with connectors, are also available. Refer to Ending Page 1.
*3 : The max. load current is 20 mA at 25°C. The current is lower than 20 mA if the operating ambient temperature around the switch is higher than 25°C.

Cylinder weight (X: body fixing)

——Values in ( ) include the switch mounting rail.

[Unit: kg]

Model No.	Stroke (mm)								Switch weight per 1 pc
	25	50	75	100	125	150	175	200	
UCA2-X-10	0.30 (0.35)	0.37 (0.42)	0.43 (0.49)	0.49 (0.55)	-	-	-	-	Refer to the weight in the switch specifications.
UCA2-X-16	0.53 (0.56)	0.66 (0.71)	0.78 (0.84)	0.91 (0.98)	1.04 (1.12)	1.17 (1.25)	1.30 (1.39)	1.42 (1.52)	
UCA2-X-25	1.00 (1.04)	1.20 (1.26)	1.41 (1.47)	1.61 (1.68)	1.81 (1.89)	2.02 (2.11)	2.22 (2.32)	2.43 (2.53)	
UCA2-X-32	1.65 (1.69)	1.95 (2.01)	2.25 (2.31)	2.55 (2.62)	2.85 (2.93)	3.15 (3.24)	3.45 (3.55)	3.75 (3.85)	

Cylinder weight (Y: plate fixing)

——Values in ( ) include the switch mounting rail.

[Unit: kg]

Model No.	Stroke (mm)								Switch weight per 1 pc
	25	50	75	100	125	150	175	200	
UCA2-Y-10	0.30 (0.33)	0.37 (0.40)	0.43 (0.46)	0.49 (0.52)	-	-	-	-	Refer to the weight in the switch specifications.
UCA2-Y-16	0.53 (0.56)	0.66 (0.69)	0.78 (0.82)	0.91 (0.95)	1.04 (1.08)	1.17 (1.21)	1.30 (1.34)	1.42 (1.47)	
UCA2-Y-25	1.00 (1.03)	1.20 (1.23)	1.41 (1.44)	1.61 (1.65)	1.81 (1.85)	2.02 (2.06)	2.20 (2.27)	2.43 (2.47)	
UCA2-Y-32	1.65 (1.68)	1.95 (1.98)	2.25 (2.29)	2.55 (2.59)	2.85 (2.89)	3.15 (3.19)	3.45 (3.50)	3.75 (3.80)	

LCM
LCR
LCG
LCW
LCX
STM
STG
STS/STL
STR2
UCA2
ULK*
JSK/M2
JSG
JSC3/JSC4
USSD
UFCD
USC
UB
JSB3
LMB
LML
HCM
HCA
LBC
CAC4
UCAC2
CAC-N
UCAC-N
RCS2
RCC2
PCC
SHC
MCP
GLC
MFC
BBS
RRC
GRC
RV3*
NHS
HRL
LN
Hand
Chuk
MecHnd/Chuk
ShkAbs
FJ
FK
SpdContr
Ending

How to order

Without switch (without magnet for switch)

UCA2 - X - 10 ( ) - 25 ———— P1A

With switch (built-in magnet for switch)

UCA2-L - X - 10 ( ) - 25 - T2H - RA - P1A

Ⓐ Fixing method

Ⓑ Bore size

Ⓒ Port thread

Ⓓ Stroke
Refer to page 640 for the min. stroke.

Ⓔ Switch model No. *1

Ⓕ Switch quantity *2

Ⓖ Option *3

Code	Description
Ⓐ Fixing method	
X	Body fixing
Y	Plate fixing

Ⓑ Bore size (mm)	
10	ø10
16	ø16
25	ø25
32	ø32

Ⓒ Port thread	
Blank	Rc thread
NN	NPT thread (ø25 and over) (Made-to-order product)
GN	G thread (ø25 and over) (made-to-order product)

Ⓓ Stroke (mm)

Bore size (ø)		10	16	25	32
25	25	●	●	●	●
50	50	●	●	●	●
75	75	●	●	●	●
100	100	●	●	●	●
125	125		●	●	●
150	150		●	●	●
175	175		●	●	●
200	200		●	●	●

Ⓔ Switch model No.

Straight Lead wire	L-shaped Lead wire	Contact	Voltage AC	Voltage DC	Indicator	Lead wire
T0H*	**T0V***	Reed	●	●	1-color LED	2-wire
T5H*	**T5V***	Reed	●	●	No indicator lamp	2-wire
T2H*	**T2V***	Prox.		●	1-color LED	2-wire
T3H*	**T3V***	Prox.		●	1-color LED	3-wire
T3PH*	**T3PV***	Prox.		●	1-color LED (PNP output)	3-wire
T2WH*	**T2WV***	Prox.		●	2-color LED	2-wire
T3WH*	**T3WV***	Prox.		●	2-color LED	3-wire

*** Lead wire length**	
Blank	1m (Standard)
3	3m (Option)
5	5m (Option)

Ⓕ Switch quantity		
RA	1	Plate A side
RB	1	Plate B side
D	2	
T	3	

Ⓖ Option		
P1A	Single adjusting stopper	Plate A side
P1B	Single adjusting stopper	Plate B side
P2	Double adjusting stoppers	

⚠ Precautions for model No. selection

*1 : Magnet is not built into the type without switch. For specifications with switch but without switch installed, a magnet and magnet rail are mounted but a switch rail is not.
*2 : Min. stroke with three switches: 75 (mm)
*3 : Difference between side A and side B is described in the dimensions.

[Example of model No.]
UCA2-L-X-10-25-T2H-RA-P1A

Model: Unit cylinder metal bush bearing

Ⓐ Fixing method : Body fixing
Ⓑ Bore size : ø10 mm
Ⓒ Port thread : Rc thread
Ⓓ Stroke : 25mm
Ⓔ Switch model No. : Proximity switch T2H, lead wire length 1 m
Ⓕ Switch quantity : 1 (plate A side)
Ⓖ Option : Single adjusting stopper (plate A side)

LCM
LCR
LCG
LCW
LCX
STM
STG
STS/STL
STR2
UCA2
ULK*
JSK/M2
JSG
JSC3/JSC4
USSD
UFCD
USC
UB
JSB3
LMB
LML
HCM
HCA
LBC
CAC4
UCAC2
CAC-N
UCAC-N
RCS2
RCC2
PCC
SHC
MCP
GLC
MFC
BBS
RRC
GRC
RV3*
NHS
HRL
LN
Hand
Chuk
MecHnd/Chuk
ShkAbs
FJ
FK
SpdContr
Ending

How to order switch

●Switch body + mounting bracket set (including switch rail)... ①

UCA2 - T0H - X - 10 - 25 - RA

- T0H: Switch model No. (Item Ⓔ on page 642)
- X: Fixing method (Item Ⓐ on page 642)
- 10: Bore size (Item Ⓑ on page 642)
- 25: Stroke (Item Ⓓ on page 642)
- RA: Switch quantity (Item Ⓕ on page 642)

● Mounting bracket set (including switch rail) + magnet...②

UCA2 - T - X - 10 - 25

- X: Fixing method (Item Ⓐ on page 642)
- 10: Bore size (Item Ⓑ on page 642)
- 25: Stroke (Item Ⓓ on page 642)

●Mounting bracket set (including switch rail)... ③

UCA2 - T - X - 10 - 25 - SW - RAIL

- X: Fixing method (Item Ⓐ on page 642)
- 10: Bore size (Item Ⓑ on page 642)
- 25: Stroke (Item Ⓓ on page 642)

● Switch body only...④

SW - T0H

- T0H: Switch model No. (Item Ⓔ on page 642)

1) When changing from the type without switch to the type with T-switch

Changed content	Switch required	Switch not required
UCA2-[X.Y] → UCA2-L-[X.Y]	② + ④	②

* A switch can be installed separately even if “switch not required” is selected. (when you already have a T-switch, etc.)

2) When only the magnet for T-switch is installed

Changed content	Switch required	Switch not required
UCA2-L-[X.Y] → UCA2-L-[X.Y] Without switch With switch	①	③

When it was not possible to install a switch in UCA2-L and up models. (Magnet only installed)

3) When changing from the type with S type switch to the type with T-switch

Changed content	Switch required	Switch not required
S type switch → T-switch	② + ④	-

* Set of switch rail, mounting bracket and switch body will be replaced.

How to order shock absorber set

● For ø10
UCA2-10-NCK

● For ø16 to ø32 (common)
UCA2-16-NCK

Specifications for rechargeable battery

(Catalog No. CC-1226A)

● Design compatible with rechargeable battery manufacturing process.

UCA2-……-P4*

Internal structure and parts list

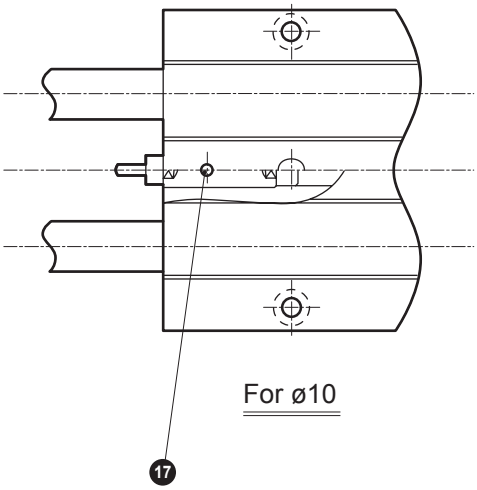

For ø10

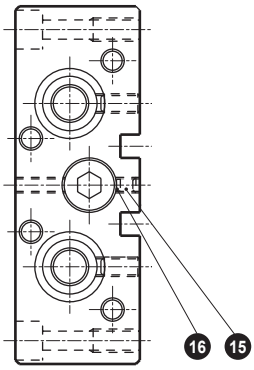

[For UCA2-X-25, 32]

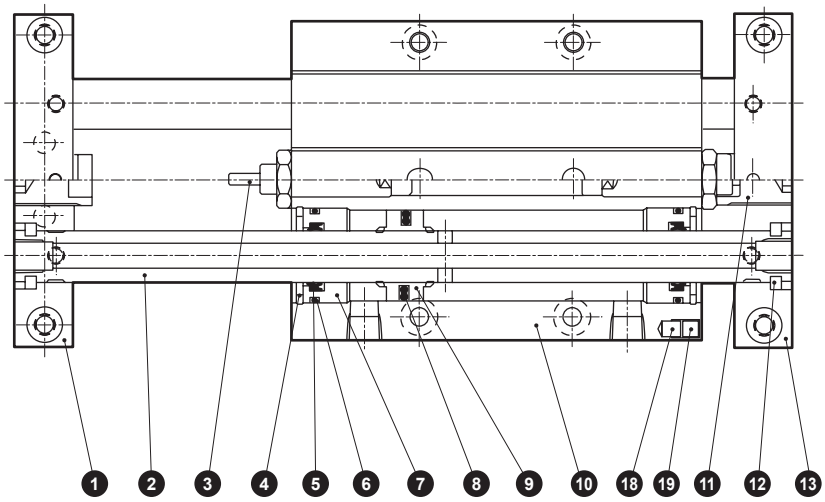

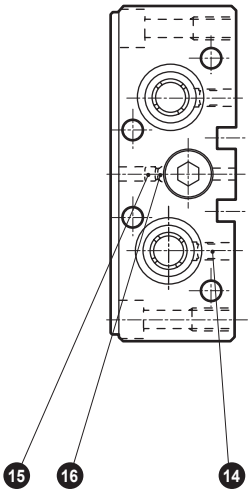

No.	Part name	Material	Remarks	No.	Part name	Material	Remarks
1	End plate (A)	Aluminum alloy	Alumite	10	Cylinder body	Aluminum alloy	Hard alumite
2	Piston rod	Steel	Industrial chrome plating	11	Stopper	Steel	Chromate
3	Shock absorber		ø10:UCA2-10-NCK ø16 to 32:UCA2-16-NCK	12	Split ring	Steel	Black finish
				13	End plate (B)	Aluminum alloy	Alumite
4	C-snap ring for hole	Steel	Zinc phosphate	14	Hexagon socket set screw	Alloy steel	Black finish
5	Rod packing	Nitrile rubber		15	Hexagon socket set screw	Alloy steel	
6	Rod metal gasket	Nitrile rubber		16	Set shoe	Aluminum alloy	
7	Rod metal	Aluminum alloy	Alumite	17	Hexagon socket set screw	Alloy steel	
8	Piston packing	Nitrile rubber		18	Magnet	Special alloy	UCA2-L-Y only
9	Piston	Aluminum alloy		19	Hexagon socket set screw	Stainless steel	UCA2-L-Y only

Repair parts list

Bore size (mm)	Kit No.	Repair parts No.
ø10	UCA2-10K	5 6 8 14
ø16	UCA2-16K	
ø25	UCA2-25K	
ø32	UCA2-32K	

Note: The repair parts are common between the metal bush bearing and ball bearing.

LCM
LCR
LCG
LCW
LCX
STM
STG
STS/STL
STR2
UCA2
ULK*
JSK/M2
JSG
JSC3/JSC4
USSD
UFCD
USC
UB
JSB3
LMB
LML
HCM
HCA
LBC
CAC4
UCAC2
CAC-N
UCAC-N
RCS2
RCC2
PCC
SHC
MCP
GLC
MFC
BBS
RRC
GRC
RV3*
NHS
HRL
LN
Hand
Chuk
MecHnd/Chuk
ShkAbs
FJ
FK
SpdContr
Ending

Dimensions: ø10

● Body fixing (X)

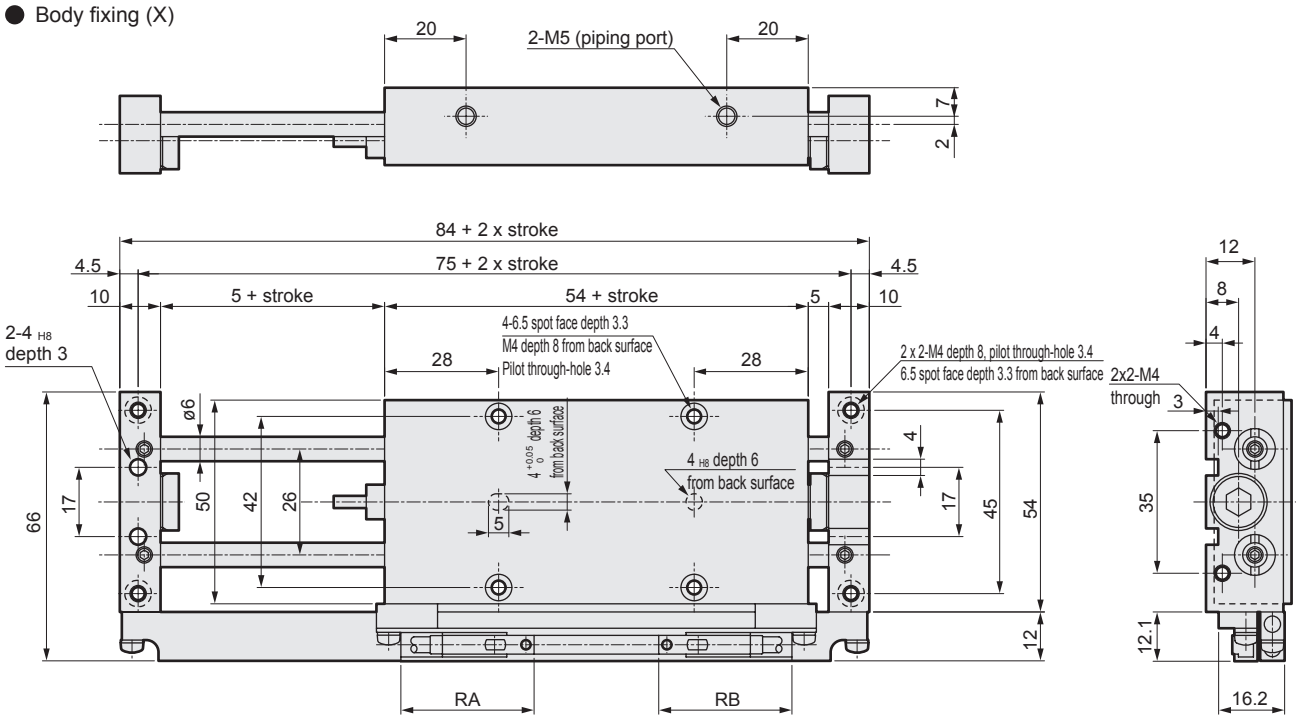

Plate A side

Plate B side

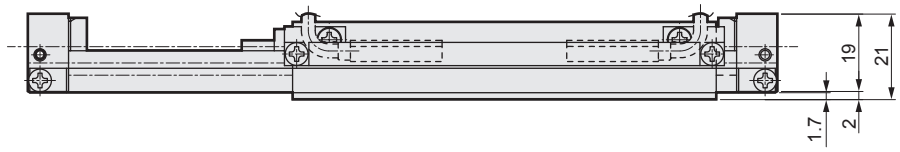

Code	T0, T5	T2, T3	T2W, T3W
RA	32.7	32	30.5
RB	32.7	32	30.5

● Plate fixing (Y)

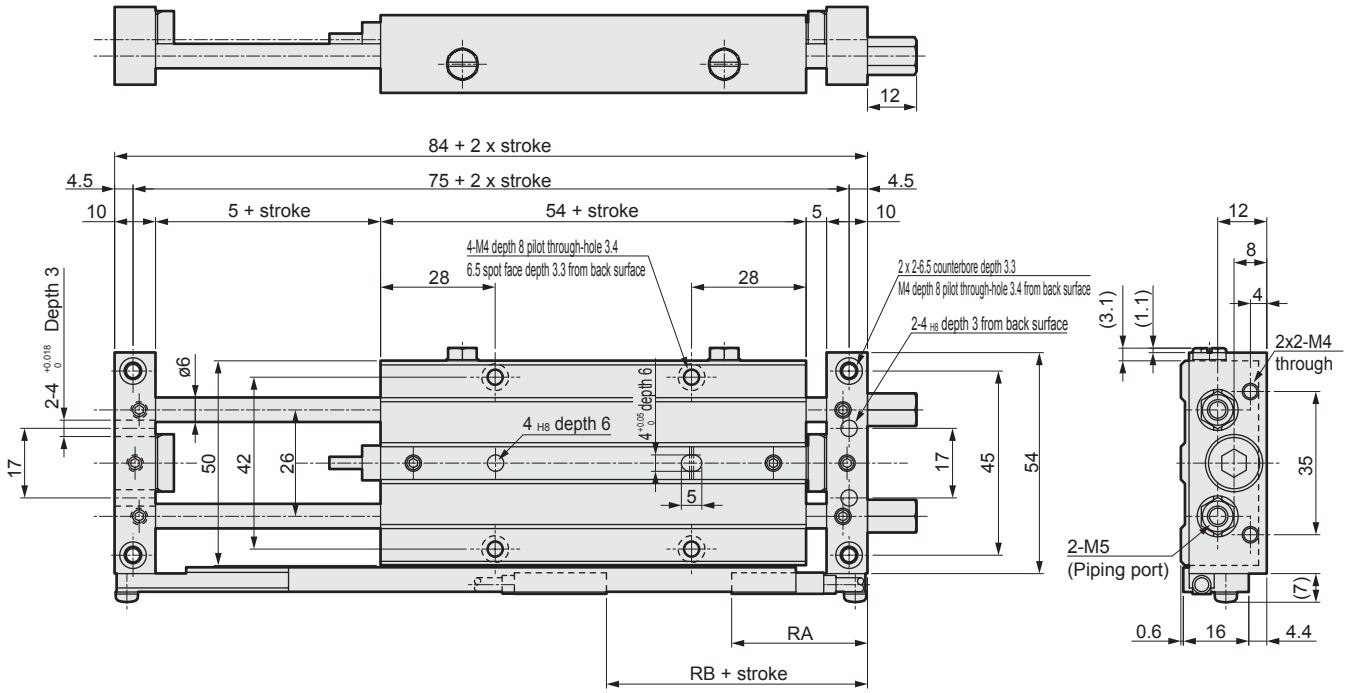

Plate B side

Plate A side

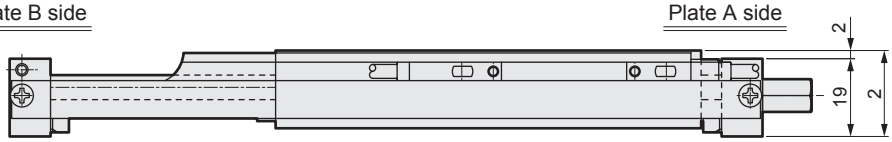

Code	T0, T5	T2, T3	T2W, T3W
RA	32.7	32	30.5
RB	13.3	14	15.5

* Adjusting to a longer stroke with the stopper may cause malfunction.
Refer to page 667 for details.

LCM
LCR
LCG
LCW
LCX
STM
STG
STS/STL
STR2
UCA2
ULK*
JSK/M2
JSG
JSC3/JSC4
USSD
UFCD
USC
UB
JSB3
LMB
LML
HCM
HCA
LBC
CAC4
UCAC2
CAC-N
UCAC-N
RCS2
RCC2
PCC
SHC
MCP
GLC
MFC
BBS
RRC
GRC
RV3*
NHS
HRL
LN
Hand
Chuk
MecHnd/Chuk
ShkAbs
FJ
FK
SpdContr
Ending

Dimensions: ø16

CAD

● Body fixing (X)

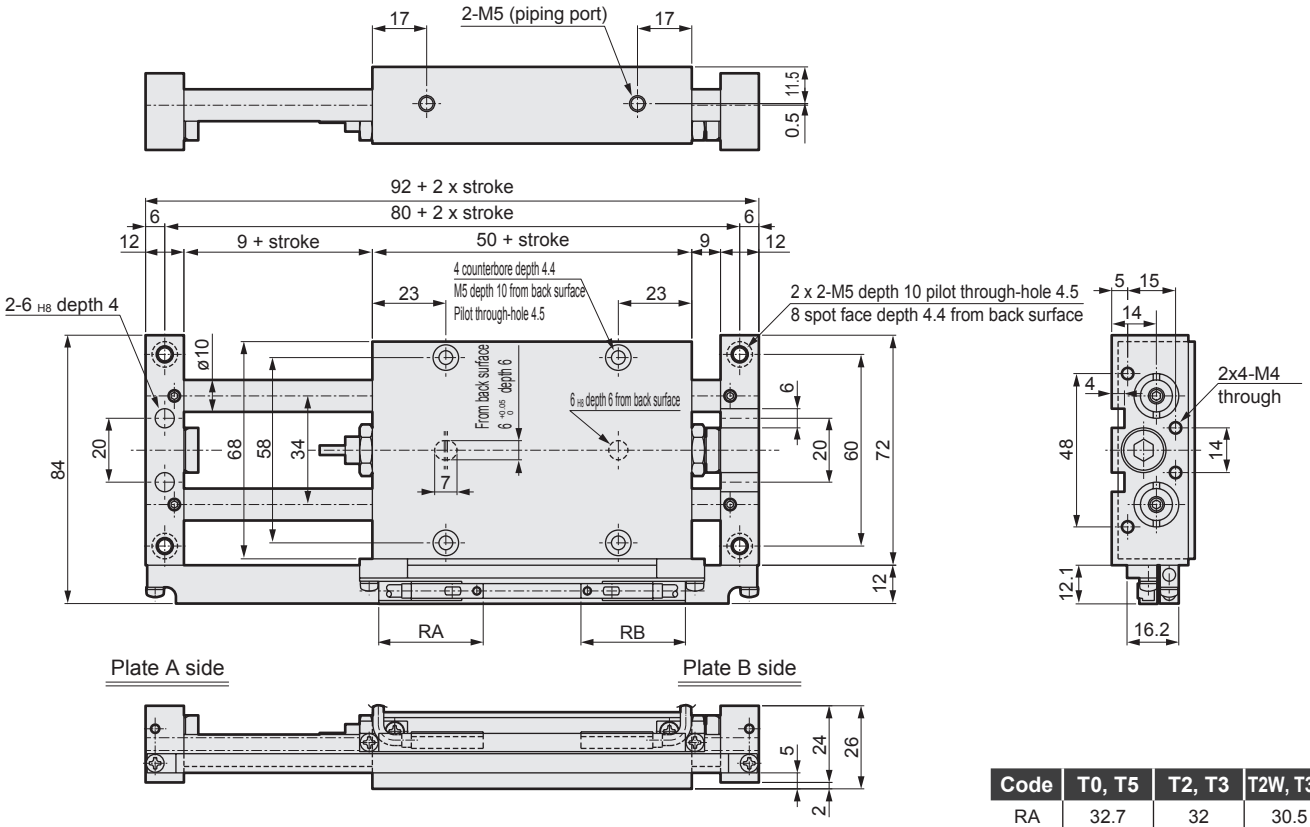

Code	T0, T5	T2, T3	T2W, T3W
RA	32.7	32	30.5
RB	32.7	32	30.5

● Plate fixing (Y)

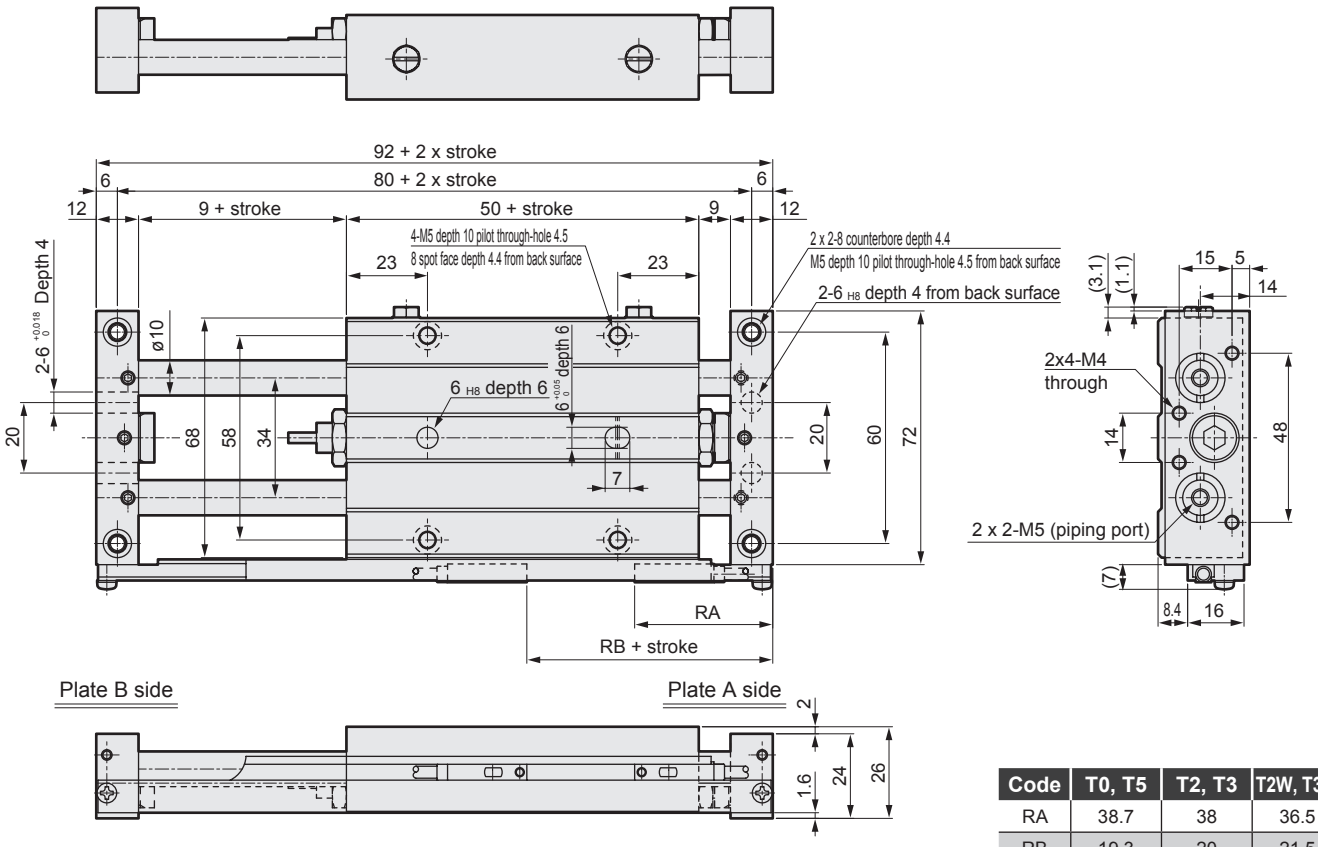

Code	T0, T5	T2, T3	T2W, T3W
RA	38.7	38	36.5
RB	19.3	20	21.5

* Adjusting to a longer stroke with the stopper may cause malfunction.
Refer to page 667 for details.

LCM
LCR
LCG
LCW
LCX
STM
STG
STS/STL
STR2
UCA2
ULK*
JSK/M2
JSG
JSC3/JSC4
USSD
UFCD
USC
UB
JSB3
LMB
LML
HCM
HCA
LBC
CAC4
UCAC2
CAC-N
UCAC-N
RCS2
RCC2
PCC
SHC
MCP
GLC
MFC
BBS
RRC
GRC
RV3*
NHS
HRL
LN
Hand
Chuk
MecHnd/Chuk
ShkAbs
FJ
FK
SpdContr
Ending

Dimensions: ø25 CAD

● Body fixing (X)

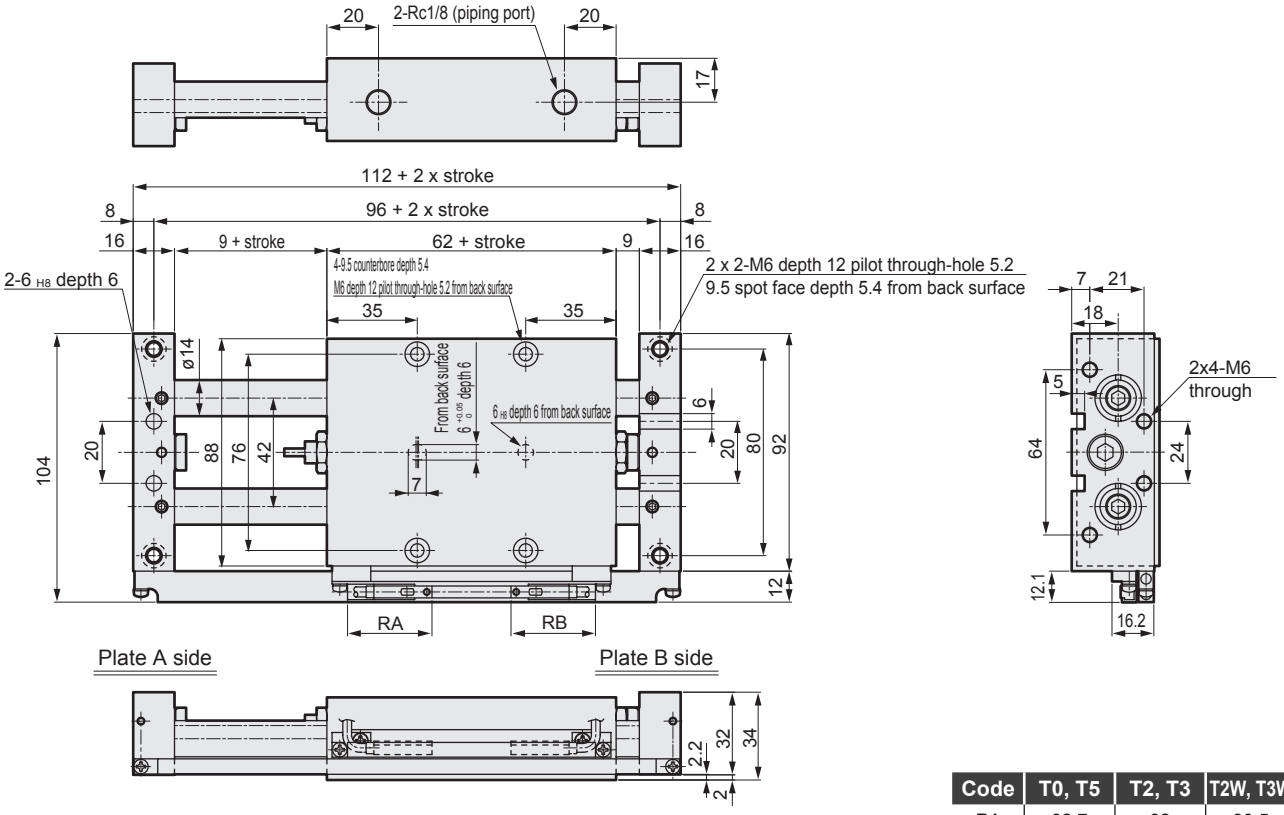

Code	T0, T5	T2, T3	T2W, T3W
RA	32.7	32	30.5
RB	32.7	32	30.5

● Plate fixing (Y)

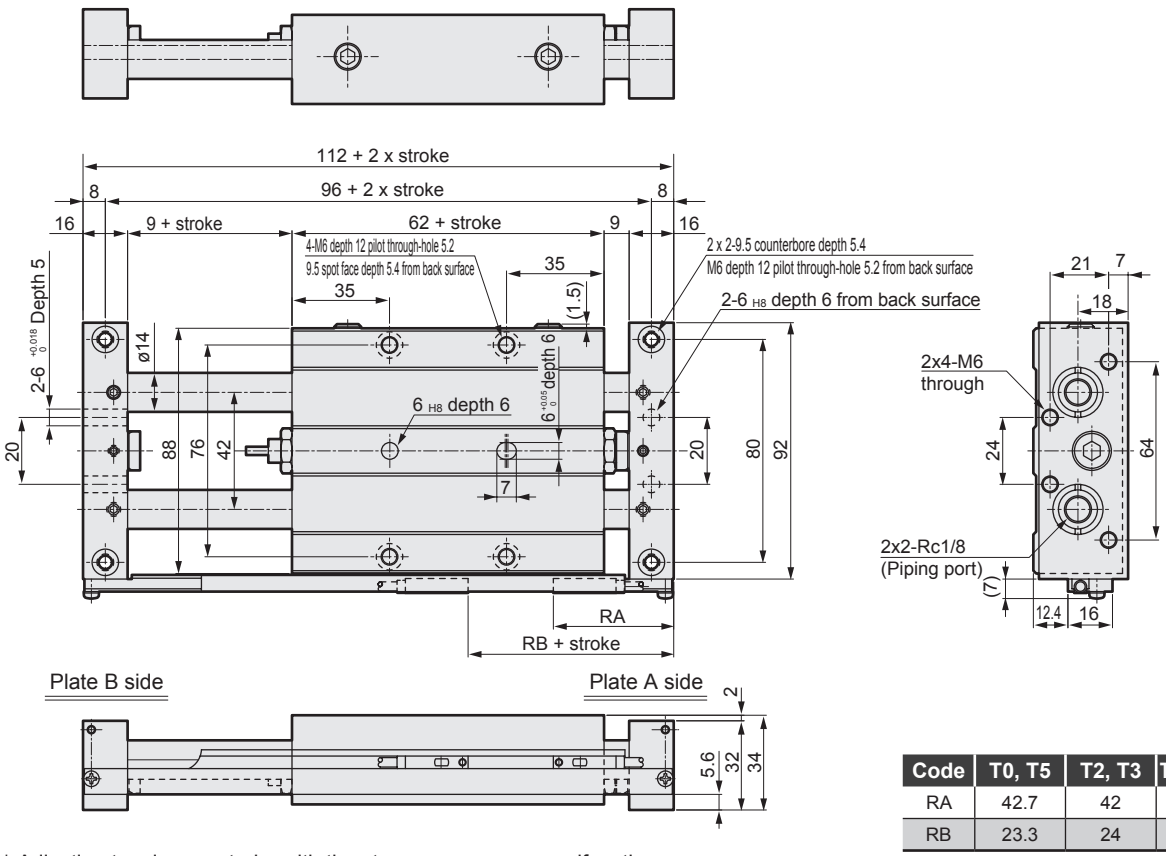

Code	T0, T5	T2, T3	T2W, T3W
RA	42.7	42	40.5
RB	23.3	24	25.5

* Adjusting to a longer stroke with the stopper may cause malfunction.
Refer to page 667 for details.

LCM
LCR
LCG
LCW
LCX
STM
STG
STS/STL
STR2
UCA2
ULK*
JSK/M2
JSG
JSC3/JSC4
USSD
UFCD
USC
UB
JSB3
LMB
LML
HCM
HCA
LBC
CAC4
UCAC2
CAC-N
UCAC-N
RCS2
RCC2
PCC
SHC
MCP
GLC
MFC
BBS
RRC
GRC
RV3*
NHS
HRL
LN
Hand
Chuk
MecHnd/Chuk
ShkAbs
FJ
FK
SpdContr
Ending

Dimensions: ø32

● Body fixing (X)

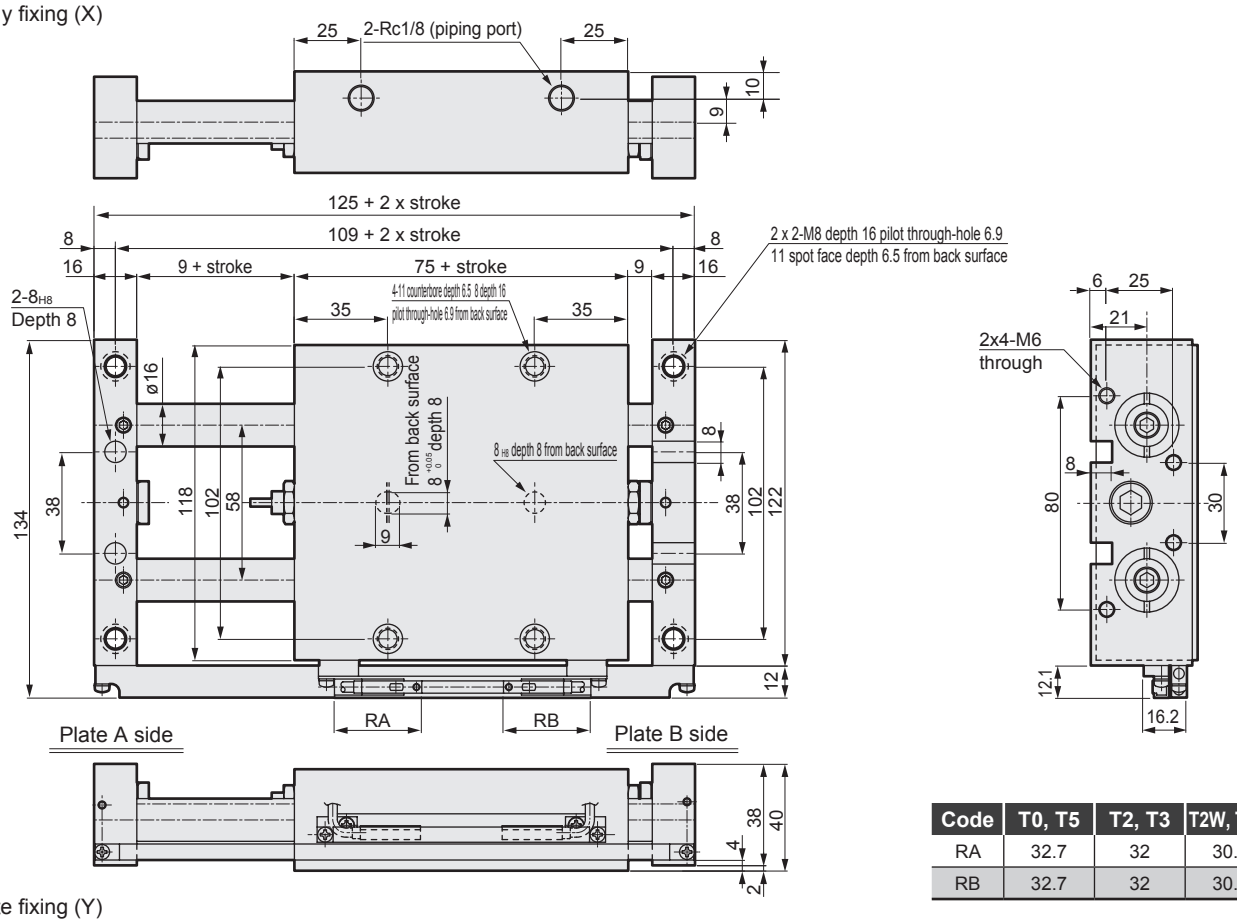

Code	T0, T5	T2, T3	T2W, T3W
RA	32.7	32	30.5
RB	32.7	32	30.5

● Plate fixing (Y)

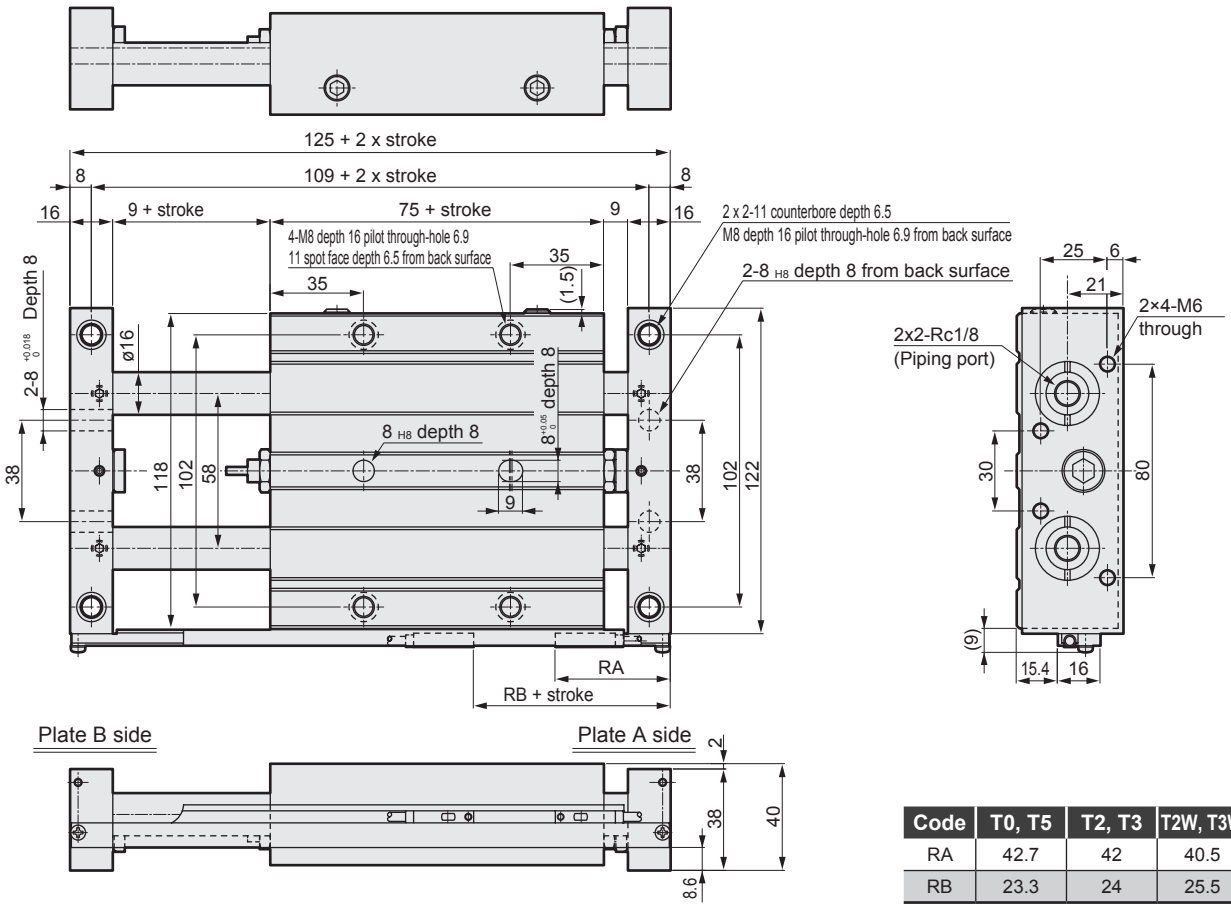

Code	T0, T5	T2, T3	T2W, T3W
RA	42.7	42	40.5
RB	23.3	24	25.5

* Adjusting to a longer stroke with the stopper may cause malfunction.
Refer to page 667 for details.

LCM
LCR
LCG
LCW
LCX
STM
STG
STS/STL
STR2
UCA2
ULK*
JSK/M2
JSG
JSC3/JSC4
USSD
UFCD
USC
UB
JSB3
LMB
LML
HCM
HCA
LBC
CAC4
UCAC2
CAC-N
UCAC-N
RCS2
RCC2
PCC
SHC
MCP
GLC
MFC
BBS
RRC
GRC
RV3*
NHS
HRL
LN
Hand
Chuk
MecHnd/Chuk
ShkAbs
FJ
FK
SpdContr
Ending

Dimensions: Adjusting stopper

● UCA2-X/Y-10/16/25/32-* *-P1* (single adjusting stopper)

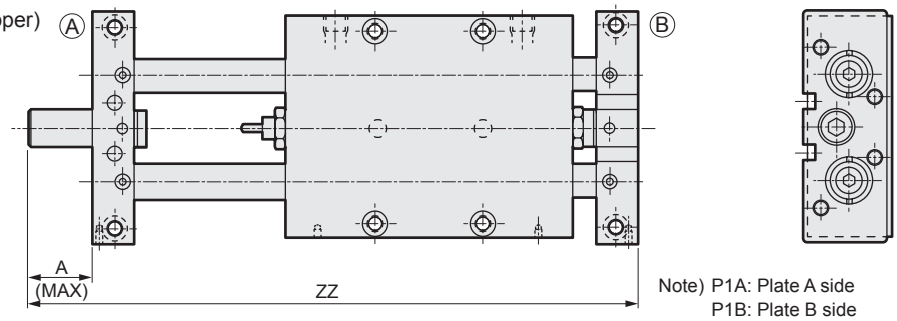

Note) P1A: Plate A side
P1B: Plate B side

Model No.	A (MAX)	ZZ							
		25st	50st	75st	100st	125st	150st	175st	200st
UCA2-10	25	159	209	259	309	-	-	-	-
UCA2-16		167	217	267	317	367	417	467	517
UCA2-25		187	237	287	337	387	437	487	537
UCA2-32		200	250	300	350	400	450	500	550

● UCA2-X/Y-10/16/25/32-* *-P2* (double adjusting stoppers)

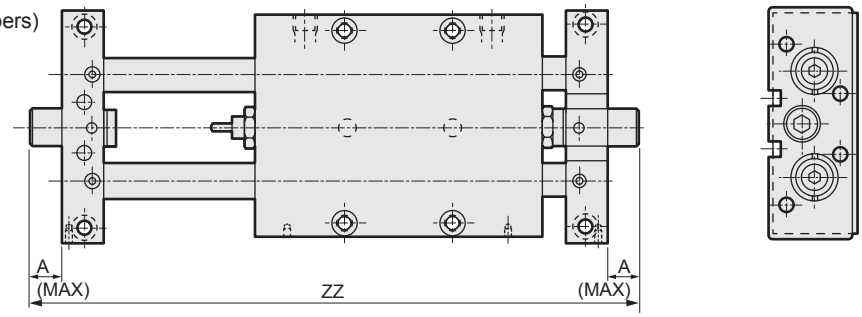

Model No.	A (MAX)	ZZ							
		25st	50st	75st	100st	125st	150st	175st	200st
UCA2-10	12.5	159	209	259	309	-	-	-	-
UCA2-16		167	217	267	317	367	417	467	517
UCA2-25		187	237	287	337	387	437	487	537
UCA2-32		200	250	300	350	400	450	500	550

Stopper dimensions

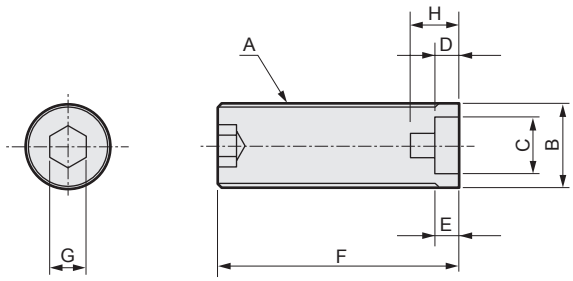

Code / Bore size (mm)	A	B	C	D	E	F		G	H
ø10	M14x1	ø14	ø10	4	4	Standard	14.5	6	8
						P2	27		
						P1	39.5		
ø16	M14x1	ø14	ø10	8	4	Standard	17	6	-
						P2	29.5		
						P1	42		
ø25	M14x1	ø14	ø10	6.5	4	Standard	21	6	-
						P2	33.5		
						P1	46		
ø32	M16x1	ø16	ø10	5.5	4	Standard	21	8	-
						P2	33.5		
						P1	46		

Model No. of discrete adjusting stoppers

● Standard

Part/part name / Bore size (mm)	Standard stopper		Single stopper		Double stoppers	
	Model No.	Weight g	Model No.	Weight g	Model No.	Weight g
ø10	UCA2-P-10	12	UCA2-P1-10	38	UCA2-P2-10	25
ø16	UCA2-P-16	12	UCA2-P1-16	38	UCA2-P2-16	25
ø25	UCA2-P-25	17	UCA2-P1-25	44	UCA2-P2-25	30
ø32	UCA2-P-32	22	UCA2-P1-32	58	UCA2-P2-32	40

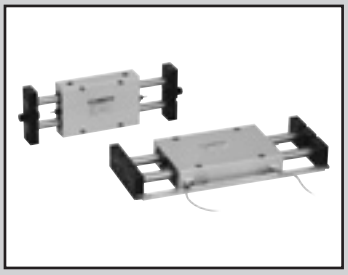

Unit cylinder Ball bearing/with switch

UCA2-B Series

● Bore size: ø10/ø16/ø25/ø32

JIS symbol

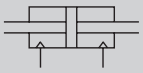

RoHS CAD

Specifications

Item	UCA2-B UCA2-BL (with switch)			
Bore size mm	ø10	ø16	ø25	ø32
Actuation	Double acting			
Working fluid	Compressed air			
Max. working pressure MPa	1.0 (≈150 psi, 10 bar)			
Min. working pressure MPa	0.15 (≈22 psi, 1.5 bar)		0.1 (≈15 psi, 1 bar)	
Proof pressure MPa	1.5 (≈220 psi, 15 bar)			
Ambient temperature °C	-10 (14°F) to 60 (140°F) (no freezing)			
Port size	M5		Rc1/8	
Stroke tolerance mm	+1.0 0			
Working piston speed mm/s	30 to 300			
Non-rotating accuracy *1	±0.04°	±0.03°	±0.015°	±0.015°
Max. operating frequency Cycle/min.	30			
Cushion	Shock absorber integrated			
Lubrication	Not required (use turbine oil class 1 ISO VG32 if necessary for lubrication)			
Allowable absorbed energy J	0.25	0.65	2.4	4.5

*1: Values of when the stroke is 0 mm (excluding deflection of the piston rod)

Stroke

Bore size (mm)	Standard stroke (mm)	Max. stroke (mm)	Min. stroke (mm)	Min. stroke with switch (mm)
ø10	25/50/75/100	100	25	10: With 1 switch 20: With 2 switches 75: With 3 switches
ø16	25/50/75/100 125/150/175/200	200		
ø25				
ø35				

Note: Products with stroke other than standard stroke are not available.

Theoretical thrust table

(Unit: N)

Bore size (mm)	Operating direction	Working pressure MPa										
		0.1	0.15	0.2	0.3	0.4	0.5	0.6	0.7	0.8	0.9	1.0
ø10	Push	-	15.1	20.1	30.2	40.2	50.3	60.3	70.4	80.4	90.5	1.01×10^2
	Pull	-	15.1	20.1	30.2	40.2	50.3	60.3	70.4	80.4	90.5	1.01×10^2
ø16	Push	-	36.8	49.0	73.5	98.0	1.23×10^2	1.47×10^2	1.72×10^2	1.96×10^2	2.21×10^2	2.45×10^2
	Pull	-	36.8	49.0	73.5	98.0	1.23×10^2	1.47×10^2	1.72×10^2	1.96×10^2	2.21×10^2	2.45×10^2
ø25	Push	67.4	1.01×10^2	1.35×10^2	2.02×10^2	2.70×10^2	3.37×10^2	4.04×10^2	4.72×10^2	5.39×10^2	6.06×10^2	6.74×10^2
	Pull	67.4	1.01×10^2	1.35×10^2	2.02×10^2	2.70×10^2	3.37×10^2	4.04×10^2	4.72×10^2	5.39×10^2	6.06×10^2	6.74×10^2
ø32	Push	1.21×10^2	1.81×10^2	2.41×10^2	3.62×10^2	4.83×10^2	6.03×10^2	7.24×10^2	8.44×10^2	9.65×10^2	1.09×10^3	1.21×10^3
	Pull	1.21×10^2	1.81×10^2	2.41×10^2	3.62×10^2	4.83×10^2	6.03×10^2	7.24×10^2	8.44×10^2	9.65×10^2	1.09×10^3	1.21×10^3

Switch specifications

● 1-color/2-color LED

Item	Reed 2-wire				Proximity 2-wire		Proximity 3-wire		
	T0H/T0V		T5H/T5V		T2H/T2V	T2WH/ T2WV	T3H/ T3V	T3PH/ T3PV	T3WH/ T3WV
Applications	For programmable controller, relay		For programmable controller, relay, IC circuit (no indicator lamp), serial connection		Dedicated for programmable controller		For programmable controller, relay		
Output method	-		-		-		NPN output	PNP output	NPN output
Power supply voltage	-		-		-		10 to 28 VDC		
Load voltage	12/24 VDC	110 VAC	5/12/24 VDC	110 VAC	10 to 30 VDC	24 VDC ±10%	30 VDC or less		
Load current	5 to 50mA	7 to 20 mA	50 mA or less	20 mA or less	5 to 20 mA (*3)		100 mA or less		50 mA or less
Indicator lamp	LED (Lit when ON)		No indicator lamp		LED (Lit when ON)	Red/green LED (Lit when ON)	LED (Lit when ON)	Yellow LED (Lit when ON)	Red/green LED (Lit when ON)
Leakage current	0mA				1 mA or less		10 μA or less		
Weight g	1 m: 18 3 m: 49 5 m: 80				1 m: 18 3 m: 49 5 m: 80		1 m: 18 3 m: 49 5 m: 80		

*1 : Refer to Ending Page 1 for detailed switch specifications and dimensions.
*2 : Switches other than the above models, such as switches with connectors, are also available. Refer to Ending Page 1.
*3 : The max. load current is 20 mA at 25°C. The current is lower than 20 mA if the operating ambient temperature around the switch is higher than 25°C. (5 to 10 mA at 60°C)

Cylinder weight (X: body fixing) —

Values in ( ) include the switch mounting rail.

[Unit: kg]

Model No.	Stroke (mm)								Switch weight per 1 pc.
	25	50	75	100	125	150	175	200	
UCA2-B-X-10	0.36 (0.41)	0.42 (0.47)	0.48 (0.54)	0.54 (0.61)	-	-	-	-	Refer to the weight in the switch specifications.
UCA2-B-X-16	0.80 (0.85)	0.92 (0.98)	1.05 (1.11)	1.18 (1.25)	1.31 (1.38)	1.44 (1.51)	1.56 (1.65)	1.69 (1.78)	
UCA2-B-X-25	1.32 (1.37)	1.53 (1.58)	1.73 (1.79)	1.94 (2.01)	2.14 (2.22)	2.35 (2.43)	2.55 (2.75)	2.76 (2.85)	
UCA2-B-X-32	2.21 (2.26)	2.51 (2.57)	2.81 (2.87)	3.11 (3.18)	3.41 (3.49)	3.71 (3.79)	4.01 (4.10)	4.31 (4.40)	

Cylinder weight (Y: plate fixing) —

Values in ( ) include the switch mounting rail.

[Unit: kg]

Model No.	Stroke (mm)								Switch weight per 1 pc.
	25	50	75	100	125	150	175	200	
UCA2-B-Y-10	0.36 (0.39)	0.42 (0.46)	0.48 (0.54)	0.54 (0.60)	-	-	-	-	Refer to the weight in the switch specifications.
UCA2-B-Y-16	0.80 (0.83)	0.92 (0.96)	1.05 (1.09)	1.18 (1.22)	1.31 (1.35)	1.44 (1.48)	1.56 (1.61)	1.69 (1.74)	
UCA2-B-Y-25	1.32 (1.36)	1.53 (1.56)	1.73 (1.77)	1.94 (1.98)	2.14 (2.18)	2.35 (2.39)	2.55 (2.60)	2.76 (2.80)	
UCA2-B-Y-32	2.21 (2.24)	2.51 (2.54)	2.81 (2.85)	3.11 (3.15)	3.41 (3.45)	3.71 (3.75)	4.01 (4.06)	4.31 (4.36)	

LCM
LCR
LCG
LCW
LCX
STM
STG
STS/STL
STR2
UCA2
ULK*
JSK/M2
JSG
JSC3/JSC4
USSD
UFCD
USC
UB
JSB3
LMB
LML
HCM
HCA
LBC
CAC4
UCAC2
CAC-N
UCAC-N
RCS2
RCC2
PCC
SHC
MCP
GLC
MFC
BBS
RRC
GRC
RV3*
NHS
HRL
LN
Hand
Chuk
MecHnd/Chuk
ShkAbs
FJ
FK
SpdContr
Ending

How to order

Without switch (without magnet for switch)

UCA2-B — X - 10 ( ) - 25 ———— P1A

With switch (built-in magnet for switch)

UCA2-BL - X - 10 ( ) - 25 - T2H - RA - P1A

Ⓐ Fixing method

Ⓑ Bore size

Ⓒ Port thread

Ⓓ Stroke
Refer to page 650 for the min. stroke.

Ⓔ Switch model No. *1

Ⓕ Switch quantity *2

Ⓖ Option *3

Code	Description
Ⓐ Fixing method	
X	Body fixing
Y	Plate fixing

Ⓑ Bore size (mm)	
10	ø10
16	ø16
25	ø25
32	ø32

Ⓒ Port thread	
Blank	Rc thread
NN	NPT thread (ø25 and over) (made-to-order product)
GN	G thread (ø25 and over) (made-to-order product)

Ⓓ Stroke (mm)

Bore size (ø)		10	16	25	32
25	25	●	●	●	●
50	50	●	●	●	●
75	75	●	●	●	●
100	100	●	●	●	●
125	125		●	●	●
150	150		●	●	●
175	175		●	●	●
200	200		●	●	●

Ⓔ Switch model No.

Straight lead wire	L-shaped lead wire	Contact	Voltage AC	Voltage DC	Indicator	Lead wire
T0H*	**T0V***	Reed	●	●	1-color LED	2-wire
T5H*	**T5V***	Reed	●	●	no indicator lamp	2-wire
T2H*	**T2V***	Prox.		●	1-color LED	2-wire
T3H*	**T3V***	Prox.		●	1-color LED	3-wire
T3PH*	**T3PV***	Prox.		●	1-color LED (PNP output)	3-wire
T2WH*	**T2WV***	Prox.		●	2-color LED	2-wire
T3WH*	**T3WV***	Prox.		●	2-color LED	3-wire

*** Lead wire length**	
Blank	1 m (standard)
3	3 m (option)
5	5 m (option)

Ⓕ Switch quantity

RA	1	Plate A side
RB	1	Plate B side
D	2	
T	3	

Ⓖ Option

P1A	Single adjusting stopper	Plate A side
P1B	Single adjusting stopper	Plate B side
P2	Double adjusting stoppers	

⚠ Precautions for model No. selection

*1 : Magnet is not built into the type without switch. For specifications with switch but without switch installed, a magnet and magnet rail are mounted but a switch rail is not.
*2 : Min. stroke with three switches: 75 (mm)
*3 : Difference between side A and side B is described in the dimensions.

[Example of model No.]

UCA2-BL-X-25-25-T2H-RA-P1A

Model: Unit cylinder ball bearing
Ⓐ Fixing method : Body fixing
Ⓑ Bore size : ø25 mm
Ⓒ Port thread : Rc thread
Ⓓ Stroke : 25 mm
Ⓔ Switch model No.: Proximity switch T2H, lead wire length 1 m
Ⓕ Switch quantity : 1 (plate A side)
Ⓖ Option : Single adjusting stopper (plate A side)

LCM
LCR
LCG
LCW
LCX
STM
STG
STS/STL
STR2
UCA2
ULK*
JSK/M2
JSG
JSC3/JSC4
USSD
UFCD
USC
UB
JSB3
LMB
LML
HCM
HCA
LBC
CAC4
UCAC2
CAC-N
UCAC-N
RCS2
RCC2
PCC
SHC
MCP
GLC
MFC
BBS
RRC
GRC
RV3*
NHS
HRL
LN
Hand
Chuk
MecHnd/Chuk
ShkAbs
FJ
FK
SpdContr
Ending

How to order switch

● Switch body + mounting bracket set (including switch rail)...①

UCA2-B - T0H - X - 10 - 25 - RA

- T0H: Switch model No. (Item Ⓔ on page 652)
- X: Fixing method (Item Ⓐ on page 652)
- 10: Bore size (Item Ⓑ on page 652)
- 25: Stroke (Item Ⓓ on page 652)
- RA: Switch quantity (Item Ⓕ on page 652)

● Mounting bracket set (including switch rail) + magnet...②

UCA2-B - T - X - 10 - 25

- X: Fixing method (Item Ⓐ on page 652)
- 10: Bore size (Item Ⓑ on page 652)
- 25: Stroke (Item Ⓓ on page 652)

● Mounting bracket set (including switch rail)...③

UCA2-B - T - X - 10 - 25 - SW - RAIL

- X: Fixing method (Item Ⓐ on page 652)
- 10: Bore size (Item Ⓑ on page 652)
- 25: Stroke (Item Ⓓ on page 652)

● Switch body only...④

SW - T0H

- T0H: Switch model No. (Item Ⓔ on page 652)

1) When changing from the type without switch to the type with T-switch

Changed content	Switch required	Switch not required
UCA2-B-[X.Y] → UCA2-BL-[X.Y]	② + ④	②

* A switch can be installed separately even if “switch not required” is selected. (when you already have a T-switch, etc.)

2) When only the magnet for T-switch is installed

Changed content	Switch required	Switch not required
UCA2-BL-[X.Y] → UCA2-BL-[X.Y] Without switch With switch	①	③

When it was not possible to install a switch in UCA2-BL and up models. (Magnet only installed)

3) When changing from the type with S type switch to the type with T-switch

Changed content	Switch required	Switch not required
S type switch → T-switch	② + ④	-

* Set of switch rail, mounting bracket and switch body will be replaced.

How to order shock absorber set

● For ø10

UCA2-10-NCK

● For ø16 to ø32 (common)

UCA2-16-NCK

Specifications for rechargeable battery

(Catalog No. CC-1226A)

● Design compatible with rechargeable battery manufacturing process.

UCA2-B - …… - P4*

LCM
LCR
LCG
LCW
LCX
STM
STG
STS/STL
STR2
UCA2
ULK*
JSK/M2
JSG
JSC3/JSC4
USSD
UFCD
USC
UB
JSB3
LMB
LML
HCM
HCA
LBC
CAC4
UCAC2
CAC-N
UCAC-N
RCS2
RCC2
PCC
SHC
MCP
GLC
MFC
BBS
RRC
GRC
RV3*
NHS
HRL
LN
Hand
Chuk
MecHnd/Chuk
ShkAbs
FJ
FK
SpdContr
Ending

Internal structure and parts list

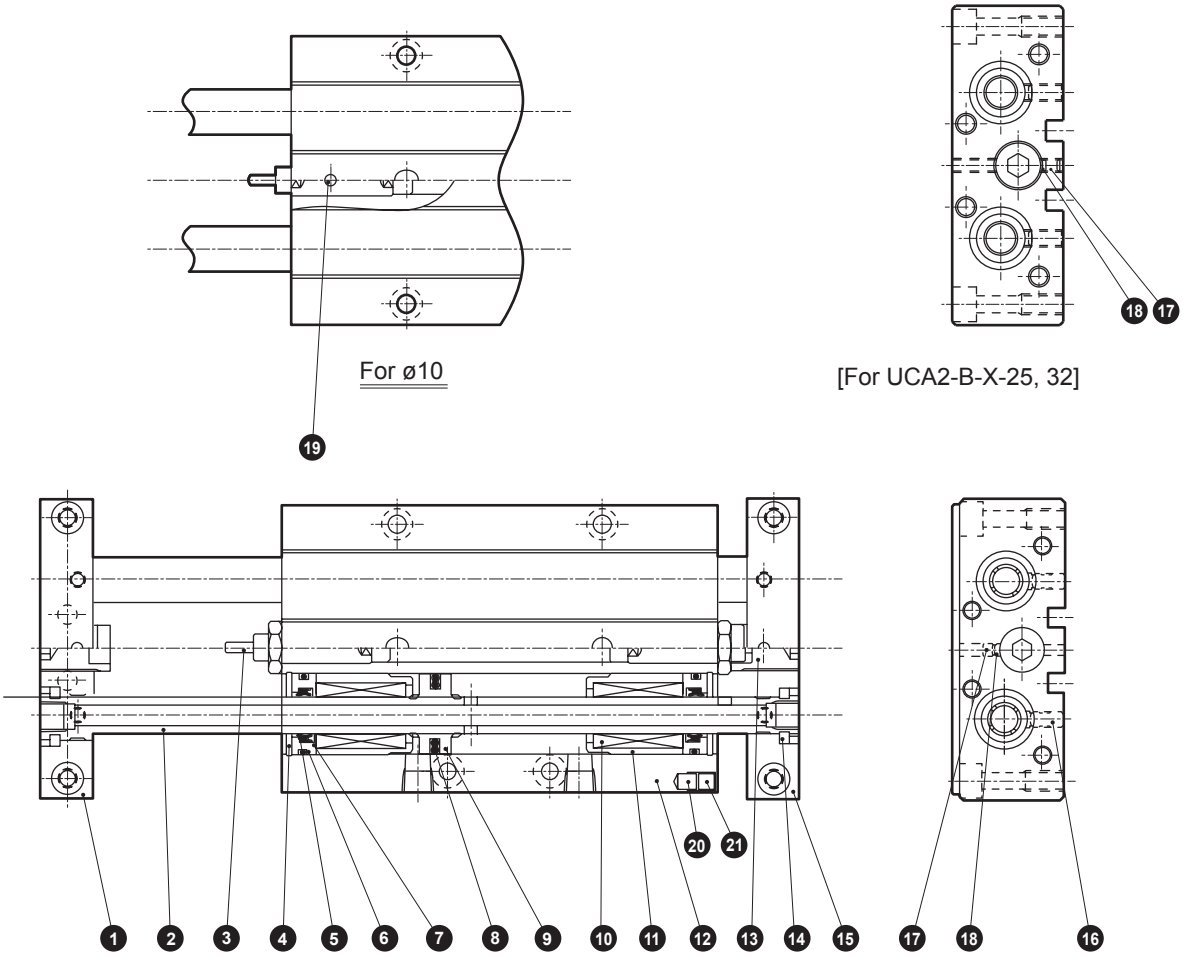

No.	Part name	Material	Remarks	No.	Part name	Material	Remarks
1	End plate (A)	Aluminum alloy	Alumite	11	Housing	Aluminum alloy	ø25 and ø32 only
2	Piston rod	Steel	Industrial chrome plating	12	Cylinder body	Aluminum alloy	Hard alumite
3	Shock absorber		ø10:UCA2-10-NCK ø16 to 32:UCA2-16-NCK	13	Stopper	Steel	Chromate
				14	Split ring	Steel	Black finish
4	C-snap ring for hole	Steel	Zinc phosphate	15	End plate (B)	Aluminum alloy	Alumite
5	Rod packing	Nitrile rubber		16	Hexagon socket set screw	Alloy steel	Black finish
6	Rod metal gasket	Nitrile rubber		17	Hexagon socket set screw	Alloy steel	
7	Rod metal	Aluminum alloy	Chromate	18	Set shoe	Aluminum alloy	
8	Piston packing	Nitrile rubber		19	Hexagon socket set screw	Alloy steel	
9	Piston	Aluminum alloy		20	Magnet	Special alloy	UCA2-L-Y only
10	Ball bearing			21	Hexagon socket set screw	Stainless steel	UCA2-L-Y only

Repair parts list

Bore size (mm)	Kit No.	Repair parts No.
ø10	UCA2-10K	5 6 8 16
ø16	UCA2-16K	
ø25	UCA2-25K	
ø32	UCA2-32K	

Note: The repair parts are common between the metal bush bearing and ball bearing.

LCM
LCR
LCG
LCW
LCX
STM
STG
STS/STL
STR2
UCA2
ULK*
JSK/M2
JSG
JSC3/JSC4
USSD
UFCD
USC
UB
JSB3
LMB
LML
HCM
HCA
LBC
CAC4
UCAC2
CAC-N
UCAC-N
RCS2
RCC2
PCC
SHC
MCP
GLC
MFC
BBS
RRC
GRC
RV3*
NHS
HRL
LN
Hand
Chuk
MecHnd/Chuk
ShkAbs
FJ
FK
SpdContr
Ending

Dimensions: ø10

● Body fixing (X)

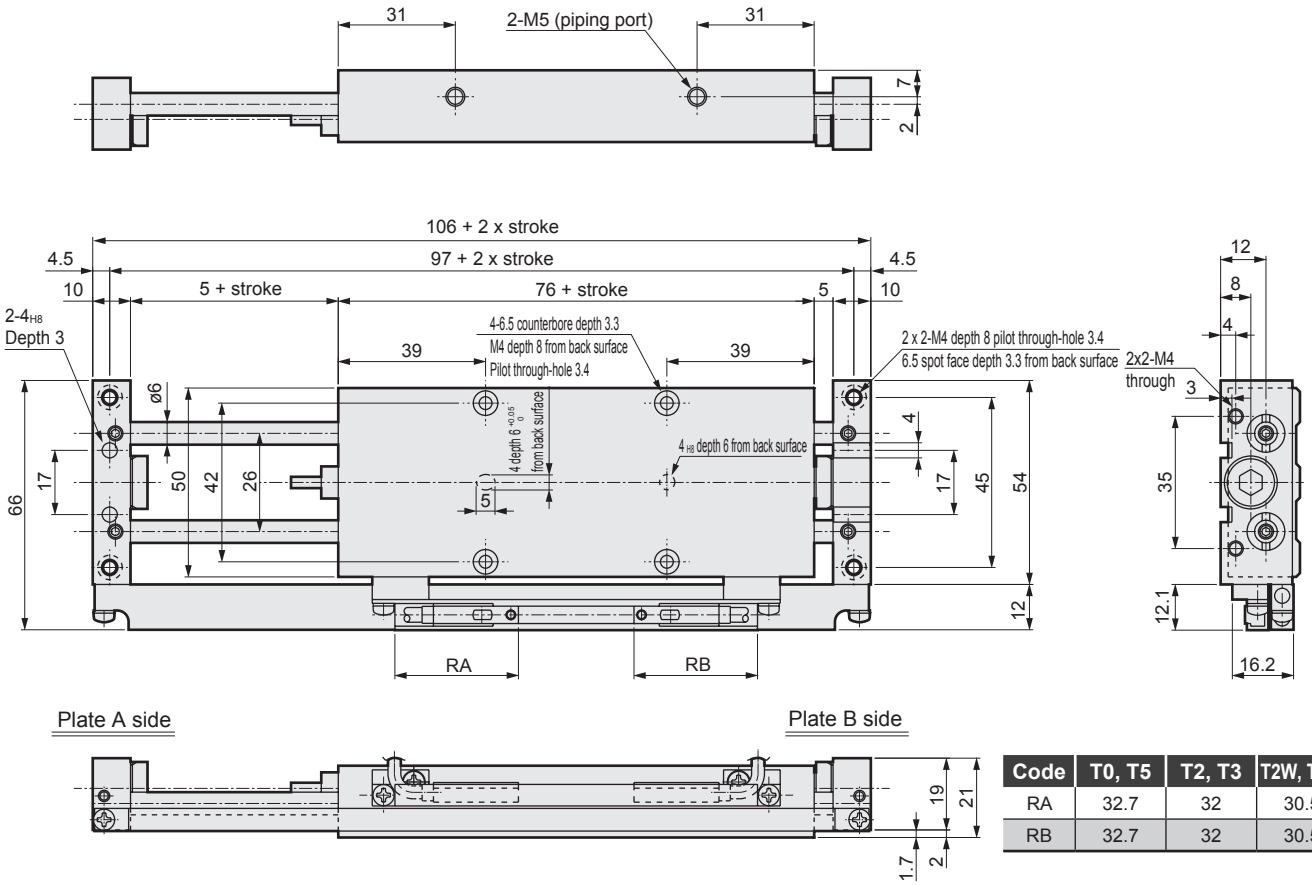

Code	T0, T5	T2, T3	T2W, T3W
RA	32.7	32	30.5
RB	32.7	32	30.5

● Plate fixing (Y)

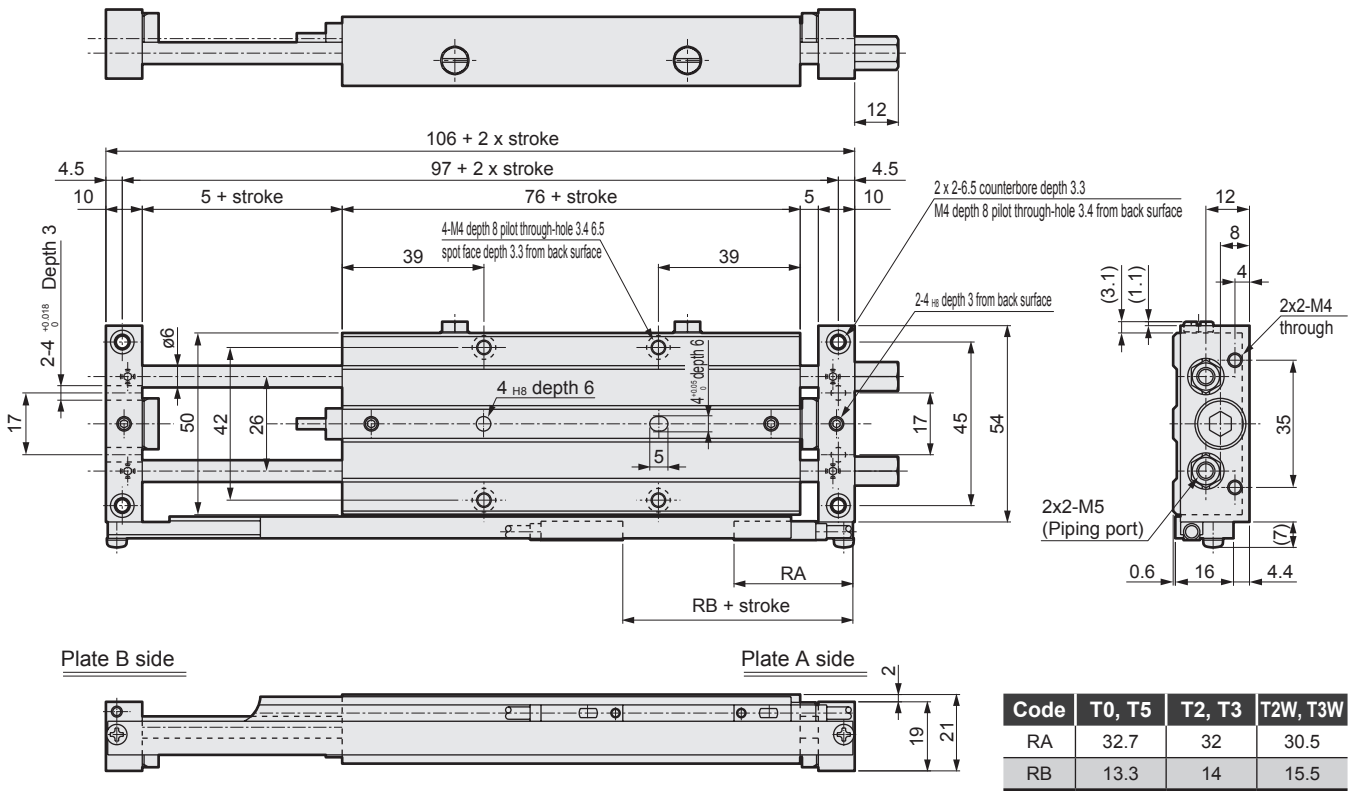

Code	T0, T5	T2, T3	T2W, T3W
RA	32.7	32	30.5
RB	13.3	14	15.5

* Adjusting to a longer stroke with the stopper may cause malfunction.
Refer to page 667 for details.

LCM
LCR
LCG
LCW
LCX
STM
STG
STS/STL
STR2
UCA2
ULK*
JSK/M2
JSG
JSC3/JSC4
USSD
UFCD
USC
UB
JSB3
LMB
LML
HCM
HCA
LBC
CAC4
UCAC2
CAC-N
UCAC-N
RCS2
RCC2
PCC
SHC
MCP
GLC
MFC
BBS
RRC
GRC
RV3*
NHS
HRL
LN
Hand
Chuk
MecHnd/Chuk
ShkAbs
FJ
FK
SpdContr
Ending

Dimensions: ø16 CAD

● Body fixing (X)

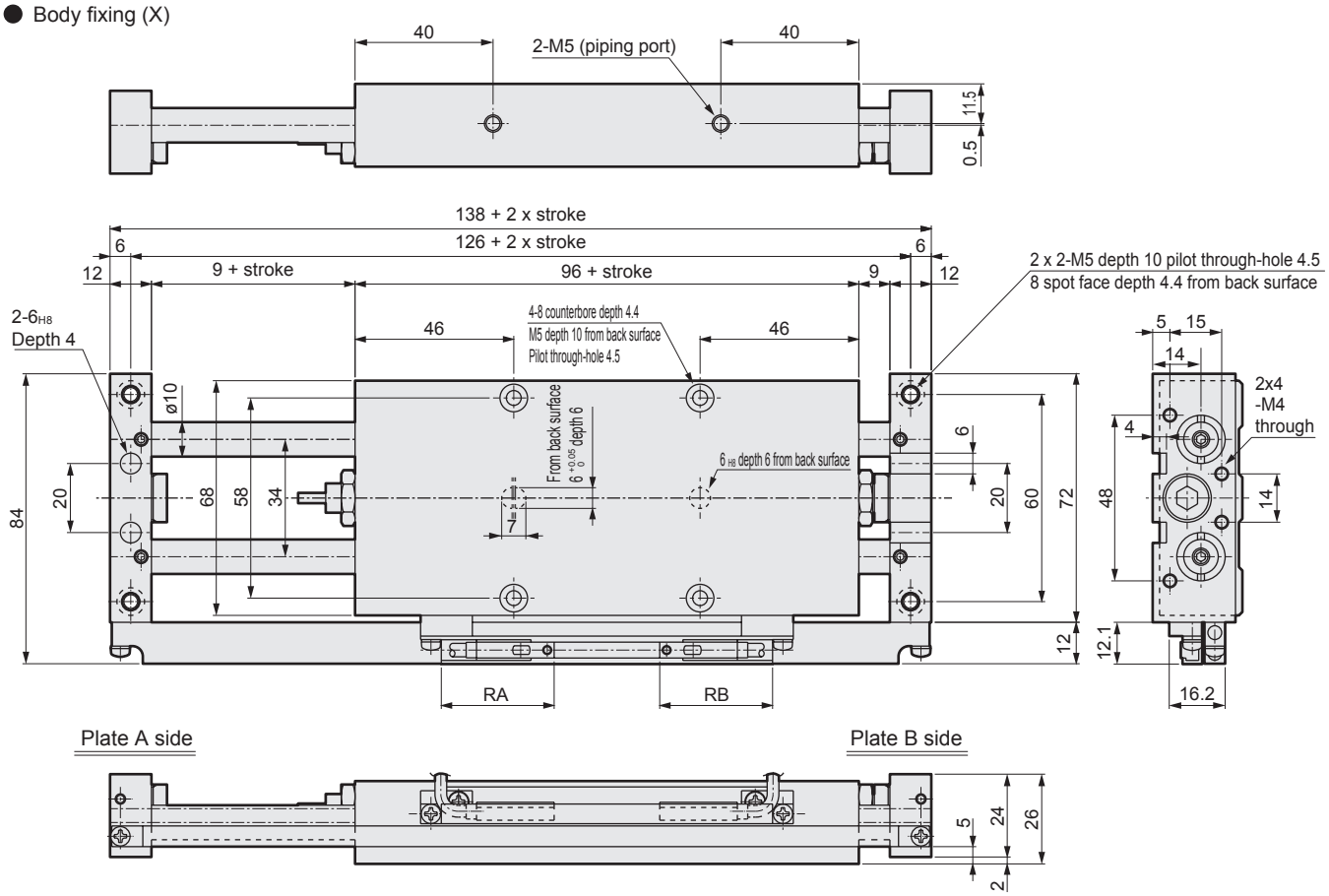

Code	T0, T5	T2, T3	T2W, T3W
RA	32.7	32	30.5
RB	32.7	32	30.5

● Plate fixing (Y)

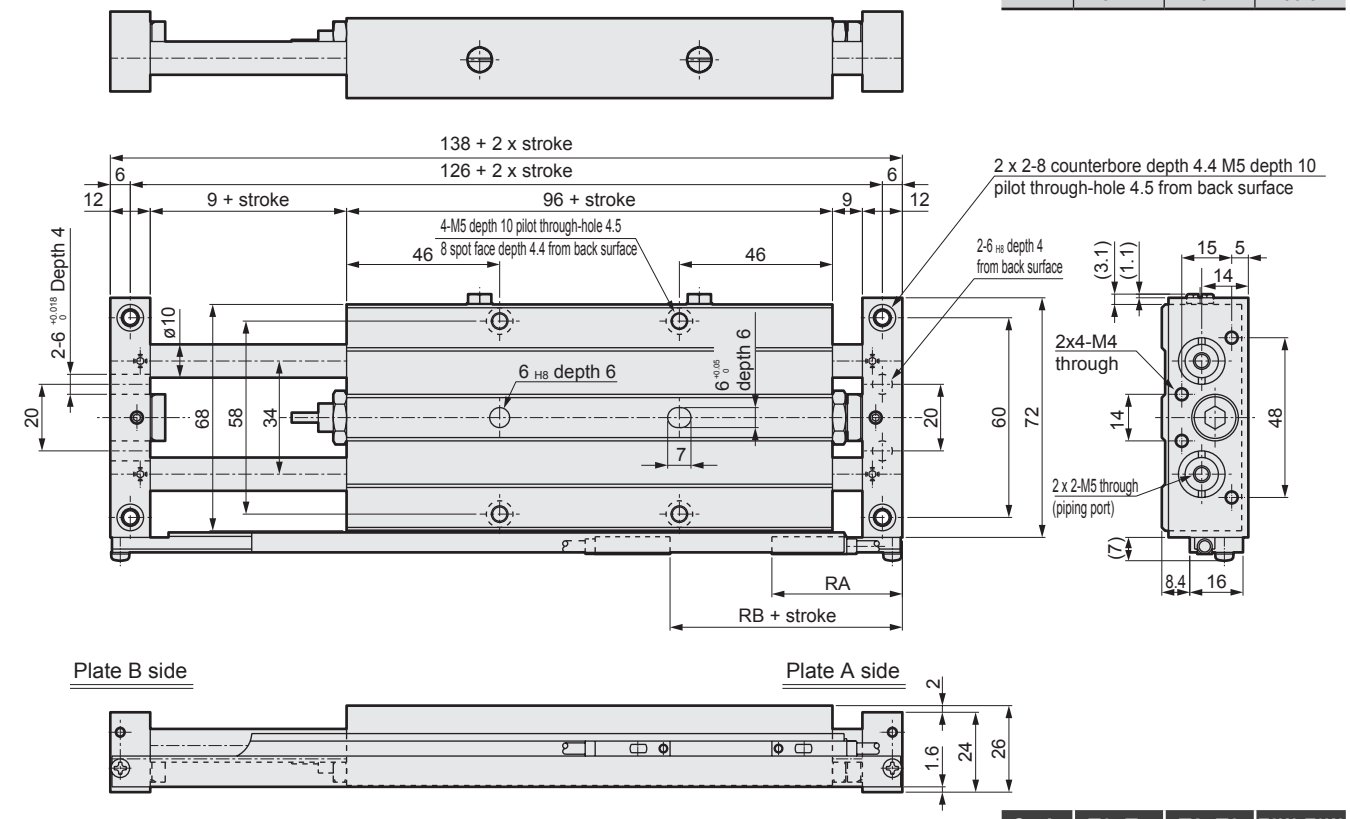

Code	T0, T5	T2, T3	T2W, T3W
RA	38.7	38	36.5
RB	19.3	20	21.5

* Adjusting to a longer stroke with the stopper may cause malfunction. Refer to page 667 for details.

Dimensions: ø25

● Body fixing (X)

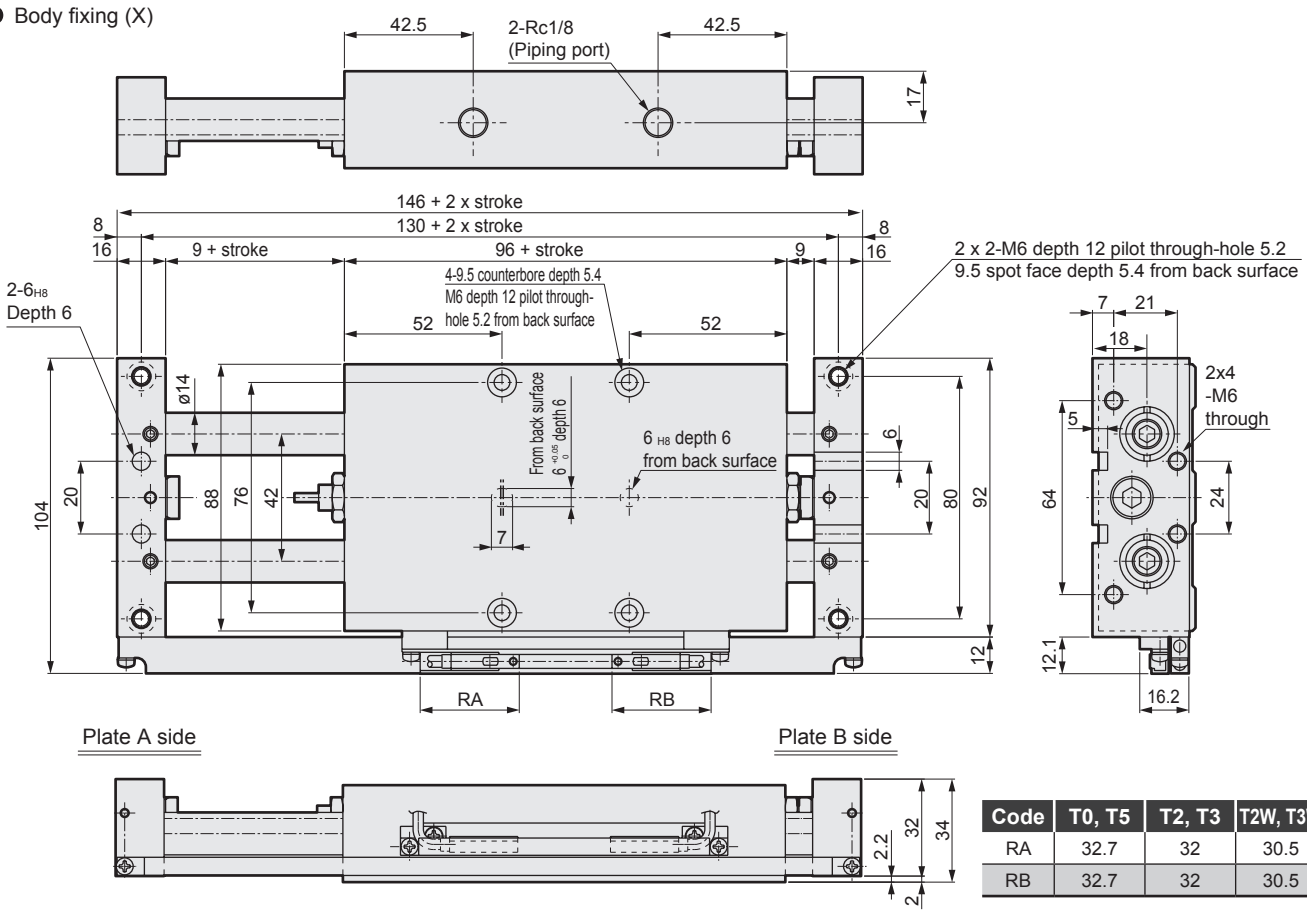

Code	T0, T5	T2, T3	T2W, T3W
RA	32.7	32	30.5
RB	32.7	32	30.5

● Plate fixing (Y)

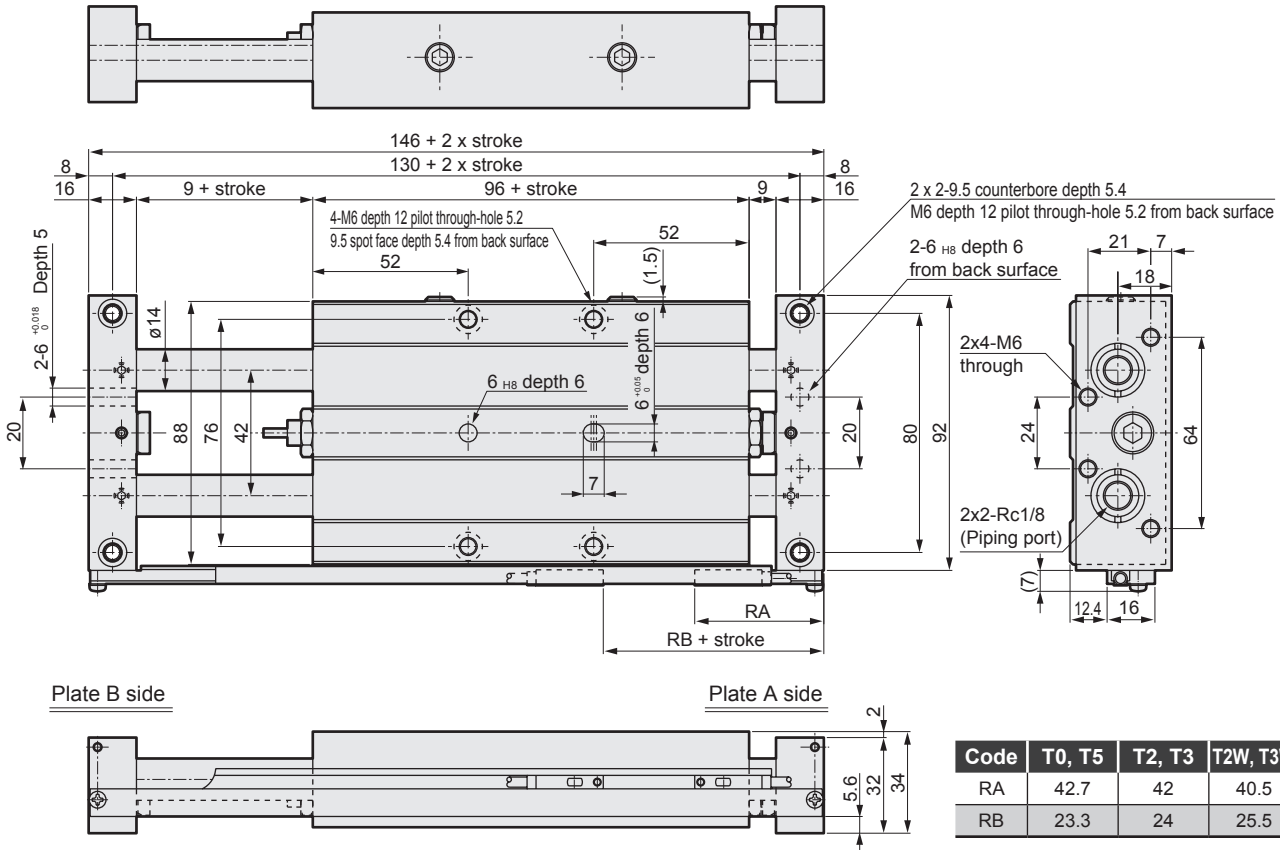

Code	T0, T5	T2, T3	T2W, T3W
RA	42.7	42	40.5
RB	23.3	24	25.5

* Adjusting to a longer stroke with the stopper may cause malfunction.
Refer to page 667 for details.

LCM
LCR
LCG
LCW
LCX
STM
STG
STS/STL
STR2
UCA2
ULK*
JSK/M2
JSG
JSC3/JSC4
USSD
UFCD
USC
UB
JSB3
LMB
LML
HCM
HCA
LBC
CAC4
UCAC2
CAC-N
UCAC-N
RCS2
RCC2
PCC
SHC
MCP
GLC
MFC
BBS
RRC
GRC
RV3*
NHS
HRL
LN
Hand
Chuk
MecHnd/Chuk
ShkAbs
FJ
FK
SpdContr
Ending

Dimensions: ø32

● Body fixing (X)

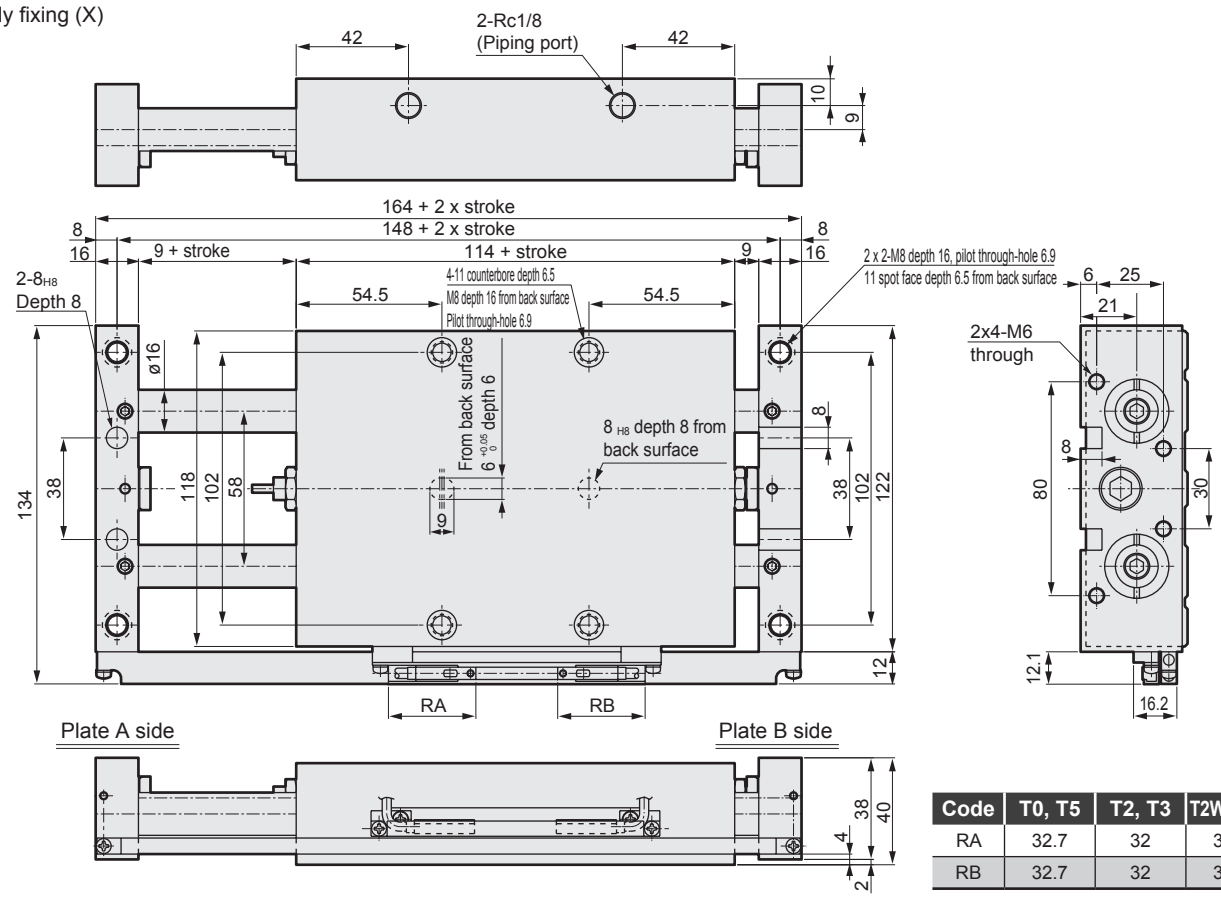

Code	T0, T5	T2, T3	T2W, T3W
RA	32.7	32	30.5
RB	32.7	32	30.5

● Plate fixing (Y)

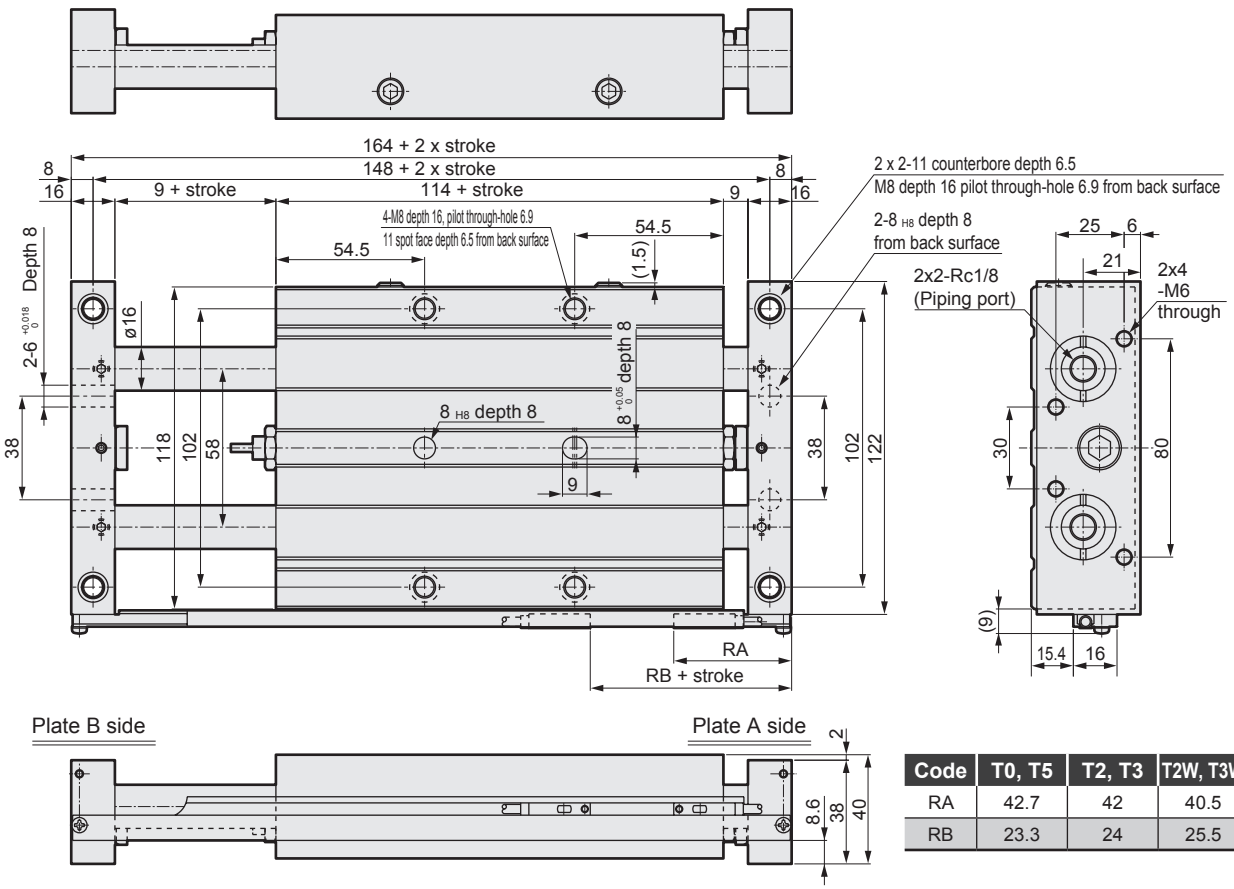

Code	T0, T5	T2, T3	T2W, T3W
RA	42.7	42	40.5
RB	23.3	24	25.5

* Adjusting to a longer stroke with the stopper may cause malfunction.
Refer to page 667 for details.

Dimensions: Adjusting stopper

● UCA2-B-X/Y-10/16/25/32-* *-P1* (single adjusting stopper)

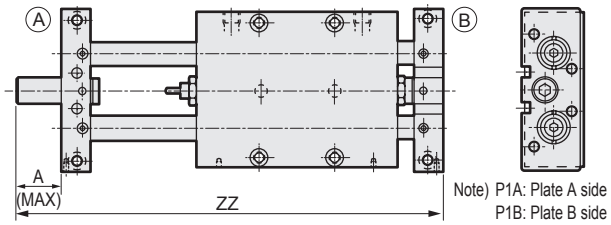

Note) P1A: Plate A side
P1B: Plate B side

Model No.	A (MAX)	ZZ							
		25st	50st	75st	100st	125st	150st	175st	200st
UCA2-B-10	25	181	231	281	331	-	-	-	-
UCA2-B-16		213	263	313	363	413	463	513	563
UCA2-B-25		221	271	321	371	421	471	521	571
UCA2-B-32		239	289	339	389	439	489	539	589

● UCA2-B-X/Y-10/16/25/32-* *-P2* (double adjusting stoppers)

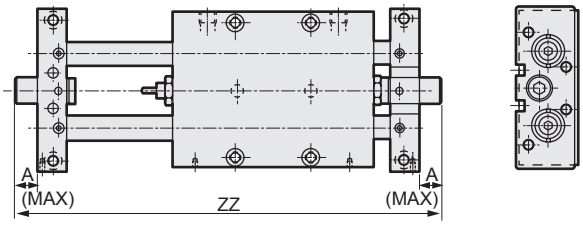

Model No.	A(MAX)	ZZ							
		25st	50st	75st	100st	125st	150st	175st	200st
UCA2-B-10	12.5	181	231	281	331	-	-	-	-
UCA2-B-16		213	263	313	363	413	463	513	563
UCA2-B-25		221	271	321	371	421	471	521	571
UCA2-B-32		239	289	339	389	439	489	539	589

Stopper dimensions

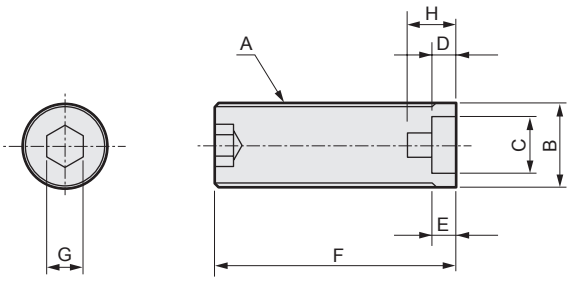

Code / Bore size (mm)	A	B	C	D	E	F		G	H
ø10	M14x1	ø14	ø10	4	4	Standard	14.5	6	8
						P2	27		
						P1	39.5		
ø16	M14x1	ø14	ø9.4	8	4	Standard	17	6	-
						P2	29.5		
						P1	42		
ø25	M14x1	ø14	ø9.4	6.5	4	Standard	21	6	-
						P2	33.5		
						P1	46		
ø32	M16x1	ø16	ø9.4	5.5	4	Standard	21	8	-
						P2	33.5		
						P1	46		

Model No. of discrete adjusting stoppers

● Standard

Part/part name / Bore size (mm)	Standard stopper		Single stopper		Double stoppers	
	Model No.	Weight g	Model No.	Weight g	Model No.	Weight g
ø10	UCA2-P-10	12	UCA2-P1-10	38	UCA2-P2-10	25
ø16	UCA2-P-16	12	UCA2-P1-16	38	UCA2-P2-16	25
ø25	UCA2-P-25	17	UCA2-P1-25	44	UCA2-P2-25	30
ø32	UCA2-P-32	22	UCA2-P1-32	58	UCA2-P2-32	40

■ Stopper adjustment method

- To adjust the stroke, loosen the fixing set screw and turn the stopper bolt. After adjustment, tighten the fixing set screw. Recommended tightening torque of set screw: 1.4 N·m
- Adjustable ranges of the stoppers are shown in Table A.
- Do not adjust to a longer stroke. Doing so may cause malfunction. Keep the standard stopper from protruding from the end plate.
  Keep the single adjusting stopper P1 and double adjusting stoppers P2 from protruding more than the initial state.

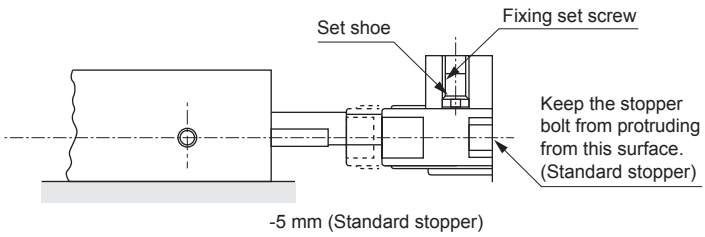

Table A

Item	Adjustable stroke	Initial protrusion B
Standard stopper	Each side -5 mm	0 mm
Single adjusting stopper P1A	Plate A side -30 mm Plate B side -5 mm	P1 : 25 mm Standard: 0 mm
Single adjusting stopper P1B	Plate B side -30 mm Plate A side -5 mm	
Double adjusting stoppers P2	Each surface -17.5 mm	12.5 mm

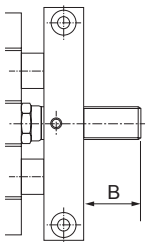

LCM
LCR
LCG
LCW
LCX
STM
STG
STS/STL
STR2
UCA2
ULK*
JSK/M2
JSG
JSC3/JSC4
USSD
UFCD
USC
UB
JSB3
LMB
LML
HCM
HCA
LBC
CAC4
UCAC2
CAC-N
UCAC-N
RCS2
RCC2
PCC
SHC
MCP
GLC
MFC
BBS
RRC
GRC
RV3*
NHS
HRL
LN
Hand
Chuk
MecHnd/Chuk
ShkAbs
FJ
FK
SpdContr
Ending

1 Sag of the piston rod due to concentrated load (reference value)

Put the center of gravity of load as close as possible to the center of the unit cylinder.

[Unit: mm]

Bore size (mm)	Stroke length (mm) / Load (N)	75	100	125	150	175	200
ø10	15	0.05	0.10	—	—	—	—
ø16	40	0.02	0.05	0.09	0.16	0.25	0.38
ø25	70	0.01	0.03	0.06	0.10	0.16	0.24
ø32	100	0.005	0.02	0.04	0.07	0.11	0.15

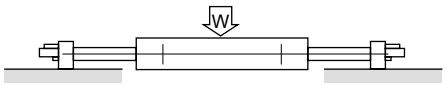

[Unit: mm]

Bore size (mm)	Stroke length (mm) / Load (N)	25	50	75	100	125	150	175	200
ø10	7	0.04	0.10	0.18	0.27	-	-	-	-
ø16	20	0.03	0.07	0.12	0.20	0.28	0.37	0.48	0.60
ø25	35	0.02	0.04	0.08	0.13	0.17	0.24	0.32	0.41
ø32	50	0.01	0.03	0.06	0.10	0.14	0.21	0.29	0.38

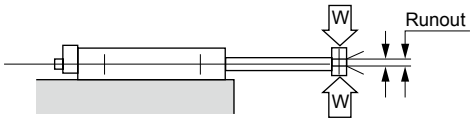

LCM
LCR
LCG
LCW
LCX
STM
STG
STS/STL
STR2
UCA2
ULK*
JSK/M2
JSG
JSC3/JSC4
USSD
UFCD
USC
UB
JSB3
LMB
LML
HCM
HCA
LBC
CAC4
UCAC2
CAC-N
UCAC-N
RCS2
RCC2
PCC
SHC
MCP
GLC
MFC
BBS
RRC
GRC
RV3*
NHS
HRL
LN
Hand
Chuk
MecHnd/Chuk
ShkAbs
FJ
FK
SpdContr
Ending

2 Determination of allowable load

1. Vertical load

X type (single support)

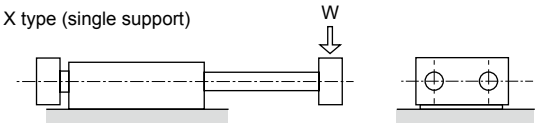

X type (double support)

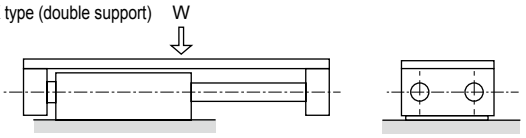

Y type

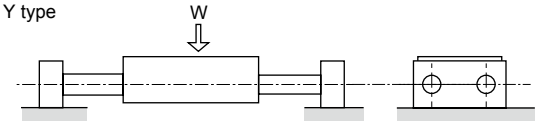

[Unit: N]

Type / Fixing method / Bore size (mm)	X type Single support	X type Double support	Y type
ø10	6.9	14.7	
ø16	19.6	39.2	
ø25	34.3	68.6	
ø32	49	98	

W = Load N

2. With overhang load applied

Calculate the load as described below to select the bore size.
However, the overhang load (W) should be equal to or less than the vertical load in 1 above and the overhang length (L) should be equal to or less than 100 mm.

2-1. Conditions and items required in calculation of the allowable load

W = Load (N)
L = Amount of overhang (mm)
V = Operating speed (mm/s)
S = Stroke length (mm)
F = Max. load applied to each bearing (N)

W_1 = End plate weight (kg)
W_2 = Cylinder body weight (kg)
L_1 = Length from the end plate to the body (mm)
L_2 = Cylinder body length (mm)
L_3 = Length from the rod center to the cylinder body (mm)
L_4 = Pitch between rods (mm)

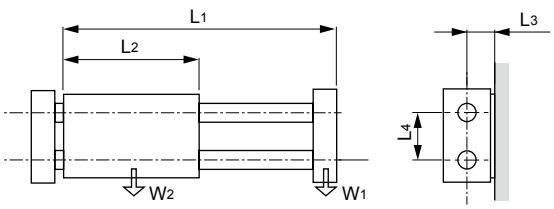

Bore size (mm) / Type \ Code		L_1	L_2	L_3	L_4	W_1	W_2
ø10	Metal	69 + 2·S	54+S	9	26	0.099 + 7 x 10^{-4}·S	0.174 + 2 x 10^{-3}·S
	Bearing	91 + 2·S	76+S	9	26	0.109 + 7 x 10^{-4}·S	0.214 + 2 x 10^{-3}·S
ø16	Metal	71 + 2·S	50+S	12	34	0.199 + 21 x 10^{-4}·S	0.334 + 3.2 x 10^{-3}·S
	Bearing	117 + 2·S	96+S	12	34	0.239 + 21 x 10^{-4}·S	0.338 + 3.2 x 10^{-3}·S
ø25	Metal	87 + 2·S	62+S	16	42	0.456 + 36 x 10^{-4}·S	0.6 + 4.7 x 10^{-3}·S
	Bearing	121 + 2·S	96+S	16	42	0.509 + 36 x 10^{-4}·S	0.615 + 4.7 x 10^{-3}·S
ø32	Metal	100 + 2·S	75+S	19	58	0.636 + 47 x 10^{-4}·S	0.92 + 7 x 10^{-3}·S
	Bearing	139 + 2·S	114+S	19	58	0.714 + 47 x 10^{-4}·S	1.313 + 7 x 10^{-3}·S

LCM
LCR
LCG
LCW
LCX
STM
STG
STS/STL
STR2
UCA2
ULK*
JSK/M2
JSG
JSC3/JSC4
USSD
UFCD
USC
UB
JSB3
LMB
LML
HCM
HCA
LBC
CAC4
UCAC2
CAC-N
UCAC-N
RCS2
RCC2
PCC
SHC
MCP
GLC
MFC
BBS
RRC
GRC
RV3*
NHS
HRL
LN
Hand
Chuk
MecHnd/Chuk
ShkAbs
FJ
FK
SpdContr
Ending

2-2. Calculation of allowable load

Calculate F from “Mounting orientation examples” and check that Fk obtained with the following formula is within the allowable value in Table 3.

$F_K = F \times K$

F_K : Operating speed load (N)

K : Speed coefficient

Table 3 Allowable operating speed load (F_K)

Bore size (mm)	Allowable Fk (N)
ø10	21.6
ø16	75.5
ø25	103.0
ø32	157.0

Speed coefficient

Operating speed (mm/s)	K
30 ≤ V < 100	1.0
100 ≤ V < 200	1.1
200 ≤ V < 300	1.2

2-3. Mounting orientation examples

	X type (single support)	X type (double support)	Y type
Overhang load is applied vertically. Vertical direction	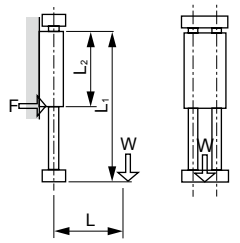	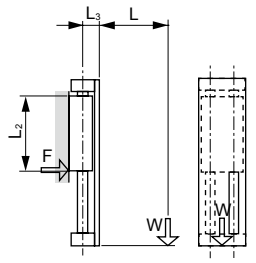	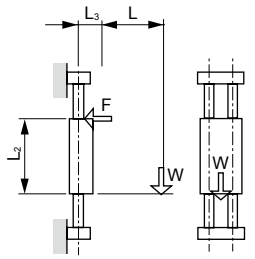
Max. load applied to each bearing (N)	$F = \frac{L}{2L_2} \cdot W$	$F = \frac{L+L_3}{2 \cdot L_2} \cdot W$	$F = \frac{L+L_3}{2 \cdot L_2} \cdot W$
Overhang load is applied perpendicularly to the stroke length. ① Horizontal direction ② Horizontal side mount	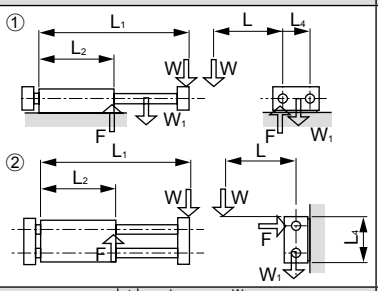	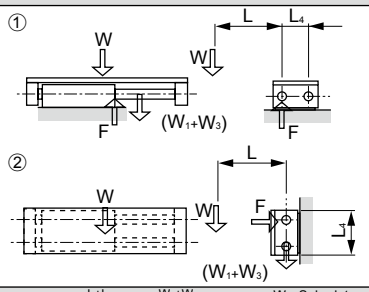	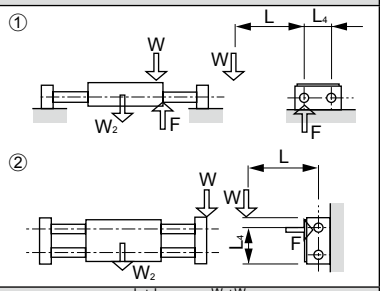
Max. load applied to each bearing (N)	① $F = (\frac{L+L_4}{2 \cdot L_4} + \frac{L_1}{2L_2})W + \frac{W_1}{4}$ ② $F = \sqrt{(\frac{L}{2 \cdot L_4} \cdot W)^2 + (\frac{L_1}{2L_2} \cdot W + \frac{W_1}{4})^2}$	① $F = \frac{L+L_4}{2 \cdot L_4} \cdot W + \frac{W_1+W_3}{4}$ ② $F = \sqrt{(\frac{L}{2 \cdot L_4} \cdot W)^2 + (\frac{W_1+W_3}{4})^2}$ W3: Sub-plate Weight (kg)	① $F = \frac{L+L_4}{2 \cdot L_4} \cdot W + \frac{W_1+W_2}{4}$ ② $F = \sqrt{(\frac{L}{2 \cdot L_4} \cdot W)^2 + (\frac{W_2}{4})^2}$
Overhang load is applied laterally. Vertical direction	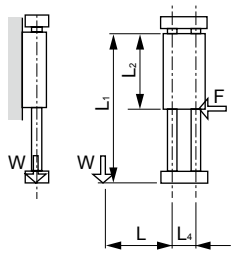	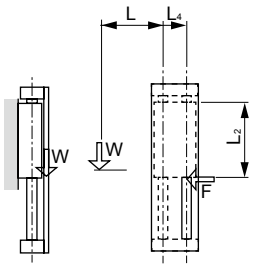	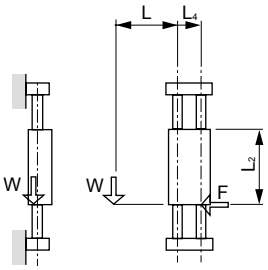
Max. load applied to each bearing (N)	$F = \frac{L+L_4}{L_2} \cdot W$	$F = \frac{L+L_4}{L_2} \cdot W$	$F = \frac{L+L_4}{L_2} \cdot W$
Overhang load is applied along the stroke length. Horizontal direction Horizontal side mount	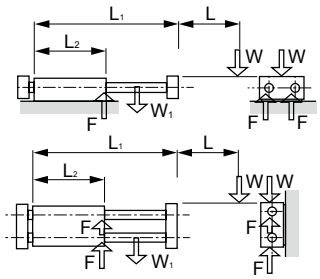		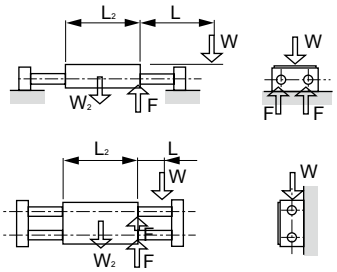
Max. load applied to each bearing (N)	$F = \frac{L+L_1}{2 \cdot L_2} \cdot W + \frac{W_1}{4}$		$F = \frac{L+L_2}{2 \cdot L_2} \cdot W + \frac{W_2}{4}$

3 Calculation of load factor

1. Refer to Table 4 and calculate the necessary thrust according to the weight, direction and mounting orientation of the load.

Table 4

	Body fixing (single support)	Body fixing (double support)	Plate fixing
Load is applied to the cylinder center. Horizontal direction	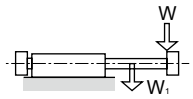	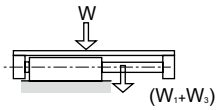	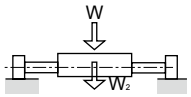
Required thrust	$f=\mu(W+W_1)$	$f=\mu(W+W_1+W_3)$	$f=\mu(W+W_2)$
Overhang load is applied vertically. Vertical direction	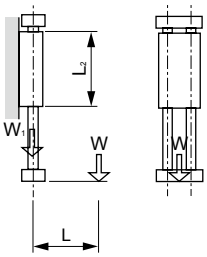	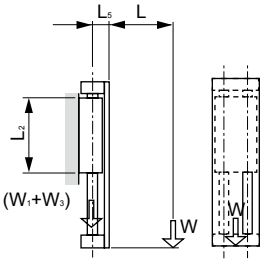	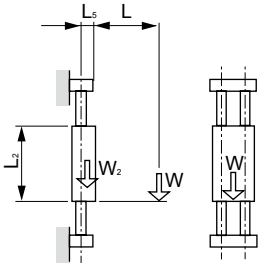
Required thrust	$f=\frac{2\mu\cdot L}{L_2}\cdot W+W+W_1$	$f=\frac{2\mu\cdot(L+L_5)}{L_2}\cdot W+W+W_1+W_3$	$f=\frac{2\mu\cdot(L+L_5)}{L_2}\cdot W+W+W_2$
Overhang load is applied perpendicularly to the stroke length. ① Horizontal direction ② Horizontal side mount	① 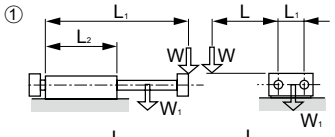 ② 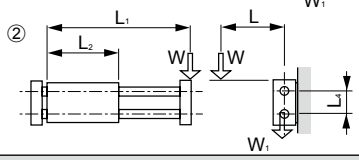	① 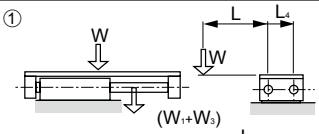 ② 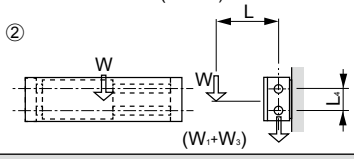	① 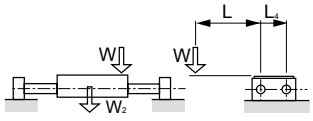 ② 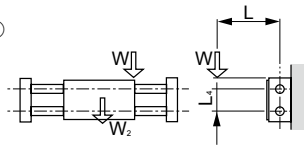
Required thrust	① $f=\mu\{(\frac{2\cdot L+L_4}{L_4}+\frac{2\cdot L+L_2}{L_2})\cdot W+W+W_1\}$ ② $f=\mu\cdot\sqrt{(\frac{2\cdot L}{L_4}\cdot W)^2+(\frac{2\cdot L_1+L_2}{L_2}\cdot W+W+W_1)^2}$	① $f=\mu\cdot(\frac{2\cdot L+L_4}{L_4}\cdot W+W+W_1+W_3)$ ② $f=\mu\cdot\sqrt{(\frac{2\cdot L}{L_4}\cdot W)^2+(W+W_1+W_3)^2}$	① $f=\mu(\frac{2\cdot L+L_4}{L_4}\cdot W+W+W_2)$ ② $f=\mu\cdot\sqrt{(\frac{2\cdot L}{L_4}\cdot W)^2+(W+W_2)^2}$
Overhang load is applied laterally. Vertical direction	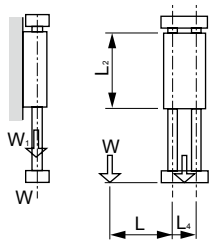	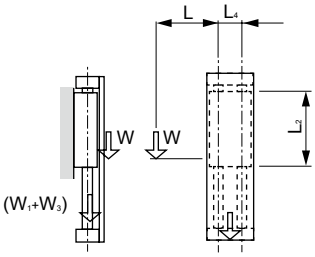	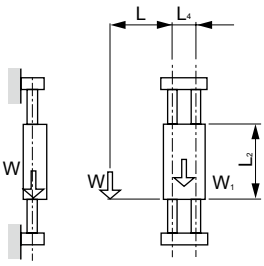
Required thrust	$f=\frac{\mu(2\cdot L+L_4)}{L_2}\cdot W+W+W_1$	$f=\frac{\mu(2\cdot L+L_4)}{L_2}\cdot W+W+W_1+W_4$	$f=\frac{\mu(2\cdot L+L_4)}{L_2}\cdot W+W+W_2$
Overhang load is applied along the stroke length. Horizontal direction Horizontal side mount	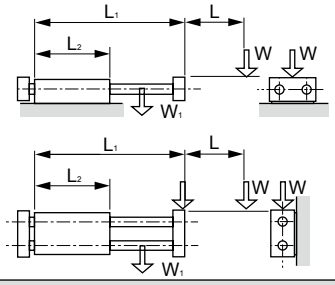	Note) W_3: Sub-plate weight (kg)	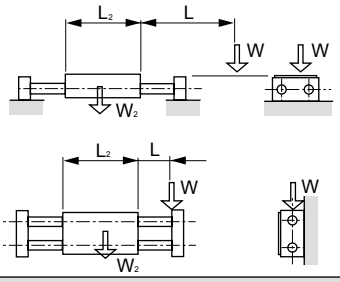
Required thrust	$f=\mu\{\frac{2(L+L_1)-L_2}{L_2}\cdot W+W+W_1\}$		$f=\mu(\frac{2\cdot L+L_2}{L_2}\cdot W+W+W_2)$

f : Required thrust N
μ : Coefficient of friction Metal bush bearing 0.3
Ball bearing 0.1

For the other items and dimensions, refer to “Determination of allowable load”.

Technical data ❸ Calculation of load factor

2.Calculate the load factor from the necessary thrust obtained in 1, the theoretical thrust table and the thrust efficiency graph.
(The load factor must be 50% or less.)

$$\omega = \frac{f}{B} \times 100 \leq 50$$

$$B = \frac{a}{100} \cdot A$$

ω : Load factor (%)
f : Required thrust (N)
A : Theoretical thrust (N)
a : Thrust efficiency (%)
B : Effective thrust (N)

Theoretical thrust

[Unit: N]

Model No.	Working pressure MPa								
	0.1	0.2	0.3	0.4	0.5	0.6	0.7	0.8	0.9
UCA2-10	10	20	29	39	49	59	69	78	88
UCA2-16	25	48	73	96	121	145	169	193	217
UCA2-25	66	132	198	265	330	396	463	528	594
UCA2-32	119	236	355	474	591	710	828	846	1065
UCA2-B-10	10	20	29	39	49	59	69	78	88
UCA2-B-16	25	48	73	96	121	145	169	193	217
UCA2-B-25	66	132	198	265	330	396	463	528	594
UCA2-B-32	119	236	355	474	591	710	828	946	1065

Thrust efficiency

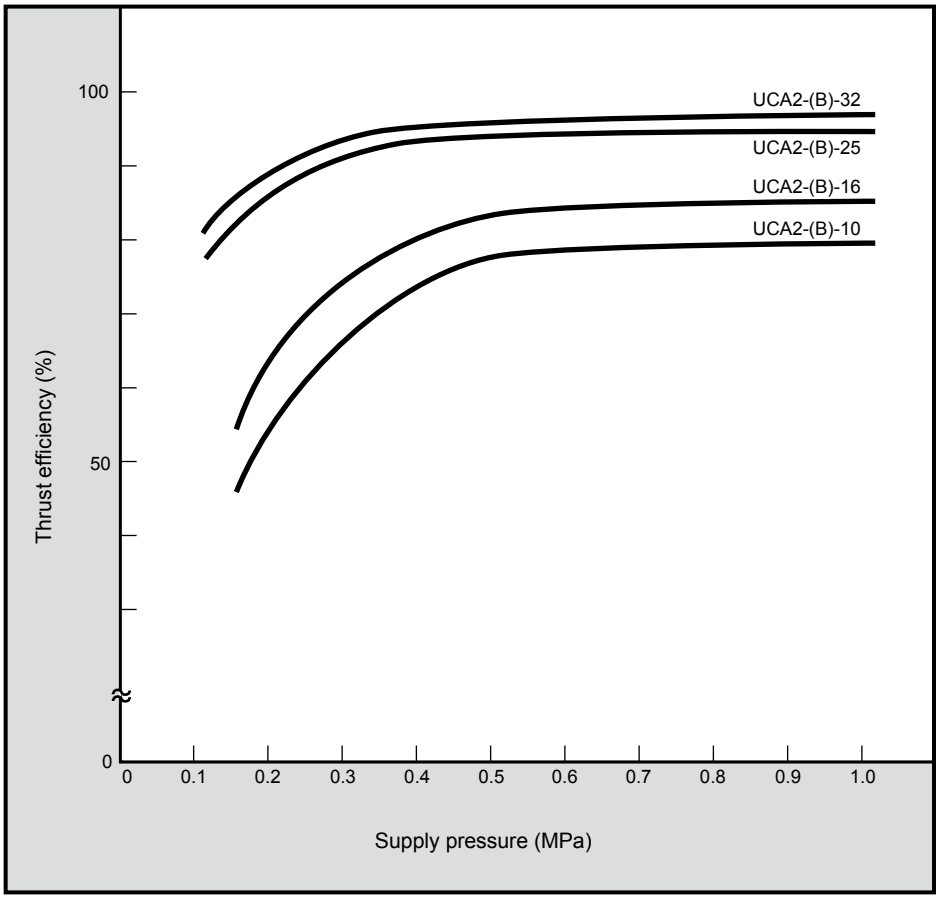

4 Formula for kinetic energy calculation

Calculate the kinetic energy from the load weight (W) and speed (V), and check that it is within the allowable value in Table 7. If it is more than the allowable value, use a larger cylinder or add an external shock absorber to keep it within the allowable value.
The speed mentioned here is the speed of the piston entering the cushion, not the average speed. Therefore, calculate the speed of the piston entering the cushion with the formula (1).

$$E = \frac{1}{2}mV^2 + f\,S_1$$

$$Va = \frac{S_2}{t}$$

$$V = Va \times \left(1+1.5\frac{\omega}{100}\right) \text{——(1)}$$

E : Kinetic energy (J)
m : Weight (kg)
V : Cushion entry speed (m/s)
f : Thrust (N)
S_1 : Shock absorber stroke length (m)
Va : Average speed (m/s)
S_2 : Cylinder stroke length (m)
t : Travel time (s)
ω : Load factor (%)

■ Table 7 Allowable absorbed energy value

Bore size (mm)	Allowable absorbed energy (J)
ø10	0.25
ø16	0.65
ø25	2.4
ø32	4.5

■ Shock absorber stroke length

Bore size (mm)	Stroke length (mm)
ø10	4.5
ø16	5.0
ø25	6.5
ø32	7.0

Safety Precautions

Be sure to read this section before use.

Refer to Intro Page 73 for general information of the cylinder, and to Intro Page 80 for general information of the cylinder switch.

Product-specific cautions: Unit cylinder UCA2 Series

Mounting, installation and adjustment

1. Piping

CAUTION

■ End plate fixing (model No.: UCA2-(B)-Y)

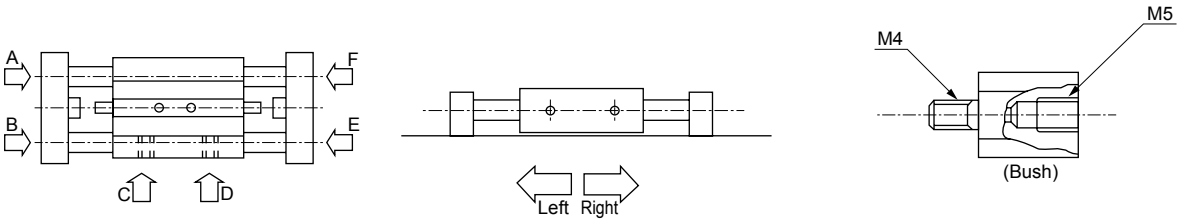

In end plate fixing, the pressurizing port and body operating direction will be as shown in the table on the right. Plug the unused piping ports before use.
Use a bush in the pressurizing port of UCA2-(B)-Y-10.
Recommended tightening torque: 1.0 to 1.4 N·m

Pressurization port	A	B	C	D	E	F
Body operating direction	Left	Right	Plugged	Plugged	Right	Left

■ Body fixing (model No.: UCA2-(B)-X)

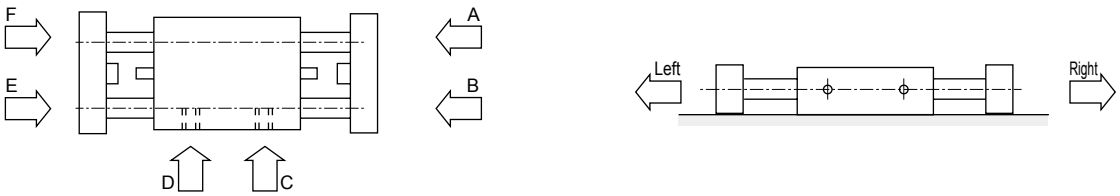

In body fixing, the pressurizing port and piston rod operating direction are shown in the table on the right. Plug the unused piping ports before use.

Pressurization port	A	B	C	D	E	F
Piston rod end operating direction	Plugged	Plugged	Left	Right	Plugged	Plugged

2. Installation

⚠ CAUTION

■ Body fixing (model No.: UCA2-(B)-X)

Mount the product with one of the following two methods.

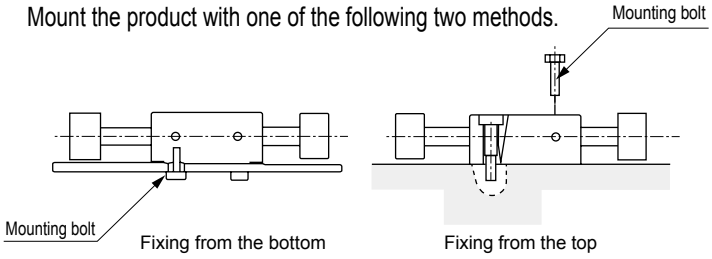

Item / Bore size (mm)	Hexagon socket head cap screw size	Quantity
ø10	M3×22 ℓ	4
ø16	M4×30 ℓ	4
ø25	M5×35 ℓ	4
ø32	M6×40 ℓ	4

Use hexagon socket head cap screws when fixing from the top.
Select appropriate hexagon socket head cap screws from the table on the right.

■ End plate fixing (model No.: UCA2-(B)-Y)

Mount the product with one of the following two methods.

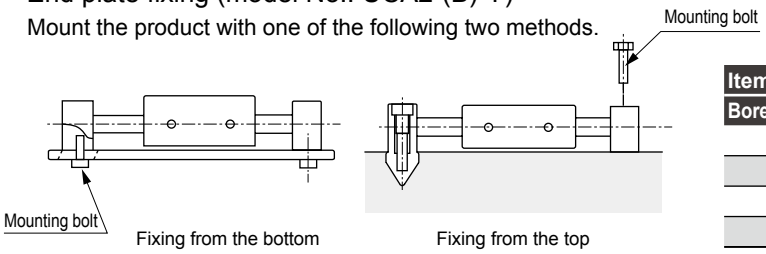

Item / Bore size (mm)	Hexagon socket head screw bolt size	Quantity
ø10	M3×22 ℓ	4
ø16	M4×30 ℓ	4
ø25	M5×35 ℓ	4
ø32	M6×40 ℓ	4

Use hexagon socket head cap screws when fixing from the top.
Select appropriate hexagon socket head cap screws from the table on the right.

■ Stopper adjustment method

- To adjust the stroke length, loosen the fixing set screw and turn the stopper bolt. After adjustment, tighten the fixing set screw.
  Recommended tightening torque of set screw: 1.4 N·m
- Adjustable ranges of the stoppers are shown in Table A.
- Do not adjust to a longer stroke length. Doing so may cause malfunction. Keep the standard stopper from protruding from the end plate.
  Keep the single adjusting stopper P1 and double adjusting stoppers P2 from protruding more than the initial state.

Table A

Item	Adjustable stroke length	Initial protrusion B
Standard stopper	Each side -5 mm	0 mm
Single adjusting stopper P1A	Plate A side -30 mm Plate B side -5 mm	P1:25 mm Standard: 0 mm
Single adjusting stopper P1B	Plate B side -30 mm Plate A side -5 mm	
Double adjusting stoppers P2	Each surface -17.5 mm	12.5 mm

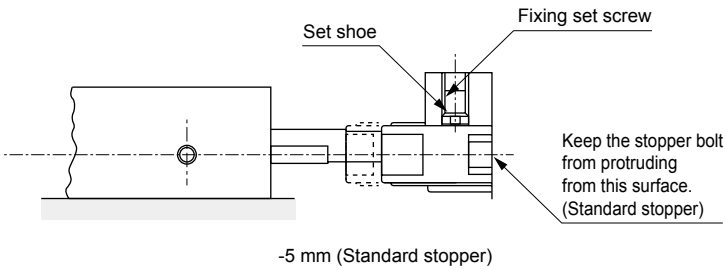

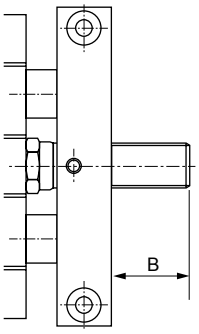

■ CKD's shock absorber is a repair part.

Replace it when the energy absorption performance has degraded or the operation is not smooth.

With brake/position locking cylinder

	Page
Brake cylinder **ULKP/ULK** Series	671
Brake cylinder (small bore size ø20 to ø40) **JSK2/JSM2** Series	701
Tie rod cylinder with brake **JSG** Series	737
Brake cylinder (medium and large bore size ø40 to ø180) **JSC3/JSC4** Series	767
Position locking compact cylinder **USSD** Series	841
Free position locking flat cylinder **UFCD** Series	885
Free position locking large bore size cylinder **USC** Series	901
Lock unit **UB** Series	927
Brake unit **JSB3** Series	933
Linear guide lock **LMB** Series	939
Linear guide lock **LML** Series	945

Product MAP with brake function

1) Cylinder with position locking and brake

Model	Function	Structure/Operational principle	Driving cylinder	Features
ULKP ULK	With brake (Stop when operating)	Swash plate ● Brake operating principle 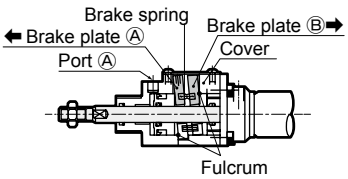 When air is discharged from port A, the brake plates A and B tilt to the arrow direction from the fulcrum. This boosts the brake force by generating cylinder thrust, enabling retention of the piston rod. ● Brake release principle 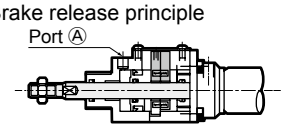 When air is supplied from port A, the brake plates A and B are pushed by the release piston. The brake plates A and B become perpendicular to the piston rod, and the piston rod becomes free to move.	SCP*2 ø16 CMK2 ø20 to ø40	Cylinder with brake. It can be stopped or held stationary during operation. JSG saves more space in the brake area when compared to the conventional JSC3 Series. The ULK also saves more space by reducing the brake height compared to the conventional JSK2 Series. [Applications] (1) When multipoint positioning is required (2) When position locking is required (3) When emergency stop is required (4) When locking a workpiece
JSK2 JSM2 JSG JSC3 · JSC4		Rod clamping ● Brake release principle 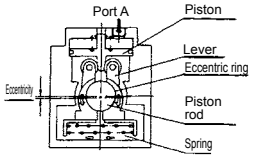 Air supplied from port A pushes the piston under it and opens the lever. The eccentric rings directly connected to the lever rotate and release the piston rod. ● Brake operating principle 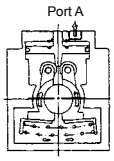 If air is discharged from port A, the eccentric rings rotate with the spring force, generating an eccentric load to brake the piston rod.	CMK2 ø20 to ø40 CMA2 ø20 to ø40 SCG ø40 to ø100 SCA2 ø40 to ø100 SCS2 ø125 to ø180	
USSD UFCD USC	Free position locking (Retain stationary state)	Round slit method 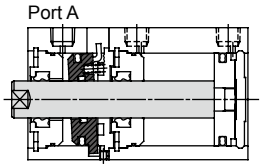 New long life position locking mechanism is used. Applying torque M to the lock metal generates axial force F. This force holds the rod. 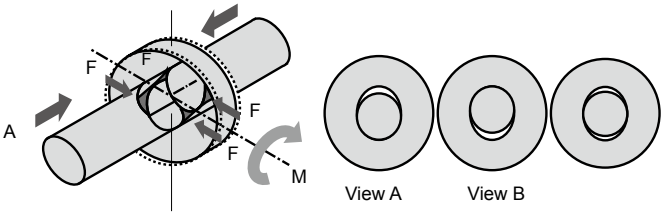 	SSD ø25 to ø100 FCD ø25 to ø63 SCA2 ø40 to ø100	Cylinder with position locking mechanism (for holding cylinder stationary). 2 lock direction 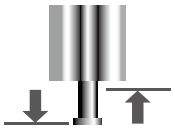 Opposite locking direction is free 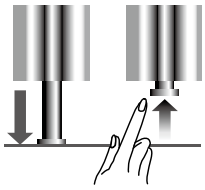 [Application] When position locking is required

2) Braking unit

Model	Function	Size	Features
UB	Stationary state locked	Shaft size ø8, ø16	A lightweight, compact lock unit which retains the shaft thrust direction position. Effective for tracking transport via robot.
JSB3	Brake (Stop when operating)	Rod size ø16 to ø45	A module of the brake mechanism of JSC3 Series. Able to stop the movable rod immediately and lock it firmly, it can be used in safety mechanisms and clamping mechanisms of many kinds of devices.
LMB	Stationary state locked	THK Rail width: 15/20/25	A lock unit installed in a linear guide. When used with a system incorporating a linear guide, this lock unit can be used to lock a workpiece after moving it to a specified position, or to enable emergency stop for safety, etc. LMB is narrower than LML, and LML is lower-profile than LMB.
LML		THK, IKO Rail width: 15/20/25/30/35	

ULKP/ULK

With brake/position locking

Brake cylinder

ø16/ø20/ø25/ø32/ø40

Overview

A reliable brake unit is integrated to the medium bore size (ø16 to ø40) standard cylinder series.

Features

Increased durability

The new swash plate braking method provides surface contact instead of the two-point contact of the conventional swash plate method. This method disperses resistance applied to the rod, increases abrasion resistance, and dramatically improves durability compared to the conventional swash plate method.

Space saving

Brake part height is reduced compared to CKD conventional products. This realizes space saving.

Increased holding force

Use of a new swash plate brake method generates rod holding force equal to 0.8 MPa cylinder thrust.

Easy brake release

To release the brake, screw the bolt in and tilt the brake plate, or simply return the brake plate to the original position.

Simple structure

This simple structure has very few components in the brake section.

Stopping accuracy 1.0 mm

At a cylinder speed of 300 mm/s with no load, the stopping accuracy achieves a high-precision ± 1.0 mm.

CONTENTS

Series variation	672
Product introduction	672
● Double acting/single rod (ULKP)(ø16)	674
● Double acting/single rod (ULK)(ø20 to ø40)	680
● Double acting with valve (ULK-V) (ø20 to ø40)	680
ULK Series common accessory dimensions	694
Examples of applications and usage	695
⚠ Safety precautions	697

The cylinder switches T2YH, T2YV, T3YH, and T3YV are scheduled for end of production at the end of December 2023.

Series variation

Brake cylinder ULKP/ULK Series

Variation	Model No. JIS symbol	Bore size (mm)	Standard stroke (mm)												Min. stroke (mm)
			15	25	30	45	50	60	75	100	150	200	250	300	
Double acting	ULKP 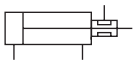	ø16	●		●	●		●							5
Double acting	ULK 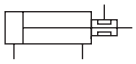	ø20/ø25/ø32/ø40		●			●		●	●	●	●	●	●	5
Double acting/with valve	ULK-V	ø20/ø25/ø32/ø40		●			●		●	●	●	●	●	●	5

Product introduction

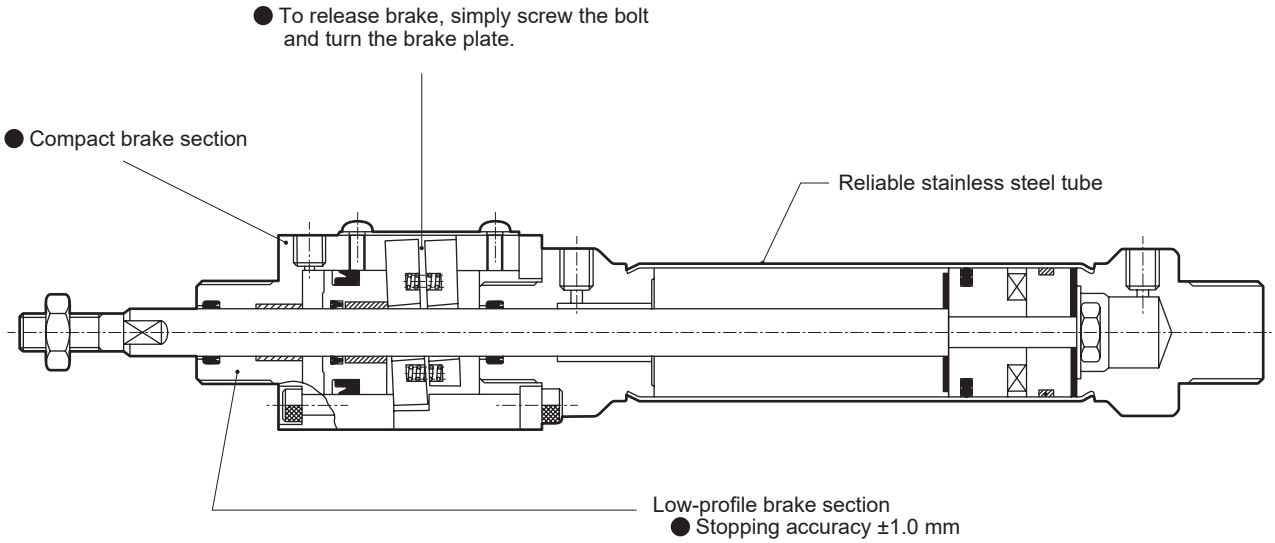

Space-saving model.

● : Standard, ◎ : Option, ○ : Made to order, ■ : Not available

	Max. stroke (mm)	Custom stroke (per mm)	Mounting										Option								Switch	Page
			Basic	Axial foot	Rod side axial foot	Rod side flange	Eye bracket	Clevis bracket	Eye bracket integrated	Eye bracket bush pressfit	Rod side trunnion	Head side trunnion	Bellows (100°C)	Bellows (250°C)	Piston rod material change	Boss cutoff	Rod eye	Rod clevis	Eye bracket	Clevis bracket		
			00	LB	LS	FA	CA	CB	CC	CC1	TA	TB	J	L	M	V	I	Y	B1	B2		
	260	1	●		●	●		●									◎	◎	◎	◎	◎	674
	700	1	●	●		●	●		●	●	●	●	◎	◎	◎	◎	◎	◎		◎	◎	680
	700	1	●	●		●	●		●	●	●	●	◎	◎	◎	◎	◎	◎		◎	◎	680

Brake cylinder double acting/single rod

ULKP Series

● Bore size : ø16

Made-to-order product

JIS symbol ● Double acting cylinder with brake

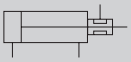

RoHS CAD

Specifications

Item	ULKP/ULKP-L
Actuation	Double acting
Working fluid	Compressed air
Max. working pressure MPa	1.0 (≈150 psi, 10 bar)
Min. working pressure MPa	Cylinder section: 0.15 (≈22 psi, 1.5 bar) Brake section: 0.3 (≈44 psi, 3 bar)
Proof pressure MPa	1.6 (≈230 psi, 16 bar)
Ambient temperature °C	-10 (14°F) to 60 (140°F) (no freezing)
Bore size mm	ø16
Port size	M5
Stroke tolerance mm	$^{+1.0}_{0}$
Working piston speed mm/s	50 to 500
Cushion	Rubber cushion
Lubrication	Not required (use turbine oil class 1 ISO VG32 if necessary for lubrication)
Holding force N	160

Stroke

Model No.	Standard stroke (mm)	Max. stroke (mm)	Min. stroke (mm)
ULKP/ULKP-L	15/30/45/60	260	5

* For types with switch, minimum stroke varies depending on mounting method. Refer to the table below for details.
The custom stroke is available in 1 mm increments.

Min. stroke with switch

	1		2	
Sketch	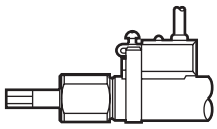 Rod side mounting	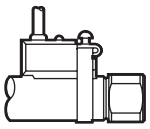 Head side mounting	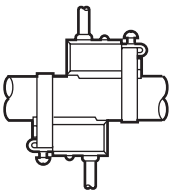 Different surface mounting	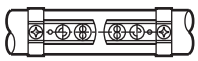 Same surface mounting
Min. stroke	5 mm		10 mm	28 mm

LCM
LCR
LCG
LCW
LCX
STM
STG
STS/STL
STR2
UCA2
ULK*
JSK/M2
JSG
JSC3/JSC4
USSD
UFCD
USC
UB
JSB3
LMB
LML
HCM
HCA
LBC
CAC4
UCAC2
CAC-N
UCAC-N
RCS2
RCC2
PCC
SHC
MCP
GLC
MFC
BBS
RRC
GRC
RV3*
NHS
HRL
LN
Hand
Chuk
MecHnd/Chuk
ShkAbs
FJ
FK
SpdContr
Ending

Switch specifications

Item	Proximity 2-wire		Proximity 3-wire		
	M2V	M2WV (2-color LED)	M3V	M3PV (Made to order)	M3WV
Applications	Programmable controller		For programmable controller, relay, IC circuit, compact solenoid valve		
Output method	-		NPN output	PNP output	NPN output
Power supply voltage	-		4.5 to 28 VDC		10 to 28 VDC
Load voltage	10 to 30 VDC		30 VDC or less		
Load current	5 to 30 mA		100 mA or less	100 mA or less	100 mA or less
Indicator lamp	LED (Lit when ON)	Red/green LED (Lit when ON)	LED (Lit when ON)	Yellow LED (Lit when ON)	Red/green LED (Lit when ON)
Leakage current	1 mA or less		10 μA or less	0.05 mA or less	10 μA or less
Weight g	1 m:22 3 m:57 5 m:93				

Item	Reed 2-wire	
	M0V	M5V
Applications	Programmable controller, relay	For programmable controller, relay IC circuit (without indicator), serial connection
Power supply voltage	-	-
Load voltage/ current	5 to 50 mA with 12/24 VDC, 7 to 20 mA with 110 VAC	50 mA or less with 12/24 VDC, 20 mA or less with 110 VAC
Indicator lamp	LED (Lit when ON)	Without LED
Leakage current	0 mA	
Weight g	1 m:22 3 m:57 5 m:93	

*1 : Refer to Ending Page 1 for other switch specifications.
*2 : Dimensions depend on switch model No. Refer to Ending Page 13 for details.

Product weight

(Unit: g)

Item	Stroke (mm)	ULKP-16
Without switch	15	138
	30	143
	45	148
	60	153
With switch (with 2 switches)	15	186
	30	191
	45	196
	60	201
Switch mounting bracket		2
Switch weight (per switch)		Refer to the weight in the switch specifications.

Theoretical thrust table

(Unit: N)

Bore size (mm)	Operating direction	Working pressure MPa									
		0.15	0.2	0.3	0.4	0.5	0.6	0.7	0.8	0.9	1.0
ø16	Push	30.2	40.2	60.3	80.4	101	121	141	161	181	201
	Pull	27.2	36.3	54.4	72.6	90.7	109	127	145	163	181

LCM
LCR
LCG
LCW
LCX
STM
STG
STS/STL
STR2
UCA2
ULK*
JSK/M2
JSG
JSC3/JSC4
USSD
UFCD
USC
UB
JSB3
LMB
LML
HCM
HCA
LBC
CAC4
UCAC2
CAC-N
UCAC-N
RCS2
RCC2
PCC
SHC
MCP
GLC
MFC
BBS
RRC
GRC
RV3*
NHS
HRL
LN
Hand
Chuk
MecHnd/Chuk
ShkAbs
FJ
FK
SpdContr
Ending

How to order

Without switch (without magnet for switch)

ULKP — 00 - 16 - 60 - 0 — Y

With switch (built-in magnet for switch)

ULKP-L - 00 - 16 - 60 - 0 - M2V - R - Y

Ⓐ Model
Ⓑ Mounting
Ⓒ Bore size
Ⓓ Stroke
Ⓔ Head side port direction
Ⓕ Switch model No.
Ⓖ Switch quantity *3
Ⓗ Accessory

My end of production ended May 2022.

Code	Description
Ⓐ Model	
ULKP	Double acting
ULKP-L	Double acting with switch
Ⓑ Mounting	
00	Basic
LS	Axial foot (single) (rod side)
FA	Rod side flange
CB	Clevis bracket
Ⓒ Bore size	
16	ø16

Ⓓ Stroke

Bore size	Stroke *1	Custom stroke
ø16	**5 to 260**	In 1 mm increments

Ⓔ Head side port direction	
Blank	Vertical
0	Axial direction (*2)

Ⓕ Switch model No.

Radial lead wire	Contact	Voltage AC	Voltage DC	Indicator	Lead wire
M0V*	Reed	●	●	1-color LED	2-wire
M5V*		●	●	Without LED	
M2V*	Proximity		●	1-color LED	
M2WV*			●	2-color LED	
M3V*			●	1-color LED	3-wire
M3WV*			●	2-color LED	
M3PV*			●	1-color LED (made to order)	

*** Lead wire length**	
Blank	1 m (standard)
3	3 m (option)
5	5 m (option)
Ⓖ Switch quantity	
R	1 on rod side
H	1 on head side
D	2
T	3
Ⓗ Accessory	
I	Rod eye
Y	Rod clevis (pin, washer, split pin attached)
B1	Eye bracket
B2	Clevis bracket (pin, snap ring attached)

⚠ Precautions for model No. selection

*1 : Refer to page 674 for the min. stroke with switch.
*2 : The CB mounting is not available for port direction/axial direction.
*3 : "I" and "Y" cannot be selected together.

[Example of model No.]

ULKP-L-00-16-60-0-M2V-R-Y

Ⓐ Model : Brake cylinder with switch double acting
Ⓑ Mounting : Basic
Ⓒ Bore size : ø16
Ⓓ Stroke : 60 mm
Ⓔ Head side port direction : Axial direction
Ⓕ Switch model No. : Proximity switch, lead wire length: 1 m
Ⓖ Switch quantity : 1 on rod side
Ⓗ Accessory : Rod clevis

How to order switch

● Switch body + mounting bracket set

ULKP – M2V – 20

Bore size
(Item Ⓒ on page 676)

Switch model No.
(Item Ⓕ on page 676)

● Switch body only

SW - M2V

Switch model No.
(Item Ⓕ on page 676)

● Mounting bracket set

ULKP - M - 16

Bore size
(Item Ⓒ on page 676)

Mounting bracket

How to order mounting bracket

Bore size (mm) / Mounting bracket	ø16
Foot (LS)	P2-LS-16
Flange (FA)	P2-FA-16

*1 : The foot mounting bracket is provided as 1 pc./set.

Internal structure and parts list

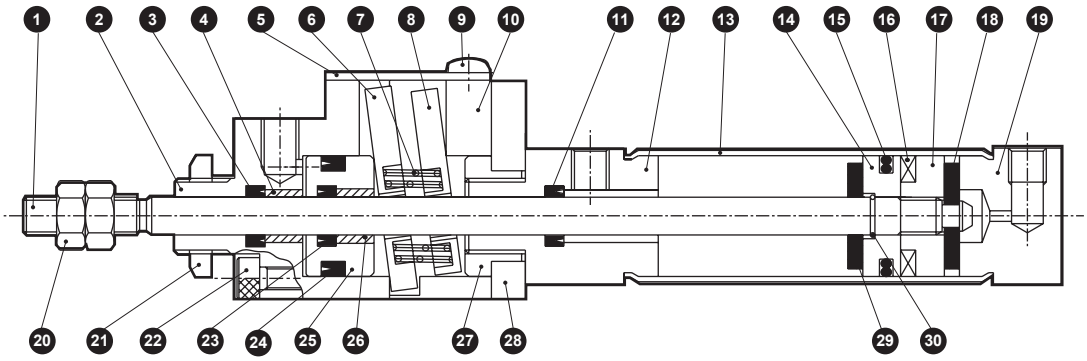

Cannot be disassembled

* This product cannot be disassembled.

No.	Part name	Material	Remarks
1	Piston rod	Stainless steel	
2	Body A	Aluminum alloy	Alumite
3	Brake rod packing	Nitrile rubber	
4	Bearing	Acetal resin	
5	Cover	Aluminum alloy	Alumite
6	Brake plate A	Copper alloy	
7	Brake spring	Piano wire	
8	Brake plate B	Copper alloy	
9	Cross-recessed pan head machine screw	Steel	Zinc chromate
10	Body B	Aluminum alloy	Alumite
11	Rod packing	Nitrile rubber	
12	Rod cover	Aluminum alloy	Hard alumite
13	Cylinder tube	Stainless steel	
14	Piston	Aluminum alloy	
15	Piston packing	Nitrile rubber	

No.	Part name	Material	Remarks
16	Magnet	Plastic (With switch only)	
17	Spacer	Aluminum alloy	
18	Cushion rubber H	Urethane rubber	
19	Head cover	Aluminum alloy	Hard alumite
20	Rod nut	Steel	Nickeling
21	Hexagon nut	Steel	Nickeling
22	Hexagon socket head cap screw	Steel	
23	Release rod packing	Nitrile rubber	
24	Release piston packing	Nitrile rubber	
25	Release piston	Aluminum alloy	Alumite
26	Release piston bearing	Acetal resin	
27	Fixing nut	Steel	Zinc chromate
28	Brake flange	Steel	Zinc chromate
29	Cushion rubber R	Urethane rubber	
30	Retaining ring	Stainless steel	

Configurations table

● Brake unit

ULKP – 16 – BRAKE-UNIT

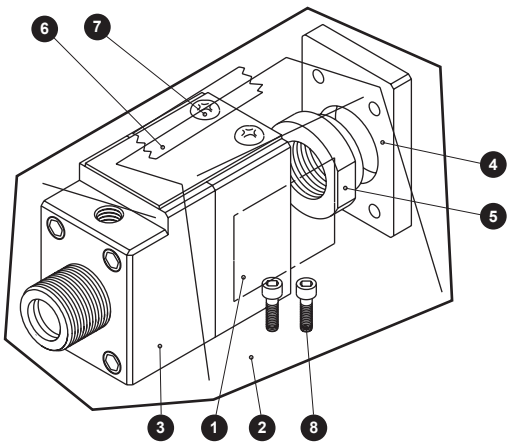

No.	Part name	Quantity
1	Label	1
2	Plastic sheets or plastic bag	1
3	Brake assembly	1
4	Brake flange	1
5	Fixing nut	1
6	Cover	1
7	Cross-recessed pan head machine screw	2
8	Hexagon socket head cap screw	2

LCM
LCR
LCG
LCW
LCX
STM
STG
STS/STL
STR2
UCA2
ULK*
JSK/M2
JSG
JSC3/JSC4
USSD
UFCD
USC
UB
JSB3
LMB
LML
HCM
HCA
LBC
CAC4
UCAC2
CAC-N
UCAC-N
RCS2
RCC2
PCC
SHC
MCP
GLC
MFC
BBS
RRC
GRC
RV3*
NHS
HRL
LN
Hand
Chuk
MecHnd/Chuk
ShkAbs
FJ
FK
SpdContr
Ending

Dimensions

● ULKP-*-00-16

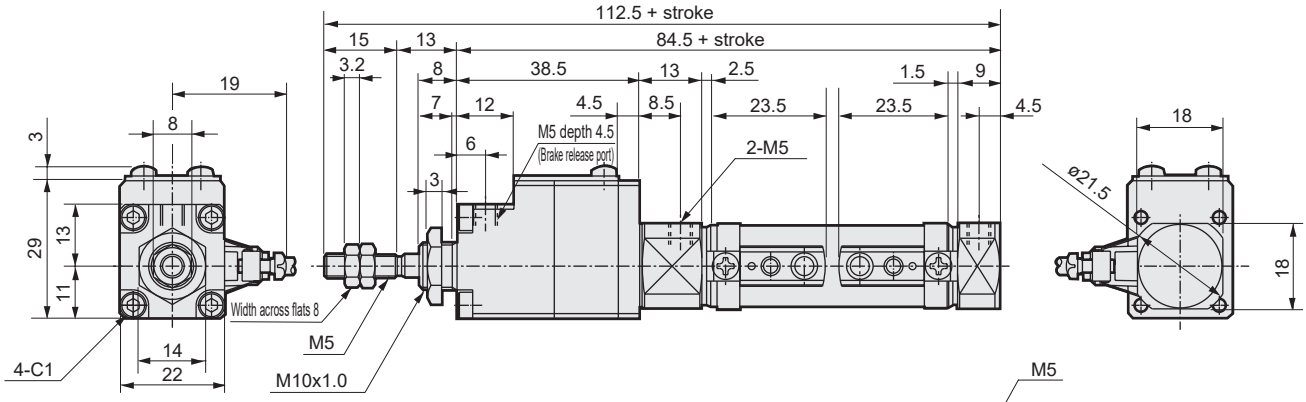

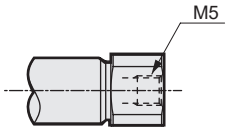

Port direction axial

Note : For other mounting dimensions, refer to the pencil shaped cylinder in "Pneumatic Cylinders I, No.CB-029SA".

Accessory dimensions

● Rod eye (I)
Model No. : P2-I-16

Material : Steel
Zinc chromate treatment
Weight : 21 g

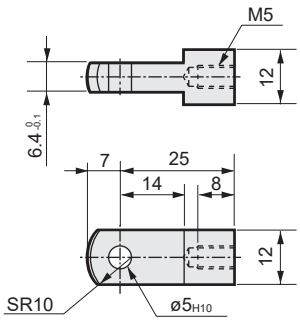

● Rod clevis (Y)
Model No. : P2-Y-16

Material : Steel
Zinc chromate treatment
Weight : 20 g

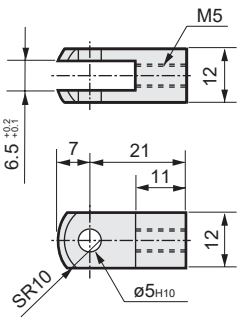

● Rod eye pin
Model No.: P2-P-16

Material : Stainless steel
Weight : 3 g

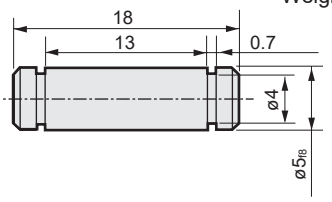

● Eye bracket (B1)
Model No.: P2-B1-16

Material : Steel
Zinc chromate treatment
Weight : 48 g

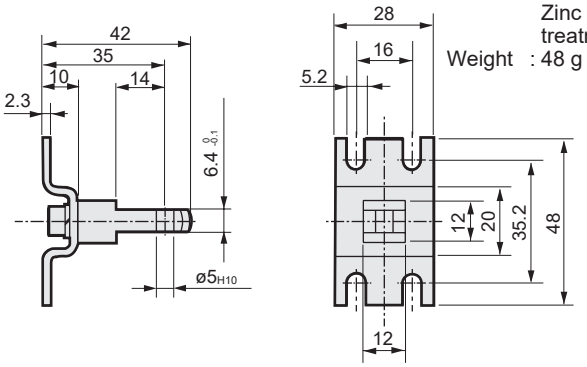

● Clevis bracket (B2)
Model No.: P2-B2-16

Material : Steel
Zinc chromate treatment
Weight : 44 g

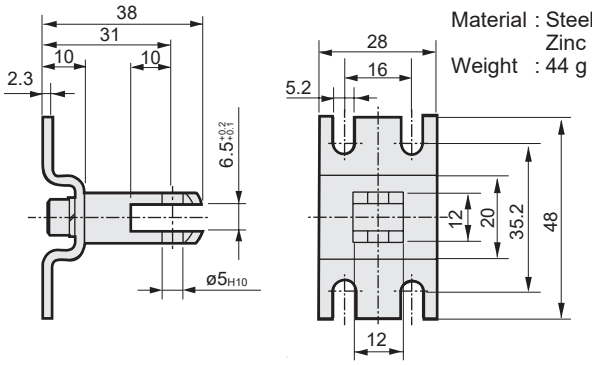

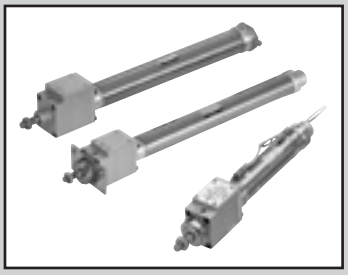

Brake cylinder Double acting, double acting/with valve for brake

ULK/ULK-V Series

● Bore size: ø20/ø25/ø32/ø40

JIS symbol

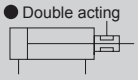

RoHS CAD

Specifications

Item		ULK				ULK-V			
Bore size mm		ø20	ø25	ø32	ø40	ø20	ø25	ø32	ø40
Actuation		Double acting				Double acting/with valve for brake			
Working fluid		Compressed air							
Max. working pressure MPa		1.0				Cylinder section: 1.0 Brake section: 0.6			
Min. working pressure	Brake section MPa	0.3							
	Cylinder section MPa	0.15							
Proof pressure MPa		1.6							
Ambient temperature°C		-10 to 60 (no freezing)				-10 to 50 (no freezing)			
Port size	Brake section	Rc1/8							
	Cylinder	Rc1/8							
Stroke tolerance mm		$^{+2.0}_{0}$ (up to 200) $^{+2.4}_{0}$ (201 up)							
Working piston speed mm/s		50 to 500							
Cushion		Rubber cushion							
Lubrication		Not required (use turbine oil class 1 ISO VG32 if lubrication is necessary)							
Holding force N		251	393	643	1005	251	393	643	1005
Allowable absorbed energy J		0.166	0.308	0.424	0.639	0.166	0.308	0.424	0.639

Note: For details of valves (P5136 Series), refer to "Pneumatic Valves" CB-023SA.

Electrical specification for brake valve

Item	ULK-V-Bore size-VALVE-KIT-Voltage		
Rated voltage (V)	100 AC (50/60Hz)	200 AC (50/60Hz)	24 DC
Starting current (A)	0.056/0.044	0.034/0.026	0.075
Holding current (A)	0.028/0.022	0.017/0.013	
Power consumption (W)	1.8/1.4	2.1/1.6	1.8
Voltage fluctuation range	±10%		
Insulation class	Class B molded coil		

*1: 100/200 VAC coil is available for 110/220 VAC (60 Hz).

Stroke

Bore size (mm)	Standard stroke (mm)	Max. stroke (mm)	Min. stroke (mm)
ø20	25/50 /75/100/150 200/250/300	700	5
ø25			
ø32			
ø40			

*1: The custom stroke is available in 1 mm increments.
*2: The min. stroke varies depending on switch mounting method. Refer to the following table.

Min. stroke with switch

Switch quantity	1					2					3				
	Proximity			Reed		Proximity			Reed		Proximity			Reed	
Bore size (mm)	T2,T3	T1, T*Y	T*W	T0,T5	T8	T2,T3	T1,T*Y	T*W	T0,T5	T8	T2,T3	T1, T*Y	T*W	T0,T5	T8
ø20	10					25	35	30	25	35	50	55	55	50	55
ø25	10					25	35	30	25	35	50	55	55	50	55
ø32	10					25	35	30	25	35	50	55	55	50	55
ø40	10					25	35	30	25	35	50	55	55	50	55

*1: Up to 3 switches can be mounted.

LCM
LCR
LCG
LCW
LCX
STM
STG
STS/STL
STR2
UCA2
ULK*
JSK/M2
JSG
JSC3/JSC4
USSD
UFCD
USC
UB
JSB3
LMB
LML
HCM
HCA
LBC
CAC4
UCAC2
CAC-N
UCAC-N
RCS2
RCC2
PCC
SHC
MCP
GLC
MFC
BBS
RRC
GRC
RV3*
NHS
HRL
LN
Hand
Chuk
MecHnd/Chuk
ShkAbs
FJ
FK
SpdContr
Ending

Switch specifications

● 1-color/2-color LED

Item	Proximity 2-wire	Proximity 2-wire			Proximity 3-wire				Reed 2-wire						
	T1H/T1V	T2H/T2V/ T2JH/T2JV	T2YH/ T2YV	T2WH/ T2WV	T3H/ T3V	T3PH/ T3PV	T3YH/ T3YV	T3WH/ T3WV	T0H/T0V		T5H/T5V		T8H/T8V		
Applications	Programmable controller For relay, compact solenoid valve	Dedicated for programmable controller			For programmable controller, relay				For programmable controller, relay		Programmable controller, relayIC circuit (no indicator lamp), for serial connection		For programmable controller, relay		
Output method	-				NPN output	PNP output	NPN output	NPN output	-						
Pwr. supp. V.	-				10 to 28 VDC				-						
Load voltage	85 to 265 VAC	10 to 30 VDC		24 VDC ±10%	30 VDC or less				12/24 VDC	100/110 VAC	5/12/24 VDC	100/110 VAC	12/24 VDC	110 VAC	220 VAC
Load current	5 to 100mA	5 to 20 mA (*3)			100 mA or less		50 mA or less		5 to 50mA	7 to 20mA	50 mA or less	20 mA or less	5 to 50mA	7 to 20mA	7 to 10mA
Indicator lamp	LED (Lit when ON)	LED (Lit when ON)	Red/green LED (Lit when ON)	Red/green LED (Lit when ON)	LED (Lit when ON)	Yellow LED (Lit when ON)	Red/green LED (Lit when ON)	Red/green LED (Lit when ON)	LED (Lit when ON)		No indicator lamp		LED (Lit when ON)		
Leakage current	1 mA or less with 100 VAC, 2 mA or less with 200 VAC	1 mA or less			10 μA or less				0mA						
Weight g	1 m: 33 3 m: 87 5 m: 142	1 m: 18 3 m: 49 5 m: 80	1 m: 33 3 m: 87 5 m: 142	1 m: 18 3 m: 49 5 m: 80	1 m: 18 3 m: 49 5 m: 80		1 m: 33 3 m: 87 5 m: 142	1 m: 18 3 m: 49 5 m: 80	1 m: 18 3 m: 49 5 m: 80				1 m: 33 3 m: 87 5 m: 142		

*1 : Refer to Ending Page 1 for detailed switch specifications and dimensions.
*2 : Switches other than the above models, such as switches with connectors, are also available. Refer to Ending Page 1.
*3 : The max. load current is 20 mA at 25°C. The current is lower than 20 mA if the operating ambient temperature around the switch is higher than 25˚C. (5 to 10 mA at 60°C)

Cylinder weight

● ULK

(Unit: kg)

Item/mounting / Bore size (mm)	STROKE = 0Product weight when mm						Switch weight	SwitchH Rail + band weight	Additional weight per S = 10 mm
	Basic (00)	Axial foot (LB)	Flange (FA)	Clevis (CA)	Clevis (CC)	Trunnion (TA/TB)			
ø20	0.47	0.62	0.53	0.62	0.48	0.52	Refer to the weightin theUse this as a reference.	0.005	0.01
ø25	0.84	1.10	0.99	1.08	0.84	0.94		0.005	0.01
ø32	0.88	1.14	1.03	1.12	0.88	0.98		0.009	0.02
ø40	1.47	1.73	1.62	1.71	1.49	1.63		0.009	0.02

● ULK-V (with valve for brake)

(Unit: kg)

Item/mounting / Bore size (mm)	STROKE = 0Product weight when mm						Switch weight	SwitchH Rail + band weight	Additional weight per S = 10 mm
	Basic (00)	Axial foot (LB)	Flange (FA)	Clevis (CA)	Clevis (CC)	Trunnion (TA/TB)			
ø20	0.53	0.68	0.59	0.68	0.54	0.58	Refer to the weightin theUse this as a reference.	0.005	0.01
ø25	0.90	1.16	1.05	1.14	0.90	1.00		0.005	0.01
ø32	0.94	1.20	1.09	1.18	0.94	1.04		0.009	0.02
ø40	1.53	1.79	1.68	1.77	1.55	1.69		0.009	0.02

Theoretical thrust table

(Unit: N)

Bore size (mm)	Operating direction	Working pressure MPa									
		0.15	0.2	0.3	0.4	0.5	0.6	0.7	0.8	0.9	1.0
ø20	Push	47.1	62.8	94.2	1.26×10^2	1.57×10^2	1.88×10^2	2.20×10^2	2.51×10^2	2.83×10^2	3.14×10^2
	Pull	35.3	47.1	70.7	94.2	1.18×10^2	1.41×10^2	1.65×10^2	1.88×10^2	2.12×10^2	2.36×10^2
ø25	Push	73.6	98.2	1.47×10^2	1.96×10^2	2.45×10^2	2.95×10^2	3.44×10^2	3.93×10^2	4.42×10^2	4.91×10^2
	Pull	56.7	75.6	1.13×10^2	1.51×10^2	1.89×10^2	2.27×10^2	2.64×10^2	3.02×10^2	3.40×10^2	3.78×10^2
ø32	Push	1.21×10^2	1.61×10^2	2.41×10^2	3.22×10^2	4.02×10^2	4.83×10^2	5.63×10^2	6.43×10^2	7.24×10^2	8.04×10^2
	Pull	1.04×10^2	1.38×10^2	2.07×10^2	2.76×10^2	3.46×10^2	4.15×10^2	4.84×10^2	5.53×10^2	6.22×10^2	6.91×10^2
ø40	Push	1.88×10^2	2.51×10^2	3.77×10^2	5.03×10^2	6.28×10^2	7.54×10^2	8.80×10^2	1.01×10^3	1.13×10^3	1.26×10^3
	Pull	1.65×10^2	2.21×10^2	3.31×10^2	4.41×10^2	5.51×10^2	6.62×10^2	7.72×10^2	8.82×10^2	9.92×10^2	1.10×10^3

LCM
LCR
LCG
LCW
LCX
STM
STG
STS/STL
STR2
UCA2
ULK*
JSK/M2
JSG
JSC3/JSC4
USSD
UFCD
USC
UB
JSB3
LMB
LML
HCM
HCA
LBC
CAC4
UCAC2
CAC-N
UCAC-N
RCS2
RCC2
PCC
SHC
MCP
GLC
MFC
BBS
RRC
GRC
RV3*
NHS
HRL
LN
Hand
Chuk
MecHnd/Chuk
ShkAbs
FJ
FK
SpdContr
Ending

How to order

● Without valve

Without switch (built-in magnet for switch)

ULK - 00 - 20 - 100 ——— V I

With switch (built-in magnet for switch)

ULK - 00 - 20 - 100 —— T0H - R - V I

● With valve for brake

Without switch (built-in magnet for switch)

ULK-V - 00 - 20 - 100 - 1 ——— V I

With switch (built-in magnet for switch)

ULK-V - 00 - 20 - 100 - 1 - T0H - R - V I

Ⓐ Model No.
Ⓑ Mounting
Ⓒ Bore size
Ⓓ Stroke
Ⓔ Valve voltage
Ⓕ Switch model No.
Ⓖ Switch quantity *5
Ⓗ Option *3
Ⓘ Accessory *4

Code	Description	Ⓐ Model No. Double acting	Ⓐ Model No. Double acting/ with valve -V
Ⓑ Mounting			
00	Basic	●	●
LB	Axial foot	●	●
FA	Rod side flange	●	●
CA	Eye bracket	●	●
CC	Eye bracket integrated	●	●
CC1	Eye bracket bush pressfit	●	●
TA	Rod side trunnion	●	●
TB	Head side trunnion	●	●
Ⓒ Bore size (mm)			
20	ø20	●	●
25	ø25	●	●
32	ø32	●	●
40	ø40	●	●
Ⓔ Valve voltage			
1	100 VAC (50/60 Hz)		●
2	200 VAC (50/60 Hz)		●
3	24 VDC		●

Ⓓ Stroke (mm)

Bore size	Stroke *1	Custom stroke
ø20	5 to 700	In 1 mm increments
ø25	5 to 700	
ø32	5 to 700	
ø40	5 to 700	

Ⓕ Switch model No.

Straight lead wire	L-shaped lead wire	Contact	Voltage AC	Voltage DC	Indicator	Lead wire
T0H*	T0V*	Reed	●	●	1-color LED	2-wire
T5H*	T5V*	Reed	●	●	No indicator lamp	2-wire
T8H*	T8V*	Reed	●	●	1-color LED	2-wire
T1H*	T1V*	Proximity	●		1-color LED	2-wire
T2H*	T2V*	Proximity		●	1-color LED	2-wire
T3H*	T3V*	Proximity		●	1-color LED	3-wire
T2WH*	T2WV*	Proximity		●	2-color LED	2-wire
T2YH*	T2YV*	Proximity		●	2-color LED	2-wire
T3WH*	T3WV*	Proximity		●	2-color LED	3-wire
T3YH*	T3YV*	Proximity		●	2-color LED	3-wire
T3PH*	T3PV*	Proximity		●	1-color LED	3-wire
T2JH*	T2JV*	Proximity		●	1-color LED off-delay	2-wire

* Lead wire length			
Blank	1 m (standard)	●	●
3	3 m (option)	●	●
5	5 m (option)	●	●
Ⓖ Switch quantity			
R	1 on rod side	●	●
H	1 on head side	●	●
D	2	●	●
T	3	●	●

Ⓗ Option

		Max. ambient temperature	instantaneous max. temp		
J	Bellows	100°C	200°C	●	●
L	Bellows	250°C	400°C	●	●
M	Piston rod material (stainless steel)			●	●
V	Boss cutoff			●	●

Ⓘ Accessory			
I	Rod eye	●	●
Y	Rod clevis (pin, washer, split pin attached)	●	●
B2	Clevis bracket (pin, snap ring attached)	●	●

⚠ Precautions for model No. selection

*1 : Refer to page 680 for the min. stroke with switch.
*2 : The stroke will be 25 mm and over with bellows "J". Contact CKD when stroke is shorter than 25 mm.
*3 : The instantaneous max. temperature is the temperature when sparks, cutting chips, etc., instantaneously contact the bellows.
*4 : "I" and "Y" cannot be selected together.
*5 : Up to three switches can be installed. If four or more switches are required, switch mounting brackets for the extra switches must be prepared separately.
*6 : Refer to Ending Page 85 for custom specifications of rod end form.

[Example of model No.]

ULK-V-LB-20-100-1-T0H-R-JI

Model:Brake cylinder

Ⓐ Model No.	: Double acting/With valve for brake
Ⓑ Mounting	: Axial foot
Ⓒ Bore size	: ø20 mm
Ⓓ Stroke	: 100 mm
Ⓔ Valve voltage	: 100 VAC (50/60 Hz)
Ⓕ Switch model No.	: Reed T0H switch
Ⓖ Switch quantity	: 1 on rod side
Ⓗ Option	: Bellows material, max. ambient temperature 100°C, instantaneous max. temperature 200°C
Ⓘ Accessory	: Rod eye

How to order switch

● Switch body + mounting bracket set

ULK – **T0H** – **20**

- 20 → Bore size (Item Ⓒ on page 682)
- T0H → Switch model No. (Item Ⓕ on page 682)

● Switch body only

SW - **T0H**

- T0H → Switch model No. (Item Ⓕ on page 682)

● Mounting bracket set

ULK - **T** - **20**

- 20 → Bore size (Item Ⓒ on page 682)
- T → Mounting bracket

How to order brake valve only

ULK-V – Ⓒ Bore size – **VALVE-KIT** – Ⓔ Valve voltage

How to order brake unit only

ULK – Ⓒ Bore size – **BRAKE-UNIT**

How to order mounting bracket

Bore size (mm) / Mounting bracket	ø20	ø25	ø32	ø40
Basic (00) *3	M1-00-20	M1-00-30	M1-00-30	M1-00-30
Axial foot (LB)	M1-LB-20	M1-LB-30	M1-LB-30	M1-LB-30
Flange (FA)	M1-FA-20	M1-FA-30	M1-FA-30	M1-FA-30
Eye bracket (CA)	M1-CA-20	M1-CA-30	M1-CA-30	M1-CA-30
Trunnion (TA/TB)	M1-TA-20	M1-TA-30	M1-TA-30	M1-TA-40

*1: As for mounting brackets, the axial foot and flange include mounting nuts and toothed washers, and the trunnion includes mounting nuts.
2: For axial foot, 2 sets of the above "M1-LB-" are required.
*3: Mounting nut, toothed washer only. Although 1 set is attached with the basic of the product (00), use this when needed.

Specifications for rechargeable battery

(Catalog No. CC-1226A)

ULK - … - P4*

● Design compatible with rechargeable battery manufacturing process.

* Contact CKD for details.

LCM
LCR
LCG
LCW
LCX
STM
STG
STS/STL
STR2
UCA2
ULK*
JSK/M2
JSG
JSC3/JSC4
USSD
UFCD
USC
UB
JSB3
LMB
LML
HCM
HCA
LBC
CAC4
UCAC2
CAC-N
UCAC-N
RCS2
RCC2
PCC
SHC
MCP
GLC
MFC
BBS
RRC
GRC
RV3*
NHS
HRL
LN
Hand
Chuk
MecHnd/Chuk
ShkAbs
FJ
FK
SpdContr
Ending

LCM
LCR
LCG
LCW
LCX
STM
STG
STS/STL
STR2
UCA2
ULK*
JSK/M2
JSG
JSC3/JSC4
USSD
UFCD
USC
UB
JSB3
LMB
LML
HCM
HCA
LBC
CAC4
UCAC2
CAC-N
UCAC-N
RCS2
RCC2
PCC
SHC
MCP
GLC
MFC
BBS
RRC
GRC
RV3*
NHS
HRL
LN
Hand
Chuk
MecHnd/Chuk
ShkAbs
FJ
FK
SpdContr
Ending

Internal structure and parts list

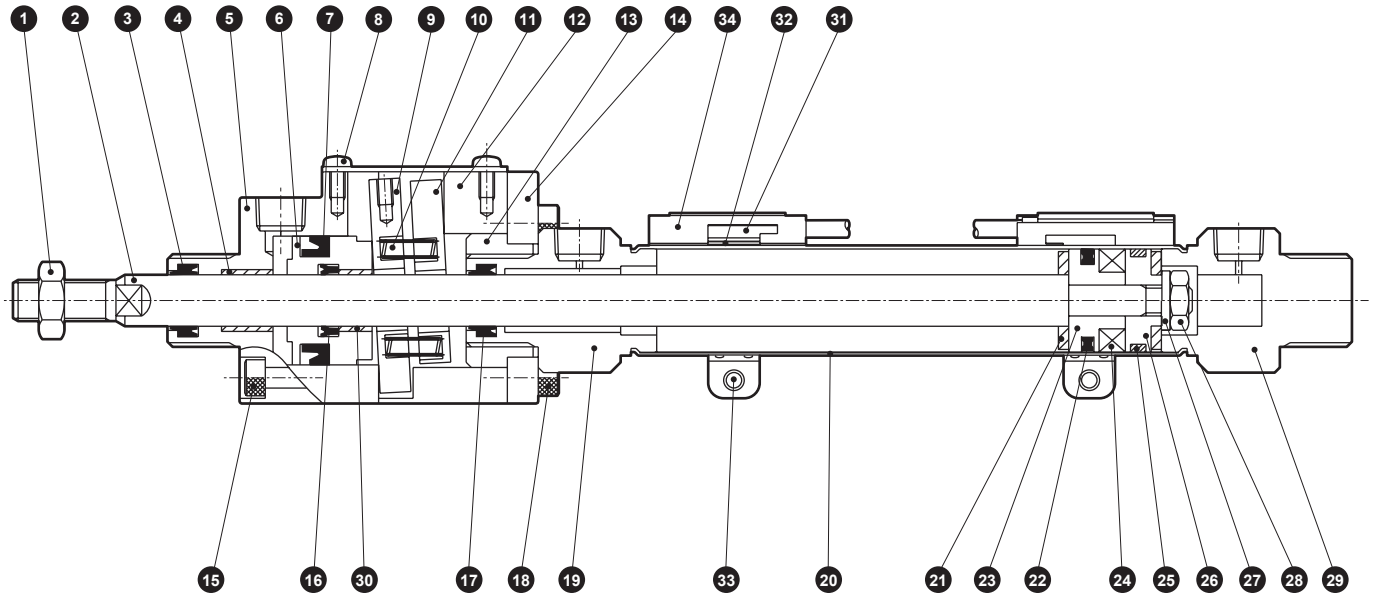

Cannot be disassembled

* This product cannot be disassembled.

No.	Part name	Material	Remarks
1	Rod nut	Steel	Zinc chromate
2	Piston rod	ø20/ø25: stainless steel ø32/ø40: steel	Industrial chrome plating
3	Brake rod packing	Nitrile rubber	
4	Bearing	Acetal resin	
5	Body A	Aluminum alloy	Alumite
6	Release piston	Aluminum alloy	Alumite
7	Release piston packing	Nitrile rubber	
8	Pan head machine screw	Steel	
9	Brake plate A	Special steel	Zinc chromate
10	Brake spring	Piano wire	Black finish
11	Brake plate B	Special steel	Zinc chromate
12	Body B	Aluminum alloy	Alumite
13	Fixing nut	Steel	Zinc chromate
14	Brake flange	Steel	Zinc chromate
15	Hexagon socket head cap screw	Steel	Black finish
16	Release rod packing	Nitrile rubber	
17	Rod packing	Nitrile rubber	

No.	Part name	Material	Remarks
18	Hexagon socket head cap screw	Steel	Black finish
19	Rod cover	Aluminum alloy	
20	Cylinder tube	Stainless steel	
21	Cushion rubber	Urethane rubber	
22	Piston packing	Nitrile rubber	
23	Piston A	Aluminum alloy	
24	Magnet	Plastic	
25	Wear ring	Acetal resin	
26	Piston B	Aluminum alloy	
27	Spacer	Steel	
28	Hexagon nut	Steel	Zinc chromate
29	Head cover	Aluminum alloy	
30	Release rod metal	Acetal resin	
31	Switch body		
32	Band	Stainless steel	
33	Pan head machine screw	Stainless steel	
34	Switch rail	Stainless steel	

Dimensions

● Basic (00)

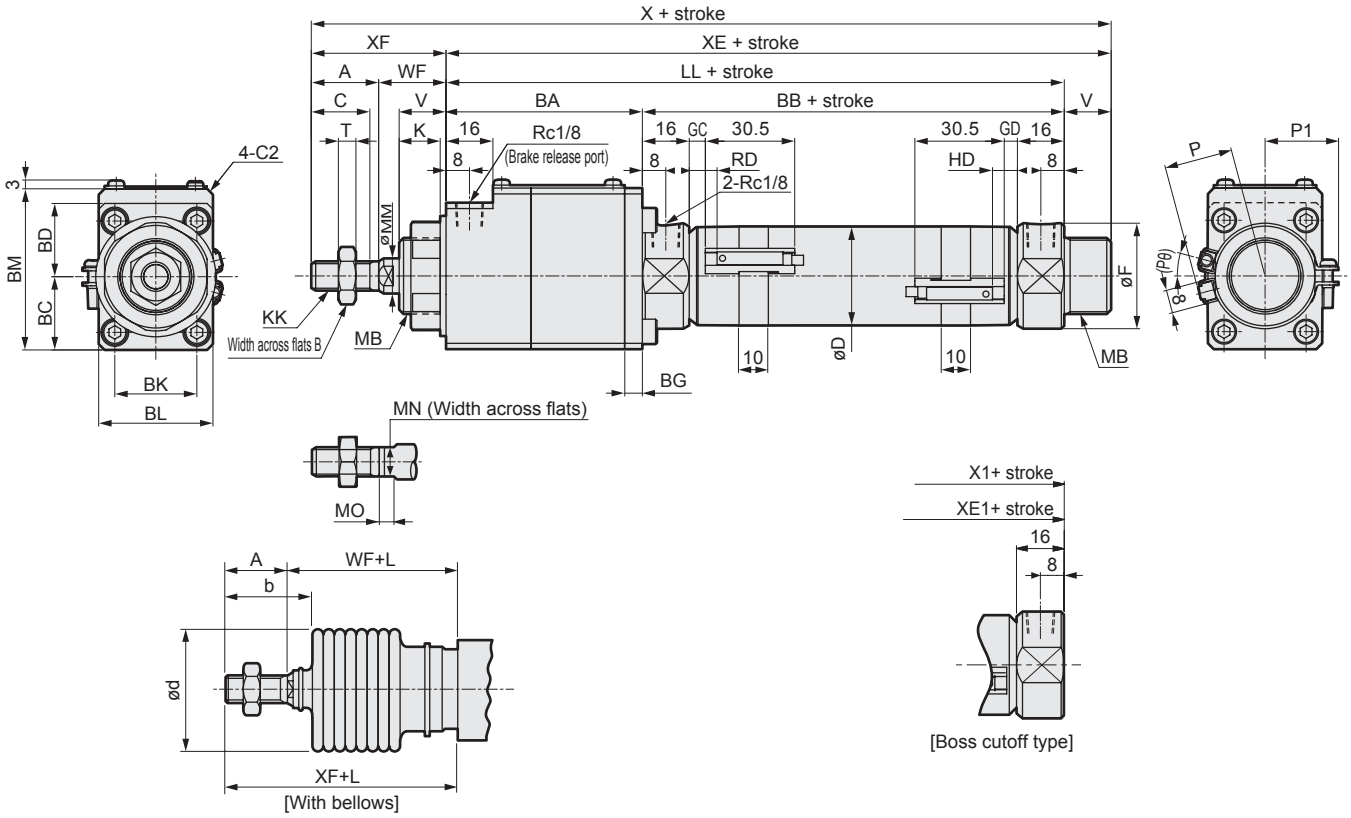

RD: Rod side max. sensitivity position
HD: Head side max. sensitivity position

1 : Refer to page 693 for HD, RD and protruding dimensions of T1, T8* and 2-color LED switches.
*2 : For the L dimension, round up below the decimal point.
*3 : For the dimensions of the accessories, refer to page 694.

Code	Basic (00) basic dimensions													
Bore size (mm)	A	B	BA	BB	BC	BD	BG	BK	BL	BM	C	D	F	K
ø20	20	13	58	66	20	20	6	20	29	45	18	21.4	28	12
ø25	23	17	67	69	25	25	6	28	39	55	20	26.4	32	14
ø32	23	17	67	69	25	25	6	28	39	55	20	33.6	36	14
ø40	25	19	74	73	29	30	9	39	50	69	22	41.6	45	14

Code														With switch (T0, T5, T2, T3)			
Bore size (mm)	KK	LL	MB	MM	MN	MO	T	V	WF	X	XE	XF		GC	GD	RD	HD
ø20	M8x1.0	124	M18x1.5	10	8	5	5	14	24	182	138	44		4.0	3.0	8.0	7.0
ø25	M10x1.25	136	M26x1.5	12	10	5	6	16	23	198	152	46		5.5	4.5	9.5	8.5
ø32	M10x1.25	136	M26x1.5	12	10	5	6	16	23	198	152	46		5.5	4.5	9.5	8.5
ø40	M12x1.5	147	M26x1.5	14	12	6	7	16	23	211	163	48		7.5	6.5	11.5	10.5

Code	With switch (T2W, T3W)							With bellows			Boss cutoff type	
Bore size (mm)	GC	GD	RD	HD	P	P1	(Pθ)°	b	d	L	X1	XE1
ø20	6.0	5.0	10.0	9.0	17.3	19.5	22	30	30	(Stroke/3) + 6	168	124
ø25	7.5	6.5	11.5	10.5	19.8	22.0	18	32	46	(Stroke/3.25) + 7	182	136
ø32	7.5	6.5	11.5	10.5	24.3	25.5	15	32	46	(Stroke/3.25) + 7	182	136
ø40	9.5	8.5	13.5	12.5	28.3	29.5	12	34	46	(Stroke/3.25) + 7	195	147

LCM
LCR
LCG
LCW
LCX
STM
STG
STS/STL
STR2
UCA2
ULK*
JSK/M2
JSG
JSC3/JSC4
USSD
UFCD
USC
UB
JSB3
LMB
LML
HCM
HCA
LBC
CAC4
UCAC2
CAC-N
UCAC-N
RCS2
RCC2
PCC
SHC
MCP
GLC
MFC
BBS
RRC
GRC
RV3*
NHS
HRL
LN
Hand
Chuk
MecHnd/Chuk
ShkAbs
FJ
FK
SpdContr
Ending

Dimensions

● Axial foot (LB)

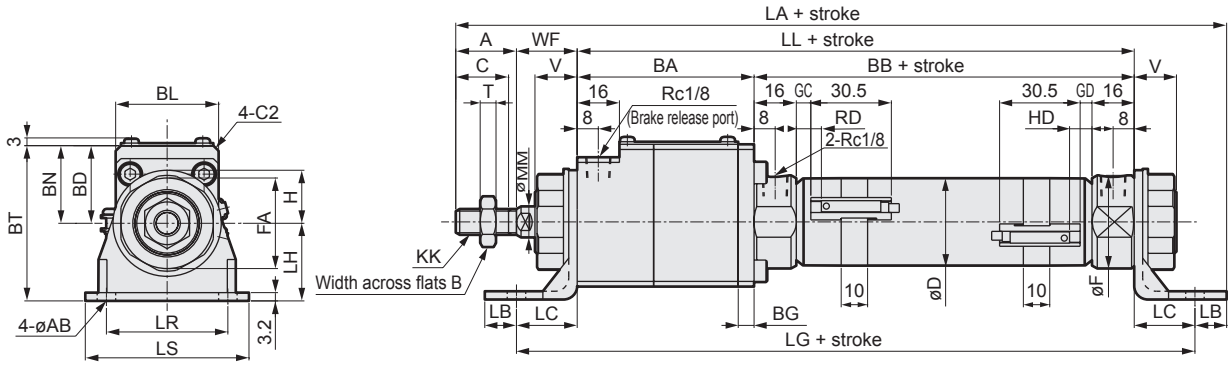

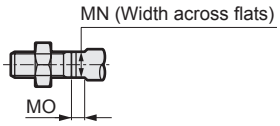

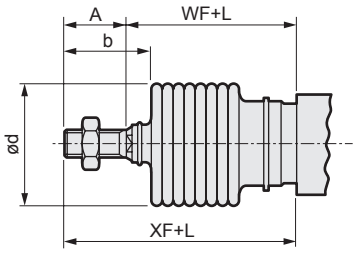

[With bellows]

1 : Refer to page 693 for HD, RD and protruding dimensions of T1, T8* and 2-color LED switches.
*2 : For the L dimension, round up below the decimal point.
*3 : For the dimensions of the accessories, refer to page 694.

Code	Axial foot (LB) basic dimensions															
Bore size	A	AB	B	BA	BB	BD	BG	BL	BN	BT	C	D	F	FA	H	KK
ø20	20	6	13	58	66	20	6	29	25	50	18	21.4	28	26	15	M8x1.0
ø25	23	7	17	67	69	25	6	39	30	60	20	26.4	32	35	20	M10x1.25
ø32	23	7	17	67	69	25	6	39	30	60	20	33.6	36	35	20	M10x1.25
ø40	25	7	19	74	73	30	9	50	40	70	22	41.6	45	35	20	M12x1.5

Code								Mounting dimensions							With switch (T0, T5, T2, T3)			
Bore size	LL	MM	MN	MO	T	V	WF	LA	LB	LC	LG	LH	LR	LS	GC	GD	RD	HD
ø20	124	10	8	5	5	14	24	196	10	18	160	25	30	44	4.0	3.0	8.0	7.0
ø25	136	12	10	5	6	16	23	217	12	23	182	30	46	62	5.5	4.5	9.5	8.5
ø32	136	12	10	5	6	16	23	217	12	23	182	30	46	62	5.5	4.5	9.5	8.5
ø40	147	14	12	6	7	16	23	230	12	23	193	30	46	62	7.5	6.5	11.5	10.5

Code	With switch (T2W, T3W)				With bellows			
Bore size (mm)	GC	GD	RD	HD	XF	b	d	L
ø20	6.0	5.0	10.0	9.0	44	30	30	(Stroke/3) + 6
ø25	7.5	6.5	11.5	10.5	46	32	46	(Stroke/3.25) + 7
ø32	7.5	6.5	11.5	10.5	46	32	46	(Stroke/3.25) + 7
ø40	9.5	8.5	13.5	12.5	48	34	46	(Stroke/3.25) + 7

Dimensions

● Rod side flange (FA)

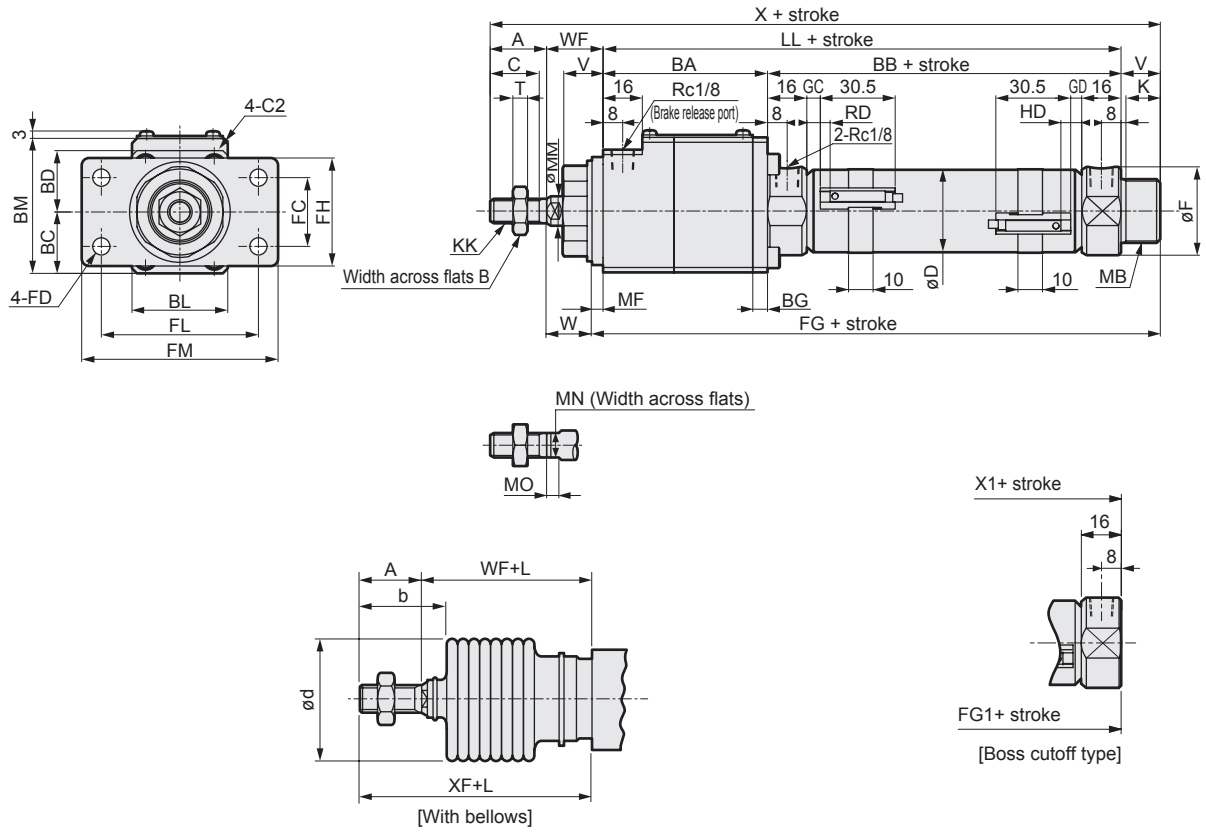

1 : Refer to page 693 for HD, RD and protruding dimensions of T1, T8* and 2-color LED switches.
*2 : For the L dimension, round up below the decimal point.
*3 : For the dimensions of the accessories, refer to page 694.

Code	Rod side flange (FA) basic dimensions															
Bore size (mm)	A	B	BA	BB	BC	BD	BG	BL	BM	C	D	F	K	KK	LL	MB
ø20	20	13	58	66	20	20	6	29	45	18	21.4	28	12	M8x1.0	124	M18x1.5
ø25	23	17	67	69	25	25	6	39	55	20	26.4	32	14	M10x1.25	136	M26x1.5
ø32	23	17	67	69	25	25	6	39	55	20	33.6	36	14	M10x1.25	136	M26x1.5
ø40	25	19	74	73	29	30	9	50	69	22	41.6	45	14	M12x1.5	147	M26x1.5

Code										Mounting dimensions						With switch (T0, T5, T2, T3)			
Bore size (mm)	MF	MM	MN	MO	T	V	W	WF	X	FC	FD	FG	FH	FL	FM	GC	GD	RD	HD
ø20	3.2	10	8	5	5	14	20.8	24	182	20	6	141.2	34	40	54	4.0	3.0	8.0	7.0
ø25	4.5	12	10	5	6	16	18.5	23	198	28	7	156.5	44	64	80	5.5	4.5	9.5	8.5
ø32	4.5	12	10	5	6	16	18.5	23	198	28	7	156.5	44	64	80	5.5	4.5	9.5	8.5
ø40	4.5	14	12	6	7	16	18.5	23	211	28	7	167.5	44	64	80	7.5	6.5	11.5	10.5

Code	With switch (T2W, T3W)				With bellows				Boss cutoff type	
Bore size (mm)	GC	GD	RD	HD	XF	b	d	L	X1	FG1
ø20	6.0	5.0	10.0	9.0	44	30	30	(Stroke/3) + 6	168	127.2
ø25	7.5	6.5	11.5	10.5	46	32	46	(Stroke/3.25) + 7	182	140.5
ø32	7.5	6.5	11.5	10.5	46	32	46	(Stroke/3.25) + 7	182	140.5
ø40	9.5	8.5	13.5	12.5	48	34	46	(Stroke/3.25) + 7	195	151.5

LCM
LCR
LCG
LCW
LCX
STM
STG
STS/STL
STR2
UCA2
ULK*
JSK/M2
JSG
JSC3/JSC4
USSD
UFCD
USC
UB
JSB3
LMB
LML
HCM
HCA
LBC
CAC4
UCAC2
CAC-N
UCAC-N
RCS2
RCC2
PCC
SHC
MCP
GLC
MFC
BBS
RRC
GRC
RV3*
NHS
HRL
LN
Hand
Chuk
MecHnd/Chuk
ShkAbs
FJ
FK
SpdContr
Ending

Dimensions

● Eye bracket (CA)

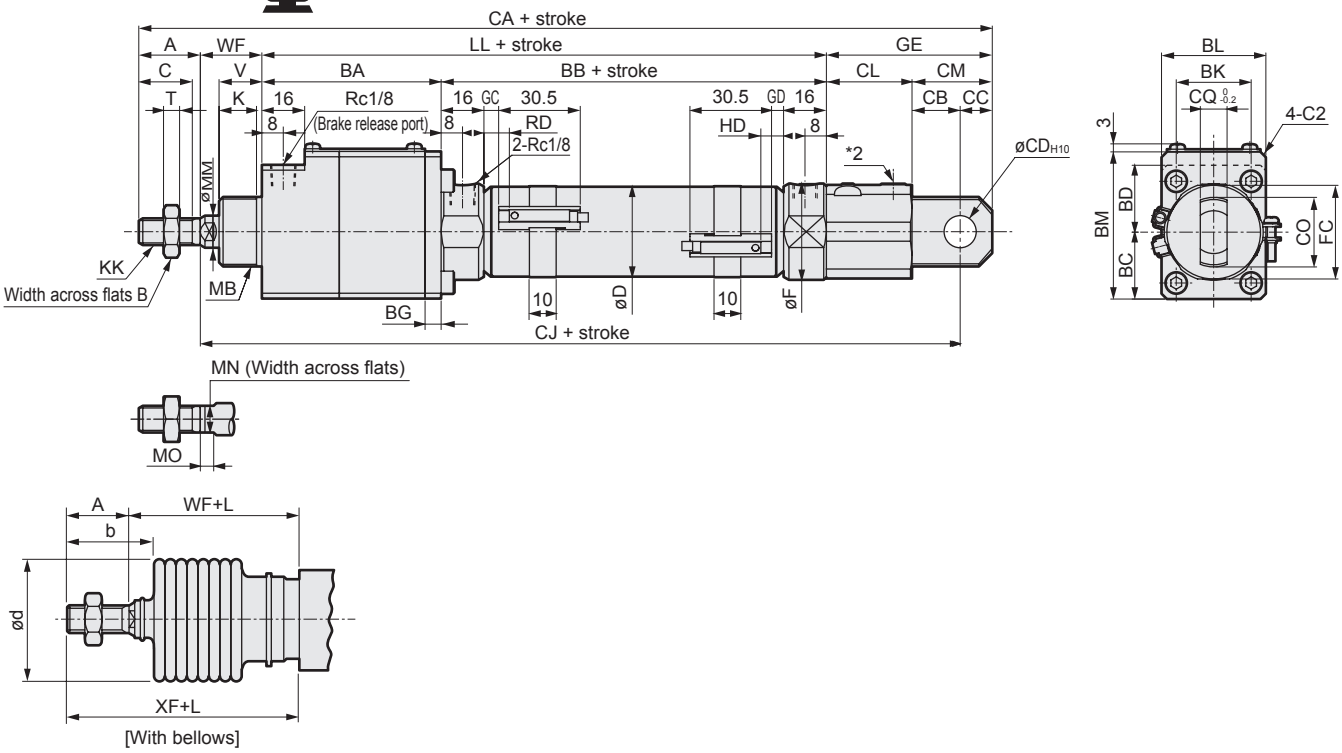

● With bracket (Option B2)

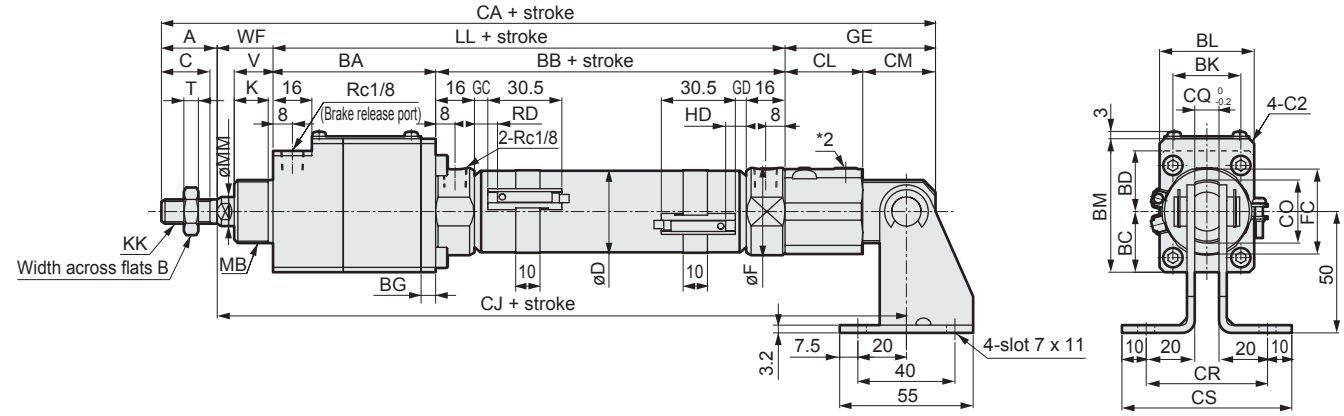

1 : Refer to page 693 for HD, RD and protruding dimensions of T1, T8* and 2-color LED switches.
*2 : It is not a piping port. *3 : For the L dimension, round up below the decimal point.
*4 : For the dimensions of the accessories, refer to page 694.

Code	Eye bracket (CA) basic dimensions																		
Bore size (mm)	A	B	BA	BB	BC	BD	BG	BK	BL	BM	C	D	F	FC	GE	K	KK	LL	MB
ø20	20	13	58	66	20	20	6	20	29	45	18	21.4	28	26	55	12	M8x1.0	124	M18x1.5
ø25	23	17	67	69	25	25	6	28	39	55	20	26.4	32	35	62	14	M10x1.25	136	M26x1.5
ø32	23	17	67	69	25	25	6	28	39	55	20	33.6	36	35	62	14	M10x1.25	136	M26x1.5
ø40	25	19	74	73	29	30	9	39	50	69	22	41.6	45	35	62	14	M12x1.5	147	M26x1.5

Code							Mounting dimensions											With switch (T0, T5, T2, T3)			
Bore size (mm)	MM	MN	MO	T	V	WF	CA	CB	CC	CD	CJ	CL	CM	CO	CQ	CR	CS	GC	GD	RD	HD
ø20	10	8	5	5	14	24	223	14	10	10	193	31	24	22	8	48	68	4.0	3.0	8.0	7.0
ø25	12	10	5	6	16	23	244	18	12	12	209	32	30	26	10	50	70	5.5	4.5	9.5	8.5
ø32	12	10	5	6	16	23	244	18	12	12	209	32	30	26	10	50	70	5.5	4.5	9.5	8.5
ø40	14	12	6	7	16	23	257	18	12	12	220	32	30	26	10	50	70	7.5	6.5	11.5	10.5

Code	With switch (T2W, T3W)				With bellows			
Bore size (mm)	GC	GD	RD	HD	XF	b	d	L
ø20	6.0	5.0	10.0	9.0	44	30	30	(Stroke/3) + 6
ø25	7.5	6.5	11.5	10.5	46	32	46	(Stroke/3.25) + 7
ø32	7.5	6.5	11.5	10.5	46	32	46	(Stroke/3.25) + 7
ø40	9.5	8.5	13.5	12.5	48	34	46	(Stroke/3.25) + 7

Dimensions

● Eye bracket integrated (CC) CAD

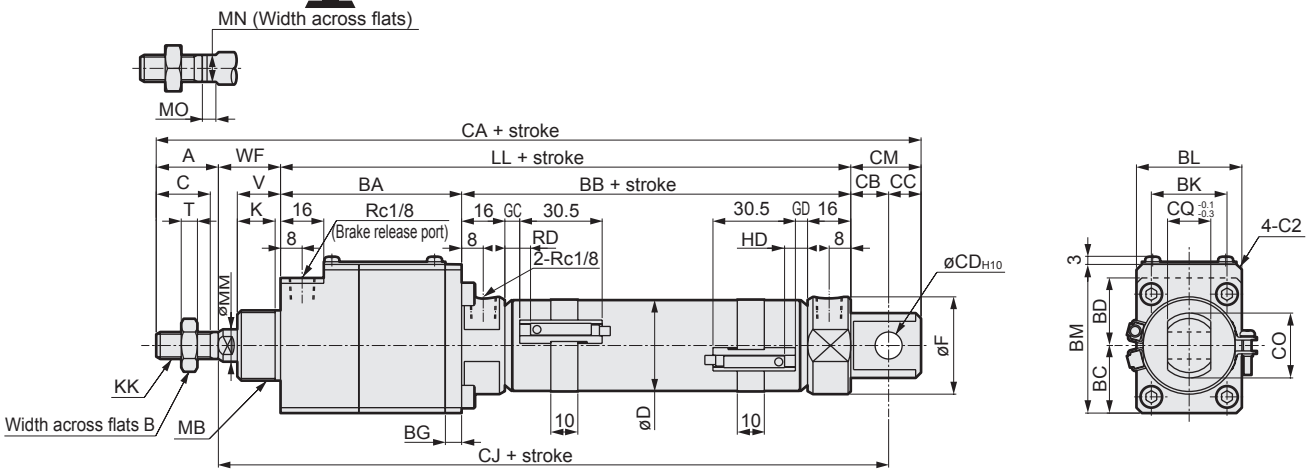

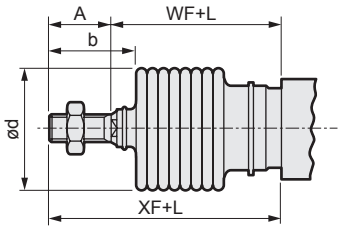

[With bellows]

● With bracket (Option B2)

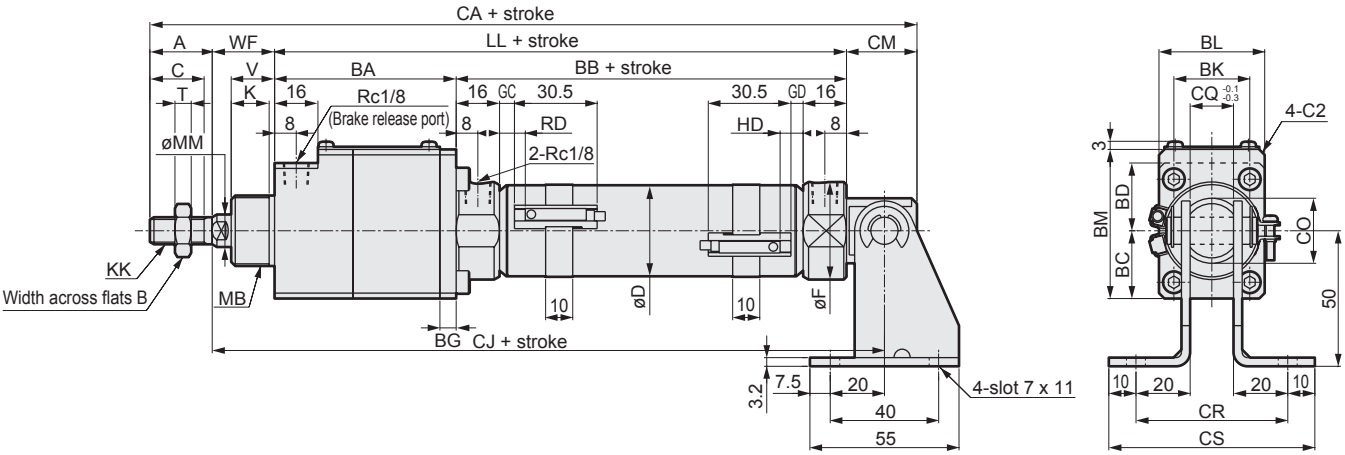

1 : Refer to page 693 for HD, RD and protruding dimensions of T1, T8* and 2-color LED switches.
*2 : For the L dimension, round up below the decimal point.
*3 : For the dimensions of the accessories, refer to page 694.

Code	Eye bracket integrated (CC) basic dimensions															
Bore size (mm)	A	B	BA	BB	BC	BD	BG	BK	BL	BM	C	D	F	K	KK	LL
ø20	20	13	58	66	20	20	6	20	29	45	18	21.4	28	12	M8x1.0	124
ø25	23	17	67	69	25	25	6	28	39	55	20	26.4	32	14	M10x1.25	136
ø32	23	17	67	69	25	25	6	28	39	55	20	33.6	36	14	M10x1.25	136
ø40	25	19	74	73	29	30	9	39	50	69	22	41.6	45	14	M12x1.5	147

Code								Mounting dimensions										With switch (T0, T5, T2, T3)			
Bore size (mm)	MB	MM	MN	MO	T	V	WF	CA	CB	CC	CD	CJ	CM	CO	CQ	CR	CS	GC	GD	RD	HD
ø20	M18x1.5	10	8	5	5	14	24	189	12	9	8	160	21	22	16	56	76	4.0	3.0	8.0	7.0
ø25	M26x1.5	12	10	5	6	16	23	203	12	9	8	171	21	24	16	56	76	5.5	4.5	9.5	8.5
ø32	M26x1.5	12	10	5	6	16	23	208	14	12	10	173	26	24	16	56	76	5.5	4.5	9.5	8.5
ø40	M26x1.5	14	12	6	7	16	23	225	16	14	12	186	30	30	20	60	80	7.5	6.5	11.5	10.5

Code	With switch (T2W, T3W)				With bellows			
Bore size (mm)	GC	GD	RD	HD	XF	b	d	L
ø20	6.0	5.0	10.0	9.0	44	30	30	(Stroke/3) + 6
ø25	7.5	6.5	11.5	10.5	46	32	46	(Stroke/3.25) + 7
ø32	7.5	6.5	11.5	10.5	46	32	46	(Stroke/3.25) + 7
ø40	9.5	8.5	13.5	12.5	48	34	46	(Stroke/3.25) + 7

LCM
LCR
LCG
LCW
LCX
STM
STG
STS/STL
STR2
UCA2
ULK*
JSK/M2
JSG
JSC3/JSC4
USSD
UFCD
USC
UB
JSB3
LMB
LML
HCM
HCA
LBC
CAC4
UCAC2
CAC-N
UCAC-N
RCS2
RCC2
PCC
SHC
MCP
GLC
MFC
BBS
RRC
GRC
RV3*
NHS
HRL
LN
Hand
Chuk
MecHnd/Chuk
ShkAbs
FJ
FK
SpdContr
Ending

Dimensions

● Rod side trunnion (TA)

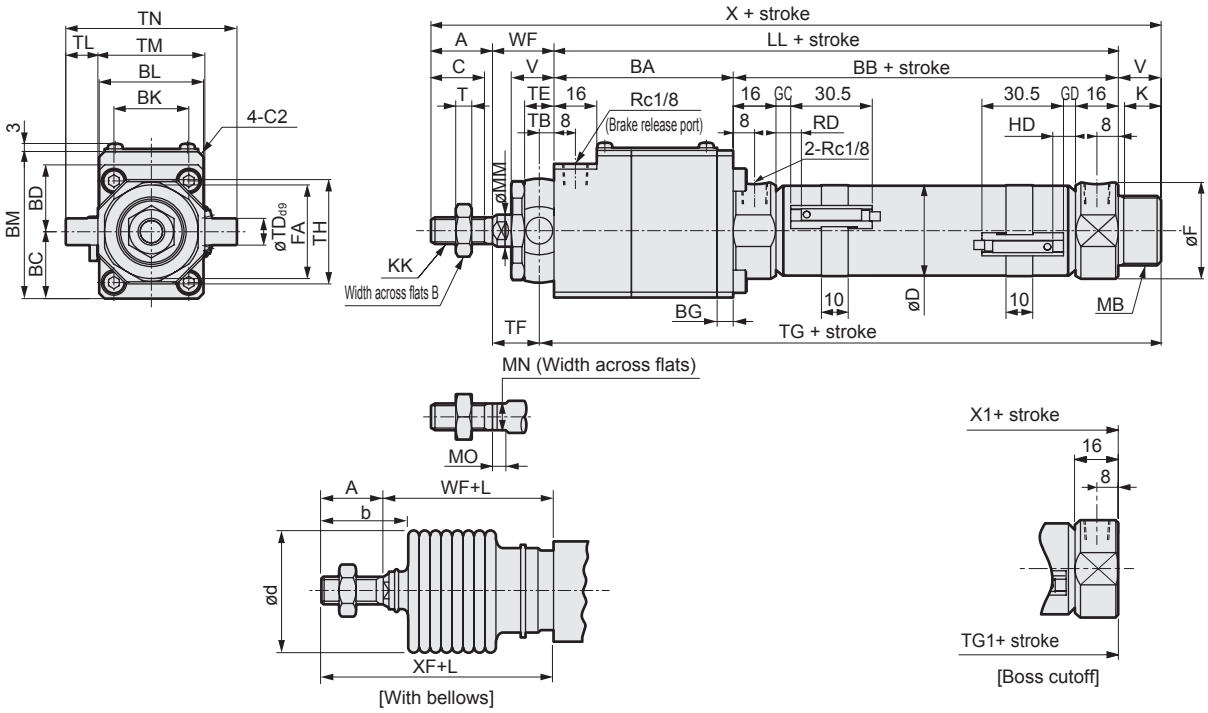

● With bracket (Option B2)

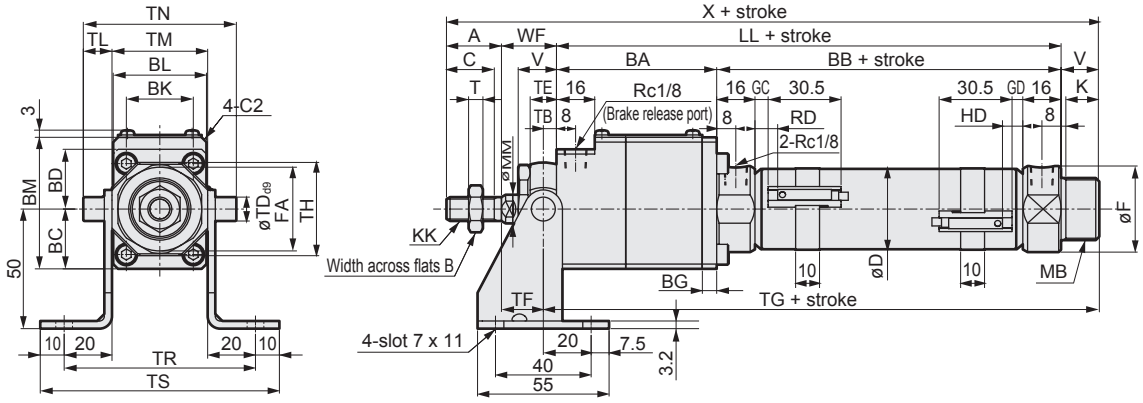

1 : Refer to page 693 for HD, RD and protruding dimensions of T1, T8* and 2-color LED switches.
*2 : For the L dimension, round up below the decimal point.
*3 : For the dimensions of the accessories, refer to page 694.

Code	Rod side trunnion (TA) basic dimensions																	
Bore size (mm)	A	B	BA	BB	BC	BD	BG	BK	BL	BM	C	D	F	FA	K	KK	LL	MB
ø20	20	13	58	66	20	20	6	20	29	45	18	21.4	28	26	12	M8x1.0	124	M18x1.5
ø25	23	17	67	69	25	25	6	28	39	55	20	26.4	32	35	14	M10x1.25	136	M26x1.5
ø32	23	17	67	69	25	25	6	28	39	55	20	33.6	36	35	14	M10x1.25	136	M26x1.5
ø40	25	19	74	73	29	30	9	39	50	69	22	41.6	45	35	14	M12x1.5	147	M26x1.5

Code								Mounting dimensions											With switch (T0, T5, T2, T3)			
Bore size (mm)	MM	MN	MO	T	V	WF	X	TB	TD	TE	TF	TG	TH	TL	TM	TN	TR	TS	GC	GD	RD	HD
ø20	10	8	5	5	14	24	182	4.5	8	9	19.5	142.5	29.5	8	30	46	70	90	4.0	3.0	8.0	7.0
ø25	12	10	5	6	16	23	198	5.5	10	11	17.5	157.5	39	12	40	64	80	100	5.5	4.5	9.5	8.5
ø32	12	10	5	6	16	23	198	5.5	10	11	17.5	157.5	39	12	40	64	80	100	5.5	4.5	9.5	8.5
ø40	14	12	6	7	16	23	211	5.5	10	11	17.5	168.5	44	9.5	53	72	93	113	7.5	6.5	11.5	10.5

Code	With switch (T2W, T3W)				With bellows				Boss cutoff	
Bore size (mm)	GC	GD	RD	HD	XF	b	d	L	X1	TG1
ø20	6.0	5.0	10.0	9.0	44	30	30	(Stroke/3) + 6	168	128.5
ø25	7.5	6.5	11.5	10.5	46	32	46	(Stroke/3.25) + 7	182	141.5
ø32	7.5	6.5	11.5	10.5	46	32	46	(Stroke/3.25) + 7	182	141.5
ø40	9.5	8.5	13.5	12.5	48	34	46	(Stroke/3.25) + 7	195	152.5

Dimensions

● Head side trunnion (TB)

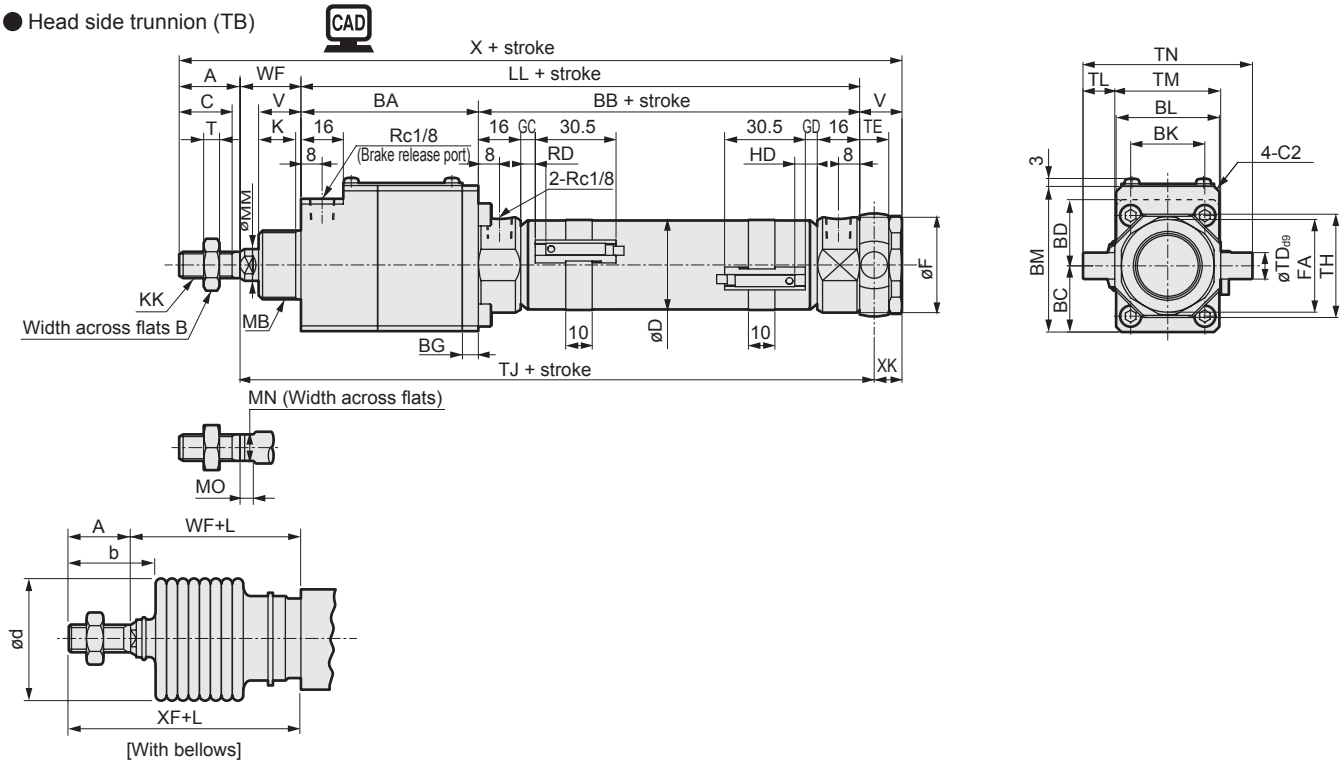

● With bracket (Option B2)

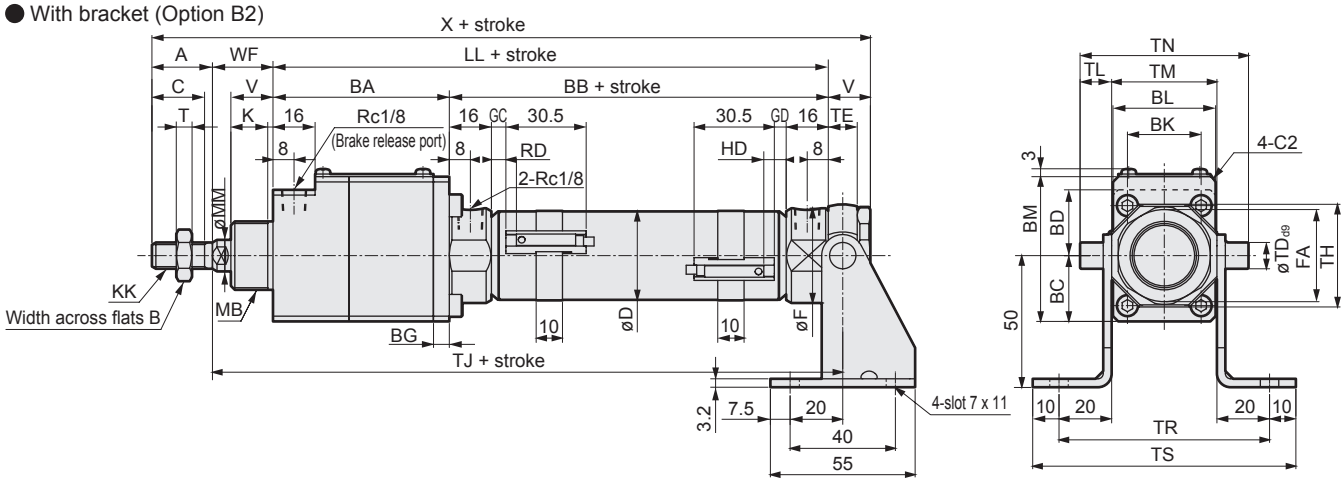

1 : Refer to page 693 for HD, RD and protruding dimensions of T1, T8* and 2-color LED switches.
*2 : For the L dimension, round up below the decimal point.
*3 : For the dimensions of the accessories, refer to page 694.

Code	Rod side flange (TB) basic dimensions																	
Bore size (mm)	A	B	BA	BB	BC	BD	BG	BK	BL	BM	C	D	F	FA	K	KK	LL	MB
ø20	20	13	58	66	20	20	6	20	29	45	18	21.4	28	26	12	M8x1.0	124	M18x1.5
ø25	23	17	67	69	25	25	6	28	39	55	20	26.4	32	35	14	M10x1.25	136	M26x1.5
ø32	23	17	67	69	25	25	6	28	39	55	20	33.6	36	35	14	M10x1.25	136	M26x1.5
ø40	25	19	74	73	29	30	9	39	50	69	22	41.6	45	35	14	M12x1.5	147	M26x1.5

Code									Mounting dimensions									With switch (T0, T5, T2, T3)			
Bore size (mm)	MM	MN	MO	T	V	WF	X	XK	TD	TE	TH	TJ	TL	TM	TN	TR	TS	GC	GD	RD	HD
ø20	10	8	5	5	14	24	182	9.5	8	9	29.5	152.5	8	30	46	70	90	4.0	3.0	8.0	7.0
ø25	12	10	5	6	16	23	198	10.5	10	11	39	164.5	12	40	64	80	100	5.5	4.5	9.5	8.5
ø32	12	10	5	6	16	23	198	10.5	10	11	39	164.5	12	40	64	80	100	5.5	4.5	9.5	8.5
ø40	14	12	6	7	16	23	211	10.5	10	11	44	175.5	9.5	53	72	93	113	7.5	6.5	11.5	10.5

Code	With switch (T2W, T3W)				With bellows			
Bore size (mm)	GC	GD	RD	HD	XF	b	d	L
ø20	6.0	5.0	10.0	9.0	44	30	30	(Stroke/3) + 6
ø25	7.5	6.5	11.5	10.5	46	32	46	(Stroke/3.25) + 7
ø32	7.5	6.5	11.5	10.5	46	32	46	(Stroke/3.25) + 7
ø40	9.5	8.5	13.5	12.5	48	34	46	(Stroke/3.25) + 7

LCM
LCR
LCG
LCW
LCX
STM
STG
STS/STL
STR2
UCA2
ULK*
JSK/M2
JSG
JSC3/JSC4
USSD
UFCD
USC
UB
JSB3
LMB
LML
HCM
HCA
LBC
CAC4
UCAC2
CAC-N
UCAC-N
RCS2
RCC2
PCC
SHC
MCP
GLC
MFC
BBS
RRC
GRC
RV3*
NHS
HRL
LN
Hand
Chuk
MecHnd/Chuk
ShkAbs
FJ
FK
SpdContr
Ending

Dimensions

● With valve for brake

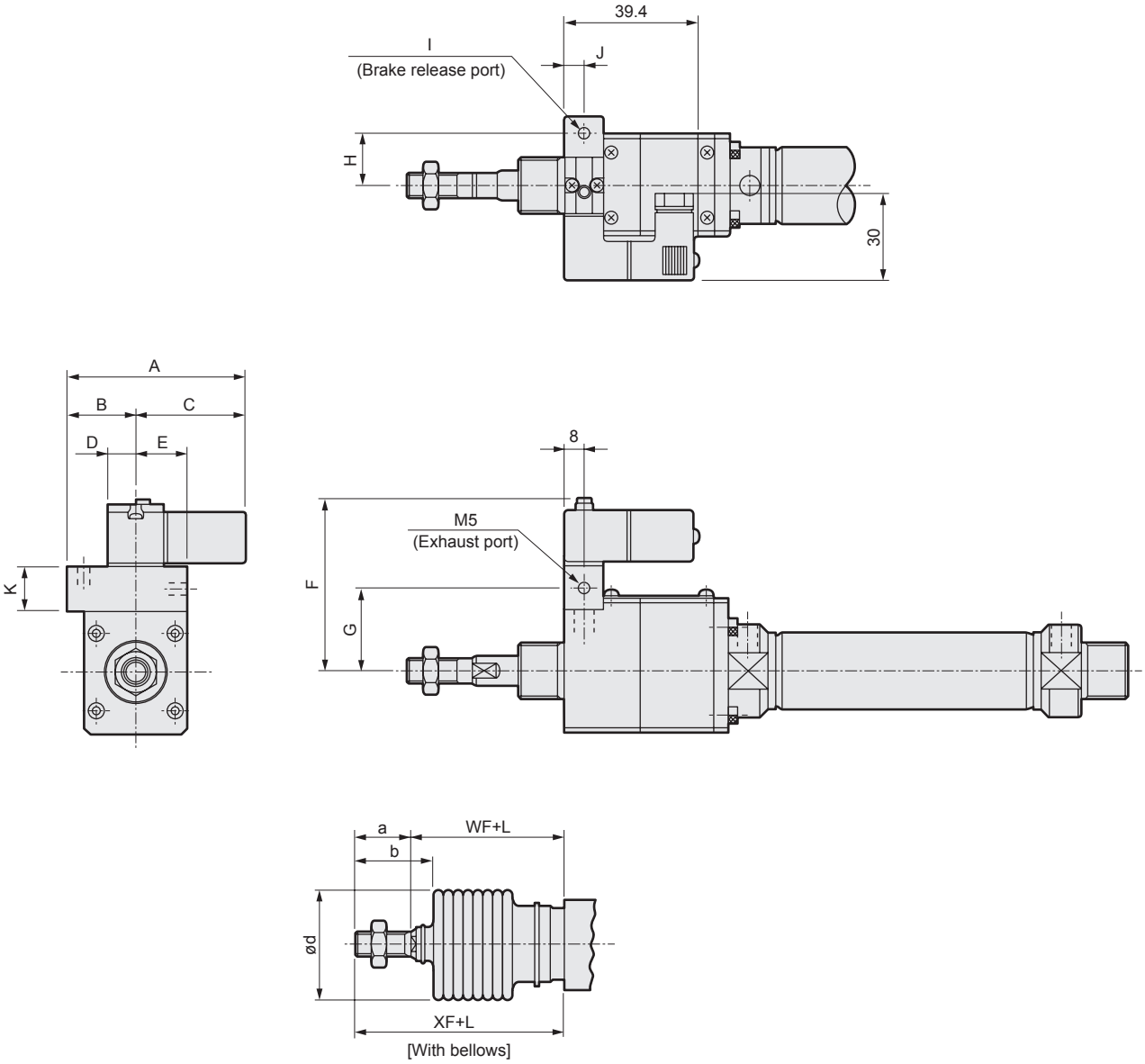

*Dimensions not listed below are the same as the basic type on page 685.
*1 : For the L dimension, round up below the decimal point.
*2 : For the dimensions of the accessories, refer to page 694.

Code / Bore size (mm)	A	B	C	D	E	F	G	H	I	J	K
ø20	56.5	25	31.5	8	15	54	26.5	17	M5	8	12
ø25	57	21	36	4	18	60	31	16	Rc1/8	9	13
ø32	57	21	36	4	18	60	31	16	Rc1/8	9	13
ø40	57	24	33	7	18	65	36	16	Rc1/8	9	13

Code	With bellows					
Bore size (mm)	a	WF	XF	b	d	L
ø20	20	24	44	30	30	(Stroke/3) + 6
ø25	23	23	46	32	46	(Stroke/3.25) + 7
ø32	23	23	46	32	46	(Stroke/3.25) + 7
ø40	25	23	48	34	46	(Stroke/3.25) + 7

ULK Series common dimensions (with T1, T8 switches, with 2-color LED switch)

● ULK-**-**-T1H/V, T8H/V, T $^{2}_{3}$YH/V

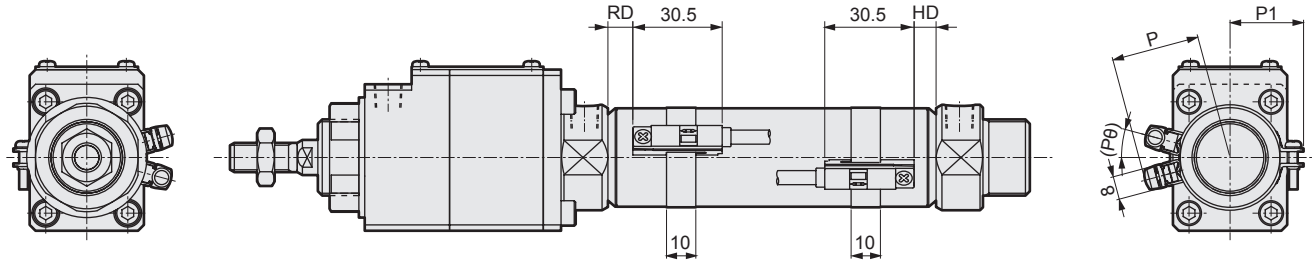

Switch installation dimensions

Code / Bore size (mm)	1-color LED (T1, T8) 2-color LED (T $^{2}_{3}$Y)							
	RD		HD		P		P1	(Pθ)°
	T1,T $^{2}_{3}$Y	T8	T1,T $^{2}_{3}$Y	T8	T1	T $^{2}_{3}$Y,T8		
ø20	7.0	2.0	6.0	1	28.5	23.1	19.5	22
ø25	8.5	3.5	7.5	2.5	31.0	25.6	22.0	18
ø32	8.5	3.5	7.5	2.5	35.5	30.1	25.5	15
ø40	10.5	5.5	9.5	4.5	39.5	34.1	29.5	12

Accessory dimensions (rod/bracket/pin) with bellows

● Rod eye (I)

CAD

Material: Steel
Zinc chromate treatment

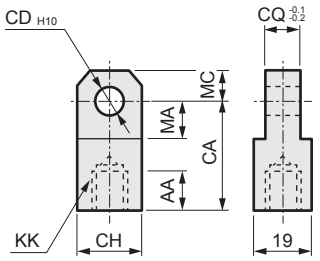

Model No.	Applicable bore size (mm)	AA	CA	CD	CH	CQ	KK	MA	MC	Wt (g)
M1-I-20	20	14	30	10	19	8	M8x1.0	13	10	60
M1-I-30	25/32	14	36	12	25	10	M10x1.25	16	12	106
M1-I-40	40	14	36	12	25	10	M12x1.5	16	12	100

● Rod clevis (Y)

CAD

Material: Steel
Zinc chromate treatment

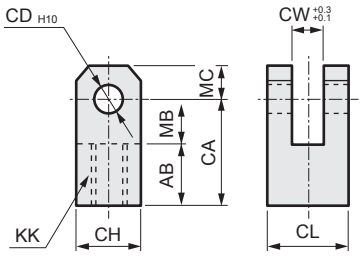

A pin, a washer, and a split pin are attached.

Model No.	Applicable bore size (mm)	AB	CA	CD	CH	CL	CW	KK	MB	MC	Wt (g)
M1-Y-20	20	17	30	10	19	19	8	M8x1.0	13	10	99
M1-Y-30	25/32	20	36	12	25	25	10	M10x1.25	16	12	197
M1-Y-40	40	20	36	12	25	25	10	M12x1.5	16	12	193

● Clevis bracket (B2)

CAD

Material: Steel, zinc chromate treatment

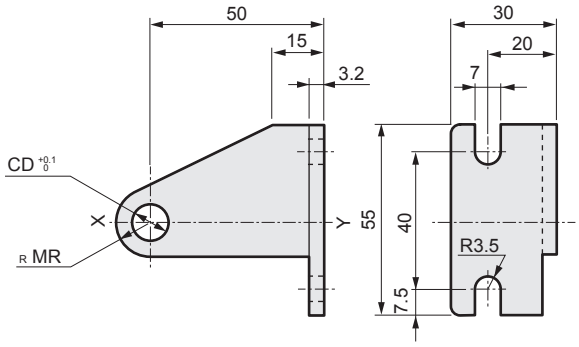

Model No.	Compatibility	Applicable bore size (mm)	CD	MR	Weight (g)
M1-B2-20-CC	ULK-CC	20/25	8	8	145
M1-B2-30-CC		32	10	11	163
M1-B2-40-CC		40	12	11	170
M1-B2-30-CA	ULK-CA	20	10	11	158
M1-B2-40-CA		25/32/40	12	11	162
M1-B2-20-TA	ULK-TA/TB	20	8	8	132
M1-B2-30-TA		25/32/40	10	11	142

*1: One pair is composed of two pieces with XY symmetry.
*2: The model No. above includes snap ring and pin. 2 pieces are included in a set. (However, the pin and snap rings are not included with the trunnion.)

● Rod clevis pin (P)

Material: Steel, zinc chromate treatment

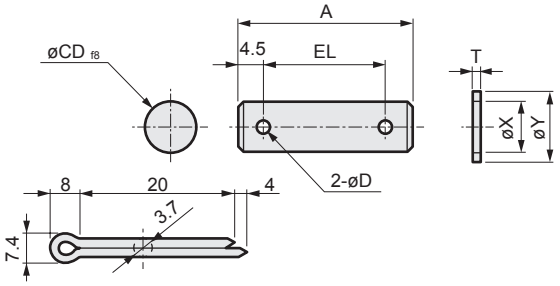

Model No.	Applicable bore size (mm)	A	D	CD	EL	T	X	Y	Weight (g)
M1-P-20	20	37	4	10	28	1.6	10.5	18	29
M1-P-30	25/32/40	46	4	12	37	2.3	12.5	22	50

Note : A pin, a washer and a split pin for rod clevis use are attached with the product.

● Clevis bracket pin (P1) (P2)

Material: Steel
Zinc chromate treatment

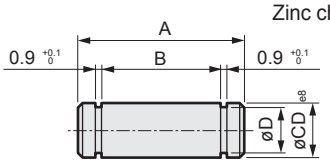

Model No.	Compatible model and Bore size (mm)	A	B	CD	D	Applicable snap ring	Weight (g)
M1-P1-20	ULK-CC-20/25	33	28	8	7	E type 7	13
M1-P1-30	ULK-CC-32	33	28	10	9	E type 9	21
M1-P1-40	ULK-CC-40	37	32	12	9	E type 9	32
M1-P2-20	ULK-CA-20	25	20	10	9	E type 9	16
M1-P2-30	ULK-CA-25/32/40	27	22	12	9	E type 9	24

Note : A pin and snap ring for bracket use are attached with the product.
(However, the pin and snap rings are not included with the trunnion.)

Applications

This product can be used with devices and equipment requiring the following of functions.

1 When multipoint positioning is required (transfer/positioning)

The equipment can be accurately stopped at several required positions.

2 When position locking is required

The brakes can be applied and held instantly when the air source or power is turned OFF (during power failure or accident), preventing equipment damage and securing safety.

3 When emergency stop is required

The cylinder can be stopped with electric signals, etc., when a worker enters a hazardous area.

4 Workpiece lock

When locking the workpiece to the jig or mounting base, etc., it can be locked even if there is no pneumatic source or power. The workpiece can be transferred while locked to the jig.

Applications

1 Linear multipoint welding

When welding steel plates, etc., linearly at several points, this cylinder can be used to move and position the slide table or welding gun.

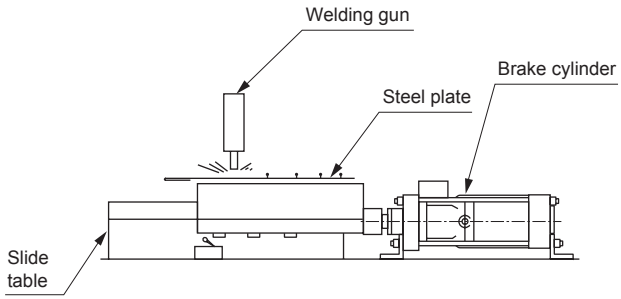

4 Movement to conveyor

Move products to the conveyor one at a time.

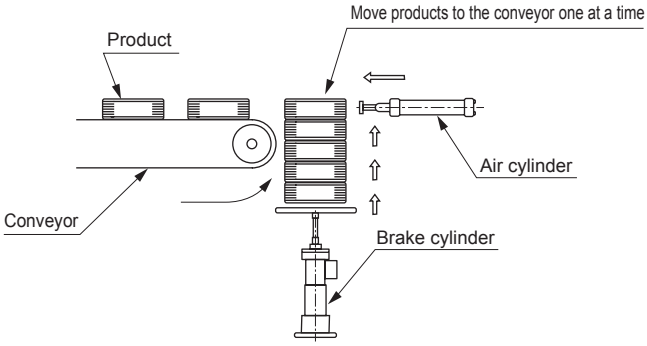

2 Position locking

If there is a load in the vertical direction and the load could fall with its own weight when the pressure source is cut off, the brake cylinder brakes will be applied to prevent falling.

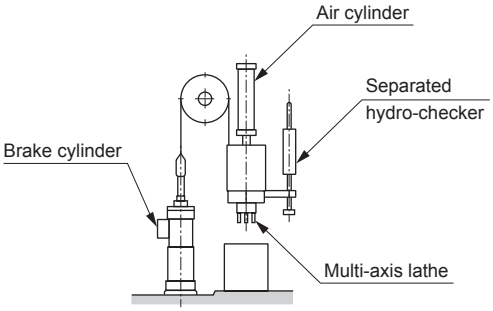

5 When several cylinders with different strokes are required

When different-sized products are in motion on a conveyor, etc., in many cases the stroke for the cylinders set there must also be changed. Using the brake cylinder, a cylinder compatible with different strokes is created electrically.

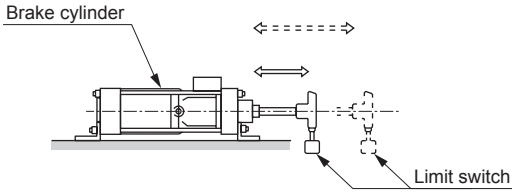

3 Workpiece lock

When locking the workpiece to the jig, etc., if the brake cylinder is used, it will be locked even when the pneumatic source or power is OFF.

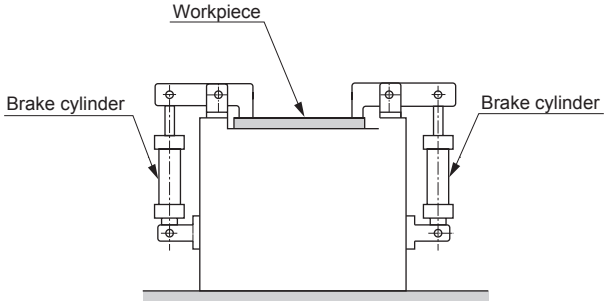

6 Hopper open/close

In the case where a hopper must be closed at a specific weight of powder, accurate measurement is obtained by stopping the hopper, measuring it accurately and then completely closing it.

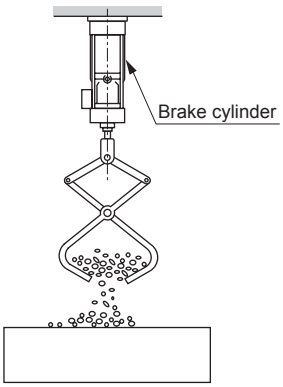

Configurations table

● Valve kit for brake

ULK-V – Bore size – **VALVE-KIT** – Voltage

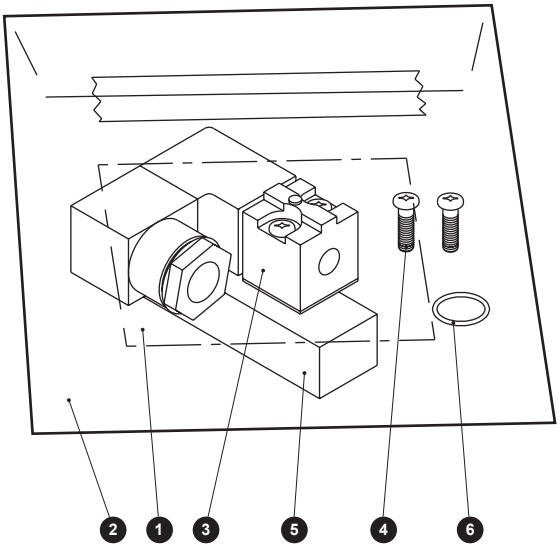

No.	Part name	Quantity
1	Label	1
2	Plastic bag or plastic sheets	1
3	Brake release valve	1
4	Cross-recessed pan head machine screw	2
5	Sub-plate	1
6	Gasket	1

● Brake unit

ULK – Bore size – **BRAKE-UNIT**

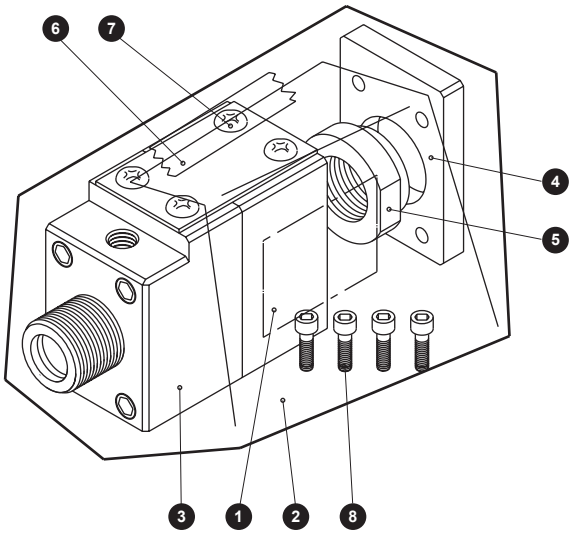

No.	Part name	Quantity
1	Label	1
2	Plastic bag or plastic sheets	1
3	Brake assembly	1
4	Brake flange	1
5	Fixing nut	1
6	Cover	1
7	Cross-recessed pan head machine screw	4
8	Hexagon socket head cap screw	4

Pneumatic components

Safety Precautions

Be sure to read this section before use.

Refer to Intro Page 73 for general information of the cylinder, and to Intro Page 80 for general information of the cylinder switch.

Product-specific cautions: Brake cylinder ULKP/ULK Series

Design/selection

WARNING

■ Design a structure that prevents person(s) from coming into contact with the driven workpiece as well as the moving parts of the cylinder with brakes.

Provide a protective cover so that no human body directly touches the unit. In case of possible contact, provide safety measures such as a sensor for emergency stop before making contact and a buzzer to warn of danger.

■ Use a balanced circuit that accommodates the protrusion of the piston rod.

If the cylinder is stopped part-way in the stroke with the brake, etc., and air pressure is applied to one side of the cylinder, the piston rod will pop out at high speeds when the brake is released. This could cause physical harm, such as pinched hands or feet, or mechanical damage. Use a balance circuit, such as the recommended pneumatic pressure circuit, to prevent popping out.

The brake cylinder has no-lubrication specifications. Never lubricate this cylinder. This may cause the brake to malfunction.

■ The holding force (max. static load) is the ability to hold static load that is not accompanied by vibration or shock, in a state where the brake is operating under no load.

Take care when constantly using near the upper limit of the holding force.

■ Do not apply loads with impact, strong vibration, or torque while brakes are activated.

If load is externally applied with impact, or if strong vibration or rotational force is externally applied, the holding force can be reduced, creating a dangerous situation.

■ Consider the stopping accuracy and overrun distance during the braking.

Because a mechanical lock is applied, the cylinder does not stop instantly when the stop signal is issued, but stops with a time-wise delay. The stroke at which the cylinder slides due to this delay is the overrun distance. The max. and min. width of the overrun distance is the stopping accuracy.

- To achieve the required stop position, move the limit switch forward by the overrun distance.
- The limit switch must have a detection length (dog length) of the overrun distance + α.
- The operating range of CKD cylinder switches is 7 to 16 mm, depending on the switch model. If overrun distance exceeds this, provide self-holding of the contact at the switch load.

■ Do not use multiple synchronized cylinders with brakes.

If the synchronization deviates, an excess moment load or load concentration is applied to the cylinder where the brake was applied first, risking brake release defects, shortened service life, or damage.

■ In order to improve stopping accuracy, ensure that the brake stops the cylinder as soon as possible after receiving the stop signal.

Use a high response DC control electricity circuit or valve, and set the valve as close to the cylinder as possible.

■ The stopping accuracy is susceptible to fluctuations in piston speed.

If the piston speed changes due to load fluctuations or by some disturbance while the cylinder is moving, the stopping position may vary sharply. Make sure that the piston speed stays the same up to just before the stop position. As well, since the speed changes significantly in the cushioned range and in the acceleration range after starting operation, the variability of the stopping position will increase.

The stopping accuracy with piston speed of 300 mm/s with no load is ±1.0 mm (reference value). This value differs based on the device used. For more information, refer to the page on stopping accuracy and overrun.

■ Basic circuit

Always adopt the following circuit even for position locking and emergency stop applications. A 2-position valve cannot be used because it affects the brake section even when the cylinder thrust is stopped.

Maintain thrust and load balance with the following circuit. Brakes may not be released when load is applied to brakes.

- Horizontal load

When piping is as shown in Fig. 1, equal pressure is applied to both ends of the piston when stopped to prevent the rod from popping out when the brakes are released. Install a regulator with check valve on the head side to maintain thrust balance.

Fig.1

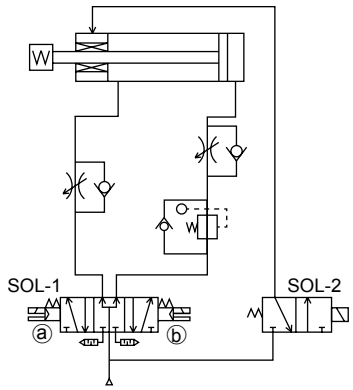

ⓐ SOL-1 ⓑ		SOL-2	Operational status
OFF	OFF	OFF	Stop
ON	OFF	ON	Reverse
OFF	ON	ON	Forward

LCM
LCR
LCG
LCW
LCX
STM
STG
STS/STL
STR2
UCA2
ULK*
JSK/M2
JSG
JSC3/JSC4
USSD
UFCD
USC
UB
JSB3
LMB
LML
HCM
HCA
LBC
CAC4
UCAC2
CAC-N
UCAC-N
RCS2
RCC2
PCC
SHC
MCP
GLC
MFC
BBS
RRC
GRC
RV3*
NHS
HRL
LN
Hand
Chuk
MecHnd/Chuk
ShkAbs
FJ
FK
SpdContr
Ending

● For downward vertical load

If load faces downward as shown in Fig. 2, the rod malfunctions in the load direction when brakes are released. Place a regulator with a check valve on the head side to reduce thrust in the load direction and balance the load.

Fig.2

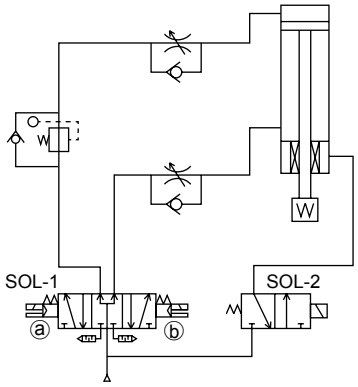

ⓐ SOL-1	ⓑ	SOL-2	Operational status
OFF	OFF	OFF	Stop
ON	OFF	ON	Drop
OFF	ON	ON	Rise

● For upward vertical load

If load faces upward as shown in Fig. 3, the rod malfunctions in the load direction when brakes are released. Place a regulator with a check valve on the rod side to reduce thrust in the load direction and balance the load.

Fig.3

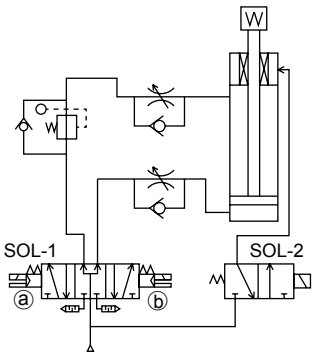

ⓐ SOL-1	ⓑ	SOL-2	Operational status
OFF	OFF	OFF	Stop
ON	OFF	ON	Drop
OFF	ON	ON	Rise

■ Release brakes before cylinder operation. The brake may not be released when the cylinder is operating at high speed.

■ If back pressure is applied to the locking mechanism, the lock may be released. Use the brake release valve as a single unit, or use an individual exhaust manifold.

■ Use a 3-position P/A/B connection (pressurization on both sides) valve for the cylinder drive to prevent the piston from popping out when starting.

■ To maintain balance of the thrust, including the load, the side with the larger thrust should have a regulator with a check valve.

⚠ CAUTION

■ Stopping accuracy

● Stopping pitch and load factor

Stopping accuracy differs with stopping pitch and load factor. The load factor below is recommended for achieving specified stopping accuracy.

Stop pitch	Load factor
50 mm or less	20% of thrust
50 mm to 100 mm	40% of thrust
100 mm or more	60% of thrust

● Selection of valve for brake

The stopping accuracy and overrun distance will change according to the responsiveness of the brake valve. Refer to the ULK-V brake valve electric specifications. Connect the valve directly to the brake port to improve stopping accuracy.

● When using a PLC (programmable controller)

If a PLC (programmable controller) is used as the electrical control unit for the valve for brake, stopping accuracy drops due to scan time (computing time). When using a PLC, do not assemble the valve for brake into the PLC circuit.

■ Do not make major changes in applied load when stopped with brakes, or the stopping position may change.

■ Although the contact service life of the reed switch varies depending on usage conditions, it will generally last several million cycles. The contact service life is reached sooner if the device is used continuously or operated at a high frequency. In this case, use a proximity switch with no contact.

Mounting, installation and adjustment

⚠ WARNING

■ Release brakes before coupling the load to the end of the rod.
If coupled while brakes are applied, torque or load exceeding holding force may be applied to the piston rod and damage the brake mechanism.

■ If the brake is released while air is applied to only one side of the cylinder, the piston rod can pop out at high speed, creating a dangerous situation. When releasing the brake during adjustment or other maintenance, always observe the following:

- Check that no one is in the movable range of the load and that no problems will arise if the load moves when brakes are released.
- When releasing the brake, perform position locking or take other measures:
  · Place the load to the bottom end
  · Pressurize both sides
  · Place a strut
  to prevent the load from falling.
- Confirm that air is not pressured on only one side of the cylinder when releasing brakes.
- The ULK Series can be manually released by pushing down the brake plate in the direction of the arrow using a bolt or the like. However, note that only the PUSH will be released if the brake plate is not entirely pushed down. Since there are 2 brake plates, brakes are not released unless both brake plates are pressed over. (Always remove the bolt ① and attach the cover ② during normal use.)

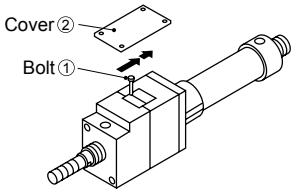

■ Brakes are released manually or by pressurizing the brake release port. When mounting the load, the brake release operation may cause the load to fall; make sure to check that the brake is operational when the manual release operation is set to default or when there is no air in the brake release port.

■ Do not apply torque to the rod when braking, as the holding force will decrease, creating hazardous conditions. Also, use this product in mechanisms in which the rod does not rotate.

■ Do not apply to the cylinder any force that exceeds the brake holding force listed in the catalog.

■ If there is any play, such as looseness, in the brake signal dog, stopping accuracy is affected. Securely fix to eliminate play, etc.

■ If the piston speed is fast, the detection dog must be long enough to match relay response time. If the dog is short, the stop signal is not output and operation does not stop.

⚠ CAUTION

■ Adjust the air balance in the cylinder.
With brakes released, place a load on the cylinder and balance the load by adjusting pneumatic pressure applied to the cylinder rod side and head side. Malfunctions such as piston popping out during brake release or abnormal brake release can be prevented by accurately balancing the load.

■ Adjust the installation position of the detector parts, including the cylinder switch.
When braking, consider the overrun distance vis-a-vis the desired stop position and adjust the installation positions for detector parts, including the cylinder switch.

■ Load fluctuations during the reciprocating stroke of the cylinder can cause inconsistent piston speed, leading to greater variation in the stop position. Adjust the mounting of the load so as to prevent any load fluctuations during the reciprocating stroke of the cylinder, especially before the stop position.

■ Since the speed changes significantly in the cushioned range and in the acceleration range after starting operation, the variability of the stopping position will increase. Therefore, be careful during step operation with short stroke length from the operation start point to the next position.

■ Load to piston rod
Operate the cylinder so that load applied to the piston rod is always applied in the axial direction more strictly than with a general-purpose air cylinder. Limit load movement using guides so play and torsion do not occur.

■ Maintaining the rod sliding parts
Protect the piston rod sliding surface from scratches and dents. Such scratches and dents can cause damage to packings, resulting in leakage and/or brake failure.

Use/maintenance

1. Common

⚠ WARNING

- The brake section can be removed from the cylinder body. Do not disassemble or inspect brakes, or a hazardous situation may occur when brakes are used again.
- The required grease is applied to brakes. Avoid applying extra grease and do not wipe grease off.
- The required grease is applied when brakes are replaced, so there is no need to apply grease to rods.
- Always use the product with the dust cover on, except for when performing manual release, in order to prevent failure or malfunction.

⚠ CAUTION

- Air supply pipes that are too narrow or too long can reduce stopping accuracy.
- Frictional resistance increases and causes the piston speed to change when the cylinder has been stopped for a long time, such as when using first thing in the morning or afternoon. This may impair stopping accuracy. Conduct conditioning operations to obtain a stable stopping accuracy.

2. Common (With T type switch)

⚠ CAUTION

- When moving the switch position to the stroke length direction
  - The 1-color display switch can be fine-tuned by ±3 mm from the default. If the adjusting range exceeds ±3 mm, or when fine-tuning the 2-color display switch, move the band position.
  - Loosen the switch fixing screw, shift the switch along the rail, then tighten at the specified position.
    When using T2, T3, T0, T5, T2W or T3W, use a flathead screwdriver (clockwork screwdriver, precision screwdriver, etc.) with a grip diameter of 5 to 6 mm, a 2.4 mm or smaller tip, and a thickness of 0.3 mm or less to tighten the screws with a tightening torque of 0.1 to 0.2 N·m.
    When using T1, T*C, T2J, T2Y, T3Y, or T8, tighten the screw with a tightening torque of 0.5 to 0.7 N·m.
  - The switch bracket rail has a marking 4 mm from the rail end. Use as a guide to the mounting position when replacing the switch.
    Switch rail markings are set to the default switch max. sensitivity position.
    The max. sensitivity position will change when the switch is changed or when the band is moved. Adjust the position accordingly in this case.

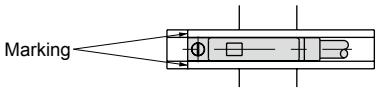

- When moving the switch position to the circumferential direction
  - Loosen the band fixing screw, shift the switch rail in the circumferential direction, then tighten at the specified position.
    Tightening torque is 0.6 to 0.8 N·m.

- Shifting the band position
  - Loosen the band fixing screw, shift the switch rail and band along the cylinder tube, and tighten at the specified position.
    Tightening torque is 0.6 to 0.8 N·m.

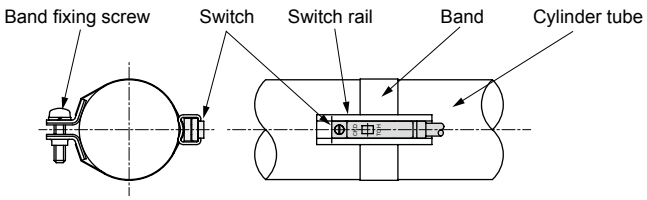

JSK2/JSM2

With brake/position locking Brake cylinder (small bore size)

ø20/ø25/ø30/ø32/ø40

Overview

A reliable brake is integrated to the medium bore size (ø20 to ø40 mm) standard cylinder (CMA2/CMK2) series.

Features

[JSK2]
Swaging with stainless steel tube.
Aluminum cover is used to reduce weight.

[JSM2]
Robust design enduring severe use conditions.
The cover screw-in model is easy to assemble/disassemble.

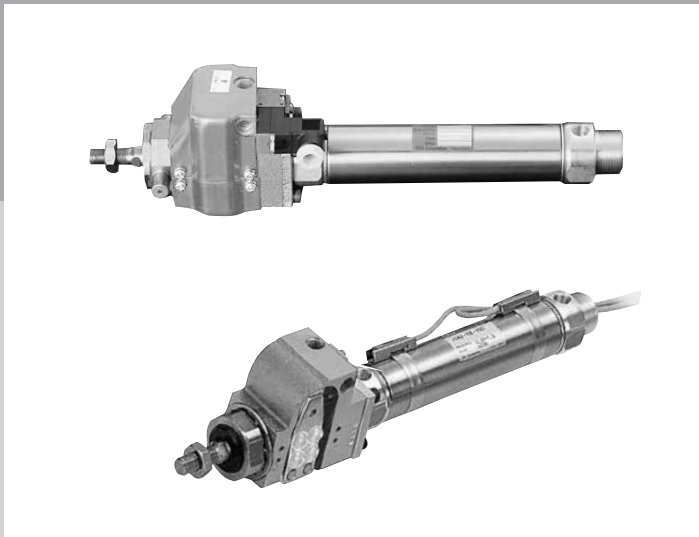

CONTENTS

Series variation 702
Product introduction 702
Variation and option combination selection table 704

JSK2 (swaging)
● Double acting/single rod (JSK2) 706
● Double acting/with valve for brake (JSK2-V) 706

JSM2 (disassembly)
● Double acting/single rod (JSM2) 720
● Double acting/with valve for brake (JSM2-V) 720

JSK2/JSM2 Series common accessory dimensions 731
Brake cylinder common technical data 836
Brake cylinder common applications 837
⚠ Safety precautions 732

The cylinder switches T2YH, T2YV, T3YH, and T3YV are scheduled for end of production at the end of December 2023.

Series variation

Brake cylinder JSK2/JSM2 Series

Variation	Model No. JIS symbol	Bore size (mm)	Standard stroke (mm) 25	50	75	100	125	150	175	200	250	300	Min. stroke (mm)	Max. stroke (mm)
Swaging model/ double acting	JSK2 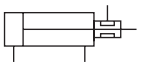	ø20/ø25/ø32/ø40	●	●	●	●	●	●	●	●	●	●	5	700
Swaging model/double acting/with valve for brake	JSK2-V	ø20/ø25/ø32/ø40	●	●	●	●	●	●	●	●	●	●	5	700
Disassembly/ double acting	JSM2 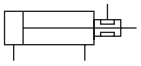	ø20/ø30/ø40	●	●	●	●	●	●	●	●	●	●	1	700
Disassembly/double acting/with valve for brake	JSM2-V	ø20/ø30/ø40	●	●	●	●	●	●	●	●	●	●	1	700

Product introduction (JSK2)

- Stopping accuracy ±1.0 mm or less
  Cylinder speed 300 mm/s with no load
- Enhanced safety
  The rod will immediately be locked with a holding force equivalent to thrust at 0.49 MPa even if the air pressure source and power are OFF.
- Air cylinder
  No-lubrication air cylinder
  CMK2 is adopted.
- Brake section

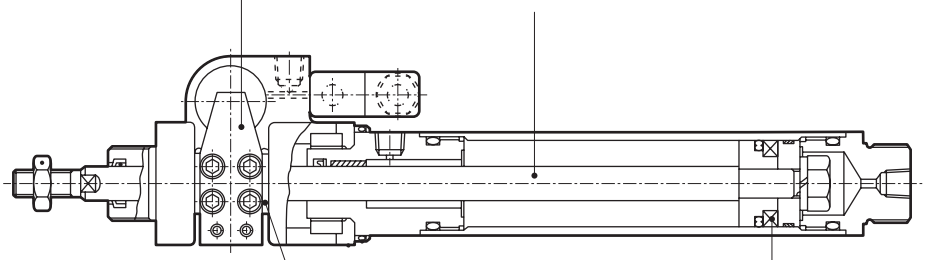

- Brake shoe metal
  FCD cast iron material used.
  Excellent durability and soft braking force.
- Piston magnet
  The plastic magnet parts attached as standard allow easy modification to cylinder with switch.

This unique braking mechanism ensures high stopping accuracy and sufficient holding force. Enhanced safety.

●: Standard ◎: Option ■: Not available

	Custom stroke (per mm)	Mounting							Option						Accessory			Switch	Page
		Basic	Axial foot	Rod side flange	Eye bracket	Eye bracket integrated	Rod side trunnion	Head side trunnion	Bellows (100°C)	Bellows (250°C)	Piston rod material change	Same port position	Boss cutoff	Brake section with cover*1	Rod eye	Rod clevis	Clevis bracket		
		00	LB	FA	CA	CC	TA	TB	J	L	M	P	V	U	I	Y	B2		
	1	●	●	●	●	●	●	●	◎	◎	◎		◎	◎	◎	◎	◎	◎	706
	1	●	●	●	●	●	●	●	◎	◎	◎		◎	◎	◎	◎	◎	◎	706
	1	●	●	●	●		●	●	◎	◎	◎	◎		◎	◎	◎	◎	◎	720
	1	●	●	●	●		●	●	◎	◎	◎	◎		◎	◎	◎	◎	◎	720

*1: For a TA mounting, the brake section with cover “U” cannot be selected.

LCM
LCR
LCG
LCW
LCX
STM
STG
STS/STL
STR2
UCA2
ULK*
JSK/M2
JSG
JSC3/JSC4
USSD
UFCD
USC
UB
JSB3
LMB
LML
HCM
HCA
LBC
CAC4
UCAC2
CAC-N
UCAC-N
RCS2
RCC2
PCC
SHC
MCP
GLC
MFC
BBS
RRC
GRC
RV3*
NHS
HRL
LN
Hand
Chuk
MecHnd/Chuk
ShkAbs
FJ
FK
SpdContr
Ending

Variation and option combination selection table

● : Standard
◎ : Option
○ : Available (made-to-order product)
△ : Available depending on conditions (Contact CKD.)
x : Not available

Category		Category	Variation		Port thread		Option					
			Double acting basic	With valve	NPT	G	Polyolefin with bellows	Silicone rubber with bellows	Piston rod material stainless steel	Specify piston rod end form	Boss cutoff	Brake section with cover
		Code	None	V	N	G	J	L	M	N	V	U
Variation	Double acting basic	Blank			○	○	◎	◎	◎	○	◎	◎
Variation	With valve	V			○	○	◎	◎	◎	○	◎	◎
Port thread	NPT	N				x	○	○	○	○	○	○
Port thread	G	G					○	○	○	○	○	○
Option	Polyolefin with bellows	J						x	◎	○	◎	◎
Option	Silicone rubber with bellows	L							◎	○	◎	◎
Option	Piston rod material stainless steel	M								○	◎	◎
Option	Specify piston rod end form	N									○	○
Option	Boss cutoff	V										◎
Option	Brake section with cover	U										
Accessory	Cylinder switch	Listed separately	◎	◎			◎	◎	◎	○	◎	◎
Accessory	Rod eye	I	◎	◎			◎	◎	◎	○	◎	◎
Accessory	Rod clevis	Y	◎	◎			◎	◎	◎	○	◎	◎
Accessory	B2 bracket	B2	◎	◎			◎	◎	◎	○	◎	◎

[Example of model No.]

JSK2 - V - LB - 20 ( ) - 50 - 1 - T0H - D - J I

- JSK2: Model No.
- V: Variation
  * List in order from left to right in the above table.
- LB: A Mounting
- 20: B Bore size
- ( ): C Port thread
- 50: D Stroke
- 1: E Valve voltage
- T0H: F Switch model No.
- D: G Switch quantity
- J: H Option
- I: I Accessory
  * List in order from left to right in the above table.

Model No.: Brake cylinder

● Variation : With valve
Ⓐ Mounting : Axial foot
Ⓑ Bore size : ø20 mm
Ⓒ Port thread : Rc thread
Ⓓ Stroke : 50 mm
Ⓔ Valve voltage : 100 VAC
Ⓕ Switch model No. : Reed T0H switch, lead wire 1 m
Ⓖ Switch quantity : 2
Ⓗ Option : Bellows max. ambient temperature 100°C
Ⓘ Accessory : Rod eye

MEMO

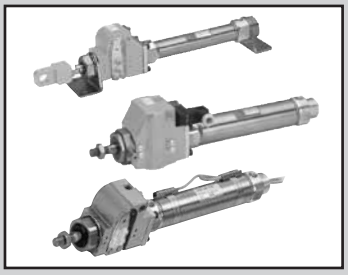

Brake cylinder Small bore size/swaging
Double acting/double acting/with valve for brake

JSK2/JSK2-V Series

● Bore size: ø20/ø25/ø32/ø40

JIS symbol ● Double acting

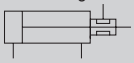

RoHS CAD

Specifications

Item		JSK2				JSK2-V			
Bore size mm		ø20	ø25	ø32	ø40	ø20	ø25	ø32	ø40
Actuation		Double acting				Double acting/with valve			
Working fluid		Compressed air							
Max. working pressure MPa		1.0 (≈150 psi, 10 bar)				0.6 (≈87 psi, 6 bar)			
Min. working pressure MPa		0.35 (≈51 psi, 3.5 bar)				0.35 (≈51 psi, 3.5 bar)			
Proof pressure MPa		1.6 (≈230 psi, 16 bar)							
Ambient temperature °C		-10 (14°F) to 60 (140°F) (no freezing)				-10 (14°F) to 50 (122°F) (no freezing)			
Port size	Brake section	M5	Rc1/8			M5	Rc1/8		
	Cylinder port	Rc1/8				Rc1/8			
Stroke tolerance mm		$^{+2.0}_{0}$(to 200), $^{+2.4}_{0}$(200 to)							
Working piston speed mm/s		50 to 500							
Cushion		Rubber cushion							
Lubrication		Not required (use turbine oil class 1 ISO VG32 if necessary for lubrication)							
Holding force N		186	431	431	765	186	431	431	765
Allowable absorbed energy J		0.166	0.308	0.424	0.639	0.166	0.308	0.424	0.639

Electrical specification for brake valve

Item	JSK2-V-VALVE-KIT- Voltage		
Rated voltage (V)	100 AC(50/60 Hz)	200 AC(50/60 Hz)	24 DC
Starting current (A)	0.056/0.044	0.034/0.026	0.075
Holding current (A)	0.028/0.022	0.017/0.013	
Power consumption (W)	1.8/1.4	2.1/1.6	1.8
Voltage fluctuation range	±10%		
Thermal class	Class B molded coil		

●*1 : 100/200 VAC coil is available for 110/220 VAC (60 Hz).
●*2 : Refer to “Pneumatic Valves (CB-023SA)” for details on valves (P5136 Series).

Stroke

Bore size (mm)	Standard stroke (mm)	Max. stroke (mm)		Min. stroke (mm)	
		Without bellows	With bellows	Without bellows	With bellows
ø20	25/50/75/100/125/150 175/200/250/300	700	600	5	5
ø25					
ø30					
ø40					

The min. stroke varies depending on the switch mounting method. Refer to the following table.

Min. stroke with switch

(Unit: mm)

Switch quantity	1					2					3				
	Proximity			Reed		Proximity			Reed		Proximity			Reed	
Bore size (mm)	T2,T3	T1,T*Y	T*W	T0,T5	T8	T2,T3	T1,T*Y	T*W	T0,T5	T8	T2,T3	T1,T*Y	T*W	T0,T5	T8
ø20	10					25	35	30	25	35	50	55	55	50	55
ø25	10					25	35	30	25	35	50	55	55	50	55
ø32	10					25	35	30	25	35	50	55	55	50	55
ø40	10					25	35	30	25	35	50	55	55	50	55

*1: Up to 3 switches can be mounted.

LCM
LCR
LCG
LCW
LCX
STM
STG
STS/STL
STR2
UCA2
ULK*
JSK/M2
JSG
JSC3/JSC4
USSD
UFCD
USC
UB
JSB3
LMB
LML
HCM
HCA
LBC
CAC4
UCAC2
CAC-N
UCAC-N
RCS2
RCC2
PCC
SHC
MCP
GLC
MFC
BBS
RRC
GRC
RV3*
NHS
HRL
LN
Hand
Chuk
MecHnd/Chuk
ShkAbs
FJ
FK
SpdContr
Ending

Switch specifications

● 1-color/2-color LED

Item	Proximity 2-wire	Proximity 2-wire			Proximity 3-wire				Reed 2-wire						
	T1H/T1V	T2H/T2V/ T2JH/T2JV	T2YH/ T2YV	T2WH/ T2WV	T3H/ T3V	T3PH/ T3PV	T3YH/ T3YV	T3WH/ T3WV	T0H/T0V		T5H/T5V		T8H/T8V		
Applications	Programmable controller For relay, compact solenoid valve	Dedicated for programmable controller			For programmable controller, relay				For programmable controller, relay		Programmable controller, relay IC circuit (no indicator lamp), for serial connection		For programmable controller, relay		
Output method	-				NPN output	PNP output	NPN output	NPN output	-						
Pwr. supp. V.	-				10 to 28 VDC				-						
Load voltage	85 to 265 VAC	10 to 30 VDC		24 VDC ±10%	30 VDC or less				12/24 VDC	100/110 VAC	5/12/24 VDC	100/110 VAC	12/24 VDC	110 VAC	220 VAC
Load current	5 to 100mA	5 to 20 mA (*3)			100 mA or less		50 mA or less		5 to 50mA	7 to 20mA	50 mA or less	20 mA or less	5 to 50mA	7 to 20mA	7 to 10mA
Indicator lamp	LED (Lit when ON)	LED (Lit when ON)	Red/green LED (Lit when ON)	Red/green LED (Lit when ON)	LED (Lit when ON)	Yellow LED (Lit when ON)	Red/green LED (Lit when ON)	Red/green LED (Lit when ON)	LED (Lit when ON)		No indicator lamp		LED (Lit when ON)		
Leakage current	1 mA or less with 100 VAC, 2 mA or less with 200 VAC	1 mA or less			10 μA or less				0mA						
Weight g	1 m: 33 3 m: 87 5 m: 142	1 m: 18 3 m: 49 5 m: 80	1 m: 33 3 m: 87 5 m: 142	1 m: 18 3 m: 49 5 m: 80	1 m: 18 3 m: 49 5 m: 80		1 m: 33 3 m: 87 5 m: 142	1 m: 18 3 m: 49 5 m: 80	1 m: 18 3 m: 49 5 m: 80				1 m: 33 3 m: 87 5 m: 142		

*1 : Refer to Ending Page 1 for detailed switch specifications and dimensions.
*2 : Switches other than the above models, such as switches with connectors, are also available. Refer to Ending Page 1.
*3 : The max. load current is 20 mA at 25°C. The current is lower than 20 mA if the operating ambient temperature around the switch is higher than 25°C. (5 to 10 mA at 60°C)

Cylinder weight

● JSK2

(Unit: kg)

Item/mounting / Bore size (mm)	Product weight when stroke (S) = 0 mm						Switch weight	Switch rail + band weight	Additional weight per S = 10 mm
	Basic (00)	Axial foot (LB)	Flange (FA)	Clevis (CA)	Clevis (CC)	Trunnion (TA)			
ø20	0.67	0.82	0.73	0.82	0.68	0.72	Refer to the weightin theUse this as a reference.	0.005	0.01
ø25	1.18	1.44	1.33	1.42	1.18	1.28		0.005	0.01
ø32	1.22	1.48	1.37	1.46	1.22	1.32		0.009	0.02
ø40	1.91	2.17	2.06	2.15	1.93	2.07		0.009	0.02

● JSK2-V (with valve)

(Unit: kg)

Item/mounting / Bore size (mm)	Product weight when stroke (S) = 0 mm						Switch weight	Switch rail + band weight	Additional weight per S = 10 mm
	Basic (00)	Axial foot (LB)	Flange (FA)	Clevis (CA)	Clevis (CC)	Trunnion (TA)			
ø20	0.72	0.87	0.78	0.87	0.73	0.77	Refer to the weightin theUse this as a reference.	0.005	0.01
ø25	1.23	1.49	1.38	1.47	1.23	1.33		0.005	0.01
ø32	1.27	1.53	1.42	1.51	1.27	1.37		0.009	0.02
ø40	1.96	2.22	2.11	2.20	1.98	2.12		0.009	0.02

(Example) JSK2-V-LB-20-100-2-TOH-D

Product weight when S = 0 mm..... 0.87 kg
Additional weight when S = 100 mm..... $0.01 \times \frac{100}{10} = 0.1$kg
Weight of 2 switches..... 0.018×2=0.036kg
Weight of switch rail + 2 bands..... 0.005×2=0.010kg
Product weight ..... 0.87kg+0.1kg+0.036kg+0.010kg=1.016kg

Theoretical thrust table

(Unit: N)

Bore size (mm)	Operating direction	Working pressure MPa						
		0.4	0.5	0.6	0.7	0.8	0.9	1.0
ø20	Push	1.26×10^2	1.57×10^2	1.88×10^2	2.20×10^2	2.51×10^2	2.83×10^2	3.14×10^2
	Pull	94.2	1.18×10^2	1.41×10^2	1.65×10^2	1.88×10^2	2.12×10^2	2.36×10^2
ø25	Push	1.96×10^2	2.45×10^2	2.95×10^2	3.44×10^2	3.93×10^2	4.42×10^2	4.91×10^2
	Pull	1.51×10^2	1.89×10^2	2.27×10^2	2.64×10^2	3.02×10^2	3.40×10^2	3.78×10^2
ø32	Push	3.22×10^2	4.02×10^2	4.83×10^2	5.63×10^2	6.43×10^2	7.24×10^2	8.04×10^2
	Pull	2.76×10^2	3.46×10^2	4.15×10^2	4.84×10^2	5.53×10^2	6.22×10^2	6.91×10^2
ø40	Push	5.03×10^2	6.28×10^2	7.54×10^2	8.80×10^2	1.01×10^3	1.13×10^3	1.26×10^3
	Pull	4.41×10^2	5.51×10^2	6.62×10^2	7.72×10^2	8.82×10^2	9.92×10^2	1.10×10^3

LCM
LCR
LCG
LCW
LCX
STM
STG
STS/STL
STR2
UCA2
ULK*
JSK/M2
JSG
JSC3/JSC4
USSD
UFCD
USC
UB
JSB3
LMB
LML
HCM
HCA
LBC
CAC4
UCAC2
CAC-N
UCAC-N
RCS2
RCC2
PCC
SHC
MCP
GLC
MFC
BBS
RRC
GRC
RV3*
NHS
HRL
LN
Hand
Chuk
MecHnd/Chuk
ShkAbs
FJ
FK
SpdContr
Ending

How to order

● Without valve

Without switch (built-in magnet for switch)

JSK2 - LB - 20 ( ) - 50 —— J I

With switch (built-in magnet for switch)

JSK2 - LB - 20 ( ) - 50 —— T0H - R - J I

● With valve for brake

Without switch (built-in magnet for switch)

JSK2-V - LB - 20 ( ) - 50 - 1 —— J I

With switch (built-in magnet for switch)

JSK2-V - LB - 20 ( ) - 50 - 1 - T0H - R - J I

Ⓐ Model No. *1
Ⓑ Mounting *2
Ⓒ Bore size
Ⓓ Port thread
Ⓔ Stroke
Ⓕ Valve voltage
Ⓖ Switch model No.
Ⓗ Switch quantity *6
Ⓘ Option *4 *7
Ⓙ Accessory *5

Code	Description	Ⓐ Model No. Double acting JSK2	Ⓐ Model No. With valve JSK2-V
Ⓑ Mounting			
00	Basic	●	●
LB	Axial foot	●	●
FA	Rod side flange	●	●
CA	Eye bracket	●	●
CC	Eye bracket integrated	●	●
TA	Rod side trunnion	●	●
TB	Head side trunnion	●	●
Ⓒ Bore size (mm)			
20	ø20	●	●
25	ø25	●	●
32	ø32	●	●
40	ø40	●	●
Ⓓ Port thread			
Blank	Rc thread		
NN	NPT thread (ø25 and over) (made-to-order product)		
GN	G thread (ø25 and over) (made-to-order product)		

Ⓔ Stroke (mm)

Bore size	Stroke *3	Custom stroke
ø20	5 to 700	In 1 mm increments
ø25	5 to 700	
ø32	5 to 700	
ø40	5 to 700	

Code	Description		
Ⓕ Valve voltage			
1	100 VAC (50/60 Hz)		●
2	200 VAC (50/60 Hz)		●
3	24 VDC		●

Ⓖ Switch model No.

Straight lead wire	L-shaped lead wire	Contact	Voltage AC	Voltage DC	Indicator	Lead wire
T0H*	T0V*	Reed	●	●	1-color LED	2-wire
T5H*	T5V*	Reed	●	●	No indicator lamp	2-wire
T8H*	T8V*	Reed	●	●	1-color LED	2-wire
T1H*	T1V*	Proximity	●		1-color LED	2-wire
T2H*	T2V*	Proximity		●	1-color LED	2-wire
T3H*	T3V*	Proximity		●		3-wire
T3PH*	T3PV*	Proximity		●	1-color LED	3-wire
T2WH*	T2WV*	Proximity		●	2-color LED	2-wire
T2YH*	T2YV*	Proximity		●		
T3WH*	T3WV*	Proximity		●		3-wire
T3YH*	T3YV*	Proximity		●		
T2JH*	T2JV*	Proximity		●	Off-delay	2-wire

Code	Description		
*** Lead wire length**			
Blank	1 m (standard)	●	●
3	3 m (option)	●	●
5	5 m (option)	●	●
Ⓗ Switch quantity			
R	1 on rod side	●	●
H	1 on head side	●	●
D	2	●	●
T	3	●	●

Ⓘ Option

		Max. ambient temperature	Instantaneous max. temp		
J	Bellows	100°C	200°C	●	●
L	Bellows	250°C	400°C	●	●
M	Piston rod material (stainless steel)			●	●
V	Boss cutoff			●	●
U	Brake section with cover			●	●

Code	Description		
Ⓙ Accessory			
I	Rod eye	●	●
Y	Rod clevis (pin, washer, split pin attached)	●	●
B2	Clevis bracket (pin, snap ring attached)	●	●

⚠ Precautions for model No. selection

*1 : Low hydraulic can also be supplied as made-to-order product
Model numbers are JSK2-H and JSK2-VH.
*2 : For a TA mounting, the brake section with cover and the clevis bracket cannot be selected together since they may interfere with each other.
*3 : For the min. stroke with switch and the max. and min. strokes with bellows, refer to page 706.
*4 : The instantaneous max. temperature is the temperature when sparks, cutting chips, etc., instantaneously contact the bellows.
*5 : "I" and "Y" cannot be selected together.
*6 : Up to three switches can be installed. If four or more switches are required, switch mounting brackets for the extra switches must be prepared separately.
*7 : For mounting TA (rod side trunnion), the option U (brake section with cover) cannot be selected.

[Example of model No.]

JSK2-V-LB-20-50-1- T0H-R-JI

Model: Brake cylinder with valve

Ⓐ Model No. : With valve
Ⓑ Mounting : Axial foot
Ⓒ Bore size : ø20 mm
Ⓓ Port thread : Rc thread
Ⓔ Stroke : 50 mm
Ⓕ Valve voltage : 100 VAC
Ⓖ Switch model No. : Reed switch T0H, lead wire 1 m
Ⓗ Switch quantity : 1 on rod side
Ⓘ Option : Bellows
Max. ambient temperature 100°C, instantaneous max. temperature 200°C
Ⓙ Accessory : Rod eye

How to order switch

● Switch body + mounting bracket set

JSK2 - T0H - 20

- 20 → Bore size (Item Ⓒ on page 708)
- T0H → Switch model No. (Item Ⓖ on page 708)

● Switch body only

SW - T0H

- T0H → Switch model No. (Item Ⓖ on page 708)

● Mounting bracket set

JSK2 - T - 20

- 20 → Bore size (Item Ⓒ on page 708)
- T → Mounting bracket

How to order brake valve

JSK2-V - VALVE-KIT - 1

❶ Valve voltage

Code	Description
1	100 VAC (50/60 Hz)
2	200 VAC (50/60 Hz)
3	24 VDC

How to order mounting bracket

Bore size (mm) / Mounting bracket	ø20	ø25	ø32	ø40
Basic (00) *3	M1-00-20	M1-00-30	M1-00-30	M1-00-30
Axial foot (LB)	M1-LB-20	M1-LB-30	M1-LB-30	M1-LB-30
Flange (FA)	M1-FA-20	M1-FA-30	M1-FA-30	M1-FA-30
Eye bracket (CA)	M1-CA-20	M1-CA-30	M1-CA-30	M1-CA-30
Trunnion (TA/TB)	M1-TA-20	M1-TA-30	M1-TA-30	M1-TA-40

*1 : As for mounting brackets, the axial foot and flange include mounting nuts and toothed washers, and the trunnion includes mounting nuts.
2 : For axial foot, 2 sets of the above “M1-LB-” are required.
*3 : Mounting nut, toothed washer only. Although 1 set is attached with the basic of the product (00), use this when needed.

LCM
LCR
LCG
LCW
LCX
STM
STG
STS/STL
STR2
UCA2
ULK*
JSK/M2
JSG
JSC3/JSC4
USSD
UFCD
USC
UB
JSB3
LMB
LML
HCM
HCA
LBC
CAC4
UCAC2
CAC-N
UCAC-N
RCS2
RCC2
PCC
SHC
MCP
GLC
MFC
BBS
RRC
GRC
RV3*
NHS
HRL
LN
Hand
Chuk
MecHnd/Chuk
ShkAbs
FJ
FK
SpdContr
Ending

Material of mounting bracket

Mounting	Material	Remarks
LB	Steel	Zinc chromate
FA	Steel	Zinc chromate
TA/TB	Steel	Zinc chromate
CA	Steel	Zinc chromate

Note: Mounting bracket will be shipped with the product.
However, if the product is supplied with bellows and the mounting bracket is LB, FA, or TA, it will be shipped assembled.

Internal structure and parts list

- JSK2-V (with valve and switch)
- JSK2 (with switch)

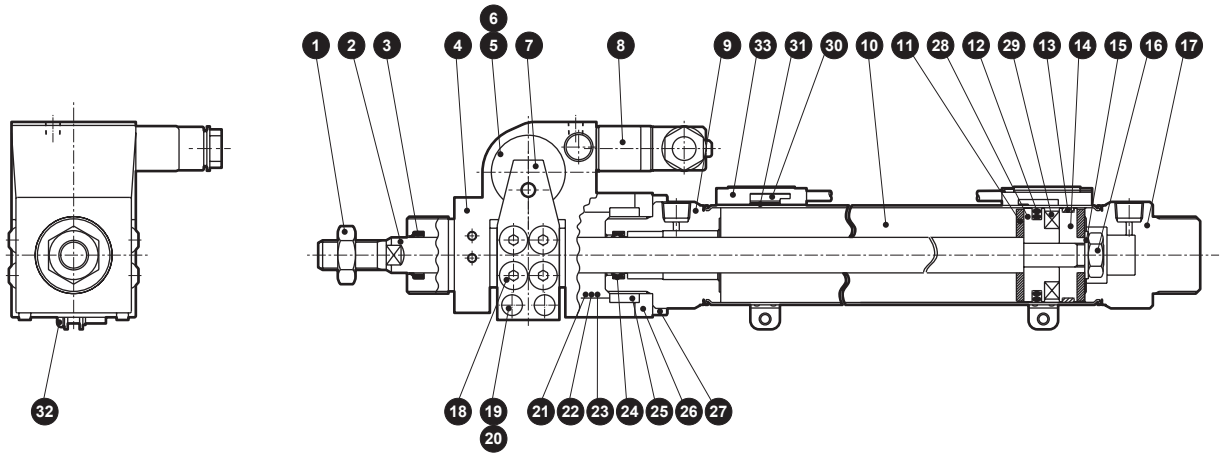

Note: This product is a caulked and cannot be disassembled.

Cannot be disassembled

Parts list

No.	Part name	Material	Remarks	No.	Part name	Material	Remarks
1	Rod nut	Steel	Zinc chromate	18	Hex socket screw	Steel	Black finish treatment
2	Piston rod	ø20/ø25 stainless steel ø32/ø40 steel	Industrial chrome plating	19	Hex socket screw	Steel	Black finish treatment
				20	Brake spring	Steel	Black finish treatment
3	Scraper	Nitrile rubber		21	Brake shoe metal	Cast iron	
4	Brake body	Cast iron	Zinc chromate	22	Bush	Dry bearing	
5	Brake piston	Copper alloy casting		23	Ring	Steel	
6	Piston packing	Nitrile rubber		24	Rod packing	Nitrile rubber	
7	Lever	Steel	Zinc chromate	25	Fixed ring	Steel	Zinc chromate
8	Valve for brake release	---	P5136MO	26	Square flange	Steel	Zinc chromate
9	Rod cover	Aluminum alloy		27	Hex socket screw	Steel	Black finish treatment
10	Cylinder tube	Stainless steel		28	Piston A	Aluminum alloy	
11	Cushion rubber	Urethane rubber		29	Magnet	Plastic	
12	Piston packing	Nitrile rubber		With switch			
13	Wear ring	Acetal resin		30	Switch body	---	
14	Piston B	Aluminum alloy		31	Band	Stainless steel	
15	Spacer	Steel	Zinc chromate	32	Pan head machine screw	Stainless steel	
16	Hexagon nut	Steel	Zinc chromate	33	Switch rail	Stainless steel	
17	Head cover	Aluminum alloy					

Dimensions

● Basic (00)

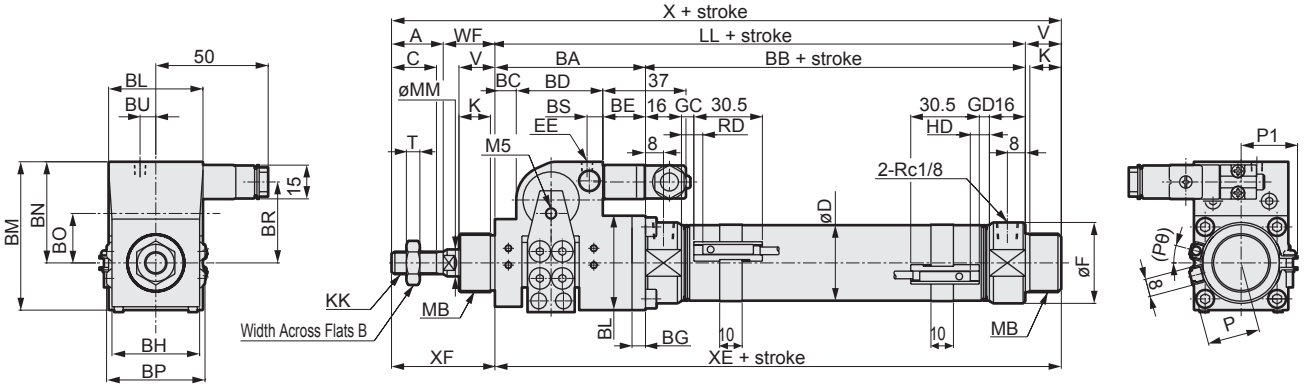

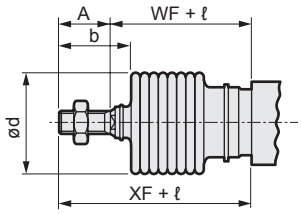

[With bellows]

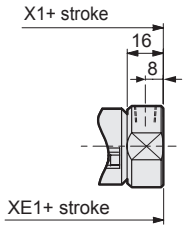

[Boss cutoff type]

RD: Rod side max. sensitivity position
HD: Head side max. sensitivity position
1 : Refer to page 719 for HD, RD and protruding dimensions of T, T8*, and 2-color LED switches.
*2 : The size of the exhaust port of brake section is the same as that of EE.
*3 : ℓ dimensions should be rounded up to the nearest whole number.
*4 : For the dimensions of the accessories, refer to page 731.

Code	Basic (00) basic dimensions																		
Bore size (mm)	A	B	BA	BB	BC	BD	BE	BG	BH	BL	BM	BN	BO	BP	BR	BS	BU	C	D
ø20	20	13	58	66	9	30	19	5	29	34	55	38	19	38	29	4	3.8	18	21.4
ø25	23	17	67	69	9.5	38.5	19	6	39	42	66	45	22	43.8	34.5	7	7	20	26.4
ø32	23	17	67	69	9.5	38.5	19	6	39	42	66	45	22	43.8	34.5	7	7	20	33.6
ø40	25	19	74	73	8	48	18	8	50	50	80.5	55.5	25	52	39.5	7	7	22	41.6

Code															With switch (T0, T5, T2, T3)			
Bore size (mm)	EE	F	K	KK	LL	MB	MM	T	V	WF	X	XE	XF	GC	GD	RD	HD
ø20	M5	28	12	M 8 x 1.0	124	M 18 x 1.5	10	5	14	24	182	138	44	4.0	3.0	8.0	7.0
ø25	Rc1/8	32	14	M 10 x 1.25	136	M 26 x 1.5	12	6	16	23	198	152	46	5.5	4.5	9.5	8.5
ø32	Rc1/8	36	14	M 10 x 1.25	136	M 26 x 1.5	12	6	16	23	198	152	46	5.5	4.5	9.5	8.5
ø40	Rc1/8	45	14	M 12 x 1.5	147	M 26 x 1.5	14	7	16	23	211	163	48	7.5	6.5	11.5	10.5

Code	With switch (T2W, T3W)							With bellows			Boss cutoff type	
Bore size (mm)	GC	GD	RD	HD	P	P1	(Pθ)°	b	d	ℓ	X1	XE1
ø20	6.0	5.0	10.0	9.0	17.3	19.5	22	30	30	(Stroke/3) + 6	168	124
ø25	7.5	6.5	11.5	10.5	19.8	22.0	18	32	46	(Stroke/3.25) + 7	182	136
ø32	7.5	6.5	11.5	10.5	24.3	25.5	15	32	46	(Stroke/3.25) + 7	182	136
ø40	9.5	8.5	13.5	12.5	28.3	29.5	12	34	46	(Stroke/3.25) + 7	195	147

LCM
LCR
LCG
LCW
LCX
STM
STG
STS/STL
STR2
UCA2
ULK*
JSK/M2
JSG
JSC3/JSC4
USSD
UFCD
USC
UB
JSB3
LMB
LML
HCM
HCA
LBC
CAC4
UCAC2
CAC-N
UCAC-N
RCS2
RCC2
PCC
SHC
MCP
GLC
MFC
BBS
RRC
GRC
RV3*
NHS
HRL
LN
Hand
Chuk
MecHnd/Chuk
ShkAbs
FJ
FK
SpdContr
Ending

Dimensions

● Axial foot (LB)

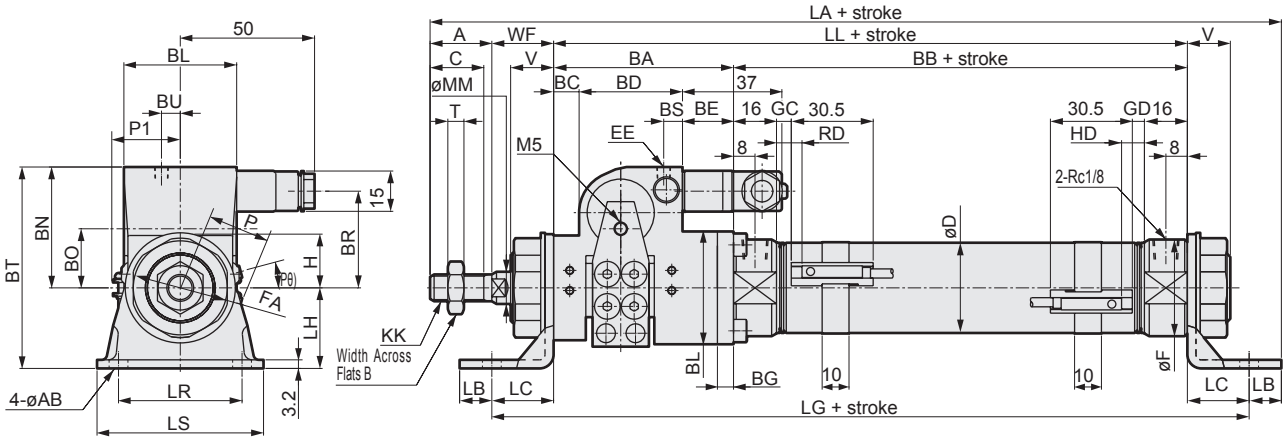

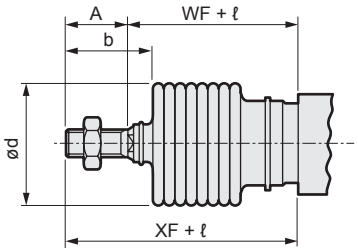

[With bellows]

1 : Refer to page 719 for HD, RD and protruding dimensions of T, T8*, and 2-color LED switches.
*2 : The size of the exhaust port of brake section is the same as that of EE.
*3 : ℓ dimensions should be rounded up to the nearest whole number.
*4 : For the dimensions of the accessories, refer to page 731.

Code	Axial foot (LB) basic dimensions																		
Bore size (mm)	A	AB	B	BA	BB	BC	BD	BE	BG	BL	BT	BN	BO	BR	BS	BU	C	D	EE
ø20	20	6	13	58	66	9	30	19	5	34	63	38	19	29	4	3.8	18	21.4	M5
ø25	23	7	17	67	69	9.5	38.5	19	6	42	75	45	22	34.5	7	7	20	26.4	Rc1/8
ø32	23	7	17	67	69	9.5	38.5	19	6	42	75	45	22	34.5	7	7	20	33.6	Rc1/8
ø40	25	7	19	74	73	8	48	18	8	50	85.5	55.5	25	39.5	7	7	22	41.6	Rc1/8

Code										Mounting dimensions							With switch (T0, T5, T2, T3)		
Bore size (mm)	F	FA	H	KK	LL	MM	T	V	WF	LA	LB	LC	LG	LH	LR	LS	GC	GD	RD
ø20	28	26	15	M 8 x 1.0	124	10	5	14	24	196	10	18	160	25	30	44	4.0	3.0	8.0
ø25	32	35	20	M 10 x 1.25	136	12	6	16	23	217	12	23	182	30	46	62	5.5	4.5	9.5
ø32	36	35	20	M 10 x 1.25	136	12	6	16	23	217	12	23	182	30	46	62	5.5	4.5	9.5
ø40	45	35	20	M 12 x 1.5	147	14	7	16	23	230	12	23	193	30	46	62	7.5	6.5	11.5

Code		With switch (T2W, T3W)							With bellows			
Bore size (mm)	HD	GC	GD	RD	HD	P	P1	(Pθ°)	XF	b	d	ℓ
ø20	7.0	6.0	5.0	10.0	9.0	17.3	19.5	22	44	30	30	(Stroke/3) + 6
ø25	8.5	7.5	6.5	11.5	10.5	19.8	22.0	18	46	32	46	(Stroke/3.25) + 7
ø32	8.5	7.5	6.5	11.5	10.5	24.3	25.5	15	46	32	46	(Stroke/3.25) + 7
ø40	10.5	9.5	8.5	13.5	12.5	28.3	29.5	12	48	34	46	(Stroke/3.25) + 7

Dimensions

● Rod side flange (FA)

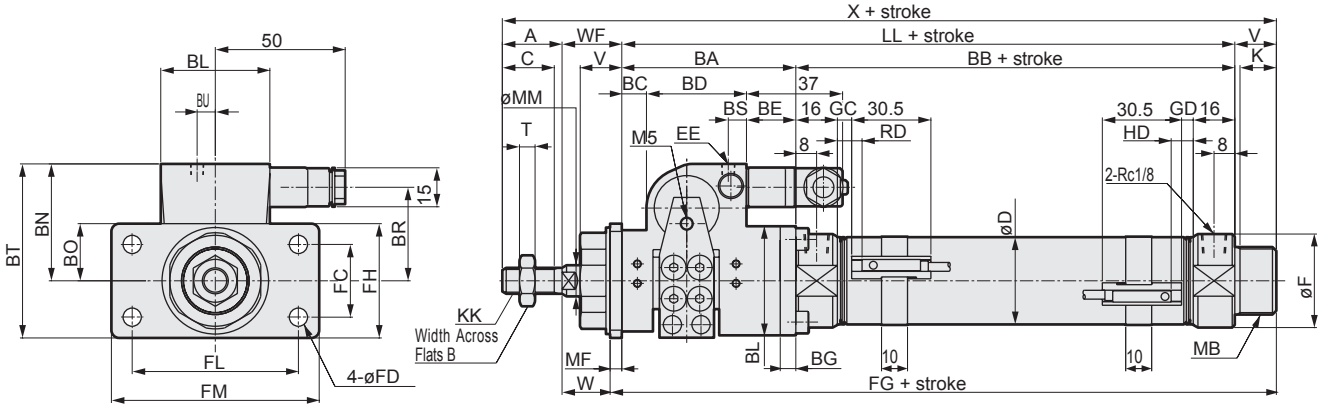

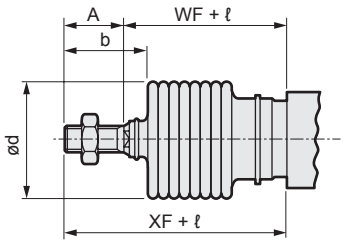

[With bellows]

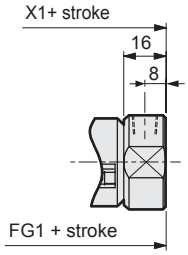

[Boss cutoff type]

1 : Refer to page 719 for HD, RD and protruding dimensions of T, T8*, and 2-color LED switches.
*2 : The size of the exhaust port of brake section is the same as that of EE.
*3 : ℓ dimensions should be rounded up to the nearest whole number.
*4 : For the dimensions of the accessories, refer to page 731.

Code	Rod side flange (FA) basic dimensions																				
Bore size (mm)	A	B	BA	BB	BC	BD	BE	BG	BT	BL	BN	BO	BR	BS	BU	C	D	EE	F	K	KK
ø20	20	13	58	66	9	30	19	5	55	34	38	19	29	4	3.8	18	21.4	M5	28	12	M 8 x 1.0
ø25	23	17	67	69	9.5	38.5	19	6	67	42	45	22	34.5	7	7	20	26.4	Rc1/8	32	14	M 10 x 1.25
ø32	23	17	67	69	9.5	38.5	19	6	67	42	45	22	34.5	7	7	20	33.6	Rc1/8	36	14	M 10 x 1.25
ø40	25	19	74	73	8	48	18	8	77.5	50	55.5	25	39.5	7	7	22	41.6	Rc1/8	45	14	M 12 x 1.5

Code										Mounting dimensions						With switch (T0, T5, T2, T3)			
Bore size (mm)	LL	MB	MF	MM	T	V	W	WF	X	FC	FD	FG	FH	FL	FM	GC	GD	RD	HD
ø20	124	M 18 x 1.5	3.2	10	5	14	20.8	24	182	20	6	141.2	34	40	54	4.0	3.0	8.0	7.0
ø25	136	M 26 x 1.5	4.5	12	6	16	18.5	23	198	28	7	156.5	44	64	80	5.5	4.5	9.5	8.5
ø32	136	M 26 x 1.5	4.5	12	6	16	18.5	23	198	28	7	156.5	44	64	80	5.5	4.5	9.5	8.5
ø40	147	M 26 x 1.5	4.5	14	7	16	18.5	23	211	28	7	167.5	44	64	80	7.5	6.5	11.5	10.5

Code	With switch (T2W, T3W)				With bellows				Boss cutoff type	
Bore size (mm)	GC	GD	RD	HD	XF	b	d	ℓ	X1	FG1
ø20	6.0	5.0	10.0	9.0	44	30	30	(Stroke/3) + 6	168	127.2
ø25	7.5	6.5	11.5	10.5	46	32	46	(Stroke/3.25) + 7	182	140.5
ø32	7.5	6.5	11.5	10.5	46	32	46	(Stroke/3.25) + 7	182	140.5
ø40	9.5	8.5	13.5	12.5	48	34	46	(Stroke/3.25) + 7	195	151.5

LCM
LCR
LCG
LCW
LCX
STM
STG
STS/STL
STR2
UCA2
ULK*
JSK/M2
JSG
JSC3/JSC4
USSD
UFCD
USC
UB
JSB3
LMB
LML
HCM
HCA
LBC
CAC4
UCAC2
CAC-N
UCAC-N
RCS2
RCC2
PCC
SHC
MCP
GLC
MFC
BBS
RRC
GRC
RV3*
NHS
HRL
LN
Hand
Chuk
MecHnd/Chuk
ShkAbs
FJ
FK
SpdContr
Ending

Dimensions

● Eye bracket (CA)

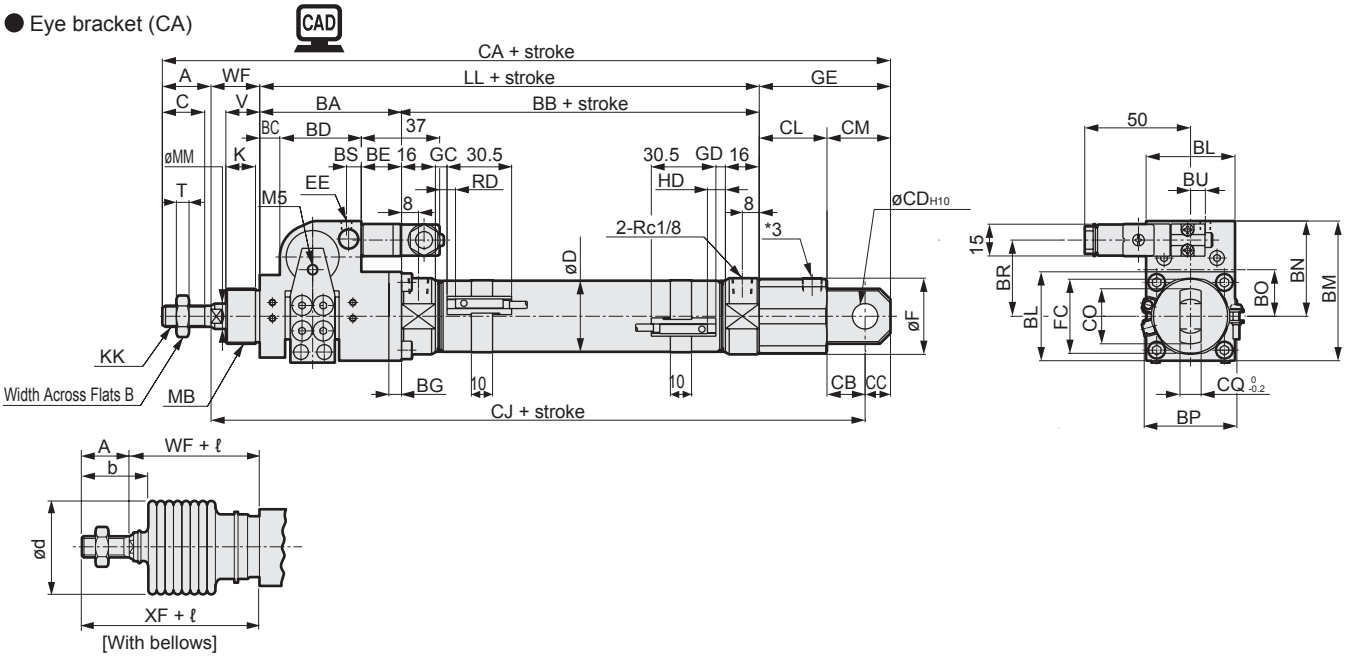

● Eye bracket (CA) with bracket (option)

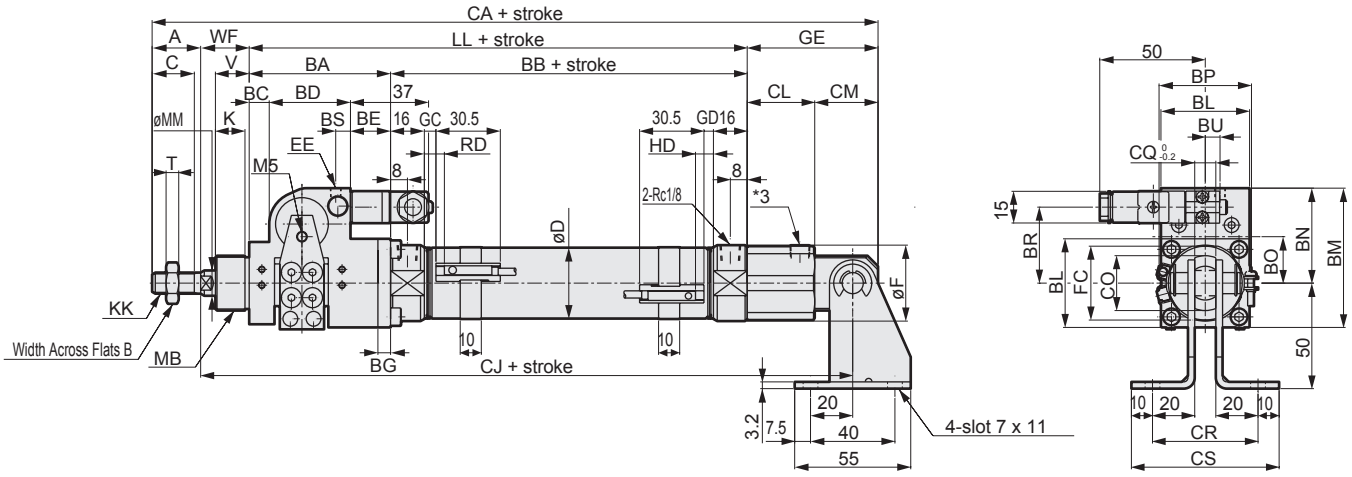

1 : Refer to page 719 for HD, RD and protruding dimensions of T, T8*, and 2-color LED switches.
*2 : The size of the exhaust port of brake section is the same as that of EE.
*3 : It is not a piping port.
*4 : ℓ dimensions should be rounded up to the nearest whole number.
*5 : For the dimensions of the accessories, refer to page 731.

Code	Eye bracket (CA) basic dimensions																					
Bore size (mm)	A	B	BA	BB	BC	BD	BE	BG	BL	BM	BN	BO	BP	BR	BS	BU	C	D	EE	F	FC	GE
ø20	20	13	58	66	9	30	19	5	34	55	38	19	38	29	4	3.8	18	21.4	M5	28	26	55
ø25	23	17	67	69	9.5	38.5	19	6	42	66	45	22	43.8	34.5	7	7	20	26.4	Rc1/8	32	35	62
ø32	23	17	67	69	9.5	38.5	19	6	42	66	45	22	43.8	34.5	7	7	20	33.6	Rc1/8	36	35	62
ø40	25	19	73	73	8	48	18	8	50	80.5	55.5	25	52	39.5	7	7	22	41.6	Rc1/8	45	35	62

Code									Mounting dimensions										
Bore size (mm)	K	KK	LL	MB	MM	T	V	WF	CA	CB	CC	CD	CJ	CL	CM	CO	CQ	CR	CS
ø20	12	M 8 x 1.0	124	M 18 x 1.5	10	5	14	24	223	14	10	10	193	31	24	22	8	48	68
ø25	14	M 10 x 1.25	135	M 26 x 1.5	12	6	16	23	244	18	12	12	209	32	30	26	10	50	70
ø32	14	M 10 x 1.25	136	M 26 x 1.5	12	6	16	23	244	18	12	12	209	32	30	26	10	50	70
ø40	14	M 12 x 1.5	147	M 26 x 1.5	14	7	16	23	257	18	12	12	220	32	30	26	10	50	70

Code	With switch (T0, T5, T2, T3)				With switch (T2W, T3W)				With bellows			
Bore size (mm)	GC	GD	RD	HD	GC	GD	RD	HD	XF	b	d	ℓ
ø20	4.0	3.0	8.0	7.0	6.0	5.0	10.0	9.0	44	30	30	(Stroke/3) + 6
ø25	5.5	4.5	9.5	8.5	7.5	6.5	11.5	10.5	46	32	46	(Stroke/3.25) + 7
ø32	5.5	4.5	9.5	8.5	7.5	6.5	11.5	10.5	46	32	46	(Stroke/3.25) + 7
ø40	7.5	6.5	11.5	10.5	9.5	8.5	13.5	12.5	48	34	46	(Stroke/3.25) + 7

Dimensions

● Eye bracket integrated (CC) CAD

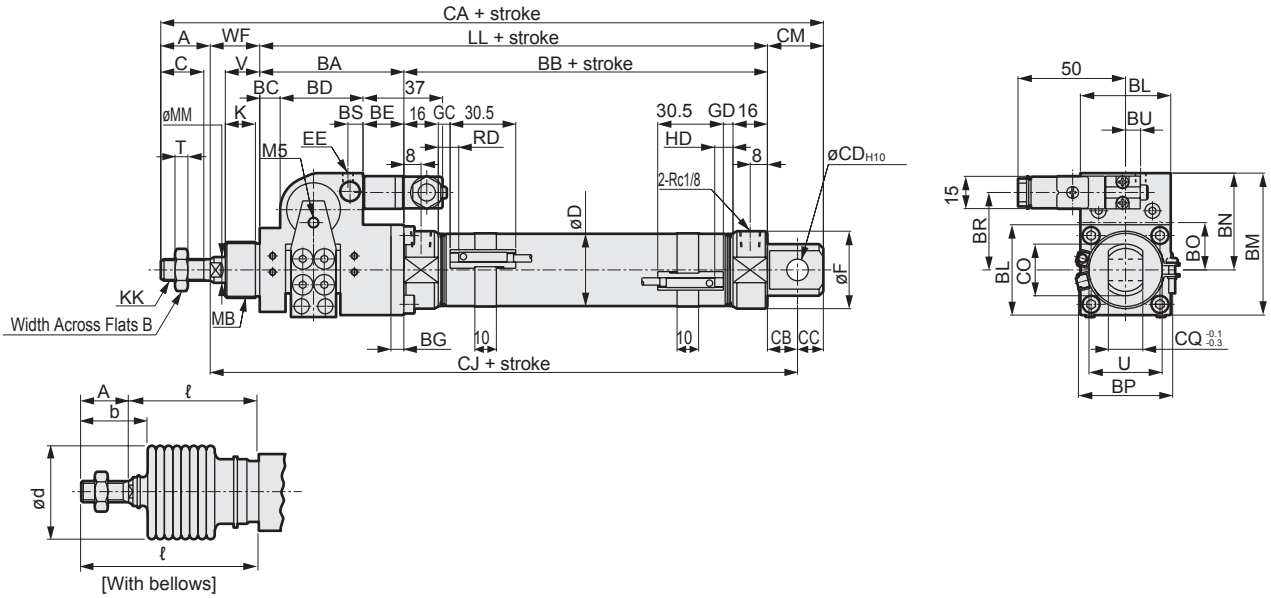

● Eye bracket integrated (CC) with bracket (option)

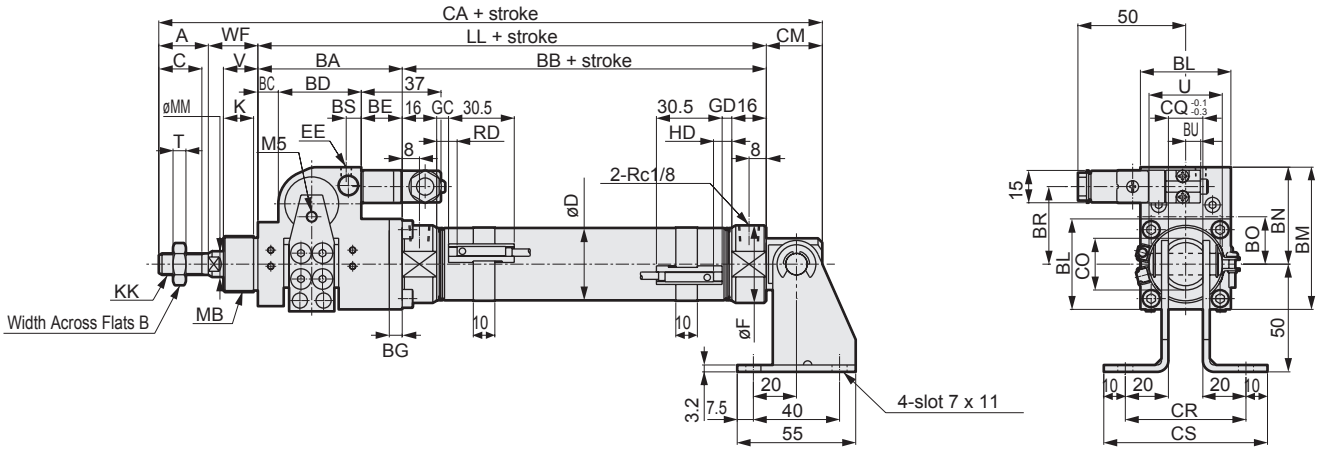

1 : Refer to page 719 for HD, RD and protruding dimensions of T, T8*, and 2-color LED switches.
*2 : The size of the exhaust port of brake section is the same as that of EE.
*3 : ℓ dimensions should be rounded up to the nearest whole number.
*4 : For the dimensions of the accessories, refer to page 731.

Code	Eye bracket integrated (CC) basic dimensions																			
Bore size (mm)	A	B	BA	BB	BC	BD	BE	BG	BL	BM	BN	BO	BP	BR	BS	BU	C	D	EE	F
ø20	20	13	58	66	9	30	19	5	34	55	38	19	38	29	4	3.8	18	21.4	M5	28
ø25	23	17	67	69	9.5	38.5	19	6	42	66	45	22	43.8	34.5	7	7	20	26.4	Rc1/8	32
ø32	23	17	67	69	9.5	38.5	19	6	42	66	45	22	43.8	34.5	7	7	20	33.6	Rc1/8	36
ø40	25	19	74	73	8	48	18	8	50	80.5	55.5	25	52	39.5	7	7	22	41.6	Rc1/8	45

Code										Mounting dimensions									
Bore size (mm)	K	KK	LL	MB	MM	T	U	V	WF	CA	CB	CC	CD	CJ	CM	CO	CQ	CR	CS
ø20	12	M 8 x 1.0	124	M 18 x 1.5	10	5	24	14	24	189	12	9	8	160	21	22	16	56	76
ø25	14	M 10 x 1.25	135	M 26 x 1.5	12	6	30	16	23	203	12	9	8	171	21	24	16	56	76
ø32	14	M 10 x 1.25	136	M 26 x 1.5	12	6	34	16	23	208	14	12	10	173	26	24	16	56	76
ø40	14	M 12 x 1.5	147	M 26 x 1.5	14	7	43	16	23	225	16	14	12	186	30	30	20	60	80

Code	With switch (T0, T5, T2, T3)				With switch (T2W, T3W)				With bellows			
Bore size (mm)	GC	GD	RD	HD	GC	GD	RD	HD	XF	b	d	ℓ
ø20	4.0	3.0	8.0	7.0	6.0	5.0	10.0	9.0	44	30	30	(Stroke/3) + 6
ø25	5.5	4.5	9.5	8.5	7.5	6.5	11.5	10.5	46	32	46	(Stroke/3.25) + 7
ø32	5.5	4.5	9.5	8.5	7.5	6.5	11.5	10.5	46	32	46	(Stroke/3.25) + 7
ø40	7.5	6.5	11.5	10.5	9.5	8.5	13.5	12.5	48	34	46	(Stroke/3.25) + 7

LCM
LCR
LCG
LCW
LCX
STM
STG
STS/STL
STR2
UCA2
ULK*
JSK/M2
JSG
JSC3/JSC4
USSD
UFCD
USC
UB
JSB3
LMB
LML
HCM
HCA
LBC
CAC4
UCAC2
CAC-N
UCAC-N
RCS2
RCC2
PCC
SHC
MCP
GLC
MFC
BBS
RRC
GRC
RV3*
NHS
HRL
LN
Hand
Chuk
MecHnd/Chuk
ShkAbs
FJ
FK
SpdContr
Ending

Dimensions

● Rod side trunnion (TA)

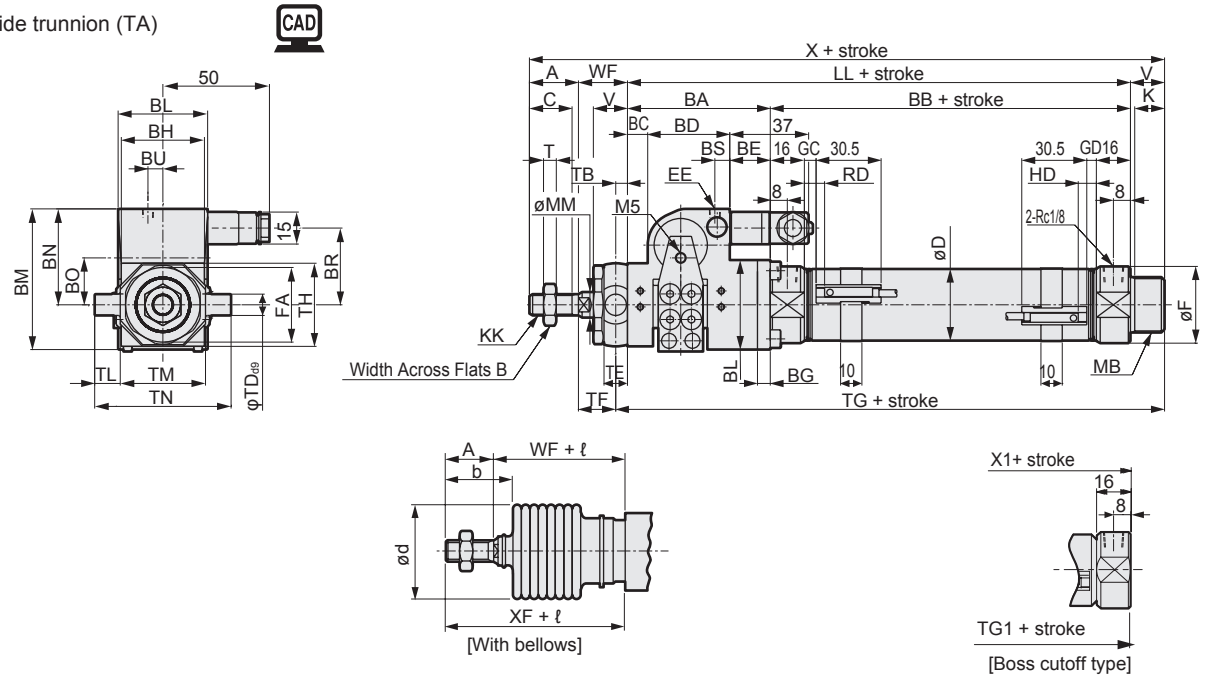

● Rod type trunnion (TA) with bracket (option)

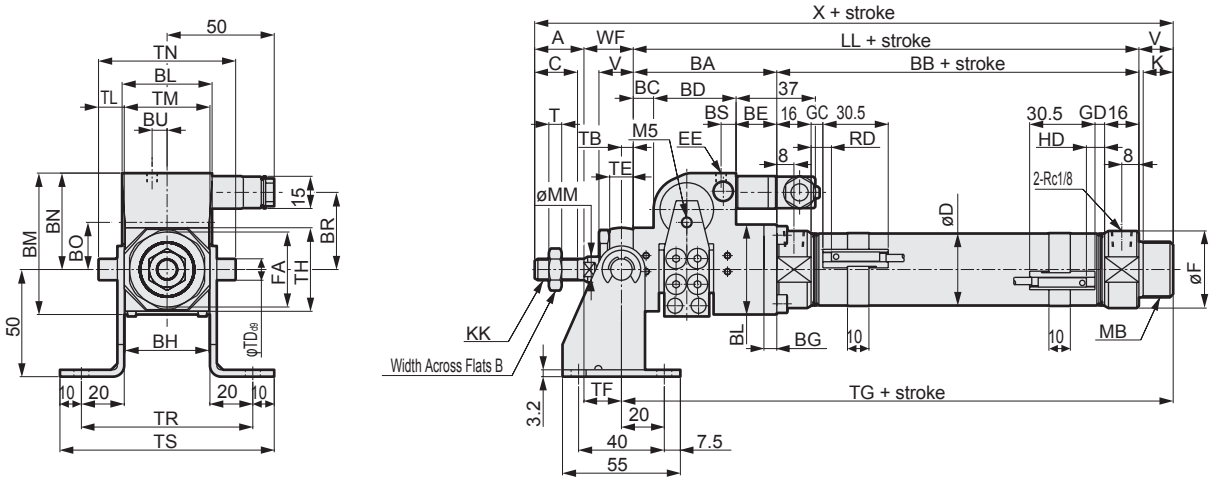

1 : Refer to page 719 for HD, RD and protruding dimensions of T, T8*, and 2-color LED switches.
*2: The size of the exhaust port of brake section is the same as that of EE.
*3: ℓ dimensions should be rounded up to the nearest whole number.
*4: Option with bracket cannot be selected for the brake section with cover "U".
*5 : For the dimensions of the accessories, refer to page 731.

Code	Rod side trunnion (TA)																					
Bore size (mm)	A	B	BA	BB	BC	BD	BE	BG	BH	BL	BM	BN	BO	BR	BS	BU	C	D	EE	F	FA	K
ø20	20	13	58	66	9	30	19	5	29	34	55	38	19	29	4	3.8	18	21.4	M5	28	26	12
ø25	23	17	67	69	9.5	38.5	19	6	39	42	66	45	22	34.5	7	7	20	26.4	Rc1/8	32	35	14
ø32	23	17	67	69	9.5	38.5	19	6	39	42	66	45	22	34.5	7	7	20	33.6	Rc1/8	36	35	14
ø40	25	19	74	73	8	48	18	8	50	50	80.5	55.5	25	39.5	7	7	22	41.6	Rc1/8	45	35	14

Code													Mounting dimensions						
Bore size (mm)	KK	LL	MB	MM	T	TL	TM	TR	TS	V	WF	X	TB	TD	TE	TF	TG	TH	TL
ø20	M 8 x 1.0	124	M 18 x 1.5	10	5	8	30	70	90	14	24	182	4.5	8	9	19.5	142.5	29.5	8
ø25	M 10 x 1.25	136	M 26 x 1.5	12	6	12	40	80	100	16	23	198	5.5	10	11	17.5	157.5	39	12
ø32	M 10 x 1.25	136	M 26 x 1.5	12	6	12	40	80	100	16	23	198	5.5	10	11	17.5	157.5	39	12
ø40	M 12 x 1.5	147	M 26 x 1.5	14	7	9.5	53	93	113	16	23	211	5.5	10	11	17.5	168.5	44	9.5

Code			With switch (T0, T5, T2, T3)				With switch (T2W, T3W)				With bellows				Boss cutoff type	
Bore size (mm)	TM	TN	GC	GD	RD	HD	GC	GD	RD	HD	XF	b	d	ℓ	X1	TG1
ø20	30	46	4.0	3.0	8.0	7.0	6.0	5.0	10.0	9.0	44	30	30	(Stroke/3) + 6	168	128.5
ø25	40	64	5.5	4.5	9.5	8.5	7.5	6.5	11.5	10.5	46	32	46	(Stroke/3.25) + 7	182	141.5
ø32	40	64	5.5	4.5	9.5	8.5	7.5	6.5	11.5	10.5	46	32	46	(Stroke/3.25) + 7	182	141.5
ø40	53	72	7.5	6.5	11.5	10.5	9.5	8.5	13.5	12.5	48	34	46	(Stroke/3.25) + 7	195	152.5

Dimensions

● Head side trunnion (TB)

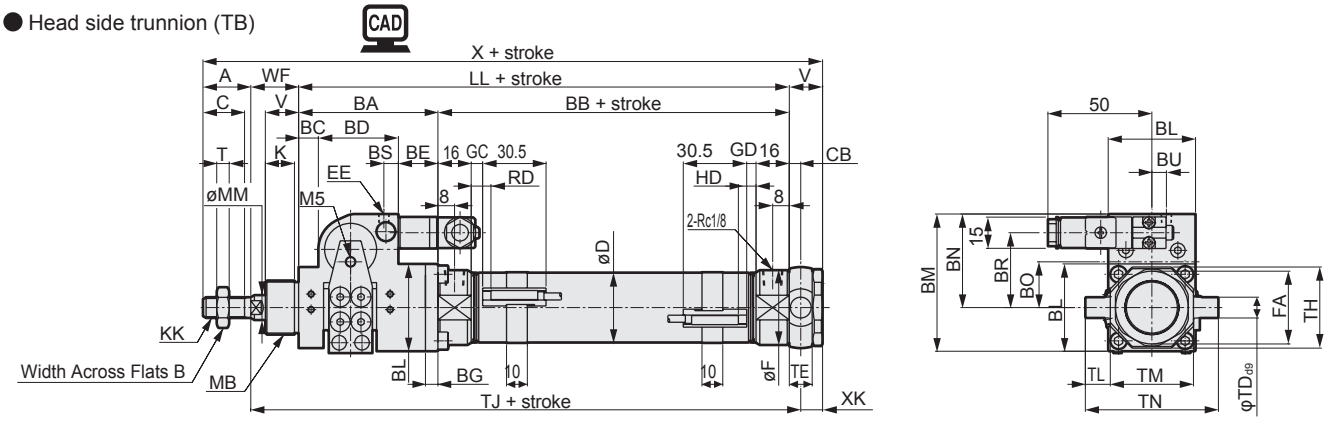

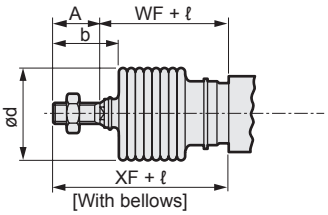

● Head side trunnion (TB) with bracket (option)

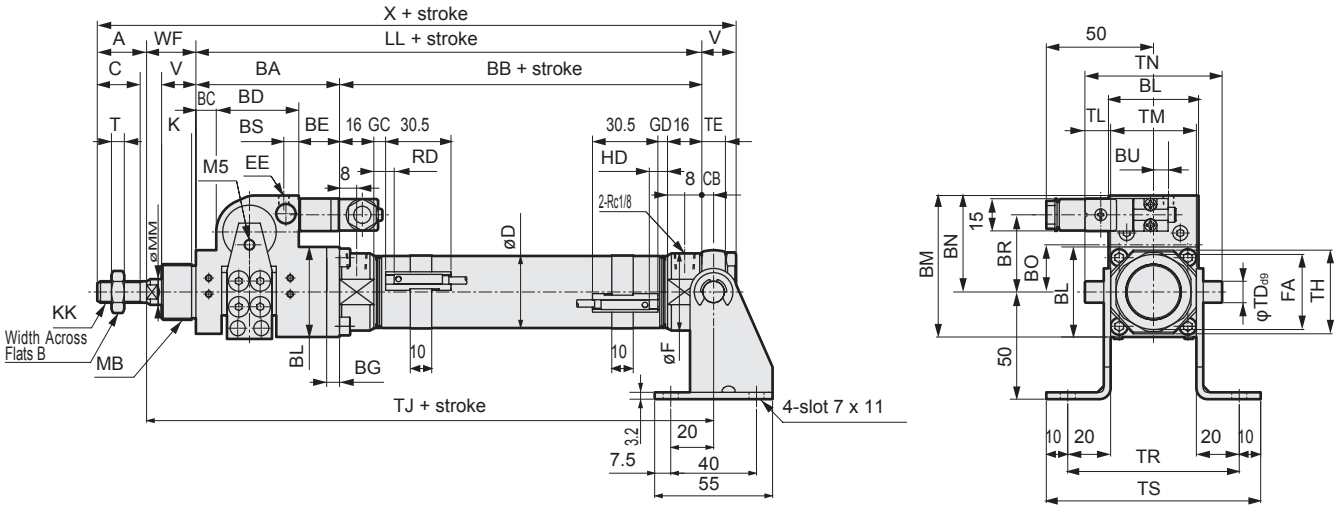

1 : Refer to page 719 for HD, RD and protruding dimensions of T, T8*, and 2-color LED switches.
*2 : The size of the exhaust port of brake section is the same as that of EE.
*3 : ℓ dimensions should be rounded up to the nearest whole number.
*4 : For the dimensions of the accessories, refer to page 731.

Code	Head side trunnion (TB) basic dimensions																				
Bore size (mm)	A	B	BA	BB	BC	BD	BE	BG	BL	BM	BN	BO	BR	BS	BU	C	CB	D	EE	F	FA
ø20	20	13	58	66	9	30	19	5	34	55	38	19	29	4	3.8	18	4.5	21.4	M5	28	26
ø25	23	17	67	69	9.5	38.5	19	6	42	66	45	22	34.5	7	7	20	5.5	26.4	Rc1/8	32	35
ø32	23	17	67	69	9.5	38.5	19	6	42	66	45	22	34.5	7	7	20	5.5	33.6	Rc1/8	36	35
ø40	25	19	74	73	8	48	18	8	50	80.5	55.5	25	39.5	7	7	22	5.5	41.6	Rc1/8	45	35

Code											Mounting dimensions								
Bore size (mm)	K	KK	LL	MB	MM	T	V	WF	X	XK	TD	TE	TH	TJ	TL	TM	TN	TR	TS
ø20	12	M 8 x 1.0	124	M 18 x 1.5	10	5	14	24	182	9.5	8	9	29.5	152.5	8	30	46	70	90
ø25	14	M 10 x 1.25	136	M 26 x 1.5	12	6	16	23	198	10.5	10	11	39	164.5	12	40	64	80	100
ø32	14	M 10 x 1.25	136	M 26 x 1.5	12	6	16	23	198	10.5	10	11	39	164.5	12	40	64	80	100
ø40	14	M 12 x 1.5	147	M 26 x 1.5	14	7	16	23	211	10.5	10	11	44	175.5	9.5	53	72	93	113

Code	With switch (T0, T5, T2, T3)				With switch (T2W, T3W)				With bellows			
Bore size (mm)	GC	GD	RD	HD	GC	GD	RD	HD	XF	b	d	ℓ
ø20	4.0	3.0	8.0	7.0	6.0	5.0	10.0	9.0	44	30	30	(Stroke/3) + 6
ø25	5.5	4.5	9.5	8.5	7.5	6.5	11.5	10.5	46	32	46	(Stroke/3.25) + 7
ø32	5.5	4.5	9.5	8.5	7.5	6.5	11.5	10.5	46	32	46	(Stroke/3.25) + 7
ø40	7.5	6.5	11.5	10.5	9.5	8.5	13.5	12.5	48	34	46	(Stroke/3.25) + 7

LCM
LCR
LCG
LCW
LCX
STM
STG
STS/STL
STR2
UCA2
ULK*
JSK/M2
JSG
JSC3/JSC4
USSD
UFCD
USC
UB
JSB3
LMB
LML
HCM
HCA
LBC
CAC4
UCAC2
CAC-N
UCAC-N
RCS2
RCC2
PCC
SHC
MCP
GLC
MFC
BBS
RRC
GRC
RV3*
NHS
HRL
LN
Hand
Chuk
MecHnd/Chuk
ShkAbs
FJ
FK
SpdContr
Ending

Dimensions

● Without valve for brake / Basic (JSK2-00)

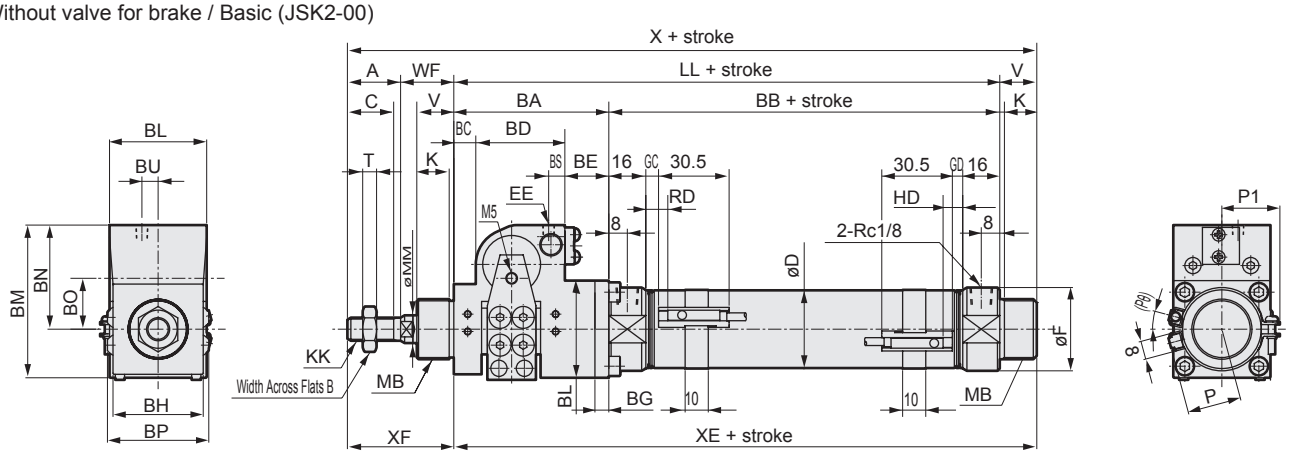

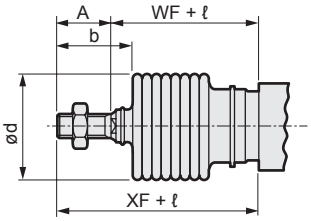

[With bellows]

1 : Refer to page 719 for HD, RD and protruding dimensions of T, T8*, and 2-color LED switches.
*2 : The mounting dimensions are the same as those of JSK2-V (with valve). Refer to pages 712 to 717.
*3 : ℓ dimensions should be rounded up to the nearest whole number.
*4 : For the dimensions of the accessories, refer to page 731.

Code	Without valve/basic (JSK2-00) basic dimensions																		
Bore size (mm)	A	B	BA	BB	BC	BD	BE	BG	BH	BL	BM	BN	BO	BP	BS	BU	C	D	EE
ø20	20	13	58	66	9	30	19	5	29	34	55	38	19	38	4	3.8	18	21.4	M5
ø25	23	17	67	69	9.5	38.5	19	6	39	42	66	45	22	43.8	7	7	20	26.4	Rc1/8
ø32	23	17	67	69	9.5	38.5	19	6	39	42	66	45	22	43.8	7	7	20	33.6	Rc1/8
ø40	25	19	74	73	8	48	18	8	50	50	80.5	55.5	25	52	7	7	22	41.6	Rc1/8

Code														With switch (T0, T5, T2, T3)				With switch (T2W, T3W)		
Bore size (mm)	F	K	KK	LL	MB	MM	T	V	WF	X	XE	XF	GC	GD	RD	HD	GC	GD	RD
ø20	28	12	M 8 x 1.0	124	M 18 x 1.5	10	5	14	24	182	138	44	4.0	3.0	8.0	7.0	6.0	5.0	10.0
ø25	32	14	M 10 x 1.25	136	M 26 x 1.5	12	6	16	23	198	152	46	5.5	4.5	9.5	8.5	7.5	6.5	11.5
ø32	36	14	M 10 x 1.25	136	M 26 x 1.5	12	6	16	23	198	152	46	5.5	4.5	9.5	8.5	7.5	6.5	11.5
ø40	45	14	M 12 x 1.5	147	M 26 x 1.5	14	7	16	23	211	163	48	7.5	6.5	11.5	10.5	9.5	8.5	13.5

Code					With bellows		
Bore size (mm)	HD	P	P1	(Pθ)°	b	d	ℓ
ø20	9.0	17.3	19.5	22	30	30	(Stroke/3) + 6
ø25	10.5	19.8	22.0	18	32	46	(Stroke/3.25) + 7
ø32	10.5	24.3	25.5	15	32	46	(Stroke/3.25) + 7
ø40	12.5	28.3	29.5	12	34	46	(Stroke/3.25) + 7

Dimensions

● Brake section with cover (U) / Basic (JSK2-00)

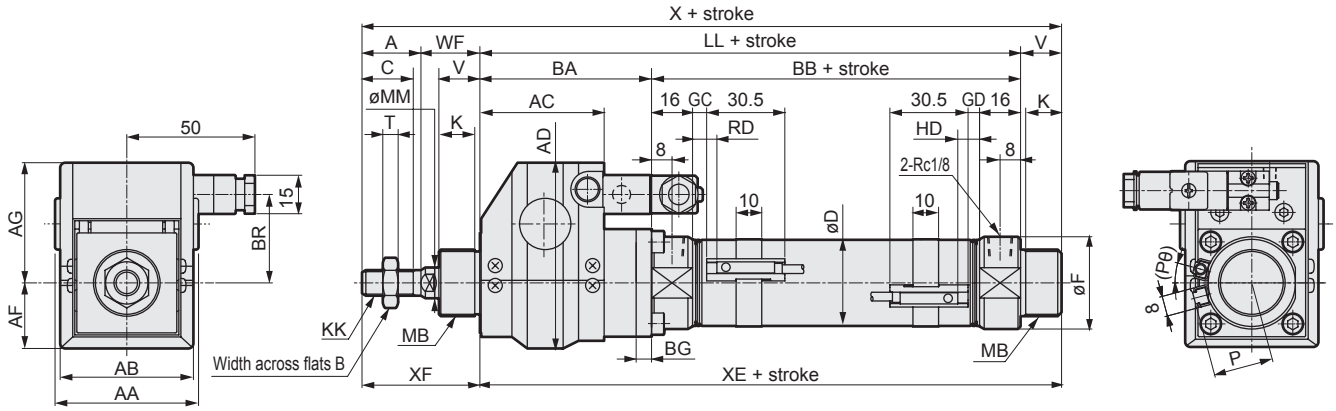

RD: Rod side max. sensitivity position
HD: Head side max. sensitivity position

Code	Basic (00) basic dimensions																	
Bore size (mm)	A	AA	AB	AC	AD	AF	AG	B	BA	BB	BG	BR	C	D	F	K	KK	LL
ø20	20	51	47	39	58.5	19.5	39	13	58	66	5	29	18	21.4	28	12	M8x1.0	124
ø25	23	56	52	48.5	72.5	25	47.5	17	67	69	6	34.5	20	26.4	32	14	M10x1.25	136
ø32	23	56	52	48.5	72.5	25	47.5	17	67	69	6	34.5	20	33.6	36	14	M10x1.25	136
ø40	25	69	65	56	85.75	28.75	57	19	74	73	8	39.5	22	41.6	45	14	M12x1.5	147

Code									With switch (T0, T5, T2, T3)				With switch (T2W, T3W)					
Bore size (mm)	MB	MM	T	V	WF	X	XE	XF	GC	GD	RD	HD	GC	GD	RD	HD	P	(Pθ)°
ø20	M18x1.5	10	5	14	24	182	138	44	4.0	3.0	8.0	7.0	6.0	5.0	10.0	9.0	17.3	22
ø25	M26x1.5	12	6	16	23	198	152	46	5.5	4.5	9.5	8.5	7.5	6.5	11.5	10.5	19.8	18
ø32	M26x1.5	12	6	16	23	198	152	46	5.5	4.5	9.5	8.5	7.5	6.5	11.5	10.5	24.3	15
ø40	M26x1.5	14	7	16	23	211	163	48	7.5	6.5	11.5	10.5	9.5	8.5	13.5	12.5	28.3	12

JSK2 Series common dimensions (with T1, T8 switches, with 2-color LED switch)

● JSK2-**-**-T1H/V, T8H/V, T$^{2}_{3}$YH/V

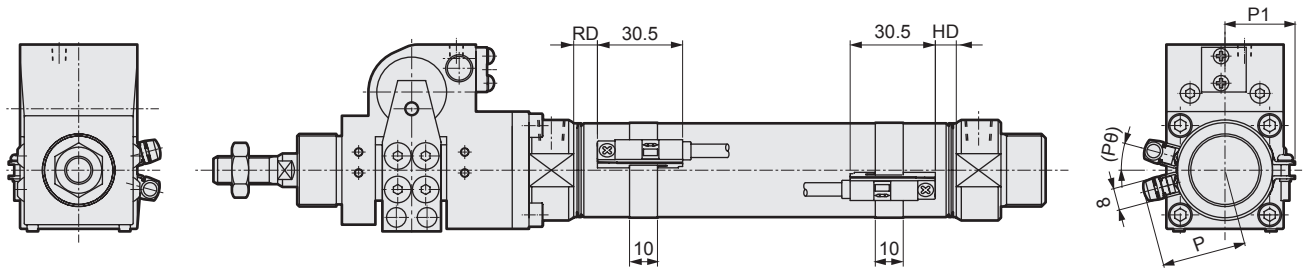

Switch installation dimensions

Code	1-color LED (T1, T8) 2-color LED (T$^{2}_{3}$Y)							
	RD *1		HD *2		P		P1	(Pθ)°
Bore size (mm)	T1,T$^{2}_{3}$Y	T8	T1,T$^{2}_{3}$Y	T8	T1	T$^{2}_{3}$Y,T8		
ø20	7.0	2.0	6.0	1	28.5	23.1	19.5	22
ø25	8.5	3.5	7.5	2.5	31.0	25.6	22.0	18
ø32	8.5	3.5	7.5	2.5	35.5	30.1	25.5	15
ø40	10.5	5.5	9.5	4.5	39.5	34.1	29.5	12

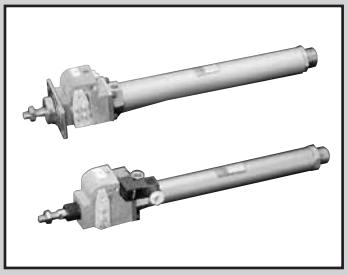

Brake cylinder Small bore size, disassembly
Double acting/double acting/with valve for brake

JSM2/JSM2-V Series

● Bore size: ø20/ø30/ø40

JIS symbol ● Double acting

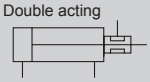

RoHS CAD

Specifications

Item		JSM2			JSM2-V		
Bore size mm		ø20	ø30	ø40	ø20	ø30	ø40
Actuation		Double acting			Double acting/with valve		
Working fluid		Compressed air					
Max. working pressure MPa		0.7 (≈100 psi, 7 bar)			0.6 (≈87 psi, 6 bar)		
Min. working pressure MPa	Brake section	0.35 (≈51 psi, 3.5 bar)					
	Cylinder	0.10 (≈15 psi, 1 bar)					
Proof pressure MPa		1.05 (≈150 psi, 10.5 bar)					
Ambient temperature °C		-10 (14°F) to 60 (140°F) (no freezing)			-10 (14°F) to 50 (122°F) (no freezing)		
Port size	Brake section	M5	Rc1/8		M5	Rc1/8	
	Cylinder	Rc1/8					
Stroke tolerance mm		$^{+1.0}_{0}$ (to 200)			$^{+1.2}_{0}$ (to 1000)		
Working piston speed mm/s		50 to 500					
Cushion		None					
Lubrication		Not required (use turbine oil class 1 ISO VG32 if necessary for lubrication)					
Holding force N		186	431	765	186	431	765
Allowable absorbed energy J		0.024	0.05	0.093	0.024	0.05	0.093

Note: This product cannot absorb high energy generated by external load. We recommend attaching an external shock absorber.

Electrical specification for brake valve

Item	JSM2-V-VALVE-KIT- Voltage		
Rated voltage (V)	100 AC(50/60 Hz)	200 AC(50/60 Hz)	24 DC
Starting current (A)	0.056/0.044	0.034/0.026	0.075
Holding current (A)	0.028/0.022	0.017/0.013	
Power consumption (W)	1.8/1.4	2.1/1.6	1.8
Voltage fluctuation range	±10%		
Thermal class	Class B molded coil		

*1 : 100/200 VAC coil is available for 110/220 VAC (60 Hz).
*2 : Refer to “Pneumatic Valves (CB-023SA)” for details on valves (P5136 Series).

Stroke

Bore size (mm)	Standard stroke (mm)	Max. stroke (mm)	Min. stroke (mm)
ø20	25/50/75/100/125/150 175/200/250/300	700	1
ø30			
ø40			

● For types with switch, minimum stroke varies depending on mounting method. Refer to the following table.
The custom stroke is available in 1 mm increments.

Min. stroke with switch (T-switch)

Switch model No.	1	2	3
T0, T5, T2, T3	10	27	51
T2W, T3W	10	31	55
T2Y, T3Y, T1	10	25	49
T8	10	23	47

Switch specifications (T-switch)

● 1-color/2-color LED

Item	Proximity 2-wire	Proximity 2-wire			Proximity 3-wire				Reed 2-wire						
	T1H/T1V	T2H/T2V/ T2JH/T2JV	T2YH/ T2YV	T2WH/ T2WV	T3H/ T3V	T3PH/ T3PV	T3YH/ T3YV	T3WH/ T3WV	T0H/T0V		T5H/T5V		T8H/T8V		
Applications	For programmable controller, relay, compact solenoid valve	Dedicated for programmable controller			For programmable controller, relay				For programmable controller, relay		For programmable controller, relay, IC circuit (no indicator lamp), serial connection		For programmable controller, relay		
Output method	-				NPN output	PNP output	NPN output	NPN output	-						
Pwr. supp. V.	-				10 to 28 VDC				-						
Load voltage	85 to 265 VAC	10 to 30 VDC		24 VDC ±10%	30 VDC or less				12/24 VDC	100/110 VAC	5/12/24 VDC	100/110 VAC	12/24 VDC	110 VAC	220 VAC
Load current	5 to 100mA	5 to 20 mA (*3)			100 mA or less		50 mA or less		5 to 50mA	7 to 20mA	50 mA or less	20 mA or less	5 to 50mA	7 to 20mA	7 to 10mA
Indicator lamp	LED (Lit when ON)	LED (Lit when ON)	Red/green LED (Lit when ON)	Red/green LED (Lit when ON)	LED (Lit when ON)	Yellow LED (Lit when ON)	Red/green LED (Lit when ON)	Red/green LED (Lit when ON)	LED (Lit when ON)		No indicator lamp		LED (Lit when ON)		
Leakage current	1 mA or less with 100 VAC, 2 mA or less with 200 VAC	1 mA or less			10 μA or less				0mA						
Weight g	1 m: 33 3 m: 87 5 m: 142	1 m: 18 3 m: 49 5 m: 80	1 m: 33 3 m: 87 5 m: 142	1 m: 18 3 m: 49 5 m: 80	1 m: 18 3 m: 49 5 m: 80		1 m: 33 3 m: 87 5 m: 142	1 m: 18 3 m: 49 5 m: 80	1 m: 18 3 m: 49 5 m: 80				1 m: 33 3 m: 87 5 m: 142		

*1 : Refer to Ending Page 1 for detailed switch specifications and dimensions.
*2 : Switches other than the above models, such as switches with connectors, are also available. Refer to Ending Page 1.
*3 : The max. load current is 20 mA at 25°C. The current is lower than 20 mA if the operating ambient temperature around the switch is higher than 25°C. (5 to 10 mA at 60°C)

Cylinder weight

(Unit: kg)

Item/mounting / Bore size (mm)	Product weight when stroke (S) = 0 mm					Switch weight	Switch rail + band weight	Valve weight	Additional weight per S = 10 mm
	Basic (00)	Axial foot (LB)	Flange (FA)	Clevis (CA)	Trunnion (TA/TB)				
ø20	0.48	0.63	0.54	0.61	0.53	Refer to the weight in the switch specifications.	0.005	0.07	0.01
ø30	0.94	1.20	1.09	1.15	1.04		0.005		0.014
ø40	1.57	1.83	1.72	1.79	0.73		0.009		0.02

(Example) JSM2-V-LB-20-100-2-TOH-D

Product weight when S = 0 mm ..... 0.73 kg
Additional weight when S = 100 mm... $0.01 \times \frac{100}{10} = 0.1$ kg
Weight of 2 switches ..... (0.018 + 0.005) x 2 = 0.046 kg
Product weight ..... 0.73 kg + 0.1 kg + 0.046 kg = 0.88 kg

Theoretical thrust table

(Unit: N)

Bore size (mm)	Operating direction	Working pressure MPa							
		0.1	0.15	0.2	0.3	0.4	0.5	0.6	0.7
ø20	Push	31.4	47.1	62.8	94.2	1.26×10^2	1.57×10^2	1.88×10^2	2.20×10^2
	Pull	23.6	35.3	47.1	70.7	94.2	1.18×10^2	1.41×10^2	1.65×10^2
ø30	Push	70.7	1.06×10^2	1.41×10^2	2.12×10^2	2.83×10^2	3.53×10^2	4.24×10^2	4.95×10^2
	Pull	59.4	89.1	1.19×10^2	1.78×10^2	2.38×10^2	2.97×10^2	3.56×10^2	4.16×10^2
ø40	Push	1.26×10^2	1.88×10^2	2.51×10^2	3.77×10^2	5.03×10^2	6.28×10^2	7.54×10^2	8.80×10^2
	Pull	1.10×10^2	1.65×10^2	2.21×10^2	3.31×10^2	4.41×10^2	5.51×10^2	6.62×10^2	7.72×10^2

LCM
LCR
LCG
LCW
LCX
STM
STG
STS/STL
STR2
UCA2
ULK*
JSK/M2
JSG
JSC3/JSC4
USSD
UFCD
USC
UB
JSB3
LMB
LML
HCM
HCA
LBC
CAC4
UCAC2
CAC-N
UCAC-N
RCS2
RCC2
PCC
SHC
MCP
GLC
MFC
BBS
RRC
GRC
RV3*
NHS
HRL
LN
Hand
Chuk
MecHnd/Chuk
ShkAbs
FJ
FK
SpdContr
Ending

How to order

●Without valve

Without switch (built-in magnet for switch)

JSM2 - LB - 20 - 50 ——— P I

With switch (built-in magnet for switch)

JSM2 - LB - 20 - 50 —— T0H - R - P I

●With valve for brake

Without switch (built-in magnet for switch)

JSM2-V - LB - 20 - 50 - 1 ——— P I

With switch (built-in magnet for switch)

JSM2-V - LB - 20 - 50 - 1 - T0H - R - P I

Ⓐ Model No. *1
Ⓑ Mounting
Ⓒ Bore size
Ⓓ Stroke
Ⓔ Valve voltage
Ⓕ Switch model No.
Ⓖ Switch quantity
Ⓗ Option *3
Ⓘ Accessory

Code	Description	Double acting JSM2	With valve JSM2-V
Ⓑ Mounting			
00	Basic	●	●
LB	Axial foot	●	●
FA	Rod side flange	●	●
CA	Eye bracket	●	●
TA	Rod side trunnion	●	●
TB	Head side trunnion	●	●

Ⓒ Bore size (mm)			
20	ø20	●	●
30	ø30	●	●
40	ø40	●	●

Ⓓ Stroke (mm)

Bore size	Stroke *2	Custom stroke
ø20	1 to 700	In 1 mm increments
ø30	1 to 700	
ø40	1 to 700	

Ⓔ Valve voltage			
1	100 VAC (50/60 Hz)		●
2	200 VAC (50/60 Hz)		●
3	24 VDC		●

Ⓕ Switch model No.

Refer to the switch model No. table on the following page.

*** Lead wire length**			
Blank	1 m (standard)	●	●
3	3 m (option)	●	●
5	5 m (option)	●	●

Ⓖ Switch quantity			
R	1 on rod side	●	●
H	1 on head side	●	●
D	2	●	●
T	3	●	●
4	4 (when there are more than 4 switches, indicate switch quantity.)	●	●

Ⓗ Option

		Max. ambient temperature	Instantaneous max. temp		
J	Bellows	100°C	200°C	●	●
L	Bellows	250°C	400°C	●	●
M	Piston rod material (stainless steel)			●	●
P	Same port position			●	●
U	Brake section with cover			●	●

Ⓘ Accessory			
I	Rod eye	●	●
Y	Rod clevis (pin, washer, split pin attached)	●	●
B2	Clevis bracket (pin, snap ring attached)	●	●

⚠ Precautions for model No. selection

*1 : Low hydraulic can also be supplied as made-to-order product
Model numbers are JSM2-H and JSM2-VH.
*2 : Refer to page 720 for the min. stroke with switch.
*3 : For a TA mounting, the brake section with cover (U) cannot be selected.

[Example of model No.]

JSM2-V-LB-20-50-1-T0H-R-PI

Model: Brake cylinder with valve for brake

Ⓐ Model No. : With valve
Ⓑ Mounting : Axial foot
Ⓒ Bore size : ø20 mm
Ⓓ Stroke : 50 mm
Ⓔ Valve voltage : 100 VAC
Ⓕ Switch model No. : Reed T0H switch,
Ⓖ Switch quantity : 1 on rod side
Ⓗ Option : Same port position
Ⓘ Accessory : Rod eye

LCM
LCR
LCG
LCW
LCX
STM
STG
STS/STL
STR2
UCA2
ULK*
JSK/M2
JSG
JSC3/JSC4
USSD
UFCD
USC
UB
JSB3
LMB
LML
HCM
HCA
LBC
CAC4
UCAC2
CAC-N
UCAC-N
RCS2
RCC2
PCC
SHC
MCP
GLC
MFC
BBS
RRC
GRC
RV3*
NHS
HRL
LN
Hand
Chuk
MecHnd/Chuk
ShkAbs
FJ
FK
SpdContr
Ending

[F] Switch model No.

T-switch						
Straight lead wire	L-shaped lead wire	Contact	Voltage AC	Voltage DC	Indicator	Lead wire
TOH*	TOV*	Reed	●	●	1-color LED	2-wire
T5H*	T5V*	Reed	●	●	No indicator lamp	2-wire
T8H*	T8V*	Reed	●	●	1-color LED	2-wire
T1H*	T1V*	Proximity	●		1-color LED	2-wire
T2H*	T2V*	Proximity		●	1-color LED	2-wire
T3H*	T3V*	Proximity		●	1-color LED	3-wire
T3PH*	T3PV*	Proximity		●	1-color LED	3-wire
T2WH*	T2WV*	Proximity		●	2-color LED	2-wire
T2YH*	T2YV*	Proximity		●	2-color LED	2-wire
T3WH*	T3WV*	Proximity		●	2-color LED	3-wire
T3YH*	T3YV*	Proximity		●	2-color LED	3-wire
T2JH*	T2JV*	Proximity		●	Off-delay	2-wire

How to order switch

[T-switch]

● Switch body + mounting bracket set

JSM2 - T0H - 20

- 20: Bore size (Item Ⓒ on page 722)
- T0H: Switch model No. (Item Ⓕ on page 722)

● Switch body only

SW - T0H

- T0H: Switch model No. (Item Ⓕ on page 722)

● Mounting bracket set

JSM2 - T - 20

- 20: Bore size (Item Ⓒ on page 722)
- T: Mounting bracket

How to order brake valve

JSM2-V - VALVE-KIT - 1

❶ Valve voltage

Code	Description
1	100 VAC (50/60 Hz)
2	200 VAC (50/60 Hz)
3	24 VDC

How to order mounting bracket

Bore size (mm) / Mounting bracket	ø20	ø30	ø40
Basic (00) *3	M1-0020	M1-00-30	M1-00-30
Axial foot (LB)	M1-LB-20	M1-LB-30	M1-LB-30
Flange (FA)	M1-FA-20	M1-FA-30	M1-FA-30
Eye bracket (CA)	M1-CA-20	M1-CA-30	M1-CA-30
Trunnion (TA/TB)	M1-TA-20	M1-TA-30	M1-TA-40

*1: As for mounting brackets, the axial foot and flange include mounting nuts and toothed washers, and the trunnion includes mounting nuts.
2: For axial foot, 2 sets of the above “M1-LB-” are required.
*3: Mounting nut, toothed washer only. Although 1 set is attached with the basic of the product (00), use this when needed.

LCM
LCR
LCG
LCW
LCX
STM
STG
STS/STL
STR2
UCA2
ULK*
JSK/M2
JSG
JSC3/JSC4
USSD
UFCD
USC
UB
JSB3
LMB
LML
HCM
HCA
LBC
CAC4
UCAC2
CAC-N
UCAC-N
RCS2
RCC2
PCC
SHC
MCP
GLC
MFC
BBS
RRC
GRC
RV3*
NHS
HRL
LN
Hand
Chuk
MecHnd/Chuk
ShkAbs
FJ
FK
SpdContr
Ending

Material of mounting bracket

Mounting	Material	Remarks
LB	Steel	Zinc chromate
FA	Steel	Zinc chromate
TA/TB	Steel	Zinc chromate
CA	Steel	Zinc chromate

Note: Mounting bracket will be shipped with the product.
However, if the product is supplied with bellows and the mounting bracket is LB, FA, or TA, it will be shipped assembled.

Internal structure and parts list

- JSM2 (double acting/with switch)
- JSM2-V (with valve and switch)

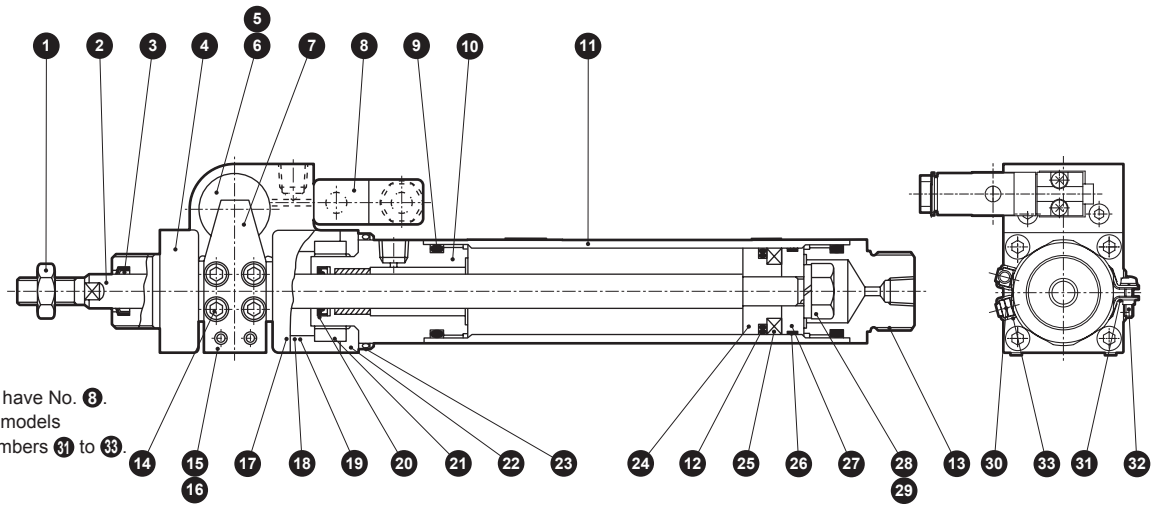

• Note: JSM2 does not have No. 8.
• Note: The switchless models do not have numbers 31 to 33.

Brake section cannot be disassembled

Parts list

No.	Part name	Material	Remarks	No.	Part name	Material	Remarks
1	Rod nut	Steel	Zinc chromate	17	Brake shoe metal	Cast iron	
2	Piston rod	ø20/ø30 stainless steel ø40 carbon steel	Industrial chrome plating	18	Bush	Dry bearing	
				19	Ring	Steel	
3	Scraper	Nitrile rubber		20	Rod packing	Nitrile rubber	
4	Brake body	Cast iron	Zinc chromate	21	Fixed ring	Steel	Zinc chromate
5	Brake piston	Copper alloy casting		22	Square flange	Steel	Zinc chromate
6	Piston packing	Nitrile rubber		23	Hex socket screw	Steel	Black finish
7	Lever	Steel	Zinc chromate	24	Piston A	Aluminum alloy	
8	Valve for brake release	---	P5136MO	25	Magnet	Plastic	
9	Cylinder gasket	Nitrile rubber		26	Wear ring	Acetal resin	
10	Rod cover	Aluminum alloy		27	Piston B	Aluminum alloy	
11	Cylinder tube	Aluminum alloy	Alumite	28	Hexagon nut	Steel	Zinc chromate
12	Piston packing	Nitrile rubber		29	Spring washer	Steel	Zinc chromate
13	Head cover	Aluminum alloy		With switch			
14	Hex socket screw	Steel	Black finish	30	Switch body	---	
15	Hex socket screw	Steel	Black finish	31	Band	Stainless steel	
16	Brake spring	Steel	Black finish	32	Pan head machine screw	Stainless steel	
				33	Switch rail	Stainless steel	

Repair parts list

No./part name / Bore size (mm)	Kit No.	Repair parts No.
ø20	JSM2-20K	3 9 12 20 27
ø30	JSM2-30K	
ø40	JSM2-40K	

Dimensions

● Basic (00) with switch

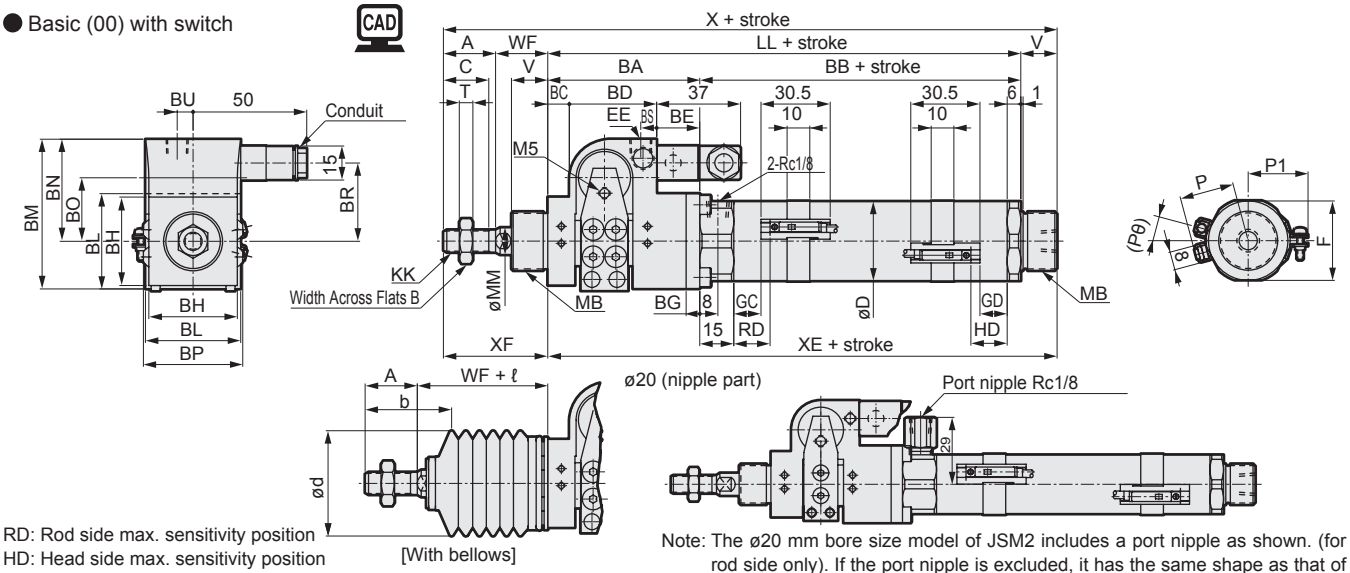

[With bellows]

RD: Rod side max. sensitivity position
HD: Head side max. sensitivity position
*1: The size of the exhaust port of brake section is the same as that of EE.
*2: Conduit on the valve terminal box for ø30 and ø40 mm is on the opposite side of that shown in the figure.
*3 : For the dimensions of the accessories, refer to page 731.

Note: The ø20 mm bore size model of JSM2 includes a port nipple as shown. (for rod side only). If the port nipple is excluded, it has the same shape as that of ø30 mm and ø40 mm bore size cylinders.

*4: ℓ dimensions should be rounded up to the nearest whole number.

Code	Basic (00) basic dimensions																						
Bore size (mm)	A	B	BA	BB	BC	BD	BE	BG	BH	BL	BM	BN	BO	BP	BR	BS	BU	C	D	EE	F	KK	LL
ø20	20	13	58	66	9	30	19	5	29	34	55	38	19	38	29	4	3.8	18	25	M5	26	M 8 x 1.0	124
ø30	23	17	67	72	9.5	38.5	19	6	39	42	66	45	22	43.8	34.5	7	7	20	35	Rc1/8	35	M 10 x 1.25	139
ø40	25	19	74	74	8	48	18	8	50	50	80.5	55	25	52	39.5	7	7	22	45	Rc1/8	46	M 12 x 1.5	148

Code									With switch (T0, T5, T2, T3)				With switch (T2W, T3W)							With bellows		
Bore size (mm)	MB	MM	T	V	WF	X	XE	XF	GC	GD	RD	HD	GC	GD	RD	HD	P	P1	(Pθ)°	b	d	ℓ
ø20	M 18 x 1.5	10	5	14	24	182	138	44	9	9	13	13	11	11	15	15	19.5	21	19	32	30	(Stroke/3) + 6
ø30	M 26 x 1.5	12	6	16	23	201	155	46	12	12	16	16	14	14	18	18	24.5	26	15	38	46	(stroke/3.25) + 7
ø40	M 26 x 1.5	14	7	16	23	212	164	48	13	13	17	17	15	15	19	19	29.5	31	12	40	46	(stroke/3.25) + 7

● Axial foot (LB)

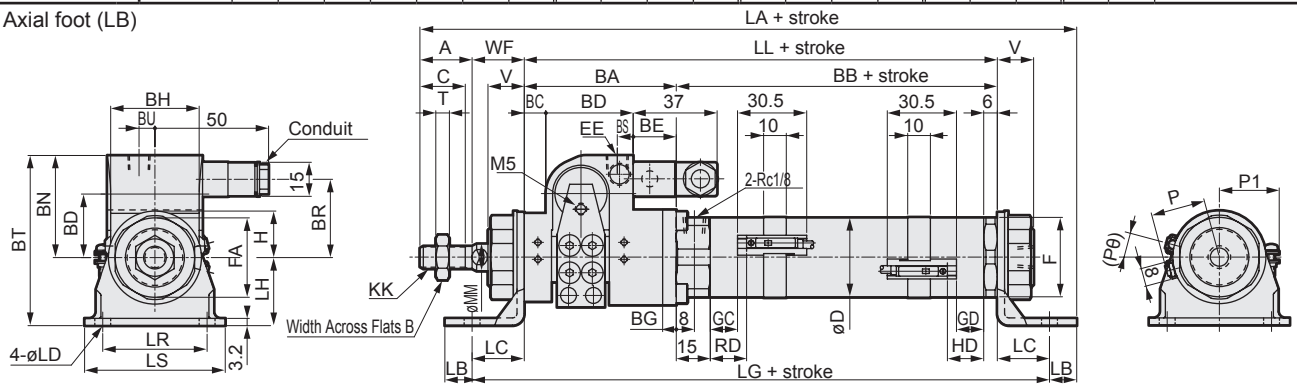

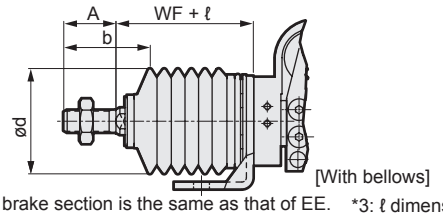

[With bellows]

*1 : The size of the exhaust port of brake section is the same as that of EE.
*2 : For the dimensions of the accessories, refer to page 731.
*3: ℓ dimensions should be rounded up to the nearest whole number.

Code	Axial foot (LB) basic dimensions																						
Bore size (mm)	A	B	BA	BB	BC	BD	BE	BG	BH	BT	BN	BO	BR	BS	BU	C	D	EE	F	FA	H	KK	LL
ø20	20	13	58	66	9	30	19	5	29	63	38	19	29	4	3.8	18	25	M5	26	26	15	M 8 x 1.0	124
ø30	23	17	67	72	9.5	38.5	19	6	39	75	45	22	34.5	7	7	20	35	Rc1/8	35	35	20	M 10 x 1.25	139
ø40	25	19	74	74	8	48	18	8	50	85.5	55.5	25	39.5	7	7	22	45	Rc1/8	46	35	20	M 12 x 1.5	148

Code					Mounting dimensions								With switch (T0, T5, T2, T3)				With switch (T2W, T3W)							With bellows		
Bore size (mm)	MM	T	V	WF	LA	LB	LC	LD	LG	LH	LR	LS	GC	GD	RD	HD	GC	GD	RD	HD	P	P1	(Pθ)°	b	d	ℓ
ø20	10	5	14	24	196	10	18	6	160	25	30	44	9	9	13	13	11	11	15	15	19.5	21	19	32	30	(Stroke/3) + 6
ø30	12	6	16	23	220	12	23	7	185	30	46	62	12	12	16	16	14	14	18	18	24.5	26	15	38	46	(stroke/3.25) + 7
ø40	14	7	16	23	231	12	23	7	194	30	46	62	13	13	17	17	15	15	19	19	29.5	31	12	40	46	(stroke/3.25) + 7

LCM
LCR
LCG
LCW
LCX
STM
STG
STS/STL
STR2
UCA2
ULK*
JSK/M2
JSG
JSC3/JSC4
USSD
UFCD
USC
UB
JSB3
LMB
LML
HCM
HCA
LBC
CAC4
UCAC2
CAC-N
UCAC-N
RCS2
RCC2
PCC
SHC
MCP
GLC
MFC
BBS
RRC
GRC
RV3*
NHS
HRL
LN
Hand
Chuk
MecHnd/Chuk
ShkAbs
FJ
FK
SpdContr
Ending

Dimensions CAD

● Rod side flange (FA)

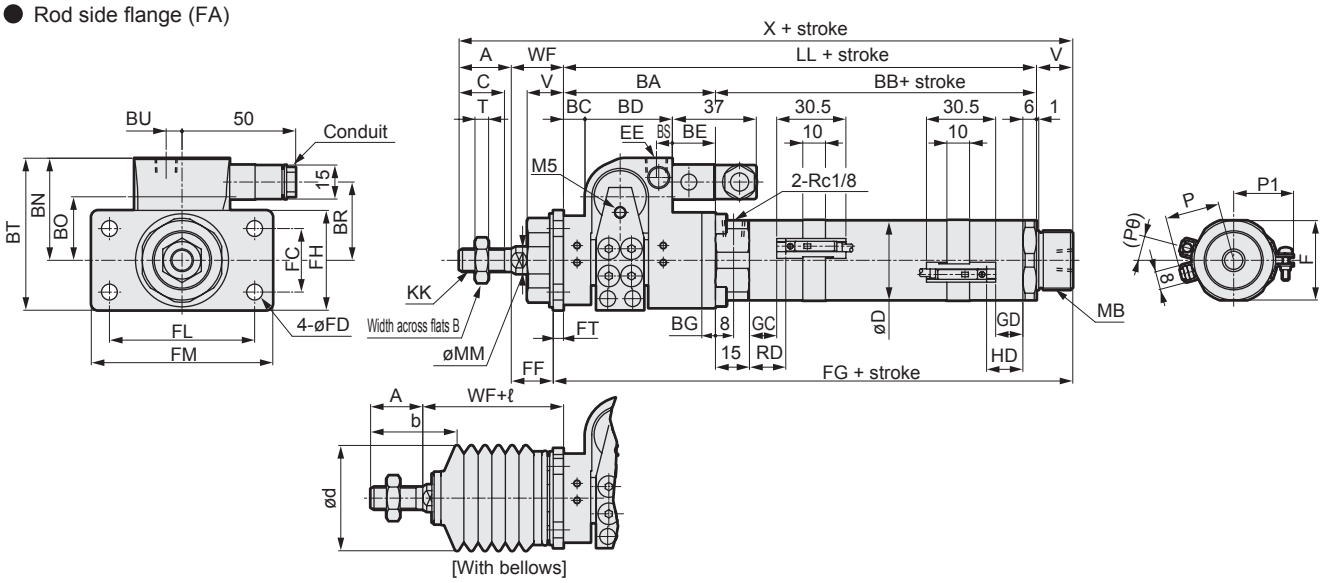

*1 : The size of the exhaust port of brake section is the same as that of EE.
*2 : For the dimensions of the accessories, refer to page 731.
*3 : ℓ dimensions should be rounded up to the nearest whole number.

Code	Rod side flange (FA) basic dimensions																							
Bore size (mm)	A	B	BA	BB	BC	BD	BE	BG	BT	BN	BO	BR	BS	BU	C	D	EE	F	KK	LL	MB	MM	MB
ø20	20	13	58	66	9	30	19	5	55	38	19	29	4	3.8	18	25	M5	26	M8x1.0	124	M18x1.5	10	M18x1.5
ø30	23	17	67	72	9.5	38.5	19	6	67	45.5	22	34.5	7	7	20	35	Rc1/8	35	M10x1.25	139	M26x1.5	12	M26x1.5
ø40	25	19	74	74	8	48	18	8	77.5	55.5	25	39.5	7	7	22	45	Rc1/8	46	M12x1.5	148	M26x1.5	14	M26x1.5

Code						Mounting dimensions								With switch (T0, T5, T2, T3)				With switch (T2W, T3W)							With bellows		
Bore size (mm)	MM	T	V	WF	X	FC	FD	FF	FG	FH	FL	FM	FT	GC	GD	RD	HD	GC	GD	RD	HD	P	P1	(Pθ)°	b	d	ℓ
ø20	10	5	14	24	182	20	6	20.8	141.2	34	40	54	3.2	9	9	13	13	11	11	15	15	19.5	21	19	32	30	(Stroke/3) + 6
ø30	12	6	16	23	201	28	7	18.5	159.5	44	64	80	4.5	12	12	16	16	14	14	18	18	24.5	26	15	38	46	(Stroke/3.25) + 7
ø40	14	7	16	23	212	28	7	18.5	168.5	44	64	80	4.5	13	13	17	17	15	15	19	19	29.5	31	12	40	46	(Stroke/3.25) + 7

● Eye bracket (CA)

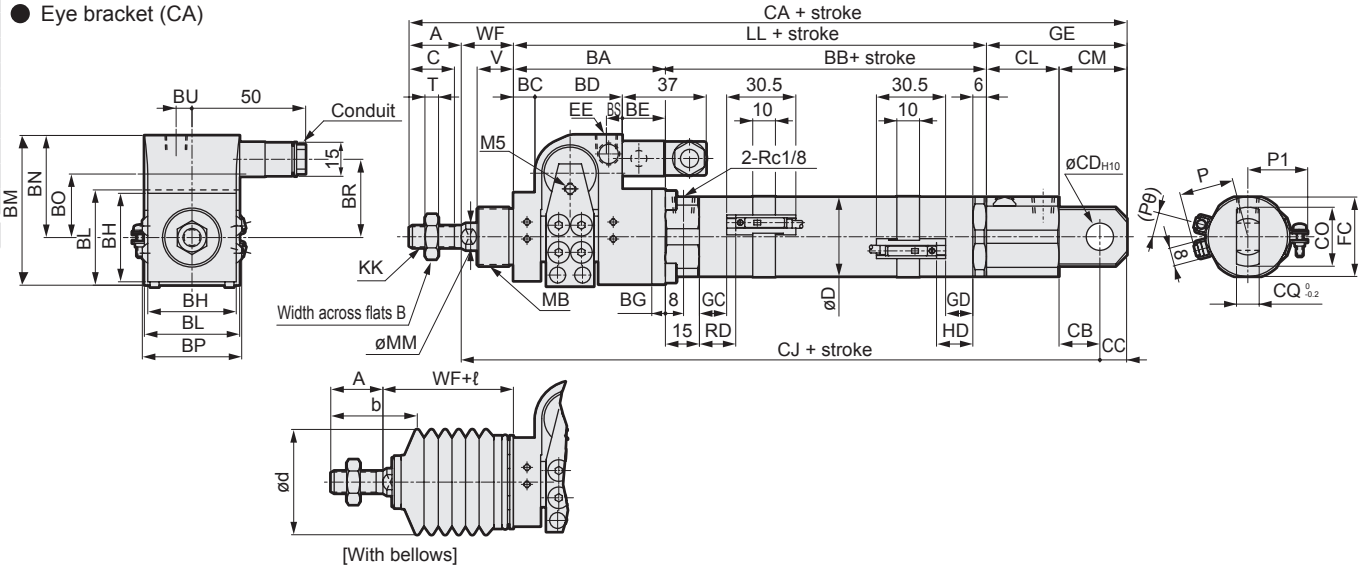

*1 : The size of the exhaust port of brake section is the same as that of EE.
*2 : For the dimensions of the accessories, refer to page 731.
*3 : ℓ dimensions should be rounded up to the nearest whole number.

Code	Eye bracket (CA) basic dimensions																							
Bore size (mm)	A	B	BA	BB	BC	BD	BE	BG	BL	BM	BN	BO	BP	BR	BS	BU	C	D	EE	F	GE	KK	LL	MB
ø20	20	13	58	66	9	30	19	5	34	55	38	19	38	29	4	3.8	18	25	M5	26	55	M8x1.0	124	M18x1.5
ø30	23	17	67	72	9.5	38.5	19	6	42	66	45	22	43.8	34.5	7	7	20	35	Rc1/8	35	62	M10x1.25	139	M26x1.5
ø40	25	19	74	74	8	48	18	8	50	80.5	55.5	25	52	39.5	7	7	22	45	Rc1/8	35	62	M12x1.5	148	M26x1.5

Code					Mounting dimensions										With switch (T0, T5, T2, T3)				With switch (T2W, T3W)							With bellows		
Bore size (mm)	MM	T	V	WF	CA	CB	CC	CD	CJ	CL	CM	CN	CO	CQ	GC	GD	RD	HD	GC	GD	RD	HD	P	P1	(Pθ)°	b	d	ℓ
ø20	10	5	14	24	223	14	10	10	193	31	24	8	22	8	9	9	13	13	11	11	15	15	19.5	21	19	32	30	(Stroke/3) + 6
ø30	12	6	16	23	247	18	12	12	212	32	30	7	26	10	12	12	16	16	14	14	18	18	24.5	26	15	38	46	(Stroke/3.25) + 7
ø40	14	7	16	23	258	18	12	12	221	32	30	7	26	10	13	13	17	17	15	15	19	19	29.5	31	12	40	46	(Stroke/3.25) + 7

Dimensions

● Rod side trunnion (TA)

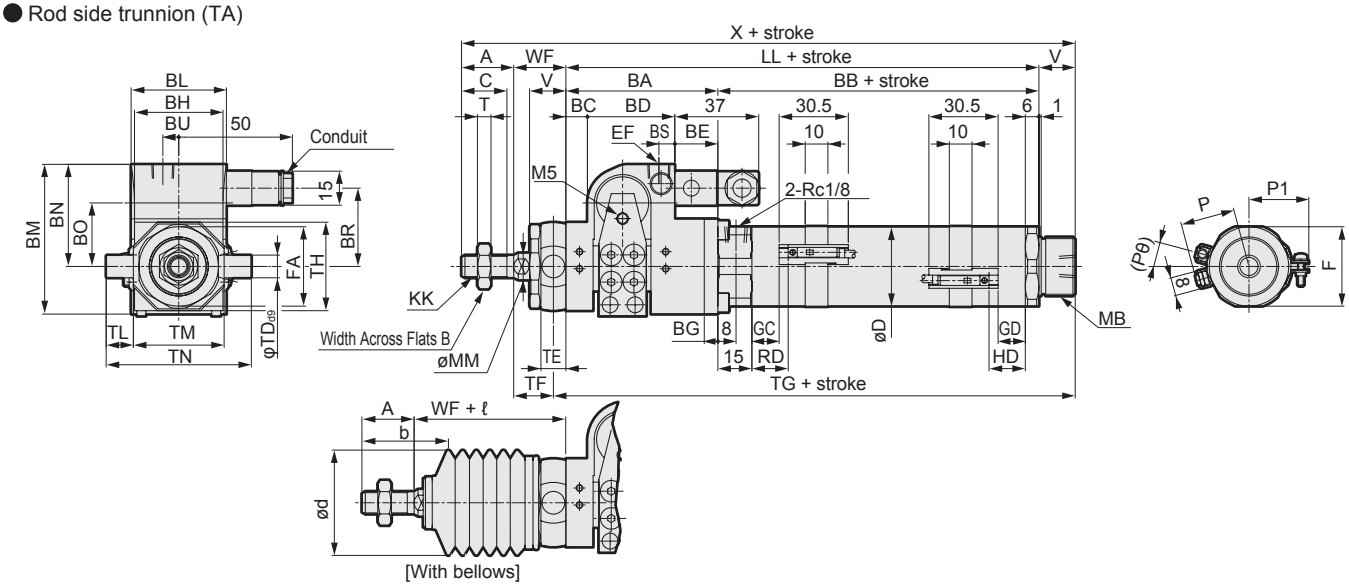

*1 : The size of the exhaust port of brake section is the same as that of EE.
*3: ℓ dimensions should be rounded up to the nearest whole number.
*2 : For the dimensions of the accessories, refer to page 731.

Code	Rod side trunnion (TA) basic dimensions																							
Bore size (mm)	A	B	BA	BB	BC	BD	BE	BG	BH	BL	BM	BN	BO	BR	BS	BU	C	D	EE	F	FA	KK	LL	MB
ø20	20	13	58	66	9	30	19	5	29	34	55	38	19	29	4	3.8	18	25	M5	26	26	M 8 x 1.0	124	M 18 x 1.5
ø30	23	17	67	72	9.5	38.5	19	6	39	42	66	45.5	22	34.5	7	7	20	35	Rc1/8	35	35	M 10 x 1.25	139	M 26 x 1.5
ø40	25	19	74	74	8	48	18	8	50	50	80.5	55.5	25	39.5	7	7	22	45	Rc1/8	46	35	M 12 x 1.5	148	M 26 x 1.5

Code						Mounting dimensions									With switch (T0, T5, T2, T3)				With switch (T2W, T3W)							With bellows		
Bore size (mm)	MM	T	V	WF	X	TB	TD	TE	TF	TG	TH	TL	TM	TN	GC	GD	RD	HD	GC	GD	RD	HD	P	P1	(Pθ)°	b	d	ℓ
ø20	10	5	14	24	182	4.5	8	9	19.5	142.5	29.5	8	30	46	9	9	13	13	11	11	15	15	19.5	21	19	32	30	(Stroke/3) + 6
ø30	12	6	16	23	201	5.5	10	11	17.5	160.5	39	12	40	64	12	12	16	16	14	14	18	18	24.5	26	15	38	46	(stroke/3.25) + 7
ø40	14	7	16	23	212	5.5	10	11	17.5	169.5	44	9.5	53	72	13	13	17	17	15	15	19	19	29.5	31	12	40	46	(stroke/3.25) + 7

● Head side trunnion (TB)

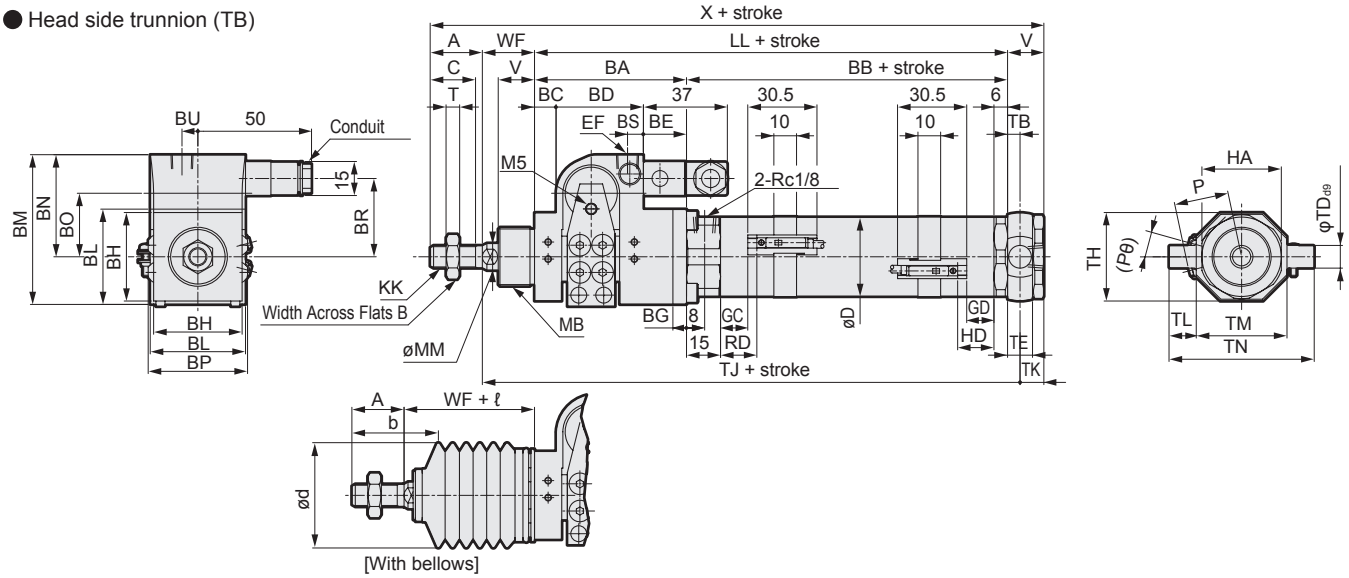

*1 : The size of the exhaust port of brake section is the same as that of EE.
*3: ℓ dimensions should be rounded up to the nearest whole number.
*2 : For the dimensions of the accessories, refer to page 731.

Code	Head side trunnion (TB) basic dimensions																							
Bore size (mm)	A	B	BA	BB	BC	BD	BE	BG	BL	BM	BN	BO	BR	BS	BU	C	D	EE	FA	KK	LL	MB	MM
ø20	20	13	58	66	9	30	19	5	34	55	38	19	29	4	3.8	18	25	M5	26	M 8 x 1.0	124	M 18 x 1.5	10
ø30	23	17	67	72	9.5	38.5	19	6	42	66	45	22	34.5	7	4	20	35	Rc1/8	35	M 10 x 1.25	139	M 26 x 1.5	12
ø40	25	19	74	74	8	48	18	8	50	80.5	55.5	25	39.5	7	7	22	45	Rc1/8	35	M 12 x 1.5	148	M 26 x 1.5	14

Code					Mounting dimensions									With switch (T0, T5, T2, T3)				With switch (T2W, T3W)						With bellows		
Bore size (mm)	T	V	WF	X	TB	TD	TE	TH	TJ	TK	TL	TM	TN	GC	GD	RD	HD	GC	GD	RD	HD	P	(Pθ)°	b	d	ℓ
ø20	5	14	24	182	4.5	8	9	29.5	152.5	9.5	8	30	46	9	9	13	13	11	11	15	15	19.5	19	32	30	(Stroke/3) + 6
ø30	6	16	23	201	5.5	10	11	39	167.5	10.5	12	40	64	12	12	16	16	14	14	18	18	24.5	15	38	46	(stroke/3.25) + 7
ø40	7	16	23	212	5.5	10	11	44	176.5	10.5	9.5	53	72	13	13	17	17	15	15	19	19	29.5	12	40	46	(stroke/3.25) + 7

LCM
LCR
LCG
LCW
LCX
STM
STG
STS/STL
STR2
UCA2
ULK*
JSK/M2
JSG
JSC3/JSC4
USSD
UFCD
USC
UB
JSB3
LMB
LML
HCM
HCA
LBC
CAC4
UCAC2
CAC-N
UCAC-N
RCS2
RCC2
PCC
SHC
MCP
GLC
MFC
BBS
RRC
GRC
RV3*
NHS
HRL
LN
Hand
Chuk
MecHnd/Chuk
ShkAbs
FJ
FK
SpdContr
Ending

Dimensions

● Without valve, basic (JSM2-00)

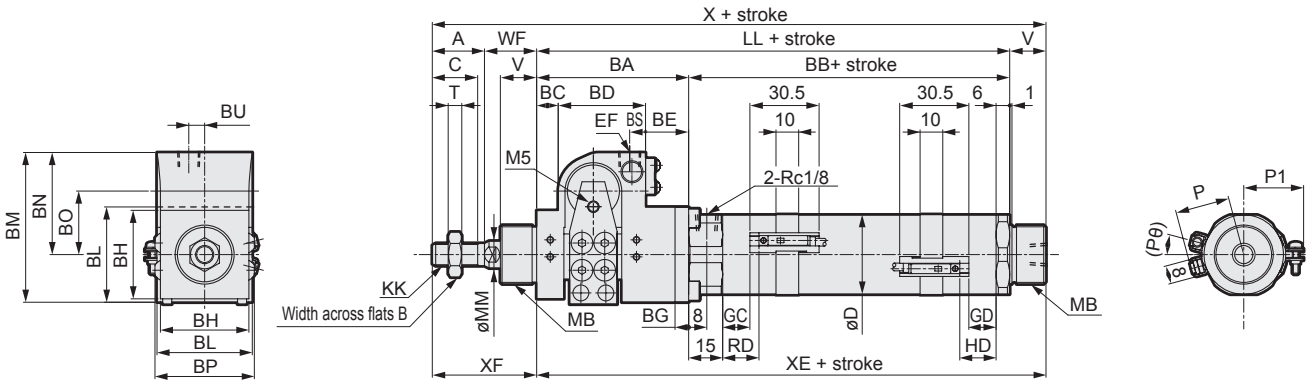

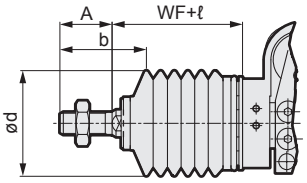

[With bellows]

*1 : The mounting dimensions are the same as those of JSM2-V (with valve for brake). Refer to pages 725 to 727.
*2 : For the dimensions of the accessories, refer to page 731.
*3 : ℓ dimensions should be rounded up to the nearest whole number.

Code	Without valve, basic (JSM2-00) basic dimensions																					
Bore size (mm)	A	B	BA	BB	BC	BD	BE	BG	BH	BL	BM	BN	BO	BP	BS	BU	C	D	EE	F	KK	LL
ø20	20	13	58	66	9	30	19	5	29	34	55	38	25	38	4	3.8	18	25	M5	26	M8x1.0	124
ø30	23	17	67	72	9.5	38.5	19	6	39	42	66	45	32	43.8	7	7	20	35	Rc1/8	35	M10x1.25	139
ø40	25	19	74	74	8	48	18	8	50	50	80.5	55.5	36.5	52	7	7	22	45	Rc1/8	46	M12x1.5	148

Code									With switch (T0, T5, T2, T3)				With switch (T2W, T3W)						With bellows		
Bore size (mm)	MB	MM	T	V	WF	X	XE	XF	GC	GD	RD	HD	GC	GD	RD	HD	P	(Pθ)°	b	d	ℓ
ø20	M18x1.5	10	5	14	24	182	138	44	9	9	13	13	11	11	15	15	19.5	19	32	30	(Stroke/3) + 6
ø30	M26x1.5	12	6	16	23	201	155	46	12	12	16	16	14	14	18	18	24.5	15	38	46	(Stroke/3.25) + 7
ø40	M26x1.5	14	7	16	23	212	164	48	13	13	17	17	15	15	19	19	29.5	12	40	46	(Stroke/3.25) + 7

Dimensions

● Same port position (P)/basic (JSM2-00)

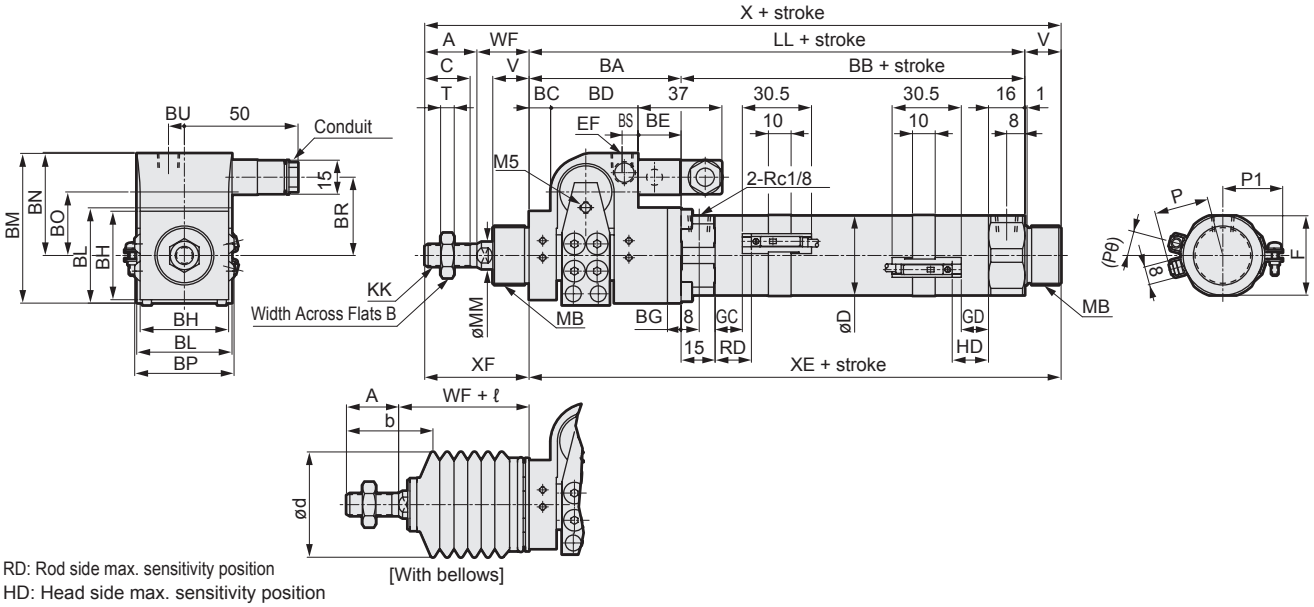

RD: Rod side max. sensitivity position
HD: Head side max. sensitivity position

Code	Basic (00) basic dimensions																	
Bore size (mm)	A	B	BA	BB	BC	BD	BE	BG	BS	C	D	EE	F	KK	LL	MB	MM	T
ø20	20	13	58	76	9	30	19	5	4	18	25	M5	26	M 8 x 1.0	134	M 18 x 1.5	10	5
ø30	23	17	67	82	9.5	38.5	19	6	7	20	35	Rc1/8	35	M 10 x 1.25	149	M 26 x 1.5	12	6
ø40	25	19	74	84	8	48	18	8	7	22	45	Rc1/8	46	M 12 x 1.5	158	M 26 x 1.5	14	7

Code						With switch (T0, T5, T2, T3)				With switch (T2W, T3W)							With bellows		
Bore size (mm)	V	WF	X	XE	XF	GC	GD	RD	HD	GC	GD	RD	HD	P	P1	(Pθ)°	b	d	ℓ
ø20	14	24	192	138	44	9	9	13	13	11	11	15	15	19.5	21	19	32	30	(Stroke/3) + 6
ø30	16	23	211	155	46	12	12	16	16	14	14	18	18	24.5	26	15	38	46	(stroke/3.25) + 7
ø40	16	23	222	164	48	13	13	17	17	15	15	19	19	29.5	31	12	40	46	(stroke/3.25) + 7

● Brake section with cover (U) / Basic (JSM2-00)

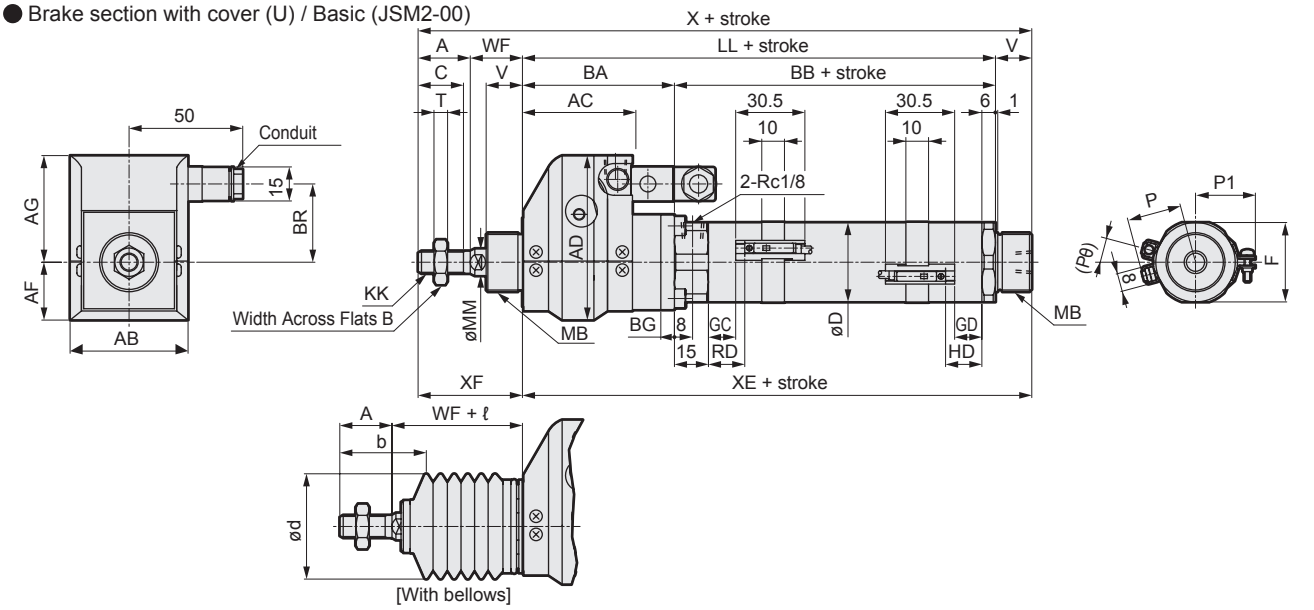

Code	Basic (00) basic dimensions																	
Bore size (mm)	A	AB	AC	AD	AF	AG	B	BA	BB	BG	BR	C	D	F	KK	LL	MB	MM
ø20	20	47	39	58.5	19.5	39	13	58	66	5	29	18	25	26	M 8 x 1.0	124	M 18 x 1.5	10
ø30	23	52	48.5	72.5	25	47.5	17	67	72	6	34.5	20	35	35	M 10 x 1.25	139	M 26 x 1.5	12
ø40	25	65	56	85.75	28.75	57	19	74	74	8	39.5	22	45	46	M 12 x 1.5	148	M 26 x 1.5	14

Code							With switch (T0, T5, T2, T3)				With switch (T2W, T3W)							With bellows		
Bore size (mm)	T	V	WF	X	XE	XF	GC	GD	RD	HD	GC	GD	RD	HD	P	P1	(Pθ)°	b	d	ℓ
ø20	5	14	24	182	138	44	9	9	13	13	11	11	15	15	19.5	21	19	32	30	(Stroke/3) + 6
ø30	6	16	23	201	155	46	12	12	16	16	14	14	18	18	24.5	26	15	38	46	(stroke/3.25) + 7
ø40	7	16	23	212	164	48	13	13	17	17	15	15	19	19	29.5	31	12	40	46	(stroke/3.25) + 7

LCM
LCR
LCG
LCW
LCX
STM
STG
STS/STL
STR2
UCA2
ULK*
JSK/M2
JSG
JSC3/JSC4
USSD
UFCD
USC
UB
JSB3
LMB
LML
HCM
HCA
LBC
CAC4
UCAC2
CAC-N
UCAC-N
RCS2
RCC2
PCC
SHC
MCP
GLC
MFC
BBS
RRC
GRC
RV3*
NHS
HRL
LN
Hand
Chuk
MecHnd/Chuk
ShkAbs
FJ
FK
SpdContr
Ending

JSM2 Series common dimensions (with T1, T8 switches, with 2-color LED switch)

● JSM2-**-**-T1H/V, T8H/V, T$^{2}_{3}$YH/V

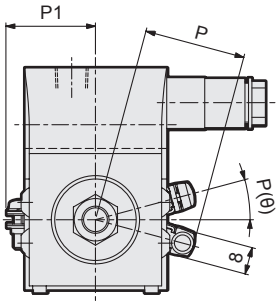

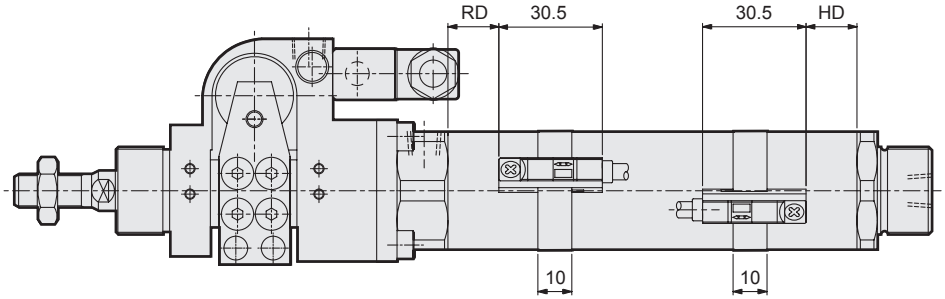

Switch installation dimensions

Code / Bore size (mm)	1-color LED (T1, T8) 2-color LED (T2/3 Y)							
	RD		HD		P		P1	(Pθ)°
	T1,T2/3Y,T2J	T8	T1,T2/3Y,T2J	T8	T2/3Y,T8,T2J	T1		
ø20	12	7	12	7	25	30	21	19
ø30	15	10	15	10	30	35	26	15
ø40	16	11	16	11	36	41	31	12

JSK2/JSM2 Series common accessory dimensions (rod eye, bracket, pin)

● Rod eye (I)

Material: Steel
Zinc chromate treatment

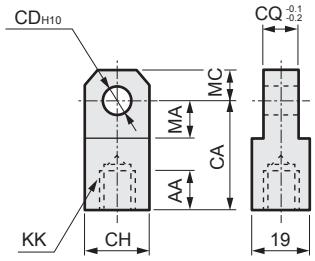

Model No.	Applicable bore size (mm)	AA	CA	CD	CH	CQ	KK	MA	MC	Wt (g)
M1-I-20	20	14	30	10	19	8	M8x1.0	13	10	60
M1-I-30	25/30/32	14	36	12	25	10	M10x1.25	16	12	106
M1-I-40	40	14	36	12	25	10	M12x1.5	16	12	100

● Rod clevis (Y)

Material: Steel
Zinc chromate treatment

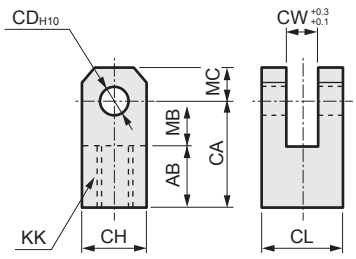

Model No.	Applicable bore size (mm)	AB	CA	CD	CH	CL	CW	KK	MB	MC	Wt (g)
M1-Y-20	20	17	30	10	19	19	8	M8x1.0	13	10	99
M1-Y-30	25/30/32	20	36	12	25	25	10	M10x1.25	16	12	197
M1-Y-40	40	20	36	12	25	25	10	M12x1.5	16	12	193

Note: A pin, a washer and a split pin are attached.

● Clevis bracket (B2)

Material: Steel
Zinc chromate treatment

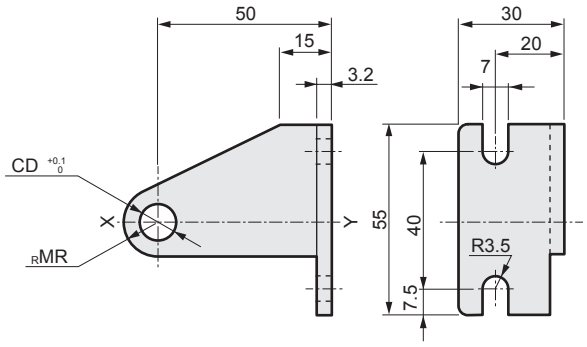

Model No.	Compatibility	Applicable bore size (mm)	CD	MR	Weight (g)
M1-B2-20-CC	JSK2-CC	20/25	8	8	145
M1-B2-30-CC		32	10	11	163
M1-B2-40-CC		40	12	11	170
M1-B2-20-CA	JSK2-CA JSM2-CA	20	10	11	158
M1-B2-30-CA		25/32/40	12	11	162
M1-B2-20-TA	JSK2-TA/TB JSM2-TA/TB	20	8	8	132
M1-B2-30-TA		25/32/40	10	11	142

*1 : One pair is composed of two pieces with XY symmetry.
*2 : The model No. above includes snap rings and pins. 2 pieces are included in a set. (However, the pin and snap rings are not included with the trunnion.)
*3 : For mounting TA, this cannot be attached to the brake section with cover (U).

● Rod clevis pin (P)

Material: Steel
Zinc chromate treatment

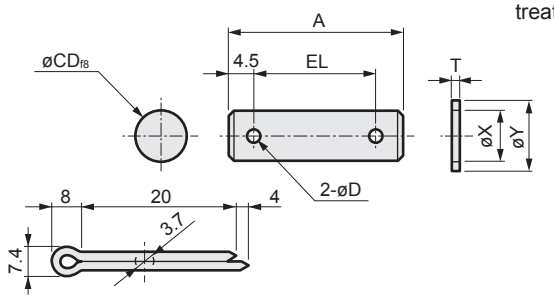

Model No.	Applicable bore size (mm)	A	D	CD	EL	T	X	Y	Weight (g)
M1-P-20	20	37	4	10	28	1.6	10.5	18	29
M1-P-30	25/30/32/40	46	4	12	37	2.5	12.5	22	50

Note: A pin, a washer and a split pin for rod clevis use are attached with the product.

● Clevis bracket pin (P1) (P2)

Material: Steel
Zinc chromate treatment

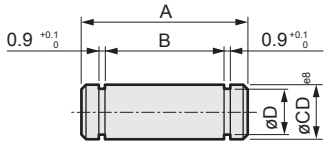

Model No.	Compatible model and bore size (mm)	A	B	CD	D	Applicable snap ring	Weight (g)
M1-P1-20	JSK2-CC-20/25	33	28	8	7	E type 7	13
M1-P1-30	JSK2-CC-32	33	28	10	9	E type 9	21
M1-P1-40	JSK2-CC-40	37	32	12	9	E type 9	32
M1-P2-20	JSK2-CA-20 JSM2-CA-20	25	20	10	9	E type 9	16
M1-P2-30	JSK2-CA-25/32/40 JSM2-CA-30/40	27	22	12	9	E type 9	24

Note: A pin and snap ring for bracket use are attached with the product. (However, the pin and snap rings are not included with the trunnion.)

Pneumatic components

Safety Precautions

Be sure to read this section before use.
Refer to Intro Page 73 for general information of the cylinder, and to Intro Page 80 for general information of the cylinder switch.

Product-specific cautions: Brake cylinder JSK2/JSM2 Series

Design/selection

⚠ WARNING

■ Design a structure that prevents person(s) from coming into contact with the driven workpiece as well as the moving parts of the cylinder with brakes.
Provide a protective cover so that no human body directly touches the unit. In case of possible contact, provide safety measures such as a sensor for emergency stop before making contact and a buzzer to warn of danger.

■ Use a balanced circuit that accommodates the protrusion of the piston rod.
If the cylinder is stopped part-way in the stroke with the brake, etc., and air pressure is applied to one side of the cylinder, the piston rod will pop out at high speeds when the brake is released. This could cause physical harm, such as pinched hands or feet, or mechanical damage. Use a balance circuit, such as the recommended pneumatic pressure circuit, to prevent popping out.

■ The holding force is the ability to hold static load that is not accompanied by vibration or shock, in a state where the brake is operating under no load.
Take care when constantly using near the upper limit of the holding force.

■ Do not apply loads with impact, strong vibration, or torque while brakes are activated.
If load is externally applied with impact, or if strong vibration or rotational force is externally applied, the holding force can be reduced, creating a dangerous situation.

■ Consider the stopping accuracy and overrun distance during the braking.
Because a mechanical lock is applied, the cylinder does not stop instantly when the stop signal is issued, but stops with a time-wise delay. The stroke at which the cylinder slides due to this delay is the overrun distance. The max. and min. width of the overrun distance is the stopping accuracy.
- To achieve the required stop position, move the limit switch forward by the overrun distance.
- The limit switch must have a detection length (dog length) of the overrun distance + α.
- The operating range of CKD cylinder switches is 7 to 16 mm, depending on the switch model. . If overrun distance exceeds this, provide self-holding of the contact at the switch load.

■ In order to improve stopping accuracy, ensure that the brake stops the cylinder as soon as possible after receiving the stop signal.
Use a high response DC control electricity circuit or valve, and set the valve as close to the cylinder as possible.

■ The stopping accuracy is susceptible to fluctuations in piston speed.
If the piston speed changes due to load fluctuations or by some disturbance while the cylinder is moving, the stopping position may vary sharply. Make sure that the piston speed stays the same up to just before the stop position. As well, since the speed changes significantly in the cushioned range and in the acceleration range after starting operation, the variability of the stopping position will increase.
The stopping accuracy with piston speed of 300 mm/s with no load is ±1.0 mm (reference value). This value differs based on the device used. For more information, refer to the page on stopping accuracy and overrun.

■ Do not use multiple synchronized cylinders with brakes. If the synchronization deviates, an excess moment load or load concentration is applied to the cylinder where the brake was applied first, risking brake release defects, shortened service life, or damage.

■ Basic circuit
Always adopt the following circuit even for position locking and emergency stop applications. A 2-position valve cannot be used because it affects the brake section even when the cylinder thrust is stopped.
Maintain thrust and load balance with the following circuit. Brakes may not be released when load is applied to brakes.
- Horizontal load

When piping is as shown in Fig. 1, equal pressure is applied to both ends of the piston when stopped to prevent the rod from popping out when the brakes are released. Install a regulator with check valve on the head side to maintain thrust balance.

Fig.1

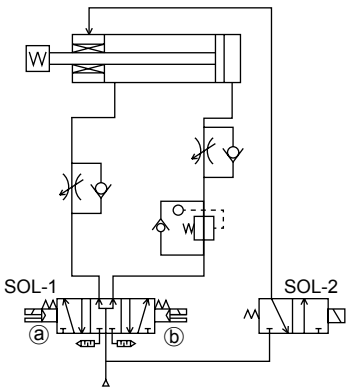

ⓐ SOL-1	ⓑ	SOL-2	Operational status
OFF	OFF	OFF	Stop
ON	OFF	ON	Reverse
OFF	ON	ON	Forward

● For downward vertical load
If load faces downward as shown in Fig. 2, the rod malfunctions in the load direction when brakes are released. Place a regulator with a check valve on the head side to reduce thrust in the load direction and balance the load.

Fig.2

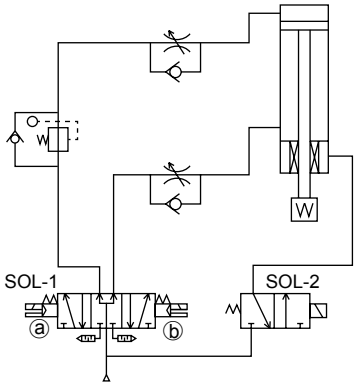

ⓐ SOL-1 ⓑ		SOL-2	Operational status
OFF	OFF	OFF	Stop
ON	OFF	ON	Drop
OFF	ON	ON	Rise

● For upward vertical load
If load faces upward as shown in Fig. 3, the rod malfunctions in the load direction when brakes are released. Place a regulator with a check valve on the rod side to reduce thrust in the load direction and balance the load.

Fig.3

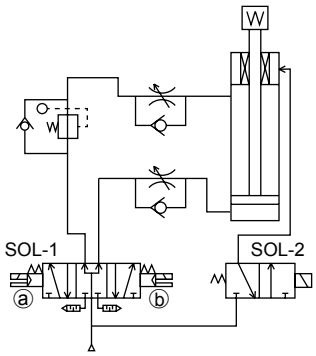

ⓐ SOL-1 ⓑ		SOL-2	Operational status
OFF	OFF	OFF	Stop
ON	OFF	ON	Drop
OFF	ON	ON	Rise

⚠ WARNING

■ Drain

If the piping capacity is larger than the brake release cylinder capacity, the compressed air in the cylinder will not be completely exhausted when switching with the solenoid valve. This compressed air will condense, form water drops, and cause drainage.
Drainage will cause lubricant to flow and cause lubrication faults, temporarily block the passage, corrode the inside of the brakes, cause faulty brake operation, obstruct the stopping accuracy, and/or prevent application or release of the brakes, etc.

Calculate the working compressed air's atmospheric dew point from the scale factor A of the piping capacity with respect to the cylinder capacity. Install a dryer and adjust the air quality so that the value is kept below the following values and drainage is not generated. This can also be done by adjusting the bore size and length of the tube from the release port to the solenoid valve to match the working compressed air's atmospheric dew point so that the following conditions are satisfied.

Magnification A<1 : Atmospheric dew point -20°C or below
1 ≤ Magnification A<2 : Atmospheric dew point -25°C or below
Magnification A ≥ 2 : Atmospheric dew point -30°C or below

Calculation of scale factor A of the piping capacity with respect to the cylinder capacity

$$A=\frac{V_t+V_1}{V_0(10P+1)}$$

V_t : Piping volume (mm^3)
V_0: Brake release cylinder volume (mm^3)
V_1: Brake release cylinder blank volume (mm^3)
P : Working pressure (MPa)

	V_0(mm^3)	V_1(mm^3)
JSK2-20 JSM2-20	754	754
JSK2-25 JSK2-32 JSM2-30	1963	1865
JSK2-40 JSM2-40	4021	3860

Example)JSK2-20, Piping to the brake release port, Tube I.D.: ø4 / length: 1.5 m Operating pressure: 0.5 MPa
Piping volume V_t = Cross-sectional area x length = 4 x 4 x π / 4 x 1500
≈ 18,850 mm^3

$$A=\frac{18850+754}{754\times(10\times0.5+1)}=4.3$$

Adjust the air quality so that the atmospheric dew point is -30°C or below.

● If adjustment is difficult, consider using a cylinder with valve (JSK2-V, JSM2-V).

■ Release brakes before cylinder operation. The brake may not be released when the cylinder is operating at high speed.

■ If back pressure is applied to the locking mechanism, the lock may be released. Use the brake release solenoid valve as a single unit, or use an individual exhaust manifold.

■ Use a 3-position P/A/B connection (pressurization on both sides) solenoid valve for the cylinder drive to prevent the piston from popping out when starting.

■ To maintain balance of the thrust, including the load, the side with the larger thrust should have a regulator with a check valve.

⚠ CAUTION

■ Notes for stopping accuracy

● Stopping pitch and load factor
Stopping accuracy differs with stopping pitch and load factor. The load factor below is recommended for achieving stopping accuracy.
*Stopping accuracy reference value: ±1.0 (300 mm/s, no load)

Stop pitch	Load factor
50 mm or less	20% of thrust
50 mm to 100 mm	40% of thrust
100 mm or more	60% of thrust

● Selection of valve for brake
The stopping accuracy and overrun distance will change according to the responsiveness of the brake valve. Refer to the JSK2-V and JSM2-V brake valve electric specifications. Connect the valve directly to the brake port to improve stopping accuracy.

● When using a PLC (programmable controller)
If a PLC (programmable controller) is used as the electrical control unit for the valve for brake, stopping accuracy drops due to scan time (computing time). When using a PLC, do not assemble the valve for brake into the PLC circuit.

■ Do not make major changes in applied load when stopped with brakes, or the stopping position may change.

■ For a TA mounting, the brake section with cover and the clevis bracket cannot be selected together since they may interfere with each other.

■ Although the contact service life of the reed switch varies depending on usage conditions, it will generally last several million cycles. The contact service life is reached sooner if the device is used continuously or operated at a high frequency. In this case, use a proximity switch with no contact.

Mounting, installation and adjustment

⚠ WARNING

■ Release brakes before coupling the load to the end of the rod.
If coupled while brakes are applied, torque or load exceeding holding force may be applied to the piston rod and damage the brake mechanism.

■ If the brake is released while air is applied to only one side of the cylinder, the piston rod can pop out at high speed, creating a dangerous situation. When releasing the brake during adjustment or other maintenance, always observe the following:
● Check that no one is in the movable range of the load and that no problems will arise if the load moves when brakes are released.
● When releasing the brake, perform position locking or take other measures:
·Place the load to the bottom end
·Pressurize both sides
·Place a strut
to prevent the load from falling.
● Confirm that air is not pressured on only one side of the cylinder when releasing brakes.

■ How to manually release the brake
● When there is no pneumatic source/power supply

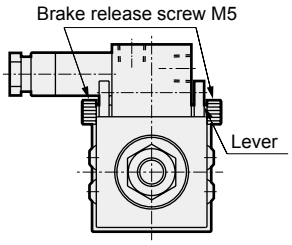

As shown in the above figure, the brakes are released by turning the lever screws on both sides two or three turns past the point where they offer resistance.
Note ① The brake may go out if screwed in too far.
② Always remove the screw during normal operation.

● When manually operating the solenoid valve for the brake (with pneumatic source)

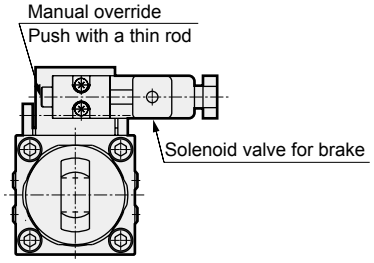

As shown in the above figure, the brakes are released when the manual override on the solenoid valve is pushed with a bar. Note that a non-locking method is incorporated, so the brakes will be applied when the manual device is released.

■ Brakes are released manually or by pressurizing the brake release port. When mounting the load, the brake release operation may cause the load to fall; make sure to check that the brake is operational when the manual release operation is set to default or when there is no air in the brake release port.

■ Do not apply torque to the rod when braking, as the holding force will decrease, creating hazardous conditions. Also, use this product in mechanisms in which the rod does not rotate.

■ Do not apply to the cylinder any force that exceeds the brake holding force listed in the catalog.

■ With the JSM2 Series, the brakes can be manually released by screwing a hexagon socket head cap bolt into the brake release female thread on the side or top of the brakes. However, the brakes may be damaged if the bolt is screwed in too far; use the bolts attached with the product, or if using commercially available bolts, use the appropriate screw insertion depth for the release bolt shown in the table below.

Bore size	No. of bolt rotations
ø20	8 to 9 rotations
ø25	11 to 12 rotations
ø30	
ø32	
ø40	14 to 15 rotations

ø20 to ø40 : Bolts M5 x 15 or over

■ If there is any play, such as looseness, in the brake signal dog, stopping accuracy is affected. Securely fix to eliminate play, etc.

■ If the piston speed is fast, the detection dog must be long enough to match relay response time. If the dog is short, the stop signal is not output and operation does not stop.

⚠ CAUTION

■ Adjust the air balance in the cylinder.
With brakes released, place a load on the cylinder and balance the load by adjusting pneumatic pressure applied to the cylinder rod side and head side. Malfunctions such as piston popping out during brake release or abnormal brake release can be prevented by accurately balancing the load.

■ Adjust the installation position of the detector parts, including the cylinder switch.
When braking, consider the overrun distance vis-a-vis the desired stop position and adjust the installation positions for detector parts, including the cylinder switch.

■ Load fluctuations during the reciprocating stroke of the cylinder can cause inconsistent piston speed, leading to greater variation in the stop position. Adjust the mounting of the load so as to prevent any load fluctuations during the reciprocating stroke of the cylinder, especially before the stop position.

■ Since the speed changes significantly in the cushioned range and in the acceleration range after starting operation, the variability of the stopping position will increase. For this reason, the accuracy described in the specifications may not be obtained when a step just after start of the operation has a short stroke length to the next point.

■ Load to piston rod
Operate the cylinder so that load applied to the piston rod is always applied in the axial direction more strictly than with a general-purpose air cylinder. Limit load movement using guides so play and torsion do not occur.

■ Maintaining the rod sliding parts
Protect the piston rod sliding surface from scratches and dents. Such scratches and dents can cause damage to packings, resulting in leakage and/or brake failure.

■ The terminal box is shipped facing inward (ø20: downward) when shipped to prevent damage. Set it to the orientation to be used when wiring the terminal box.

Use/maintenance

1. Common

⚠ WARNING

■ The brake section can be removed from the cylinder body. Do not disassemble or inspect brakes, or a hazardous situation may occur when brakes are used again.

■ The required grease is applied to brakes. Avoid applying extra grease and do not wipe grease off.

■ The required grease is applied when brakes are replaced, so there is no need to apply grease to rods.

■ Always use the product with the dust cover on, except for when performing manual release, in order to prevent failure or malfunction.

⚠ CAUTION

■ Air supply pipes that are too narrow or too long can reduce stopping accuracy.

■ Frictional resistance increases and causes the piston speed to change when the cylinder has been stopped for a long time, such as when using first thing in the morning or afternoon. This may impair stopping accuracy. Conduct conditioning operations to obtain a stable stopping accuracy.

2. Common (With T type switch)

⚠ CAUTION

■ When moving the switch position to the stroke length direction

● The 1-color display switch can be fine-tuned by ±3 mm from the default. If the adjusting range exceeds ±3 mm, or when fine-tuning the 2-color display switch, move the band position.

● Loosen the switch fixing screw, shift the switch along the rail, then tighten at the specified position.
When using T2, T3, T0, or T5, use a flathead screwdriver (clockwork screwdriver, precision screwdriver, etc.) with a grip diameter of 5 to 6 mm, a 2.4 mm or smaller tip, and a thickness of 0.3 mm or less to tighten the screws with a tightening torque of 0.1 to 0.2 N·m.
When using T*C, T1, T2J, T2Y, T3Y, or T8, tighten the screw with a tightening torque of 0.5 to 0.7 N·m.

● The switch bracket rail has a marking 4 mm from the rail end. Use as a guide to the mounting position when replacing the switch.
Switch rail markings are set to the default switch max. sensitivity position.
The max. sensitivity position will change when the switch is changed or when the band is moved. Adjust the position accordingly in this case.

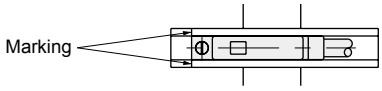

■ When moving the switch position to the circumferential direction

● Loosen the band fixing screw, shift the switch rail in the circumferential direction, then tighten at the specified position. Tightening torque is 0.6 to 0.8N·m.

■ Shifting the band position

● Loosen the band fixing screw, shift the switch rail and band along the cylinder tube, and tighten at the specified position. Tightening torque is 0.6 to 0.8N·m.

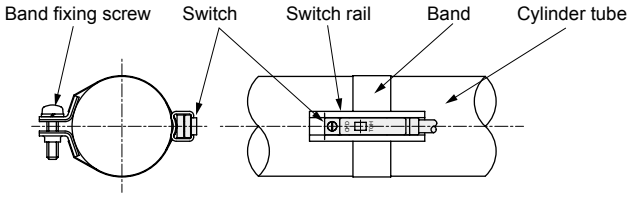

With brake/position locking

JSG

Tie rod cylinder with brake

ø40/ø50/ø63/ø80/ø100

CONTENTS

Product introduction 738
Series variation 740

● Double acting/single rod (JSG) 742
● Double acting/with valve for brake release (JSG-V) 742

JSG Series common dimensions 758
Applications 761
⚠ Safety precautions 762

The cylinder switches T2YH, T2YV, T3YH, and T3YV are scheduled for end of production at the end of December 2023.

Succeeding the outstanding traits of the JSC3.

The JSC3 Series brake mechanism, well known for its high stopping accuracy, strong holding force, and superb reliability, has been mounted as is on the new general cylinder SCG Series.
For the new era: Tie rod cylinder with brake JSG Series. (ø40 to ø100)

Reliable and accomplished brake mechanism

The same mechanism as the popular JSC3 Series has been adopted for the brake section to ensure reliable durability.

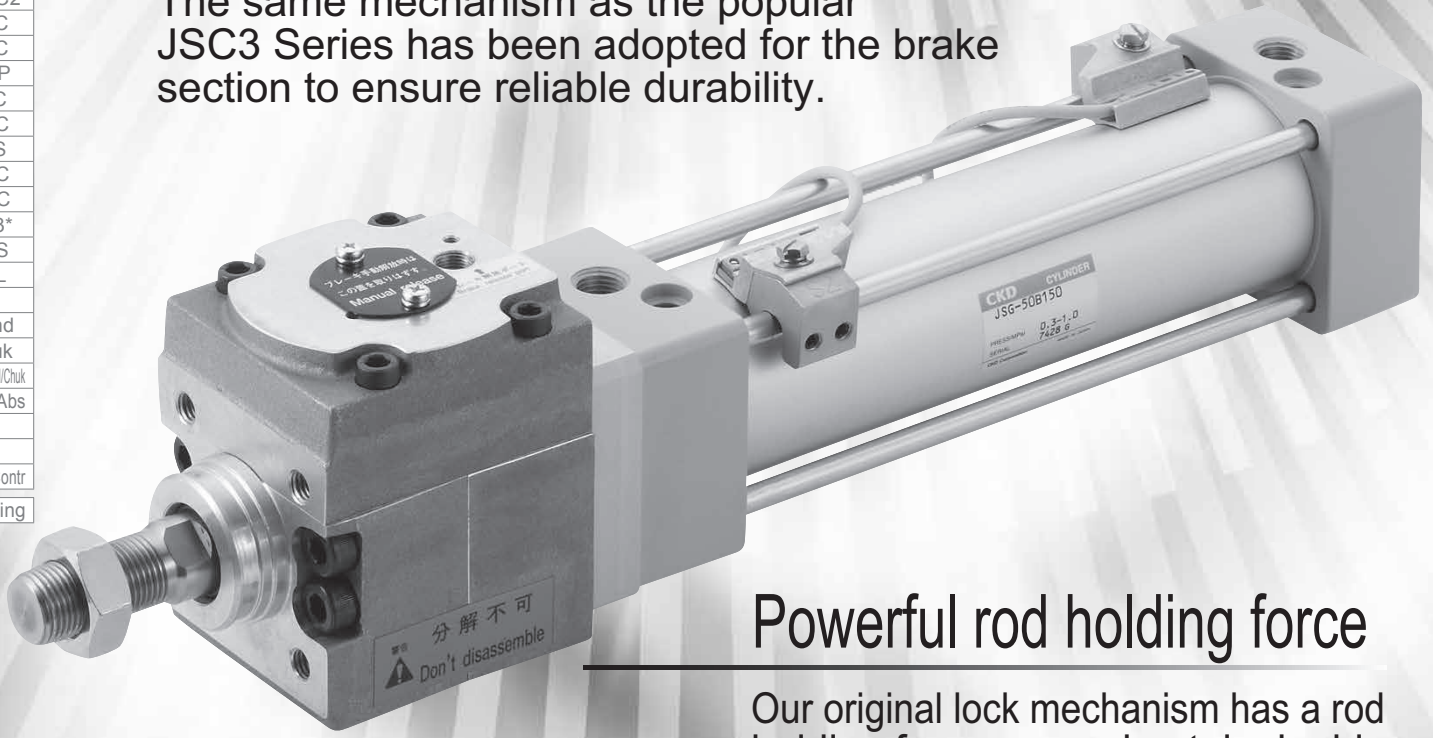

Powerful rod holding force

Our original lock mechanism has a rod holding force approximately double the thrust (at working pressure 0.4MPa).

Evolving into a smaller, easier-to-use cylinder.

JSG Series
Tie-rod cylinder with brake

Compact and reliable brake section

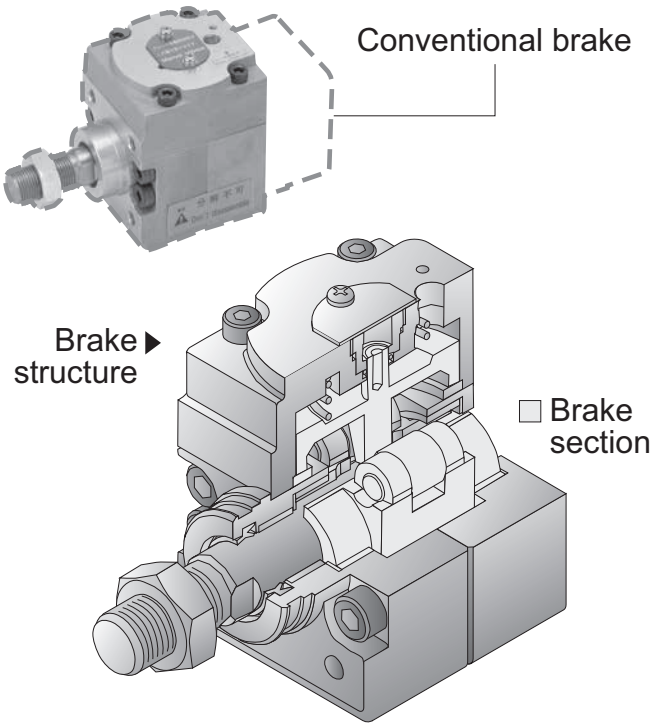

Light weight

The weight has been reduced by an average of 17% compared to the conventional cylinder.

Built-in compact switch

A T-type switch, smaller than the conventional, has been incorporated. This eliminates the protruding switch and saves space when installing.

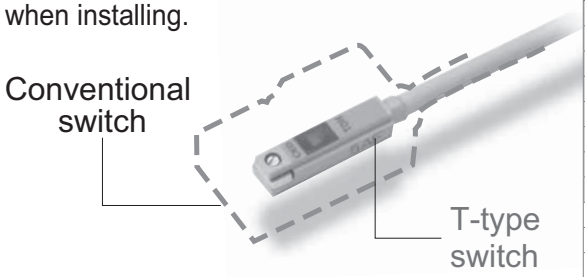

Magnet provided as standard

Switches can be additionally mounted on all products.

Space saving

The overall length of the cylinder has been shortened compared to the conventional JSC3, thereby reducing the installation space.

Unification in white

White has been adopted for the product surface color to match various devices.

■ JSG Series products

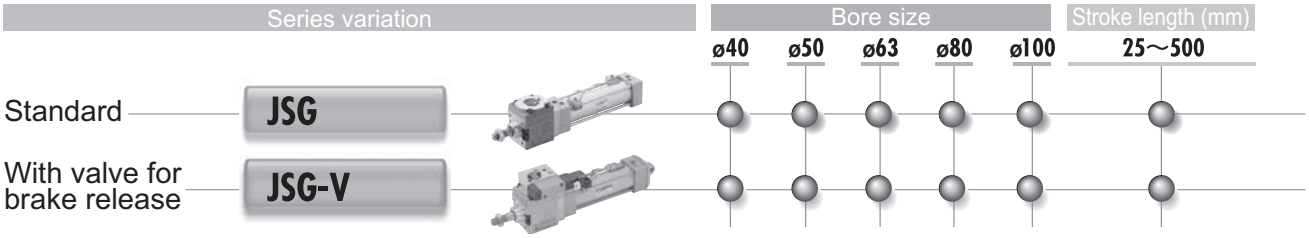

Series variation

Tie rod cylinder with brake JSG Series

Variation	Model No. JIS symbol	Bore size (mm)	Standard stroke (mm)												Min. stroke	
			25	50	75	100	150	200	250	300	350	400	450	500		
Double acting/ single rod	JSG 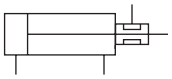	ø40	●	●	●	●	●	●	●	●	●	●	●	●	1	
		ø50/ø63														
		ø80														
		ø100														
Double acting/ with valve for brake release	JSG-V 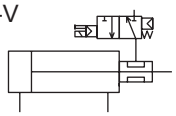	ø40	●	●	●	●	●	●	●	●	●	●	●	●	1	
		ø50/ø63														
		ø80														
		ø100														

●: Standard, ◎: Option, ○: Made to order, ■: Not available

Max. stroke	Available stroke	Custom stroke	Mounting									Cushion		Option		Accessory						Switch	Page
			Basic	Axial foot	Rod side flange	Head side flange	Eye bracket	Clevis bracket	Rod side trunnion	Head side trunnion	Intermediate trunnion	Two-sided air cushion	Two-sided rubber cushion	Bellows (100°C)	Piston rod material stainless steel	Rod eye	Rod clevis	Eye bracket	Clevis bracket	Eye bracket	Trunnion No. 2 bracket		
			00	LB	FA	FB	CA	CB	TA	TB	TC	B	D	J	M	I	Y	B1	B2	B3	B4		
600	800	1	●	●	●	●	●	●	●	●	●	●	◎	◎	◎	◎	◎	◎	◎	◎	◎	◎	742
	1200																						
700	1400																						
800	1500																						
600	800	1	●	●	●	●	●	●	●	●	●	●		◎	◎	◎	◎	◎	◎	◎	◎	◎	742
	1200																						
700	1400																						
800	1500																						

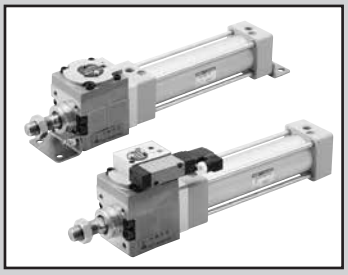

Tie rod cylinder with brake Double acting single rod/double acting with valve for brake release

JSG/JSG-V Series

● Bore size: ø40/ø50/ø63/ø80/ø100

JIS symbol

● Double acting

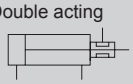

● Double acting, with valve for brake release

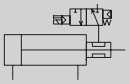

RoHS CAD

Specifications

Item		JSG					JSG-V				
Bore size mm		ø40	ø50	ø63	ø80	ø100	ø40	ø50	ø63	ø80	ø100
Actuation		Double acting					Double acting/with valve				
Working fluid		Compressed air					Compressed air				
Max. working pressure MPa		1.0 (≈150 psi, 10 bar)					0.7 (≈100 psi, 7 bar)				
Min. working pressure MPa		0.3 (≈44 psi, 3 bar)					0.3 (≈44 psi, 3 bar)				
Proof pressure MPa		1.6 (≈230 psi, 16 bar)					1.6 (≈230 psi, 16 bar)				
Ambient temperature °C		-10 (14°F) to 60 (140°F) (no freezing)					-10 (14°F) to 60 (140°F) (no freezing)				
Port size	Brake section	Rc1/8		Rc1/4		Rc3/8	Rc1/8		Rc1/4		
	Cylinder	Rc1/4		Rc3/8		Rc1/2	Rc1/4		Rc3/8		Rc1/2
Stroke tolerance mm	With rubber cushion	$^{+1.4}_{0}$ (to 1000), $^{+1.8}_{0}$ (to 1500)					$^{+1.4}_{0}$ (to 1000), $^{+1.8}_{0}$ (to 1500)				
	With air cushion	$^{+1.0}_{0}$ (to 360), $^{+1.4}_{0}$ (to 1000), $^{+1.8}_{0}$ (to 1500)					$^{+1.0}_{0}$ (to 360), $^{+1.4}_{0}$ (to 1000), $^{+1.8}_{0}$ (to 1500)				
Working piston speed mm/s		50 to 1000 (Operate within the allowable absorbed energy.)					50 to 1000 (Operate within the allowable absorbed energy.)				
Cushion		Either air cushion or rubber cushion can be selected					Either air cushion or rubber cushion can be selected				
Effective air cushion length mm		8.6	13.4	13.4	15.4	15.4	8.6	13.4	13.4	15.4	15.4
Lubrication		Not required (use turbine oil class 1 ISO VG32 if necessary for lubrication)					Not required (use turbine oil class 1 ISO VG32 if necessary for lubrication)				
Holding force N		980	1569	2451	3922	6178	980	1569	2451	3922	6178
Allowable absorbed energy J	With rubber cushion	0.9	1.6	1.6	3.3	5.8	0.9	1.6	1.6	3.3	5.8
	With air cushion	3.7	8.0	14.4	25.4	45.6	3.7	8.0	14.4	25.4	45.6

Electrical specification for brake valve

Item	Specifications		
Rated voltage (V)	100 AC(50/60 Hz)	200 AC(50/60 Hz)	24 DC
Starting current (A)	0.056/0.044	0.028/0.022	0.075
Holding current (A)	0.028/0.022	0.014/0.011	0.075
Power consumption (W)	1.8/1.4		1.8
Thermal class	Class B (molded coil)		

*1 : 100/200 VAC coil is available for 110/220 VAC (60 Hz).
*2 : The valve specifications are the same as those of the standard model 4KB2. For details, refer to “Pneumatic Valves (CB-023SA)”.
Contact CKD when placing an order, as model numbers differ.

Stroke

Bore size (mm)	Standard stroke (mm)	Max. stroke (mm)	Available stroke (mm)	Min. stroke (mm)
ø40	25/50/75/100 150/200/250 300/350/400 450/500	600	800	1
ø50			1200	
ø63				
ø80		700	1400	
ø100		800	1500	

*1 : The custom stroke is available in 1 mm increments.
*2 : If the maximum stroke is exceeded, product specifications may not be met, depending on operating conditions.
Contact CKD in this case.
*3 : The available strokes for models with bellows are as shown below.
ø40: 500 mm
ø50, ø63: 600 mm
ø80, ø100: 750 mm

Min. stroke with switch

● T0/T5 type switch

	Different surface mounting				Same surface mounting				Center trunnion mounting				Rod side trunnion mounting Position cannot be detected at the rod side stroke end.	Head side trunnion mounting No position detection at head side stroke end.
Switch quantity	1	2	3	4	1	2	3	4	1	2	3	4	1	1
ø40	9	18	36	54	9	48(33)	78(64)	109(94)	81(81)	81(81)	164(142)	164(142)	38	38
ø50	9	18	36	54	9	18	36	54	112(112)	112(112)	121(121)	121(121)	51	53
ø63	10	19	38	57	10	19	38	57	85(73)	85(73)	91(91)	91(91)	41	42
ø80	10	20	39	59	10	20	39	59	96(79)	96(79)	99(99)	99(99)	41	47
ø100	10	20	40	60	10	20	40	60	101(84)	101(84)	105(105)	105(105)	47	53

*1: The values in ( ) are of T*V (L-shaped lead wire).
*2: When the stroke is 15 mm or less, the two switches could turn ON at the same time. In this case, adjust switch mounting positions to be as far apart as possible.

● T8 type switch

	Different surface mounting				Same surface mounting				Center trunnion mounting				Rod side trunnion mounting Position cannot be detected at the rod side stroke end.	Head side trunnion mounting No position detection at head side stroke end.
Switch quantity	1	2	3	4	1	2	3	4	1	2	3	4	1	1
ø40	9	18	36	54	9	54(31)	84(62)	115(92)	87(87)	87(87)	178(148)	178(148)	41	41
ø50	9	18	36	54	9	18	36	54	116(116)	116(116)	121(121)	121(121)	54	55
ø63	10	19	38	57	10	19	38	57	89(77)	89(77)	99(99)	99(99)	44	44
ø80	10	20	39	59	10	20	39	59	100(75)	100(75)	111(111)	111(111)	43	49
ø100	10	20	40	60	10	20	40	60	105(80)	105(80)	117(117)	117(117)	49	55

*1: The values in ( ) are of T*V (L-shaped lead wire).
*2: When the stroke is 15 mm or less, the two switches could turn ON at the same time. In this case, adjust switch mounting positions to be as far apart as possible.

● T2/T3 switch

	Different surface mounting				Same surface mounting				Center trunnion mounting				Rod side trunnion mounting Position cannot be detected at the rod side stroke end.	Head side trunnion mounting No position detection at head side stroke end.
Switch quantity	1	2	3	4	1	2	3	4	1	2	3	4	1	1
ø40	5	10	20	30	5	40(33)	70(64)	101(94)	69(60)	69(60)	152(121)	152(121)	32	32
ø50	5	10	20	30	5	10	20	30	71(62)	71(62)	71(61)	71(61)	31	32
ø63	6	11	21	32	6	11	21	32	77(68)	77(68)	77(68)	77(68)	37	38
ø80	6	11	22	33	6	11	22	33	88(79)	88(79)	88(80)	88(80)	37	43
ø100	6	11	22	33	6	11	22	33	93(84)	93(84)	93(85)	93(85)	43	49

*1: The values in ( ) are of T*V (L-shaped lead wire).
*2: When the stroke is 15 mm or less, the two switches could turn ON at the same time. In this case, adjust switch mounting positions to be as far apart as possible.

● T1/T2Y/T3Y/T2W/T3W/T2YD switches

	Different surface mounting				Same surface mounting				Center trunnion mounting				Rod side trunnion mounting Position cannot be detected at the rod side stroke end.	Head side trunnion mounting No position detection at head side stroke end.
Switch quantity	1	2	3	4	1	2	3	4	1	2	3	4	1	1
ø40	6	11	22	33	6	62(49)	92(80)	123(110)	91(66)	91(66)	182(127)	182(127)	43	43
ø50	6	12	24	36	6	12	24	36	93(68)	93(68)	93(68)	93(68)	42	43
ø63	6	12	24	36	6	12	24	36	99(74)	99(74)	99(74)	99(74)	48	49
ø80	7	13	25	38	7	13	25	38	110(85)	110(85)	110(86)	110(86)	48	54
ø100	7	13	26	39	7	13	26	39	115(90)	115(90)	115(92)	115(92)	54	60

*1: The values in ( ) are of T*V (L-shaped lead wire). T2YD does not have a L-shaped lead wire (V).
*2: When the stroke is 15 mm or less, the two switches could turn ON at the same time. In this case, adjust switch mounting positions to be as far apart as possible.

LCM
LCR
LCG
LCW
LCX
STM
STG
STS/STL
STR2
UCA2
ULK*
JSK/M2
JSG
JSC3/JSC4
USSD
UFCD
USC
UB
JSB3
LMB
LML
HCM
HCA
LBC
CAC4
UCAC2
CAC-N
UCAC-N
RCS2
RCC2
PCC
SHC
MCP
GLC
MFC
BBS
RRC
GRC
RV3*
NHS
HRL
LN
Hand
Chuk
MecHnd/Chuk
ShkAbs
FJ
FK
SpdContr
Ending

Switch specifications

● 1-color/2-color LED/for AC magnetic field proof

Item	Proximity 2-wire	Proximity 2-wire			Proximity 3-wire				Reed 2-wire (*4)							Proximity 2-wire
	T1H/ T1V	T2H/T2V/ T2JH/T2JV	T2YH/ T2YV	T2WH/ T2WV	T3H/ T3V	T3PH/ T3PV	T3YH/ T3YV	T3WH/ T3WV	T0H/T0V		T5H/T5V		T8H/T8V			T2YD(*4) T2YDT
Applications	For programmable controller, relay, compact solenoid valve	Dedicated for programmable controller			For programmable controller, relay				For programmable controller, relay		For programmable controller, relay, IC circuit (no indicator lamp), serial connection		For programmable controller, relay			For programmable controller
Output method	-				NPN output	PNP output	NPN output	NPN output	-							
Pwr. supp. V.	-				10 to 28 VDC				-							
Load voltage	85 to 265 VAC	10 to 30 VDC		24 VDC ±10%	30 VDC or less				12/24 VDC	110 VAC	5/12/24 VDC	110 VAC	12/24 VDC	110 VAC	220 VAC	24 VDC ±10%
Load current	5 to 100 mA	5 to 20 mA (*3)			100 mA or less		50 mA or less		5 to 50 mA	7 to 20 mA	≤50 mA	≤20 mA	5 to 50 mA	7 to 20 mA	7 to 10 mA	5 to 20 mA
Indicator	LED (Lit when ON)	LED (Lit when ON)	Red/green LED (Lit when ON)	Red/green LED (Lit when ON)	LED (Lit when ON)	Yellow LED (Lit when ON)	Red/green LED (Lit when ON)	Red/green LED (Lit when ON)	LED (Lit when ON)		No indicator lamp		LED (Lit when ON)			Red/green LED (Lit when ON)
Leakage current	≤ 1 mA at 100 VAC, ≤ 2 mA at 200 VAC	1 mA or less			10 μA or less				0 mA							1 mA or less
Weight g	1 m:33 3 m:87 5 m:142	1 m:18 3 m:49 5 m:80	1 m:33 3 m:87 5 m:142	1 m:18 3 m:49 5 m:80	1 m:18 3 m:49 5 m:80		1 m:33 3 m:87 5 m:142	1 m:18 3 m:49 5 m:80	1 m:18 3 m:49 5 m:80				1 m:33 3 m:87 5 m:142			1 m:61 3 m:166 5 m:272

*1 : Refer to Ending Page 1 for detailed switch specifications and dimensions.
*2 : Switches other than the above models, such as switches with connectors, are also available. Refer to Ending Page 1.
*3 : The max. load current is 20 mA at 25°C. The current is lower than 20 mA if the operating ambient temperature around the switch is higher than 25°C. (5 to 10 mA at 60°C)
*4 : AC magnetic field proof switch (T2YD/T2YDT) cannot be used in DC magnetic fields.

Weight table

Unit: kg

Bore size (mm)	Weight for 0 mm stroke						Added weight /50 mm stroke	Switch weight	Mounting bracket weight	Accessory weight	
	Basic (00)	Foot (LB)	Flange (FA, FB)	Eye bracket (CA)	Clevis bracket (CB)	Trunnion (TA,TB,TC)				I	Y
ø40	1.75	1.89	2.16	1.94	1.94	2.09	0.17	Refer to the weight in the switch specifications.	0.024	0.09	0.14
ø50	2.91	3.07	3.54	3.32	3.32	3.40	0.23		0.022	0.20	0.33
ø63	3.94	4.28	4.96	4.49	4.51	4.82	0.25		0.022	0.20	0.33
ø80	7.81	8.24	9.38	9.08	9.09	9.30	0.40		0.026	0.52	0.96
ø100	12.08	12.94	14.40	13.80	13.83	14.65	0.51		0.024	0.48	0.92

(Example) Product weight of JSG-LB-50B-200-T0H-D-Y

Product weight for stroke 0 mm .....3.07 kg
Additional weight for stroke 200 mm .....0.23×200/50=0.92 kg
Weight of 2 TOH switches .....0.018×2=0.036 kg
Weight of 2 mounting brackets .....0.022×2=0.044 kg
Weight of rod clevis .....0.33 kg
Product weight .....3.07+0.92+0.036+0.044+0.33=4.4 kg

Theoretical thrust table

(Unit: N)

Bore size (mm)	Operating direction	Working pressure MPa							
		0.3	0.4	0.5	0.6	0.7	0.8	0.9	1.0
ø40	Push	3.77×10^2	5.03×10^2	6.28×10^2	7.54×10^2	8.80×10^2	1.01×10^3	1.13×10^3	1.26×10^3
	Pull	3.17×10^2	4.22×10^2	5.28×10^2	6.33×10^2	7.39×10^2	8.44×10^2	9.50×10^2	1.06×10^3
ø50	Push	5.89×10^2	7.85×10^2	9.82×10^2	1.18×10^3	1.37×10^3	1.57×10^3	1.77×10^3	1.96×10^3
	Pull	4.95×10^2	6.60×10^2	8.25×10^2	9.90×10^2	1.15×10^3	1.32×10^3	1.48×10^3	1.65×10^3
ø63	Push	9.35×10^2	1.25×10^3	1.56×10^3	1.87×10^3	2.18×10^3	2.49×10^3	2.81×10^3	3.12×10^3
	Pull	8.41×10^2	1.12×10^3	1.40×10^3	1.68×10^3	1.96×10^3	2.24×10^3	2.52×10^3	2.80×10^3
ø80	Push	1.51×10^3	2.01×10^3	2.51×10^3	3.02×10^3	3.52×10^3	4.02×10^3	4.52×10^3	5.03×10^3
	Pull	1.36×10^3	1.81×10^3	2.27×10^3	2.72×10^3	3.17×10^3	3.63×10^3	4.08×10^3	4.54×10^3
ø100	Push	2.36×10^3	3.14×10^3	3.93×10^3	4.71×10^3	5.50×10^3	6.28×10^3	7.07×10^3	7.85×10^3
	Pull	2.14×10^3	2.86×10^3	3.57×10^3	4.29×10^3	5.00×10^3	5.72×10^3	6.43×10^3	7.15×10^3

How to order

●Without valve

Without switch (built-in magnet for switch)

JSG - LB - 40 ( ) B - 100 ——— J I

With switch (built-in magnet for switch)

JSG - LB - 40 ( ) B - 100 ——— T2H - R - J I

●With valve for brake release

Without switch (built-in magnet for switch)

JSG-V - LB - 40 ( ) B - 100 - 1 ——— J I

With switch (built-in magnet for switch)

JSG-V - LB - 40 ( ) B - 100 - 1 - T2H - R - J I

Ⓐ Model No.
Ⓑ Mounting *1
Ⓒ Bore size
Ⓓ Port thread
Ⓔ Cushion
Ⓕ Stroke
Ⓖ Solenoid valve voltage
Ⓗ Switch model No.
Ⓘ Switch quantity *3
Ⓙ Option
Ⓚ Accessory *4

Code	Description	Ⓐ Model No. Double acting	Double acting, brake release valve -V
Ⓑ Mounting			
00	Basic	●	●
LB	Axial foot	●	●
FA	Rod side flange	●	●
FB	Head side flange	●	●
CA	Eye bracket	●	●
CB	Clevis bracket (pin and split pin attached)	●	●
TA	Rod side trunnion	●	●
TB	Head side trunnion	●	●
TC	Intermediate trunnion	●	●
Ⓒ Bore size (mm)			
40	ø40	●	●
50	ø50	●	●
63	ø63	●	●
80	ø80	●	●
100	ø100	●	●
Ⓓ Port thread			
Blank	Rc thread	●	●
N	NPT thread (made-to-order product)	●	●
G	G thread (made-to-order product)	●	●
Ⓔ Cushion			
B	Two-sided air cushion (basic)	●	●
D	Two-sided rubber cushion	●	●

Note: The rubber cushion has a longer total length than the air cushion.

Ⓕ Stroke (mm)

Bore size	Stroke *2	Available stroke	Custom stroke
ø40	1 to 600	800	In 1 mm increments
ø50		1200	
ø63			
ø80	1 to 700	1400	
ø100	1 to 800	1500	

Ⓖ Solenoid valve voltage			
1	100 VAC		●
2	200 VAC		●
3	24 VDC		●
4	12 VDC		●

Ⓗ Switch model No.

Straight lead wire	L-shaped lead wire	Contact	Voltage AC	Voltage DC	Indicator	Lead wire
T0H*	T0V*	Reed	●	●	1-color LED	2-wire
T5H*	T5V*	Reed	●	●	No indicator lamp	2-wire
T8H*	T8V*	Reed	●	●	1-color LED	2-wire
T1H*	T1V*	Proximity	●		1-color LED	2-wire
T2H*	T2V*	Proximity		●	1-color LED	2-wire
T3H*	T3V*	Proximity		●		3-wire
T3PH*	T3PV*	Proximity		●	1-color LED	3-wire
T2WH*	T2WV*	Proximity		●	2-color LED	2-wire
T2YH*	T2YV*	Proximity		●		
T3WH*	T3WV*	Proximity		●		3-wire
T3YH*	T3YV*	Proximity		●		
T2YD*	-	Proximity		●	2-color LED AC magnetic field	2-wire
T2YDT*	-	Proximity		●		
T2JH*	T2JV*	Proximity		●	1-color LED off-delay	2-wire

*** Lead wire length**			
Blank	1 m (standard)	●	●
3	3 m (option)	●	●
5	5 m (option)	●	●
Ⓘ Switch quantity			
R	1 on rod side	●	●
H	1 on head side	●	●
D	2	●	●
T	3	●	●

Ⓙ Option

		Max. ambient temperature	Instantaneous ambient temperature		
J	Bellows	100°C	200°C	●	●
M	Piston rod material stainless steel			●	●

Ⓚ Accessory			
I	Rod eye	●	●
Y	Rod clevis (pin and split pin attached)	●	●
B1	Eye bracket	●	●
B2	Clevis bracket (pin and split pin attached)	●	●
B3	Eye bracket	●	●
B4	Trunnion No. 2 bracket (2 pcs./set)	●	●

⚠ Precautions for model No. selection

*1 : Mounting bracket will be shipped with the product. (Trunnion is assembled at shipment.)
*2 : The custom stroke is available in 1 mm increments.
*3 : When selecting TA or TB as mounting, the number of switches is limited to "H" (1 on head side) for TA, and "R" (1 on rod side) for TB.
*4 : "I" and "Y" cannot be selected together.

[Example of model No.]

JSG-V-LB-40B-100-1-T2H-D-JI

Model: Tie rod cylinder with brake

Ⓐ Model No. : Double acting, with valve for brake release
Ⓑ Mounting : Axial foot
Ⓒ Bore size : ø40 mm
Ⓓ Port thread : Rc thread
Ⓔ Cushion : With two-sided air cushion
Ⓕ Stroke : 100 mm
Ⓖ Solenoid valve voltage : 100 VAC
Ⓗ Switch model No. : Proximity T2H switch, lead wire 1 m
Ⓘ Switch quantity : 2
Ⓙ Option : With bellows
Ⓚ Accessory : Rod eye (included)

LCM
LCR
LCG
LCW
LCX
STM
STG
STS/STL
STR2
UCA2
ULK*
JSK/M2
JSG
JSC3/JSC4
USSD
UFCD
USC
UB
JSB3
LMB
LML
HCM
HCA
LBC
CAC4
UCAC2
CAC-N
UCAC-N
RCS2
RCC2
PCC
SHC
MCP
GLC
MFC
BBS
RRC
GRC
RV3*
NHS
HRL
LN
Hand
Chuk
MecHnd/Chuk
ShkAbs
FJ
FK
SpdContr
Ending

How to order switch

● Switch body + mounting bracket set

SCG - T0H - 40

- T0H: Switch model No. (Item Ⓗ on page 745)
- 40: Bore size (Item Ⓒ on page 745)

● Switch body only

SW - T0H

- T0H: Switch model No. (Item Ⓗ on page 745)

Note: Contact CKD when using an environment-friendly T-switch.

● Switch mounting bracket set

SCG - T - 40

- T: Mounting bracket
- 40: Bore size (Item Ⓒ on page 745)

How to order mounting bracket

Bore size (mm) / Mounting bracket	ø40	ø50	ø63	ø80	ø100
Foot (LB) *1	JSG-LB-40	JSG-LB-50	JSG-LB-63	SCG-LB-80	SCG-LB-100
Flange (FA) (FB) *2	JSG-FA-40	JSG-FA-50	JSG-FA-63	SCG-FA-80	SCG-FA-100
Eye bracket (CA)	SCG-CA-40	SCG-CA-50	SCG-CA-63	SCG-CA-80	SCG-CA-100
Clevis bracket (CB) *3	SCG-CB-40	SCG-CB-50	SCG-CB-63	SCG-CB-80	SCG-CB-100

*1: The foot (LB) mounting bracket is provided as 2 pcs./set.
*2: Specify the flange (FA) with bellows as “JSG-FA-(bore size)-J”.
*3: Pin, split pin and plain washer are attached.
*4: All mounting brackets have mounting bolts attached.

How to release the brake section manually

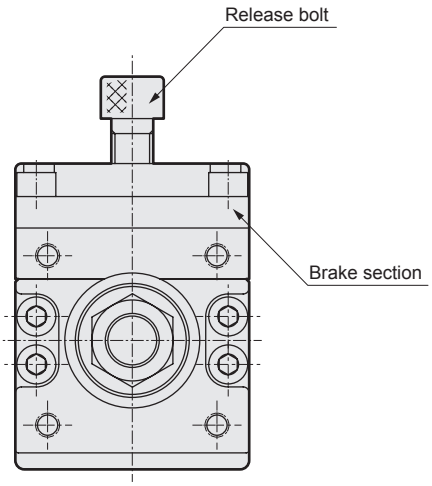

The brakes are released by screwing a bolt into the manual release port (female threads on top of brakes).
(The brake may go out if the bolt is screwed in too far.
Refer to the appropriate screw-in volume in the table below.)
Always remove the bolt during normal use.

Release bolt size

Bore size	Bolt screw diameter	Bolt length		Appropriate screw-in volume
		JSG	JSG-V	
ø40	M12×1.75	16 or more	40 or more	3 rotations or less
ø50	M12×1.75	16 or more	40 or more	4 rotations or less
ø63	M14×2	16 or more	40 or more	4 rotations or less
ø80	M16×2	20 or more	40 or more	4.5 rotations or less
ø100	M18×2.5	20 or more	50 or more	5 rotations or less

Internal structure and parts list

● JSG

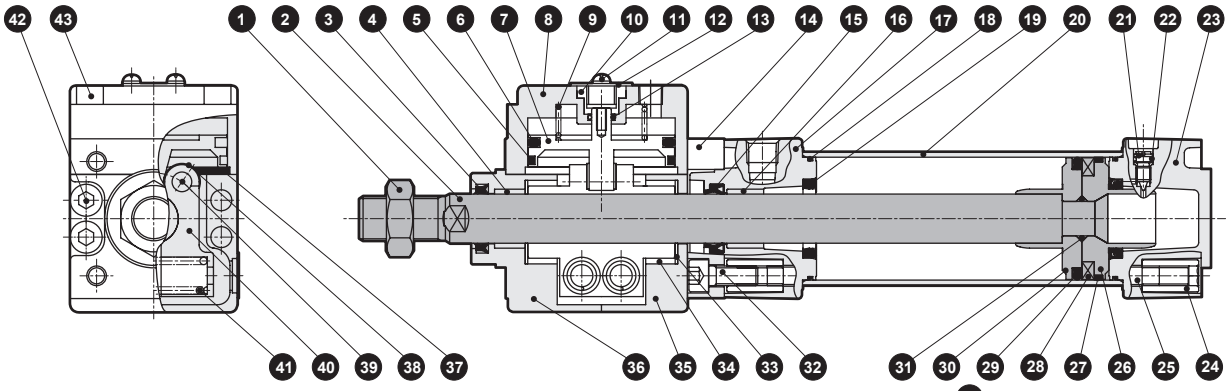

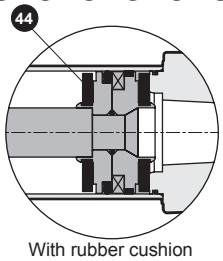

With rubber cushion

Brake section cannot be disassembled

No.	Part name	Material	Remarks	No.	Part name	Material	Remarks
1	Rod nut	Steel	Nickel plating	24	Round nut	Steel	Zinc chromate
2	Piston rod	Steel	Industrial chrome plating	25	Tie rod	Steel	Zinc chromate
3	Dust wiper	Nitrile rubber		26	Piston H	ø40: Aluminum alloy ø50 to ø100: Aluminum alloy die-casting	
4	Bush	Oil impregnated bearing alloy					
5	Wear ring	Acetal resin		27	Wear ring	Polyacetal resin	
6	Piston packing B	Nitrile rubber		28	Magnet	Resin	
7	Brake piston	Cast iron	Phosphate coating	29	Piston packing	Nitrile rubber	
8	Body H	Aluminum casting	Chromate	30	Piston R	ø40: Aluminum alloy ø50 to ø100: Aluminum alloy die-casting	
9	Spring	Piano wire					
10	Piston guide	Cast iron	Phosphate coating	31	Piston gasket	Nitrile rubber	
11	Phillips pan head machine screw/captive washer	Steel	Zinc chromate	32	Hexagon socket head cap screw	Alloy steel	Black finish
12	Dust cover	Aluminum alloy	Alumite	33	Thrust washer		
13	Gasket	Nitrile rubber		34	Bush	Dry bearing	
14	Joint plate	Aluminum alloy	Alumite	35	Body R	Aluminum casting	Chromate
15	Rod packing	Nitrile rubber		36	Body F	Aluminum casting	Chromate
16	Bush	Oil impregnated bearing alloy		37	Cushion rubber	Urethane rubber	
17	Rod cover	Aluminum alloy die-casting	Paint	38	Bearing		
18	Cylinder gasket	Nitrile rubber		39	Pin	Alloy steel	
19	Cushion packing	Nitrile rubber, steel	Zinc chromate	40	Brake shoe metal	Cast iron	Nickel plating
20	Cylinder tube	Aluminum alloy	Hard alumite	41	Spring	Piano wire	
21	Cushion needle	Copper alloy	Nickel plating	42	Hexagon socket head cap screw	Alloy steel	Black finish
22	Needle gasket	Nitrile rubber		43	Hexagon socket head cap screw	Alloy steel	Black finish
23	Head cover	Aluminum alloy die-casting	Paint	44	Cushion rubber	Urethane rubber	

Note: Never disassemble the brake section, as the powerful spring installed can be dangerous.

Repair parts list

● With air cushion

Bore size (mm)	Kit No.	Repair parts No.
ø40	JSG-40BK	3 15 18 19 22 27 29
ø50	JSG-50BK	
ø63	JSG-63BK	
ø80	JSG-80BK	
ø100	JSG-100BK	

Note: Specify the kit No. when placing an order.

● With rubber cushion

Bore size (mm)	Kit No.	Repair parts No.
ø40	JSG-40DK	3 15 18 22 27 29 44
ø50	JSG-50DK	
ø63	JSG-63DK	
ø80	JSG-80DK	
ø100	JSG-100DK	

Note: Specify the kit No. when placing an order.

Material of mounting bracket

Mounting	Material	Remarks
LB	Steel	Nickel plating
FA/FB	Steel	Paint
CA/CB	Cast iron	Paint
TA/TB/TC	Cast iron	Paint

LCM
LCR
LCG
LCW
LCX
STM
STG
STS/STL
STR2
UCA2
ULK*
JSK/M2
JSG
JSC3/JSC4
USSD
UFCD
USC
UB
JSB3
LMB
LML
HCM
HCA
LBC
CAC4
UCAC2
CAC-N
UCAC-N
RCS2
RCC2
PCC
SHC
MCP
GLC
MFC
BBS
RRC
GRC
RV3*
NHS
HRL
LN
Hand
Chuk
MecHnd/Chuk
ShkAbs
FJ
FK
SpdContr
Ending

Dimensions CAD

● Basic (00)

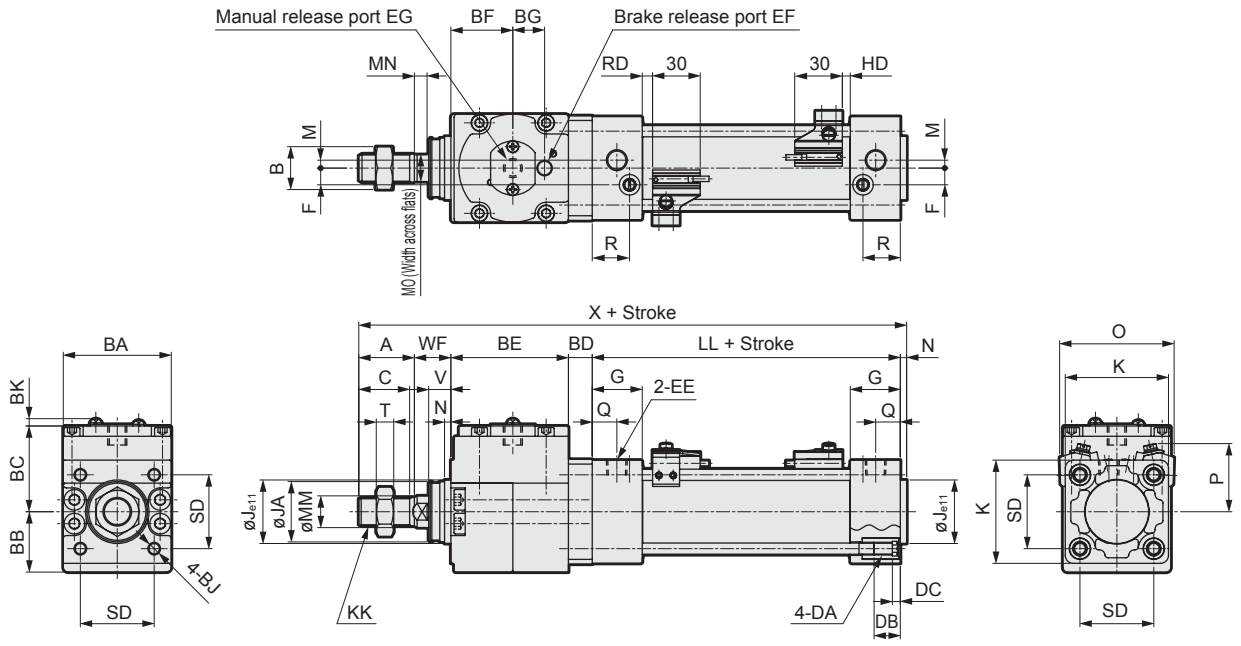

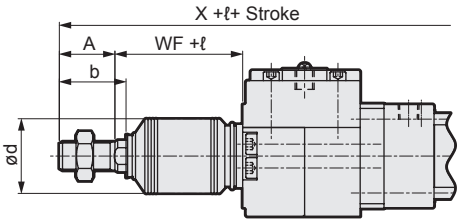

[With bellows]

*1: Dimensions in ( ) are for the rubber cushion.
*2: Refer to page 758 for RD, HD and protruding dimensions of other switches.
*3: Refer to page 757 for dimensions of type with valves (JSG-V).

Code / Bore size (mm)	Basic (00) basic dimensions																						
	A	B	BA	BB	BC	BD	BE	BF	BG	BJ	BK	C	DA	DB	DC	EE	EF	EG	F	G	J	JA	K
ø40	30	22	57	31.5	46.5	14	63	32.5	20	M6 Depth 12	4.6	27	M6	16	5	Rc1/4	Rc1/8	M12	9	27	35	31	52
ø50	35	27	68	38	54	15	74	39	20	M8 Depth 12	4.6	32	M8	16	5	Rc1/4	Rc1/8	M12	10.5	31.5	40	38	65
ø63	35	27	78	43	59	15	88	44.5	27	M8 Depth 14	4.6	32	M8	16	5	Rc3/8	Rc1/4	M14	12	31.5	45	38	75
ø80	40	32	98	53	72.5	23	108	54.5	27	M10 Depth 16	4.6	37	M10	16	5	Rc3/8	Rc1/4	M16	14	38	45	43	95
ø100	40	41	118	63	80.5	22.5	128.5	65.5	35	M10 Depth 18	4.6	37	M10	16	5	Rc1/2	Rc3/8	M18	15	38	55	51	114

Code / Bore size (mm)																With switch					
	KK	*1 LL	M	MM	MN	MO	N	Q	R	SD	T	V	WF	*1 X	O	P	T0, T5, T2, T3, T3P		T2W, T3W	
																	RD	HD	RD	HD
ø40	M14×1.5	84(90)	4	16	6	14	4	14	19	38	8	13	21	216(222)	66	41	5(8)	5(8)	7.5(10.5)	7.5(10.5)
ø50	M18×1.5	94(102)	5	20	8	17	4	15.5	23.5	46.5	11	14	23	245(253)	72	43	6.5(10.5)	5(9)	9(13)	7(11)
ø63	M18×1.5	94(102)	9	20	8	17	4	16.5	21.5	56.5	11	14	23	259(267)	83	48	6.5(10.5)	5(9)	9(13)	7(11)
ø80	M22×1.5	114(124)	11.5	25	11	22	4	19	28	72	13	20	32	321(331)	104	57	12.5(17.5)	6(11)	15(20)	8(13)
ø100	M26×1.5	114(124)	17	30	13	27	4	19	28	89	16	20	32	341(351)	121	63	12(17)	6.5(11.5)	14.5(19.5)	8.5(13.5)

Code / Bore size (mm)	With bellows																
	A	b	d	WF	ℓ												
					50 or less	Over 50 to 100	Over 100 to 150	Over 150 to 200	Over 200 to 300	Over 300 to 400	Over 400 to 500	Over 500 to 600	Over 600 to 700	Over 700 to 750	Over 750 to 800	Over 800	
ø40	30	35	40	21	30	43	55	68	93	118	143	0.35 x stroke-32					
ø50	35	42	47	23	31	44	56	69	94	119	144	169	0.35 x stroke-41				
ø63	35	42	47	23	31	44	56	69	94	119	144	169	0.35 x stroke-41				
ø80	40	50	53	32	29	42	54	67	92	117	142	167	192	204	217	0.35 x stroke-63	
ø100	40	52.5	61	32	29	42	54	67	92	117	142	167	192	204	217	0.35 x stroke-63	

Dimensions

● Axial foot (LB)

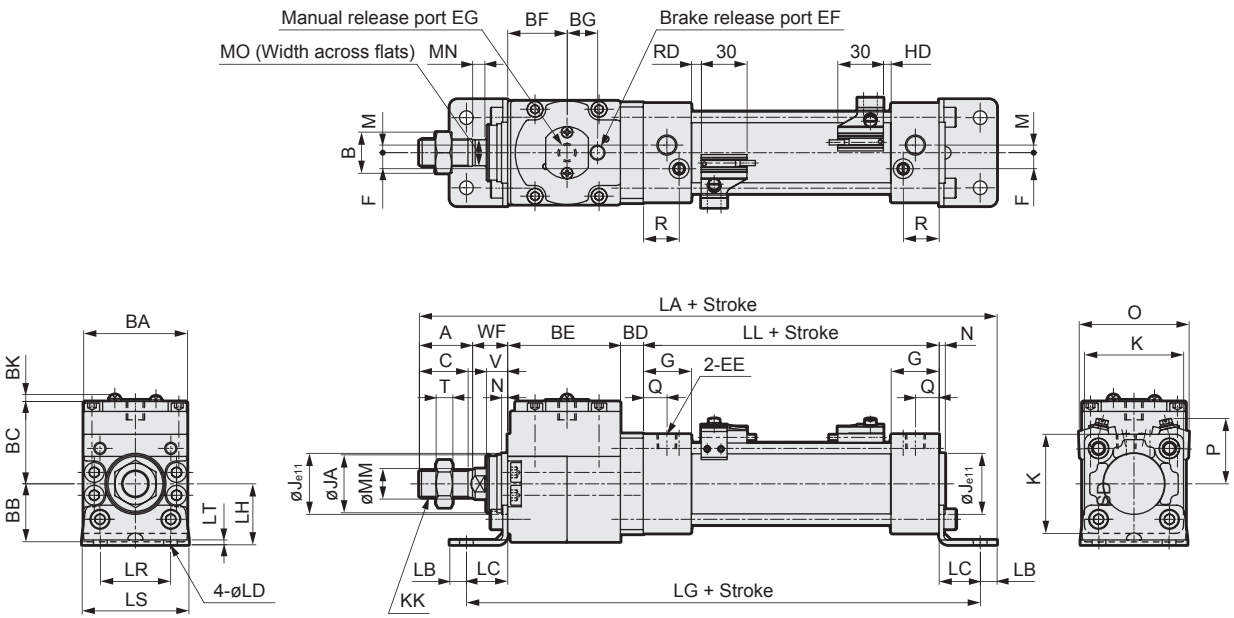

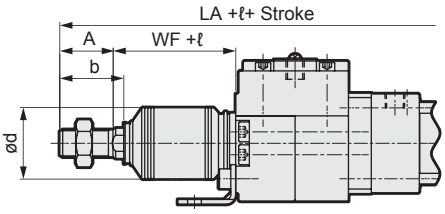

[With bellows]

*1: Dimensions in ( ) are for the rubber cushion.
*2: Refer to page 758 for RD, HD and protruding dimensions of other switches.
*3: Refer to page 757 for dimensions of type with valves (JSG-V).

Code / Bore size (mm)	Axial foot (LB) basic dimensions																								
	A	B	BA	BB	BC	BD	BE	BF	BG	BK	C	EE	EF	EG	F	G	J	JA	K	KK	*1 LL	M	MM	MN	MO
ø40	30	22	57	31.5	46.5	14	63	32.5	20	4.6	27	Rc1/4	Rc1/8	M12	9	27	35	31	52	M14×1.5	84(90)	4	16	6	14
ø50	35	27	68	38	54	15	74	39	20	4.6	32	Rc1/4	Rc1/8	M12	10.5	31.5	40	38	65	M18×1.5	94(102)	5	20	8	17
ø63	35	27	78	43	59	15	88	44.5	27	4.6	32	Rc3/8	Rc1/4	M14	12	31.5	45	38	75	M18×1.5	94(102)	9	20	8	17
ø80	40	32	98	53	72.5	23	108	54.5	27	4.6	37	Rc3/8	Rc1/4	M16	14	38	45	43	95	M22×1.5	114(124)	11.5	25	11	22
ø100	40	41	118	63	80.5	22.5	128.5	65.5	35	4.6	37	Rc1/2	Rc3/8	M18	15	38	55	51	114	M26×1.5	114(124)	17	30	13	27

Code / Bore size (mm)	Mounting dimensions															With switch					
	N	Q	R	T	V	WF	*1 LA	LB	LC	LD	*1 LG	LH	LR	LS	LT	O	P	T0, T5, T2, T3, T3P		T2W, T3W	
																		RD	HD	RD	HD
ø40	4	14	19	8	13	21	247(253)	11	24	9	209(215)	33	38	55	3.2	66	41	5(8)	5(8)	7.5(10.5)	7.5(10.5)
ø50	4	15.5	23.5	11	14	23	279(287)	11	27	9	237(245)	40	46	70	3.2	72	43	6.5(10.5)	5(9)	9(13)	7(11)
ø63	4	16.5	21.5	11	14	23	296(304)	14	27	12	251(259)	48	56	80	4.5	83	48	6.5(10.5)	5(9)	9(13)	7(11)
ø80	4	19	28	13	20	32	361(371)	14	30	12	305(315)	55	72	95	4.5	104	57	12.5(17.5)	6(11)	15(20)	8(13)
ø100	4	19	28	16	20	32	385(395)	16	32	14	329(339)	65	89	114	6	121	63	12(17)	6.5(11.5)	14.5(19.5)	8.5(13.5)

Code / Bore size (mm)	With bellows															
	A	b	d	WF	ℓ											
					50 or less	Over 50 to 100	Over 100 to 150	Over 150 to 200	Over 200 to 300	Over 300 to 400	Over 400 to 500	Over 500 to 600	Over 600 to 700	Over 700 to 750	Over 750 to 800	Over 800
ø40	30	35	40	21	30	43	55	68	93	118	143	0.35 x stroke-32				
ø50	35	42	47	23	31	44	56	69	94	119	144	169	0.35 x stroke-41			
ø63	35	42	47	23	31	44	56	69	94	119	144	169	0.35 x stroke-41			
ø80	40	50	53	32	29	42	54	67	92	117	142	167	192	204	217	0.35 x stroke-63
ø100	40	52.5	61	32	29	42	54	67	92	117	142	167	192	204	217	0.35 x stroke-63

LCM
LCR
LCG
LCW
LCX
STM
STG
STS/STL
STR2
UCA2
ULK*
JSK/M2
JSG
JSC3/JSC4
USSD
UFCD
USC
UB
JSB3
LMB
LML
HCM
HCA
LBC
CAC4
UCAC2
CAC-N
UCAC-N
RCS2
RCC2
PCC
SHC
MCP
GLC
MFC
BBS
RRC
GRC
RV3*
NHS
HRL
LN
Hand
Chuk
MecHnd/Chuk
ShkAbs
FJ
FK
SpdContr
Ending

Dimensions

● Rod side flange (FA)

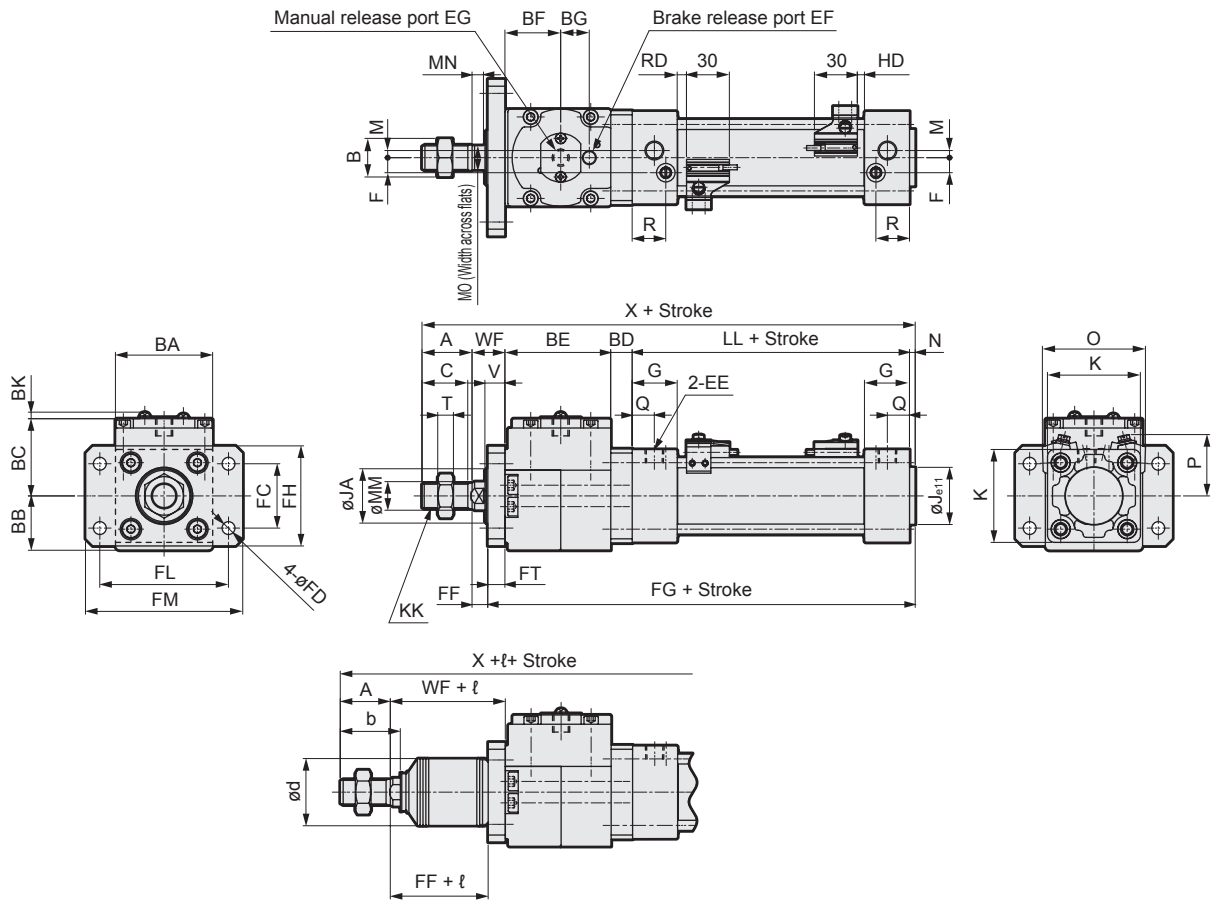

[With bellows]

*1: Dimensions in ( ) are for the rubber cushion.
*2: Refer to page 758 for RD, HD and protruding dimensions of other switches.
*3: Refer to page 757 for dimensions of type with valves (JSG-V).

Code / Bore size (mm)	Rod side flange (FA) basic dimensions																							
	A	B	BA	BB	BC	BD	BE	BF	BG	BK	C	EE	EF	EG	F	G	J	JA	K	KK	*1 LL	M	MM	MN	MO
ø40	30	22	57	31.5	46.5	14	63	32.5	20	4.6	27	Rc1/4	Rc1/8	M12	9	27	35	31	52	M14×1.5	84(90)	4	16	6	14
ø50	35	27	68	38	54	15	74	39	20	4.6	32	Rc1/4	Rc1/8	M12	10.5	31.5	40	38	65	M18×1.5	94(102)	5	20	8	17
ø63	35	27	78	43	59	15	88	44.5	27	4.6	32	Rc3/8	Rc1/4	M14	12	31.5	45	38	75	M18×1.5	94(102)	9	20	8	17
ø80	40	32	98	53	72.5	23	108	54.5	27	4.6	37	Rc3/8	Rc1/4	M16	14	38	45	43	95	M22×1.5	114(124)	11.5	25	11	22
ø100	40	41	118	63	80.5	22.5	128.5	65.5	35	4.6	37	Rc1/2	Rc3/8	M18	15	38	55	51	114	M26×1.5	114(124)	17	30	13	27

Code / Bore size (mm)								Mounting dimensions								With switch					
	N	Q	R	T	V	WF	*1 X	FC	FD	FF	*1 FG	FH	FL	FM	FT	O	P	T0, T5, T2, T3, T3P RD	T0, T5, T2, T3, T3P HD	T2W, T3W RD	T2W, T3W HD
ø40	4	14	19	8	13	21	216(222)	46	9	11	175(181)	65	83	101	10	66	41	5(8)	5(8)	7.5(10.5)	7.5(10.5)
ø50	4	15.5	23.5	11	14	23	245(253)	52	9	11	199(207)	77	100	120	12	72	43	6.5(10.5)	5(9)	9(13)	7(11)
ø63	4	16.5	21.5	11	14	23	259(267)	62	9	11	213(221)	92	115	135	12	83	48	6.5(10.5)	5(9)	9(13)	7(11)
ø80	4	19	28	13	20	32	321(331)	63	12	16	265(275)	100	126	153	16	104	57	12.5(17.5)	6(11)	15(20)	8(13)
ø100	4	19	28	16	20	32	341(351)	75	14	16	285(295)	120	150	178	16	121	63	12(17)	6.5(11.5)	14.5(19.5)	8.5(13.5)

Code / Bore size (mm)	With bellows															
	A	b	d	WF	ℓ											
					50 or less	Over 50 to 100	Over 100 to 150	Over 150 to 200	Over 200 to 300	Over 300 to 400	Over 400 to 500	Over 500 to 600	Over 600 to 700	Over 700 to 750	Over 750 to 800	Over 800
ø40	30	35	40	21	30	43	55	68	93	118	143	0.35 x stroke-32				
ø50	35	42	47	23	31	44	56	69	94	119	144	169	0.35 x stroke-41			
ø63	35	42	47	23	31	44	56	69	94	119	144	169	0.35 x stroke-41			
ø80	40	50	53	32	29	42	54	67	92	117	142	167	192	204	217	0.35 x stroke-63
ø100	40	52.5	61	32	29	42	54	67	92	117	142	167	192	204	217	0.35 x stroke-63

Dimensions

● Head side flange (FB)

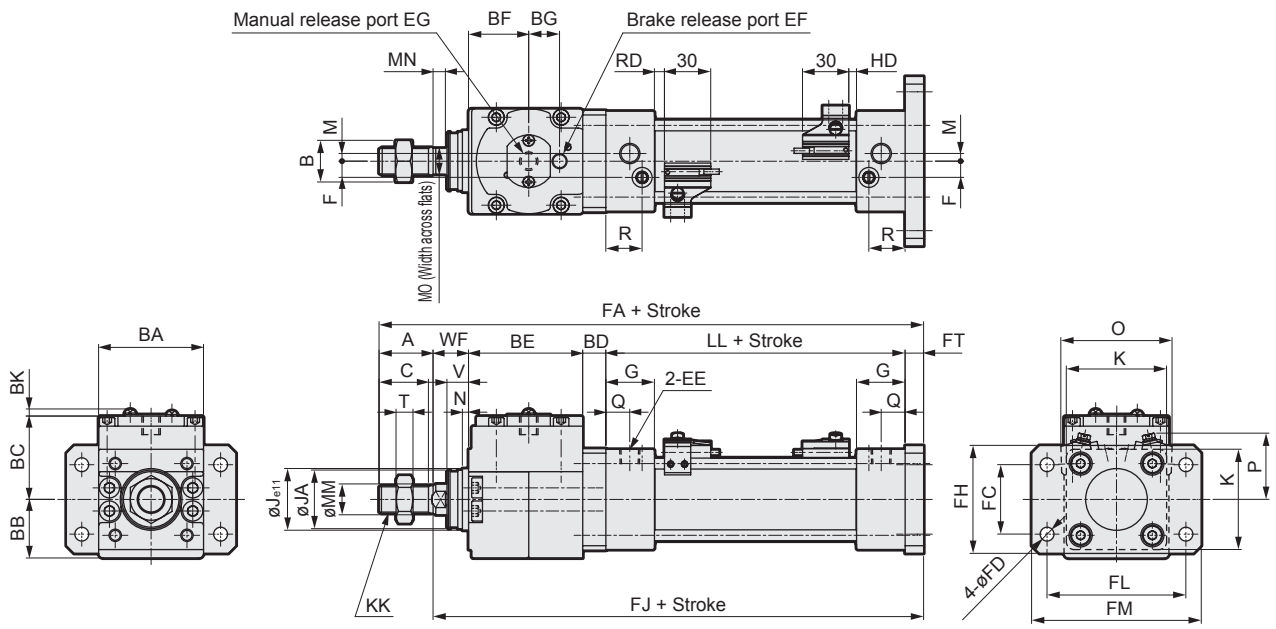

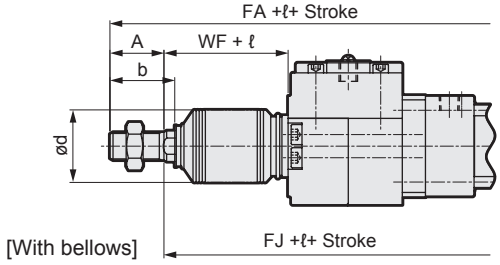

[With bellows]

*1: Dimensions in ( ) are for the rubber cushion.
*2: Refer to page 758 for RD, HD and protruding dimensions of other switches.
*3: Refer to page 757 for dimensions of type with valves (JSG-V).

Code / Bore size (mm)	Head side flange (FB) basic dimensions																								
	A	B	BA	BB	BC	BD	BE	BF	BG	BK	C	EE	EF	EG	F	G	J	JA	K	KK	*1 LL	M	MM	MN	MO
ø40	30	22	57	31.5	46.5	14	63	32.5	20	4.6	27	Rc1/4	Rc1/8	M12	9	27	35	31	52	M14×1.5	84(90)	4	16	6	14
ø50	35	27	68	38	54	15	74	39	20	4.6	32	Rc1/4	Rc1/8	M12	10.5	31.5	40	38	65	M18×1.5	94(102)	5	20	8	17
ø63	35	27	78	43	59	15	88	44.5	27	4.6	32	Rc3/8	Rc1/4	M14	12	31.5	45	38	75	M18×1.5	94(102)	9	20	8	17
ø80	40	32	98	53	72.5	23	108	54.5	27	4.6	37	Rc3/8	Rc1/4	M16	14	38	45	43	95	M22×1.5	114(124)	11.5	25	11	22
ø100	40	41	118	63	80.5	22.5	128.5	65.5	35	4.6	37	Rc1/2	Rc3/8	M18	15	38	55	51	114	M26×1.5	114(124)	17	30	13	27

Code / Bore size (mm)							Mounting dimensions								With switch					
	N	Q	R	T	V	WF	*1 FA	FC	FD	FH	*1 FJ	FL	FM	FT	O	P	T0,T5,T2,T3,T3P RD	T0,T5,T2,T3,T3P HD	T2W,T3W RD	T2W,T3W HD
ø40	4	14	19	8	13	21	222(228)	46	9	65	192(198)	83	101	10	66	41	5(8)	5(8)	7.5(10.5)	7.5(10.5)
ø50	4	15.5	23.5	11	14	23	253(261)	52	9	77	218(226)	100	120	12	72	43	6.5(10.5)	5(9)	9(13)	7(11)
ø63	4	16.5	21.5	11	14	23	267(275)	62	9	92	232(240)	115	135	12	83	48	6.5(10.5)	5(9)	9(13)	7(11)
ø80	4	19	28	13	20	32	333(343)	63	12	100	293(303)	126	153	16	104	57	12.5(17.5)	6(11)	15(20)	8(13)
ø100	4	19	28	16	20	32	353(363)	75	14	120	313(323)	150	178	16	121	63	12(17)	6.5(11.5)	14.5(19.5)	8.5(13.5)

Code / Bore size (mm)	With bellows															
	A	b	d	WF	ℓ											
					50 or less	Over 50 to 100	Over 100 to 150	Over 150 to 200	Over 200 to 300	Over 300 to 400	Over 400 to 500	Over 500 to 600	Over 600 to 700	Over 700 to 750	Over 750 to 800	Over 800
ø40	30	35	40	21	30	43	55	68	93	118	143	0.35 x stroke-32				
ø50	35	42	47	23	31	44	56	69	94	119	144	169	0.35 x stroke-41			
ø63	35	42	47	23	31	44	56	69	94	119	144	169	0.35 x stroke-41			
ø80	40	50	53	32	29	42	54	67	92	117	142	167	192	204	217	0.35 x stroke-63
ø100	40	52.5	61	32	29	42	54	67	92	117	142	167	192	204	217	0.35 x stroke-63

LCM
LCR
LCG
LCW
LCX
STM
STG
STS/STL
STR2
UCA2
ULK*
JSK/M2
JSG
JSC3/JSC4
USSD
UFCD
USC
UB
JSB3
LMB
LML
HCM
HCA
LBC
CAC4
UCAC2
CAC-N
UCAC-N
RCS2
RCC2
PCC
SHC
MCP
GLC
MFC
BBS
RRC
GRC
RV3*
NHS
HRL
LN
Hand
Chuk
MecHnd/Chuk
ShkAbs
FJ
FK
SpdContr
Ending

Dimensions

● Eye bracket (CA)

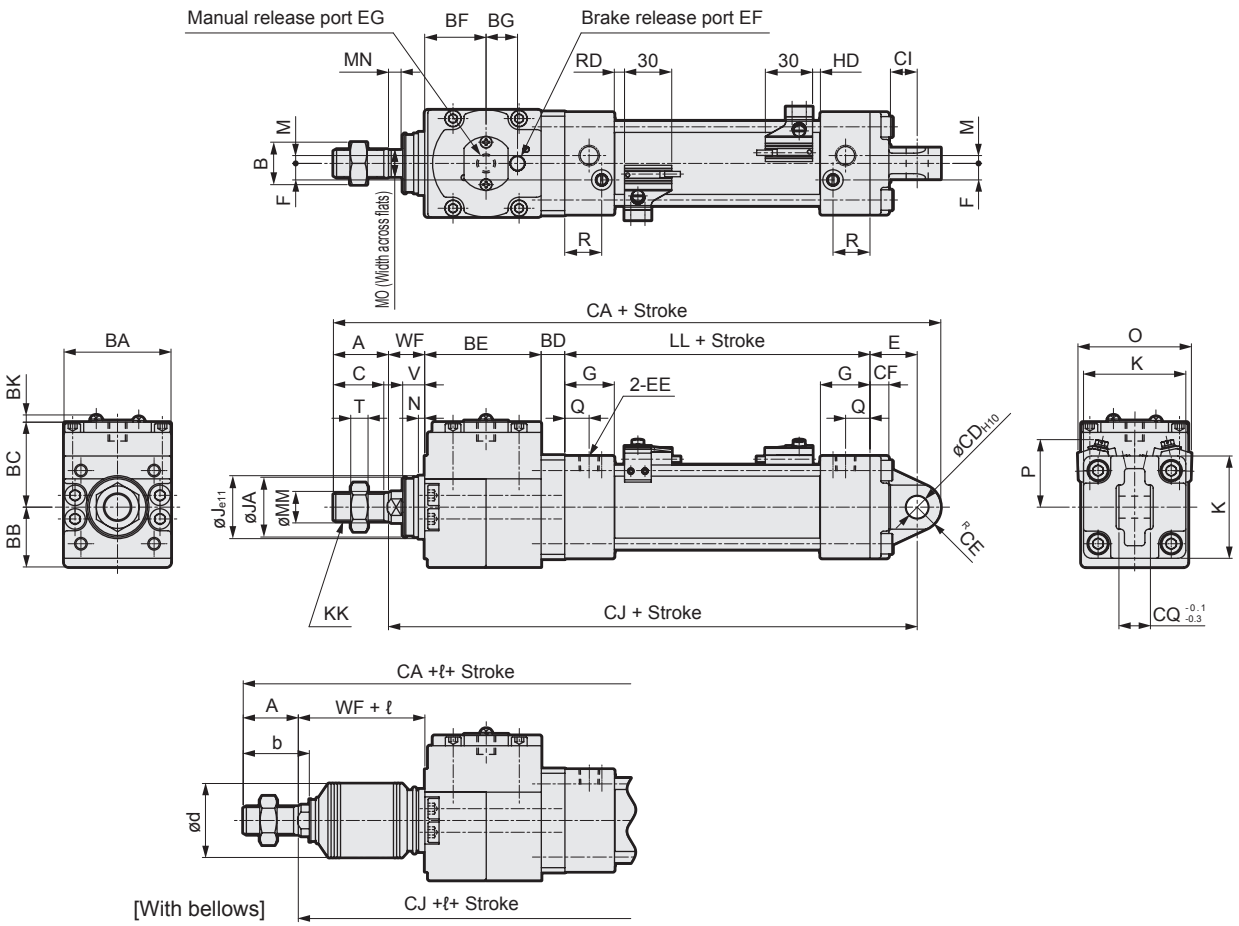

*1: Dimensions in ( ) are for the rubber cushion.
*2: Refer to page 758 for RD, HD and protruding dimensions of other switches.
*3: Refer to page 757 for dimensions of type with valves (JSG-V).

Code	Eye bracket (CA) basic dimensions																								
Bore size (mm)	A	B	BA	BB	BC	BD	BE	BF	BG	BK	C	EE	EF	EG	F	G	J	JA	K	KK	*1 LL	M	MM	MN	MO
ø40	30	22	57	31.5	46.5	14	63	32.5	20	4.6	27	Rc1/4	Rc1/8	M12	9	27	35	31	52	M14×1.5	84(90)	4	16	6	14
ø50	35	27	68	38	54	15	74	39	20	4.6	32	Rc1/4	Rc1/8	M12	10.5	31.5	40	38	65	M18×1.5	94(102)	5	20	8	17
ø63	35	27	78	43	59	15	88	44.5	27	4.6	32	Rc3/8	Rc1/4	M14	12	31.5	45	38	75	M18×1.5	94(102)	9	20	8	17
ø80	40	32	98	53	72.5	23	108	54.5	27	4.6	37	Rc3/8	Rc1/4	M16	14	38	45	43	95	M22×1.5	114(124)	11.5	25	11	22
ø100	40	41	118	63	80.5	22.5	128.5	65.5	35	4.6	37	Rc1/2	Rc3/8	M18	15	38	55	51	114	M26×1.5	114(124)	17	30	13	27

Code							Mounting dimensions								With switch					
Bore size (mm)	N	Q	R	T	V	WF	*1 FA	CD	CE	CF	CI	*1 CJ	CQ	E	O	P	T0, T5, T2, T3, T3P RD	T0, T5, T2, T3, T3P HD	T2W, T3W RD	T2W, T3W HD
ø40	4	14	19	8	13	21	246(252)	10	11	9	13	205(211)	14	23	66	41	5(8)	5(8)	7.5(10.5)	7.5(10.5)
ø50	4	15.5	23.5	11	14	23	286(294)	14	15	12	17	236(244)	20	30	72	43	6.5(10.5)	5(9)	9(13)	7(11)
ø63	4	16.5	21.5	11	14	23	300(308)	14	15	12	17	250(258)	20	30	83	48	6.5(10.5)	5(9)	9(13)	7(11)
ø80	4	19	28	13	20	32	382(392)	22	23	15	26	319(329)	30	42	104	57	12.5(17.5)	6(11)	15(20)	8(13)
ø100	4	19	28	16	20	32	402(412)	22	23	15	26	339(349)	30	42	121	63	12(17)	6.5(11.5)	14.5(19.5)	8.5(13.5)

Code	With bellows															
Bore size (mm)	A	b	d	WF	ℓ 50 or less	Over 50 to 100	Over 100 to 150	Over 150 to 200	Over 200 to 300	Over 300 to 400	Over 400 to 500	Over 500 to 600	Over 600 to 700	Over 700 to 750	Over 750 to 800	Over 800
ø40	30	35	40	21	30	43	55	68	93	118	143	0.35 x stroke-32				
ø50	35	42	47	23	31	44	56	69	94	119	144	169	0.35 x stroke-41			
ø63	35	42	47	23	31	44	56	69	94	119	144	169	0.35 x stroke-41			
ø80	40	50	53	32	29	42	54	67	92	117	142	167	192	204	217	0.35 x stroke-63
ø100	40	52.5	61	32	29	42	54	67	92	117	142	167	192	204	217	0.35 x stroke-63

Dimensions

● Clevis bracket (CB)

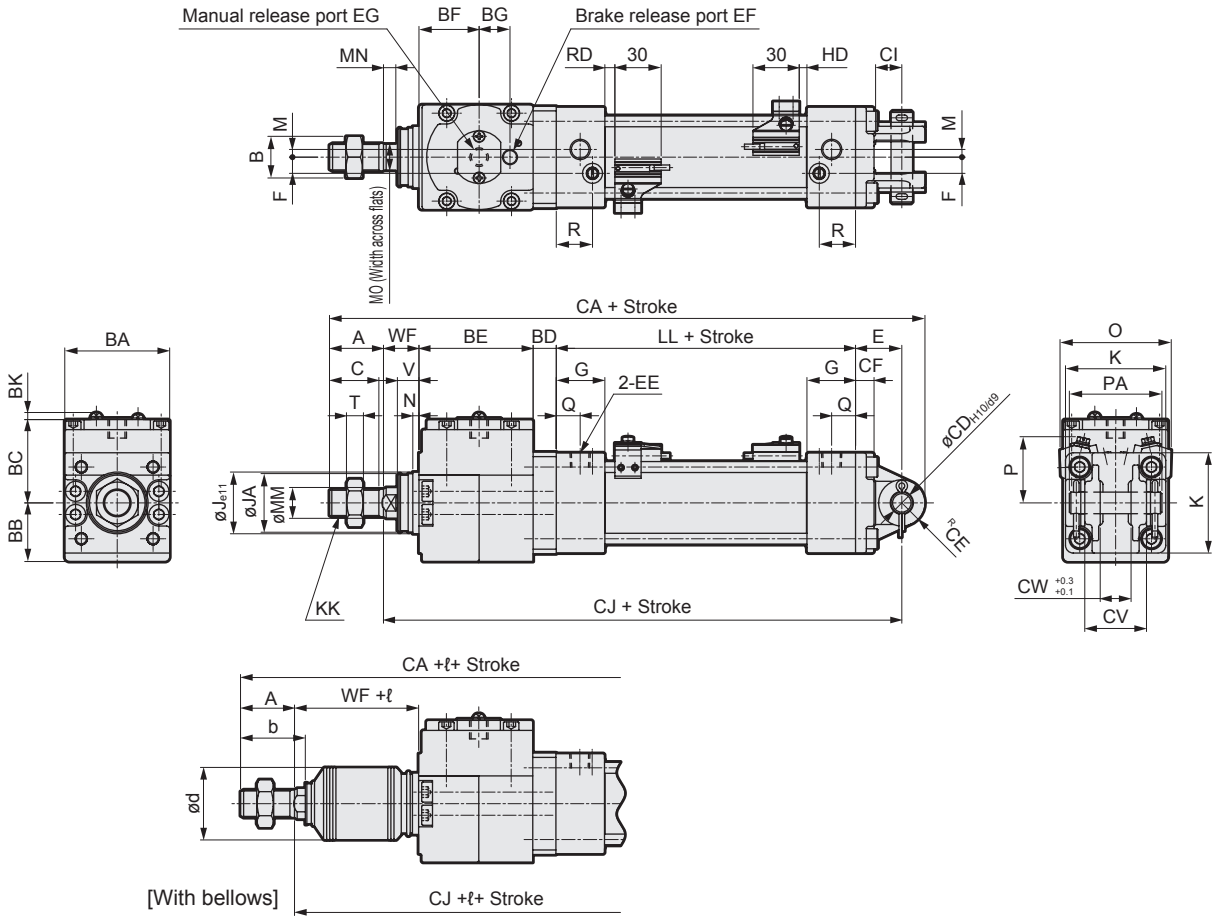

*1: Dimensions in ( ) are for the rubber cushion.
*2: Refer to page 758 for RD, HD and protruding dimensions of other switches.
*3: Refer to page 757 for dimensions of type with valves (JSG-V).

Code / Bore size (mm)	Clevis bracket (CB) basic dimensions																								
	A	B	BA	BB	BC	BD	BE	BF	BG	BK	C	EE	EF	EG	F	G	J	JA	K	KK	*1 LL	M	MM	MN	MO
ø40	30	22	57	31.5	46.5	14	63	32.5	20	4.6	27	Rc1/4	Rc1/8	M12	9	27	35	31	52	M14×1.5	84(90)	4	16	6	14
ø50	35	27	68	38	54	15	74	39	20	4.6	32	Rc1/4	Rc1/8	M12	10.5	31.5	40	38	65	M18×1.5	94(102)	5	20	8	17
ø63	35	27	78	43	59	15	88	44.5	27	4.6	32	Rc3/8	Rc1/4	M14	12	31.5	45	38	75	M18×1.5	94(102)	9	20	8	17
ø80	40	32	98	53	72.5	23	108	54.5	27	4.6	37	Rc3/8	Rc1/4	M16	14	38	45	43	95	M22×1.5	114(124)	11.5	25	11	22
ø100	40	41	118	63	80.5	22.5	128.5	65.5	35	4.6	37	Rc1/2	Rc3/8	M18	15	38	55	51	114	M26×1.5	114(124)	17	30	13	27

Code / Bore size (mm)							Mounting dimensions										With switch					
	N	Q	R	T	V	WF	*1 CA	CD	CE	CF	CI	*1 CJ	CV	CW	E	PA	O	P	T0, T5, T2, T3, T3P		T2W, T3W	
																			RD	HD	RD	HD
ø40	4	14	19	8	13	21	246(252)	10	11	9	13	205(211)	28	14	23	44	66	41	5(8)	5(8)	7.5(10.5)	7.5(10.5)
ø50	4	15.5	23.5	11	14	23	286(294)	14	15	12	17	236(244)	40	20	30	60	72	43	6.5(10.5)	5(9)	9(13)	7(11)
ø63	4	16.5	21.5	11	14	23	300(308)	14	15	12	17	250(258)	40	20	30	60	83	48	6.5(10.5)	5(9)	9(13)	7(11)
ø80	4	19	28	13	20	32	382(392)	22	23	15	26	319(329)	60	30	42	82	104	57	12.5(17.5)	6(11)	15(20)	8(13)
ø100	4	19	28	16	20	32	402(412)	22	23	15	26	339(349)	60	30	42	82	121	63	12(17)	6.5(11.5)	14.5(19.5)	8.5(13.5)

Code / Bore size (mm)	With bellows															
	A	b	d	WF	ℓ											
					50 or less	Over 50 to 100	Over 100 to 150	Over 150 to 200	Over 200 to 300	Over 300 to 400	Over 400 to 500	Over 500 to 600	Over 600 to 700	Over 700 to 750	Over 750 to 800	Over 800
ø40	30	35	40	21	30	43	55	68	93	118	143	0.35 x stroke-32				
ø50	35	42	47	23	31	44	56	69	94	119	144	169	0.35 x stroke-41			
ø63	35	42	47	23	31	44	56	69	94	119	144	169	0.35 x stroke-41			
ø80	40	50	53	32	29	42	54	67	92	117	142	167	192	204	217	0.35 x stroke-63
ø100	40	52.5	61	32	29	42	54	67	92	117	142	167	192	204	217	0.35 x stroke-63

LCM
LCR
LCG
LCW
LCX
STM
STG
STS/STL
STR2
UCA2
ULK*
JSK/M2
JSG
JSC3/JSC4
USSD
UFCD
USC
UB
JSB3
LMB
LML
HCM
HCA
LBC
CAC4
UCAC2
CAC-N
UCAC-N
RCS2
RCC2
PCC
SHC
MCP
GLC
MFC
BBS
RRC
GRC
RV3*
NHS
HRL
LN
Hand
Chuk
MecHnd/Chuk
ShkAbs
FJ
FK
SpdContr
Ending

Dimensions

● Rod side trunnion (TA)

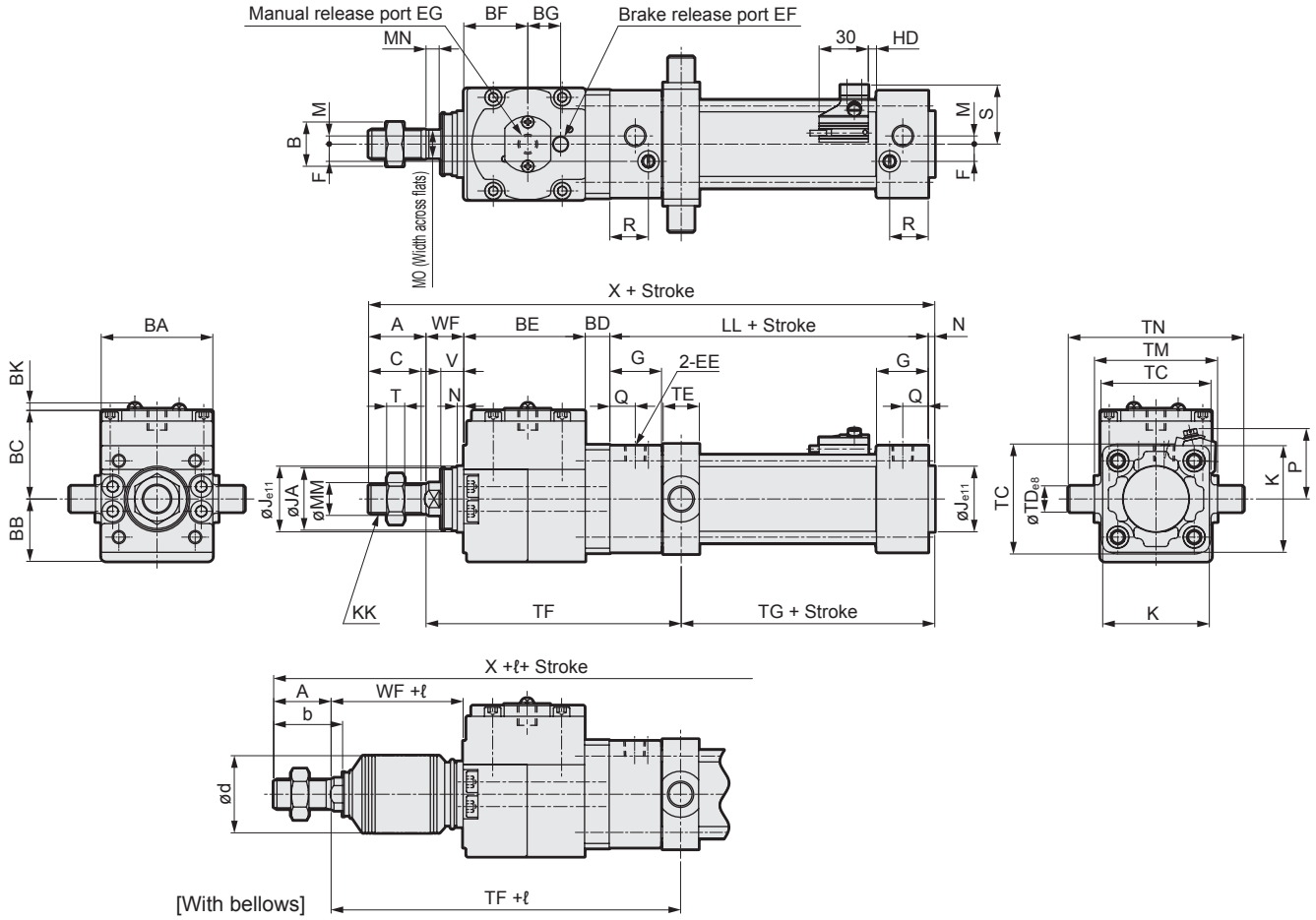

*1: Dimensions in ( ) are for the rubber cushion.
*2: Refer to page 758 for RD, HD and protruding dimensions of other switches.
*3: Refer to page 757 for dimensions of type with valves (JSG-V).

Code / Bore size (mm)	Rod side trunnion (TA) basic dimensions																							
	A	B	BA	BB	BC	BD	BE	BF	BG	BK	C	EE	EF	EG	F	G	J	JA	K	KK	*1 LL	M	MM	MN	MO
ø40	30	22	57	31.5	46.5	14	63	32.5	20	4.6	27	Rc1/4	Rc1/8	M12	9	27	35	31	52	M14×1.5	84(90)	4	16	6	14
ø50	35	27	68	38	54	15	74	39	20	4.6	32	Rc1/4	Rc1/8	M12	10.5	31.5	40	38	65	M18×1.5	94(102)	5	20	8	17
ø63	35	27	78	43	59	15	88	44.5	27	4.6	32	Rc3/8	Rc1/4	M14	12	31.5	45	38	75	M18×1.5	94(102)	9	20	8	17
ø80	40	32	98	53	72.5	23	108	54.5	27	4.6	37	Rc3/8	Rc1/4	M16	14	38	45	43	95	M22×1.5	114(124)	11.5	25	11	22
ø100	40	41	118	63	80.5	22.5	128.5	65.5	35	4.6	37	Rc1/2	Rc3/8	M18	15	38	55	51	114	M26×1.5	114(124)	17	30	13	27

Code / Bore size (mm)								Mounting dimensions							With switch			
	N	Q	R	T	V	WF	*1 X	TC	TD	TE	TF	*1 TG	TM	TN	S	P	T0, T5, T2, T3, T3P HD	T2W, T3W HD
ø40	4	14	19	8	13	21	216(222)	57	16	22	137	49(55)	63	95	33	41	5(8)	7.5(10.5)
ø50	4	15.5	23.5	11	14	23	245(253)	67	16	22	155.5	54.5(62.5)	75	107	36	43	5(9)	7(11)
ø63	4	16.5	21.5	11	14	23	259(267)	82	20	28	172.5	51.5(59.5)	90	130	41.5	48	5(9)	7(11)
ø80	4	19	28	13	20	32	321(331)	100	20	34	219	62(72)	110	150	52	57	6(11)	8(13)
ø100	4	19	28	16	20	32	341(351)	121	25	40	242	59(69)	132	182	60.5	63	6.5(11.5)	8.5(13.5)

Code / Bore size (mm)	With bellows															
	A	b	d	WF	ℓ											
					50 or less	Over 50 to 100	Over 100 to 150	Over 150 to 200	Over 200 to 300	Over 300 to 400	Over 400 to 500	Over 500 to 600	Over 600 to 700	Over 700 to 750	Over 750 to 800	Over 800
ø40	30	35	40	21	30	43	55	68	93	118	143	0.35 x stroke-32				
ø50	35	42	47	23	31	44	56	69	94	119	144	169	0.35 x stroke-41			
ø63	35	42	47	23	31	44	56	69	94	119	144	169	0.35 x stroke-41			
ø80	40	50	53	32	29	42	54	67	92	117	142	167	192	204	217	0.35 x stroke-63
ø100	40	52.5	61	32	29	42	54	67	92	117	142	167	192	204	217	0.35 x stroke-63

Dimensions

● Head side trunnion (TB)

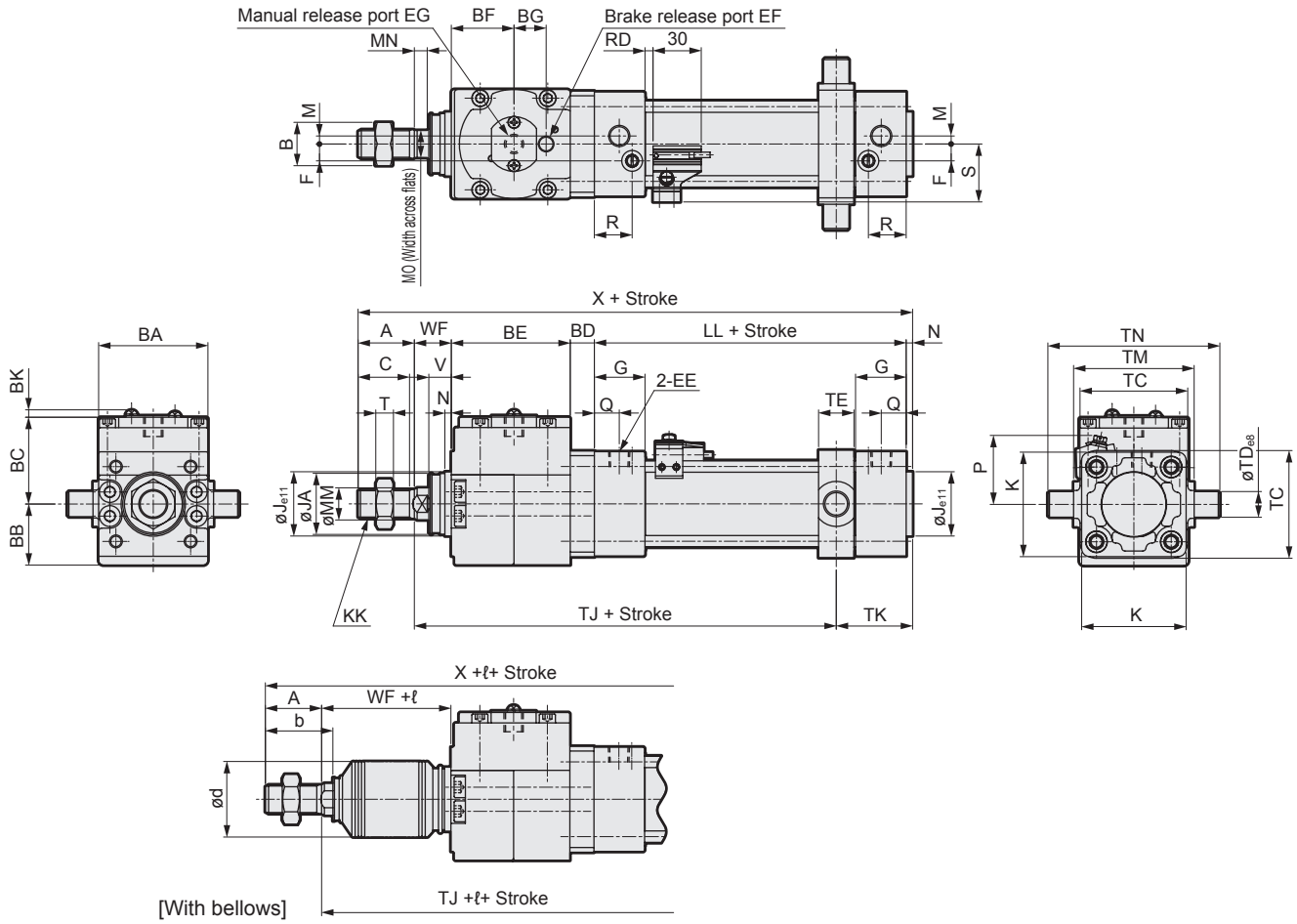

*1: Dimensions in ( ) are for the rubber cushion.
*2: Refer to page 758 for RD, HD and protruding dimensions of other switches.
*3: Refer to page 757 for dimensions of type with valves (JSG-V).

Code / Bore size (mm)	Head side trunnion (TB) basic dimensions																								
	A	B	BA	BB	BC	BD	BE	BF	BG	BK	C	EE	EF	EG	F	G	J	JA	K	KK	*1 LL	M	MM	MN	MO
ø40	30	22	57	31.5	46.5	14	63	32.5	20	4.6	27	Rc1/4	Rc1/8	M12	9	27	35	31	52	M14×1.5	84(90)	4	16	6	14
ø50	35	27	68	38	54	15	74	39	20	4.6	32	Rc1/4	Rc1/8	M12	10.5	31.5	40	38	65	M18×1.5	94(102)	5	20	8	17
ø63	35	27	78	43	59	15	88	44.5	27	4.6	32	Rc3/8	Rc1/4	M14	12	31.5	45	38	75	M18×1.5	94(102)	9	20	8	17
ø80	40	32	98	53	72.5	23	108	54.5	27	4.6	37	Rc3/8	Rc1/4	M16	14	38	45	43	95	M22×1.5	114(124)	11.5	25	11	22
ø100	40	41	118	63	80.5	22.5	128.5	65.5	35	4.6	37	Rc1/2	Rc3/8	M18	15	38	55	51	114	M26×1.5	114(124)	17	30	13	27

Code / Bore size (mm)								Mounting dimensions							With switch			
	N	Q	R	T	V	WF	*1 X	TC	TD	TE	*1 TJ	TK	TM	TN	S	P	T0, T5, T2, T3, T3P RD	T2W, T3W RD
ø40	4	14	19	8	13	21	216(222)	57	16	22	143(149)	43	63	95	33	41	5(8)	7.5(10.5)
ø50	4	15.5	23.5	11	14	23	245(253)	67	16	22	162.5(170.5)	47.5	75	107	36	43	6.5(10.5)	9(13)
ø63	4	16.5	21.5	11	14	23	259(267)	82	20	28	173.5(181.5)	50.5	90	130	41.5	48	6.5(10.5)	9(13)
ø80	4	19	28	13	20	32	321(331)	100	20	34	221(231)	60	110	150	52	57	12.5(17.5)	15(20)
ø100	4	19	28	16	20	32	341(351)	121	25	40	238(248)	63	132	182	60.5	63	12(17)	14.5(19.5)

Code / Bore size (mm)	With bellows															
	A	b	d	WF	ℓ											
					50 or less	Over 50 to 100	Over 100 to 150	Over 150 to 200	Over 200 to 300	Over 300 to 400	Over 400 to 500	Over 500 to 600	Over 600 to 700	Over 700 to 750	Over 750 to 800	Over 800
ø40	30	35	40	21	30	43	55	68	93	118	143	0.35 x stroke-32				
ø50	35	42	47	23	31	44	56	69	94	119	144	169	0.35 x stroke-41			
ø63	35	42	47	23	31	44	56	69	94	119	144	169	0.35 x stroke-41			
ø80	40	50	53	32	29	42	54	67	92	117	142	167	192	204	217	0.35 x stroke-63
ø100	40	52.5	61	32	29	42	54	67	92	117	142	167	192	204	217	0.35 x stroke-63

LCM
LCR
LCG
LCW
LCX
STM
STG
STS/STL
STR2
UCA2
ULK*
JSK/M2
JSG
JSC3/JSC4
USSD
UFCD
USC
UB
JSB3
LMB
LML
HCM
HCA
LBC
CAC4
UCAC2
CAC-N
UCAC-N
RCS2
RCC2
PCC
SHC
MCP
GLC
MFC
BBS
RRC
GRC
RV3*
NHS
HRL
LN
Hand
Chuk
MecHnd/Chuk
ShkAbs
FJ
FK
SpdContr
Ending

Dimensions CAD

● Intermediate trunnion (TC)

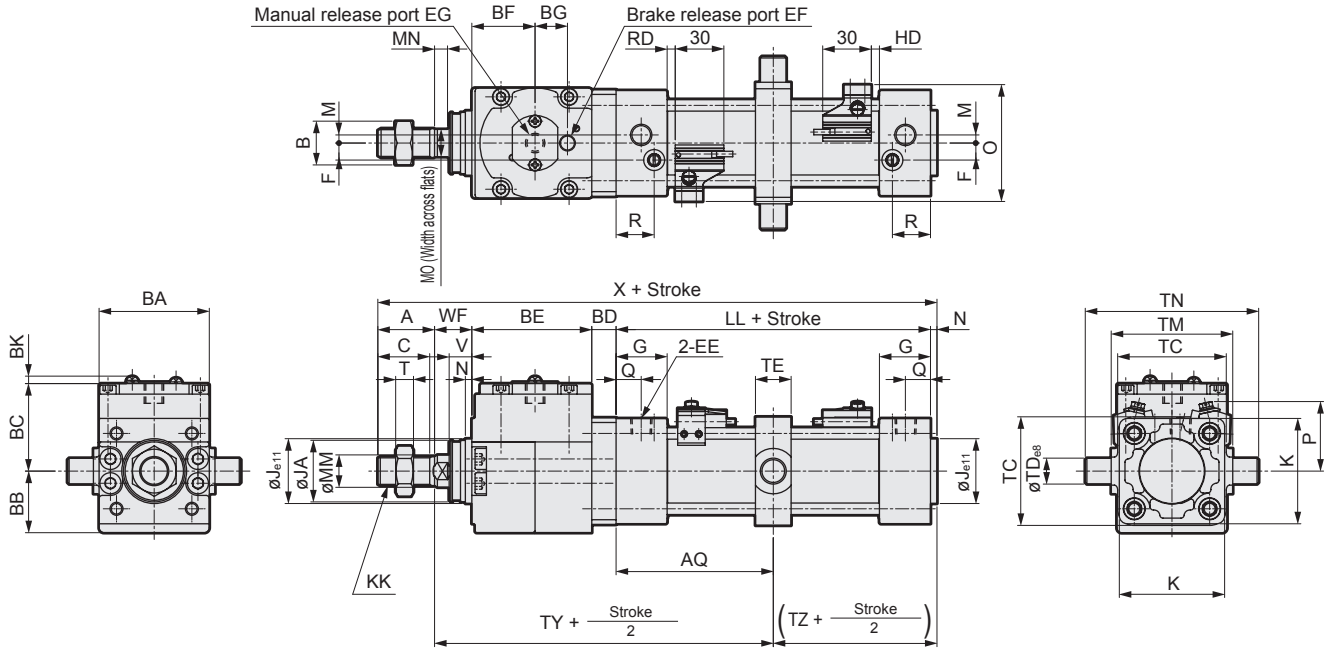

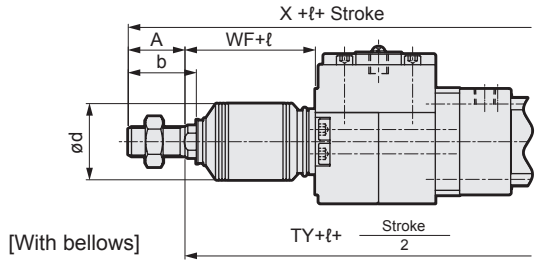

[With bellows]

*1: Dimensions in ( ) are for the rubber cushion.
*2: Refer to page 758 for RD, HD and protruding dimensions of other switches.
*3: Refer to page 757 for dimensions of type with valves (JSG-V).

Code / Bore size (mm)	Intermediate trunnion (TC) basic dimensions																							
	A	B	BA	BB	BC	BD	BE	BF	BG	BK	C	EE	EF	EG	F	G	J	JA	K	KK	*1 LL	M	MM	MN	MO
ø40	30	22	57	31.5	46.5	14	63	32.5	20	4.6	27	Rc1/4	Rc1/8	M12	9	27	35	31	52	M14×1.5	84(90)	4	16	6	14
ø50	35	27	68	38	54	15	74	39	20	4.6	32	Rc1/4	Rc1/8	M12	10.5	31.5	40	38	65	M18×1.5	94(102)	5	20	8	17
ø63	35	27	78	43	59	15	88	44.5	27	4.6	32	Rc3/8	Rc1/4	M14	12	31.5	45	38	75	M18×1.5	94(102)	9	20	8	17
ø80	40	32	98	53	72.5	23	108	54.5	27	4.6	37	Rc3/8	Rc1/4	M16	14	38	45	43	95	M22×1.5	114(124)	11.5	25	11	22
ø100	40	41	118	63	80.5	22.5	128.5	65.5	35	4.6	37	Rc1/2	Rc3/8	M18	15	38	55	51	114	M26×1.5	114(124)	17	30	13	27

Code / Bore size (mm)								Mounting dimensions									With switch					
	N	Q	R	T	V	WF	*1 X	TC	TD	TE	TM	TN	*1 TY	*1 TZ	*1 AQ		O	P	T0,T5,T2,T3,T3P RD	T0,T5,T2,T3,T3P HD	T2W,T3W RD	T2W,T3W HD
ø40	4	14	19	8	13	21	216(222)	57	16	22	63	95	140(143)	46(49)	42(45)+ Stroke/2		66	41	5(8)	5(8)	7.5(10.5)	7.5(10.5)
ø50	4	15.5	23.5	11	14	23	245(253)	67	16	22	75	107	159(163)	51(55)	47(51)+ Stroke/2		72	43	6.5(10.5)	5(9)	9(13)	7(11)
ø63	4	16.5	21.5	11	14	23	259(267)	82	20	28	90	130	173(177)	51(55)	47(51)+ Stroke/2		83	48	6.5(10.5)	5(9)	9(13)	7(11)
ø80	4	19	28	13	20	32	321(331)	100	20	34	110	150	220(225)	61(66)	51(62)+ Stroke/2		104	57	12.5(17.5)	6(11)	15(20)	8(13)
ø100	4	19	28	16	20	32	341(351)	121	25	40	132	182	240(245)	61(66)	51(62)+ Stroke/2		121	63	12(17)	6.5(11.5)	14.5(19.5)	8.5(13.5)

Code / Bore size (mm)	With bellows															
	A	b	d	WF	ℓ											
					50 or less	Over 50 to 100	Over 100 to 150	Over 150 to 200	Over 200 to 300	Over 300 to 400	Over 400 to 500	Over 500 to 600	Over 600 to 700	Over 700 to 750	Over 750 to 800	Over 800
ø40	30	35	40	21	30	43	55	68	93	118	143	0.35 x stroke-32				
ø50	35	42	47	23	31	44	56	69	94	119	144	169	0.35 x stroke-41			
ø63	35	42	47	23	31	44	56	69	94	119	144	169	0.35 x stroke-41			
ø80	40	50	53	32	29	42	54	67	92	117	142	167	192	204	217	0.35 x stroke-63
ø100	40	52.5	61	32	29	42	54	67	92	117	142	167	192	204	217	0.35 x stroke-63

Dimensions

● JSG-V (with valve for brake release)

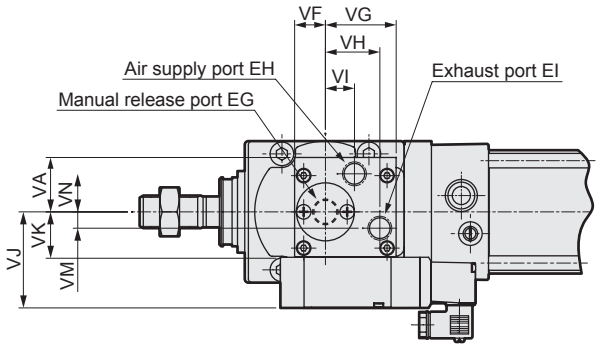

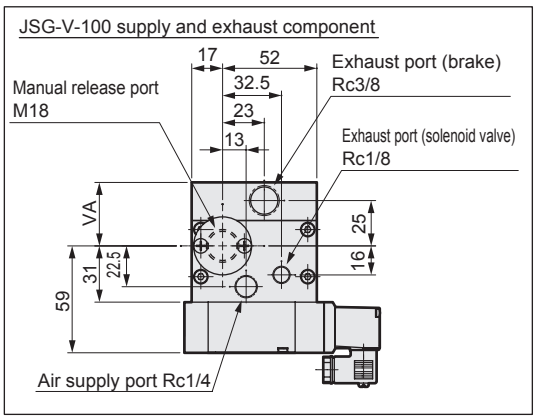

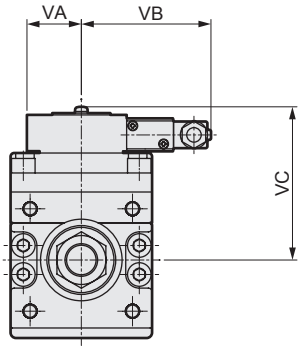

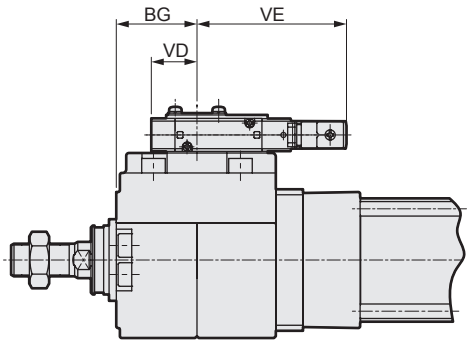

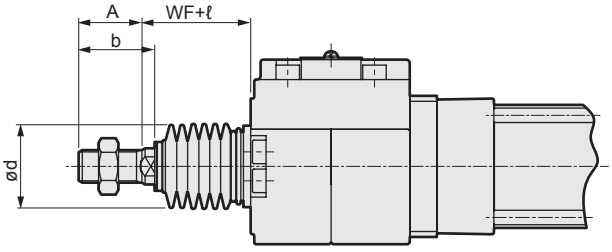

*1: The shape of the JSG-V-100 supply and exhaust port differs from that of other sizes. Refer to the dimensions of JSG-V-100 supply and exhaust components in the upper right figure.

Code / Bore size (mm)	With valve for brake release (JSG-V) basic dimensions																
	BG	EG	EH	EI	VA	VB	VC	VD	VE	VF	VG	VH	VI	VJ	VK	VM	VN
ø40	32.5	M12	Rc1/8	Rc1/8	26	62.5	72	24	83.5	19	38	30	12.5	44	16	4	16
ø50	39	M12	Rc1/8	Rc1/8	26	62.5	79.5	24	83.5	19	38	30	12.5	44	16	4	16
ø63	44.5	M14	Rc1/4	Rc1/4	30	71.5	84.5	25	82.5	17	39	30	16	53	25	9	21
ø80	54.5	M16	Rc1/4	Rc1/4	30	71.5	98	25	82.5	17	39	30	16	53	25	9	21
ø100	65.5	M18	*1		35	77.5	113	21	86.5	*1							

Code / Bore size (mm)	With bellows													
	A	b	d	WF	ℓ									
					50 or less	Over 50 to 100	Over 100 to 150	Over 150 to 200	Over 200 to 300	Over 300 to 400	Over 400 to 500	Over 500 to 600	Over 600 to 700	Over 700 to 750
ø40	30	35	40	21	30	43	55	68	93	118	143	-	-	-
ø50	35	42	47	23	31	44	56	69	94	119	144	169	-	-
ø63	35	42	47	23	31	44	56	69	94	119	144	169	-	-
ø80	40	50	53	32	29	42	54	67	92	117	142	167	192	204
ø100	40	52.5	61	32	29	42	54	67	92	117	142	167	192	204

* Dimensions other than those listed above are the same as those of double acting/single rod. Refer to pages 748 to 756.

LCM
LCR
LCG
LCW
LCX
STM
STG
STS/STL
STR2
UCA2
ULK*
JSK/M2
JSG
JSC3/JSC4
USSD
UFCD
USC
UB
JSB3
LMB
LML
HCM
HCA
LBC
CAC4
UCAC2
CAC-N
UCAC-N
RCS2
RCC2
PCC
SHC
MCP
GLC
MFC
BBS
RRC
GRC
RV3*
NHS
HRL
LN
Hand
Chuk
MecHnd/Chuk
ShkAbs
FJ
FK
SpdContr
Ending

JSG Series common Dimensions with switch

● With T2Y, T3Y, T2J, T8 switches

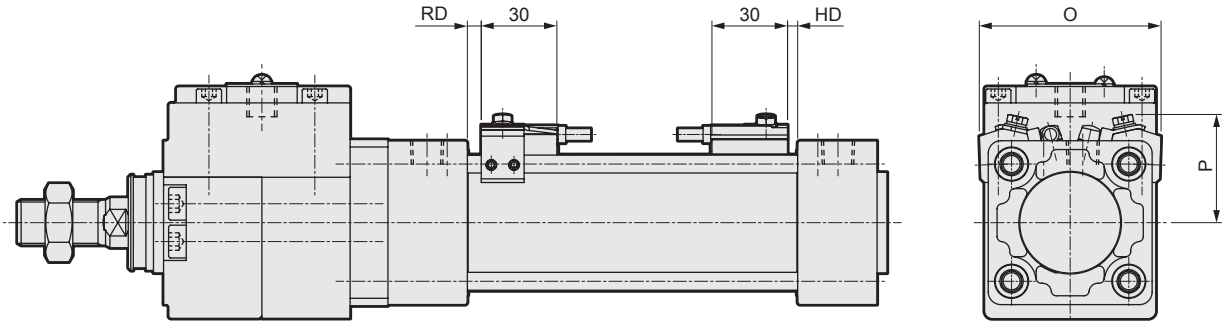

Code	With T2Y, T3Y, T2J, T8 switches					
Bore size (mm)	O	P	T2Y, T3Y, T2J		T8	
			RD	HD	RD	HD
ø40	66	41	4(7)	4(7)	0(2)	0(2)
ø50	72	43	5.5(9.5)	4(8)	0.5(4.5)	0(3)
ø63	83	48	5.5(9.5)	4(8)	0.5(4.5)	0(3)
ø80	104	57	11.5(16.5)	5(10)	6.5(11.5)	0(5)
ø100	121	63	11(16)	5.5(10.5)	6(11)	0.5(5.5)

*1: Dimensions in ( ) are for the rubber cushion.

● With T1, T2YD, T2YDT-switches

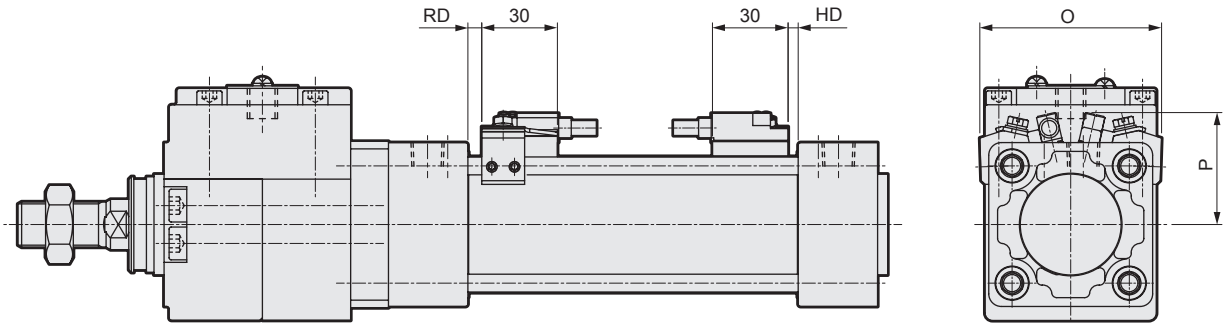

Code	With T1, T2YD, T2YDT-switches			
Bore size (mm)	O	P	RD	HD
ø40	66	41	4(7)	4(7)
ø50	72	44	5.5(9.5)	4(8)
ø63	83	50	5.5(9.5)	4(8)
ø80	104	57	11.5(16.5)	5(10)
ø100	121	64	11(16)	5.5(10.5)

*1: Dimensions in ( ) are for the rubber cushion.

JSG Series common accessory dimensions (rod eye, clevis, bracket)

CAD

● Rod eye (I)

Material: Steel
Painting

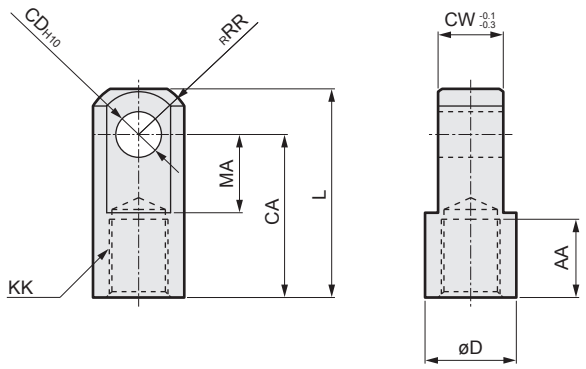

Model No.	Bore size (mm)	AA	CA	CD	CW	D	KK	L	MA	RR	Wt (kg)
SCG-I-40	40	19	40	10	14	22	M14×1.5	50	19	12.5	0.07
SCG-I-50	50,63	24	50	14	20	28	M18×1.5	64	24	16.5	0.20
SCG-I-80	80	26	60	22	30	40	M22×1.5	80	34	23.5	0.52
SCG-I-100	100	26	60	22	30	40	M26×1.5	80	34	23.5	0.48

● Rod clevis (Y)

Material: Cast iron
Painting

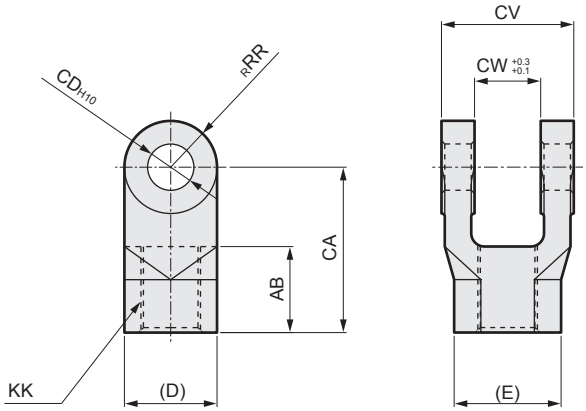

Model No.	Bore size (mm)	AB	CA	CD	CV	CW	D	E	KK	RR	Wt (kg)
SCG-Y-40	40	21	40	10	28	14	22	22.4	M14×1.5	11	0.13
SCG-Y-50	50,63	26	50	14	40	20	28	29.3	M18×1.5	14	0.30
SCG-Y-80	80	31	65	22	60	30	40	43.2	M22×1.5	20	0.94
SCG-Y-100	100	31	65	22	60	30	40	43.2	M26×1.5	20	0.92

Note: A pin, a split pin and a plain washer are attached.

● Eye bracket (B1)

Material: Cast iron
Painting

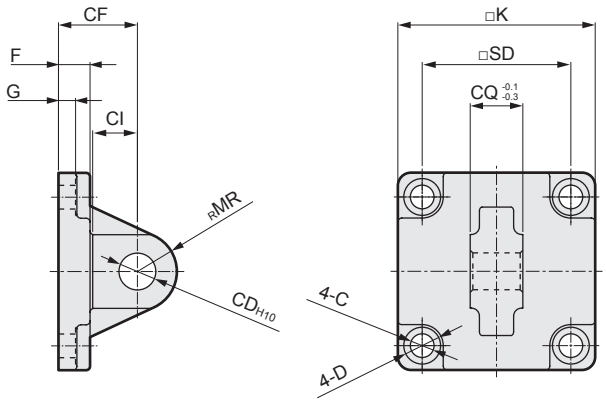

Model No.	Bore size (mm)	C	CD	CF	CI	CQ	D	F	G	K	MR	SD	Wt (kg)
SCG-B1-40	40	6.6	10	23	13	14	11	9	4.5	52	11	38	0.16
SCG-B1-50	50	9	14	30	17	20	14	12	6.5	65	15	46.5	0.38
SCG-B1-63	63	9	14	30	17	20	14	12	6.5	75	15	56.5	0.48
SCG-B1-80	80	11	22	42	26	30	17	15	8.5	95	23	72	1.19
SCG-B1-100	100	11	22	42	26	30	17	15	8.5	114	23	89	1.56

● Clevis bracket (B2)

Material: Cast iron
Painting

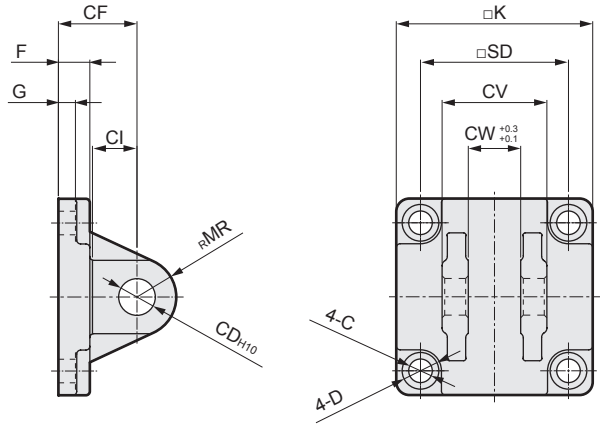

Model No.	Bore size (mm)	C	CD	CF	CI	CV	CW	D	F	G	K	MR	SD	Wt (kg)
SCG-B2-40	40	6.6	10	23	13	28	14	11	9	4.5	52	11	38	0.20
SCG-B2-50	50	9	14	30	17	40	20	14	12	6.5	65	15	46.5	0.46
SCG-B2-63	63	9	14	30	17	40	20	14	12	6.5	75	15	56.5	0.58
SCG-B2-80	80	11	22	42	26	60	30	17	15	8.5	95	23	72	1.52
SCG-B2-100	100	11	22	42	26	60	30	17	15	8.5	114	23	89	1.91

Note: A pin, a split pin and a plain washer are attached.

Accessory dimensions

● Eye bracket (B3)

Material: Cast iron
Painting

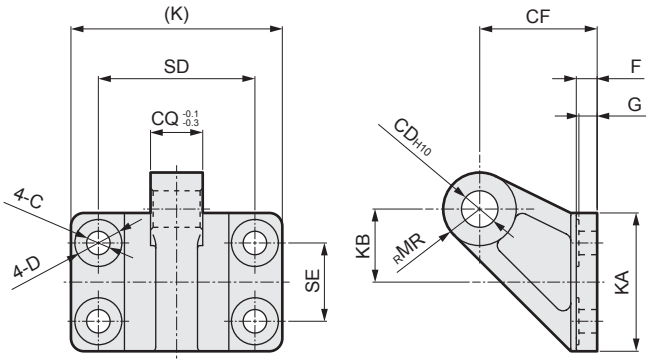

Model No.	Bore size (mm)	C	CD	CF	CQ	D	F	G	K	KA	KB	MR	SD	SE	Wt (kg)
SCG-B3-32	40	6.6	10	33	14	15	7	6	62	42	21	10	44	22	0.21
SCG-B3-50	50,63	9	14	45	20	18	8	7	81	53	28	14	60	30	0.45
SCG-B3-80	80,100	11	22	65	30	22	10	9	111	73	41.5	22	86	45	1.23

● Trunnion No. 2 bracket (B4)

Material: Cast iron
Painting

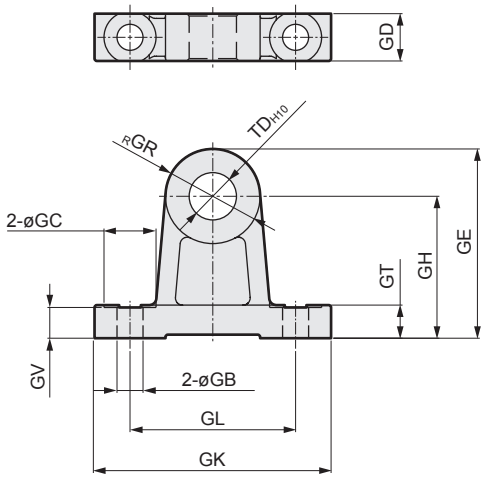

Model No.	Bore size (mm)	GB	GC	GD	GE	GR	GH	GK	GL	GT	GV	TD	Wt (kg)
SCG-B4-40	40,50	9	18	17	60	30	45	80	60	12	11	16	0.43
SCG-B4-63	63,80	11	22	20	80	40	60	100	70	14	13	20	0.87
SCG-B4-100	100	13.5	24	26	100	50	75	120	90	17	16	25	1.75

Note: The bracket is provided as 2 pcs./set.

● Pin (P)

Material: Steel
Zinc chromate treatment

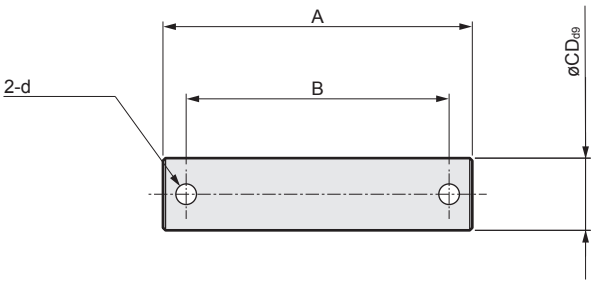

Model No.	Applicable bore size (mm)	A	B	CD	d	Weight (kg)
SCG-P-32	40	44	36	10	3	0.04
SCG-P-50	50,63	60	51	14	4	0.10
SCG-P-80	80,100	82	72	22	4	0.34

Note: Split pin and plain washer are attached.

LCM
LCR
LCG
LCW
LCX
STM
STG
STS/STL
STR2
UCA2
ULK*
JSK/M2
JSG
JSC3/JSC4
USSD
UFCD
USC
UB
JSB3
LMB
LML
HCM
HCA
LBC
CAC4
UCAC2
CAC-N
UCAC-N
RCS2
RCC2
PCC
SHC
MCP
GLC
MFC
BBS
RRC
GRC
RV3*
NHS
HRL
LN
Hand
Chuk
MecHnd/Chuk
ShkAbs
FJ
FK
SpdContr
Ending

Applications

This product can be used with devices and equipment requiring the following functions.

1 When multipoint positioning is required (transfer/positioning)

The equipment can be accurately stopped at several required positions.

2 When position locking is required

The brakes can be applied and held instantly when the air source or power is turned OFF (during power failure or accident), preventing equipment damage and securing safety.

3 When emergency stop is required

The cylinder can be immediately stopped with electric signals, etc., when a worker enters a hazardous area.

4 Workpiece lock

When locking the workpiece to the jig or mounting base, etc., it can be locked even if there is no pneumatic source or power. The workpiece can be transferred while locked to the jig.

Applications

1 Linear multipoint welding

When welding steel plates, etc., linearly at several points, this cylinder can be used to move and position the slide table or welding gun.

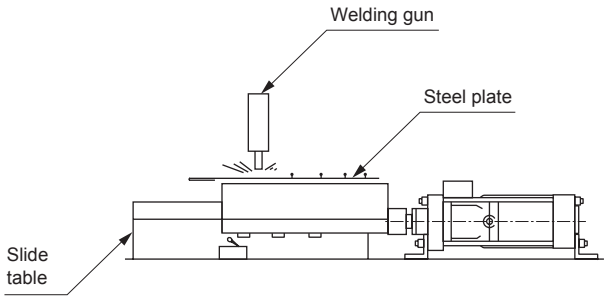

2 Position locking

If there is a load in the vertical direction and the load could fall under its own weight when the pressure source is cut off, the brakes will be applied to prevent falling.

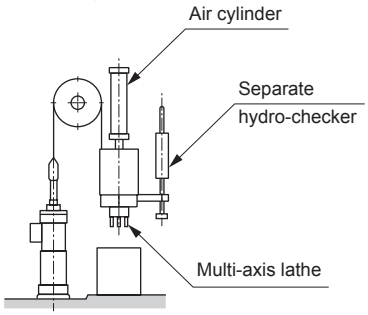

3 Workpiece lock

When locking the workpiece to the jig, etc., if the brake cylinder is used, it will be locked even when the pneumatic source or power is OFF.

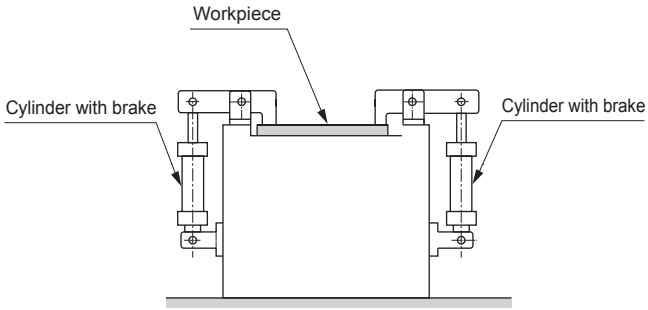

4 Movement to conveyor

Move products to the conveyor one at a time.

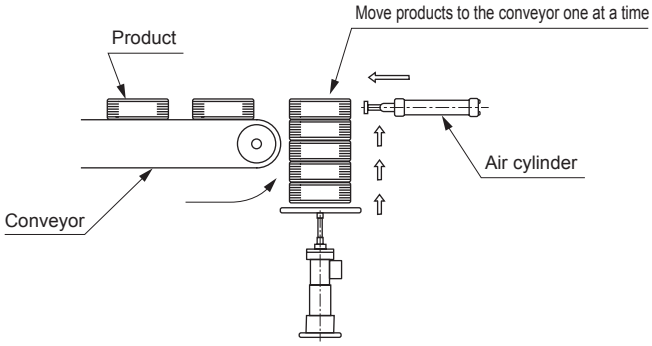

5 When several cylinders with different strokes are required

When different-sized products are in motion on a conveyor, etc., in many cases the stroke for the cylinders set there must also be changed. Using the brake cylinder, a cylinder compatible with different strokes is created electrically.

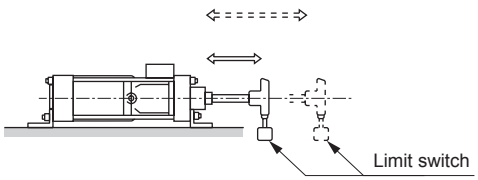

6 Hopper open/close

In the case where a hopper must be closed at a specific weight in powder manufacturing, accurate measurement is obtained by stopping the hopper, measuring it accurately and then completely closing it.

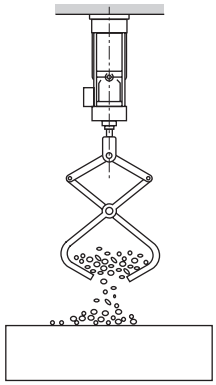

Pneumatic components

Safety Precautions

Be sure to read this section before use.

Refer to Intro Page 73 for general information of the cylinder, and to Intro Page 80 for general information of the cylinder switch.

Product-specific cautions: Tie rod with brake JSG Series

Design/selection

⚠ WARNING

■ Design a structure that prevents person(s) from coming into contact with the driven workpiece as well as the moving parts of the cylinder with brakes.

Provide a protective cover so that no one can directly touch the unit. In case of possible contact, provide safety measures such as a sensor for emergency stop before making contact and a buzzer to warn of danger.

■ Use a balanced circuit that accommodates the protrusion of the piston rod.

If the cylinder is stopped part-way in the stroke with the brake, etc., and air pressure is applied to one side of the cylinder, the piston rod will pop out at high speeds when the brake is released. This could cause physical harm, such as pinched hands or feet, or mechanical damage. Use a balance circuit, such as the basic circuit, to prevent popping out.

■ The holding force is the ability to hold static load that is not accompanied by vibration or shock, in a state where the brake is operating under no load.

Take care when constantly using near the upper limit of the holding force.

■ Do not apply loads with impact, strong vibration, or torque while brakes are activated.

If load is externally applied with impact, or if strong vibration or rotational force is externally applied, the holding force can be reduced, creating a dangerous situation.

■ Consider the stopping accuracy and overrun distance during braking.

Because a mechanical lock is applied, the cylinder does not stop instantly when the stop signal is issued, but stops with a time-wise delay. The stroke at which the cylinder slides due to this delay is the overrun distance. The max. and min. width of the overrun distance is the stopping accuracy.

- To achieve the required stop position, move the limit switch forward by the overrun distance.
- The limit switch must have a detection length (dog length) of the overrun distance + α.
- The operating range of CKD cylinder switches is 7 to 16mm (differs depending on the switch model). If overrun distance exceeds this, provide self-holding of the contact at the switch load.

■ Do not use multiple synchronized cylinders with brakes. If the synchronization deviates, load is concentrated on the cylinder where the brake was applied first, risking shortened service life or damage.

■ In order to improve stopping accuracy, ensure that the brake stops the cylinder as soon as possible after receiving the stop signal.

Use a high response DC control electricity circuit or valve, and set the valve as close to the cylinder as possible.

■ The stopping accuracy is susceptible to fluctuations in piston speed.

If the piston speed changes due to load fluctuations or by some disturbance while the cylinder is moving, the stopping position may vary sharply. Make sure that the piston speed stays the same up to just before the stop position. Since the speed changes significantly in the cushioned range and in the acceleration range after starting operation, the variability of the stopping position will increase. The stopping accuracy with a piston speed of 300mm/s with no load is ±1.0mm (reference value). This value differs based on the device used. For more information, refer to the page on stopping accuracy and overrun.

⚠ WARNING

■ Basic circuit

Always adopt the following circuit even for position locking and emergency stop applications. A 2-position valve cannot be used because it affects the brake section even when the cylinder thrust is stopped. Maintain thrust and load balance with the following circuit. Brakes may not be released when load is applied to brakes.

● Horizontal load

When piping is as shown in Fig. 1, equal pressure is applied to both ends of the piston when stopped to prevent the rod from popping out when the brakes are released. Install a regulator with check valve on the head side to maintain thrust balance.

Fig. 1

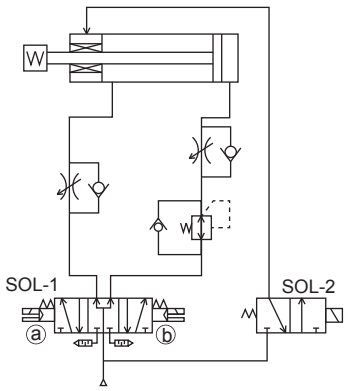

ⓐ SOL-1	ⓑ	SOL-2	Operational status
OFF	OFF	OFF	Stop
ON	OFF	ON	Reverse
OFF	ON	ON	Forward

Design/selection

● For downward vertical load
If load faces downward as shown in Fig. 2, the rod malfunctions in the load direction when brakes are released. Place a regulator with a check valve on the head side to reduce thrust in the load direction and balance the load.

Fig. 2

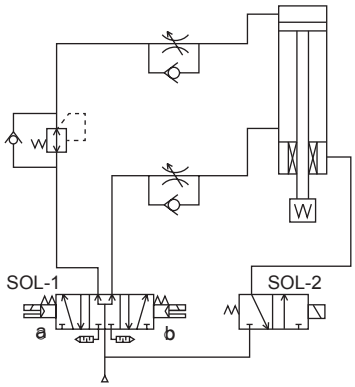

ⓐ SOL-1 ⓑ		SOL-2	Operational status
OFF	OFF	OFF	Stop
ON	OFF	ON	Drop
OFF	ON	ON	Rise

● For upward vertical load
If load faces upward as shown in Fig. 3, the rod malfunctions in the load direction when brakes are released. Place a regulator with a check valve on the rod side to reduce thrust in the load direction and balance the load.

Fig. 3

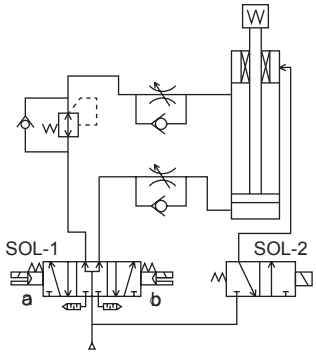

ⓐ SOL-1 ⓑ		SOL-2	Operational status
OFF	OFF	OFF	Stop
ON	OFF	ON	Drop
OFF	ON	ON	Rise

⚠ CAUTION

■ Mount a speed controller on the cylinder.
Mount the speed controller on the cylinder.
Use within the working piston speed range of each series.

■ Stopping accuracy
● Stopping pitch and load factor
Stopping accuracy differs with stopping pitch and load factor. The load factor below is recommended for achieving stopping accuracy.
*Stopping accuracy reference value: ±1.0 (300 mm/s, no load)

Stop pitch	Load factor
	JSG
50 mm or less	20% of thrust
50 mm to 100 mm	40% of thrust
100 mm or more	60% of thrust

● Selection of valve for brake
The stopping accuracy and overrun distance will change according to the responsiveness of the brake valve. Refer to the JSG-V electrical specification for brake valve and select from the CKD pneumatic valve 4KB2 Series. Connect the valve directly to the brake port to improve stopping accuracy.
● When using a PLC (programmable controller)
If a PLC (programmable controller) is used as the electrical control unit for the valve for brake, stopping accuracy drops due to scan time (computing time). When using a PLC, do not assemble the valve for brake into the PLC circuit.

■ Do not make major changes in applied load when stopped with brakes, or the stopping position may change.

⚠ CAUTION

■ As a cushion mechanism integrated in the cylinder, the rubber cushion and the air cushion are available. The purpose of the air cushion is to absorb the piston's kinetic energy by using air compressibility, avoiding collisions of piston and cover at the stroke end. Thus, the cushion is not used to decelerate the piston speed (deceleration action) near the stroke end. The following table shows the kinetic energy that can be absorbed by the cushion. If the kinetic energy exceeds these values, or if bouncing caused by the air compressibility is to be avoided, consider using another shock absorber.

Bore size (mm)	Rubber cushion	Air cushion	
	Allowable absorbed energy J	Effective air cushion length (mm)	Allowable absorbed energy J
ø40	0.9	8.6	3.7
ø50	1.6	13.4	8.0
ø63	1.6	13.4	14.4
ø80	3.3	15.4	25.4
ø100	5.8	15.4	45.6

Kinetic energy (J) =

$$\frac{1}{2} \times \text{Weight (kg)} \times \{\text{Speed (m/s)}\}^2$$

(Note) Calculating kinetic energy

Average cylinder speed is obtained with $Va = \frac{L}{T}$.

Va : Average speed (m/s)
L : Cylinder stroke (m)
T : Operating time (s)

With respect to this, the cylinder speed just before rushing into the cushion can be obtained with the following simple formula.

$$Vm = \frac{L}{T} \times (1 + 1.5 \times \frac{\omega}{100})$$

Vm : Speed just before rush-into the cushion (m/s)
ω : Cylinder load factor (%)

Use this Vm value as speed to calculate kinetic energy.

Mounting, installation and adjustment

⚠ WARNING

■ Release brakes before coupling the load to the end of the rod. If coupled while brakes are applied, torque or load exceeding holding force may be applied to the piston rod and damage the brake mechanism.

■ If the brake is released while air is applied to only one side of the cylinder, the piston rod can pop out at high speed, creating a dangerous situation. When releasing the brake during adjustment or other maintenance, always observe the following:

- Check that no one is in the movable range of the load and that no problems will arise if the load moves when brakes are released.
- When releasing the brake, perform position locking or take other measures:
  - · Place the load to the bottom end
  - · Pressurize both sides
  - · Place a strut

  to prevent the load from falling.
- Confirm that air is not pressured on only one side of the cylinder when releasing brakes.

■ How to manually release the brake

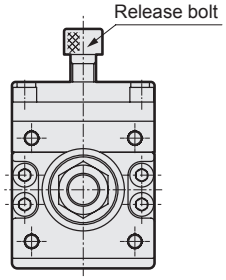

Note: How to release the brake

- The brakes are released by screwing the release bolt into the female threads (brake release port) on the top of the brakes. (Always remove the release bolt during normal use.)

Release bolt size

Bore size	Bolt screw diameter	Bolt length		Appropriate screw-in volume
		JSG	JSG-V	
ø40	M12×1.75	16 or more	40 or more	3 rotations or less
ø50	M12×1.75	16 or more	40 or more	4 rotations or less
ø63	M14×2	16 or more	40 or more	4 rotations or less
ø80	M16×2	20 or more	40 or more	4.5 rotations or less
ø100	M18×2.5	20 or more	50 or more	5 rotations or less

■ Brakes are released manually or by pressurizing the brake release port. When mounting the load, the brake release operation may cause the load to fall; make sure to check that the brake is operational when the manual release operation is set to default or when there is no air in the brake release port.

■ Do not apply torque to the rod when braking, as the holding force will decrease, creating hazardous conditions. Also, use this product in mechanisms in which the rod does not rotate.

■ Do not apply to the cylinder any force that exceeds the brake holding force listed in the catalog.

Mounting, installation and adjustment

⚠ WARNING

- With the JSG Series, the brakes can be manually released by screwing a hexagon socket head cap bolt into the brake release female thread on the top of the brakes. However, the brakes may be damaged if the bolt is screwed in too far; use the appropriate screw insertion depth for the release bolt shown in the table below.

Bore size	Suitable screw-in volume
ø40	3 rotations or less
ø50	4 rotations or less
ø63	4 rotations or less
ø80	4.5 rotations or less
ø100	5 rotations or less

- If there is any play, such as looseness, in the brake signal dog, stopping accuracy is affected. Securely fix to eliminate play, etc.

- If the piston speed is fast, the detection dog must be long enough to match relay response time. If the dog is short, the stop signal is not output and operation does not stop.

⚠ CAUTION

- Adjust the air balance in the cylinder.
  With brakes released, place a load on the cylinder and balance the load by adjusting pneumatic pressure applied to the cylinder rod side and head side. Malfunctions such as piston popping out during brake release or abnormal brake release can be prevented by accurately balancing the load.

- Adjust the installation position of the detector parts, including the cylinder switch.
  When braking, consider the overrun distance vis-a-vis the desired stop position and adjust the installation positions for detector parts, including the cylinder switch.

- Load fluctuations during the reciprocating stroke of the cylinder can cause inconsistent piston speed, leading to greater variation in the stop position. Adjust the mounting of the load so as to prevent any load fluctuations during the reciprocating stroke of the cylinder, especially before the stop position.

- Since the speed changes significantly in the cushioned range and in the acceleration range after starting operation, the variability of the stopping position will increase. For this reason, the accuracy described in the specifications may not be obtained when a step just after start of the operation has a short stroke to the next point.

- Load to piston rod
  Limit load movement using guides so play and torsion do not occur.

- Maintaining the rod sliding parts
  Protect the piston rod sliding surface from scratches and dents. Such scratches and dents can cause damage to packings, resulting in leakage and/or brake failure.

- Fixing the switch
  For screw fixing when using T2, T3, T0, or T5, use a flathead screwdriver (clockwork screwdriver, precision screwdriver, etc.) with a grip diameter of 5 to 6 mm, a 2.4 mm or smaller tip, and a thickness of 0.3 mm or less to tighten the screws with a tightening torque of 0.1 to 0.2 N·m.
  When using T2J, T2Y, or T3Y, tighten the screw with a tightening torque of 0.5 to 0.7 N·m.

LCM
LCR
LCG
LCW
LCX
STM
STG
STS/STL
STR2
UCA2
ULK*
JSK/M2
JSG
JSC3/JSC4
USSD
UFCD
USC
UB
JSB3
LMB
LML
HCM
HCA
LBC
CAC4
UCAC2
CAC-N
UCAC-N
RCS2
RCC2
PCC
SHC
MCP
GLC
MFC
BBS
RRC
GRC
RV3*
NHS
HRL
LN
Hand
Chuk
MecHnd/Chuk
ShkAbs
FJ
FK
SpdContr
Ending

Use/maintenance

⚠ WARNING

- The brake section can be removed from the cylinder body. Do not disassemble or inspect brakes, or a hazardous situation may occur when brakes are used again.
- The required grease is applied to brakes. Avoid applying extra grease and do not wipe grease off.
- The required grease is applied when brakes are replaced, so there is no need to apply grease to rods.
- Always use the product with the dust cover on, except for when performing manual release, in order to prevent failure or malfunction.

⚠ CAUTION

- Air supply pipes that are too narrow or too long can reduce stopping accuracy.
- Frictional resistance increases and causes the piston speed to change when the cylinder has been stopped for a long time, such as when using first thing in the morning or afternoon. This may impair stopping accuracy. Conduct conditioning operations to obtain a stable stopping accuracy.

JSC3/JSC4

Brake cylinder

ø40/ø50/ø63/ø80/ø100
ø125/ø140/ø160/ø180

With brake/position locking

Overview

A reliable brake is integrated to the medium bore size (ø40 to ø100 mm) series (SCA2) and large bore size (ø125 to ø180 mm) series (SCS2) among the standard cylinder lineup.

Operational principle

● Brake release operating principle

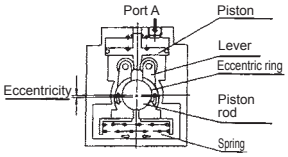

ⓐBrake release operating principle
Air supplied from port A pushes the piston under it and opens the lever. The eccentric rings directly connected to the lever rotate in the arrow direction and release the piston rod.

● Brake operating principle

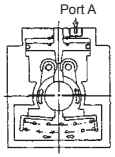

ⓑBrake operating principle
If air is discharged from port A, the eccentric rings rotate in the arrow direction with the spring force, generating an eccentric load on the piston rod to apply a braking force.

CONTENTS

Series variation	768
Option/variation combination selection table	770
● Double acting/single rod (JSC3)/No lubrication, large bore size (JSC4-N)	774
● Double acting/with valve for brake (JSC3-V)	810
● Double acting/low hydraulic (JSC3-H/JSC4-H)	818
● Double acting/heat resistant (JSC3-T/JSC4-T)	830
JSC3 Series common accessory dimensions	806
Brake cylinder common technical data	836
Brake cylinder common applications	837
⚠Safety precautions	838

Features

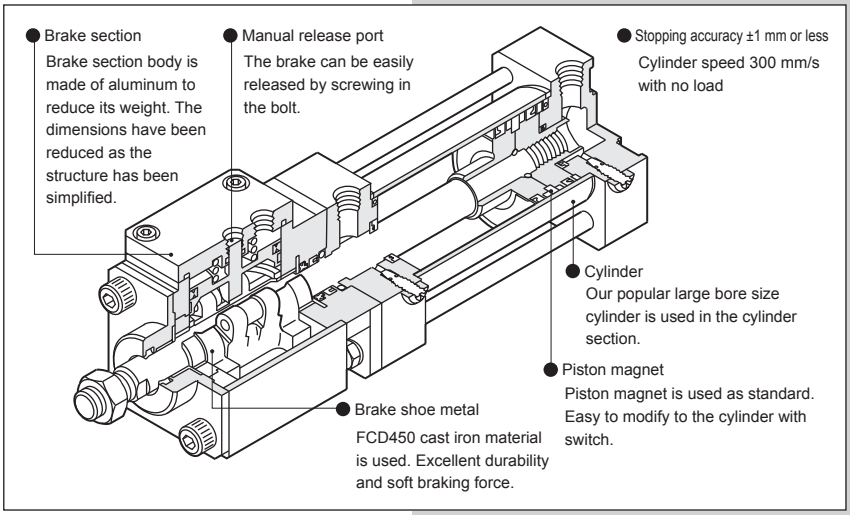

The cylinder switches T2YH, T2YV, T3YH, and T3YV are scheduled for end of production at the end of December 2023.

Brake cylinder JSC3/JSC4 Series

Variation	Model No. JIS symbol	Bore size (mm)	Standard stroke (mm) 50	75	100	150	200	250	300	350	400	450	500	Min. stroke (mm)	Max. stroke (mm)	Custom stroke (/mm)	Available stroke (mm)
Double acting	JSC3 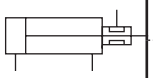	ø40												1	600	1	1600
		ø50	●	●	●	●	●	●	●	●	●	●	●				2000
		ø63															2500
		ø80	●	●	●	●	●	●	●	●	●	●	●	1	700		2500
		ø100	●	●	●	●	●	●	●	●	●	●	●		800		2500
	JSC4-N JSC4-LN	ø125/ø140/ø160	●	●	●	●	●	●	●						800		2000
		ø180	●	●	●	●	●	●	●						900		
Double acting, with valve for brake	JSC3-V 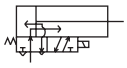	ø40												1	600	1	1000
		ø50	●	●	●	●	●	●	●	●	●	●	●				2000
		ø63															2500
		ø80	●	●	●	●	●	●	●	●	●	●	●	1	700		2500
		ø100	●	●	●	●	●	●	●	●	●	●	●		800		2500
Double acting/low hydraulic	JSC3-H 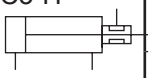	ø40												1	600	1	1600
		ø50	●	●	●	●	●	●	●	●	●	●	●				2000
		ø63															2500
		ø80	●	●	●	●	●	●	●	●	●	●	●	1	700		2500
		ø100	●	●	●	●	●	●	●	●	●	●	●		800		2500
	JSC4-H JSC4-LH	ø125/ø140/ø160	○	○	○	○	○	○	○	○	○	○	○		800		2000
		ø180	○	○	○	○	○	○	○	○	○	○	○		900		
Double acting/ heat resistant	JSC3-T 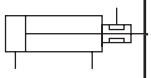	ø40												1	600	1	1600
		ø50	●	●	●	●	●	●	●	●	●	●	●				2000
		ø63															2500
		ø80	●	●	●	●	●	●	●	●	●	●	●	1	700		2500
		ø100	●	●	●	●	●	●	●	●	●	●	●		800		2500
	JSC4-T 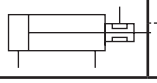	ø125/ø140/ø160	○	○	○	○	○	○	○	○	○	○	○		800		2000
		ø180	○	○	○	○	○	○	○	○	○	○	○		900		

●: Standard, ◎: Option, ○: Available (made-to-order product), ■: Not available

Mounting										Option							Accessory							
Basic	Axial foot	Rod side flangeype	Head side flange	Head side special flange	Eye bracket	Clevis bracket	Intermediate trunnion	Rod side trunnion	Head side trunnion	Bellows (100°C)	Bellows (250°C)	Piston rod material change	Cushion needle position R	Cushion needle position S	Cushion needle position T	With indicator	Rod eye	Rod clevis	Eye bracket	Clevis bracket	Eye bracket	Trunnion No. 2 bracket	Switch	Page
00	LB	FA	FB	FC	CA	CB	TC	TA	TB	J	L	M	R	S	T	G	I	Y	B1	B2	B3	B4		
●	●	●	●	●	●	●	●	●	●	◎	◎	◎	●	◎	◎	◎	◎	◎	◎	◎	◎	◎	◎	774
●	●	●	●	●	●	●	●	●	●	◎	◎	◎	●	◎	◎	◎	◎	◎	◎	◎	◎	◎	◎	
●	●	●	●	●	●	●	●	●	●	◎	◎	◎	●	◎	◎	◎	◎	◎	◎	◎	◎	◎	◎	
■	●	●	●	■	●	●	●	●	●	◎	◎	◎	◎	◎	◎	■	◎	◎	◎	◎	■	■	◎	
■	●	●	●	■	●	●	●	●	●	◎	◎	◎	◎	◎	◎	■	◎	◎	◎	◎	■	■	◎	
●	●	●	●	●	●	●	●	●	●	◎	◎	◎	●	◎	◎	◎	◎	◎	◎	◎	◎	◎	◎	810
●	●	●	●	●	●	●	●	●	●	◎	◎	◎	●	◎	◎	◎	◎	◎	◎	◎	◎	◎	◎	
●	●	●	●	●	●	●	●	●	●	◎	◎	◎	●	◎	◎	◎	◎	◎	◎	◎	◎	◎	◎	
●	●	●	●	●	●	●	●	●	●	◎	◎	◎	●	◎	◎	◎	◎	◎	◎	◎	◎	◎	◎	818
●	●	●	●	●	●	●	●	●	●	◎	◎	◎	●	◎	◎	◎	◎	◎	◎	◎	◎	◎	◎	
●	●	●	●	●	●	●	●	●	●	◎	◎	◎	●	◎	◎	◎	◎	◎	◎	◎	◎	◎	◎	
■	○	○	○	■	○	○	○	○	○	◎	◎	◎	◎	◎	◎	■	◎	◎	◎	◎	■	■	◎	
■	○	○	○	■	○	○	○	○	○	◎	◎	◎	◎	◎	◎	■	◎	◎	◎	◎	■	■	◎	
●	●	●	●	●	●	●	●	●	●	■	◎	◎	●	◎	◎	◎	◎	◎	◎	◎	◎	◎	■	830
●	●	●	●	●	●	●	●	●	●	■	◎	◎	●	◎	◎	◎	◎	◎	◎	◎	◎	◎	■	
●	●	●	●	●	●	●	●	●	●	■	◎	◎	●	◎	◎	◎	◎	◎	◎	◎	◎	◎	■	
■	○	○	○	■	○	○	○	○	○	■	◎	◎	◎	◎	◎	■	◎	◎	◎	◎	■	■	■	
■	○	○	○	■	○	○	○	○	○	■	◎	◎	◎	◎	◎	■	◎	◎	◎	◎	■	■	■	

LCM
LCR
LCG
LCW
LCX
STM
STG
STS/STL
STR2
UCA2
ULK*
JSK/M2
JSG
JSC3/JSC4
USSD
UFCD
USC
UB
JSB3
LMB
LML
HCM
HCA
LBC
CAC4
UCAC2
CAC-N
UCAC-N
RCS2
RCC2
PCC
SHC
MCP
GLC
MFC
BBS
RRC
GRC
RV3*
NHS
HRL
LN
Hand
Chuk
MecHnd/Chuk
ShkAbs
FJ
FK
SpdContr
Ending

Variation and option combination selection table

JSC3(ø40 to ø100)

* Refer to page 772 for information on cylinders with bore sizes ø125 to ø180.

●: Standard
◎: Option
○: Available (made-to-order product)
△: Available depending on conditions (Contact CKD.)
×: Not available

Category		Variation							Port thread			Option					
		Double acting basic	Cushioned	With valve	Low hydraulic	Heat resistance (120°C)	Strong magnetic field proof with cylinder switch		NPT	G		Polyolefin with bellows	Silicone rubber with bellows	Piston rod material stainless steel	Specify piston rod end form	Cushion needle position specification	With indicator
	Code	None	None	V	H	T	L2		N	G		J	L	M	N**	R.S.T	G
Variation	Double acting basic		◎	●	●	●	◎		○	○		*1	*1	◎	○	◎	◎
Variation	Cushioned			◎	◎	◎	◎		○	○		◎	◎	◎	○	◎	◎
Variation	With valve				△	×	◎		○	○		◎	◎	◎	○	◎	◎
Variation	Low hydraulic					×	○		○	○		◎	◎	◎	○	◎	◎
Variation	Heat resistance (120°C)						×		○	○		×	◎	◎	○	◎	◎
Variation	Strong magnetic field proof with cylinder switch								○	○		◎	◎	◎	○	◎	◎
Variation																	
Port thread	NPT									×		○	○	○	○	○	○
Port thread	G											○	○	○	○	○	○
Port thread																	
Option	Polyolefin with bellows												×	○	○	○	○
Option	Silicone rubber with bellows													○	○	○	○
Option	Piston rod material stainless steel														○	○	○
Option	Specify piston rod end form															○	○
Option	Cushion needle position specification																○
Option	With indicator																
Option																	
Accessory	Cylinder switch	◎	◎	◎	◎	×	◎					◎	◎	◎	○	◎	◎
Accessory	Rod eye	◎	◎	◎	◎	◎	◎					◎	◎	◎	○	◎	◎
Accessory	Rod clevis	◎	◎	◎	◎	◎	◎					◎	◎	◎	○	◎	◎
Accessory	Eye bracket	◎	◎	◎	◎	◎	◎					◎	◎	◎	○	◎	◎
Accessory	Clevis bracket	◎	◎	◎	◎	◎	◎					◎	◎	◎	○	◎	◎
Accessory	Trunnion bracket	◎	◎	◎	◎	◎	◎					◎	◎	◎	○	◎	◎
Accessory																	

Caution

*1: The max. stroke available for ø63 to ø100 bore size models with bellows is 2000 mm.

[Example of model No.]

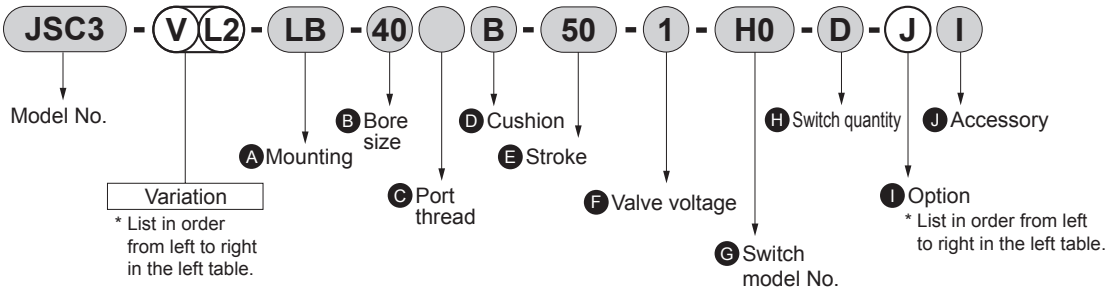

Model No.: Brake cylinder

● Variations: With valve and strong magnetic field proof switch

Ⓐ Mounting	: Axial foot
Ⓑ Bore size	: ø40 mm
Ⓒ Port thread	: Rc thread
Ⓓ Cushion	: Both sides cushioned
Ⓔ Stroke	: 50 mm
Ⓕ Valve voltage	: 100 VAC
Ⓖ Switch model No.	: Reed, strong magnetic field proof switch, lead wire 1 m
Ⓗ Switch Quantity	: 2
Ⓘ Option	: Bellows, max. ambient temperature 100°C
Ⓙ Accessory	: Rod eye

LCM
LCR
LCG
LCW
LCX
STM
STG
STS/STL
STR2
UCA2
ULK*
JSK/M2
JSG
JSC3/JSC4
USSD
UFCD
USC
UB
JSB3
LMB
LML
HCM
HCA
LBC
CAC4
UCAC2
CAC-N
UCAC-N
RCS2
RCC2
PCC
SHC
MCP
GLC
MFC
BBS
RRC
GRC
RV3*
NHS
HRL
LN
Hand
Chuk
MecHnd/Chuk
ShkAbs
FJ
FK
SpdContr
Ending

Variation and option combination selection table

JSC4(ø125 to ø180)

* Refer to page 770 for information on cylinders with bore sizes ø40 to ø100.

●: Standard
◎: Option
○: Available (made-to-order product)
△: Available depending on conditions (Contact CKD.)
×: Not available

Category		Category	Variation					Port thread		Option		
			Double acting basic	Cushioned	With cylinder switch	Low hydraulic	Heat resistance (120°C)	NPT	G	Neoprene with bellows	Silicone rubber with bellows	Piston rod material stainless steel
		Code	N		L	H	T	N	G	J	L	M
Variation	Double acting basic (no-lubrication)	N		◎	◎			○	○	◎	◎	◎
Variation	Cushioned				◎	○	○	○	○	◎	◎	◎
Variation	With cylinder switch	L				○	×	○	○	◎	◎	◎
Variation	Low hydraulic	H					×	○	○	◎	◎	◎
Variation	Heat resistance (120°C)	T						○	○	×	◎	◎
Port thread	NPT	N							×	○	○	○
Port thread	G	G								○	○	○
Option	Neoprene with bellows	J									×	○
Option	Silicone rubber with bellows	L										○
Option	Piston rod material stainless steel	M										
Accessory	Cylinder switch	Listed separately	◎	◎	◎	◎	×			◎	◎	◎
Accessory	Rod eye	I	◎	◎	◎	◎	◎			◎	◎	◎
Accessory	Rod clevis	Y	◎	◎	◎	◎	◎			◎	◎	◎
Accessory	Eye bracket	B1	◎	◎	◎	◎	◎			◎	◎	◎
Accessory	Clevis bracket	B2	◎	◎	◎	◎	◎			◎	◎	◎

[Example of model No.]

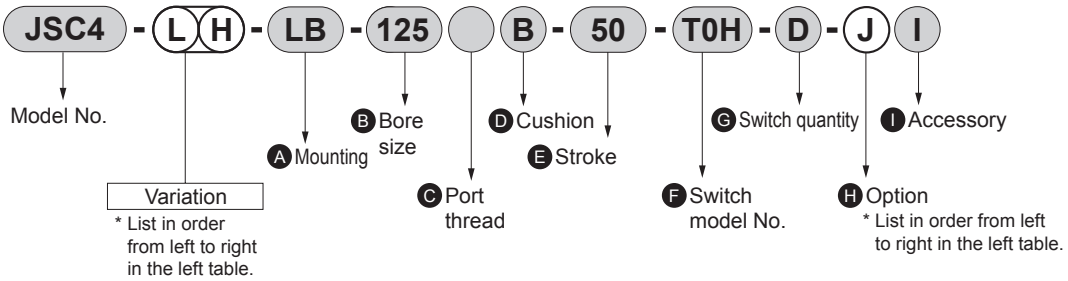

Model No.

● Variation: Low hydraulic with switch

Ⓐ Mounting	: Axial foot
Ⓑ Bore size	: ø125 mm
Ⓒ Port thread	: Rc thread
Ⓓ Cushion	: Both sides cushioned
Ⓔ Stroke	: 50 mm
Ⓕ Switch model No.	: Reed T0H switch, lead wire 1 m
Ⓖ Switch Quantity	: 2
Ⓗ Option	: Bellows for max. ambient temperature 60°C
Ⓘ Accessory	: Rod eye

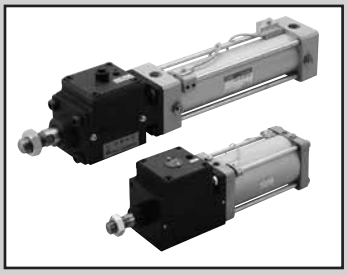

Brake cylinder: Double acting, single rod/double acting, no-lubrication

JSC3/JSC4-N Series

● Bore size:
JSC3: ø40/ø50/ø63/ø80/ø100
JSC4: ø125/ø140/ø160/ø180

JIS symbol

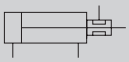

RoHS CAD

Specifications

Item		JSC3 (with switch)					JSC3-S (with switch)					JSC4-N			
Bore size mm		ø40	ø50	ø63	ø80	ø100	ø40	ø50	ø63	ø80	ø100	ø125	ø140	ø160	ø180
Actuation		Double acting					Double acting/low pressure release					Double acting			
Working fluid		Compressed air													
Max. working pressure MPa		1.0 (≈150 psi, 10 bar)													
Min. working pressure MPa	Brake section	0.3 (≈44 psi, 3 bar)					0.25 (≈36 psi, 2.5 bar)					0.3 (≈44 psi, 3 bar)			
	Cylinder	0.1 (≈15 psi, 1 bar)					0.1 (≈15 psi, 1 bar)					0.05 (≈7.3 psi, 0.5 bar)			
Proof pressure MPa		1.6 (≈230 psi, 16 bar)													
Ambient temperature °C		-10 (14°F) to 60 (140°F) (no freezing)					-10 (14°F) to 60 (140°F) (no freezing)					-5 (23°F) to 60 (140°F) (no freezing)			
Port size	Brake section	Rc1/8		Rc1/4		Rc3/8	Rc1/8		Rc1/4		Rc3/8	Rc1/2			
	Cylinder	Rc1/4	Rc3/8		Rc1/2		Rc1/4	Rc3/8		Rc1/2		Rc1/2	Rc3/4		
Stroke tolerance mm		$^{+0.9}_{0}$ (to 360) $^{+1.4}_{0}$ (to 1000)					$^{+1.0}_{0}$ (to 360) $^{+1.4}_{0}$ (to 1000)					$^{+1.0}_{0}$ (to 300), $^{+1.4}_{0}$ (to 1000), $^{+1.8}_{0}$ (to 2000)			
Working piston speed mm/s		50 to 1000 (Operate within the allowable absorbed energy.)													
Cushion		Air cushion													
Effective air cushion length mm		14.6	16.6		20.6	23.6	14.6	16.6		20.6	23.6	21.6			
Lubrication		Not required (use turbine oil class 1 ISO VG32 if necessary for lubrication)													
Holding force N		980	1569	2451	3922	6178	784	1255	1961	3138	4941	9600	12000	15800	20000
Allowable absorbed energy J	Cushioned	4.29	8.37	15.8	27.9	49.8	4.29	8.37	15.8	27.9	49.8	63.6	91.5	116	152
	Without cushion	0.067	0.079	0.079	0.201	0.301	0.067	0.079	0.079	0.201	0.301	0.371	0.386	0.386	0.958
		Note: Without any cushion, this product cannot absorb large energy generated by an external load. We recommend using an external shock absorber.													

Stroke

Bore size (mm)		Standard stroke (mm)	Max. stroke (mm)	Available stroke (mm)	Min. stroke (mm)
JSC3	ø40	50, 75, 100, 150, 200, 250, 300, 350, 400, 450, 500	600	1600	1
	ø50			2000	
	ø63			2500 *2	
	ø80		700		
	ø100		800		
JSC4	ø125	50, 75, 100, 150, 200, 250, 300	800	2000	
	ø140				
	ø160				
	ø180		900		

*1 : If the max. stroke is exceeded, product specifications may not be met, depending on operating conditions. Refer to Ending Page 69 for details.
The custom stroke is available in 1 mm increments.
*2 : The max. stroke available for ø63 to ø100 bore size models with bellows is 2000 mm.

Min. stroke with switch (T switch)

● Min. stroke with T0/T5 switches

Switch quantity	Different surface mounting				Same surface mounting				Center trunnion mounting				Rod side trunnion mounting Position cannot be detected at the rod side stroke end.	Head side trunnion mounting No position detection at head side stroke end.
Bore size	1	2	3	4	1	2	3	4	1	2	3	4	1	1
ø40	20(10)	20(20)	40(40)	60(60)	20(10)	60(45)	105(75)	150(105)	110(110)	110(110)	175(145)	175(145)	50(50)	50(50)
ø50	15(10)	20(20)	40(40)	60(60)	15(10)	20(20)	65(50)	65(60)	135(135)	135(135)	135(135)	135(135)	60(60)	60(60)
ø63	15(10)	20(20)	40(40)	60(60)	15(10)	20(20)	70(55)	70(60)	110(95)	110(95)	110(100)	110(100)	50(45)	50(45)
ø80	15(15)	25(25)	45(45)	65(65)	15(15)	25(25)	70(55)	70(65)	115(85)	115(85)	115(105)	115(105)	55(40)	55(40)
ø100	15(15)	25(25)	45(45)	70(70)	15(15)	25(25)	70(55)	70(70)	125(95)	125(95)	125(115)	125(115)	60(45)	60(45)

*1 : The values in ( ) are of T*V (radial lead wire).
*2 : When the stroke is 15 mm or less, the two switches could turn ON at the same time. In this case, adjust switch mounting positions to be as far apart as possible.

LCM
LCR
LCG
LCW
LCX
STM
STG
STS/STL
STR2
UCA2
ULK*
JSK/M2
JSG
JSC3/JSC4
USSD
UFCD
USC
UB
JSB3
LMB
LML
HCM
HCA
LBC
CAC4
UCAC2
CAC-N
UCAC-N
RCS2
RCC2
PCC
SHC
MCP
GLC
MFC
BBS
RRC
GRC
RV3*
NHS
HRL
LN
Hand
Chuk
MecHnd/Chuk
ShkAbs
FJ
FK
SpdContr
Ending

Min. stroke with JSC3 switch (T switch)

● T8 min. stroke with switch

Switch quantity	Different surface mounting				Same surface mounting				Center trunnion mounting				Rod side trunnion mounting Position cannot be detected at the rod side stroke end.	Head side trunnion mounting No position detection at head side stroke end.
Bore size	1	2	3	4	1	2	3	4	1	2	3	4	1	1
ø40	15(10)	20(20)	40(40)	60(60)	15(10)	50(35)	95(65)	140(95)	95(85)	95(85)	155(125)	155(125)	45(40)	45(40)
ø50	10(10)	20(20)	40(40)	60(60)	10(10)	20(20)	70(55)	70(60)	115(115)	115(115)	135(135)	135(135)	50(50)	50(50)
ø63	10(10)	20(20)	40(40)	60(60)	10(10)	20(20)	70(55)	70(60)	95(75)	95(75)	110(110)	110(110)	45(35)	45(35)
ø80	15(15)	25(25)	45(45)	65(65)	15(15)	25(25)	70(55)	70(65)	100(70)	100(70)	115(115)	115(115)	50(35)	50(35)
ø100	15(15)	25(25)	45(45)	65(65)	15(15)	25(25)	70(55)	70(65)	110(80)	110(80)	125(125)	125(125)	55(40)	55(40)

*1: The values in ( ) are of T*V (radial lead wire).
*2: When the stroke is 15 mm or less, the two switches could turn ON at the same time. In this case, adjust switch mounting positions to be as far apart as possible.

● Min. stroke with T2/T3 switches

Switch quantity	Different surface mounting				Same surface mounting				Center trunnion mounting				Rod side trunnion mounting Position cannot be detected at the rod side stroke end.	Head side trunnion mounting No position detection at head side stroke end.
Bore size	1	2	3	4	1	2	3	4	1	2	3	4	1	1
ø40	20(10)	20(15)	25(25)	40(40)	20(10)	60(45)	105(75)	150(105)	105(75)	105(75)	165(135)	165(135)	50(35)	50(35)
ø50	15(10)	15(15)	25(25)	40(40)	15(10)	15(15)	60(45)	60(45)	105(75)	105(75)	105(75)	105(75)	45(30)	45(30)
ø63	15(10)	15(15)	25(25)	40(40)	15(10)	15(15)	60(45)	60(45)	110(80)	110(80)	110(85)	110(85)	50(35)	50(35)
ø80	15(10)	15(15)	30(30)	45(45)	15(10)	15(15)	60(45)	60(45)	115(85)	115(85)	115(90)	115(90)	55(40)	55(40)
ø100	10(10)	15(15)	30(30)	45(45)	10(10)	15(15)	60(45)	60(45)	125(95)	125(95)	125(100)	125(100)	60(45)	60(45)

*1: The values in ( ) are of T*V (radial lead wire).
*2: When the stroke is 15 mm or less, the two switches could turn ON at the same time. In this case, adjust switch mounting positions to be as far apart as possible.

● Min. stroke with T1/T2Y/T3Y/T2YD switches

	Different surface mounting				Same surface mounting				Center trunnion mounting				Rod side trunnion mounting Position cannot be detected at the rod side stroke end.	Head side trunnion mounting No position detection at head side stroke end.
Switch quantity	1	2	3	4	1	2	3	4	1	2	3	4	1	1
ø40	20(10)	20(15)	25(25)	40(40)	20(10)	60(45)	105(75)	150(105)	105(75)	105(75)	165(135)	165(135)	50(35)	50(35)
ø50	15(10)	15(15)	25(25)	40(40)	15(10)	15(15)	60(45)	60(45)	100(70)	100(70)	100(75)	100(75)	45(30)	45(30)
ø63	15(10)	15(15)	25(25)	40(40)	15(10)	15(15)	60(45)	60(45)	105(75)	105(75)	105(85)	105(85)	50(35)	50(35)
ø80	15(10)	15(15)	30(30)	45(45)	15(10)	15(15)	60(45)	60(45)	110(80)	110(80)	110(90)	110(90)	55(40)	55(40)
ø100	10(10)	15(15)	30(30)	45(45)	10(10)	15(15)	60(45)	60(45)	120(90)	120(90)	120(100)	120(100)	60(45)	60(45)

*1: The values in ( ) are of T*V (radial lead wire). T2YD does not have a radial lead wire (V).
*2: When the stroke is 15 mm or less, the two switches could turn ON at the same time. In this case, adjust switch mounting positions to be as far apart as possible.

● Min. stroke with T2W/T3W switches

	Different surface mounting				Same surface mounting				Center trunnion mounting				Rod side trunnion mounting Position cannot be detected at the rod side stroke end.	Head side trunnion mounting No position detection at head side stroke end.
Switch quantity	1	2	3	4	1	2	3	4	1	2	3	4	1	1
ø40	20(5)	20(10)	20(15)	25(25)	20(5)	65(50)	110(80)	155(110)	110(80)	110(80)	170(140)	170(140)	50(35)	50(35)
ø50	20(5)	20(10)	20(15)	20(20)	20(5)	20(10)	65(40)	65(40)	110(80)	110(80)	110(60)	110(60)	50(35)	50(35)
ø63	20(5)	20(10)	20(15)	25(25)	20(5)	20(10)	65(40)	65(40)	115(85)	115(85)	115(65)	115(65)	55(40)	55(40)
ø80	15(5)	15(10)	15(15)	25(25)	15(5)	15(10)	60(40)	60(40)	120(90)	120(90)	120(70)	120(70)	55(40)	55(40)
ø100	10(5)	10(10)	20(20)	25(25)	10(5)	10(10)	60(40)	60(40)	130(100)	130(100)	130(85)	130(85)	60(45)	60(45)

*1: The values in ( ) are of T*V (radial lead wire).
*2: When the stroke is 15 mm or less, the two switches could turn ON at the same time. In this case, adjust switch mounting positions to be as far apart as possible.

Min. stroke with JSC4 switch (T switch)

● ø125 to ø180

(Unit: mm)

Item / Bore size (mm)	Stroke when mounted on the same surface	Center trunnion mounting stroke	Rod side trunnion mounting stroke	Head side trunnion mounting stroke
	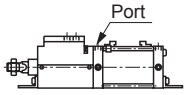	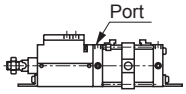	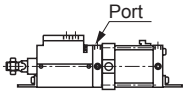	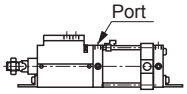
ø125	20 or more	120 or more	70 or more	
ø140		125 or more	75 or more	
ø160		130 or more	80 or more	
ø180		135 or more	85 or more	

LCM
LCR
LCG
LCW
LCX
STM
STG
STS/STL
STR2
UCA2
ULK*
JSK/M2
JSG
JSC3/JSC4
USSD
UFCD
USC
UB
JSB3
LMB
LML
HCM
HCA
LBC
CAC4
UCAC2
CAC-N
UCAC-N
RCS2
RCC2
PCC
SHC
MCP
GLC
MFC
BBS
RRC
GRC
RV3*
NHS
HRL
LN
Hand
Chuk
MecHnd/Chuk
ShkAbs
FJ
FK
SpdContr
Ending

Switch specifications (T type switch)

● 1-color/2-color LED/for AC magnetic field proof

Item	Proximity 2-wire	Proximity 2-wire			Proximity 3-wire				Reed 2-wire							Proximity 2-wire
	T1H/ T1V	T2H/T2V/ T2JH/T2JV	T2YH/ T2YV	T2WH/ T2WV	T3H/ T3V	T3PH/ T3PV	T3YH/ T3YV	T3WH/ T3WV	T0H/T0V		T5H/T5V		T8H/T8V			T2YD(*4) T2YDT
Applications	For programmable controller, relay, compact solenoid valve	Dedicated for programmable controller			For programmable controller, relay				For programmable controller, relay		For programmable controller, relay, IC circuit (no indicator lamp), serial connection		For programmable controller, relay			For programmable controller
Output method	-				NPN output	PNP output	NPN output	NPN output	-							
Pwr. supp. V.	-				10 to 28 VDC				-							
Load voltage	85 to 265 VAC	10 to 30 VDC		24 VDC ±10%	30 VDC or less				12/24 VDC	110 VAC	5/12/24 VDC	110 VAC	12/24 VDC	110 VAC	220 VAC	24 VDC ±10%
Load current	5 to 100 mA	5 to 20 mA (*3)			100 mA or less		50 mA or less		5 to 50 mA	7 to 20 mA	≤50 mA	≤20 mA	5 to 50 mA	7 to 20 mA	7 to 10 mA	5 to 20 mA
Indicator lamp	LED (Lit when ON)	LED (Lit when ON)	Red/green LED (Lit when ON)	Red/green LED (Lit when ON)	LED (Lit when ON)	Yellow LED (Lit when ON)	Red/green LED (Lit when ON)	Red/green LED (Lit when ON)	LED (Lit when ON)		Without LED		LED (Lit when ON)			Red/green LED (Lit when ON)
Leakage current	≤ 1 mA at 100 VAC, ≤ 2 mA at 200 VAC	1 mA or less			10 μA or less				0 mA							1 mA or less
Weight g	1 m:33 3 m:87 5 m:142	1 m:18 3 m:49 5 m:80	1 m:33 3 m:87 5 m:142	1 m:18 3 m:49 5 m:80	1 m:18 3 m:49 5 m:80		1 m:33 3 m:87 5 m:142	1 m:18 3 m:49 5 m:80	1 m:18 3 m:49 5 m:80				1 m:33 3 m:87 5 m:142			1 m:61 3 m:166 5 m:272

*1 : Refer to Ending Page 1 for detailed switch specifications and dimensions.
*2 : Switches other than the above models, such as switches with connectors, are also available. Refer to Ending Page 1.
*3 : The max. load current is 20 mA at 25°C. The current is lower than 20 mA if the operating ambient temperature around the switch is higher than 25°C. (5 to 10 mA at 60°C)
*4 : AC magnetic field proof switch (T2YD/T2YDT) cannot be used in DC magnetic fields.

LCM
LCR
LCG
LCW
LCX
STM
STG
STS/STL
STR2
UCA2
ULK*
JSK/M2
JSG
JSC3/JSC4
USSD
UFCD
USC
UB
JSB3
LMB
LML
HCM
HCA
LBC
CAC4
UCAC2
CAC-N
UCAC-N
RCS2
RCC2
PCC
SHC
MCP
GLC
MFC
BBS
RRC
GRC
RV3*
NHS
HRL
LN
Hand
Chuk
MecHnd/Chuk
ShkAbs
FJ
FK
SpdContr
Ending

Cylinder weight

● JSC3(ø40 to ø100)

[Unit: kg]

Item/mounting / Bore size (mm)	Product weight when stroke (S) = 0 mm						Switch weight	Mounting bracket weight		Additional weight per S = 100 mm
	Basic (00)	Foot (LB)	Flange (FA, FB)	Eye bracket (CA)	Clevis bracket (CB)	Trunnion (TC)		T type	H type	
ø40	2.48	2.66	2.91	2.83	2.83	2.86	Refer to the weight in the switch specifications.	0.024	0.028	0.39
ø50	3.47	3.67	3.97	3.87	3.87	3.97		0.022	0.026	0.46
ø63	5.09	5.49	6.19	5.79	5.79	5.89		0.020	0.024	0.50
ø80	8.15	8.85	9.95	9.65	9.65	9.45		0.026	0.029	0.90
ø100	14.70	15.70	17.40	16.90	16.90	17.30		0.024	0.028	1.12

(Example) Product weight of JSC3-LB-50B-200-T0H-D

Product weight for stroke 0 mm ..... 3.67 kg
Additional weight for stroke 200 mm ..... $0.46 \times \frac{200}{100} = 0.92$ kg
Weight of 2 TOH switches ..... 0.018x2=0.036 kg
Weight of 2 mounting brackets ..... 0.022x2=0.044 kg
Product weight ..... 3.67+0.92+0.036+0.044=4.670 kg

● JSC4(ø125 to ø180)

(Unit: kg)

Item/mounting / Bore size (mm)	Product weight when stroke (S) = 0 mm					Switch weight		Additional weight per S = 100 mm
	Axial foot (LB)	Flange (FA/FB)	Eye bracket (CA)	Clevis bracket (CB)	Trunnion (TA/TB/TC)	Switch	Mounting bracket	
ø125	25.72	27.52	27.22	27.32	27.62	Refer to the weight in the switch specifications.	0.028	1.54
ø140	32.95	36.35	34.75	34.95	34.15		0.030	1.78
ø160	42.85	46.65	44.75	45.05	46.15		0.034	2.22
ø180	61.55	69.05	64.45	64.95	65.15		0.038	2.96

(Example) Product weight of JSC4-LN-LB-125B-300-T0H-D

Product weight when S = 0 mm ..... 25.72 kg
Additional weight when S = 300 mm ..... $1.54 \times \frac{300}{100} = 4.62$ kg
Weight of 2 switches (T0H-D) ..... 0.018x2=0.036 kg
Weight of 2 switch brackets ..... 0.028x2=0.056 kg
Product weight ..... 25.72 + 4.62 + 0.036 + 0.056=30.432 kg

Theoretical thrust table

(Unit: N)

Bore size (mm)		Operating direction	Working pressure MPa										
			0.1	0.15	0.2	0.3	0.4	0.5	0.6	0.7	0.8	0.9	1.0
JSC3	ø40	Push	1.26×10^{2}	1.88×10^{2}	2.51×10^{2}	3.77×10^{2}	5.03×10^{2}	6.28×10^{2}	7.54×10^{2}	8.80×10^{2}	1.01×10^{3}	1.13×10^{3}	1.26×10^{3}
		Pull	1.06×10^{2}	1.58×10^{2}	2.11×10^{2}	3.17×10^{2}	4.22×10^{2}	5.28×10^{2}	6.33×10^{2}	7.39×10^{2}	8.44×10^{2}	9.50×10^{2}	1.06×10^{3}
	ø50	Push	1.96×10^{2}	2.95×10^{2}	3.93×10^{2}	5.89×10^{2}	7.85×10^{2}	9.82×10^{2}	1.18×10^{3}	1.37×10^{3}	1.57×10^{3}	1.77×10^{3}	1.96×10^{3}
		Pull	1.65×10^{2}	2.47×10^{2}	3.30×10^{2}	4.95×10^{2}	6.60×10^{2}	8.25×10^{2}	9.90×10^{2}	1.15×10^{3}	1.32×10^{3}	1.48×10^{3}	1.65×10^{3}
	ø63	Push	3.12×10^{2}	4.68×10^{2}	6.23×10^{2}	9.35×10^{2}	1.25×10^{3}	1.56×10^{3}	1.87×10^{3}	2.18×10^{3}	2.49×10^{3}	2.81×10^{3}	3.12×10^{3}
		Pull	2.80×10^{2}	4.20×10^{2}	5.61×10^{2}	8.41×10^{2}	1.12×10^{3}	1.40×10^{3}	1.68×10^{3}	1.96×10^{3}	2.24×10^{3}	2.52×10^{3}	2.80×10^{3}
	ø80	Push	5.03×10^{2}	7.54×10^{2}	1.01×10^{3}	1.51×10^{3}	2.01×10^{3}	2.51×10^{3}	3.02×10^{3}	3.52×10^{3}	4.02×10^{3}	4.52×10^{3}	5.03×10^{3}
		Pull	4.54×10^{2}	6.80×10^{2}	9.07×10^{2}	1.36×10^{3}	1.81×10^{3}	2.27×10^{3}	2.72×10^{3}	3.17×10^{3}	3.63×10^{3}	4.08×10^{3}	4.54×10^{3}
	ø100	Push	7.85×10^{2}	1.18×10^{3}	1.57×10^{3}	2.36×10^{3}	3.14×10^{3}	3.93×10^{3}	4.71×10^{3}	5.50×10^{3}	6.28×10^{3}	7.07×10^{3}	7.85×10^{3}
		Pull	7.15×10^{2}	1.07×10^{3}	1.43×10^{3}	2.14×10^{3}	2.86×10^{3}	3.57×10^{3}	4.29×10^{3}	5.00×10^{3}	5.72×10^{3}	6.43×10^{3}	7.15×10^{3}
JSC4	ø125	Push	1.23×10^{3}	1.84×10^{3}	2.45×10^{3}	3.68×10^{3}	4.91×10^{3}	6.14×10^{3}	7.36×10^{3}	8.59×10^{3}	9.82×10^{3}	1.10×10^{4}	1.23×10^{4}
		Pull	1.13×10^{3}	1.70×10^{3}	2.26×10^{3}	3.39×10^{3}	4.52×10^{3}	5.65×10^{3}	6.79×10^{3}	7.92×10^{3}	9.05×10^{3}	1.02×10^{4}	1.13×10^{4}
	ø140	Push	1.54×10^{3}	2.31×10^{3}	3.08×10^{3}	4.62×10^{3}	6.16×10^{3}	7.70×10^{3}	9.24×10^{3}	1.08×10^{4}	1.23×10^{4}	1.39×10^{4}	1.54×10^{4}
		Pull	1.44×10^{3}	2.16×10^{3}	2.89×10^{3}	4.33×10^{3}	5.77×10^{3}	7.22×10^{3}	8.66×10^{3}	1.01×10^{4}	1.15×10^{4}	1.30×10^{4}	1.44×10^{4}
	ø160	Push	2.01×10^{3}	3.02×10^{3}	4.02×10^{3}	6.03×10^{3}	8.04×10^{3}	1.01×10^{4}	1.21×10^{4}	1.41×10^{4}	1.61×10^{4}	1.81×10^{4}	2.01×10^{4}
		Pull	1.88×10^{3}	2.83×10^{3}	3.77×10^{3}	5.65×10^{3}	7.54×10^{3}	9.42×10^{3}	1.13×10^{4}	1.32×10^{4}	1.51×10^{4}	1.70×10^{4}	1.88×10^{4}
	ø180	Push	2.54×10^{3}	3.82×10^{3}	5.09×10^{3}	7.63×10^{3}	1.02×10^{4}	1.27×10^{4}	1.53×10^{4}	1.78×10^{4}	2.04×10^{4}	2.29×10^{4}	2.54×10^{4}
		Pull	2.39×10^{3}	$3.58+10^{3}$	4.77×10^{3}	7.16×10^{3}	9.54×10^{3}	1.19×10^{4}	1.43×10^{4}	1.67×10^{4}	1.91×10^{4}	2.15×10^{4}	2.39×10^{4}

LCM
LCR
LCG
LCW
LCX
STM
STG
STS/STL
STR2
UCA2
ULK*
JSK/M2
JSG
JSC3/JSC4
USSD
UFCD
USC
UB
JSB3
LMB
LML
HCM
HCA
LBC
CAC4
UCAC2
CAC-N
UCAC-N
RCS2
RCC2
PCC
SHC
MCP
GLC
MFC
BBS
RRC
GRC
RV3*
NHS
HRL
LN
Hand
Chuk
MecHnd/Chuk
ShkAbs
FJ
FK
SpdContr
Ending

How to order (ø40 to ø100)

Without switch (built-in magnet for switch)

JSC3 - ◯ —— LB - 40 ◯ B - 50 —— S I

With switch (built-in magnet for switch)

JSC3 - ◯ —— LB - 40 ◯ B - 50 - T0H - R - S I

With strong magnetic field proof (for H0, H0Y switches) switch (built-in magnet for switch)

JSC3 - ◯ L2 - LB - 40 ◯ B - 50 - H0 - R - S I

Model No.

Ⓐ Brake release pressure

Ⓑ Mounting *1

Ⓒ Bore size

Ⓓ Port thread

Ⓔ Cushion

Ⓕ Stroke *2 *3 *4

Ⓖ Switch model No. * indicates the lead wire length.

Ⓗ Switch quantity *5

Ⓘ Option *6 *7

Ⓙ Accessory *8

Code	Description
Ⓐ Brake release pressure	
Blank	Standard (0.3 MPa)
S	Low pressure release (0.25 MPa)
Ⓑ Mounting	
00	Basic
LB	Axial foot
FA	Rod side flange
FB	Head side flange
FC	Head side special flange
CA	Eye bracket
CB	Clevis bracket (pin and snap ring attached)
TC	Intermediate trunnion
TA	Rod side trunnion
TB	Head side trunnion
Ⓒ Bore size (mm)	
40	ø40
50	ø50
63	ø63
80	ø80
100	ø100
Ⓓ Port thread	
Blank	Rc thread
N	NPT thread (made-to-order product)
G	G thread (made-to-order product)
Ⓔ Cushion	
B	Both sides cushioned
R	Rod side cushioned
H	Head side cushioned
N	Without cushion

Ⓕ Stroke (mm)

Bore size	Stroke *4	Available stroke	Custom stroke
ø40	**1 to 600**	**1600**	**In 1 mm increments**
ø50	**1 to 600**	**2000**	
ø63	**1 to 600**	**2500**	
ø80	**1 to 700**	**2500**	
ø100	**1 to 800**	**2500**	

Ⓖ Switch model No.

Refer to the switch model numbers on the following page.

*** Lead wire length**	
Blank	1 m (standard)
3	3 m (option)
5	5 m (option)
Ⓗ Switch quantity	
R	1 on rod side
H	1 on head side
D	2
T	3
4	4 (when there are more than 4 switches, indicate switch quantity.)

Ⓘ Option

		Max. ambient temperature	instantaneous max. temp
J	Bellows	100°C	200°C
L	Bellows	250°C	400°C
M	Piston rod material (stainless steel)		
Blank	Cushion needle position R (standard)		
S	Cushion needle position S		
T	Cushion needle position T		
G	With indicator		

Ⓙ Accessory	
I	Rod eye
Y	Rod clevis (pin and snap ring attached)
B1	Eye bracket
B2	Clevis bracket (pin and snap ring attached)
B3	Eye bracket
B4	Trunnion No. 2 bracket (2 pcs./set)

⚠ Precautions for model No. selection

*1 : Mounting bracket will be shipped assembled with the product.
(Head side special flange is attached separately)
*2 : If the stroke exceeds the max. stroke, refer to Ending Page 69.
*3 : The max. stroke available for ø63 to ø100 bore size models with bellows is 2000 mm.
*4 : Refer to page 774 for the min. stroke with switch.
*5 : When selecting TA or TB as mounting, the switch quantity is limited to "H" (1 on head side) for TA, and "R" (1 on rod side) for TB.
*6 : For S, T, and G position indications, check the respective dimensions.
*7 : When selecting TA or TB mounting format, the cushion needle position cannot be changed. (Cushion needle position S is used with no symbol.)
*8 : "I" and "Y" cannot be selected together.
*9 : Refer to Ending Page 85 for custom specifications of rod end form.

[Example of model No.]

JSC3-LB-40B-50-T0H-R-SI

Model: Brake cylinder double acting

Ⓐ Brake release pressure : Standard 0.3 MPa
Ⓑ Mounting : Axial foot
Ⓒ Bore size : ø40 mm
Ⓓ Port thread : Rc thread
Ⓔ Cushion : Both sides cushioned
Ⓕ Stroke : 50 mm
Ⓖ Switch model No. : Reed switch T0H, lead wire 1 m
Ⓗ Switch quantity : 1 on rod side
Ⓘ Option : Cushion needle position S
Ⓙ Accessory : Rod eye

LCM
LCR
LCG
LCW
LCX
STM
STG
STS/STL
STR2
UCA2
ULK*
JSK/M2
JSG
JSC3/JSC4
USSD
UFCD
USC
UB
JSB3
LMB
LML
HCM
HCA
LBC
CAC4
UCAC2
CAC-N
UCAC-N
RCS2
RCC2
PCC
SHC
MCP
GLC
MFC
BBS
RRC
GRC
RV3*
NHS
HRL
LN
Hand
Chuk
MecHnd/Chuk
ShkAbs
FJ
FK
SpdContr
Ending

[G] Switch model No.

T type switch						
Axial lead wire	Radial lead wire	Contact	Voltage AC	Voltage DC	Indicator	Lead wire
TOH*	TOV*	Reed	●	●	1-color LED	2-wire
T5H*	T5V*	Reed	●	●	Without LED	2-wire
T8H*	T8V*	Reed	●	●	1-color LED	2-wire
T1H*	T1V*	Proximity	●		1-color LED	2-wire
T2H*	T2V*	Proximity		●	1-color LED	2-wire
T3H*	T3V*	Proximity		●	1-color LED	3-wire
T2WH*	T2WV*	Proximity		●	2-color LED	2-wire
T2YH*	T2YV*	Proximity		●	2-color LED	2-wire
T3WH*	T3WV*	Proximity		●	2-color LED	3-wire
T3YH*	T3YV*	Proximity		●	2-color LED	3-wire
T3PH*	T3PV*	Proximity		●	1-color LED	3-wire
T2YD*	-	Proximity		●	2-color LED	2-wire
T2YDT*	-	Proximity		●	AC magnetic field	2-wire
T2JH*	T2JV*	Proximity		●	1-color LED off-delay	2-wire
H type switch						
HO*	-	Reed	●	●	Strong magnetic field proof	2-wire
HOY*	-	Reed		●	Strong magnetic field 2-color LED	2-wire

How to order brake unit

JSC3 - 40 - BRAKE-UNIT

Bore size (Item Ⓒ on page 778)

● Mounting FA

JSC3 - FA - 40 - BRAKE-UNIT

Bore size (Item Ⓒ on page 778)

How to order T type switch

● Switch body + mounting bracket set

JSC3 - T0H - 40

Switch model No. (Item Ⓖ)
Bore size (Item Ⓒ on page 778)

● Switch body only

SW - T0H

Switch model No. (Item Ⓖ)

● Mounting bracket set

JSC3 - TS - 40

Mounting bracket
Bore size (Item Ⓒ on page 778)

How to order T2YD type switch

● Switch body + mounting bracket set
·ø40 to ø100

JSC3 - T2YD - 40

Switch model No. (Item Ⓖ)
Bore size (Item Ⓒ on page 778)

● Switch body only
·ø40 to ø100

SW - T2YD

Switch model No. (Item Ⓖ)

● Mounting bracket set

JSC3 - T - 40

Mounting bracket
Bore size (Item Ⓒ on page 778)

How to order H type switch

● Switch body + mounting bracket set

JSC3-L2 - H0 - 40

Switch model No. (Item Ⓖ)
Bore size (Item Ⓒ on page 778)

● Switch body only

SW - H0

Switch model No. (Item Ⓖ)

● Mounting bracket set

JSC3-L2 - H - 40

Mounting bracket
Bore size (Item Ⓒ on page 778)

How to order mounting bracket

● ø40 to ø100

Bore size (mm) / Mounting bracket	ø40	ø50	ø63	ø80	ø100
Foot (LB) *1	JSC3-40-LB	JSC3-50-LB	JSC3-63-LB	JSC3-80-LB	JSC3-100-LB
Flange (FB)	JSC3-40-FB	JSC3-50-FB	JSC3-63-FB	JSC3-80-FB	JSC3-100-FB
Eye bracket (CA)	S1-CA-40	S1-CA-50	S1-CA-63	S1-CA-80	S1-CA-100
Clevis bracket (CB) *2	S1-CB-40	S1-CB-50	S1-CB-63	S1-CB-80	S1-CB-100

*1: The foot mounting bracket is provided as 2 pcs./set.
*2: A pin and a snap ring are attached.
*3: All mounting brackets have mounting bolts attached.

LCM
LCR
LCG
LCW
LCX
STM
STG
STS/STL
STR2
UCA2
ULK*
JSK/M2
JSG
JSC3/JSC4
USSD
UFCD
USC
UB
JSB3
LMB
LML
HCM
HCA
LBC
CAC4
UCAC2
CAC-N
UCAC-N
RCS2
RCC2
PCC
SHC
MCP
GLC
MFC
BBS
RRC
GRC
RV3*
NHS
HRL
LN
Hand
Chuk
MecHnd/Chuk
ShkAbs
FJ
FK
SpdContr
Ending

How to order (ø125 to 180)

Without switch (without magnet for switch)

JSC4-N - LB - 125 ( ) B - 50 ——— S I

With switch (built-in magnet for switch)

JSC4-LN - LB - 125 ( ) B - 50 - T0H - R - S I

Ⓐ Mounting *1

Ⓑ Bore size

Ⓒ Port thread

Ⓓ Cushion

Ⓔ Stroke

Ⓕ Switch model No.
* indicates the lead wire length.

Ⓖ Switch quantity *3

Ⓗ Option

Ⓘ Accessory *5

Code	Description
Ⓐ Mounting	
LB	Axial foot
FA	Rod side flange
FB	Head side flange
CA	Eye bracket
CB	Clevis bracket (pin and snap ring attached)
TC	Intermediate trunnion
TA	Rod side trunnion
TB	Head side trunnion

Ⓑ Bore size (mm)	
125	ø125
140	ø140
160	ø160
180	ø180

Ⓒ Port thread	
Blank	Rc thread
N	NPT thread (made-to-order product)
G	G thread (made-to-order product)

Ⓓ Cushion	
B	Both sides cushioned
R	Rod side cushioned
H	Head side cushioned
N	Without cushion

Ⓔ Stroke (mm)

Bore size	Stroke	Available stroke	Custom stroke
ø125	1 to 800	2000	In 1 mm increments
ø140	1 to 800	2000	
ø160	1 to 800	2000	
ø180	1 to 900	2000	

Ⓕ Switch model No.

Axial lead wire	Radial lead wire	Contact	Voltage AC	Voltage DC	Indicator	Lead wire
T0H*	T0V*	Reed	●	●	1-color LED	2-wire
T5H*	T5V*	Reed	●	●	Without LED	2-wire
T8H*	T8V*	Reed	●	●	1-color LED	2-wire
T1H*	T1V*	Proximity	●		1-color LED	2-wire
T2H*	T2V*	Proximity		●	1-color LED	2-wire
T3H*	T3V*	Proximity		●	1-color LED	3-wire
T3PH*	T3PV*	Proximity		●	1-color LED (PNP output)	3-wire
T2WH*	T2WV*	Proximity		●	2-color LED	2-wire
T2YH*	T2YV*	Proximity		●	2-color LED	2-wire
T3WH*	T3WV*	Proximity		●	2-color LED	3-wire
T3YH*	T3YV*	Proximity		●	2-color LED	3-wire
T2JH*	T2JV*	Proximity		●	1-color LED Off-delay	2-wire
T2YD*	-	Proximity		●	2-color LED for AC magnetic field	2-wire
T2YDT*	-	Proximity		●	2-color LED for AC magnetic field	2-wire

*** Lead wire length**	
Blank	1 m (standard)
3	3 m (option)
5	5 m (option)

Ⓖ Switch quantity	
R	1 on rod side
H	1 on head side
D	2
T	3
4	4

Ⓗ Option

		Max. ambient temp.	instantaneous max. temp
J	Bellows	100°C	200°C
L	Bellows	250°C	400°C
M	Piston rod material (stainless steel)		
Blank	Cushion needle position (standard)		
R	Cushion needle position R		
S	Cushion needle position S		
T	Cushion needle position T		
C2	With cushion section check valve		

*4 Standard: T, R, S

Ⓘ Accessory	
I	Rod eye
Y	Rod clevis (pin and snap ring attached)
B1	Eye bracket
B2	Clevis bracket

⚠ Precautions for model No. selection

*1 : Mounting bracket will be shipped assembled with the product.
*2 : Refer to page 775 for the min. stroke with switch.
*3 : When selecting TA or TB as mounting, the switch quantity is limited to "H" (1 on head side) for TA, and R (1 on rod side) for TB.
*4 : Refer to page 781 for the cushion needle position indication.
*5 : "I" and "Y" cannot be selected together.

[Example of model No.]

JSC4-LN-LB-125B-50-T0H-R-SI

Model: Brake cylinder double acting/no-lubrication

Ⓐ Mounting : Axial foot
Ⓑ Bore size : ø125 mm
Ⓒ Port thread : Rc thread
Ⓓ Cushion : Both sides cushioned
Ⓔ Stroke : 50 mm
Ⓕ Switch model No. : Reed switch T0H, lead wire 1 m
Ⓖ Switch quantity : 1 on rod side
Ⓗ Option : Cushion needle position S
Ⓘ Accessory : Rod eye

LCM
LCR
LCG
LCW
LCX
STM
STG
STS/STL
STR2
UCA2
ULK*
JSK/M2
JSG
JSC3/JSC4
USSD
UFCD
USC
UB
JSB3
LMB
LML
HCM
HCA
LBC
CAC4
UCAC2
CAC-N
UCAC-N
RCS2
RCC2
PCC
SHC
MCP
GLC
MFC
BBS
RRC
GRC
RV3*
NHS
HRL
LN
Hand
Chuk
MecHnd/Chuk
ShkAbs
FJ
FK
SpdContr
Ending

How to order brake unit

JSC4 - 125 - BRAKE-UNIT

125: Bore size (Item Ⓑ on page 780)

How to order T type switch

● Switch body + mounting bracket set

JSC4-LN - T0H - 125

T0H: Switch model No. (Item Ⓕ on page 780)
125: Bore size (Item Ⓑ on page 780)

● Switch body only

SW - T0H

T0H: Switch model No. (Item Ⓕ on page 780)

● Mounting bracket set

JSC4-LN - TS - 125

125: Bore size (Item Ⓑ on page 780)

How to order T2YD type switch

● Switch body + mounting bracket set

JSC4-LN - T2YD - 125

T2YD: Switch model No. (Item Ⓕ on page 780)
125: Bore size (Item Ⓑ on page 780)

● Switch body only

SW - T2YD

T2YD: Switch model No. (Item Ⓕ on page 780)

● Mounting bracket set

JSC4-LN - T - 125

125: Bore size (Item Ⓑ on page 780)

Cushion needle position (needle position from rod direction with the port on the top side)

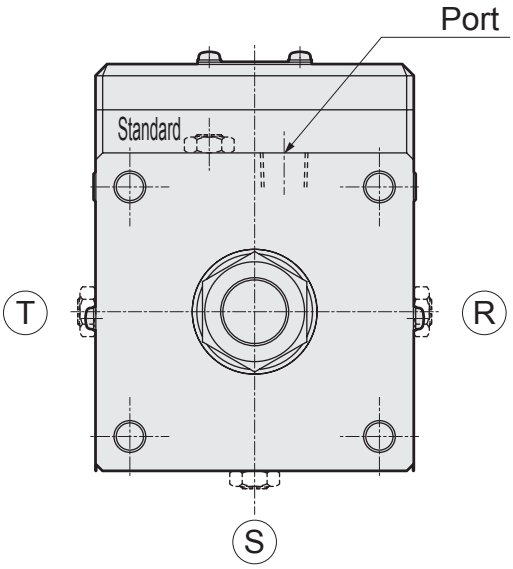

Certified class 2 pressure vessel stroke

Bore size	Stroke
ø160	1948 or more
ø180	1526 or more

LCM
LCR
LCG
LCW
LCX
STM
STG
STS/STL
STR2
UCA2
ULK*
JSK/M2
JSG
JSC3/JSC4
USSD
UFCD
USC
UB
JSB3
LMB
LML
HCM
HCA
LBC
CAC4
UCAC2
CAC-N
UCAC-N
RCS2
RCC2
PCC
SHC
MCP
GLC
MFC
BBS
RRC
GRC
RV3*
NHS
HRL
LN
Hand
Chuk
MecHnd/Chuk
ShkAbs
FJ
FK
SpdContr
Ending

● ø40 to ø100

Material of mounting bracket

Mounting	Material	Remarks
LB	Steel	Paint
FA/FB	Steel	Paint
CA/CB	Cast iron	Paint
TC	Cast iron	Paint

Release bolt size (hexagon socket head cap screw)

Bore size	Size	
	JSC3	JSC3-V
ø40/ø50	M10x8	M10x29
ø63	M12x9	M12x30
ø80	M14x10	M14x31
ø100	M16x12	M16x40

How to release the brake manually

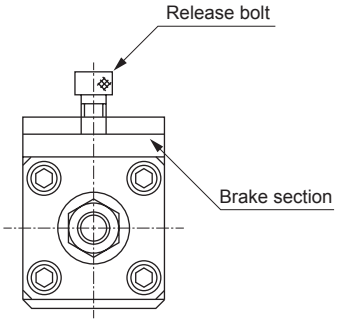

Note: How to release the brake

- The brakes are released by turning the release bolt (attached with product) two or three times to screw it into the female thread (next to brake release port) on top of the brake. (Always remove the release bolt during normal use.)
- To manually release the brake, always use the release bolt attached with the product. Using any other bolt may prevent the brake from functioning properly.

Internal structure and parts list

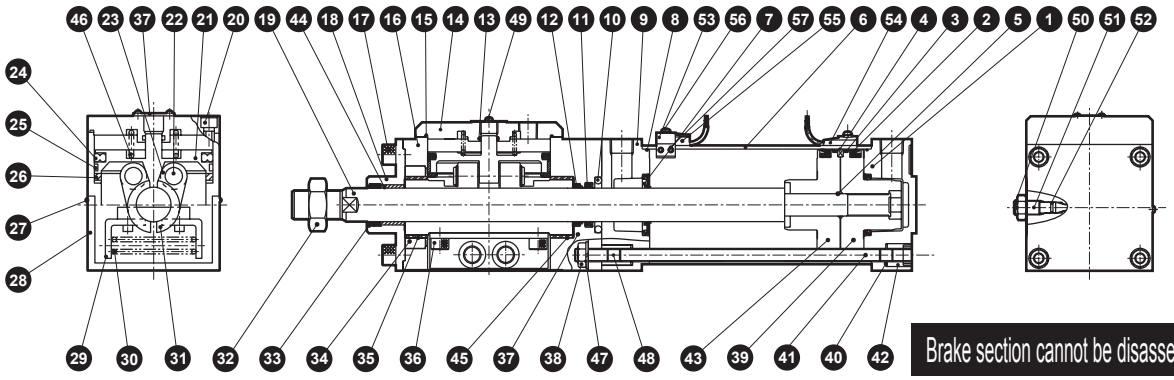

Brake section cannot be disassembled

No.	Part name	Material	Remarks	No.	Part name	Material	Remarks
1	Head cover	Aluminum alloy die-casting	Paint	28	Cover	Steel	Paint
2	Piston packing	Nitrile rubber		29	Spring holder	Steel	Zinc chromate
3	Wear ring	Polyacetal resin		30	Spring	Steel	
4	Magnet	Plastic		31	Brake shoe metal	Cast iron	Nickeling
5	Piston gasket	Nitrile rubber		32	Rod nut	Steel	Zinc chromate
6	Cylinder tube	Aluminum alloy	Hard alumite	33	Dust wiper	Nitrile rubber	
7	Cushion packing	Nitrile rubber, steel		34	DU ring	Steel	Black finish
8	Cylinder gasket	Nitrile rubber		35	Bush	Oil impregnated bearing alloy	
9	Rod cover	Aluminum alloy die-casting	Paint	36	Hexagon socket head cap screw	Alloy steel	Black finish
10	Metal seal	Nitrile rubber		37	Dust cover	Aluminum alloy	Paint
11	Rod packing	Nitrile rubber		38	Hexagon nut	Steel	Black finish
12	Dust wiper	Nitrile rubber		39	Piston H	Aluminum alloy die-casting	
13	Cap gasket A	Nitrile rubber		40	Tie rod	Steel	Zinc chromate
14	Body cap	Cast iron	Nitriding	41	Conical spring washer	Steel	Black finish
15	Cap gasket B	Nitrile rubber		42	Round nut	Steel	Zinc chromate
16	Brake body	Aluminum alloy casting	Alumite	43	Piston R	Aluminum alloy die-casting	
17	Hexagon socket head cap screw	Alloy steel	Black finish	44	Bush B	Oil impregnated bearing alloy	
18	Rod metal	Steel	Manganese phosphate	45	Thrust washer		
19	Piston rod	Steel	Industrial chrome plating	46	Spring	Steel	Paint
20	Hexagon socket head cap screw	Alloy steel	Black finish	47	Toothed washer	Steel	Black finish
21	Brake piston	Cast iron	Manganese phosphate	48	Hexagon socket set screw	Alloy steel	Black finish
22	Parallel pin	Steel		49	Philips pan head machine screw/captive washer	Steel	Zinc chromate
23	Bearing			50	Cushion needle	Copper alloy	Nickeling
24	Piston packing B	Nitrile rubber		51	Needle nut	Copper alloy	Nickeling
25	Wear ring	Polyacetal resin		52	Needle gasket	Nitrile rubber	
26	Cushion rubber	Urethane rubber		With switch			
27	Phillips pan head machine screw	Steel	Zinc chromate	53	Switch mounting base	Aluminum alloy	
				54	Switch holder	Aluminum alloy	
				55	Phillips pan head machine screw	Steel	Zinc chromate
				56	Hexagon socket set screw	Alloy steel	Black finish
				57	Cylinder switch		

Note: Never disassemble the brake section, as the powerful spring installed can be dangerous.

Repair parts list

Bore size (mm)	Kit No.	Repair parts No.
ø40	JSC3-40K	2 3 7 8 10 11 12 33 52
ø50	JSC3-50K	
ø63	JSC3-63K	
ø80	JSC3-80K	
ø100	JSC3-100K	

Note: Specify the kit No. when placing an order.

● ø125 to ø180

Material of mounting bracket

Mounting	Material	Remarks
LB	Steel	Paint
FA	Carbon steel	Parkerizing
CA	Cast iron	Paint
CB	Cast iron	Paint
TC/TA/TB	Cast iron	Paint
FB	Carbon steel	Paint

Release bolt size (hexagon socket head cap screw)

Bore size	Size
ø125	M24 x 16 or higher
ø140	M24 x 20 or higher
ø160	M24 x 20 or higher
ø180	M24 x 24 or higher

How to release the brake manually

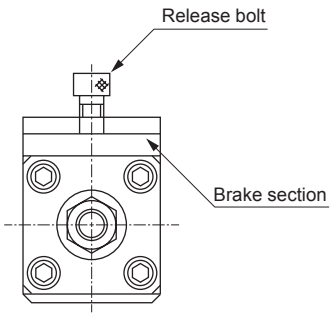

Note: How to release the brake

- The brakes are released by turning the release bolt (attached with product) two or three times to screw it into the female thread (next to brake release port) on top of the brake.
  (Always remove the release bolt during normal use.)
- To manually release the brake, always use the release bolt attached with the product. Using any other bolt may prevent the brake from functioning properly.

Internal structure and parts list

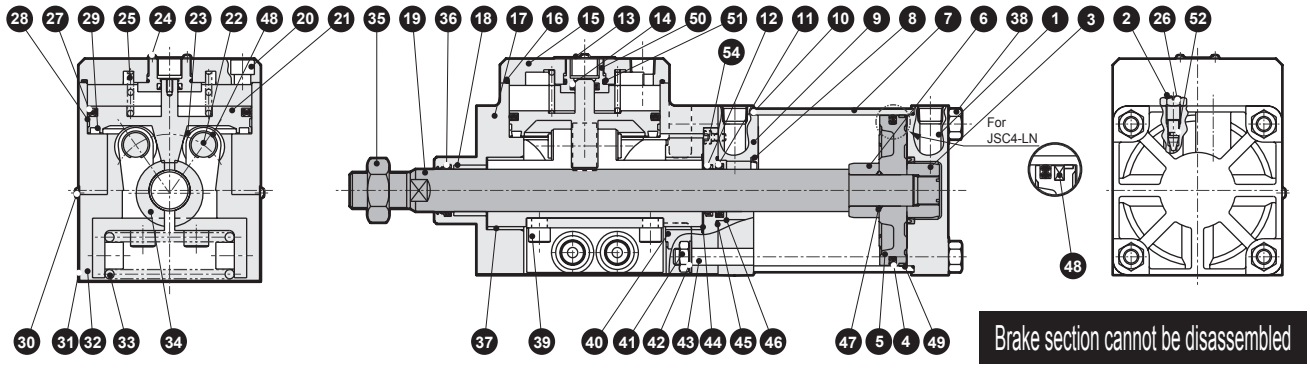

No.	Part name	Material	Remarks	No.	Part name	Material	Remarks
1	Head cover	Aluminum alloy casting	Chromate	28	Wear ring	Polyacetal resin	
2	Cushion needle	Copper alloy		29	Cushion rubber	Urethane rubber	
3	Cushion ring A	Steel	Zinc chromate	30	Phillips pan head machine screw	Steel	Zinc chromate
4	Piston packing	Nitrile rubber		31	Cover	Steel	Paint
5	Piston	Aluminum alloy casting		32	Spring holder	Steel	Manganese phosphate
6	Cushion ring B	Steel	Zinc chromate	33	Spring	Steel	Black finish
7	Cylinder tube	Aluminum alloy	Hard alumite	34	Brake shoe metal	Cast iron	Nickeling
8	Cushion packing	Nitrile rubber/steel		35	Rod nut	Steel	Zinc chromate
9	Rod cover	Aluminum alloy casting	Chromate	36	Dust wiper	Nitrile rubber	
10	Cylinder gasket	Nitrile rubber		37	Bush A	Oiles drymet	
11	Rod packing	Nitrile rubber		38	Hexagon nut	Steel	Zinc chromate
12	Dust wiper	Nitrile rubber		39	Hexagon socket head cap screw	Alloy steel	Black finish
13	Dust cover	Aluminum alloy	Alumite	40	Ring	Steel	Black finish
14	Rod packing	Nitrile rubber		41	Hexagon nut	Steel	Zinc chromate
15	Body cap	Aluminum alloy casting	Black alumite	42	Toothed washer	Steel	Zinc chromate
16	Cap gasket	Nitrile rubber		43	Tie rod	Steel	Zinc chromate
17	Brake body	Aluminum cast iron	Alumite	44	Thrust washer	Steel	
18	Bush B	Oil impregnated bearing alloy		45	Metal gasket	Nitrile rubber	
19	Piston rod	Steel	Industrial chrome plating	46	Rod metal	Cast iron	Zinc chromate
20	Hexagon socket head cap screw	Alloy steel	Black finish	47	Piston gasket	Nitrile rubber	
21	Brake piston	Cast iron	Manganese phosphate	48	Magnet	Rubber	JSC4-LN only
22	Bearing pin	Steel		49	Wear ring	Polyacetal resin	
23	Bearing	-		50	Body cap	Cast iron	Manganese phosphate
24	Phillips pan head screw/captive washer	Steel	Zinc chromate	51	O-ring	Nitrile rubber	
25	Spring	Steel	Paint	52	Needle gasket	Nitrile rubber	
26	Needle nut	Steel	Zinc chromate	53	E type snap ring	Steel	Zinc chromate
27	Piston packing B	Nitrile rubber		54	Hexagon socket head cap screw	Steel	Black finish

Repair parts list

Bore size (mm)	Kit No.	Repair parts No.
ø125	JSC4-N-125K	4 8 10 11 12 36 45 49 52
ø140	JSC4-N-140K	
ø160	JSC4-N-160K	
ø180	JSC4-N-180K	

LCM
LCR
LCG
LCW
LCX
STM
STG
STS/STL
STR2
UCA2
ULK*
JSK/M2
JSG
JSC3/JSC4
USSD
UFCD
USC
UB
JSB3
LMB
LML
HCM
HCA
LBC
CAC4
UCAC2
CAC-N
UCAC-N
RCS2
RCC2
PCC
SHC
MCP
GLC
MFC
BBS
RRC
GRC
RV3*
NHS
HRL
LN
Hand
Chuk
MecHnd/Chuk
ShkAbs
FJ
FK
SpdContr
Ending

Dimensions (ø40 to ø100)

Basic (00)

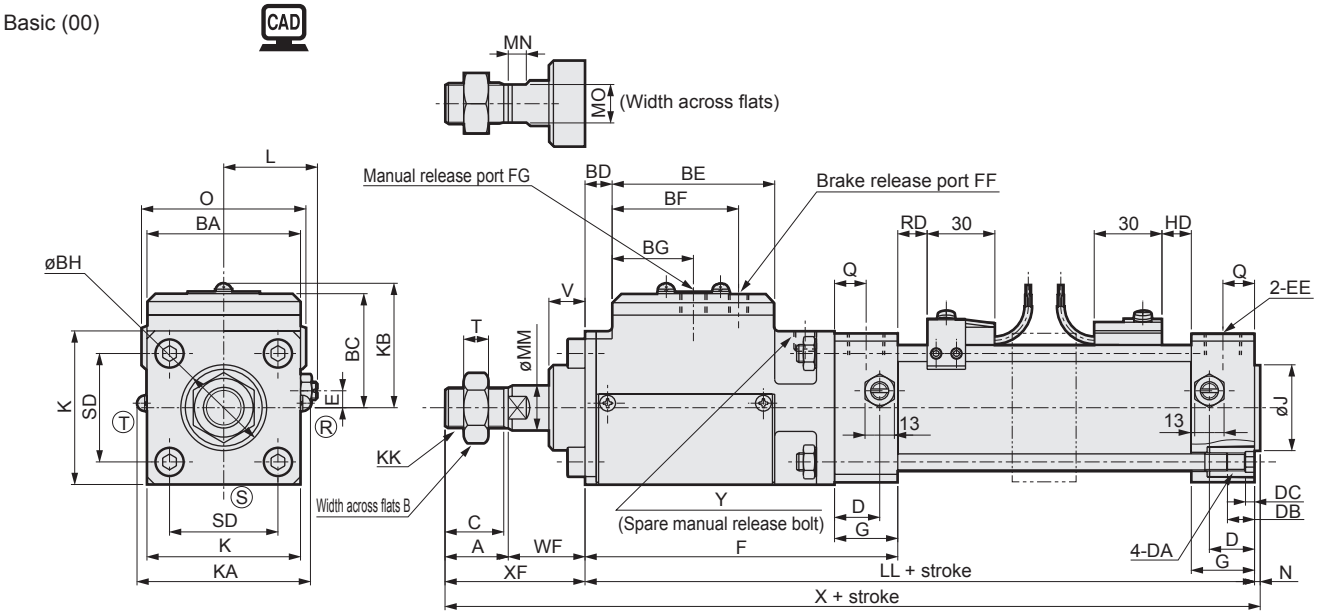

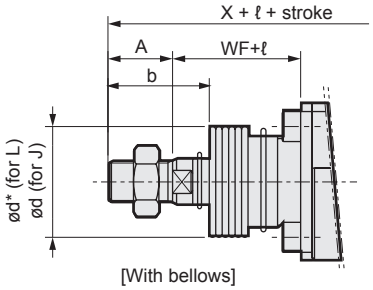

*1 : For the ℓ dimension, round up below the decimal point.
*2 : Ⓡ, Ⓢ and Ⓣ indicate the cushion needle position.
*3 : Manual release bolt is attached.
*4 : For the dimensions of the accessories, refer to pages 806 and 807.
*5 : Non-sag block (2-dashed line) will be added depending on the stroke. Refer to page 794 for details on dimensions.

Code	Basic (00) basic dimensions																					
Bore size (mm)	A	B	BA	BC	BD	BE	BF	BG	BH	C	D	DA	DB	DC	E	EE	F	FF	FG	G	J	K
ø40	22	22	57	46	9	62	51	31	31	20	18	M8	12	4	7.5	Rc1/4	121	Rc1/8	M10	26	31	57
ø50	28	27	68	50.5	12	72	56	36	38	26	20	M8	12	4	0	Rc3/8	138.5	Rc1/8	M10	28	38	68
ø63	28	27	80	54	13	86	70	43	38	26	22	M8	12	4	0	Rc3/8	154	Rc1/4	M12	30	38	80
ø80	36	32	98	66	13	106	80	53	43	34	26	M12	16	5	0	Rc1/2	179.5	Rc1/4	M14	34	43	98
ø100	45	41	118	74	17.5	132	101	66	51	43	28	M12	16	5	0	Rc1/2	220.5	Rc3/8	M16	36	51	118

Code																		With switch				
Bore size (mm)	KA	KB	KK	L	LL	MM	MN	M0	N	Q	SD	T	V	WF	X	XF	Y	O	T0, T5, T2, T3		T1, T2Y, T3Y, T2J, T2YD/T	
																			RD	HD	RD	HD
ø40	66	50.5	M14x1.5	38 to 39.5	188	16	8	14	2	13	40.5	8	15	30	242	52	M10 depth 9	66	11	11	10	10
ø50	77	55	M18x1.5	41.0 to 43.5	211.5	20	8	17	2.5	14	48	11	16	34	276	62	M10 depth 9	73	13	13	12	12
ø63	89	58.5	M18x1.5	47.5 to 50.0	229	20	8	17	3	15	59	11	16	30	290	58	M12 depth 10	85	13	13	12	12
ø80	107	70.5	M22x1.5	56 to 59	261.5	25	11	22	3.5	17	74	13	17.5	43.5	344.5	79.5	M14 depth 11	105	14.5	14.5	13.5	13.5
ø100	127	78.5	M26x1.5	66 to 69	312.5	30	13	27	4	18	90	16	26	48	409.5	93	M16 depth 13	121	18.5	18.5	17.5	17.5

Code							With bellows						ℓ							
Bore size (mm)	T8		T2W, T3W		HO, HOY		A	WF	FF	b	d	d*	50 or less	51 to 100	101 to 150	151 to 200	201 to 300	301 to 400	401 to 500	501 or more
	RD	HD	RD	HD	RD	HD														
ø40	5	5	13	13	4	4	22	30	22	41	40	40	25.5	41.5	58.5	75.5	108.5	141.5	174.5	(Stroke/3.0) + 8
ø50	7	7	15	15	6	6	28	34	27	47	47	48	22	36	49	63	90	119	146	(Stroke/3.6) + 7.5
ø63	7	7	15	15	6	6	28	30	22	45	47	48	22	36	49	63	90	119	146	(Stroke/3.6) + 7.5
ø80	8.5	8.5	16.5	16.5	7.5	7.5	36	43.5	30.5	58.5	53	55	14	26	38	49	72	96	119	(Stroke/4.3) + 2.5
ø100	12.5	12.5	20.5	20.5	11.5	11.5	45	48	35.5	69.5	61	65	20	32	42	53	76	98	120	(Stroke/4.5) + 9

LCM
LCR
LCG
LCW
LCX
STM
STG
STS/STL
STR2
UCA2
ULK*
JSK/M2
JSG
JSC3/JSC4
USSD
UFCD
USC
UB
JSB3
LMB
LML
HCM
HCA
LBC
CAC4
UCAC2
CAC-N
UCAC-N
RCS2
RCC2
PCC
SHC
MCP
GLC
MFC
BBS
RRC
GRC
RV3*
NHS
HRL
LN
Hand
Chuk
MecHnd/Chuk
ShkAbs
FJ
FK
SpdContr
Ending

Dimensions (ø40 to ø100)

CAD

● Axial foot (LB)

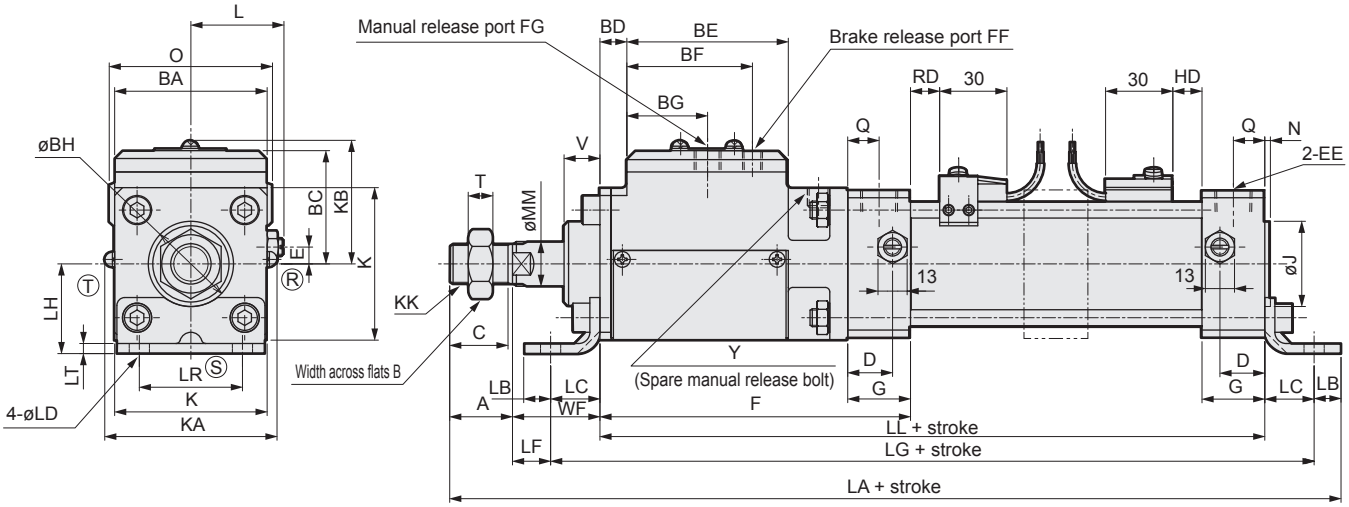

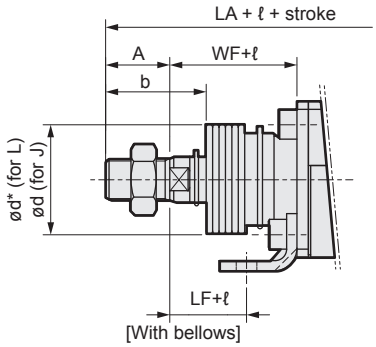

*1 : For the ℓ dimension, round up below the decimal point.
*2 : Ⓡ, Ⓢ and Ⓣ indicate the cushion needle position.
*3 : Manual release bolt is attached.
*4 : For the dimensions of the accessories, refer to pages 806 and 807.
*5 : Non-sag block (2-dashed line) will be added depending on the stroke. Refer to page 794 for details on dimensions.

Code	Axial foot (LB) basic dimensions																				
Bore size (mm)	A	B	BA	BC	BD	BE	BF	BG	BH	C	D	E	EE	F	FG	FF	G	J	K	KA	KB
ø40	22	22	57	46	9	62	51	31	31	20	18	7.5	Rc1/4	121	M10	Rc1/8	26	31	57	66	50.5
ø50	28	27	68	50.5	12	72	56	36	38	26	20	0	Rc3/8	138.5	M10	Rc1/8	28	38	68	77	55
ø63	28	27	80	54	13	86	70	43	38	26	22	0	Rc3/8	154	M12	Rc1/4	30	38	80	89	58.5
ø80	36	32	98	66	13	106	80	53	43	34	26	0	Rc1/2	179.5	M14	Rc1/4	34	43	98	107	70.5
ø100	45	41	118	74	17.5	132	101	66	51	43	28	0	Rc1/2	220.5	M16	Rc3/8	36	51	118	127	78.5

Code											Mounting dimensions									With switch			
Bore size (mm)	KK	L	LL	MM	N	Q	T	V	WF	Y	LA	LB	LC	LD	LF	LG	LH	LR	LT	O	T0, T5, T2, T3		T1, T2Y, T3Y, T2J, T2YD/T	
																					RD	HD	RD	HD
ø40	M14x1.5	38 to 39.5	188	16	2	13	8	15	30	M10 depth 9	269.5	10	19.5	9	10.5	227	40	40	3.2	66	11	11	10	10
ø50	M18x1.5	41.0 to 43.5	211.5	20	2.5	14	11	16	34	M10 depth 9	307.5	12	22	9	12	255.5	40	46	4.5	73	13	13	12	12
ø63	M18x1.5	47.5 to 50.0	229	20	3	15	11	16	30	M12 depth 10	329	12	30	11	0	289	50	60	4.5	85	13	13	12	12
ø80	M22x1.5	56 to 59	261.5	25	3.5	17	13	17.5	43.5	M14 depth 11	392	14	37	14	6.5	335.5	60	74	6.0	105	14.5	14.5	13.5	13.5
ø100	M26x1.5	66 to 69	312.5	30	4	18	16	26	48	M16 depth 13	457.5	21	31	14	17	374.5	67	80	6.0	121	18.5	18.5	17.5	17.5

Code							With bellows						ℓ							
Bore size (mm)	T8		T2W, T3W		HO, HOY		A	WF	FF	b	d	d*	50 or less	51 to 100	101 to 150	151 to 200	201 to 300	301 to 400	401 to 500	501 or more
	RD	HD	RD	HD	RD	HD														
ø40	5	5	13	13	4	4	22	30	22	41	40	40	25.5	41.5	58.5	75.5	108.5	141.5	174.5	(Stroke/3.0) + 8
ø50	7	7	15	15	6	6	28	34	27	47	47	48	22	36	49	63	90	119	146	(Stroke/3.6) + 7.5
ø63	7	7	15	15	6	6	28	30	22	45	47	48	22	36	49	63	90	119	146	(Stroke/3.6) + 7.5
ø80	8.5	8.5	16.5	16.5	7.5	7.5	36	43.5	30.5	58.5	53	55	14	26	38	49	72	96	119	(Stroke/4.3) + 2.5
ø100	12.5	12.5	20.5	20.5	11.5	11.5	45	48	35.5	69.5	61	65	20	32	42	53	76	98	120	(Stroke/4.5) + 9

LCM
LCR
LCG
LCW
LCX
STM
STG
STS/STL
STR2
UCA2
ULK*
JSK/M2
JSG
JSC3/JSC4
USSD
UFCD
USC
UB
JSB3
LMB
LML
HCM
HCA
LBC
CAC4
UCAC2
CAC-N
UCAC-N
RCS2
RCC2
PCC
SHC
MCP
GLC
MFC
BBS
RRC
GRC
RV3*
NHS
HRL
LN
Hand
Chuk
MecHnd/Chuk
ShkAbs
FJ
FK
SpdContr
Ending

Dimensions (ø40 to ø100)

CAD

● Rod side flange (FA)

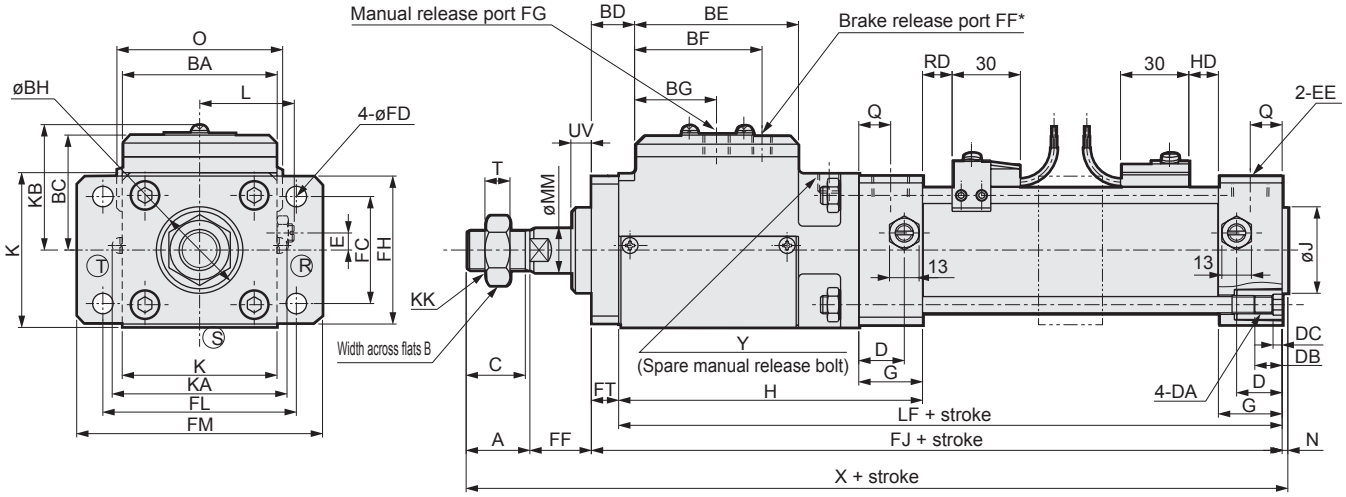

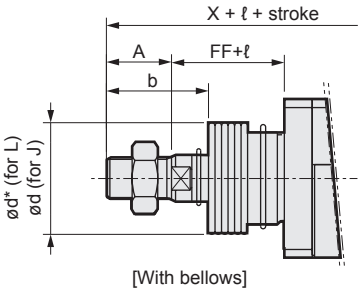

[With bellows]

*1 : For the ℓ dimension, round up below the decimal point.
*2 : Ⓡ, Ⓢ and Ⓣ indicate the cushion needle position.
*3 : Reassembly to the head side flange is not possible because the rod metal is not fixed.
*4 : Manual release bolt is attached.
*5 : For the dimensions of the accessories, refer to pages 806 and 807.
*6 : Non-sag block (2-dashed line) will be added depending on the stroke. Refer to page 794 for details on dimensions.

Code	Rod side flange (FA) basic dimensions																						
Bore size (mm)	A	B	BA	BC	BD	BE	BF	BG	BH	C	D	DA	DC	DB	E	EE	FF*	FG	G	H	J	K	KA
ø40	22	22	57	46	17	62	51	31	31	20	18	M8	4	12	7.5	Rc1/4	Rc1/8	M10	26	117	31	57	66
ø50	28	27	68	50.5	19	72	56	36	38	26	20	M8	4	12	0	Rc3/8	Rc1/8	M10	28	134	38	68	77
ø63	28	27	80	54	21	86	70	43	38	26	22	M8	4	12	0	Rc3/8	Rc1/4	M12	30	146	38	80	89
ø80	36	32	98	66	26	106	80	53	43	34	26	M12	5	16	0	Rc1/2	Rc1/4	M14	34	173.5	43	98	107
ø100	45	41	118	74	30	132	101	66	51	43	28	M12	5	16	0	Rc1/2	Rc3/8	M16	36	214.5	51	118	127

Code												Mounting dimensions								With switch				
Bore size (mm)	KB	KK	L	LF	MM	N	Q	T	UV	X	Y	FC	FD	FF	FH	FJ	FL	FM	FT	O	T0, T5, T2, T3 RD	T0, T5, T2, T3 HD	T1, T2Y, T3Y, T2J, T2YD/T RD	T1, T2Y, T3Y, T2J, T2YD/T HD
ø40	50.5	M14x1.5	38 to 39.5	184	16	2	13	8	7	242	M10 depth 9	40	9	22	57	196	80	100	12	66	11	11	10	10
ø50	55	M18x1.5	41.0 to 43.5	207	20	2.5	14	11	8.5	276	M10 depth 9	47	9	27	65	219	85	108	12	73	13	13	12	12
ø63	58.5	M18x1.5	47.5 to 50.0	221	20	3	15	11	8	290	M12 depth 10	60	11	22	80	237	106	130	16	85	13	13	12	12
ø80	70.5	M22x1.5	56 to 59	255.5	25	3.5	17	13	4.5	344.5	M14 depth 11	74	14	30.5	98	274.5	125	153	19	105	14.5	14.5	13.5	13.5
ø100	78.5	M26x1.5	66 to 69	306	30	4	18	16	13	409.5	M16 depth 13	88	14	35	118	325	144	180	19	121	18.5	18.5	17.5	17.5

Code							With bellows						ℓ							
Bore size (mm)	T8 RD	T8 HD	T2W, T3W RD	T2W, T3W HD	HO, HOY RD	HO, HOY HD	A	WF	FF	b	d	d*	50 or less	51 to 100	101 to 150	151 to 200	201 to 300	301 to 400	401 to 500	501 or more
ø40	5	5	13	13	4	4	22	30	22	41	40	40	25.5	41.5	58.5	75.5	108.5	141.5	174.5	(Stroke/3.0) + 8
ø50	7	7	15	15	6	6	28	34	27	47	47	48	22	36	49	63	90	119	146	(Stroke/3.6) + 7.5
ø63	7	7	15	15	6	6	28	30	22	45	47	48	22	36	49	63	90	119	146	(Stroke/3.6) + 7.5
ø80	8.5	8.5	16.5	16.5	7.5	7.5	36	43.5	30.5	58.5	53	55	14	26	38	49	72	96	119	(Stroke/4.3) + 2.5
ø100	12.5	12.5	20.5	20.5	11.5	11.5	45	48	35	69.5	61	65	20	32	42	53	76	98	120	(Stroke/4.5) + 9

Dimensions (ø40 to ø100)

● Head side flange (FB)

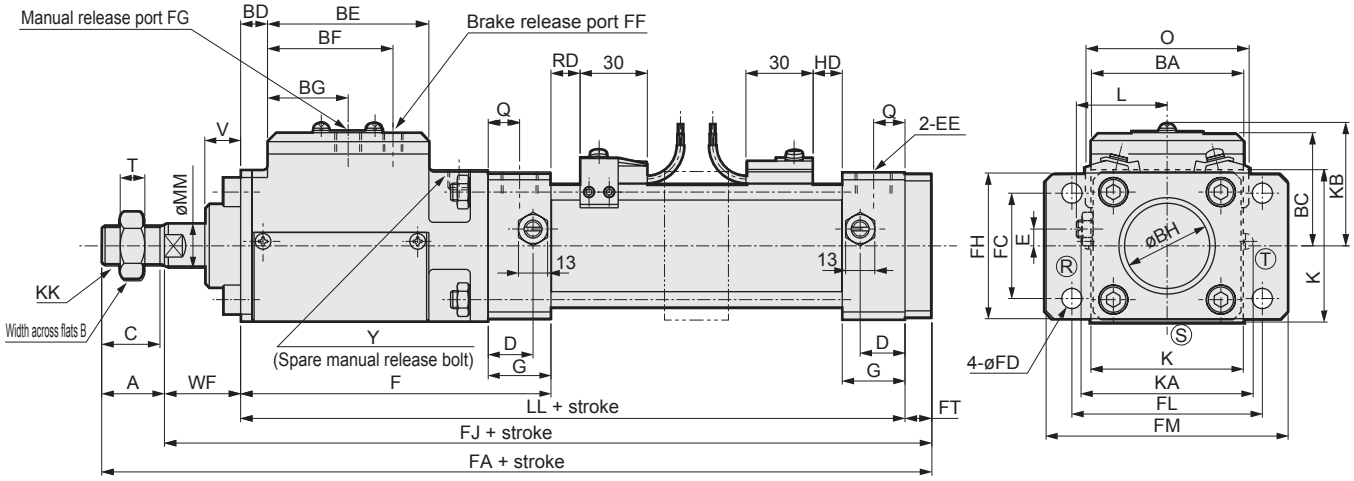

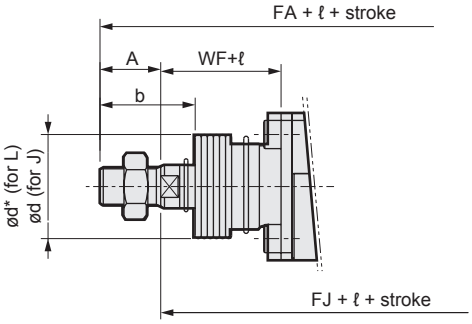

[With bellows]

*1 : For the ℓ dimension, round up below the decimal point.
*2 : Ⓡ, Ⓢ and Ⓣ indicate the cushion needle position.
*3 : Reassembly to the rod side flange is not possible because the piston rod protruding length (from the flange end), rod metal and flange mounting bolt are different.
*4 : Manual release bolt is attached.
*5 : For the dimensions of the accessories, refer to pages 806 and 807.
*6 : Non-sag block (2-dashed line) will be added depending on the stroke. Refer to page 794 for details on dimensions.

Code / Bore size (mm)	Head side flange (FB) basic dimensions																			
	A	B	BA	BC	BD	BE	BF	BG	BH	C	D	E	EE	F	FG	FF	G	K	KA	KB
ø40	22	22	57	46	9	62	51	31	31	20	18	7.5	Rc1/4	121	M10	Rc1/8	26	57	66	50.5
ø50	28	27	68	50.5	12	72	56	36	38	26	20	0	Rc3/8	138.5	M10	Rc1/8	28	68	77	55
ø63	28	27	80	54	13	86	70	43	38	26	22	0	Rc3/8	154	M12	Rc1/4	30	80	89	58.5
ø80	36	32	98	66	13	106	80	53	43	34	26	0	Rc1/2	179.5	M14	Rc1/4	34	98	107	70.5
ø100	45	41	118	74	17.5	132	101	66	51	43	28	0	Rc1/2	220.5	M16	Rc3/8	36	118	127	78.5

Code / Bore size (mm)										Mounting dimensions								With switch				
	KK	L	LL	MM	Q	T	V	WF	Y	FA	FC	FD	FH	FJ	FL	FM	FT	O	T0, T5, T2, T3		T1, T2Y, T3Y, T2J, T2YD/T	
																			RD	HD	RD	HD
ø40	M14x1.5	38 to 39.5	188	16	13	8	15	30	M10 depth 9	252	40	9	57	230	80	100	12	66	11	11	10	10
ø50	M18x1.5	41.0 to 43.5	211.5	20	14	11	16	34	M10 depth 9	285.5	47	9	65	257.5	85	108	12	73	13	13	12	12
ø63	M18x1.5	47.5 to 50.0	229	20	15	11	16	30	M12 depth 10	303	60	11	80	275	106	130	16	85	13	13	12	12
ø80	M22x1.5	56 to 59	261.5	25	17	13	17.5	43.5	M14 depth 11	360	74	14	98	324	125	153	19	105	14.5	14.5	13.5	13.5
ø100	M26x1.5	66 to 69	312.5	30	18	16	26	48	M16 depth 13	424.5	88	14	118	379.5	144	180	19	121	18.5	18.5	17.5	17.5

Code / Bore size (mm)							With bellows						ℓ							
	T8		T2W, T3W		HO, HOY		A	WF	FF	b	d	d*	50 or less	51 to 100	101 to 150	151 to 200	201 to 300	301 to 400	401 to 500	501 or more
	RD	HD	RD	HD	RD	HD														
ø40	5	5	13	13	4	4	22	30	22	41	40	40	25.5	41.5	58.5	75.5	108.5	141.5	174.5	(Stroke/3.0) + 8
ø50	7	7	15	15	6	6	28	34	27	47	47	48	22	36	49	63	90	119	146	(Stroke/3.6) + 7.5
ø63	7	7	15	15	6	6	28	30	22	45	47	48	22	36	49	63	90	119	146	(Stroke/3.6) + 7.5
ø80	8.5	8.5	16.5	16.5	7.5	7.5	36	43.5	30.5	58.5	53	55	14	26	38	49	72	96	119	(Stroke/4.3) + 2.5
ø100	12.5	12.5	20.5	20.5	11.5	11.5	45	48	35.5	69.5	61	65	20	32	42	53	76	98	120	(Stroke/4.5) + 9

LCM
LCR
LCG
LCW
LCX
STM
STG
STS/STL
STR2
UCA2
ULK*
JSK/M2
JSG
JSC3/JSC4
USSD
UFCD
USC
UB
JSB3
LMB
LML
HCM
HCA
LBC
CAC4
UCAC2
CAC-N
UCAC-N
RCS2
RCC2
PCC
SHC
MCP
GLC
MFC
BBS
RRC
GRC
RV3*
NHS
HRL
LN
Hand
Chuk
MecHnd/Chuk
ShkAbs
FJ
FK
SpdContr
Ending

Dimensions (ø40 to ø100)

● Head side special flange (FC)

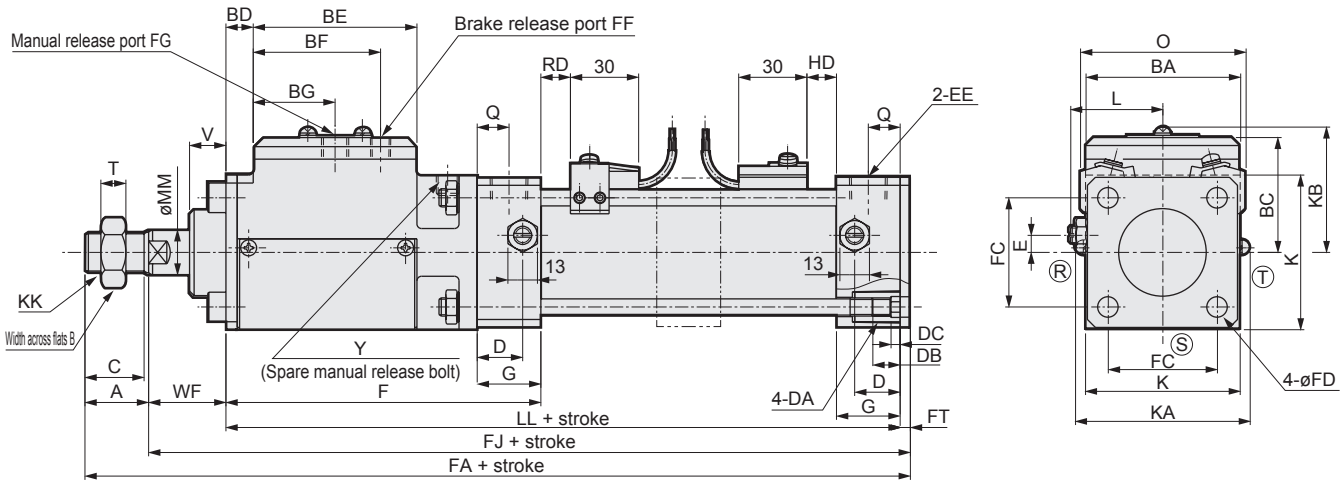

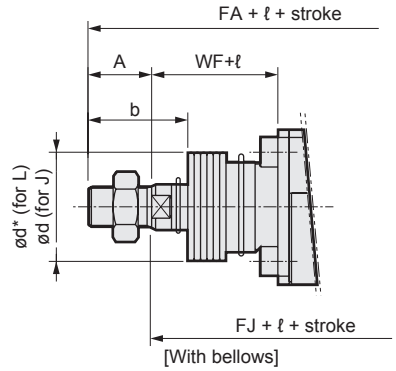

*1 : For the ℓ dimension, round up below the decimal point.
*2 : Ⓡ, Ⓢ and Ⓣ indicate the cushion needle position.
*3 : Manual release bolt is attached.
*4 : For the dimensions of the accessories, refer to pages 806 and 807.
*5 : Non-sag block (2-dashed line) will be added depending on the stroke. Refer to page 794 for details on dimensions.

Code	Head side flange (FC) basic dimensions																				
Bore size (mm)	A	B	BA	BC	BD	BE	BF	BG	C	D	DA	DB	DC	EE	F	FG	FF	G	K	KK	KA
ø40	22	22	57	46	9	62	51	31	20	18	M8	12	4	Rc1/4	121	M10	Rc1/8	26	57	M14x1.5	66
ø50	28	27	68	50.5	12	72	56	36	26	20	M8	12	4	Rc3/8	138.5	M10	Rc1/8	28	68	M18x1.5	77
ø63	28	27	80	54	13	86	70	43	26	22	M8	12	4	Rc3/8	154	M12	Rc1/4	30	80	M18x1.5	89
ø80	36	32	98	66	13	106	80	53	34	26	M12	16	5	Rc1/2	179.5	M14	Rc1/4	34	98	M22x1.5	107
ø100	45	41	118	74	17.5	132	101	66	43	28	M12	16	5	Rc1/2	220.5	M16	Rc3/8	36	118	M26x1.5	127

Code										Mounting dimensions					With switch				
Bore size (mm)	KB	L	LL	MM	Q	T	V	WF	Y	FA	FC	FD	FJ	FT	O	T0, T5, T2, T3		T1, T2Y, T3Y, T2J, T2YD/T	
																RD	HD	RD	HD
ø40	50.5	38 to 39.5	188	16	13	8	15	30	M10 depth 9	244.5	40.5	9	222.5	4.5	66	11	11	10	10
ø50	55	41.0 to 43.5	211.5	20	14	11	16	34	M10 depth 9	278	48	9	250	4.5	73	13	13	12	12
ø63	58.5	47.5 to 50.0	229	20	15	11	16	30	M12 depth 10	291.5	59	9	263.5	4.5	85	13	13	12	12
ø80	70.5	56 to 59	261.5	25	17	13	17.5	43.5	M14 depth 11	347	74	14	311	6	105	14.5	14.5	13.5	13.5
ø100	78.5	66 to 69	312.5	30	18	16	26	48	M16 depth 13	411.5	90	14	366.5	6	121	18.5	18.5	17.5	17.5

Code							With bellows						ℓ							
Bore size (mm)	T8		T2W, T3W		HO, HOY		A	WF	FF	b	d	d*	50 or less	51 to 100	101 to 150	151 to 200	201 to 300	301 to 400	401 to 500	501 or more
	RD	HD	RD	HD	RD	HD														
ø40	5	5	13	13	4	4	22	30	22	41	40	40	25.5	41.5	58.5	75.5	108.5	141.5	174.5	(Stroke/3.0) + 8
ø50	7	7	15	15	6	6	28	34	27	47	47	48	22	36	49	63	90	119	146	(Stroke/3.6) + 7.5
ø63	7	7	15	15	6	6	28	30	22	45	47	48	22	36	49	63	90	119	146	(Stroke/3.6) + 7.5
ø80	8.5	8.5	16.5	16.5	7.5	7.5	36	43.5	30.5	58.5	53	55	14	26	38	49	72	96	119	(Stroke/4.3) + 2.5
ø100	12.5	12.5	20.5	20.5	11.5	11.5	45	48	35.5	69.5	61	65	20	32	42	53	76	98	120	(Stroke/4.5) + 9

Dimensions (ø40 to ø100)

● Eye bracket (CA)

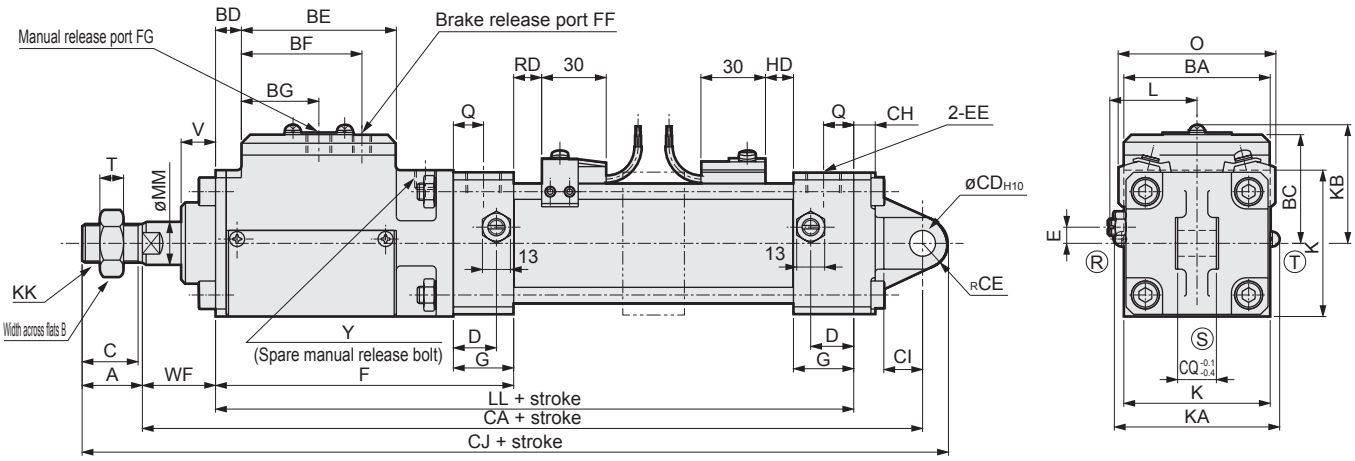

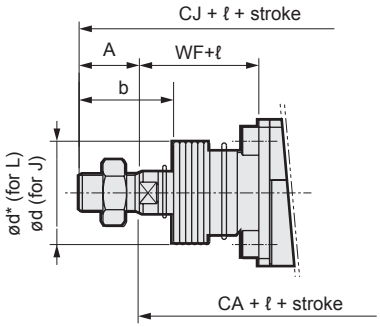

[With bellows]

*1 : For the ℓ dimension, round up below the decimal point.
*2 : Ⓡ, Ⓢ and Ⓣ indicate the cushion needle position.
*3 : For the dimensions of the accessories, refer to pages 806 and 807.
*4 : Non-sag block (2-dashed line) will be added depending on the stroke. Refer to page 794 for details on dimensions.

Code	Eye bracket (CA) basic dimensions																		
Bore size (mm)	A	B	BA	BC	BD	BE	BF	BG	C	D	E	EE	F	FF	FG	G	K	KK	KA
ø40	22	22	57	46	9	62	51	31	20	18	7.5	Rc1/4	121	Rc1/8	M10	26	57	M14x1.5	66
ø50	28	27	68	50.5	12	72	56	36	26	20	0	Rc3/8	138.5	Rc1/8	M10	28	68	M18x1.5	77
ø63	28	27	80	54	13	86	70	43	26	22	0	Rc3/8	154	Rc1/4	M12	30	80	M18x1.5	89
ø80	36	32	98	66	13	106	80	53	34	26	0	Rc1/2	179.5	Rc1/4	M14	34	98	M22x1.5	107
ø100	45	41	118	74	17.5	132	101	66	43	28	0	Rc1/2	220.5	Rc3/8	M16	36	118	M26x1.5	127

Code										Mounting dimensions							With switch				
Bore size (mm)	KB	L	LL	MM	Q	T	V	WF	Y	CA	CD	CE	CH	CI	CJ	CQ	O	T0, T5, T2, T3		T1, T2Y, T3Y, T2J, T2YD/T	
																		RD	HD	RD	HD
ø40	50.5	38 to 39.5	188	16	13	8	15	30	M10 depth 9	250	12	12	10	18	284	18	66	11	11	10	10
ø50	55	41.0 to 43.5	211.5	20	14	11	16	34	M10 depth 9	277.5	12	12	10	18	317.5	18	73	13	13	12	12
ø63	58.5	47.5 to 50.0	229	20	15	11	16	30	M12 depth 10	296	14	16	10	24	340	20	85	13	13	12	12
ø80	70.5	56 to 59	261.5	25	17	13	17.5	43.5	M14 depth 11	357	20	20	14	30	413	28	105	14.5	14.5	13.5	13.5
ø100	78.5	66 to 69	312.5	30	18	16	26	48	M16 depth 13	412.5	20	20	16	30	477.5	28	121	18.5	18.5	17.5	17.5

Code							With bellows						ℓ							
Bore size (mm)	T8		T2W, T3W		HO, HOY		A	WF	FF	b	d	d*	50 or less	51 to 100	101 to 150	151 to 200	201 to 300	301 to 400	401 to 500	501 or more
	RD	HD	RD	HD	RD	HD														
ø40	5	5	13	13	4	4	22	30	22	41	40	40	25.5	41.5	58.5	75.5	108.5	141.5	174.5	(Stroke/3.0) + 8
ø50	7	7	15	15	6	6	28	34	27	47	47	48	22	36	49	63	90	119	146	(Stroke/3.6) + 7.5
ø63	7	7	15	15	6	6	28	30	22	45	47	48	22	36	49	63	90	119	146	(Stroke/3.6) + 7.5
ø80	8.5	8.5	16.5	16.5	7.5	7.5	36	43.5	30.5	58.5	53	55	14	26	38	49	72	96	119	(Stroke/4.3) + 2.5
ø100	12.5	12.5	20.5	20.5	11.5	11.5	45	48	35.5	69.5	61	65	20	32	42	53	76	98	120	(Stroke/4.5) + 9

LCM
LCR
LCG
LCW
LCX
STM
STG
STS/STL
STR2
UCA2
ULK*
JSK/M2
JSG
JSC3/JSC4
USSD
UFCD
USC
UB
JSB3
LMB
LML
HCM
HCA
LBC
CAC4
UCAC2
CAC-N
UCAC-N
RCS2
RCC2
PCC
SHC
MCP
GLC
MFC
BBS
RRC
GRC
RV3*
NHS
HRL
LN
Hand
Chuk
MecHnd/Chuk
ShkAbs
FJ
FK
SpdContr
Ending

Dimensions (ø40 to ø100)

● Clevis bracket (CB)

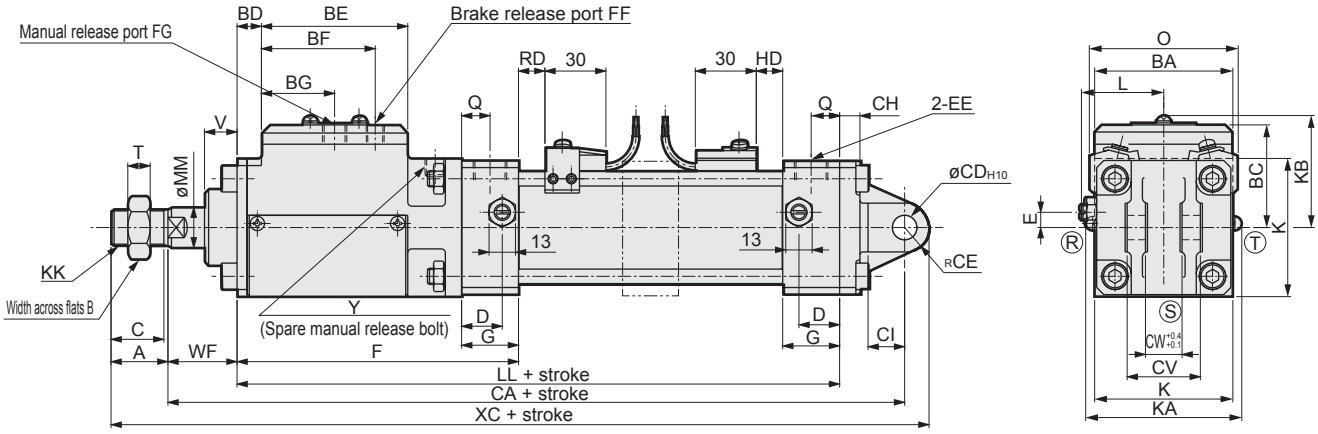

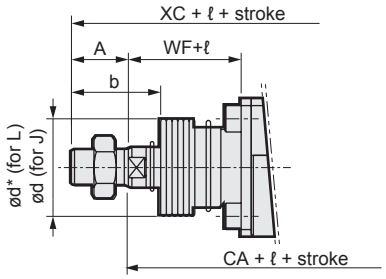

[With bellows]

*1 : For the ℓ dimension, round up below the decimal point.
*2 : Ⓡ, Ⓢ and Ⓣ indicate the cushion needle position.
*3 : A pin and a snap ring are attached.
*4 : For the dimensions of the accessories, refer to pages 806 and 807.
*5 : Non-sag block (2-dashed line) will be added depending on the stroke. Refer to page 794 for details on dimensions.

Code	Clevis bracket (CB) basic dimensions																	
Bore size (mm)	A	B	BA	BC	BD	BE	BF	BG	C	D	EE	F	FF	FG	G	K	KK	KA
ø40	22	22	57	46	9	62	51	31	20	18	Rc1/4	121	Rc1/8	M10	26	57	M14x1.5	66
ø50	28	27	68	50.5	12	72	56	36	26	20	Rc3/8	138.5	Rc1/8	M10	28	68	M18x1.5	77
ø63	28	27	80	54	13	86	70	43	26	22	Rc3/8	154	Rc1/4	M12	30	80	M18x1.5	89
ø80	36	32	98	66	13	106	80	53	34	26	Rc1/2	179.5	Rc1/4	M14	34	98	M22x1.5	107
ø100	45	41	118	74	17.5	132	101	66	43	28	Rc1/2	220.5	Rc3/8	M16	36	118	M26x1.5	127

Code											Mounting dimensions							With switch				
Bore size (mm)	KB	L	LL	MM	Q	T	V	WF	XC	Y	CA	CD	CE	CH	CI	CV	CW	O	T0, T5, T2, T3		T1, T2Y, T3Y, T2J, T2YD/T	
																			RD	HD	RD	HD
ø40	50.5	38 to 39.5	188	16	13	8	15	30	284	M10 depth 9	250	12	12	10	18	36	18	66	11	11	10	10
ø50	55	41.0 to 43.5	211.5	20	14	11	16	34	317.5	M10 depth 9	277.5	12	12	10	18	36	18	73	13	13	12	12
ø63	58.5	47.5 to 50.0	229	20	15	11	16	30	340	M12 depth 10	296	14	16	10	24	40	20	85	13	13	12	12
ø80	70.5	56 to 59	261.5	25	17	13	17.5	43.5	413	M14 depth 11	357	20	20	14	30	56	28	105	14.5	14.5	13.5	13.5
ø100	78.5	66 to 69	312.5	30	18	16	26	48	477.5	M16 depth 13	412.5	20	20	16	30	56	28	121	18.5	18.5	17.5	17.5

Code							With bellows						ℓ							
Bore size (mm)	T8		T2W, T3W		HO, HOY		A	WF	FF	b	d	d*	50 or less	51 to 100	101 to 150	151 to 200	201 to 300	301 to 400	401 to 500	501 or more
	RD	HD	RD	HD	RD	HD														
ø40	5	5	13	13	4	4	22	30	22	41	40	40	25.5	41.5	58.5	75.5	108.5	141.5	174.5	(Stroke/3.0) + 8
ø50	7	7	15	15	6	6	28	34	27	47	47	48	22	36	49	63	90	119	146	(Stroke/3.6) + 7.5
ø63	7	7	15	15	6	6	28	30	22	45	47	48	22	36	49	63	90	119	146	(Stroke/3.6) + 7.5
ø80	8.5	8.5	16.5	16.5	7.5	7.5	36	43.5	30.5	58.5	53	55	14	26	38	49	72	96	119	(Stroke/4.3) + 2.5
ø100	12.5	12.5	20.5	20.5	11.5	11.5	45	48	35.5	69.5	61	65	20	32	42	53	76	98	120	(Stroke/4.5) + 9

Dimensions (ø40 to ø100)

● Rod side trunnion (TA)

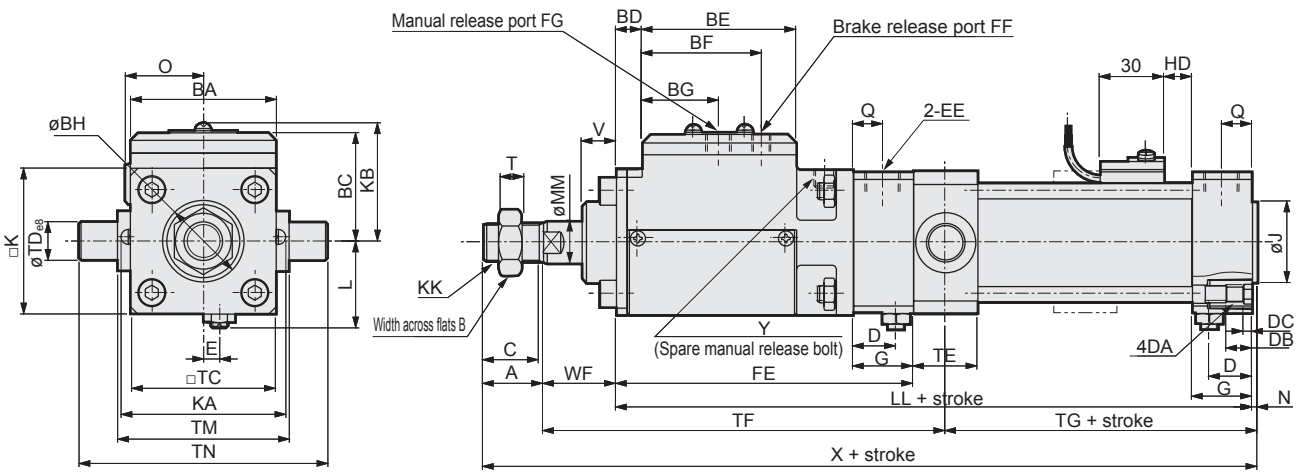

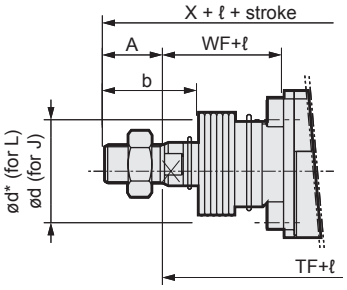

[With bellows]

*1 : For the ℓ dimension, round up below the decimal point.
*2 : Position cannot be detected at rod side stroke end.
*3 : The position of the cushion needle cannot be changed.
*4 : For the dimensions of the accessories, refer to pages 806 and 807.
*5 : Non-sag block (2-dashed line) will be added depending on the stroke. Refer to page 794 for details on dimensions.

Code	Rod side trunnion (TA) basic dimensions																					
Bore size (mm)	A	B	BA	BC	BD	BE	BF	BG	BH	C	D	DA	DB	DC	E	EE	FE	FF	FG	G	J	K
ø40	22	22	57	46	9	62	51	31	31	20	18	M8	12	4	7.5	Rc1/4	121	Rc1/8	M10	26	31	57
ø50	28	27	68	50.5	12	72	56	36	38	26	20	M8	12	4	0	Rc3/8	138.5	Rc1/8	M10	28	38	68
ø63	28	27	80	54	13	86	70	43	38	26	22	M8	12	4	0	Rc3/8	154	Rc1/4	M12	30	38	80
ø80	36	32	98	66	13	106	80	53	43	34	26	M12	16	5	0	Rc1/2	179.5	Rc1/4	M14	34	43	98
ø100	45	41	118	74	17.5	132	101	66	51	43	28	M12	16	5	0	Rc1/2	220.5	Rc3/8	M16	36	51	118

Code														Mounting dimensions							With switch
Bore size (mm)	KA	KB	KK	L	LL	MM	N	Q	T	V	WF	X	Y	TC	TD	TE	TF	TG	TM	TN	O
ø40	66	50.5	M14x1.5	38 to 39.5	188	16	2	13	8	15	30	242	M10 depth 9	57	16	30	166.5	53.5	63	95	33
ø50	77	55	M18x1.5	41.0 to 43.5	211.5	20	2.5	14	11	16	34	276	M10 depth 9	67	18	30	188	60	80	116	36.5
ø63	89	58.5	M18x1.5	47.5 to 50.0	229	20	3	15	11	16	30	290	M12 depth 10	82	20	35	202	60	90	130	42.5
ø80	107	70.5	M22x1.5	56 to 59	261.5	25	3.5	17	13	17.5	43.5	344.5	M14 depth 11	100	25	40	243.5	65	115	165	52.5
ø100	127	78.5	M26x1.5	66 to 69	312.5	30	4	18	16	26	48	409.5	M16 depth 13	121	35	50	294	70.5	135	205	60.5

Code						With bellows						ℓ							
Bore size (mm)	T0, T5, T2, T3 HD	T1, T2Y, T3Y, T2J, T2YD/T HD	T8 HD	T2W, T3W HD	HO, HOY HD	A	WF	FF	b	d	d*	50 or less	51 to 100	101 to 150	151 to 200	201 to 300	301 to 400	401 to 500	501 or more
ø40	11	10	5	13	4	22	30	22	41	40	40	25.5	41.5	58.5	75.5	108.5	141.5	174.5	(Stroke/3.0) + 8
ø50	13	12	7	15	6	28	34	27	47	47	48	22	36	49	63	90	119	146	(Stroke/3.6) + 7.5
ø63	13	12	7	15	6	28	30	22	45	47	48	22	36	49	63	90	119	146	(Stroke/3.6) + 7.5
ø80	14.5	13.5	8.5	16.5	7.5	36	43.5	30.5	58.5	53	55	14	26	38	49	72	96	119	(Stroke/4.3) + 2.5
ø100	18.5	17.5	12.5	20.5	11.5	45	48	35.5	69.5	61	65	20	32	42	53	76	98	120	(Stroke/4.5) + 9

LCM
LCR
LCG
LCW
LCX
STM
STG
STS/STL
STR2
UCA2
ULK*
JSK/M2
JSG
JSC3/JSC4
USSD
UFCD
USC
UB
JSB3
LMB
LML
HCM
HCA
LBC
CAC4
UCAC2
CAC-N
UCAC-N
RCS2
RCC2
PCC
SHC
MCP
GLC
MFC
BBS
RRC
GRC
RV3*
NHS
HRL
LN
Hand
Chuk
MecHnd/Chuk
ShkAbs
FJ
FK
SpdContr
Ending

Dimensions (ø40 to ø100)

● Head side trunnion (TB)

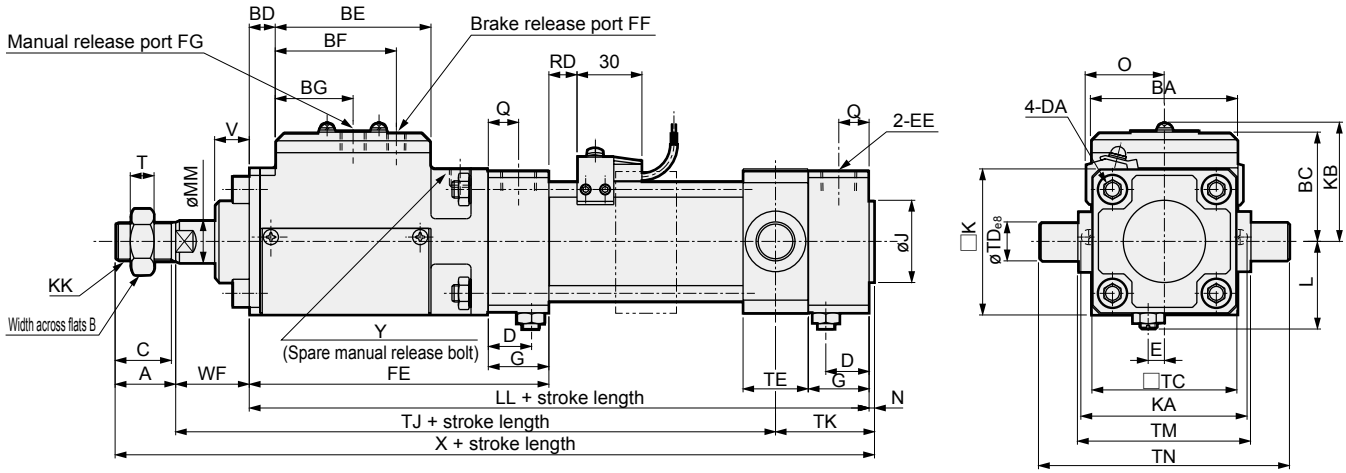

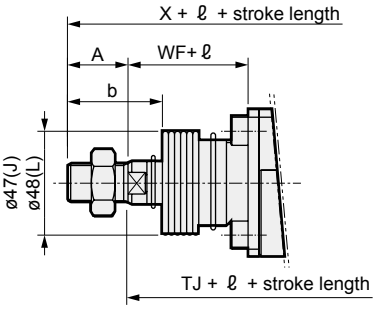

[With bellows]

*1 : For the ℓ dimension, round up below the decimal point.
*2 : Position cannot be detected at head side stroke end.
*3 : The position of the cushion needle cannot be changed.
*4 : For the dimensions of the accessories, refer to pages 806 and 807.
*5 : Non-sag block (2-dashed line) will be added depending on the stroke length. Refer to page 794 for details on dimensions.

Code	Head side trunnion (TB) basic dimensions																			
Bore size (mm)	A	B	BA	BC	BD	BE	BF	BG	BH	C	D	DA	EE	FE	FF	FG	G	J	K	KA
ø40	22	22	57	46	9	62	51	31	31	20	18	M8	Rc1/4	121	Rc1/8	M10	26	31	57	66
ø50	28	27	68	50.5	12	72	56	36	38	26	20	M8	Rc3/8	138.5	Rc1/8	M10	28	38	68	77
ø63	28	27	80	54	13	86	70	43	38	26	22	M8	Rc3/8	154	Rc1/4	M12	30	38	80	89
ø80	36	32	98	66	13	106	80	53	43	34	26	M12	Rc1/2	179.5	Rc1/4	M14	34	43	98	107
ø100	45	41	118	74	17.5	132	101	66	51	43	28	M12	Rc1/2	220.5	Rc3/8	M16	36	51	118	127

Code													Mounting dimensions							With switch
Bore size (mm)	KB	KK	L	LL	MM	N	Q	T	V	WF	X	Y	TC	TD	TE	TJ	TK	TM	TN	O
ø40	50.5	M14×1.5	38 to 39.5	188	16	2	13	8	15	30	242	M10 depth 9	57	16	30	176.5	43.5	63	95	33
ø50	55	M18×1.5	41.0 to 43.5	211.5	20	2.5	14	11	16	34	276	M10 depth 9	67	18	30	202	46	80	116	36.5
ø63	58.5	M18×1.5	47.5 to 50.0	229	20	3	15	11	16	30	290	M12 depth 10	82	20	35	211	51	90	130	42.5
ø80	70.5	M22×1.5	56 to 59	261.5	25	3.5	17	13	17.5	43.5	344.5	M14 depth 11	100	25	40	250.5	58	115	165	52.5
ø100	78.5	M26×1.5	66 to 69	312.5	30	4	18	16	26	48	409.5	M16 depth 13	121	35	50	299	65.5	135	205	60.5

Code						With bellows						ℓ							
Bore size (mm)	T0, T5, T2, T3 RD	T1, T2Y, T3Y, T2J, T2YD/T RD	T8 RD	T2W, T3W RD	HO, HOY RD	A	WF	FF	b	d	d*	50 or less	51 to 100	101 to 150	151 to 200	201 to 300	301 to 400	401 to 500	501 or more
ø40	11	10	5	13	4	22	30	22	41	40	40	25.5	41.5	58.5	75.5	108.5	141.5	174.5	(Stroke length/3.0) + 8
ø50	13	12	7	15	6	28	34	27	47	47	48	22	36	49	63	90	119	146	(Stroke length/3.6) + 7.5
ø63	13	12	7	15	6	28	30	22	45	47	48	22	36	49	63	90	119	146	(Stroke length/3.6) + 7.5
ø80	14.5	13.5	8.5	16.5	7.5	36	43.5	30.5	58.5	53	55	14	26	38	49	72	96	119	(Stroke length/4.3) + 2.5
ø100	18.5	17.5	12.5	20.5	11.5	45	48	35.5	69.5	61	65	20	32	42	53	76	98	120	(Stroke length/4.5) + 9

Dimensions (ø40 to ø100)

● Intermediate trunnion (TC)

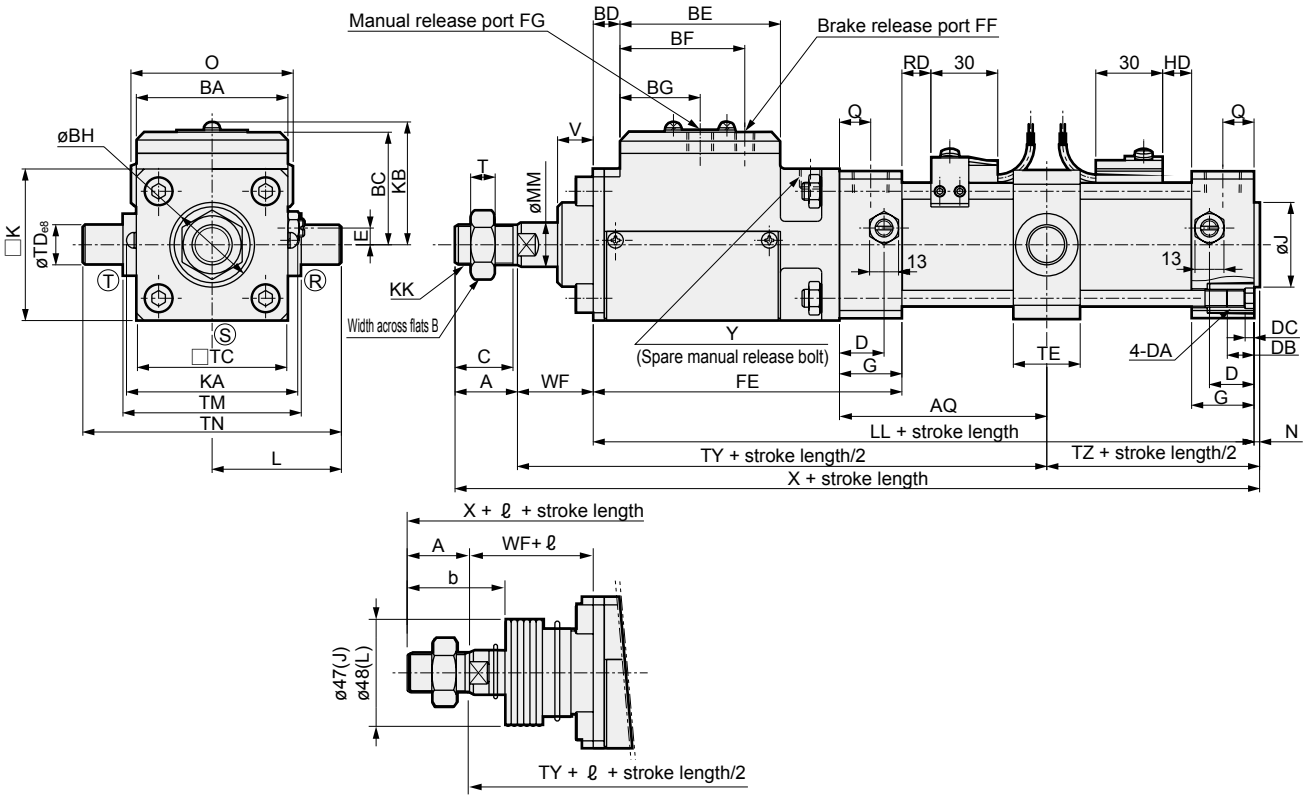

[With bellows]

*1 : For the ℓ dimension, round up below the decimal point.
*2 : Ⓡ, Ⓢ and Ⓣ indicate the cushion needle position.
*3 : For the dimensions of the accessories, refer to pages 806 and 807.

Code / Bore size (mm)	Intermediate trunnion (TC) basic dimensions																							
	A	B	BA	BC	BD	BE	BF	BG	BH	C	D	DA	DB	DC	E	EE	FE	FF	FG	G	J	K	KA	KB
ø40	22	22	57	46	9	62	51	31	31	20	18	M8	12	4	7.5	Rc1/4	121	Rc1/8	M10	26	31	57	66	50.5
ø50	28	27	68	50.5	12	72	56	36	38	26	20	M8	12	4	0	Rc3/8	138.5	Rc1/8	M10	28	38	68	77	55
ø63	28	27	80	54	13	86	70	43	38	26	22	M8	12	4	0	Rc3/8	154	Rc1/4	M12	30	38	80	89	58.5
ø80	36	32	98	66	13	106	80	53	43	34	26	M12	16	5	0	Rc1/2	179.5	Rc1/4	M14	34	43	98	107	70.5
ø100	45	41	118	74	17.5	132	101	66	51	43	28	M12	16	5	0	Rc1/2	220.5	Rc3/8	M16	36	51	118	127	78.5

Code / Bore size (mm)												Mounting dimensions								With switch				
	KK	L	LL	MM	N	Q	T	V	WF	X	Y	AQ	TC	TD	TE	TM	TN	TY	TZ	O	T0, T5, T2, T3		T1, T2Y, T3Y, T2J, T2YD/T	
																					RD	HD	RD	HD
ø40	M14×1.5	38 to 39.5	188	16	2	13	8	15	30	242	M10 depth 9	46.5+Stroke length/2	57	16	30	63	95	171.5	48.5	66	11	11	10	10
ø50	M18×1.5	41.0 to 43.5	211.5	20	2.5	14	11	16	34	276	M10 depth 9	50.5+Stroke length/2	67	18	30	80	116	195	53	73	13	13	12	12
ø63	M18×1.5	47.5 to 50.0	229	20	3	15	11	16	30	290	M12 depth 10	52.5+Stroke length/2	82	20	35	90	130	206.5	55.5	85	13	13	12	12
ø80	M22×1.5	56 to 59	261.5	25	3.5	17	13	17.5	43.5	344.5	M14 depth 11	58+Stroke length/2	100	25	40	115	165	247	61.5	105	14.5	14.5	13.5	13.5
ø100	M26×1.5	66 to 69	312.5	30	4	18	16	26	48	409.5	M16 depth 13	64+Stroke length/2	121	35	50	135	205	296.5	68	121	18.5	18.5	17.5	17.5

Code / Bore size (mm)	With bellows												ℓ							
	T8		T2W, T3W		HO, HOY		A	WF	FF	b	d	d*	50 or less	51 to 100	101 to 150	151 to 200	201 to 300	301 to 400	401 to 500	501 or more
	RD	HD	RD	HD	RD	HD														
ø40	5	5	13	13	4	4	22	30	22	41	40	40	25.5	41.5	58.5	75.5	108.5	141.5	174.5	(Stroke length/3.0) + 8
ø50	7	7	15	15	6	6	28	34	27	47	47	48	22	36	49	63	90	119	146	(Stroke length/3.6) + 7.5
ø63	7	7	15	15	6	6	28	30	22	45	47	48	22	36	49	63	90	119	146	(Stroke length/3.6) + 7.5
ø80	8.5	8.5	16.5	16.5	7.5	7.5	36	43.5	30.5	58.5	53	55	14	26	38	49	72	96	119	(Stroke length/4.3) + 2.5
ø100	12.5	12.5	20.5	20.5	11.5	11.5	45	48	35.5	69.5	61	65	20	32	42	53	76	98	120	(Stroke length/4.5) + 9

● About the non-sag block (ø40 to ø100)

Depending on its stroke length, a non-sag block will be added to the middle part of the cylinder.
The number of non-sag blocks to be added differs depending on the bore size and the stroke length as shown in the table below.

Number of non-sag blocks depending on stroke length

Tube size (mm)	Stroke length (mm)	Number of non-sag blocks
ø40	1200 to 1600	1
ø50	1200 to 1800	1
	1801 to 2000	2
ø63	1200 to 1800	1
	1801 to 2500	2
ø80	1500 to 2000	1
	2001 to 2500	2
ø100	1500 to 2000	1
	2001 to 2500	2

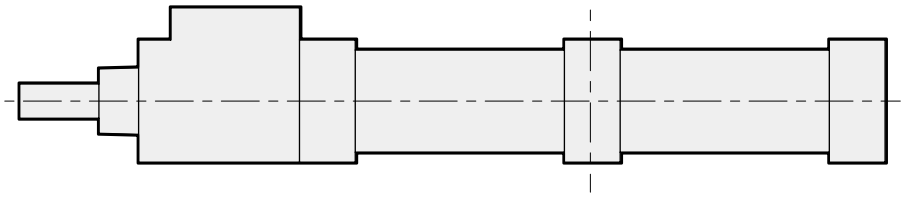

One non-sag block: To be added to the middle point between the covers.

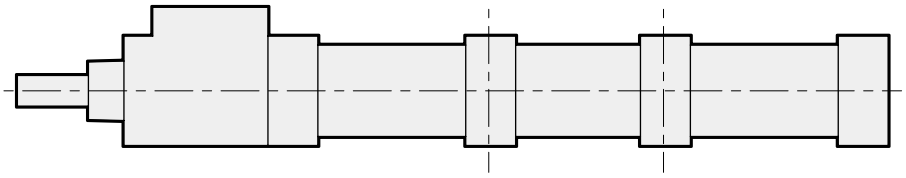

Two non-sag blocks: mount the 2 blocks so that the length of the 2 covers will be divided into 3 equal parts.

The dimensions of non-sag blocks are as shown in the figure below. When attaching the cylinder, take into account the dimensions of the non-sag blocks.

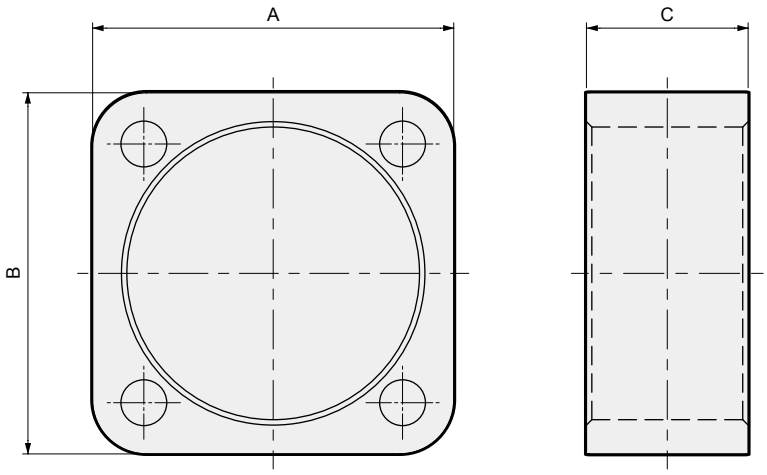

Non-sag block dimensions table

Tube size (mm)	Non-sag block dimensions		
	A	B	C
ø40	56	57	30
ø50	66	67	30
ø63	81	82	35
ø80	99	100	40
ø100	120	121	50

MEMO

LCM
LCR
LCG
LCW
LCX
STM
STG
STS/STL
STR2
UCA2
ULK*
JSK/M2
JSG
JSC3/JSC4
USSD
UFCD
USC
UB
JSB3
LMB
LML
HCM
HCA
LBC
CAC4
UCAC2
CAC-N
UCAC-N
RCS2
RCC2
PCC
SHC
MCP
GLC
MFC
BBS
RRC
GRC
RV3*
NHS
HRL
LN
Hand
Chuk
MecHnd/Chuk
ShkAbs
FJ
FK
SpdContr
Ending

Dimensions (ø125 to ø180)

● Axial foot (LB)

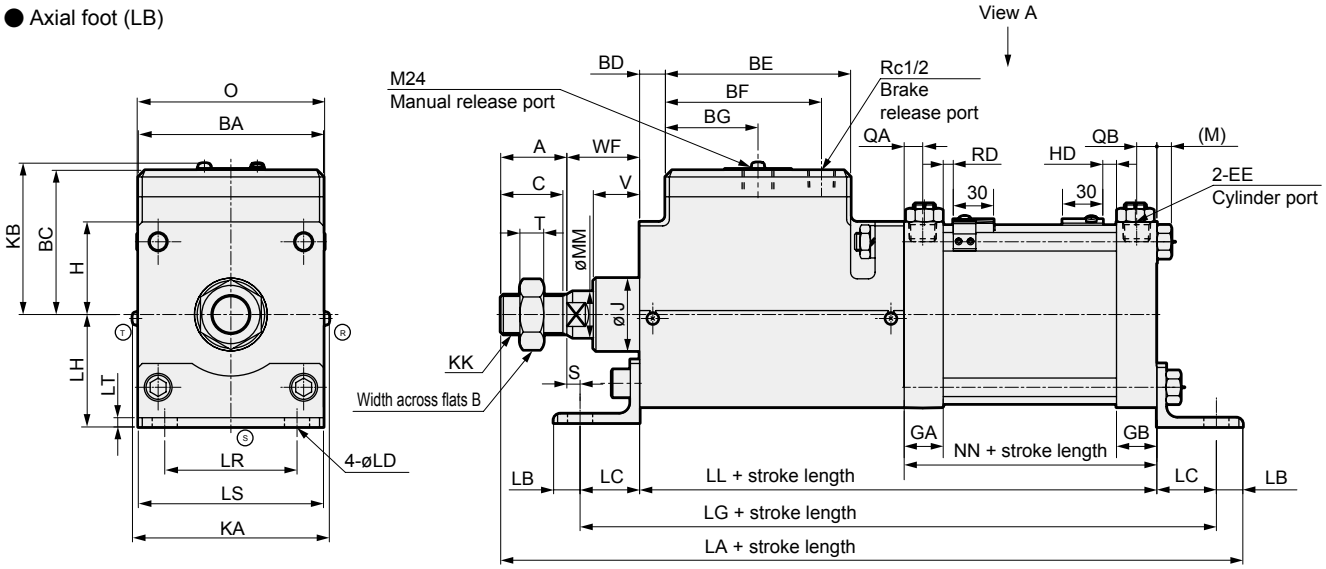

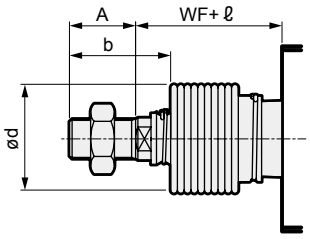

[With bellows]

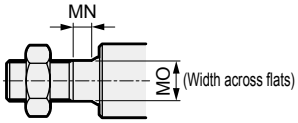

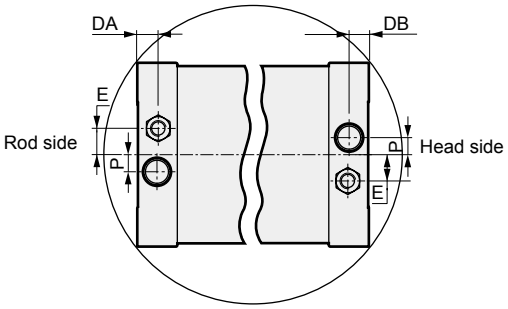

Port position diagram (View A)

*1 : Ⓡ, Ⓢ and Ⓣ indicate the cushion needle position.
*2 : ℓ dimensions below decimal point are rounded up.
*3 : For the dimensions of the accessories, refer to page 808.

RD: Rod side max. sensitivity position
HD: Head side max. sensitivity position

Code	Axial foot (LB) basic dimensions																		
Bore size (mm)	A	B	BA	BC	BD	BE	BF	BG	C	DA	DB	E	EE	F	GA	GB	J	KA	KB
ø125	50	46	140	109	19.5	140	118	70	47	15	16	20	Rc1/2	200	29.5	30.5	55	150	115
ø140	50	46	157	116.5	18.5	157	128.5	78.5	47	19	20	20	Rc3/4	216	33.5	34.5	55	167	122.5
ø160	56	55	177	128	23	177	146.5	88.5	53	19	20	24	Rc3/4	245	33.5	34.5	62.5	190	134
ø180	63	60	200	146	14	200	170	100	60	19	20	24	Rc3/4	264	33.5	34.5	68.5	213	152

Code															Mounting dimensions				
Bore size (mm)	KK	LL	M	MM	MN	MO	NN	P	QA	QB	S	T	V	WF	LA	LB	LC	LD	LG
ø125	M30×1.5	291	11	35	14	30	91	13	14	15	10	18	35	55	460	19	45	19	381
ø140	M30×1.5	318	11	35	14	30	102	15	16	17	7	18	35	57	495	20	50	19	418
ø160	M36×1.5	350	13	40	16	36	105	15	16	17	18.5	21	48	71.5	550.5	20	53	19	456
ø180	M40×1.5	373	15	45	18	41	109	15	16	17	18.5	24	53	78.5	601.5	27	60	24	493

Code					With bellows			With switch							
Bore size (mm)								T0,T5,T2,T3		T2W,T3W		T2Y,T3Y,T2YD,T1,T2J		T8	
	LH	LR	LS	LT	b	d	ℓ	RD	HD	RD	HD	RD	HD	RD	HD
ø125	85	100	140	7	74	75	(Stroke length/4.55)+11	8.5	4.0	10.5	5.5	7.5	2.5	2.5	0.0
ø140	100	112	157	8	74	75	(Stroke length/4.55)+9	8.5	7.0	10.5	8.5	7.5	5.5	2.5	0.5
ø160	106	118	177	10	81	80	(Stroke length/5.15)+9	10.5	8.0	12.5	10.0	9.5	7.0	4.5	1.5
ø180	125	132	200	10	90	90	(Stroke length/5.15)+9	13.0	9.5	14.5	11.5	11.5	8.5	6.5	3.5

Dimensions (ø125 to ø180)

● Rod side flange (FA)

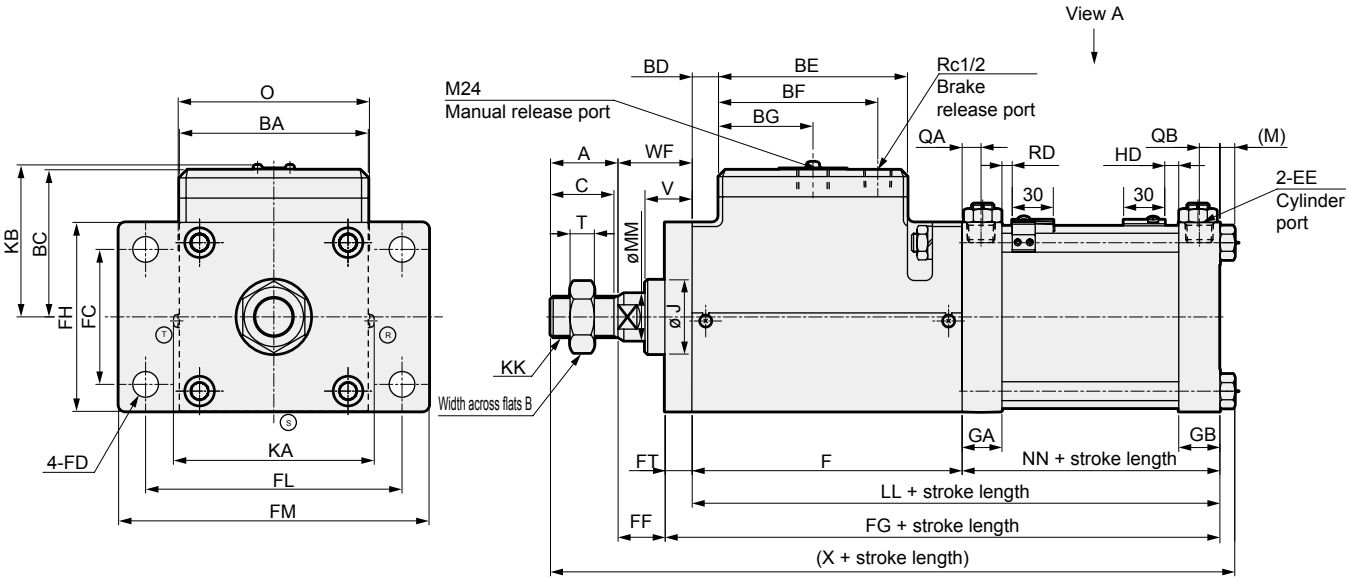

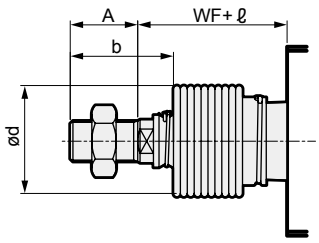

[With bellows]

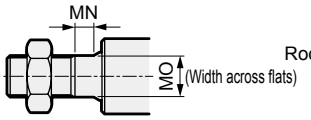

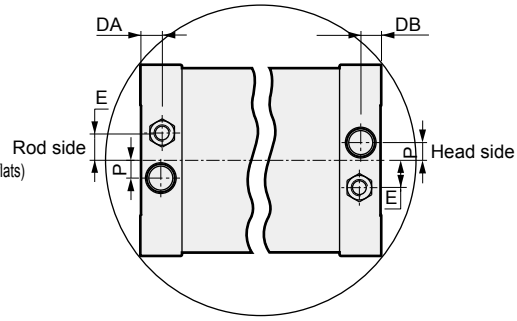

Port position diagram (View A)

*1 : Ⓡ, Ⓢ and Ⓣ indicate the cushion needle position.
*2 : ℓ dimensions below decimal point are rounded up.
*3 : For the dimensions of the accessories, refer to page 808.

RD: Rod side max. sensitivity position
HD: Head side max. sensitivity position

Code	Rod side flange (FA) basic dimensions																		
Bore size (mm)	A	B	BA	BC	BD	BE	BF	BG	C	DA	DB	E	EE	F	GA	GB	J	KA	KB
ø125	50	46	140	109	19.5	140	118	70	47	15	16	20	Rc1/2	200	29.5	30.5	55	150	115
ø140	50	46	157	116.5	18.5	157	128.5	78.5	47	19	20	20	Rc3/4	216	33.5	34.5	55	167	122.5
ø160	56	55	177	128	23	177	146.5	88.5	53	19	20	24	Rc3/4	245	33.5	34.5	62.5	190	134
ø180	63	60	200	146	14	200	170	100	60	19	20	24	Rc3/4	264	33.5	34.5	68.5	213	152

Code															Mounting dimensions			
Bore size (mm)	KK	LL	M	MM	MN	MO	NN	P	QA	QB	T	V	WF	X	FC	FD	FF	FG
ø125	M30×1.5	291	11	35	14	30	91	13	14	15	18	35	55	407	100	19	35	311
ø140	M30×1.5	318	11	35	14	30	102	15	16	17	18	35	57	436	112	19	37	338
ø160	M36×1.5	350	13	40	16	36	105	15	16	17	21	48	71.5	490.5	118	19	49.5	372
ø180	M40×1.5	373	15	45	18	41	109	15	16	17	24	53	78.5	529.5	132	24	53.5	398

Code					With bellows			With switch							
Bore size (mm)								T0,T5,T2,T3		T2W,T3W		T2Y,T3Y,T2YD,T1,T2J		T8	
	FH	FL	FM	FT	b	d	ℓ	RD	HD	RD	HD	RD	HD	RD	HD
ø125	140	190	230	20	74	75	(Stroke length/4.55)+11	8.5	4.0	10.5	5.5	7.5	2.5	2.5	0.0
ø140	157	212	250	20	74	75	(Stroke length/4.55)+9	8.5	7.0	10.5	8.5	7.5	5.5	2.5	0.5
ø160	177	236	280	22	81	80	(Stroke length/5.15)+9	10.5	8.0	12.5	10.0	9.5	7.0	4.5	1.5
ø180	200	265	310	25	90	90	(Stroke length/5.15)+9	13.0	9.5	14.5	11.5	11.5	8.5	6.5	3.5

LCM
LCR
LCG
LCW
LCX
STM
STG
STS/STL
STR2
UCA2
ULK*
JSK/M2
JSG
JSC3/JSC4
USSD
UFCD
USC
UB
JSB3
LMB
LML
HCM
HCA
LBC
CAC4
UCAC2
CAC-N
UCAC-N
RCS2
RCC2
PCC
SHC
MCP
GLC
MFC
BBS
RRC
GRC
RV3*
NHS
HRL
LN
Hand
Chuk
MecHnd/Chuk
ShkAbs
FJ
FK
SpdContr
Ending

Dimensions (ø125 to ø180)

● Head side flange (FB)

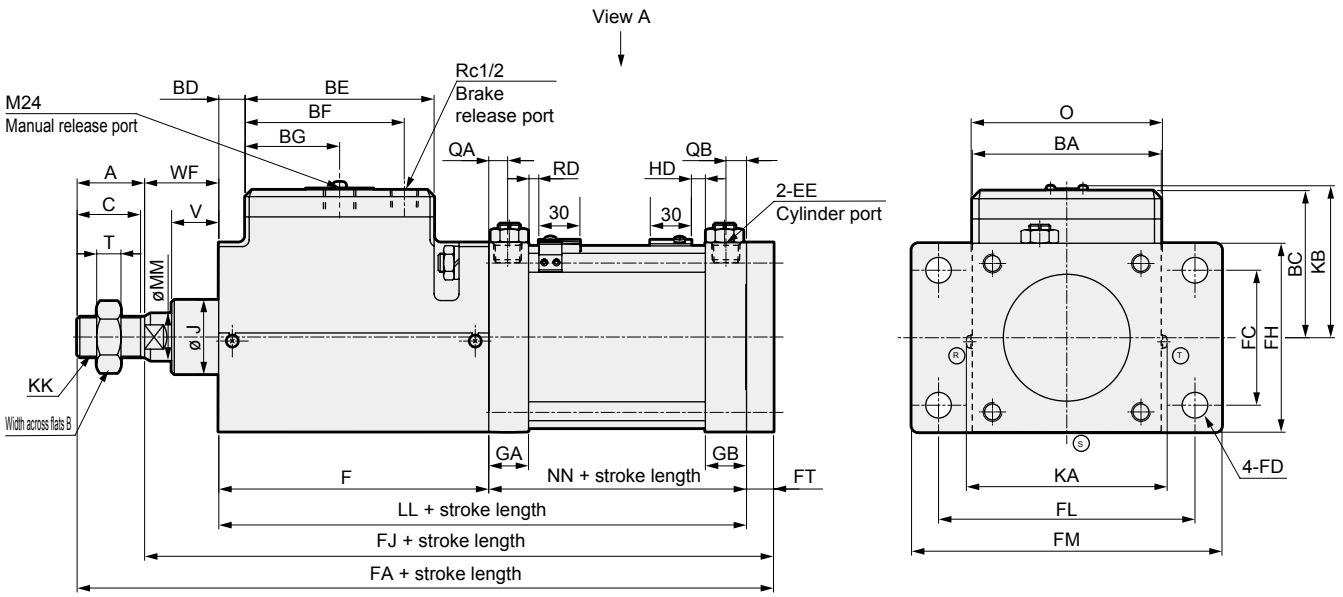

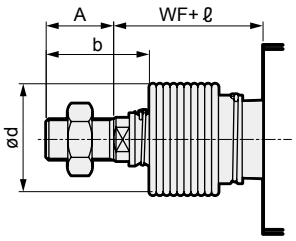

[With bellows]

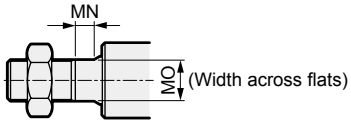

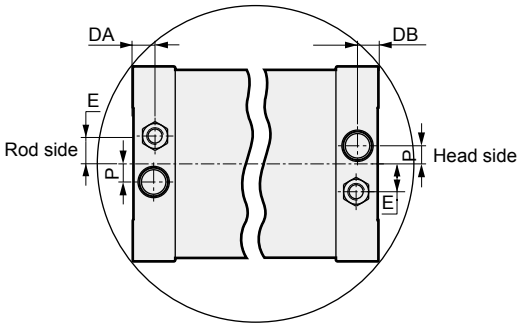

Port position diagram (View A)

*1 : Ⓡ, Ⓢ and Ⓣ indicate the cushion needle position.
*2 : ℓ dimensions below decimal point are rounded up.
*3 : For the dimensions of the accessories, refer to page 808.

RD: Rod side max. sensitivity position
HD: Head side max. sensitivity position

Code	Head side flange (FB) basic dimensions																		
Bore size (mm)	A	B	BA	BC	BD	BE	BF	BG	C	DA	DB	E	EE	F	GA	GB	J	KA	KB
ø125	50	46	140	109	19.5	140	118	70	47	15	16	20	Rc1/2	200	29.5	30.5	55	150	115
ø140	50	46	157	116.5	18.5	157	128.5	78.5	47	19	20	20	Rc3/4	216	33.5	34.5	55	167	122.5
ø160	56	55	177	128	23	177	146.5	88.5	53	19	20	24	Rc3/4	245	33.5	34.5	62.5	190	134
ø180	63	60	200	146	14	200	170	100	60	19	20	24	Rc3/4	264	33.5	34.5	68.5	213	152

Code													Mounting dimensions			
Bore size (mm)	KK	LL	MM	MN	MO	NN	P	QA	QB	T	V	WF	FA	FC	FD	FH
ø125	M30×1.5	291	35	14	30	91	13	14	15	18	35	55	410	100	19	140
ø140	M30×1.5	318	35	14	30	102	15	16	17	18	35	57	444	112	19	157
ø160	M36×1.5	350	40	16	36	105	15	16	17	21	48	71.5	496.5	118	19	177
ø180	M40×1.5	373	45	18	41	109	15	16	17	24	53	78.5	539.5	132	24	200

Code					With bellows			With switch							
Bore size (mm)								T0,T5,T2,T3		T2W,T3W		T2Y,T3Y,T2YD,T1,T2J		T8	
	FJ	FL	FM	FT	b	d	ℓ	RD	HD	RD	HD	RD	HD	RD	HD
ø125	360	190	230	14	74	75	(Stroke length/4.55)+11	8.5	4.0	10.5	5.5	7.5	2.5	2.5	0.0
ø140	394	212	250	19	74	75	(Stroke length/4.55)+9	8.5	7.0	10.5	8.5	7.5	5.5	2.5	0.5
ø160	440.5	236	280	19	81	80	(Stroke length/5.15)+9	10.5	8.0	12.5	10.0	9.5	7.0	4.5	1.5
ø180	476.5	265	310	25	90	90	(Stroke length/5.15)+9	13.0	9.5	14.5	11.5	11.5	8.5	6.5	3.5

Dimensions (ø125 to ø180)

● Eye bracket (CA)

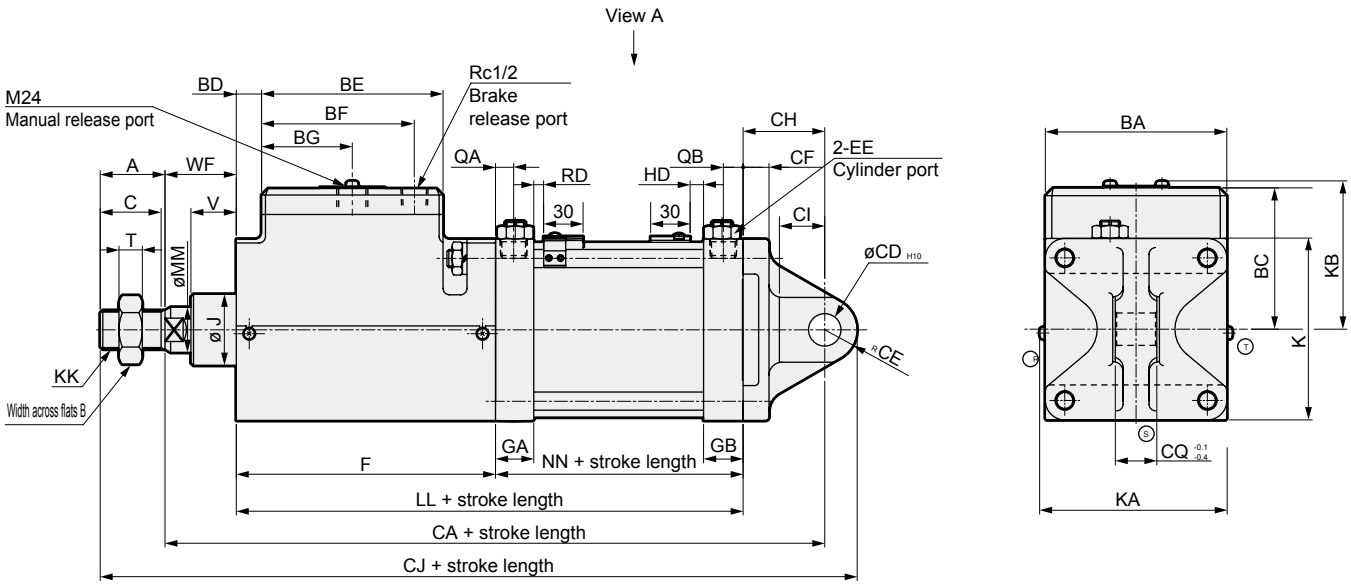

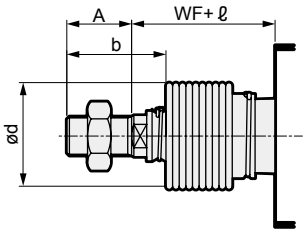

[With bellows]

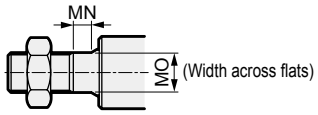

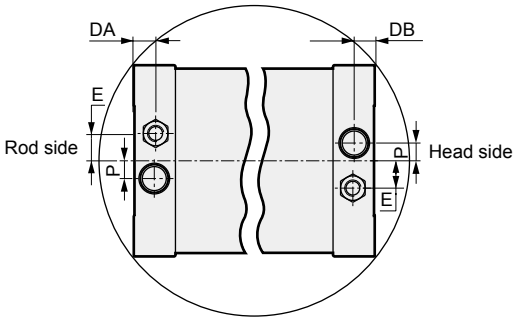

Port position diagram (View A)

*1 : Ⓡ, Ⓢ and Ⓣ indicate the cushion needle position.
*2 : ℓ dimensions below decimal point are rounded up.
*3 : For the dimensions of the accessories, refer to page 808.

RD: Rod side max. sensitivity position
HD: Head side max. sensitivity position

Code	Eye bracket (CA) basic dimensions																			
Bore size (mm)	A	B	BA	BC	BD	BE	BF	BG	C	DA	DB	E	EE	F	GA	GB	J	K	KA	KB
ø125	50	46	140	109	19.5	140	118	70	47	15	16	20	Rc1/2	200	29.5	30.5	55	140	150	115
ø140	50	46	157	116.5	18.5	157	128.5	78.5	47	19	20	20	Rc3/4	216	33.5	34.5	55	157	167	122.5
ø160	56	55	177	128	23	177	146.5	88.5	53	19	20	24	Rc3/4	245	33.5	34.5	62.5	177	190	134
ø180	63	60	200	146	14	200	170	100	60	19	20	24	Rc3/4	264	33.5	34.5	68.5	200	213	152

Code													Mounting dimensions			
Bore size (mm)	KK	LL	MM	MN	MO	NN	P	QA	QB	T	V	WF	CA	CD	CE	CF
ø125	M30×1.5	291	35	14	30	91	13	14	15	18	35	55	409	25	25	20
ø140	M30×1.5	318	35	14	30	102	15	16	17	18	35	57	450	28	28	22
ø160	M36×1.5	350	40	16	36	105	15	16	17	21	48	71.5	496.5	32	32	24
ø180	M40×1.5	373	45	18	41	109	15	16	17	24	53	78.5	541.5	40	40	25

Code					With bellows			With switch							
Bore size (mm)								T0,T5,T2,T3		T2W,T3W		T2Y,T3Y,T2YD,T1,T2J		T8	
	CH	CI	CJ	CQ	b	d	ℓ	RD	HD	RD	HD	RD	HD	RD	HD
ø125	63	35	484	32	74	75	(Stroke length/4.55)+11	8.5	4.0	10.5	5.5	7.5	2.5	2.5	0.0
ø140	75	40	528	36	74	75	(Stroke length/4.55)+9	8.5	7.0	10.5	8.5	7.5	5.5	2.5	0.5
ø160	75	40	584.5	40	81	80	(Stroke length/5.15)+9	10.5	8.0	12.5	10.0	9.5	7.0	4.5	1.5
ø180	90	55	644.5	50	90	90	(Stroke length/5.15)+9	13.0	9.5	14.5	11.5	11.5	8.5	6.5	3.5

LCM
LCR
LCG
LCW
LCX
STM
STG
STS/STL
STR2
UCA2
ULK*
JSK/M2
JSG
JSC3/JSC4
USSD
UFCD
USC
UB
JSB3
LMB
LML
HCM
HCA
LBC
CAC4
UCAC2
CAC-N
UCAC-N
RCS2
RCC2
PCC
SHC
MCP
GLC
MFC
BBS
RRC
GRC
RV3*
NHS
HRL
LN
Hand
Chuk
MecHnd/Chuk
ShkAbs
FJ
FK
SpdContr
Ending

Dimensions (ø125 to ø180)

● Clevis bracket (CB)

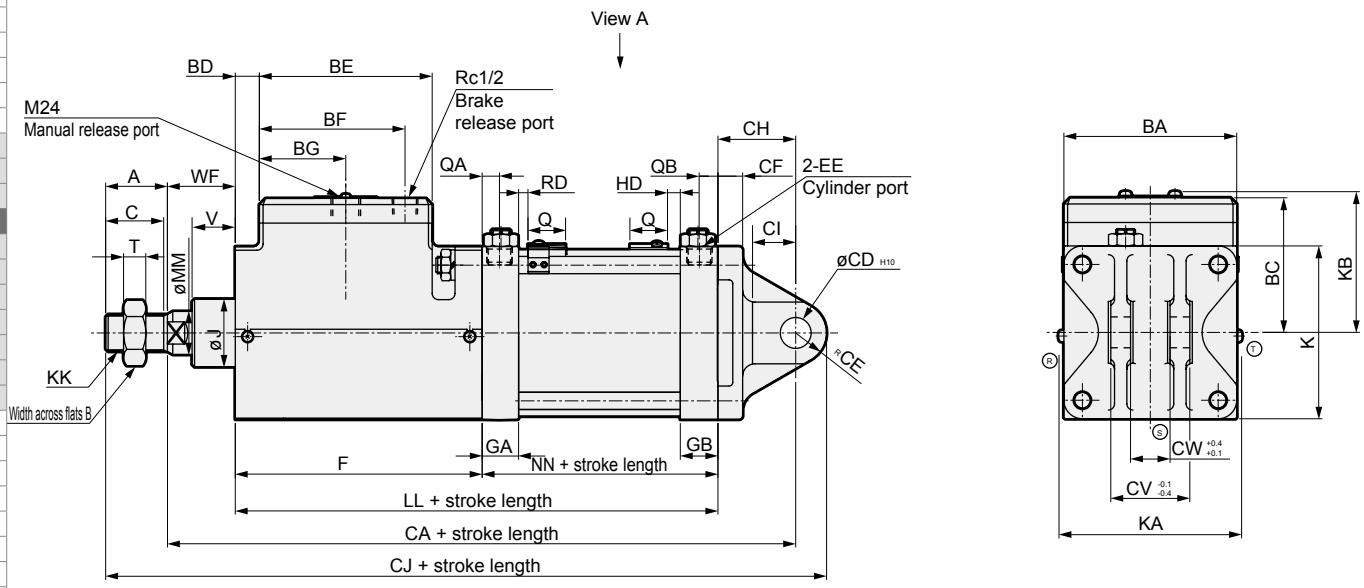

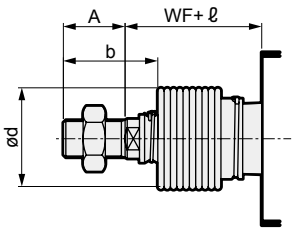

[With bellows]

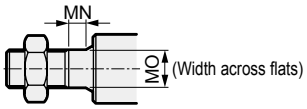

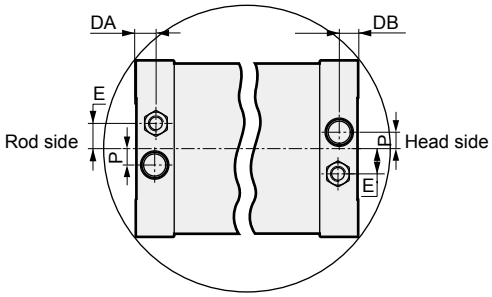

Port position diagram (View A)

*1 : Ⓡ, Ⓢ and Ⓣ indicate the cushion needle position.
*2 : ℓ dimensions below decimal point are rounded up.
*3 : For the dimensions of the accessories, refer to page 808.

RD: Rod side max. sensitivity position
HD: Head side max. sensitivity position

Code	Clevis bracket (CB) basic dimensions																			
Bore size (mm)	A	B	BA	BC	BD	BE	BF	BG	C	DA	DB	E	EE	F	GA	GB	J	K	KA	KB
ø125	50	46	140	109	19.5	140	118	70	47	15	16	20	Rc1/2	200	29.5	30.5	55	140	150	115
ø140	50	46	157	116.5	18.5	157	128.5	78.5	47	19	20	20	Rc3/4	216	33.5	34.5	55	157	167	122.5
ø160	56	55	177	128	23	177	146.5	88.5	53	19	20	24	Rc3/4	245	33.5	34.5	62.5	177	190	134
ø180	63	60	200	146	14	200	170	100	60	19	20	24	Rc3/4	264	33.5	34.5	68.5	200	213	152

Code													Mounting dimensions					
Bore size (mm)	KK	LL	MM	MN	MO	NN	P	QA	QB	T	V	WF	CA	CD	CE	CF	CH	CI
ø125	M30×1.5	291	35	14	30	91	13	14	15	18	35	55	409	25	25	20	63	35
ø140	M30×1.5	318	35	14	30	102	15	16	17	18	35	57	450	28	28	22	75	40
ø160	M36×1.5	350	40	16	36	105	15	16	17	21	48	71.5	496.5	32	32	24	75	40
ø180	M40×1.5	373	45	18	41	109	15	16	17	24	53	78.5	541.5	40	40	25	90	55

Code				With bellows			With switch							
Bore size (mm)							T0,T5,T2,T3		T2W,T3W		T2Y,T3Y,T2YD,T1,T2J		T8	
	CJ	CV	CW	b	d	ℓ	RD	HD	RD	HD	RD	HD	RD	HD
ø125	484	64	32	74	75	(Stroke length/4.55)+11	8.5	4.0	10.5	5.5	7.5	2.5	2.5	0.0
ø140	528	72	36	74	75	(Stroke length/4.55)+9	8.5	7.0	10.5	8.5	7.5	5.5	2.5	0.5
ø160	584.5	80	40	81	80	(Stroke length/5.15)+9	10.5	8.0	12.5	10.0	9.5	7.0	4.5	1.5
ø180	644.5	100	50	90	90	(Stroke length/5.15)+9	13.0	9.5	14.5	11.5	11.5	8.5	6.5	3.5

Dimensions (ø125 to ø180)

● Intermediate trunnion (TC)

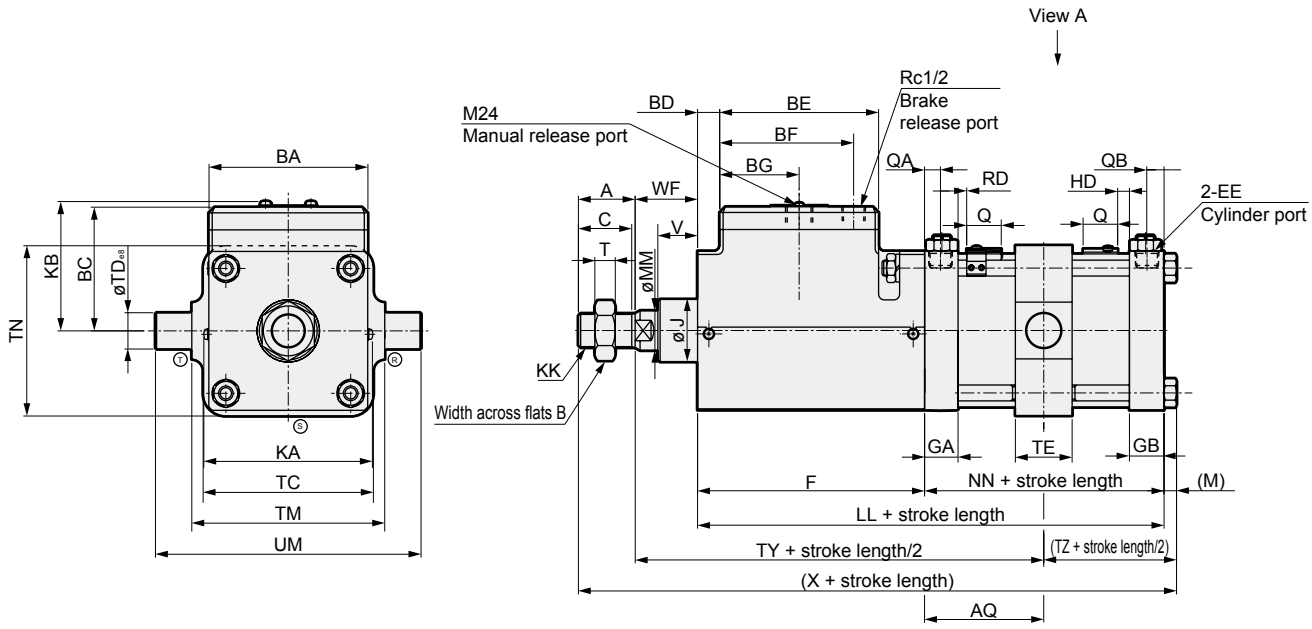

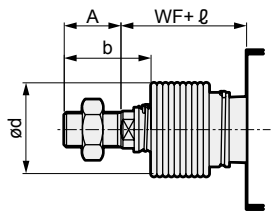

[With bellows]

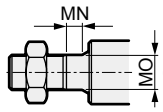

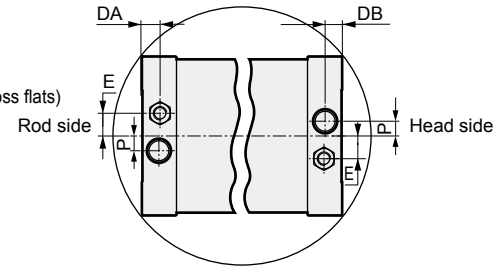

Port position diagram (View A)

*1 : Ⓡ, Ⓢ and Ⓣ indicate the cushion needle position.
*2 : ℓ dimensions below decimal point are rounded up.
*3 : For the dimensions of the accessories, refer to page 808.

RD: Rod side max. sensitivity position
HD: Head side max. sensitivity position

Code	Intermediate trunnion (TC) basic dimensions																		
Bore size (mm)	A	B	BA	BC	BD	BE	BF	BG	C	DA	DB	E	EE	F	GA	GB	J	KA	KB
ø125	50	46	140	109	19.5	140	118	70	47	15	16	20	Rc1/2	200	29.5	30.5	55	150	115
ø140	50	46	157	116.5	18.5	157	128.5	78.5	47	19	20	20	Rc3/4	216	33.5	34.5	55	167	122.5
ø160	56	55	177	128	23	177	146.5	88.5	53	19	20	24	Rc3/4	245	33.5	34.5	62.5	190	134
ø180	63	60	200	146	14	200	170	100	60	19	20	24	Rc3/4	264	33.5	34.5	68.5	213	152

Code															Mounting dimensions		
Bore size (mm)	KK	LL	M	MM	MN	MO	NN	P	QA	QB	T	V	WF	X	AQ	TC	TN
ø125	M30×1.5	291	11	35	14	30	91	13	14	15	18	35	55	407	45+stroke length/2	150	150
ø140	M30×1.5	318	11	35	14	30	102	15	16	17	18	35	57	436	51.5+stroke length/2	154	170
ø160	M36×1.5	350	13	40	16	36	105	15	16	17	21	48	71.5	490.5	52+stroke length/2	190	190
ø180	M40×1.5	373	15	45	18	41	109	15	16	17	24	53	78.5	529.5	54+stroke length/2	210	210

Code	Mounting dimensions						With bellows			With switch							
Bore size (mm)										T0,T5,T2,T3		T2W,T3W		T2Y,T3Y,T2YD,T1,T2J		T8	
	TD	TE	TM	UM	TY	TZ	b	d	ℓ	RD	HD	RD	HD	RD	HD	RD	HD
ø125	32	50	170	234	300	57	74	75	(Stroke length/4.55)+11	8.5	4.0	10.5	5.5	7.5	2.5	2.5	0.0
ø140	36	55	190	262	323.5	62.5	74	75	(Stroke length/4.55)+9	8.5	7.0	10.5	8.5	7.5	5.5	2.5	0.5
ø160	40	60	212	292	368.5	66	81	80	(Stroke length/5.15)+9	10.5	8.0	12.5	10.0	9.5	7.0	4.5	1.5
ø180	45	65	236	326	396.5	70	90	90	(Stroke length/5.15)+9	13.0	9.5	14.5	11.5	11.5	8.5	6.5	3.5

LCM
LCR
LCG
LCW
LCX
STM
STG
STS/STL
STR2
UCA2
ULK*
JSK/M2
JSG
JSC3/JSC4
USSD
UFCD
USC
UB
JSB3
LMB
LML
HCM
HCA
LBC
CAC4
UCAC2
CAC-N
UCAC-N
RCS2
RCC2
PCC
SHC
MCP
GLC
MFC
BBS
RRC
GRC
RV3*
NHS
HRL
LN
Hand
Chuk
MecHnd/Chuk
ShkAbs
FJ
FK
SpdContr
Ending

Dimensions (ø125 to ø180)

● Rod side trunnion (TA)

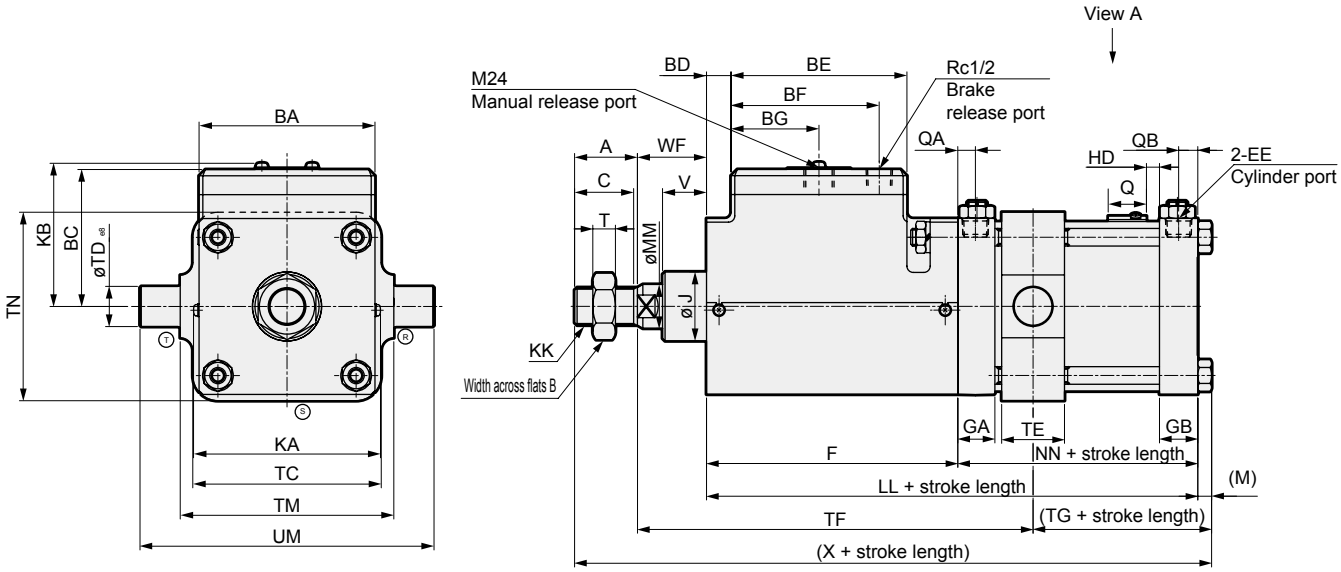

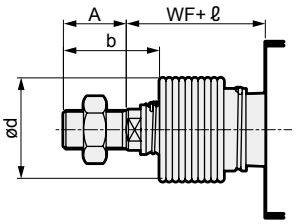

[With bellows]

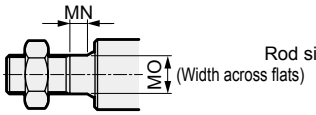

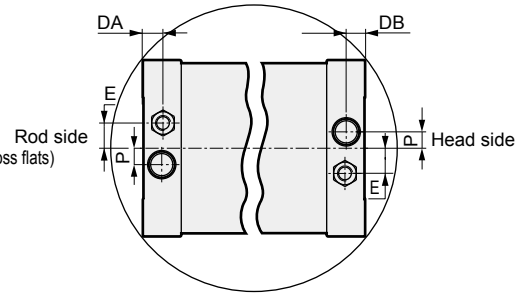

Port position diagram (View A)

*1 : Ⓡ, Ⓢ and Ⓣ indicate the cushion needle position.
*2 : ℓ dimensions below decimal point are rounded up.
*3 : For the dimensions of the accessories, refer to page 808.

RD: Rod side max. sensitivity position
HD: Head side max. sensitivity position

Code	Rod side trunnion (TA) basic dimensions																		
Bore size (mm)	A	B	BA	BC	BD	BE	BF	BG	C	DA	DB	E	EE	F	GA	GB	J	KA	KB
ø125	50	46	140	109	19.5	140	118	70	47	15	16	20	Rc1/2	200	29.5	30.5	55	150	115
ø140	50	46	157	116.5	18.5	157	128.5	78.5	47	19	20	20	Rc3/4	216	33.5	34.5	55	167	122.5
ø160	56	55	177	128	23	177	146.5	88.5	53	19	20	24	Rc3/4	245	33.5	34.5	62.5	190	134
ø180	63	60	200	146	14	200	170	100	60	19	20	24	Rc3/4	264	33.5	34.5	68.5	213	152

Code															Mounting dimensions			
Bore size (mm)	KK	LL	M	MM	MN	MO	NN	P	QA	QB	T	V	WF	X	TC	TD	TE	TF
ø125	M30×1.5	291	11	35	14	30	91	13	14	15	18	35	55	407	150	32	50	315
ø140	M30×1.5	318	11	35	14	30	102	15	16	17	18	35	57	436	154	36	55	339.5
ø160	M36×1.5	350	13	40	16	36	105	15	16	17	21	48	71.5	490.5	190	40	60	385.5
ø180	M40×1.5	373	15	45	18	41	109	15	16	17	24	53	78.5	529.5	210	45	65	414

Code					With bellows			With switch							
Bore size (mm)								T0,T5,T2,T3		T2W,T3W		T2Y,T3Y,T2YD,T1,T2J		T8	
	TG	TM	TN	UM	b	d	ℓ	RD	HD	RD	HD	RD	HD	RD	HD
ø125	42	170	150	234	74	75	(Stroke length/4.55)+11	8.5	4.0	10.5	5.5	7.5	2.5	2.5	0.0
ø140	46.5	190	170	262	74	75	(Stroke length/4.55)+9	8.5	7.0	10.5	8.5	7.5	5.5	2.5	0.5
ø160	49	212	190	292	81	80	(Stroke length/5.15)+9	10.5	8.0	12.5	10.0	9.5	7.0	4.5	1.5
ø180	52.5	236	210	326	90	90	(Stroke length/5.15)+9	13.0	9.5	14.5	11.5	11.5	8.5	6.5	3.5

Dimensions (ø125 to ø180)

● Head side trunnion (TB)

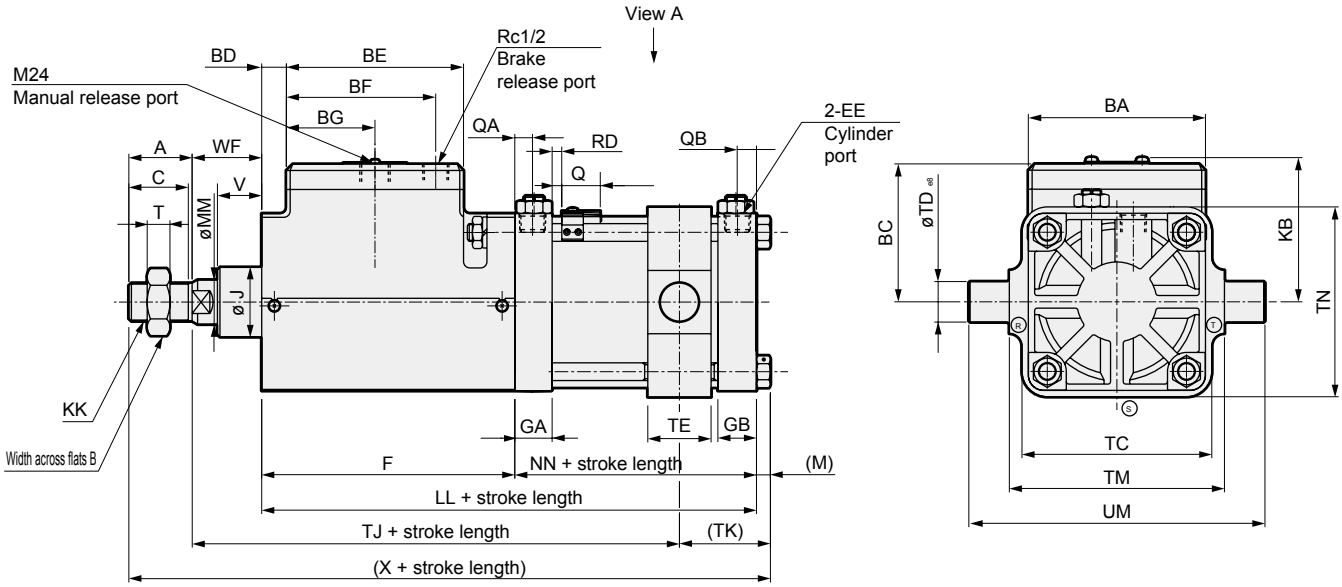

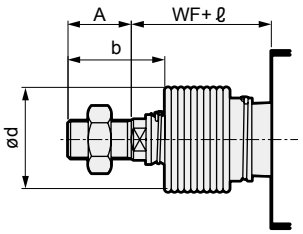

[With bellows]

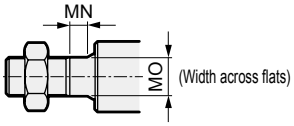

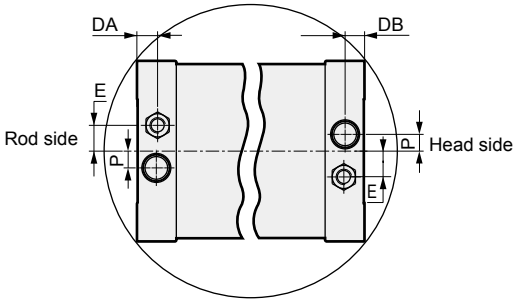

Port position diagram (View A)

*1 : Ⓡ, Ⓢ and Ⓣ indicate the cushion needle position.
*2 : ℓ dimensions below decimal point are rounded up.
*3 : For the dimensions of the accessories, refer to page 808.

RD: Rod side max. sensitivity position
HD: Head side max. sensitivity position

Code	Head side trunnion (TB) basic dimensions																		
Bore size (mm)	A	B	BA	BC	BD	BE	BF	BG	C	DA	DB	E	EE	F	GA	GB	J	KA	KB
ø125	50	46	140	109	19.5	140	118	70	47	15	16	20	Rc1/2	200	29.5	30.5	55	150	115
ø140	50	46	157	116.5	18.5	157	128.5	78.5	47	19	20	20	Rc3/4	216	33.5	34.5	55	167	122.5
ø160	56	55	177	128	23	177	146.5	88.5	53	19	20	24	Rc3/4	245	33.5	34.5	62.5	190	134
ø180	63	60	200	146	14	200	170	100	60	19	20	24	Rc3/4	264	33.5	34.5	68.5	213	152

Code															Mounting dimensions			
Bore size (mm)	KK	LL	M	MM	MN	MO	NN	P	QA	QB	T	V	WF	X	TC	TD	TE	TJ
ø125	M30×1.5	291	11	35	14	30	91	13	14	15	18	35	55	407	150	32	50	285
ø140	M30×1.5	318	11	35	14	30	102	15	16	17	18	35	57	436	154	36	55	307.5
ø160	M36×1.5	350	13	40	16	36	105	15	16	17	21	48	71.5	490.5	190	40	60	351.5
ø180	M40×1.5	373	15	45	18	41	109	15	16	17	24	53	78.5	529.5	210	45	65	379

Code					With bellows			With switch							
Bore size (mm)								T0,T5,T2,T3		T2W,T3W		T2Y,T3Y,T2YD,T1,T2J		T8	
	TK	TM	TN	UM	b	d	ℓ	RD	HD	RD	HD	RD	HD	RD	HD
ø125	72	170	150	234	74	75	(Stroke length/4.55)+11	8.5	4.0	10.5	5.5	7.5	2.5	2.5	0.0
ø140	78.5	190	170	262	74	75	(Stroke length/4.55)+9	8.5	7.0	10.5	8.5	7.5	5.5	2.5	0.5
ø160	83	212	190	292	81	80	(Stroke length/5.15)+9	10.5	8.0	12.5	10.0	9.5	7.0	4.5	1.5
ø180	87.5	236	210	326	90	90	(Stroke length/5.15)+9	13.0	9.5	14.5	11.5	11.5	8.5	6.5	3.5

LCM
LCR
LCG
LCW
LCX
STM
STG
STS/STL
STR2
UCA2
ULK*
JSK/M2
JSG
JSC3/JSC4
USSD
UFCD
USC
UB
JSB3
LMB
LML
HCM
HCA
LBC
CAC4
UCAC2
CAC-N
UCAC-N
RCS2
RCC2
PCC
SHC
MCP
GLC
MFC
BBS
RRC
GRC
RV3*
NHS
HRL
LN
Hand
Chuk
MecHnd/Chuk
ShkAbs
FJ
FK
SpdContr
Ending

● About the non-sag block (ø125, ø140)

A non-sag block will be added to the middle part of the cylinder if the stroke length is in the range given in the table below.

Additional stroke length to the non-sag block

Bore size (mm)	Stroke length (mm)
ø125	1801 to 2000
ø140	

Code / Bore size (mm)	TM	TN	CE
ø125	150	150	50
ø140	190	170	55

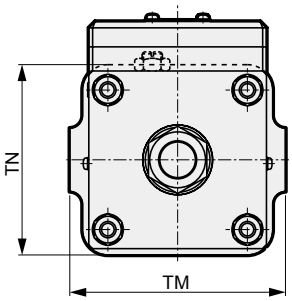

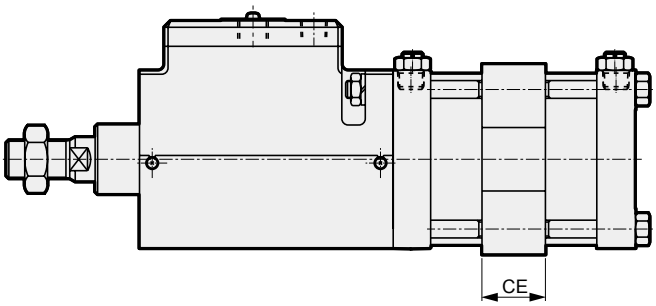

MEMO

LCM
LCR
LCG
LCW
LCX
STM
STG
STS/STL
STR2
UCA2
ULK*
JSK/M2
JSG
JSC3/JSC4
USSD
UFCD
USC
UB
JSB3
LMB
LML
HCM
HCA
LBC
CAC4
UCAC2
CAC-N
UCAC-N
RCS2
RCC2
PCC
SHC
MCP
GLC
MFC
BBS
RRC
GRC
RV3*
NHS
HRL
LN
Hand
Chuk
MecHnd/Chuk
ShkAbs
FJ
FK
SpdContr
Ending

JSC3 Series common accessory dimensions (rod eye/No. 2 bracket) ø40 to ø100

·The installation dimensions for the clevis, rod eye, and No. 2 bracket (øCD, CW, CQ) are all the same, and any combination is possible.

· Specify the model No. when placing an order.

● Rod eye/clevis dimensions

Rod eye (I)

Material: Cast iron
Painting

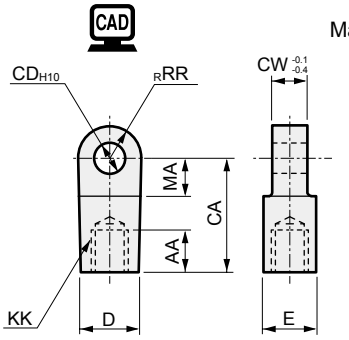

Model No.	Bore size (mm)	AA	CA	CD	CW	D	E	KK	MA	RR	Weight (kg)
S1-I-40	40	20	50	12	18	27	27	M14×1.5	21	16	0.26
S1-I-50	50	21	50	12	18	27	27	M18×1.5	21	16	0.24
S1-I-63	63	21	50	14	20	27	27	M18×1.5	21	16	0.25
S1-I-80	80	30	70	20	28	46	41	M22×1.5	30	25	0.80
S1-I-100	100	30	70	20	28	46	41	M26×1.5	30	25	0.84

Rod clevis (Y)

Material: Cast iron
Painting

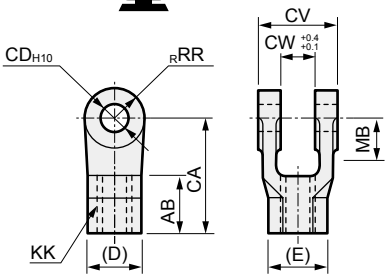

Model No.	Bore size (mm)	AB	CA	CD	CV	CW	D	E	KK	MB	RR	Weight (kg)
S1-Y-40	40	24	50	12	36	18	27	31.2	M14×1.5	19	16	0.25
S1-Y-50	50	24	50	12	36	18	27	31.2	M18×1.5	19	16	0.24
S1-Y-63	63	24	50	14	40	20	27	31.2	M18×1.5	19	16	0.26
S1-Y-80	80	35	70	20	56	28	41	47.3	M22×1.5	30	25	0.90
S1-Y-100	100	35	70	20	56	28	41	47.3	M26×1.5	30	25	0.85

*1: The MB dimension is the effective length of the CW dimension.
*2: A pin and a snap ring are attached.

● No. 2 bracket dimensions

Eye bracket (B1)

Material: Cast iron
Painting

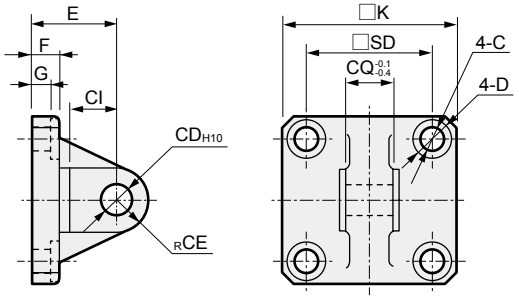

Model No.	Bore size (mm)	C	CD	CE	CI	CQ	D	E	F	G	K	SD	Weight (kg)
S1-B1-40	40	9	12	12	18	18	14	32	10	6.5	57	40.5	0.32
S1-B1-50	50	9	12	12	18	18	14	32	10	6.5	66	48	0.38
S1-B1-63	63	9	14	16	24	20	14	37	10	6.5	80	59	0.57
S1-B1-80	80	14	20	20	30	28	20	52	14	10.5	98	74	1.27
S1-B1-100	100	14	20	20	30	28	20	52	16	10.5	118	90	1.64

Clevis bracket (B2)

Material: Cast iron
Painting

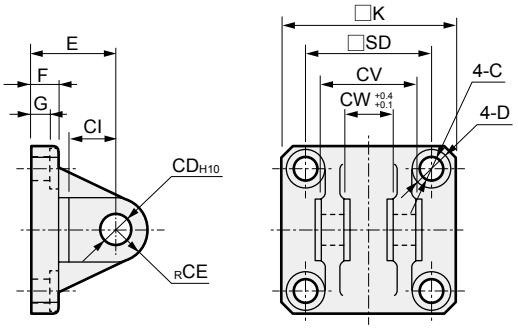

Model No.	Bore size (mm)	C	CD	CE	CI	CV	CW	D	E	F	G	K	SD	Wt (kg)
S1-B2-40	40	9	12	12	18	36	18	14	32	10	6.5	57	40.5	0.36
S1-B2-50	50	9	12	12	18	36	18	14	32	10	6.5	66	48	0.41
S1-B2-63	63	9	14	16	24	40	20	14	37	10	6.5	80	59	0.62
S1-B2-80	80	14	20	20	30	56	28	20	52	14	10.5	98	74	1.48
S1-B2-100	100	14	20	20	30	56	28	20	52	16	10.5	118	90	1.82

Note: A pin and a snap ring are attached.

Eye bracket (B3)

Material: Cast iron
Painting

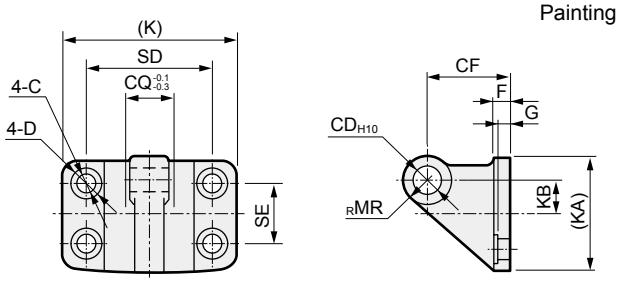

Model No.	Applicable bore size (mm)	C	CD	CF	CQ	D	F	G	K	KA	KB	MR	SD	SE	Weight (kg)
S1-B3-40	ø40/ø50	9	12	40	18	14	8	6.5	85	57	17.5	12	65	35	0.44
S1-B3-63	ø63	11	14	50	20	17	10	8	105	67	20	16	80	40	0.77
S1-B3-80	ø80/ø100	14	20	65	28	20	12	10	130	93	30	20	100	60	1.64

JSC3 Series common accessory dimensions (No. 2 bracket/pin/bellows/indicator) ø40 to ø100

● Trunnion No. 2 bracket dimensions

Material: Cast iron
Painting

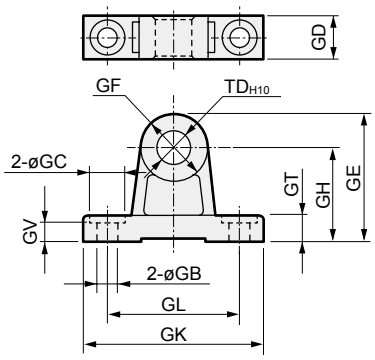

Code / Model No.	GB	GC	GD	GE	GF	GH	GK	GL	GT	GV	TD	Weight (kg)
S1-B4-40	9	17	19	61	32	45	80	60	12	11	16	0.25
S1-B4-50	9	17	19	63	36	45	85	65	12	11	18	0.28
S1-B4-63	11	22	24	80	40	60	100	75	14	13	20	0.52
S1-B4-80	14	24	26	85	50	60	115	85	14	13	25	0.70
S1-B4-100	14	24	35	107	64	75	130	100	17	16	35	1.48

Note: The bracket is provided as 2 pcs./set.

● Pin dimensions

Pin (P)

Material: Carbon steel
Zinc chromate treatment

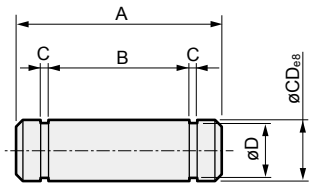

Model No.	Applicable bore size (mm)	A	B	C	D	CD	Applicable snap ring	Weight (kg)
S1-P-40	40, 50	43.5	36.2	1.15	11.5	12	C type for shaft 12	0.04
S1-P-63	63	47.5	40.2	1.15	13.4	14	C type for shaft 14	0.06
S1-P-80	80, 100	64	56.2	1.35	19	20	C type for shaft 20	0.16

● Indicator

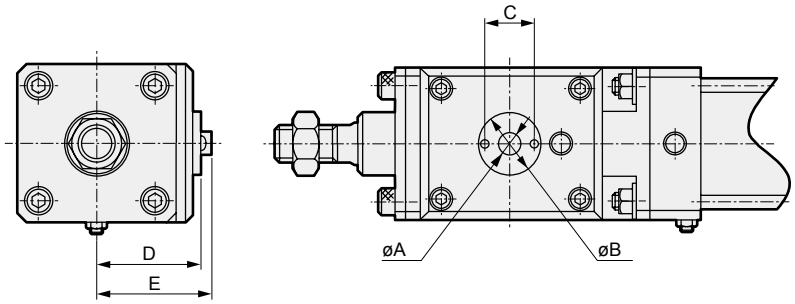

Code / Bore size (mm)	A	B	C	D	E
ø40	8	25	18	51	51 to 59
ø50	8	25	18	55.5	55.5 to 63.5
ø63	10	32	24	59	59 to 68
ø80	12	32	24	69	69 to 80
ø100	14	32	24	78	78 to 90

● The operational status of the brake is easily detectable from outside.

LCM
LCR
LCG
LCW
LCX
STM
STG
STS/STL
STR2
UCA2
ULK*
JSK/M2
JSG
JSC3/JSC4
USSD
UFCD
USC
UB
JSB3
LMB
LML
HCM
HCA
LBC
CAC4
UCAC2
CAC-N
UCAC-N
RCS2
RCC2
PCC
SHC
MCP
GLC
MFC
BBS
RRC
GRC
RV3*
NHS
HRL
LN
Hand
Chuk
MecHnd/Chuk
ShkAbs
FJ
FK
SpdContr
Ending

JSC4 Series common accessory dimensions (rod eye, bracket, pin) ø125 to ø180

● Rod eye for JSC4 (I)

Material: Cast iron
Painting

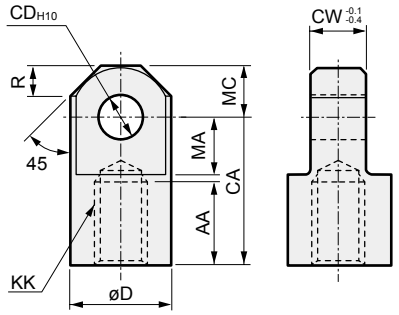

Code / Model No.	AA	CA	CD	CW	D	KK	MA	MC	R	Weight (kg)
SCS2-125-I	50	85	25	32	55	M30×1.5	32	27.5	15.5	1.25
SCS2-140-I	50	90	28	36	60	M30×1.5	35	30	18	1.65
SCS2-160-I	60	105	32	40	70	M36×1.5	40	35	21	2.55
SCS2-180-I	65	115	40	50	85	M40×1.5	47.5	42.5	29	4.20

● Rod clevis for JSC4 (Y)

Material: Cast iron
Painting

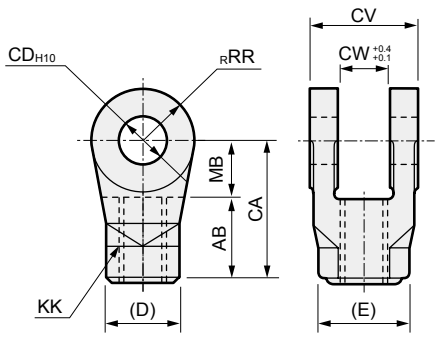

Code / Model No.	AB	CA	CD	CV	CW	D	E	KK	MB	RR	Weight (kg)
SCS2-125-Y	50	85	25	64	32	46	53.1	M30×1.5	35	27.5	1.30
SCS2-140-Y	50	90	28	72	36	46	53.1	M30×1.5	40	30	1.65
SCS2-160-Y	60	105	32	80	40	55	63.5	M36×1.5	45	35	2.55
SCS2-180-Y	65	115	40	100	50	60	69.3	M40×1.5	50	42.5	4.40

Note: A pin and a snap ring are attached.

● Eye bracket for JSC4 (B1)

Material: Cast iron
Painting

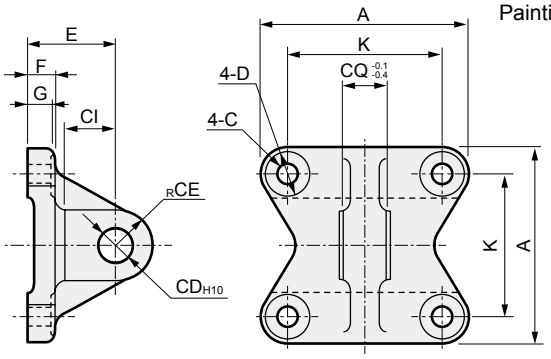

Code / Model No.	A	C	CD	CE	CI	CQ	D	E	F	G	K	Weight (kg)
SCS2-125-B1	140	16	25	25	35	32	23	63	20	18	110	2.35
SCS2-140-B1	154	16	28	28	40	36	23	75	22	20	124	3.30
SCS2-160-B1	174	18	32	32	40	40	26	75	24	22	142	4.65
SCS2-180-B1	196	20	40	40	55	50	29	90	25	23	160	6.75

● Pin (P)

Material: Carbon steel
Zinc chromate treatment

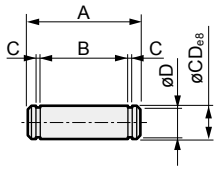

Code / Model No.	A	B	C	CD	D	Applicable snap ring	Weight (kg)	Compatibility
SCS2-125-P	75	66.3	1.35	25	23.9	C for shaft 25	0.25	JSC3-125
SCS2-140-P	84	74.7	1.65	28	26.6	C for shaft 28	0.40	JSC3-140
SCS2-160-P	92	82.7	1.65	32	30.3	C for shaft 32	0.50	JSC3-160
SCS2-180-P	115	103.2	1.9	40	38	C for shaft 40	1.15	JSC3-180

● Clevis bracket for JSC4 (B2)

Material: Cast iron
Painting

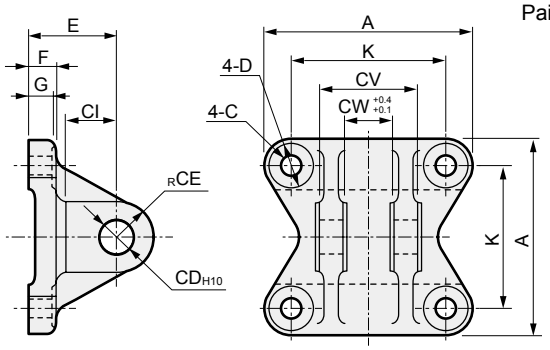

Code / Model No.	A	C	CD	CE	CI	CV	CW	D	E	F	G	K	Weight (kg)
SCS2-125-B2	140	16	25	25	35	64	32	23	63	20	18	110	2.65
SCS2-140-B2	154	16	28	28	40	72	36	23	75	22	20	124	3.85
SCS2-160-B2	174	18	32	32	40	80	40	26	75	24	22	142	5.45
SCS2-180-B2	196	20	40	40	55	100	50	29	90	25	23	160	8.70

Note: A pin and a snap ring are attached.

MEMO

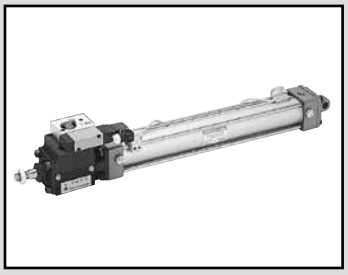

Brake cylinder Double acting/with valve for brake

JSC3-V Series

● Bore size: ø40/ø50/ø63/ø80/ø100

JIS symbol

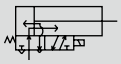

RoHS CAD

Specifications

Item		JSC3-V (with switch)					JSC3-SV (with switch)				
Bore size mm		ø40	ø50	ø63	ø80	ø100	ø40	ø50	ø63	ø80	ø100
Actuation		Double acting/with valve for brake					Double acting/low pressure release/with valve for brake				
Working fluid		Compressed air									
Max. working pressure MPa		0.7 (≈100 psi, 7 bar)									
Min. working pressure MPa	Brake section	0.3 (≈44 psi, 3 bar)					0.25 (≈36 psi, 2.5 bar)				
	Cylinder	0.1 (≈15 psi, 1 bar)									
Proof pressure MPa		1.6 (≈230 psi, 16 bar)									
Ambient temperature °C		-5 (23°F) to 50 (122°F) (no freezing)									
Port size	Brake section	Rc1/8		Rc1/4		Rc3/8	Rc1/8		Rc1/4		Rc3/8
	Cylinder	Rc1/4	Rc3/8		Rc1/2		Rc1/4	Rc3/8		Rc1/2	
Stroke tolerance mm		$^{+0.9}_{0}$ (to 360), $^{+1.4}_{0}$ (to 1000)									
Working piston speed mm/s		50 to 1000 (Operate within the allowable absorbed energy.)									
Cushion		Air cushion									
Effective air cushion length mm		14.6	16.6	16.6	20.6	23.6	14.6	16.6	16.6	20.6	23.6
Lubrication		Not required (use turbine oil class 1 ISO VG32 if necessary for lubrication)									
Holding force N		980	1569	2451	3922	6178	784	1255	1961	3138	4941
Allowable absorbed energy J	Cushioned	4.29	8.37	15.8	27.9	49.8	4.29	8.37	15.8	27.9	49.8
	Without cushion	0.067	0.079	0.079	0.201	0.301	0.067	0.079	0.079	0.201	0.301
		Note: Without any cushion, this product cannot absorb large energy generated by an external load. We recommend using an external shock absorber.									

Note: The valve specifications are the same as those of the standard model “4KB2”. For details, refer to “Pneumatic Valves (CB-023SA)”.

Stroke length

Bore size (mm)	Standard stroke length (mm)	Max. stroke length (mm)	Available stroke length (mm)	Min. stroke length (mm)
ø40	50, 75, 100, 150, 200, 250 300, 350, 400, 450, 500	600	1000	1
ø50			2000	
ø63			2500	
ø80		700		
ø100		800	*2	

*1 : The min. stroke length varies depending on switch mounting method. Refer to the following table.
The custom stroke length is available in 1 mm increments.
*2 : The max. stroke length available for ø63 to ø100 bore size models with bellows is 2000 mm.

Min. stroke length with switch (T switch)

● Min. stroke length with T0/T5 switches

Switch quantity	Different surface mounting				Same surface mounting				Center trunnion mounting				Rod side trunnion mounting No position detection at rod side stroke end.	Head side trunnion mounting No position detection at head side stroke end
Bore size	1	2	3	4	1	2	3	4	1	2	3	4	1	1
ø40	20(10)	20(20)	40(40)	60(60)	20(10)	60(45)	105(75)	150(105)	110(110)	110(110)	175(145)	175(145)	50(50)	50(50)
ø50	15(10)	20(20)	40(40)	60(60)	15(10)	20(20)	65(50)	65(60)	135(135)	135(135)	135(135)	135(135)	60(60)	60(60)
ø63	15(10)	20(20)	40(40)	60(60)	15(10)	20(20)	70(55)	70(60)	110(95)	110(95)	110(100)	110(100)	50(45)	50(45)
ø80	15(15)	25(25)	45(45)	65(65)	15(15)	25(25)	70(55)	70(65)	115(85)	115(85)	115(105)	115(105)	55(40)	55(40)
ø100	15(15)	25(25)	45(45)	70(70)	15(15)	25(25)	70(55)	70(70)	125(95)	125(95)	125(115)	125(115)	60(45)	60(45)

*1 : The values in ( ) are of T*V (radial lead wire).
*2 : When the stroke length is 15 mm or less, the two switches could turn ON at the same time. In this case, adjust switch mounting positions to be as far apart as possible.

LCM
LCR
LCG
LCW
LCX
STM
STG
STS/STL
STR2
UCA2
ULK*
JSK/M2
JSG
JSC3/JSC4
USSD
UFCD
USC
UB
JSB3
LMB
LML
HCM
HCA
LBC
CAC4
UCAC2
CAC-N
UCAC-N
RCS2
RCC2
PCC
SHC
MCP
GLC
MFC
BBS
RRC
GRC
RV3*
NHS
HRL
LN
Hand
Chuk
MecHnd/Chuk
ShkAbs
FJ
FK
SpdContr
Ending

Min. stroke length with switch (T switch)

● Min. stroke length with T8 switch

Switch quantity	Different surface mounting				Same surface mounting				Center trunnion mounting				Rod side trunnion mounting No position detection at rod side stroke end.	Head side trunnion mounting No position detection at head side stroke end.
Bore size	1	2	3	4	1	2	3	4	1	2	3	4	1	1
ø40	15(10)	20(20)	40(40)	60(60)	15(10)	50(35)	95(65)	140(95)	95(85)	95(85)	155(125)	155(125)	45(40)	45(40)
ø50	10(10)	20(20)	40(40)	60(60)	10(10)	20(20)	70(55)	70(60)	115(115)	115(115)	135(135)	135(135)	50(50)	50(50)
ø63	10(10)	20(20)	40(40)	60(60)	10(10)	20(20)	70(55)	70(60)	95(75)	95(75)	110(110)	110(110)	45(35)	45(35)
ø80	15(15)	25(25)	45(45)	65(65)	15(15)	25(25)	70(55)	70(65)	100(70)	100(70)	115(115)	115(115)	50(35)	50(35)
ø100	15(15)	25(25)	45(45)	65(65)	15(15)	25(25)	70(55)	70(65)	110(80)	110(80)	125(125)	125(125)	55(40)	55(40)

*1: The values in ( ) are of T*V (radial lead wire).
*2: When the stroke length is 15 mm or less, the two switches could turn ON at the same time. In this case, adjust switch mounting positions to be as far apart as possible.

● Min. stroke length with T2/T3 witches

Switch quantity	Different surface mounting				Same surface mounting				Center trunnion mounting				Rod side trunnion mounting No position detection at rod side stroke end.	Head side trunnion mounting No position detection at head side stroke end.
Bore size	1	2	3	4	1	2	3	4	1	2	3	4	1	1
ø40	20(10)	20(15)	25(25)	40(40)	20(10)	60(45)	105(75)	150(105)	105(75)	105(75)	165(135)	165(135)	50(35)	50(35)
ø50	15(10)	15(15)	25(25)	40(40)	15(10)	15(15)	60(45)	60(45)	105(75)	105(75)	105(75)	105(75)	45(30)	45(30)
ø63	15(10)	15(15)	25(25)	40(40)	15(10)	15(15)	60(45)	60(45)	110(80)	110(80)	110(85)	110(85)	50(35)	50(35)
ø80	15(10)	15(15)	30(30)	45(45)	15(10)	15(15)	60(45)	60(45)	115(85)	115(85)	115(90)	115(90)	55(40)	55(40)
ø100	10(10)	15(15)	30(30)	45(45)	10(10)	15(15)	60(45)	60(45)	125(95)	125(95)	125(100)	125(100)	60(45)	60(45)

*1: The values in ( ) are of T*V (radial lead wire).
*2: When the stroke length is 15 mm or less, the two switches could turn ON at the same time. In this case, adjust switch mounting positions to be as far apart as possible.

● Min. stroke length with T1/T2Y/T3Y/T2YD switches

Switch quantity	Different surface mounting				Same surface mounting				Center trunnion mounting				Rod side trunnion mounting No position detection at rod side stroke end.	Head side trunnion mounting No position detection at head side stroke end.
Bore size	1	2	3	4	1	2	3	4	1	2	3	4	1	1
ø40	20(10)	20(15)	25(25)	40(40)	20(10)	60(45)	105(75)	150(105)	105(75)	105(75)	165(135)	165(135)	50(35)	50(35)
ø50	15(10)	15(15)	25(25)	40(40)	15(10)	15(15)	60(45)	60(45)	100(70)	100(70)	100(75)	100(75)	45(30)	45(30)
ø63	15(10)	15(15)	25(25)	40(40)	15(10)	15(15)	60(45)	60(45)	105(75)	105(75)	105(85)	105(85)	50(35)	50(35)
ø80	15(10)	15(15)	30(30)	45(45)	15(10)	15(15)	60(45)	60(45)	110(80)	110(80)	110(90)	110(90)	55(40)	55(40)
ø100	10(10)	15(15)	30(30)	45(45)	10(10)	15(15)	60(45)	60(45)	120(90)	120(90)	120(100)	120(100)	60(45)	60(45)

*1: The values in ( ) are of T*V (radial lead wire). T2YD does not have a radial lead wire (V).
*2: When the stroke length is 15 mm or less, the two switches could turn ON at the same time. In this case, adjust switch mounting positions to be as far apart as possible.

● Min. stroke length with T2W/T3W switches

	Different surface mounting				Same surface mounting				Center trunnion mounting				Rod side trunnion mounting No position detection at rod side stroke end.	Head side trunnion mounting No position detection at head side stroke end.
Switch quantity	1	2	3	4	1	2	3	4	1	2	3	4	1	1
ø40	20(5)	20(10)	20(15)	25(25)	20(5)	65(50)	110(80)	155(110)	110(80)	110(80)	170(140)	170(140)	50(35)	50(35)
ø50	20(5)	20(10)	20(15)	20(20)	20(5)	20(10)	65(40)	65(40)	110(80)	110(80)	110(60)	110(60)	50(35)	50(35)
ø63	20(5)	20(10)	20(15)	25(25)	20(5)	20(10)	65(40)	65(40)	115(85)	115(85)	115(65)	115(65)	55(40)	55(40)
ø80	15(5)	15(10)	15(15)	25(25)	15(5)	15(10)	60(40)	60(40)	120(90)	120(90)	120(70)	120(70)	55(40)	55(40)
ø100	10(5)	10(10)	20(20)	25(25)	10(5)	10(10)	60(40)	60(40)	130(100)	130(100)	130(85)	130(85)	60(45)	60(45)

*1: The values in ( ) are of T*V (radial lead wire).
*2: When the stroke length is 15 mm or less, the two switches could turn ON at the same time. In this case, adjust switch mounting positions to be as far apart as possible.

LCM
LCR
LCG
LCW
LCX
STM
STG
STS/STL
STR2
UCA2
ULK*
JSK/M2
JSG
JSC3/JSC4
USSD
UFCD
USC
UB
JSB3
LMB
LML
HCM
HCA
LBC
CAC4
UCAC2
CAC-N
UCAC-N
RCS2
RCC2
PCC
SHC
MCP
GLC
MFC
BBS
RRC
GRC
RV3*
NHS
HRL
LN
Hand
Chuk
MecHnd/Chuk
ShkAbs
FJ
FK
SpdContr
Ending

Switch specifications (T type switch)

● 1-color/2-color display/for AC magnetic field proof

Item	Proximity 2-wire	Proximity 2-wire			Proximity 3-wire				Reed 2-wire							Proximity 2-wire
	T1H/ T1V	T2H/T2V/ T2JH/T2JV	T2YH/ T2YV	T2WH/ T2WV	T3H/ T3V	T3PH/ T3PV	T3YH/ T3YV	T3WH/ T3WV	T0H/T0V		T5H/T5V		T8H/T8V			T2YD(*4) T2YDT
Applications	For programmable controller, relay, compact solenoid valve	Dedicated for programmable controller			For programmable controller, relay				For programmable controller, relay		For programmable controller, relay, IC circuit (no indicator lamp), serial connection		For programmable controller, relay			For programmable controller
Output method	-				NPN output	PNP output	NPN output	NPN output	-							
Pwr. supp. V.	-				10 to 28 VDC				-							
Load voltage	85 to 265 VAC	10 to 30 VDC		24 VDC ±10%	30 VDC or less				12/24 VDC	110 VAC	5/12/24 VDC	110 VAC	12/24 VDC	110 VAC	220 VAC	24 VDC ±10%
Load current	5 to 100 mA	5 to 20 mA (*3)			100 mA or less		50 mA or less		5 to 50 mA	7 to 20 mA	≤50 mA	≤20 mA	5 to 50 mA	7 to 20 mA	7 to 10 mA	5 to 20 mA
Indicator lamp	LED (Lit when ON)	LED (Lit when ON)	Red/green LED (Lit when ON)	Red/green LED (Lit when ON)	LED (Lit when ON)	Yellow LED (Lit when ON)	Red/green LED (Lit when ON)	Red/green LED (Lit when ON)	LED (Lit when ON)		Without indicator lamp		LED (Lit when ON)			Red/green LED (Lit when ON)
Leakage current	≤ 1 mA at 100 VAC, ≤ 2 mA at 200 VAC	1 mA or less			10 μA or less				0 mA							1 mA or less
Weight g	1 m:33 3 m:87 5 m:142	1 m:18 3 m:49 5 m:80	1 m:33 3 m:87 5 m:142	1 m:18 3 m:49 5 m:80	1 m:18 3 m:49 5 m:80		1 m:33 3 m:87 5 m:142	1 m:18 3 m:49 5 m:80	1 m:18 3 m:49 5 m:80				1 m:33 3 m:87 5 m:142			1 m:61 3 m:166 5 m:272

*1 : Refer to Ending Page 1 for detailed switch specifications and dimensions.
*2 : Switches other than the above models, such as switches with connectors, are also available. Refer to Ending Page 1.
*3 : The max. load current is 20 mA at 25°C. The current is lower than 20 mA if the operating ambient temperature around the switch is higher than 25˚C. (5 to 10 mA at 60°C)
*4 : AC magnetic field proof switch (T2YD/T2YDT) cannot be used in DC magnetic fields.

Switch specifications (H type switch)

● Reed switch

Item	Reed 2-wire		
	H0		H0Y (2-color display)
Applications	For relay, programmable controller		Dedicated for programmable controller
Load voltage/ current	12/24 VDC 5 to 50 mA	110 VAC 7 to 20 mA	24 VDC, 5 to 20 mA (*2)
Indicator lamp	Green LED (Lit when ON)		Red/green LED (Lit when ON)
Leakage current	10 μA or less		
Weight g	1 m:76 3 m:181 5 m:289		

*1 : Refer to Ending Page 1 for other switch specifications.
*2 : Max. load current is applied at 25°C. The current is lower than 20 mA if the operating ambient temperature around the switch is higher than 25˚C. (5 to 10 mA at 60°C)

LCM
LCR
LCG
LCW
LCX
STM
STG
STS/STL
STR2
UCA2
ULK*
JSK/M2
JSG
JSC3/JSC4
USSD
UFCD
USC
UB
JSB3
LMB
LML
HCM
HCA
LBC
CAC4
UCAC2
CAC-N
UCAC-N
RCS2
RCC2
PCC
SHC
MCP
GLC
MFC
BBS
RRC
GRC
RV3*
NHS
HRL
LN
Hand
Chuk
MecHnd/Chuk
ShkAbs
FJ
FK
SpdContr
Ending

Electrical specification for brake valve

Item	4KB2		
Rated voltage (V)	100 AC(50/60 Hz)	200 AC(50/60 Hz)	24 DC
Starting current (A)	0.056/0.044	0.028/0.022	0.075
Holding current (A)	0.028/0.022	0.014/0.011	0.075
Power consumption (W)	1.8/1.4		1.8
Thermal class	Class B (molded coil)		

*1 : 100/200 VAC coil is available for 110/220 VAC (60 Hz).
*2 : The valve specifications are the same as those of the standard model 4KB2. For details, refer to “Pneumatic Valves (CB-023SA)”.

Cylinder weight

[Unit: kg]

Item/mounting	Product weight when stroke length (S) = 0 mm						Switch weight	Mounting bracket weight		Additional weight per S = 100 mm	Valve weight
Bore size (mm)	Basic (00)	Foot (LB)	Flange (FA, FB)	Eye bracket (CA)	Clevis bracket (CB)	Trunnion (TC)		T type	H type		
ø40	2.48	2.66	2.91	2.83	2.83	2.86	Refer to the weight in the switch specifications.	0.024	0.028	0.39	0.32
ø50	3.47	3.67	3.97	3.87	3.87	3.97		0.022	0.026	0.46	
ø63	5.09	5.49	6.19	5.79	5.79	5.89		0.020	0.024	0.50	0.35
ø80	8.15	8.85	9.95	9.65	9.65	9.45		0.026	0.029	0.90	
ø100	14.70	15.70	17.40	16.90	16.90	17.30		0.024	0.028	1.12	0.49

(Example) Product weight of JSC3-V-LB-50B-200-T0H-D

Product weight for stroke length 0 mm … 3.67 kg
Additional weight for stroke length 200 mm … $0.46 \times \frac{200}{100} = 0.92$ kg
Weight of 2 TOH switches …… 0.018×2=0.036 kg
Weight of 2 mounting brackets …… 0.022×2=0.044 kg
Valve weight …… 0.32 kg
Product weight …… 3.67+0.92+0.036+0.044+0.32=4.990 kg

Theoretical thrust table

(Unit: N)

Bore size (mm)	Operating direction	Working pressure MPa							
		0.1	0.15	0.2	0.3	0.4	0.5	0.6	0.7
ø40	Push	1.26×10^2	1.88×10^2	2.51×10^2	3.77×10^2	5.03×10^2	6.28×10^2	7.54×10^2	8.80×10^2
	Pull	1.06×10^2	1.58×10^2	2.11×10^2	3.17×10^2	4.22×10^2	5.28×10^2	6.33×10^2	7.39×10^2
ø50	Push	1.96×10^2	2.95×10^2	3.93×10^2	5.89×10^2	7.85×10^2	9.82×10^2	1.18×10^3	1.37×10^3
	Pull	1.65×10^2	2.47×10^2	3.30×10^2	4.95×10^2	6.60×10^2	8.25×10^2	9.90×10^2	1.15×10^3
ø63	Push	3.12×10^2	4.68×10^2	6.23×10^2	9.35×10^2	1.25×10^3	1.56×10^3	1.87×10^3	2.18×10^3
	Pull	2.80×10^2	4.20×10^2	5.61×10^2	8.41×10^2	1.12×10^3	1.40×10^3	1.68×10^3	1.96×10^3
ø80	Push	5.03×10^2	7.54×10^2	1.01×10^3	1.51×10^3	2.01×10^3	2.51×10^3	3.02×10^3	3.52×10^3
	Pull	4.54×10^2	6.80×10^2	9.07×10^2	1.36×10^3	1.81×10^3	2.27×10^3	2.72×10^3	3.17×10^3
ø100	Push	7.85×10^2	1.18×10^3	1.57×10^3	2.36×10^3	3.14×10^3	3.93×10^3	4.71×10^3	5.50×10^3
	Pull	7.15×10^2	1.07×10^3	1.43×10^3	2.14×10^3	2.86×10^3	3.57×10^3	4.29×10^3	5.00×10^3

LCM
LCR
LCG
LCW
LCX
STM
STG
STS/STL
STR2
UCA2
ULK*
JSK/M2
JSG
JSC3/JSC4
USSD
UFCD
USC
UB
JSB3
LMB
LML
HCM
HCA
LBC
CAC4
UCAC2
CAC-N
UCAC-N
RCS2
RCC2
PCC
SHC
MCP
GLC
MFC
BBS
RRC
GRC
RV3*
NHS
HRL
LN
Hand
Chuk
MecHnd/Chuk
ShkAbs
FJ
FK
SpdContr
Ending

How to order

Without switch (built-in magnet for switch)

JSC3 - ◯ V — LB - 40 ◯ B - 50 - 1 ———— S I

With switch (built-in magnet for switch)

JSC3 - ◯ V — LB - 40 ◯ B - 50 - 1 - T0H - R - S I

With strong magnetic field proof (for H0, H0Y switches) switch (built-in magnet for switch)

JSC3 - ◯ VL2 - LB - 40 ◯ B - 50 - 1 - H0 - R - S I

- Model No.
- A Brake release pressure
- B Mounting *1
- C Bore size
- D Port thread
- E Cushion
- F Stroke length *2 *3 *4
- G Valve voltage
- H Switch model No. *5 — * indicates the lead wire length.
- I Switch quantity *6
- J Option *7
- K Accessory *8

Code	Description
A Brake release pressure	
Blank	Standard (0.3 MPa)
S	Low pressure release (0.25 MPa)
B Mounting	
00	Basic
LB	Axial foot
FA	Rod side flange
FB	Head side flange
FC	Head side special flange
CA	Eye bracket
CB	Clevis bracket (pin and snap ring attached)
TC	Intermediate trunnion
TA	Rod side trunnion
TB	Head side trunnion
C Bore size (mm)	
40	ø40
50	ø50
63	ø63
80	ø80
100	ø100
D Port thread	
Blank	Rc thread
N	NPT thread (made-to-order product)
G	G thread (made-to-order product)
E Cushion	
B	Both sides cushioned
R	Rod side cushioned
H	Head side cushioned
N	Without cushion

F Stroke length (mm)

Bore size	Stroke length *4	Available stroke length	Custom stroke length
ø40	**1 to 600**	**1000**	**In 1 mm increments**
ø50	**1 to 600**	**2000**	
ø63	**1 to 600**	**2500**	
ø80	**1 to 700**	**2500**	
ø100	**1 to 800**	**2500**	

G Valve voltage	
1	100 VAC
2	200 VAC
3	24 VDC
4	12 VDC
H Switch model No.	
Refer to the switch model numbers on the following page.	
*** Lead wire length**	
Blank	1 m (standard)
3	3 m (option)
5	5 m (option)
I Switch quantity	
R	1 on rod side
H	1 on head side
D	2
T	3
4	4 (when there are more than 4 switches, indicate switch quantity.)

J Option

		Max. ambient temperature	instantaneous max. temp
J	Bellows	100°C	200°C
L	Bellows	250°C	400°C
M	Piston rod material (stainless steel)		
Blank	Cushion needle position R (standard)		
S	Cushion needle position S		
T	Cushion needle position T		
G	With indicator		

K Accessory	
I	Rod eye
Y	Rod clevis (pin and snap ring attached)
B1	Eye bracket
B2	Clevis bracket (pin and snap ring attached)
B3	Eye bracket
B4	Trunnion No. 2 bracket (2 pcs./set)

⚠ Precautions for model selection

*1 : Mounting bracket will be shipped assembled with the product.
(Head side special flange is attached separately)

*2 : If the stroke exceeds the max. stroke length, refer to Ending Page 69.

*3 : The max. stroke length available for ø63 to ø100 bore size models with bellows is 2000 mm.

*4 : Refer to pages 810 and 811 for the min. stroke length with switch.

*5 : T2YD, T2YDT, H0, and H0Y are strong magnetic field proof switches.

*6 : When selecting TA or TB as mounting, the switch quantity is limited to "H" (1 on head side) for TA, and "R" (1 on rod side) for TB.

*7 : For S, T, and G position indications, check the respective dimensions.

*8 : "I" and "Y" cannot be selected together.

*9 : Refer to Ending Page 85 for custom specifications of rod end form.

[Example of model No.]

JSC3-V-LB-40B-50-1-T0H-R-SI

Model: Brake cylinder Double acting/with valve for brake

- A Brake release pressure: Standard 0.3 MPa
- B Mounting : Axial foot
- C Bore size : ø40 mm
- D Port thread : Rc thread
- E Cushion : Both sides cushioned
- F Stroke length : 50 mm
- G Valve voltage : 100 VAC
- H Switch model No. : Proximity switch T0H, lead wire 1 m
- I Switch quantity : 1 on rod side
- J Option : Cushion needle position S
- K Accessory : Rod eye

LCM
LCR
LCG
LCW
LCX
STM
STG
STS/STL
STR2
UCA2
ULK*
JSK/M2
JSG
JSC3/JSC4
USSD
UFCD
USC
UB
JSB3
LMB
LML
HCM
HCA
LBC
CAC4
UCAC2
CAC-N
UCAC-N
RCS2
RCC2
PCC
SHC
MCP
GLC
MFC
BBS
RRC
GRC
RV3*
NHS
HRL
LN
Hand
Chuk
MecHnd/Chuk
ShkAbs
FJ
FK
SpdContr
Ending

[H] Switch model No.

T type switch						
Axial lead wire	Radial lead wire	Contact	Voltage AC	Voltage DC	Display	Lead wire
TOH*	TOV*	Reed	●	●	1-color display	2-wire
T5H*	T5V*	Reed	●	●	Without indicator lamp	2-wire
T8H*	T8V*	Reed	●	●	1-color display	2-wire
T1H*	T1V*	Proximity	●		1-color display	2-wire
T2H*	T2V*	Proximity		●	1-color display	2-wire
T3H*	T3V*	Proximity		●	1-color display	3-wire
T2WH*	T2WV*	Proximity		●	2-color display	2-wire
T2YH*	T2YV*	Proximity		●	2-color display	2-wire
T3WH*	T3WV*	Proximity		●	2-color display	3-wire
T3YH*	T3YV*	Proximity		●	2-color display	3-wire
T3PH*	T3PV*	Proximity		●	1-color display	3-wire
T2YD*	-	Proximity		●	2-color display	2-wire
T2YDT*	-	Proximity		●	AC magnetic field	2-wire
T2JH*	T2JV*	Proximity		●	1-color display off-delay	2-wire
H type switch						
HO*	-	Reed	●	●	Strong magnetic field proof	2-wire
HOY*	-	Reed		●	Strong magnetic field 2-color display	2-wire

How to order brake unit

JSC3 - 40 - BRAKE-UNIT

40: Bore size (Item Ⓒ on page 814)

● Mounting FA

JSC3 - FA - 40 - BRAKE-UNIT

40: Bore size (Item Ⓒ on page 814)

How to order T type switch

● Switch body + mounting bracket set

JSC3 - T0H - 40

T0H: Switch model No. (Item Ⓗ)
40: Bore size (Item Ⓒ on page 814)

● Switch body only

SW - T0H

T0H: Switch model No. (Item Ⓗ)

● Mounting bracket set

JSC3 - TS - 40

TS: Mounting bracket
40: Bore size (Item Ⓒ on page 814)

How to order H type switch

● Switch body + mounting bracket set

JSC3-L2 - H0* - 40

H0*: Switch model No. (Item Ⓗ)
40: Bore size (Item Ⓒ on page 814)

● Switch body only

SW - H0*

H0*: Switch model No. (Item Ⓗ)

● Mounting bracket set

JSC3-L2 - H - 40

H: Mounting bracket
40: Bore size (Item Ⓒ on page 814)

How to order T2YD type switch

● Switch body + mounting bracket set

JSC3 - T2YD* - 40

T2YD*: Switch model No. (Item Ⓗ)
40: Bore size (Item Ⓒ on page 814)

● Switch body only

SW - T2YD*

T2YD*: Switch model No. (Item Ⓗ)

● Mounting bracket set

JSC3 - T - 40

T: Mounting bracket
40: Bore size (Item Ⓒ on page 814)

How to order mounting bracket

Bore size (mm) / Mounting bracket	ø40	ø50	ø63	ø80	ø100
Foot (LB) *1	JSC3-40-LB	JSC3-50-LB	JSC3-63-LB	JSC3-80-LB	JSC3-100-LB
Flange (FB)	JSC3-40-FB	JSC3-50-FB	JSC3-63-FB	JSC3-80-FB	JSC3-100-FB
Eye bracket (CA)	S1-CA-40	S1-CA-50	S1-CA-63	S1-CA-80	S1-CA-100
Clevis bracket (CB) *2	S1-CB-40	S1-CB-50	S1-CB-63	S1-CB-80	S1-CB-100

*1: The foot mounting bracket is provided as 2 pcs./set.
*2: A pin and a snap ring are attached.
*3: All mounting brackets have mounting bolts attached.

LCM
LCR
LCG
LCW
LCX
STM
STG
STS/STL
STR2
UCA2
ULK*
JSK/M2
JSG
JSC3/JSC4
USSD
UFCD
USC
UB
JSB3
LMB
LML
HCM
HCA
LBC
CAC4
UCAC2
CAC-N
UCAC-N
RCS2
RCC2
PCC
SHC
MCP
GLC
MFC
BBS
RRC
GRC
RV3*
NHS
HRL
LN
Hand
Chuk
MecHnd/Chuk
ShkAbs
FJ
FK
SpdContr
Ending

Dimensions (ø40 to ø63)

With valve for brake

● JSC3-V-40
-50

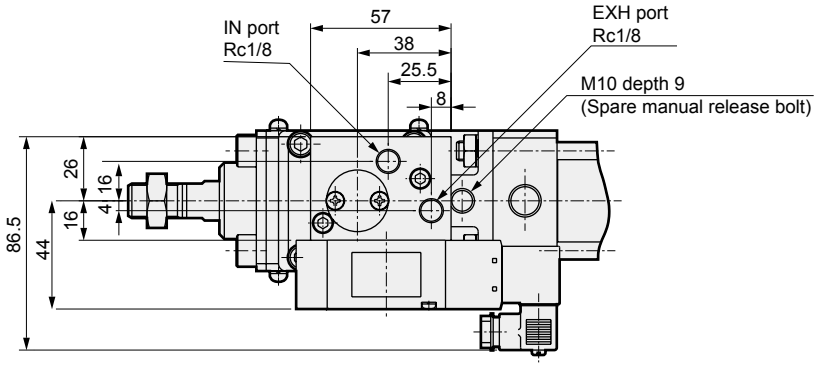

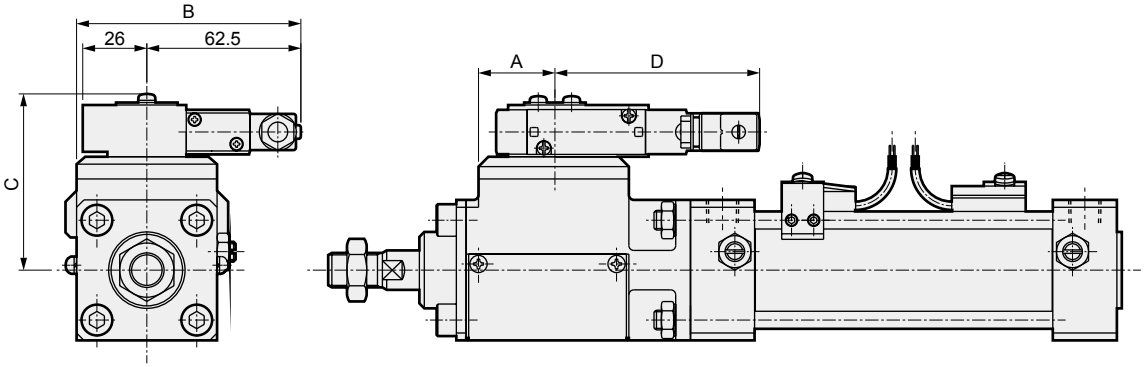

Code / Bore size (mm)	A	B	C	D
ø40	31	91	71.5	83.5
ø50	36	96.5	76	86.5

● Note: This model is the same as the standard, except for the dimensions above. Refer to page 784.

With valve for brake

● JSC3-V-63

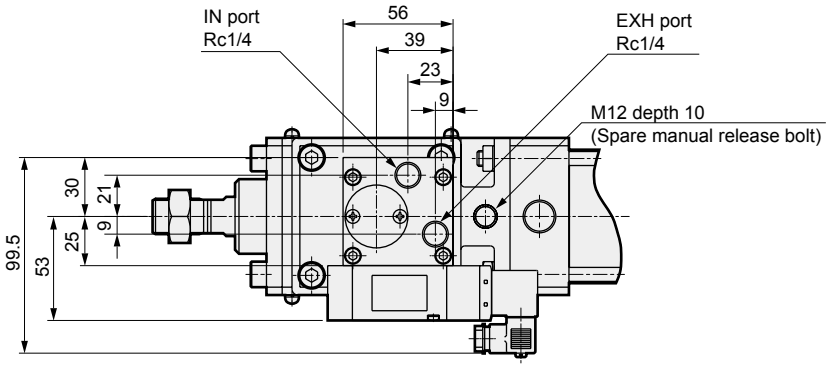

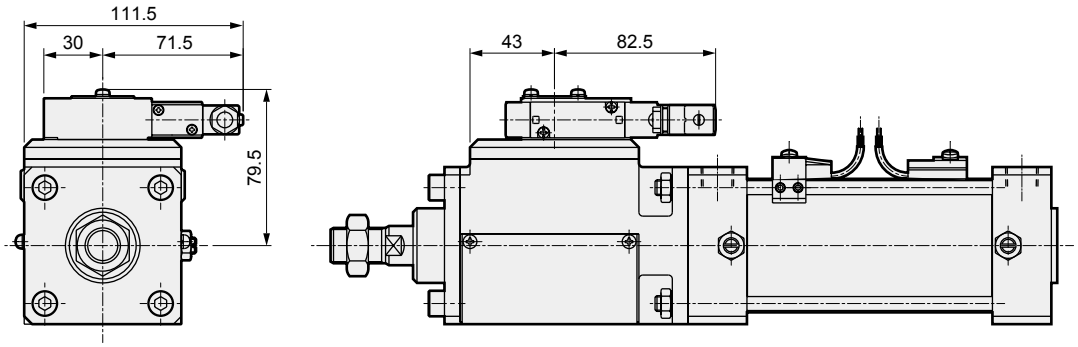

● Note: This model is the same as the standard, except for the dimensions above. Refer to page 784.

LCM
LCR
LCG
LCW
LCX
STM
STG
STS/STL
STR2
UCA2
ULK*
JSK/M2
JSG
JSC3/JSC4
USSD
UFCD
USC
UB
JSB3
LMB
LML
HCM
HCA
LBC
CAC4
UCAC2
CAC-N
UCAC-N
RCS2
RCC2
PCC
SHC
MCP
GLC
MFC
BBS
RRC
GRC
RV3*
NHS
HRL
LN
Hand
Chuk
MecHnd/Chuk
ShkAbs
FJ
FK
SpdContr
Ending

Dimensions (ø80, ø100)

With valve for brake

● JSC3-V-80

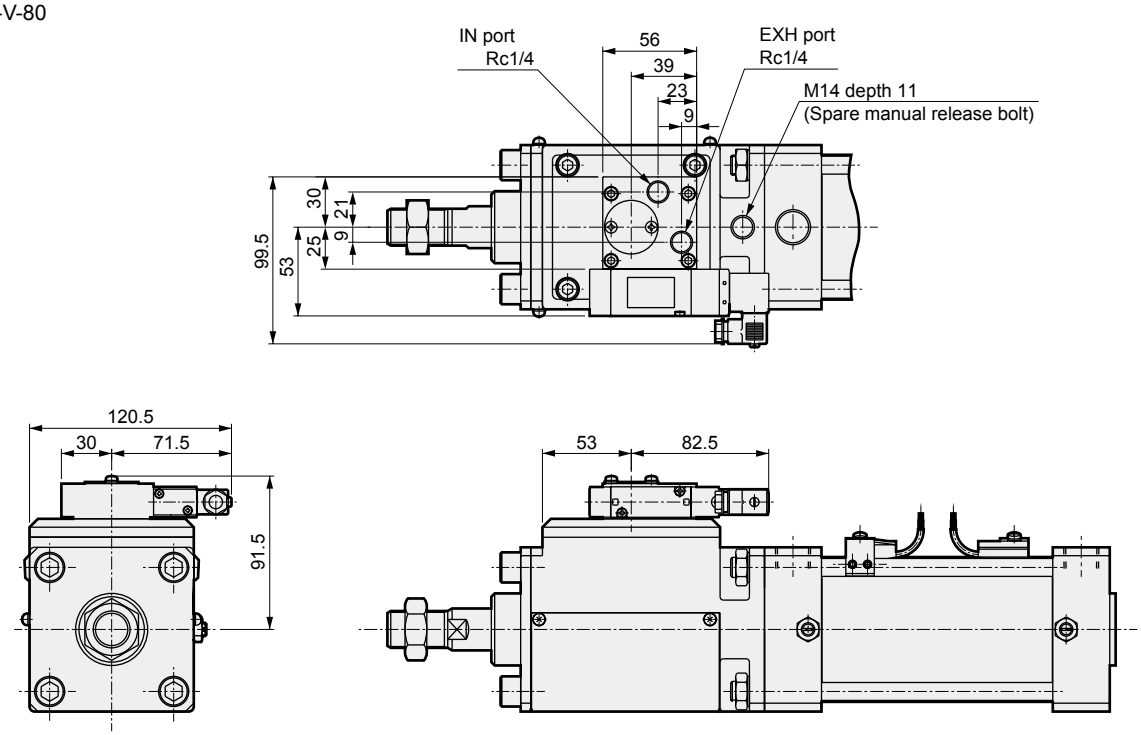

● Note: This model is the same as the standard, except for the dimensions above. Refer to page 784.

● JSC3-V-100

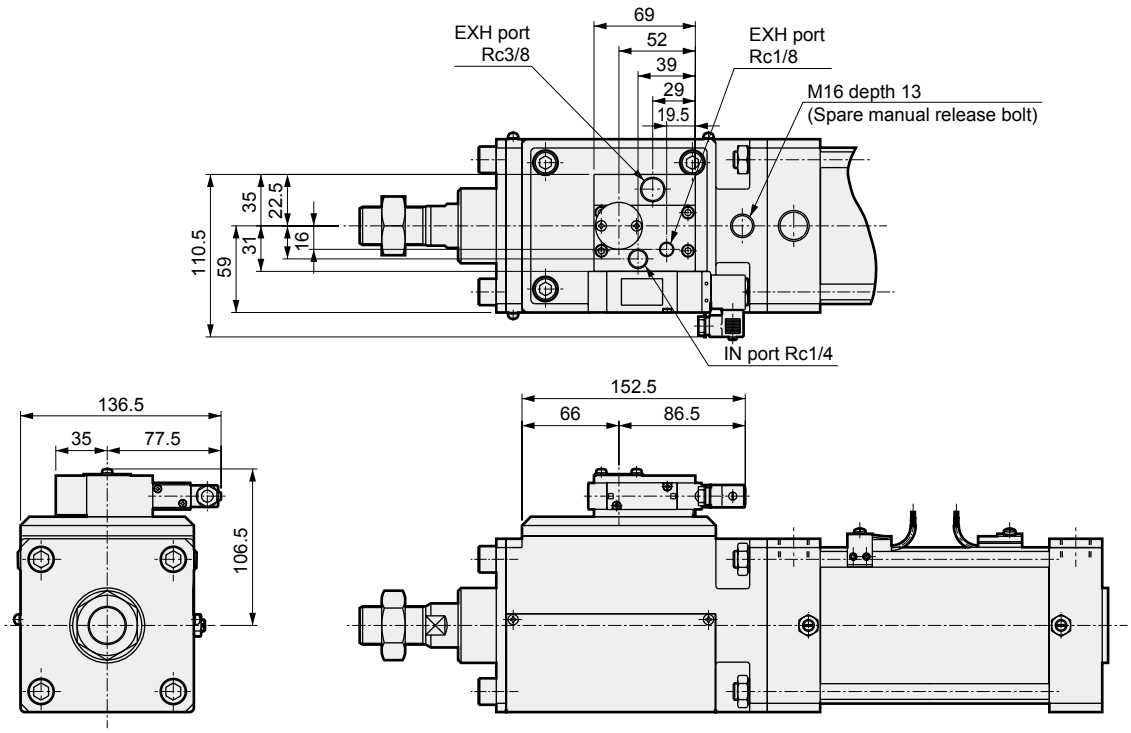

● Note: This model is the same as the standard, except for the dimensions above. Refer to page 784.

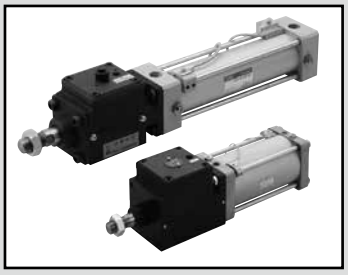

Brake cylinder Double acting/low hydraulic

JSC3-H/JSC4-H Series

● Bore size:
JSC3: ø40/ø50/ø63/ø80/ø100
JSC4: ø125/ø140/ø160/ø180

JIS symbol 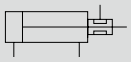

RoHS CAD

Specifications

Item		JSC3-H (with switch)					JSC3-SH (with switch)					JSC4-H			
Bore size mm		ø40	ø50	ø63	ø80	ø100	ø40	ø50	ø63	ø80	ø100	ø125	ø140	ø160	ø180
Actuation		Double acting/low hydraulic					Double acting/low pressure release/low hydraulic					Double acting/low hydraulic			
Working fluid		Hydraulic fluid (compressed air for brake section)													
Max. working pressure MPa		1.0 (≈150 psi, 10 bar)													
Min. working pressure MPa	Brake section	0.3 (≈44 psi, 3 bar)					0.25 (≈36 psi, 2.5 bar)					0.3 (≈44 psi, 3 bar)			
	Cylinder	0.2 (≈29 psi, 2 bar)					0.2 (≈29 psi, 2 bar)					0.1 (≈15 psi, 1 bar)			
Proof pressure MPa		1.6 (≈230 psi, 16 bar)													
Ambient temperature °C		5 (41°F) to 50 (122°F)													
Port size	Brake section	Rc1/8		Rc1/4		Rc3/8	Rc1/8		Rc1/4		Rc3/8	Rc1/2			
	Cylinder	Rc1/4	Rc3/8		Rc1/2		Rc1/4	Rc3/8		Rc1/2		Rc1/2	Rc3/4		
Stroke tolerance mm		$^{+0.9}_{0}$ (to 360), $^{+1.4}_{0}$ (to 1000)					$^{+0.9}_{0}$ (to 360), $^{+1.4}_{0}$ (to 1000)					$^{+1.0}_{0}$ (to 300), $^{+1.4}_{0}$ (to 1000), $^{+1.8}_{0}$ (to 2000)			
Cushion		Air cushion										Cushioned			
Effective air cushion length mm		14.6	16.6		20.6	23.6	14.6	16.6		20.6	23.6	21.6			
Holding force N		980	1569	2451	3922	6178	784	1255	1961	3138	4941	9600	12000	15800	20000
Allowable absorbed energy J	Cushioned	Note: The cushioning of the low hydraulic cylinder cannot absorb large energy. We recommend using an external shock absorber.													
	Without cushion	Note: Without any cushion, this product cannot absorb large energy generated by an external load. We recommend using an external shock absorber.													

Note: Brake section is air operated.

Stroke length

Bore size (mm)		Standard stroke length (mm)	Max. stroke length (mm)	Available stroke length (mm)	Min. stroke length (mm)
JSC3	ø40	50, 75, 100, 150, 200, 250 , 300, 350, 400, 450, 500	600	1600	1
	ø50			2000	
	ø63			2500 *3	
	ø80		700		
	ø100		800		
JSC4	ø125	50, 75, 100, 150, 200, 250 , 300		2000	
	ø140				
	ø160				
	ø180		900		

*1 : If max. stroke length is exceeded, product specifications may not be met, depending on conditions. Refer to Ending Page 69.
*2 : The custom stroke length is available in 1 mm increments.
*3 : The max. stroke length available for ø63 to ø100 bore size models with bellows is 2000 mm.

Min. stroke length with JSC3 switch (T switch)

● Min.stroke length with T0/T5 switches

Switch quantity	Different surface mounting				Same surface mounting				Center trunnion mounting				Rod side trunnion mounting No position detection at rod side stroke end.	Head side trunnion mounting No position detection at head side stroke end.
Bore size	1	2	3	4	1	2	3	4	1	2	3	4	1	1
ø40	20(10)	20(20)	40(40)	60(60)	20(10)	60(45)	105(75)	150(105)	110(110)	110(110)	175(145)	175(145)	50(50)	50(50)
ø50	15(10)	20(20)	40(40)	60(60)	15(10)	20(20)	65(50)	65(60)	135(135)	135(135)	135(135)	135(135)	60(60)	60(60)
ø63	15(10)	20(20)	40(40)	60(60)	15(10)	20(20)	70(55)	70(60)	110(95)	110(95)	110(100)	110(100)	50(45)	50(45)
ø80	15(15)	25(25)	45(45)	65(65)	15(15)	25(25)	70(55)	70(65)	115(85)	115(85)	115(105)	115(105)	55(40)	55(40)
ø100	15(15)	25(25)	45(45)	70(70)	15(15)	25(25)	70(55)	70(70)	125(95)	125(95)	125(115)	125(115)	60(45)	60(45)

*1 : The values in ( ) are of T*V (radial lead wire).
*2 : When the stroke length is 15 mm or less, the two switches could turn ON at the same time. In this case, adjust switch mounting positions to be as far apart as possible.

LCM
LCR
LCG
LCW
LCX
STM
STG
STS/STL
STR2
UCA2
ULK*
JSK/M2
JSG
JSC3/JSC4
USSD
UFCD
USC
UB
JSB3
LMB
LML
HCM
HCA
LBC
CAC4
UCAC2
CAC-N
UCAC-N
RCS2
RCC2
PCC
SHC
MCP
GLC
MFC
BBS
RRC
GRC
RV3*
NHS
HRL
LN
Hand
Chuk
MecHnd/Chuk
ShkAbs
FJ
FK
SpdContr
Ending

Min. stroke length with JSC3 switch (T switch)

● Min. stroke length with T8 switch

Switch quantity	Different surface mounting				Same surface mounting				Center trunnion mounting				Rod side trunnion mounting No position detection at rod side stroke end.	Head side trunnion mounting No position detection at head side stroke end.
Bore size	1	2	3	4	1	2	3	4	1	2	3	4	1	1
ø40	15(10)	20(20)	40(40)	60(60)	15(10)	50(35)	95(65)	140(95)	95(85)	95(85)	155(125)	155(125)	45(40)	45(40)
ø50	10(10)	20(20)	40(40)	60(60)	10(10)	20(20)	70(55)	70(60)	115(115)	115(115)	135(135)	135(135)	50(50)	50(50)
ø63	10(10)	20(20)	40(40)	60(60)	10(10)	20(20)	70(55)	70(60)	95(75)	95(75)	110(110)	110(110)	45(35)	45(35)
ø80	15(15)	25(25)	45(45)	65(65)	15(15)	25(25)	70(55)	70(65)	100(70)	100(70)	115(115)	115(115)	50(35)	50(35)
ø100	15(15)	25(25)	45(45)	65(65)	15(15)	25(25)	70(55)	70(65)	110(80)	110(80)	125(125)	125(125)	55(40)	55(40)

*1: The values in ( ) are of T*V (radial lead wire).
*2: When the stroke length is 15 mm or less, the two switches could turn ON at the same time. In this case, adjust switch mounting positions to be as far apart as possible.

● Min. stroke length with T2/T3 switches

Switch quantity	Different surface mounting				Same surface mounting				Center trunnion mounting				Rod side trunnion mounting No position detection at rod side stroke end.	Head side trunnion mounting No position detection at head side stroke end.
Bore size	1	2	3	4	1	2	3	4	1	2	3	4	1	1
ø40	20(10)	20(15)	25(25)	40(40)	20(10)	60(45)	105(75)	150(105)	105(75)	105(75)	165(135)	165(135)	50(35)	50(35)
ø50	15(10)	15(15)	25(25)	40(40)	15(10)	15(15)	60(45)	60(45)	105(75)	105(75)	105(75)	105(75)	45(30)	45(30)
ø63	15(10)	15(15)	25(25)	40(40)	15(10)	15(15)	60(45)	60(45)	110(80)	110(80)	110(85)	110(85)	50(35)	50(35)
ø80	15(10)	15(15)	30(30)	45(45)	15(10)	15(15)	60(45)	60(45)	115(85)	115(85)	115(90)	115(90)	55(40)	55(40)
ø100	10(10)	15(15)	30(30)	45(45)	10(10)	15(15)	60(45)	60(45)	125(95)	125(95)	125(100)	125(100)	60(45)	60(45)

*1: The values in ( ) are of T*V (radial lead wire).
*2: When the stroke length is 15 mm or less, the two switches could turn ON at the same time. In this case, adjust switch mounting positions to be as far apart as possible.

● Min. stroke length with T1/T2Y/T3Y/T2W/T3W/T2YD switches

Switch quantity	Different surface mounting				Same surface mounting				Center trunnion mounting				Rod side trunnion mounting No position detection at rod side stroke end.	Head side trunnion mounting No position detection at head side stroke end.
Bore size	1	2	3	4	1	2	3	4	1	2	3	4	1	1
ø40	20(10)	20(15)	25(25)	40(40)	20(10)	60(45)	105(75)	150(105)	105(75)	105(75)	165(135)	165(135)	50(35)	50(35)
ø50	15(10)	15(15)	25(25)	40(40)	15(10)	15(15)	60(45)	60(45)	100(70)	100(70)	100(75)	100(75)	45(30)	45(30)
ø63	15(10)	15(15)	25(25)	40(40)	15(10)	15(15)	60(45)	60(45)	105(75)	105(75)	105(85)	105(85)	50(35)	50(35)
ø80	15(10)	15(15)	30(30)	45(45)	15(10)	15(15)	60(45)	60(45)	110(80)	110(80)	110(90)	110(90)	55(40)	55(40)
ø100	10(10)	15(15)	30(30)	45(45)	10(10)	15(15)	60(45)	60(45)	120(90)	120(90)	120(100)	120(100)	60(45)	60(45)

*1: The values in ( ) are of T*V (radial lead wire). T2YD does not have a radial lead wire (V).
*2: When the stroke length is 15 mm or less, the two switches could turn ON at the same time. In this case, adjust switch mounting positions to be as far apart as possible.

● Min. stroke length with T2W/T3W switches

	Different surface mounting				Same surface mounting				Center trunnion mounting				Rod side trunnion mounting No position detection at rod side stroke end.	Head side trunnion mounting No position detection at head side stroke end.
Switch quantity	1	2	3	4	1	2	3	4	1	2	3	4	1	1
ø40	20(5)	20(10)	20(15)	25(25)	20(5)	65(50)	110(80)	155(110)	110(80)	110(80)	170(140)	170(140)	50(35)	50(35)
ø50	20(5)	20(10)	20(15)	20(20)	20(5)	20(10)	65(40)	65(40)	110(80)	110(80)	110(60)	110(60)	50(35)	50(35)
ø63	20(5)	20(10)	20(15)	25(25)	20(5)	20(10)	65(40)	65(40)	115(85)	115(85)	115(65)	115(65)	55(40)	55(40)
ø80	15(5)	15(10)	15(15)	25(25)	15(5)	15(10)	60(40)	60(40)	120(90)	120(90)	120(70)	120(70)	55(40)	55(40)
ø100	10(5)	10(10)	20(20)	25(25)	10(5)	10(10)	60(40)	60(40)	130(100)	130(100)	130(85)	130(85)	60(45)	60(45)

*1: The values in ( ) are of T*V (radial lead wire).
*2: When the stroke length is 15 mm or less, the two switches could turn ON at the same time. In this case, adjust switch mounting positions to be as far apart as possible.

Min. stroke length with JSC4 switch (T switch)

● ø125 to 180

Item / Bore size (mm)	Stroke length when mounted on the same surface	Center trunnion mounting stroke	Rod side trunnion mounting stroke	Head side trunnion mounting stroke
	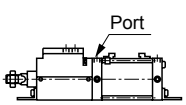	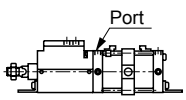	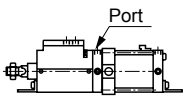	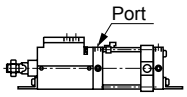
ø125	20 or more	120 or more	70 or more	
ø140		125 or more	75 or more	
ø160		130 or more	80 or more	
ø180		135 or more	85 or more	

LCM
LCR
LCG
LCW
LCX
STM
STG
STS/STL
STR2
UCA2
ULK*
JSK/M2
JSG
JSC3/JSC4
USSD
UFCD
USC
UB
JSB3
LMB
LML
HCM
HCA
LBC
CAC4
UCAC2
CAC-N
UCAC-N
RCS2
RCC2
PCC
SHC
MCP
GLC
MFC
BBS
RRC
GRC
RV3*
NHS
HRL
LN
Hand
Chuk
MecHnd/Chuk
ShkAbs
FJ
FK
SpdContr
Ending

Switch specifications (T type switch)

● 1-color/2-color display/for AC magnetic field proof

Item	Proximity 2-wire	Proximity 2-wire			Proximity 3-wire				Reed 2-wire							Proximity 2-wire
	T1H/ T1V	T2H/T2V/ T2JH/T2JV	T2YH/ T2YV	T2WH/ T2WV	T3H/ T3V	T3PH/ T3PV	T3YH/ T3YV	T3WH/ T3WV	T0H/T0V		T5H/T5V		T8H/T8V			T2YD(*4) T2YDT
Applications	For programmable controller, relay, compact solenoid valve	Dedicated for programmable controller			For programmable controller, relay				For programmable controller, relay		For programmable controller, relay, IC circuit (no indicator lamp), serial connection		For programmable controller, relay			For programmable controller
Output method	-				NPN output	PNP output	NPN output	NPN output	-							
Pwr. supp. V.	-				10 to 28 VDC				-							
Load voltage	85 to 265 VAC	10 to 30 VDC		24 VDC ±10%	30 VDC or less				12/24 VDC	110 VAC	5/12/24 VDC	110 VAC	12/24 VDC	110 VAC	220 VAC	24 VDC ±10%
Load current	5 to 100 mA	5 to 20 mA (*3)			100 mA or less		50 mA or less		5 to 50 mA	7 to 20 mA	≤50 mA	≤20 mA	5 to 50 mA	7 to 20 mA	7 to 10 mA	5 to 20 mA
Indicator lamp	LED (Lit when ON)	LED (Lit when ON)	Red/green LED (Lit when ON)	Red/green LED (Lit when ON)	LED (Lit when ON)	Yellow LED (Lit when ON)	Red/green LED (Lit when ON)	Red/green LED (Lit when ON)	LED (Lit when ON)		Without indicator lamp		LED (Lit when ON)			Red/green LED (Lit when ON)
Leakage current	≤ 1 mA at 100 VAC, ≤ 2 mA at 200 VAC	1 mA or less			10 μA or less				0 mA							1 mA or less
Weight g	1 m:33 3 m:87 5 m:142	1 m:18 3 m:49 5 m:80	1 m:33 3 m:87 5 m:142	1 m:18 3 m:49 5 m:80	1 m:18 3 m:49 5 m:80		1 m:33 3 m:87 5 m:142	1 m:18 3 m:49 5 m:80	1 m:18 3 m:49 5 m:80				1 m:33 3 m:87 5 m:142			1 m:61 3 m:166 5 m:272

*1 : Refer to Ending Page 1 for detailed switch specifications and dimensions.
*2 : Switches other than the above models, such as switches with connectors, are also available. Refer to Ending Page 1.
*3 : The max. load current is 20 mA at 25°C. The current is lower than 20 mA if the operating ambient temperature around the switch is higher than 25°C. (5 to 10 mA at 60°C)
*4 : AC magnetic field proof switch (T2YD/T2YDT) cannot be used in DC magnetic fields.

Cylinder weight

● JSC3(ø40 to ø100)

[Unit: kg]

Item/ mounting / Bore size (mm)	Product weight when stroke length (S) = 0 mm						Switch weight	Mounting bracket weight		Additional weight per S = 100 mm
	Basic (00)	Foot (LB)	Flange (FA, FB)	Eye bracket (CA)	Clevis bracket (CB)	Trunnion (TC)		T type	H type	
ø40	2.48	2.66	2.91	2.83	2.83	2.86	Refer to the weight in the switch specifications.	0.024	0.028	0.39
ø50	3.47	3.67	3.97	3.87	3.87	3.97		0.022	0.026	0.46
ø63	5.09	5.49	6.19	5.79	5.79	5.89		0.020	0.024	0.50
ø80	8.15	8.85	9.95	9.65	9.65	9.45		0.026	0.029	0.90
ø100	14.70	15.70	17.40	16.90	16.90	17.30		0.024	0.028	1.12

(Example) Product weight of JSC3-H-LB-50B-200-T0H-D

Product weight for stroke length 0 mm … 3.67 kg
Additional weight for stroke length 200 mm … $0.46 \times \frac{200}{100} = 0.92$ kg
Weight of 2 TOH switches …… 0.018×2=0.036 kg
Weight of 2 mounting brackets …… 0.022×2=0.044 kg
Product weight …… 3.67+0.92+0.036+0.044=4.670 kg

● JSC4(ø125 to ø180)

(Unit: kg)

Item/mounting / Bore size (mm)	Product weight when stroke length (S) = 0 mm					Switch weight		Additional weight per S = 100 mm
	Axial foot (LB)	Flange (FA/FB)	Eye bracket (CA)	Clevis bracket (CB)	Trunnion (TA/TB/TC)	Switch	Mounting bracket	
ø125	25.72	27.52	27.22	27.32	27.62	Refer to the weight in the switch specifications.	0.028	1.54
ø140	32.95	36.35	34.75	34.95	34.15		0.030	1.78
ø160	42.85	46.65	44.75	45.05	46.15		0.034	2.22
ø180	61.55	69.05	64.45	64.95	65.15		0.038	2.96

(Example) Product weight of JSC4-H-LB-125B-300-T0H-D

Product weight when S = 0 mm …… 25.72 kg
Additional weight when S = 300 mm …… $1.54 \times \frac{300}{100} = 4.62$ kg
Weight of 2 switches (T0H-D) …… 0.018×2=0.036 kg
Weight of 2 switch brackets …… 0.028×2=0.056 kg
Product weight …… 25.72+4.62+0.036+0.056=30.432 kg

Theoretical thrust table

(Unit: N)

Bore size (mm)		Operating direction	Working pressure MPa										
			0.1	0.15	0.2	0.3	0.4	0.5	0.6	0.7	0.8	0.9	1.0
JSC3	ø40	Push	1.26×10^2	1.88×10^2	2.51×10^2	3.77×10^2	5.03×10^2	6.28×10^2	7.54×10^2	8.80×10^2	1.01×10^3	1.13×10^3	1.26×10^3
		Pull	1.06×10^2	1.58×10^2	2.11×10^2	3.17×10^2	4.22×10^2	5.28×10^2	6.33×10^2	7.39×10^2	8.44×10^2	9.50×10^2	1.06×10^3
	ø50	Push	1.96×10^2	2.95×10^2	3.93×10^2	5.89×10^2	7.85×10^2	9.82×10^2	1.18×10^3	1.37×10^3	1.57×10^3	1.77×10^3	1.96×10^3
		Pull	1.65×10^2	2.47×10^2	3.30×10^2	4.95×10^2	6.60×10^2	8.25×10^2	9.90×10^2	1.15×10^3	1.32×10^3	1.48×10^3	1.65×10^3
	ø63	Push	3.12×10^2	4.68×10^2	6.23×10^2	9.35×10^2	1.25×10^3	1.56×10^3	1.87×10^3	2.18×10^3	2.49×10^3	2.81×10^3	3.12×10^3
		Pull	2.80×10^2	4.20×10^2	5.61×10^2	8.41×10^2	1.12×10^3	1.40×10^3	1.68×10^3	1.96×10^3	2.24×10^3	2.52×10^3	2.80×10^3
	ø80	Push	5.03×10^2	7.54×10^2	1.01×10^3	1.51×10^3	2.01×10^3	2.51×10^3	3.02×10^3	3.52×10^3	4.02×10^3	4.52×10^3	5.03×10^3
		Pull	4.54×10^2	6.80×10^2	9.07×10^2	1.36×10^3	1.81×10^3	2.27×10^3	2.72×10^3	3.17×10^3	3.63×10^3	4.08×10^3	4.54×10^3
	ø100	Push	7.85×10^2	1.18×10^3	1.57×10^3	2.36×10^3	3.14×10^3	3.93×10^3	4.71×10^3	5.50×10^3	6.28×10^3	7.07×10^3	7.85×10^3
		Pull	7.15×10^2	1.07×10^3	1.43×10^3	2.14×10^3	2.86×10^3	3.57×10^3	4.29×10^3	5.00×10^3	5.72×10^3	6.43×10^3	7.15×10^3
JSC4	ø125	Push	1.23×10^3	1.84×10^3	2.45×10^3	3.68×10^3	4.91×10^3	6.14×10^3	7.36×10^3	8.59×10^3	9.82×10^3	1.10×10^4	1.23×10^4
		Pull	1.13×10^3	1.70×10^3	2.26×10^3	3.39×10^3	4.52×10^3	5.65×10^3	6.79×10^3	7.92×10^3	9.05×10^3	1.02×10^4	1.13×10^4
	ø140	Push	1.54×10^3	2.31×10^3	3.08×10^3	4.62×10^3	6.16×10^3	7.70×10^3	9.24×10^3	1.08×10^4	1.23×10^4	1.39×10^4	1.54×10^4
		Pull	1.44×10^3	2.16×10^3	2.89×10^3	4.33×10^3	5.77×10^3	7.22×10^3	8.66×10^3	1.01×10^4	1.15×10^4	1.30×10^4	1.44×10^4
	ø160	Push	2.01×10^3	3.02×10^3	4.02×10^3	6.03×10^3	8.04×10^3	1.01×10^4	1.21×10^4	1.41×10^4	1.61×10^4	1.81×10^4	2.01×10^4
		Pull	1.88×10^3	2.83×10^3	3.77×10^3	5.65×10^3	7.54×10^3	9.42×10^3	1.13×10^4	1.32×10^4	1.51×10^4	1.70×10^4	1.88×10^4
	ø180	Push	2.54×10^3	3.82×10^3	5.09×10^3	7.03×10^3	1.02×10^3	1.27×10^4	1.53×10^4	1.78×10^4	2.04×10^4	2.29×10^4	2.54×10^4
		Pull	2.39×10^3	$3.58+10^3$	4.77×10^3	7.16×10^3	9.54×10^3	1.19×10^4	1.43×10^4	1.67×10^4	1.91×10^4	2.15×10^4	2.39×10^4

LCM
LCR
LCG
LCW
LCX
STM
STG
STS/STL
STR2
UCA2
ULK*
JSK/M2
JSG
JSC3/JSC4
USSD
UFCD
USC
UB
JSB3
LMB
LML
HCM
HCA
LBC
CAC4
UCAC2
CAC-N
UCAC-N
RCS2
RCC2
PCC
SHC
MCP
GLC
MFC
BBS
RRC
GRC
RV3*
NHS
HRL
LN
Hand
Chuk
MecHnd/Chuk
ShkAbs
FJ
FK
SpdContr
Ending

How to order (ø40 to ø100)

Without switch (built-in magnet for switch)

JSC3 - ◯ H — LB - 40 ◯ B - 50 ———— S I

With switch (built-in magnet for switch)

JSC3 - ◯ H — LB - 40 ◯ B - 50 - T0H - R - S I

With strong magnetic field proof (for H0, H0Y switches) switch (built-in magnet for switch)

JSC3 - ◯ H L2 - LB - 40 ◯ B - 50 - H0 - R - S I

Model No.

Ⓐ Brake release pressure

Ⓑ Mounting *1

Ⓒ Bore size

Ⓓ Port thread

Ⓔ Cushion

Ⓕ Stroke length *2 *3

Ⓖ Switch model No. *5
* indicates the lead wire length.

Ⓗ Switch quantity *6

Ⓘ Option *7

Ⓙ Accessory *8

Code	Description
Ⓐ Brake release pressure	
Blank	Standard (0.3 MPa)
S	Low pressure release (0.25 MPa)
Ⓑ Mounting	
00	Basic
LB	Axial foot
FA	Rod side flange
FB	Head side flange
FC	Head side special flange
CA	Eye bracket
CB	Clevis bracket (pin and snap ring attached)
TC	Intermediate trunnion
TA	Rod side trunnion
TB	Head side trunnion
Ⓒ Bore size (mm)	
40	ø40
50	ø50
63	ø63
80	ø80
100	ø100
Ⓓ Port thread	
Blank	Rc thread
N	NPT thread (made-to-order product)
G	G thread (made-to-order product)
Ⓔ Cushion	
B	Both sides cushioned
R	Rod side cushioned
H	Head side cushioned
N	Without cushion

Ⓕ Stroke length (mm)

Bore size	Stroke length *4	Available stroke length	Custom stroke length
ø40	**1 to 600**	**1600**	**In 1 mm increments**
ø50	**1 to 600**	**2000**	
ø63	**1 to 600**	**2500**	
ø80	**1 to 700**	**2500**	
ø100	**1 to 800**	**2500**	

Ⓖ Switch model No.

Refer to the switch model numbers on the next page.

*** Lead wire length**	
Blank	1 m (standard)
3	3 m (option)
5	5 m (option)
Ⓗ Switch quantity	
R	1 on rod side
H	1 on head side
D	2
T	3
4	4 (when there are more than 4 switches, indicate switch quantity.)

Ⓘ Option

		Max. ambient temperature	instantaneous max. temp
J	Bellows	100°C	200°C
L	Bellows	250°C	400°C
M	Piston rod material (stainless steel)		
Blank	Cushion needle position R (standard)		
S	Cushion needle position S		
T	Cushion needle position T		
G	With indicator		

Ⓙ Accessory	
I	Rod eye
Y	Rod clevis (pin and snap ring attached)
B1	Eye bracket
B2	Clevis bracket (pin and snap ring attached)
B3	Eye bracket
B4	Trunnion No. 2 bracket (2 pcs./set)

⚠ Precautions for model selection

*1 : Mounting bracket will be shipped assembled with the product.
(Head side special flange is attached separately)
*2 : If the stroke exceeds the max. stroke length, refer to Ending Page 69.
*3 : The max. stroke length available for ø63 to ø100 bore size models with bellows is 2000 mm.
*4 : Refer to pages 818 and 819 for the min. stroke length with switch.
*5 : T2YD, T2YDT, H0, and H0Y are strong magnetic field proof switches.
*6 : When selecting TA or TB as mounting, the switch quantity is limited to "H" (1 on head side) for TA, and "R" (1 on rod side) for TB.
*7 : For S, T, and G position indications, check the respective dimensions.
*8 : "I" and "Y" cannot be selected together.
*9 : Refer to Ending Page 85 for custom specifications of rod end form.

[Example of model No.]

JSC3-H-LB-40B-50-T0H-R-SI

Model: Brake cylinder Double acting/low hydraulic

Ⓐ Brake release pressure: Standard 0.3 MPa
Ⓑ Mounting : Axial foot
Ⓒ Bore size : ø40 mm
Ⓓ Port thread : Rc thread
Ⓔ Cushion : Both sides cushioned
Ⓕ Stroke length : 50 mm
Ⓖ Switch model No. : Reed switch TOH, lead wire 1 m
Ⓗ Switch quantity : 1 on rod side
Ⓘ Option : Cushion needle position S
Ⓙ Accessory : Rod eye

LCM
LCR
LCG
LCW
LCX
STM
STG
STS/STL
STR2
UCA2
ULK*
JSK/M2
JSG
JSC3/JSC4
USSD
UFCD
USC
UB
JSB3
LMB
LML
HCM
HCA
LBC
CAC4
UCAC2
CAC-N
UCAC-N
RCS2
RCC2
PCC
SHC
MCP
GLC
MFC
BBS
RRC
GRC
RV3*
NHS
HRL
LN
Hand
Chuk
MecHnd/Chuk
ShkAbs
FJ
FK
SpdContr
Ending

[G] Switch model No.

T type switch						
Axial lead wire	Radial lead wire	Contact	Voltage AC	Voltage DC	Display	Lead wire
TOH*	TOV*	Reed	●	●	1-color display	2-wire
T5H*	T5V*	Reed	●	●	Without indicator lamp	2-wire
T8H*	T8V*	Reed	●	●	1-color display	2-wire
T1H*	T1V*	Proximity	●		1-color display	2-wire
T2H*	T2V*	Proximity		●	1-color display	2-wire
T3H*	T3V*	Proximity		●	1-color display	3-wire
T2WH*	T2WV*	Proximity		●	2-color display	2-wire
T2YH*	T2YV*	Proximity		●	2-color display	2-wire
T3WH*	T3WV*	Proximity		●	2-color display	3-wire
T3YH*	T3YV*	Proximity		●	2-color display	3-wire
T3PH*	T3PV*	Proximity		●	1-color display	3-wire
T2YD*	-	Proximity		●	2-color display for AC magnetic field	2-wire
T2YDT*	-	Proximity		●	2-color display for AC magnetic field	2-wire
T2JH*	T2JV*	Proximity		●	1-color display off-delay	2-wire
H type switch						
HO*	-	Reed	●	●	Strong magnetic field proof	2-wire
HOY*	-	Reed		●	Strong magnetic field 2-color display	2-wire

How to order brake unit

JSC3 - 40 - BRAKE-UNIT

Bore size (Item Ⓒ on page 822)

● Mounting FA

JSC3 - FA - 40 - BRAKE-UNIT

Bore size (Item Ⓒ on page 822)

How to order T type switch

● Switch body + mounting bracket set

JSC3 - T0H - 40

Switch model No. (Item Ⓖ)
Bore size (Item Ⓒ on page 822)

● Switch body only

SW - T0H

Switch model No. (Item Ⓖ)

● Mounting bracket set

JSC3 - TS - 40

Mounting bracket
Bore size (Item Ⓒ on page 822)

How to order T2YD type switch

● Switch body + mounting bracket set
·ø40 to ø100

JSC3 - T2YD - 40

Switch model No. (Item Ⓖ)
Bore size (Item Ⓒ on page 822)

● Switch body only
·ø40 to ø100

SW - T2YD

Switch model No. (Item Ⓖ)

● Mounting bracket set

JSC3 - T - 40

Mounting bracket
Bore size (Item Ⓒ on page 822)

How to order H type switch

● Switch body + mounting bracket set

JSC3-L2 - H0 - 40

Switch model No. (Item Ⓖ)
Bore size (Item Ⓒ on page 822)

● Switch body only

SW - H0

Switch model No. (Item Ⓖ)

● Mounting bracket set

JSC3-L2 - H - 40

Mounting bracket
Bore size (Item Ⓒ on page 822)

How to order mounting bracket

● ø40 to ø100

Bore size (mm) / Mounting bracket	ø40	ø50	ø63	ø80	ø100
Foot (LB) *1	JSC3-40-LB	JSC3-50-LB	JSC3-63-LB	JSC3-80-LB	JSC3-100-LB
Flange (FB)	JSC3-40-FB	JSC3-50-FB	JSC3-63-FB	JSC3-80-FB	JSC3-100-FB
Eye bracket (CA)	S1-CA-40	S1-CA-50	S1-CA-63	S1-CA-80	S1-CA-100
Clevis bracket (CB) *2	S1-CB-40	S1-CB-50	S1-CB-63	S1-CB-80	S1-CB-100

*1: The foot mounting bracket is provided as 2 pcs./set. *2: A pin and a snap ring are attached.
*3: All mounting brackets have mounting bolts attached.

LCM
LCR
LCG
LCW
LCX
STM
STG
STS/STL
STR2
UCA2
ULK*
JSK/M2
JSG
JSC3/JSC4
USSD
UFCD
USC
UB
JSB3
LMB
LML
HCM
HCA
LBC
CAC4
UCAC2
CAC-N
UCAC-N
RCS2
RCC2
PCC
SHC
MCP
GLC
MFC
BBS
RRC
GRC
RV3*
NHS
HRL
LN
Hand
Chuk
MecHnd/Chuk
ShkAbs
FJ
FK
SpdContr
Ending

How to order (ø125 to 180)

Without switch (without magnet for switch)

JSC4-H - LB - 125 ◯ B - 50 ——— S I

With switch (built-in magnet for switch)

JSC4-LH - LB - 125 ◯ B - 50 - T0H - R - S I

Ⓐ Mounting *1

Ⓑ Bore size

Ⓒ Port thread

Ⓓ Cushion

Ⓔ Stroke length *2

Ⓕ Switch model No.
* indicates the lead wire length.

Ⓖ Switch quantity *3

Ⓗ Option

Ⓘ Accessory *5

Code	Description
Ⓐ Mounting	
LB	Axial foot
FA	Rod side flange
FB	Head side flange
CA	Eye bracket
CB	Clevis bracket (pin and snap ring attached)
TC	Intermediate trunnion
TA	Rod side trunnion
TB	Head side trunnion

Ⓑ Bore size (mm)

125	ø125
140	ø140
160	ø160
180	ø180

Ⓒ Port thread

Blank	Rc thread
N	NPT thread (made-to-order product)
G	G thread (made-to-order product)

Ⓓ Cushion

B	Both sides cushioned
R	Rod side cushioned
H	Head side cushioned
N	Without cushion

Ⓔ Stroke length (mm)

Bore size	Stroke length	Available stroke	Custom stroke length
ø125	1 to 800	2000	In 1 mm increments
ø140	1 to 800	2000	
ø160	1 to 800	2000	
ø180	1 to 900	2000	

Ⓕ Switch model No.

Axial lead wire	Radial lead wire	Contact	Voltage AC	Voltage DC	Indicator	Lead wire
T0H*	T0V*	Reed	●	●	1-color display	2-wire
T5H*	T5V*	Reed	●	●	Without indicator lamp	2-wire
T8H*	T8V*	Reed	●	●	1-color display	2-wire
T1H*	T1V*	Proximity	●		1-color display	2-wire
T2H*	T2V*	Proximity		●	1-color display	2-wire
T3H*	T3V*	Proximity		●	1-color display	3-wire
T3PH*	T3PV*	Proximity		●	1-color display (PNP output)	3-wire
T2WH*	T2WV*	Proximity		●	2-color display	2-wire
T2YH*	T2YV*	Proximity		●	2-color display	2-wire
T3WH*	T3WV*	Proximity		●	2-color display	3-wire
T3YH*	T3YV*	Proximity		●	2-color display	3-wire
T2JH*	T2JV*	Proximity		●	1-color display off-delay	2-wire
T2YD*	-	Proximity		●	2-color display for AC magnetic field	2-wire
T2YDT*	-	Proximity		●	2-color display for AC magnetic field	2-wire

*** Lead wire length**

Blank	1 m (standard)
3	3 m (option)
5	5 m (option)

Ⓖ Switch quantity

R	1 on rod side
H	1 on head side
D	2
T	3
4	4

Ⓗ Option

		Max. ambient temp.	instantaneous max. temp
J	Bellows	100°C	200°C
L	Bellows	250°C	400°C
M	Piston rod material (stainless steel)		
Blank	Cushion needle position (standard)		
R	Cushion needle position R		
S	Cushion needle position S		
T	Cushion needle position T		
C2	With cushion section check valve		

*4

Ⓘ Accessory

I	Rod eye
Y	Rod clevis (pin and snap ring attached)
B1	Eye bracket
B2	Clevis bracket

Made-to-order product code *6

-S092	JSC3-LH Compatible mounting dimensions

⚠ Precautions for model No. selection

*1 : Mounting bracket will be shipped assembled with the product.
*2 : Refer to page 819 for the min. stroke length with switch.
*3 : When selecting TA or TB as mounting, the switch quantity is limited to "H" (1 on head side) for TA, and R (1 on rod side) for TB.
*4 : Refer to page 825 for the cushion needle position indication.
*5 : "I" and "Y" cannot be selected together.
*6 : Refer to page 829 for details.

[Example of model No.]

JSC4-LH-LB-125B-50-T0H-R-SI

Model: Brake cylinder Double acting/low hydraulic

Ⓐ Mounting	: Axial foot
Ⓑ Bore size	: ø125 mm
Ⓒ Port thread	: Rc thread
Ⓓ Cushion	: Both sides cushioned
Ⓔ Stroke length	: 50 mm
Ⓕ Switch model No.	: Reed switch T0H, lead wire 1 m
Ⓖ Switch quantity	: 1 on rod side
Ⓗ Option	: Cushion needle position S
Ⓘ Accessory	: Rod eye

LCM
LCR
LCG
LCW
LCX
STM
STG
STS/STL
STR2
UCA2
ULK*
JSK/M2
JSG
JSC3/JSC4
USSD
UFCD
USC
UB
JSB3
LMB
LML
HCM
HCA
LBC
CAC4
UCAC2
CAC-N
UCAC-N
RCS2
RCC2
PCC
SHC
MCP
GLC
MFC
BBS
RRC
GRC
RV3*
NHS
HRL
LN
Hand
Chuk
MecHnd/Chuk
ShkAbs
FJ
FK
SpdContr
Ending

How to order brake unit

JSC4 - 125 - BRAKE-UNIT

125: Bore size (Item Ⓑ on page 824)

How to order T type switch

● Switch body + mounting bracket set

JSC4-LN - T0H - 125

T0H: Switch model No. (Item Ⓕ on page 824)
125: Bore size (Item Ⓑ on page 824)

● Switch body only

SW - T0H

T0H: Switch model No. (Item Ⓕ on page 824)

● Mounting bracket set

JSC4-LN - TS - 125

125: Bore size (Item Ⓑ on page 824)

How to order T2YD type switch

● Switch body + mounting bracket set

JSC4-LN - T2YD - 125

T2YD: Switch model No. (Item Ⓕ on page 824)
125: Bore size (Item Ⓑ on page 824)

● Switch body only

SW - T2YD

T2YD: Switch model No. (Item Ⓕ on page 824)

● Mounting bracket set

JSC4-LN - T - 125

125: Bore size (Item Ⓑ on page 824)

Cushion needle position (needle position from rod direction with the port on the top side)

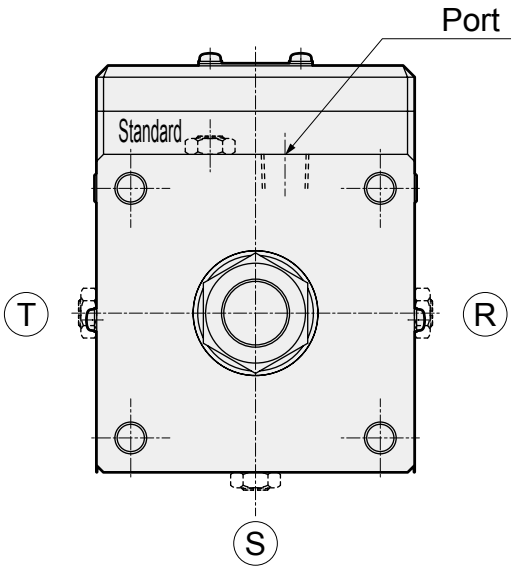

Certified class 2 pressure vessel stroke length

Bore size	Stroke length
ø160	1948 or more
ø180	1526 or more

LCM
LCR
LCG
LCW
LCX
STM
STG
STS/STL
STR2
UCA2
ULK*
JSK/M2
JSG
JSC3/JSC4
USSD
UFCD
USC
UB
JSB3
LMB
LML
HCM
HCA
LBC
CAC4
UCAC2
CAC-N
UCAC-N
RCS2
RCC2
PCC
SHC
MCP
GLC
MFC
BBS
RRC
GRC
RV3*
NHS
HRL
LN
Hand
Chuk
MecHnd/Chuk
ShkAbs
FJ
FK
SpdContr
Ending

Internal structure and parts list (ø40 to ø100)

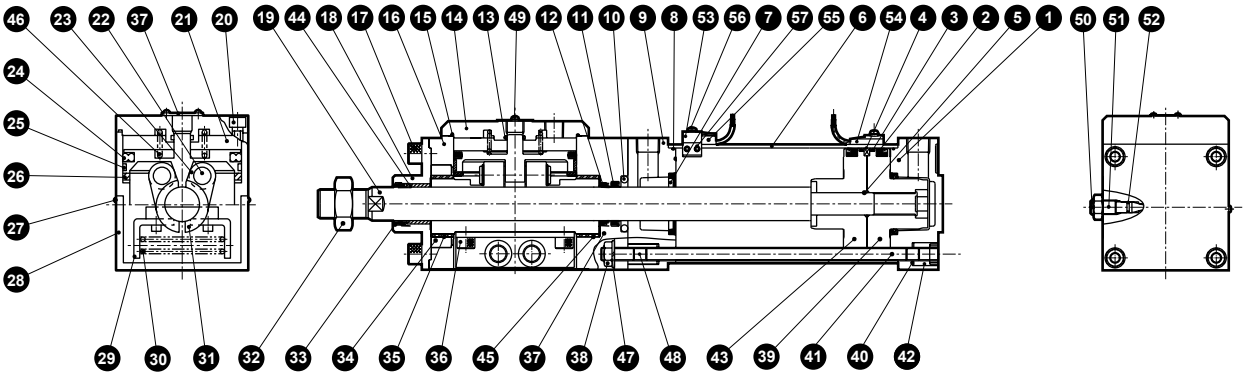

Brake section cannot be disassembled

No.	Part name	Material	Remarks
1	Head cover	Aluminum alloy die-casting	Paint
2	Piston packing	Nitrile rubber	
3	Wear ring	Polyacetal resin	
4	Magnet	Plastic	
5	Piston gasket	Nitrile rubber	
6	Cylinder tube	Aluminum alloy	Hard alumite
7	Cushion packing	Nitrile rubber, steel	
8	Cylinder gasket	Nitrile rubber	
9	Rod cover	Aluminum alloy die-casting	Paint
10	Metal seal	Nitrile rubber	
11	Rod packing	Nitrile rubber	
12	Dust wiper	Nitrile rubber	
13	Cap gasket A	Nitrile rubber	
14	Body cap	Cast iron	Nitriding
15	Cap gasket B	Nitrile rubber	
16	Brake body	Aluminum alloy casting	Alumite
17	Hexagon socket head cap screw	Alloy steel	Black finish
18	Rod metal	Steel	Manganese phosphate
19	Piston rod	Steel	Industrial chrome plating
20	Hexagon socket head cap screw	Alloy steel	Black finish
21	Brake piston	Cast iron	Manganese phosphate
22	Parallel pin	Steel	
23	Bearing		
24	Piston packing B	Nitrile rubber	
25	Wear ring	Polyacetal resin	
26	Cushion rubber	Urethane rubber	
27	Phillips pan head machine screw	Steel	Zinc chromate
28	Cover	Steel	Paint
29	Spring holder	Steel	Zinc chromate
30	Spring	Steel	
31	Brake shoe metal	Cast iron	Nickeling
32	Rod nut	Steel	Zinc chromate
33	Dust wiper	Nitrile rubber	
34	DU ring	Steel	Black finish
35	Bush	Oil impregnated bearing alloy	
36	Hexagon socket head cap screw	Alloy steel	Black finish
37	Dust cover	Aluminum alloy	Paint
38	Hexagon nut	Steel	Black finish
39	Piston H	Aluminum alloy die-casting	
40	Tie rod	Steel	Zinc chromate
41	Conical spring washer	Steel	Black finish
42	Round nut	Steel	Zinc chromate
43	Piston R	Aluminum alloy die-casting	
44	Bush B	Oil impregnated bearing alloy	
45	Thrust washer		
46	Spring	Steel	Paint
47	Toothed washer	Steel	Black finish
48	Hexagon socket set screw	Steel	Black finish
49	Phillips pan head machine screw/captive washer	Steel	Zinc chromate
50	Cushion needle	Copper alloy	Nickeling
51	Needle nut	Copper alloy	Nickeling
52	Needle gasket	Nitrile rubber	
With switch			
53	Switch mounting base	Aluminum alloy	
54	Switch holder	Aluminum alloy	
55	Cylinder switch		
56	Philips pan head machine screw	Steel	Zinc chromate
57	Hexagon socket set screw	Alloy steel	Black finish

Note: Never disassemble the brake section, as the powerful spring installed can be dangerous.

Repair parts list

Bore size (mm)	Kit No.	Repair parts No.
ø40	JSC3-H- 40K	2 3 7 8 10 11 12 33 52
ø50	JSC3-H- 50K	
ø63	JSC3-H- 63K	
ø80	JSC3-H- 80K	
ø100	JSC3-H-100K	

Note: Specify the kit No. when placing an order.

Internal structure and parts list (ø125 to ø180)

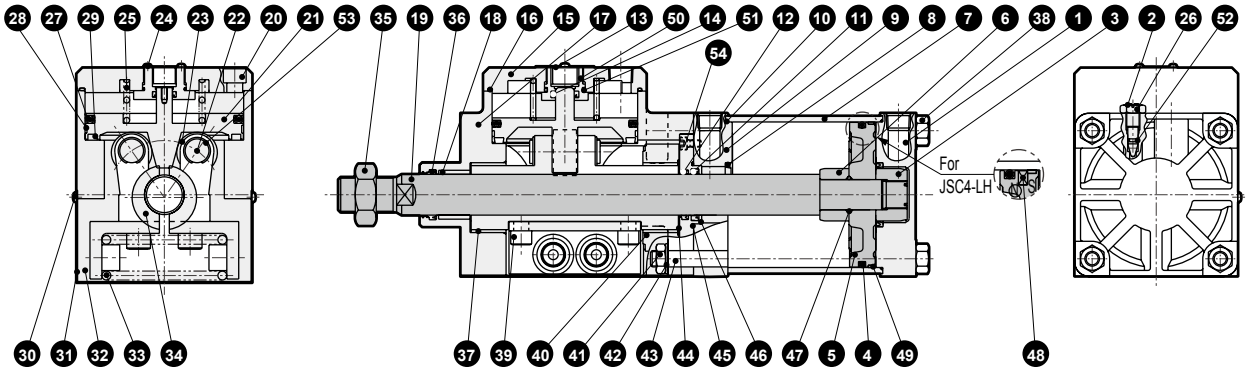

Brake section cannot be disassembled

No.	Part name	Material	Remarks	No.	Part name	Material	Remarks
1	Head cover	Aluminum alloy casting	Chromate	28	Wear ring	Polyacetal resin	
2	Cushion needle	Copper alloy		29	Cushion rubber	Urethane rubber	
3	Cushion ring A	Steel	Zinc chromate	30	Cross-recessed pan head machine screw	Steel	Zinc chromate
4	Piston packing	Nitrile rubber		31	Cover	Steel	Paint
5	Piston	Aluminum alloy casting		32	Spring holder	Steel	Manganese phosphate
6	Cushion ring B	Steel	Zinc chromate	33	Spring	Steel	Black finish
7	Cylinder tube	Aluminum alloy	Hard alumite	34	Brake shoe metal	Cast iron	Nickeling
8	Cushion packing	Nitrile rubber/steel		35	Rod nut	Steel	Zinc chromate
9	Rod cover	Aluminum alloy casting	Chromate	36	Dust wiper	Nitrile rubber	
10	Cylinder gasket	Nitrile rubber		37	Bush A	Oiles drymet	
11	Rod packing	Nitrile rubber		38	Hexagon nut	Steel	Zinc chromate
12	Dust wiper	Nitrile rubber		39	Hexagon socket head cap screw	Alloy steel	Black finish
13	Dust cover	Aluminum alloy	Alumite	40	Ring	Steel	Black finish
14	Rod packing	Nitrile rubber		41	Hexagon nut	Steel	Zinc chromate
15	Body cap	Aluminum alloy casting	Black alumite	42	Toothed washer	Steel	Zinc chromate
16	Cap gasket	Nitrile rubber		43	Tie rod	Steel	Zinc chromate
17	Brake body	Aluminum cast iron	Alumite	44	Thrust washer	Steel	
18	Bush B	Oil impregnated bearing alloy		45	Metal gasket	Nitrile rubber	
19	Piston rod	Steel	Industrial chrome plating	46	Rod metal	Cast iron	Zinc chromate
20	Hexagon socket head cap screw	Alloy steel	Black finish	47	Piston gasket	Nitrile rubber	
21	Brake piston	Cast iron	Manganese phosphate	48	Magnet	Rubber	JSC4-LN only
22	Bearing pin	Steel		49	Wear ring	Polyacetal resin	
23	Bearing	-		50	Body cap	Cast iron	Manganese phosphate
24	Phillips pan head machine screw/captive washer	Steel	Zinc chromate	51	O-ring	Nitrile rubber	
25	Spring	Steel	Paint	52	Needle gasket	Nitrile rubber	
26	Needle nut	Steel	Zinc chromate	53	E type snap ring	Steel	Zinc chromate
27	Piston packing B	Nitrile rubber		54	Hexagon socket head cap screw	Steel	Black finish

Repair parts list

Bore size	Kit No.	Repair parts No.
ø125	JSC4-H-125K	4 8 10 11 12 36 45 49 52
ø140	JSC4-H-140K	
ø160	JSC4-H-160K	
ø180	JSC4-H-180K	

Dimensions

● ø40 to ø100

Same as JSC3 (double acting/single rod). Refer to pages 784 to 793.

● ø125 to ø180

Same as JSC4-N (double acting/no-lubrication). Refer to pages 796 to 803.

Introduction of custom order products

■ JSC3-LH compatible mounting dimensions

How to order

When making an order, add "-S092" at the end of the model No.

Dimensions

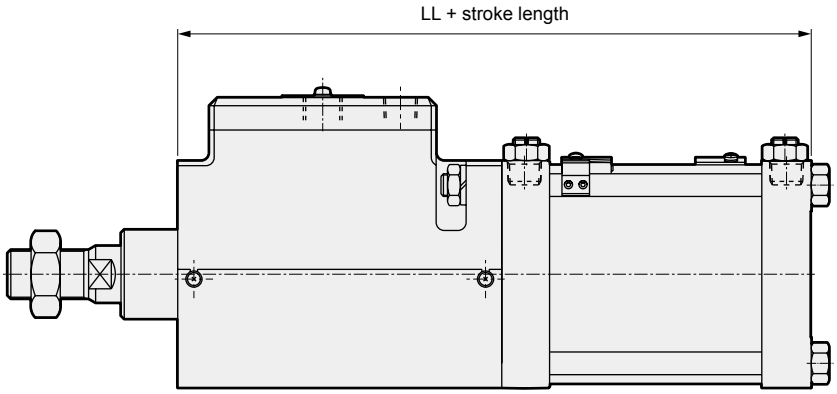

Note: LL dimensions on pages 796 to 803 are as follows.

Code / Bore size (mm)	Dimensions table LL
ø125	311
ø140	338
ø160	367
ø180	388

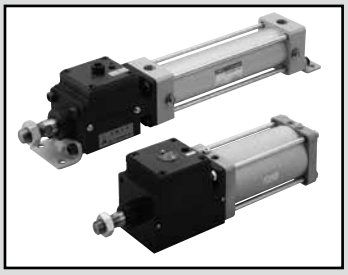

Brake cylinder Double acting/heat resistance

JSC3-T/JSC4-T Series

● Bore size:
JSC3: ø40/ø50/ø63/ø80/ø100/ø125
JSC4: ø140/ø160/ø180

JIS symbol 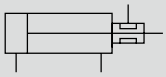

RoHS CAD

Specifications

Item		JSC3-T					JSC3-ST					JSC4-T			
Bore size	mm	ø40	ø50	ø63	ø80	ø100	ø40	ø50	ø63	ø80	ø100	ø125	ø140	ø160	ø180
Actuation		Double acting/heat resistant					Double acting/low pressure release/heat resistance					Double acting/heat resistant			
Working fluid		Compressed air													
Max. working pressure	MPa	1.0 (≈150 psi, 10 bar)													
Min. working pressure	MPa Brake section	0.3 (≈44 psi, 3 bar)					0.25 (≈36 psi, 2.5 bar)					0.3 (≈44 psi, 3 bar)			
	MPa Cylinder	0.1 (≈15 psi, 1 bar)					0.1 (≈15 psi, 1 bar)					0.05 (≈7.3 psi, 0.5 bar)			
Proof pressure	MPa	1.6 (≈230 psi, 16 bar)													
Ambient temperature	°C	5 (41°F) to 120 (248°F) (*2)													
Port size	Brake section	Rc1/8		Rc1/4		Rc3/8	Rc1/8		Rc1/4		Rc3/8	Rc1/2			
	Cylinder	Rc1/4	Rc3/8		Rc1/2		Rc1/4	Rc3/8		Rc1/2		Rc1/2	Rc3/4		
Stroke tolerance	mm	$^{+0.9}_{0}$(to 360), $^{+1.4}_{0}$(to 1000)					$^{+0.9}_{0}$(to 360), $^{+1.4}_{0}$(to 1000)					$^{+1.0}_{0}$(to 300), $^{+1.4}_{0}$(to 1000), $^{+1.8}_{0}$(to 2000)			
Working piston speed	mm/s	50 to 1000 (Operate within the allowable absorbed energy.)													
Cushion		Air cushion													
Effective air cushion length	mm	14.6	16.6		20.6	23.6	14.6	16.6		20.6	23.6	21.6			
Lubrication (*1)		Not available													
Holding force	N	980	1569	2451	3922	6178	784	1255	1961	3138	4941	9600	12000	15800	20000
Allowable absorbed energy	J Cushioned	4.29	8.37	15.8	27.9	49.8	4.29	8.37	15.8	27.9	49.8	63.6	91.5	116	152
	J Without cushion	0.067	0.079	0.079	0.201	0.301	0.067	0.079	0.079	0.201	0.301	0.371	0.386	0.386	0.958
		Note: Without any cushion, this product cannot absorb large energy generated by an external load. We recommend using an external shock absorber.													

*1 : Periodically apply additional heat-resistant grease.
*2 : The ambient temperature for the following products is 5 to 100°C.

Bore size	Stroke length
ø160	1948 or more
ø180	1526 or more

Custom order of the above is available when using in applications with a temperature range of 5 to 120°C. Contact CKD.

Stroke length

Bore size (mm)	Standard stroke length (mm)	Max. stroke length (mm)	Available stroke length (mm)	Min. stroke length (mm)
ø 40	50, 75, 100, 150, 200, 250, 300, 350, 400, 450, 500	600	1600	1
ø 50			2000	
ø 63			2500 *2	
ø 80		700		
ø100		800		
ø125	50, 75, 100, 150, 200, 250, 300		2000	
ø140				
ø160				
ø180		900		

*1 : If max. stroke length is exceeded, product specifications may not be met, depending on the conditions. Refer to Ending Page 69.
The custom stroke length is available in 1 mm increments.
*2 : The max. stroke length available for ø63 to ø100 bore size models with bellows is 2000 mm.

LCM
LCR
LCG
LCW
LCX
STM
STG
STS/STL
STR2
UCA2
ULK*
JSK/M2
JSG
JSC3/JSC4
USSD
UFCD
USC
UB
JSB3
LMB
LML
HCM
HCA
LBC
CAC4
UCAC2
CAC-N
UCAC-N
RCS2
RCC2
PCC
SHC
MCP
GLC
MFC
BBS
RRC
GRC
RV3*
NHS
HRL
LN
Hand
Chuk
MecHnd/Chuk
ShkAbs
FJ
FK
SpdContr
Ending

Cylinder weight

● JSC3(ø40 to ø100)

[Unit: kg]

Item/mounting / Bore size (mm)	Product weight when stroke length (S) = 0 mm						Additional weight per S = 100 mm
	Basic (00)	Foot (LB)	Flange (FA, FB)	Eye bracket (CA)	Clevis bracket (CB)	Trunnion (TC)	
ø40	2.48	2.66	2.91	2.83	2.83	2.86	0.39
ø50	3.47	3.67	3.97	3.87	3.87	3.97	0.46
ø63	5.09	5.49	6.19	5.79	5.79	5.89	0.50
ø80	8.15	8.85	9.95	9.65	9.65	9.45	0.90
ø100	14.70	15.70	17.40	16.90	16.90	17.30	1.12

(Example) Product weight of JSC3-T-LB-50B-200

Product weight for stroke length 0 mm ..... 3.67 kg
Additional weight for stroke length 200 mm ..... $0.46 \times \frac{200}{100} = 0.92$ kg
Product weight ..... 3.67 kg + 0.92 kg = 4.59 kg

● JSC4(ø125 to ø180)

(Unit: kg)

Item/mounting / Bore size (mm)	Product weight when stroke length (S) = 0 mm					Additional weight per S = 100 mm
	Axial foot (LB)	Flange (FA/FB)	Eye bracket (CA)	Clevis bracket (CB)	Trunnion (TA/TB/TC)	
ø125	25.72	27.52	27.22	27.32	27.62	1.54
ø140	32.95	36.35	34.75	34.95	34.15	1.78
ø160	42.85	46.65	44.75	45.05	46.15	2.22
ø180	61.55	69.05	64.45	64.95	65.15	2.96

(Example) Product weight of JSC4-T-LB-125B-300

● Product weight when S = 0 mm ..... 25.72 kg
● Additional weight when S = 300 mm $1.54 \times \frac{300}{100} = 4.62$ kg
● Product weight ..... 25.72 + 4.62 = 30.34 kg

Theoretical thrust table

(Unit: N)

Bore size (mm)		Operating direction	Working pressure MPa										
			0.1	0.15	0.2	0.3	0.4	0.5	0.6	0.7	0.8	0.9	1.0
JSC3	ø40	Push	1.26×10^2	1.88×10^2	2.51×10^2	3.77×10^2	5.03×10^2	6.28×10^2	7.54×10^2	8.80×10^2	1.01×10^3	1.13×10^3	1.26×10^3
		Pull	1.06×10^2	1.58×10^2	2.11×10^2	3.17×10^2	4.22×10^2	5.28×10^2	6.33×10^2	7.39×10^2	8.44×10^2	9.50×10^2	1.06×10^3
	ø50	Push	1.96×10^2	2.95×10^2	3.93×10^2	5.89×10^2	7.85×10^2	9.82×10^2	1.18×10^3	1.37×10^3	1.57×10^3	1.77×10^3	1.96×10^3
		Pull	1.65×10^2	2.47×10^2	3.30×10^2	4.95×10^2	6.60×10^2	8.25×10^2	9.90×10^2	1.15×10^3	1.32×10^3	1.48×10^3	1.65×10^3
	ø63	Push	3.12×10^2	4.68×10^2	6.23×10^2	9.35×10^2	1.25×10^3	1.56×10^3	1.87×10^3	2.18×10^3	2.49×10^3	2.81×10^3	3.12×10^3
		Pull	2.80×10^2	4.20×10^2	5.61×10^2	8.41×10^2	1.12×10^3	1.40×10^3	1.68×10^3	1.96×10^3	2.24×10^3	2.52×10^3	2.80×10^3
	ø80	Push	5.03×10^2	7.54×10^2	1.01×10^3	1.51×10^3	2.01×10^3	2.51×10^3	3.02×10^3	3.52×10^3	4.02×10^3	4.52×10^3	5.03×10^3
		Pull	4.54×10^2	6.80×10^2	9.07×10^2	1.36×10^3	1.81×10^3	2.27×10^3	2.72×10^3	3.17×10^3	3.63×10^3	4.08×10^3	4.54×10^3
	ø100	Push	7.85×10^2	1.18×10^3	1.57×10^3	2.36×10^3	3.14×10^3	3.93×10^3	4.71×10^3	5.50×10^3	6.28×10^3	7.07×10^3	7.85×10^3
		Pull	7.15×10^2	1.07×10^3	1.43×10^3	2.14×10^3	2.86×10^3	3.57×10^3	4.29×10^3	5.00×10^3	5.72×10^3	6.43×10^3	7.15×10^3
JSC4	ø125	Push	1.23×10^3	1.84×10^3	2.45×10^3	3.68×10^3	4.91×10^3	6.14×10^3	7.36×10^3	8.59×10^3	9.82×10^3	1.10×10^4	1.23×10^4
		Pull	1.13×10^3	1.70×10^3	2.26×10^3	3.39×10^3	4.52×10^3	5.65×10^3	6.79×10^3	7.92×10^3	9.05×10^3	1.02×10^4	1.13×10^4
	ø140	Push	1.54×10^3	2.31×10^3	3.08×10^3	4.62×10^3	6.16×10^3	7.70×10^3	9.24×10^3	1.08×10^4	1.23×10^4	1.39×10^4	1.54×10^4
		Pull	1.44×10^3	2.16×10^3	2.89×10^3	4.33×10^3	5.77×10^3	7.22×10^3	8.66×10^3	1.01×10^4	1.15×10^4	1.30×10^4	1.44×10^4
	ø160	Push	2.01×10^3	3.02×10^3	4.02×10^3	6.03×10^3	8.04×10^3	1.01×10^4	1.21×10^4	1.41×10^4	1.61×10^4	1.81×10^4	2.01×10^4
		Pull	1.88×10^3	2.83×10^3	3.77×10^3	5.65×10^3	7.54×10^3	9.42×10^3	1.13×10^4	1.32×10^4	1.51×10^4	1.70×10^4	1.88×10^4
	ø180	Push	2.54×10^3	3.82×10^3	5.09×10^3	7.03×10^3	1.02×10^3	1.27×10^4	1.53×10^4	1.78×10^4	2.04×10^4	2.29×10^4	2.54×10^4
		Pull	2.39×10^3	$3.58+10^3$	4.77×10^3	7.16×10^3	9.54×10^3	1.19×10^4	1.43×10^4	1.67×10^4	1.91×10^4	2.15×10^4	2.39×10^4

LCM
LCR
LCG
LCW
LCX
STM
STG
STS/STL
STR2
UCA2
ULK*
JSK/M2
JSG
JSC3/JSC4
USSD
UFCD
USC
UB
JSB3
LMB
LML
HCM
HCA
LBC
CAC4
UCAC2
CAC-N
UCAC-N
RCS2
RCC2
PCC
SHC
MCP
GLC
MFC
BBS
RRC
GRC
RV3*
NHS
HRL
LN
Hand
Chuk
MecHnd/Chuk
ShkAbs
FJ
FK
SpdContr
Ending

How to order (ø40 to ø100)

Without switch

JSC3 - ◯ T - LB - 40 ◯ B - 50 - S I

- JSC3: Model No.
- ◯: Ⓐ Brake release pressure
- LB: Ⓑ Mounting *1
- 40: Ⓒ Bore size
- ◯: Ⓓ Port thread
- B: Ⓔ Cushion
- 50: Ⓕ Stroke length *2 *3
- S: Ⓖ Option *4
- I: Ⓗ Accessory *6

Code	Description
Ⓐ Brake release pressure	
Blank	Standard (0.3 MPa)
S	Low pressure release (0.25 MPa)

Ⓑ Mounting	
00	Basic
LB	Axial foot
FA	Rod side flange
FB	Head side flange
FC	Head side special flange
CA	Eye bracket
CB	Clevis bracket (pin and snap ring attached)
TC	Intermediate trunnion
TA	Rod side trunnion
TB	Head side trunnion

Ⓒ Bore size (mm)	
40	ø40
50	ø50
63	ø63
80	ø80
100	ø100

Ⓓ Port thread	
Blank	Rc thread
N	NPT thread (made-to-order product)
G	G thread (made-to-order product)

Ⓔ Cushion	
B	Both sides cushioned
R	Rod side cushioned
H	Head side cushioned
N	Without cushion

Ⓕ Stroke length (mm)

Bore size	Stroke length	Available stroke length	Custom stroke length
ø40	**1 to 600**	**1600**	**In 1 mm increments**
ø50	**1 to 600**	**2000**	
ø63	**1 to 600**	**2500**	
ø80	**1 to 700**	**2500**	
ø100	**1 to 800**	**2500**	

Ⓖ Option

		Max. ambient temperature	instantaneous max. temp
L	Bellows	250°C	400°C
M	Piston rod material (stainless steel)		
Blank	Cushion needle position R (standard)		
S	Cushion needle position S		
T	Cushion needle position T		
G	With indicator		

Ⓗ Accessory	
I	Rod eye
Y	Rod clevis (pin and snap ring attached)
B1	Eye bracket
B2	Clevis bracket (pin and snap ring attached)
B3	Eye bracket
B4	Trunnion No. 2 bracket (2 pcs./set)

⚠ Precautions for model No. selection

*1 : Mounting bracket will be shipped assembled with the product. (Head side special flange is attached separately)
*2 : If the stroke exceeds the max. stroke length, refer to Ending Page 69.
*3 : The max. stroke length available for ø63 to ø100 bore size models with bellows is 2000 mm.
*4 : For S, T, and G position indications, check the respective dimensions.
*5 : Refer to Ending Page 85 for custom specifications of rod end form.
*6 : "I" and "Y" cannot be selected together.

[Example of model No.]

JSC3-T-LB-40B-50-SI

Model: Brake cylinder double acting/heat resistance

Ⓐ Brake release pressure	: Standard 0.3 MPa
Ⓑ Mounting	: Axial foot
Ⓒ Bore size	: ø40 mm
Ⓓ Port thread	: Rc thread
Ⓔ Cushion	: Both sides cushioned
Ⓕ Stroke length	: 50 mm
Ⓖ Option	: Cushion needle position S
Ⓗ Accessory	: Rod eye

How to order mounting bracket (ø40 to ø100)

Bore size (mm) / Mounting bracket	ø40	ø50	ø63	ø80	ø100
Foot (LB) *1	JSC3-40-LB	JSC3-50-LB	JSC3-63-LB	JSC3-80-LB	JSC3-100-LB
Flange (FB)	JSC3-40-FB	JSC3-50-FB	JSC3-63-FB	JSC3-80-FB	JSC3-100-FB
Eye bracket (CA)	S1-CA-40	S1-CA-50	S1-CA-63	S1-CA-80	S1-CA-100
Clevis bracket (CB) *2	S1-CB-40	S1-CB-50	S1-CB-63	S1-CB-80	S1-CB-100

*1: The foot mounting bracket is provided as 2 pcs./set.
*2: A pin and a snap ring are attached.
*3: All mounting brackets have mounting bolts attached.

LCM
LCR
LCG
LCW
LCX
STM
STG
STS/STL
STR2
UCA2
ULK*
JSK/M2
JSG
JSC3/JSC4
USSD
UFCD
USC
UB
JSB3
LMB
LML
HCM
HCA
LBC
CAC4
UCAC2
CAC-N
UCAC-N
RCS2
RCC2
PCC
SHC
MCP
GLC
MFC
BBS
RRC
GRC
RV3*
NHS
HRL
LN
Hand
Chuk
MecHnd/Chuk
ShkAbs
FJ
FK
SpdContr
Ending

How to order (ø125 to ø180)

JSC4-T - LB - 125 ◯ B - 50 - S ◯

Ⓐ Mounting *1

Ⓑ Bore size

Ⓒ Port thread

Ⓓ Cushion

Ⓔ Stroke length

Ⓕ Option

Ⓖ Accessory *4

Code	Description
Ⓐ Mounting	
LB	Axial foot
FA	Rod side flange
FB	Head side flange
CA	Eye bracket
CB	Clevis bracket (pin and snap ring attached)
TC	Intermediate trunnion
TA	Rod side trunnion
TB	Head side trunnion

Ⓑ Bore size (mm)	
125	ø125
140	ø140
160	ø160
180	ø180

Ⓒ Port thread	
Blank	Rc thread
N	NPT thread (made-to-order product)
G	G thread (made-to-order product)

Ⓓ Cushion	
B	Both sides cushioned
R	Rod side cushioned
H	Head side cushioned
N	Without cushion

Ⓔ Stroke length (mm)

Bore size	Stroke length	Available stroke	Custom stroke
ø125	**1 to 800**	**2000**	**In 1 mm increments**
ø140	**1 to 800**	**2000**	
ø160	**1 to 800**	**2000**	
ø180	**1 to 900**	**2000**	

Ⓕ Option

		Max. ambient temp.	instantaneous max. temp
L	Bellows	250°C	400°C
M	Piston rod material (stainless steel)		
*3 **Blank**	Cushion needle position (standard)	Standard	
R	Cushion needle position R	T R	
S	Cushion needle position S	S	
T	Cushion needle position T		
C2	With cushion section check valve		

Ⓖ Accessory	
I	Rod eye
Y	Rod clevis (pin and snap ring attached)
B1	Eye bracket
B2	Clevis bracket

⚠ Precautions for model No. selection

*1 : Mounting bracket will be shipped assembled with the product.
*2 : When selecting TA or TB as mounting, the switch quantity is limited to "H" (1 on head side) for TA, and "R" (1 on rod side) for TB.
*3 : Check the figures below for the cushion needle position indication.
*4 : "I" and "Y" cannot be selected together.

[Example of model No.]

JSC4-T-LB-125B-50-SI

Model: Brake cylinder double acting/heat resistance

Ⓐ Mounting : Axial foot
Ⓑ Bore size : ø125 mm
Ⓒ Port thread : Rc thread
Ⓓ Cushion : Both sides cushioned
Ⓔ Stroke length : 50 mm
Ⓕ Option : Cushion needle position S
Ⓖ Accessory : Rod eye

Cushion needle position (needle position from rod direction with the port on the top side)

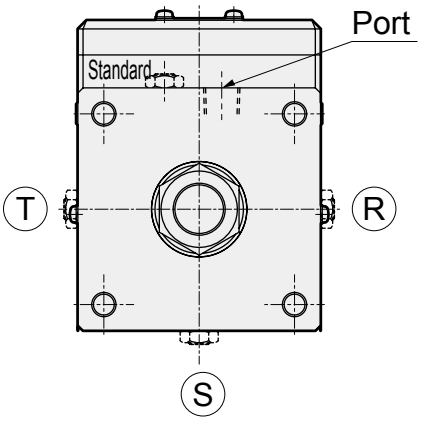

Certified class 2 pressure vessel stroke length

Bore size	Stroke length
ø160	1948 or more
ø180	1526 or more

LCM
LCR
LCG
LCW
LCX
STM
STG
STS/STL
STR2
UCA2
ULK*
JSK/M2
JSG
JSC3/JSC4
USSD
UFCD
USC
UB
JSB3
LMB
LML
HCM
HCA
LBC
CAC4
UCAC2
CAC-N
UCAC-N
RCS2
RCC2
PCC
SHC
MCP
GLC
MFC
BBS
RRC
GRC
RV3*
NHS
HRL
LN
Hand
Chuk
MecHnd/Chuk
ShkAbs
FJ
FK
SpdContr
Ending

Internal structure and parts list (ø40 to ø100)

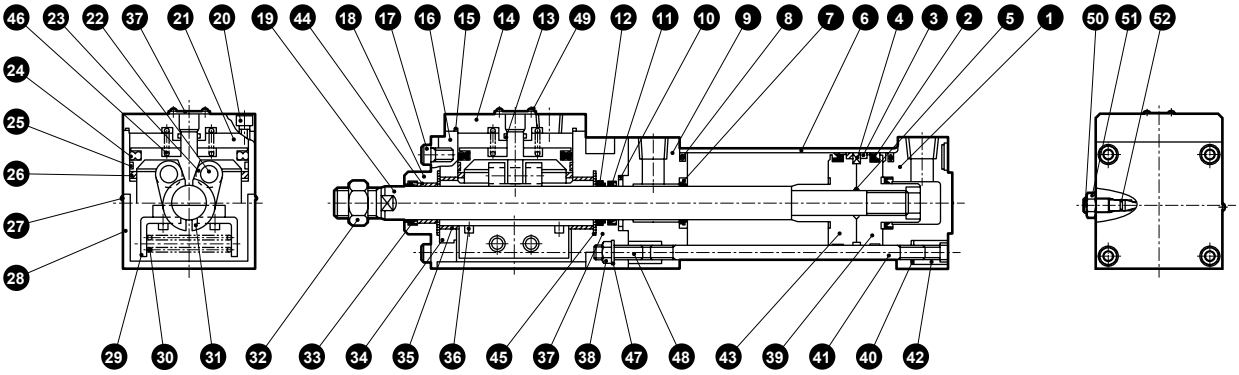

Brake section cannot be disassembled

No.	Part name	Material	Remarks	No.	Part name	Material	Remarks
1	Head cover	Aluminum alloy die-casting	Paint	28	Cover	Steel	Paint
2	Piston packing	Fluoro rubber		29	Spring holder	Steel	Zinc chromate
3	Wear ring	Tetrafluoroethylene resin		30	Spring	Steel	
4	Piston ring	Steel		31	Brake shoe metal	Cast iron	Nickeling
5	Piston gasket	Fluoro rubber		32	Rod nut	Steel	Zinc chromate
6	Cylinder tube	Aluminum alloy	Hard alumite	33	Dust wiper	Fluoro rubber	
7	Cushion packing	Fluoro rubber, steel		34	DU ring	Steel	Black finish
8	Cylinder gasket	Fluoro rubber		35	Bush	Oil impregnated bearing alloy	
9	Rod cover	Aluminum alloy die-casting	Paint	36	Hexagon socket head cap screw	Alloy steel	Black finish
10	Metal seal	Fluoro rubber		37	Dust cover	Aluminum alloy	Paint
11	Rod packing	Fluoro rubber		38	Hexagon nut	Steel	Black finish
12	Dust wiper	Fluoro rubber		39	Piston H	Aluminum alloy die-casting	
13	Cap gasket A	Fluoro rubber		40	Tie rod	Steel	Zinc chromate
14	Body cap	Cast iron	Nitriding	41	Conical spring washer	Steel	Black finish
15	Cap gasket B	Fluoro rubber		42	Round nut	Steel	Zinc chromate
16	Brake body	Aluminum alloy casting	Alumite	43	Piston R	Aluminum alloy die-casting	
17	Hexagon socket head cap screw	Alloy steel	Black finish	44	Bush B	Oil impregnated bearing alloy	
18	Rod metal	Steel	Manganese phosphate	45	Thrust washer		
19	Piston rod	Steel	Industrial chrome plating	46	Spring	Steel	Paint
20	Hexagon socket head cap screw	Alloy steel	Black finish	47	Toothed washer	Steel	Black finish
21	Brake piston	Cast iron	Manganese phosphate	48	Hexagon socket set screw	Steel	Black finish
22	Parallel pin	Steel		49	Phillips pan head machine screw/captive washer	Steel	Zinc chromate
23	Bearing			50	Cushion needle	Copper alloy	Nickeling
24	Piston packing B	Fluoro rubber		51	Needle nut	Copper alloy	Nickeling
25	Wear ring	Special resin		52	Needle gasket	Fluoro rubber	
26	Cushion rubber	Fluorosilicone rubber					
27	Phillips pan head machine screw	Steel	Zinc chromate				

Note: Never disassemble the brake section, as the powerful spring installed can be dangerous.

Repair parts list

Bore size (mm)	Kit No.	Repair parts No.
ø40	JSC3-T-40K	2 3 7 8 10 11 12 33 52
ø50	JSC3-T-50K	
ø63	JSC3-T-63K	
ø80	JSC3-T-80K	
ø100	JSC3-T-100K	

Note: Specify the kit No. when placing an order.

Internal structure and parts list (ø125 to ø180)

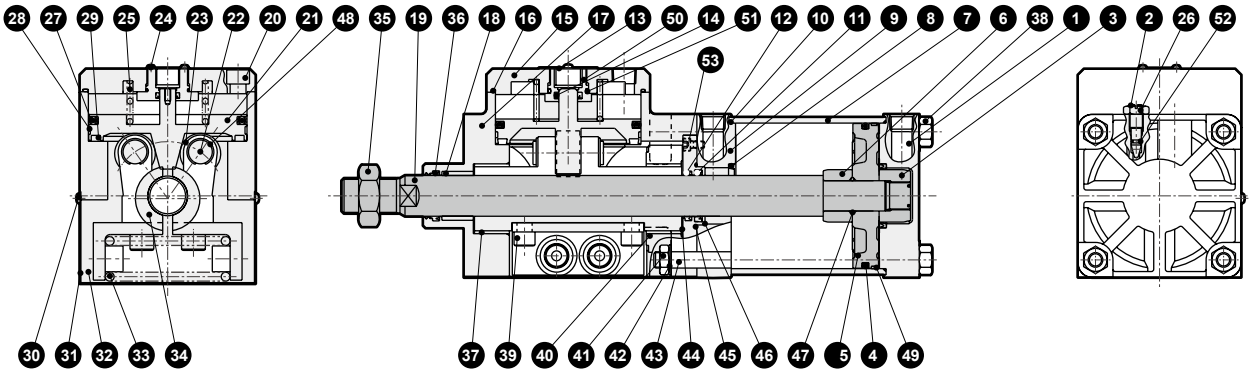

Brake section cannot be disassembled

No.	Part name	Material	Remarks	No.	Part name	Material	Remarks
1	Head cover	Aluminum alloy casting	Chromate	27	Piston packing B	Fluoro rubber	
2	Cushion needle	Copper alloy		28	Wear ring	Acetal resin	
3	Cushion ring A	Steel	Zinc chromate	29	Cushion rubber	Silicone rubber	
4	Piston packing	Fluoro rubber		30	Cross-recessed pan head machine screw	Steel	Zinc chromate
5	Piston	Aluminum alloy casting		31	Cover	Steel	Paint
6	Cushion ring B	Steel	Zinc chromate	32	Spring holder	Steel	Manganese phosphate
7	Cylinder tube	Aluminum alloy	Hard alumite	33	Spring	Steel	Black finish
8	Cushion packing	Fluoro rubber/steel		34	Brake shoe metal	Cast iron	Nickeling
9	Rod cover	Aluminum alloy casting	Chromate	35	Rod nut	Steel	Zinc chromate
10	Cylinder gasket	Fluoro rubber		36	Dust wiper	Fluoro rubber	
11	Rod packing	Fluoro rubber		37	Bush A	Oiles drymet	
12	Dust wiper	Fluoro rubber		38	Hexagon nut	Steel	Zinc chromate
13	Dust cover	Aluminum alloy	Alumite	39	Hexagon socket head cap screw	Alloy steel	Black finish
14	Rod packing	Fluoro rubber		40	Ring	Steel	Black finish
15	Body cap	Aluminum alloy casting	Black alumite	41	Hexagon nut	Steel	Zinc chromate
16	Cap gasket	Fluoro rubber		42	Toothed washer	Steel	Zinc chromate
17	Brake body	Aluminum cast iron	Alumite	43	Tie rod	Steel	Zinc chromate
18	Bush B	Oil impregnated bearing alloy		44	Thrust washer	Steel	
19	Piston rod	Steel	Industrial chrome plating	45	Metal gasket	Fluoro rubber	
20	Hexagon socket head cap screw	Alloy steel	Black finish	46	Rod metal	Cast iron	Zinc chromate
21	Brake piston	Cast iron	Manganese phosphate	47	Piston gasket	Fluoro rubber	
22	Bearing pin	Steel		48	E type snap ring	Steel	Zinc chromate
23	Bearing	-		49	Wear ring	Fiber-reinforced phenolic resin	
24	Phillips pan head machine screw/captive washer	Steel	Zinc chromate	50	Body cap	Cast iron	Manganese phosphate
25	Spring	Steel	Paint	51	O-ring	Fluoro rubber	
26	Needle nut	Steel	Zinc chromate	52	Needle gasket	Fluoro rubber	
				53	Hexagon socket head cap screw	Steel	Black finish

Repair parts list

Bore size	Kit No.	Repair parts No.
ø125	JSC4-T-125K	4 8 10 11 12 36 45 49 52
ø140	JSC4-T-140K	
ø160	JSC4-T-160K	
ø180	JSC4-T-180K	

Dimensions

- Dimensions of bore sizes ø40 to ø100 are the same as those of JSC3 (double acting/single rod). Refer to pages 784 to 793.
- Dimensions of bore sizes ø125 to ø180 are the same as those of JSC4-N (double acting/no-lubrication). Refer to pages 796 to 803.

* Related product selection guide

Overrun distance and stopping accuracy differ depending on the used valve. Use the following related products.

Model	Related products / Bore size (mm)	SOL-1	SOL-2	Reverse regulator	Speed controller	Silencer	Piping
JSM2 JSK2	ø20	4GB150R-06	3GA110R	R1100-6-W 2419-1C	SC3W-6-6 SC3R-6 SC1-6	SLW-6A	ø6×ø4 Nylon tube
JSK2	ø25	4GB150R-06	3GA110R	R1100-6-W 2419-1C	SC3W-6-6 SC3R-6 SC1-6	SLW-6A	ø6×ø4 Nylon tube
JSM2	ø30	4GB150R-06 4GA210R-06 4GB250R-06	3GA110R	R1100-6-W 2419-1C	SC3W-6-6 SC3R-3-6 SC1-6	SLW-6A	ø6×ø4 Nylon tube
JSK2	ø32	4GB150R-06 4GA250R-06 4GB250R-06	B5136	R1100-6-W 2419-1C	SC3W-6-6 SC3R-3-6 SC1-6	SLW-6A	ø6×ø4 Nylon tube
JSM2 JSK2	ø40	4GA250R-06 4GB250R-06	4GA110R-06 4GB110R-06	R1100-6-W 2419-1C	SC3W-6-8 SC3R-6 SC1-6	SLW-6A	ø8×ø5.7 Nylon tube
JSC3	ø40	4GB250R-08 4GB350R-08 PV5G-6-FIG-D-1-A02	4GA210R-06 4GB210R-06	R3100-8-W R2100-8-W	SC3W-8-8 SC3R-8 SC1-8	SLW-8A	ø8×ø5.7 Nylon tube
	ø50	4GA350R-08 4GB350R-10 PV5G-6-FIG-D-1-A03	4GA210R-06 4GB210R-08	R3100-10-W R2100-10-W	SC3W-10-10 SC3R-10 SC1-10	SLW-10A	ø10×ø7.2 Nylon tube
	ø63	4GB350R-08 4GB350R-10 PV5G-6-FIG-D-1-A03	4GA210R-06 4GB210R-08	R4100-10-W	SC3W-10 SC3R-10 SC1-10	SLW-10A	ø10×ø7.2 Nylon tube
	ø80	4GB450-15 PV5G-8-FIG-D-1-A04	4GA210R-06 4GB210R-08	R4100-15-W	SC3W-15-12 SC3R-15 SC1-15	SLW-15A	ø12×ø8.9 Nylon tube
	ø100	4GB450-15 PV5G-8-FIG-D-1-A04	4GB310R-10	R4100-15-W	SC3W-15-12 SC3R-15 SC1-15	SLW-15A	ø12×ø8.9 Nylon tube
JSC4	ø125	4GB450-15 PV5G-8-FIG-D-1-A04	4GB310R-10 4F310R-10	R4100-15-W	SC3R-15 SC1-15	SLW-15A	ø12 rubber hose SGP3/8B SGP1/2B
	ø140	4F650-20	4GB310R-10 4F310R-10	R4100-15-W-A20W R6100-20-W	SC-20A	SL-20A	ø19 rubber hose SGP1/2B SGP3/4B
	ø160	4F650-20 4F750-20	4GB310R-10 4F310R-10	R4100-15-W-A20W R6100-20-W	SC-20A	SL-20A	ø19 rubber hose SGP1/2B SGP3/4B
	ø180	4F750-20	4GA410-10 4GB410-10 4F310-10	R4100-15-W-A20W R6100-20-W	SC-20A	SL-20A	ø19 rubber hose SGP1/2B SGP3/4B

● *1: JSC3-V is assembled with a brake release valve (SOL2).

Applications

This product can be used with devices and equipment requiring the following of functions.

1 When multipoint positioning is required (transfer/positioning)

The equipment can be accurately stopped at several required positions.

2 When position locking is required

The brakes can be applied and held instantly when the air source or power is turned OFF (during power failure or accident), preventing equipment damage and securing safety.

3 When emergency stop is required

The cylinder can be immediately stopped with electric signals, etc., when a worker enters a hazardous area.

4 Workpiece lock

When locking the workpiece to the jig or mounting base, etc., it can be locked even if there is no pneumatic source or power. The workpiece can be transferred while locked to the jig.

Applications

1 Linear multipoint welding

When welding steel plates, etc., linearly at several points, this cylinder can be used to move and position the slide table or welding gun.

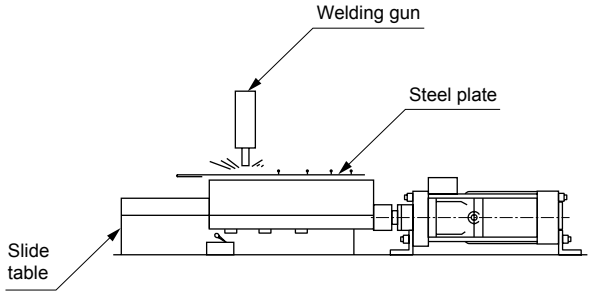

4 Movement to conveyor

Move products to the conveyor one at a time.

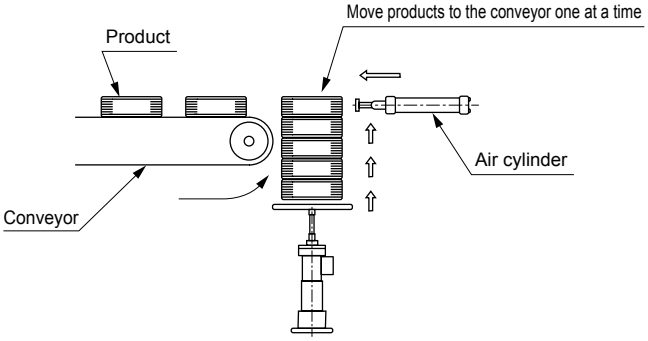

2 Position locking

If there is a load in the vertical direction and the load could fall under its own weight when the pressure source is cut off, the brakes will be applied to prevent falling.

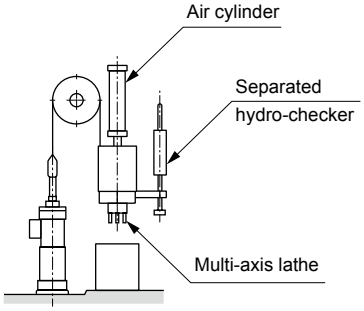

5 When several cylinders with different strokes are required

When different-sized products are in motion on a conveyor, etc., in many cases the stroke length for the cylinders set there must also be changed. Using the brake cylinder, a cylinder compatible with different strokes is created electrically.

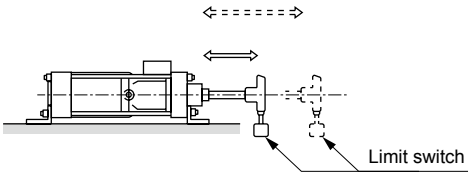

3 Workpiece lock

When locking the workpiece to the jig, etc., if the brake cylinder is used, it will be locked even when the pneumatic source or power is OFF.

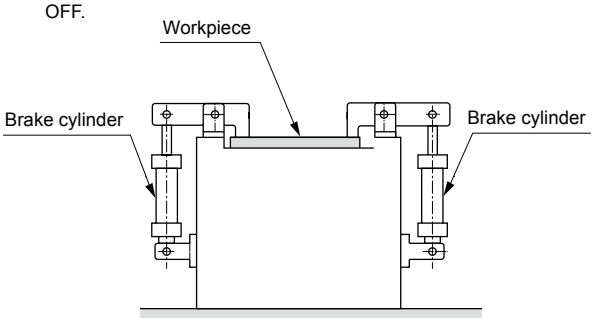

6 Hopper open/close

In the case where a hopper must be closed at a specific weight in powder manufacturing, accurate measurement is obtained by stopping the hopper, measuring it accurately and then completely closing it.

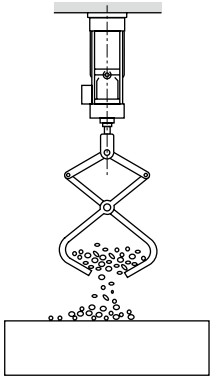

Safety Precautions

Be sure to read this section before use.

Refer to Intro Page 73 for general information of the cylinder, and to Intro Page 80 for general information of the cylinder switch.

Product-specific cautions: Brake cylinder JSC3/JSC4 Series

Design/selection

1. Common

⚠ WARNING

■ Design a structure that prevents person(s) from coming into contact with the driven workpiece as well as the moving parts of the cylinder with brakes.
Provide a protective cover so that no human body directly touches the unit. In case of possible contact, provide safety measures such as a sensor for emergency stop before making contact and a buzzer to warn of danger.

■ Use a balanced circuit that accommodates the protrusion of the piston rod.
If the cylinder is stopped part-way in the stroke with the brake, etc., and air pressure is applied to one side of the cylinder, the piston rod will pop out at high speeds when the brake is released. This could cause physical harm, such as pinched hands or feet, or mechanical damage. Use a balance circuit, such as the basic circuit, to prevent popping out.
When using a low hydraulic brake cylinder, the brake section should always be operated by air pressure.

■ The holding force (max. static load) is the ability to hold static load that is not accompanied by vibration or shock, in a state where the brake is operating under no load.
Take care when constantly using near the upper limit of the holding force.

■ Do not apply loads with impact, strong vibration, or torque while brakes are activated.
If load is externally applied with impact, or if strong vibration or rotational force is externally applied, the holding force can be reduced, creating a dangerous situation.

■ Consider the stopping accuracy and overrun distance during the braking.
Because a mechanical lock is applied, the cylinder does not stop instantly when the stop signal is issued, but stops with a time-wise delay. The stroke at which the cylinder slides due to this delay is the overrun distance. The max. and min. width of the overrun distance is the stopping accuracy.
- To achieve the required stop position, move the limit switch forward by the overrun distance.
- The limit switch must have a detection length (dog length) of the overrun distance + α.
- The operating range of CKD cylinder switches is 7 to 16 mm, depending on the switch model. . If overrun distance exceeds this, provide self-holding of the contact at the switch load.

■ In order to improve stopping accuracy, ensure that the brake stops the cylinder as soon as possible after receiving the stop signal.
Use a high response DC control electricity circuit or valve, and set the valve as close to the cylinder as possible.

■ The stopping accuracy is susceptible to fluctuations in piston speed.
If the piston speed changes due to load fluctuations or by some disturbance while the cylinder is moving, the stopping position may vary sharply. Make sure that the piston speed stays the same up to just before the stop position. Since the speed changes significantly in the cushioned range and in the acceleration range after starting operation, the variability of the stopping position will increase.
The stopping accuracy with a piston speed of 300 mm/s with no load is ±1.0 mm (reference value). This value differs based on the device used. For more information, refer to the page on stopping accuracy and overrun.

■ Basic circuit
Always adopt the following circuit even for position locking and emergency stop applications. A 2-position valve cannot be used because it affects the brake section even when the cylinder thrust is stopped.
Maintain thrust and load balance with the following circuit.
Brakes may not be released when load is applied to brakes.

- Horizontal load
When piping is as shown in Fig. 1, equal pressure is applied to both ends of the piston when stopped to prevent the rod from popping out when the brakes are released. Install a regulator with check valve on the head side to maintain thrust balance.

Fig. 1

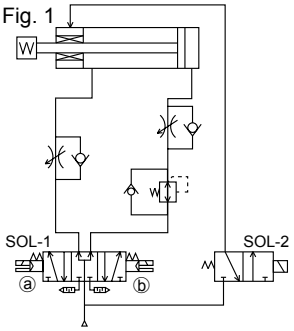

ⓐSOL-1ⓑ		SOL-2	Operational status
OFF	OFF	OFF	Stop
ON	OFF	ON	Reverse
OFF	ON	ON	Forward

- For downward vertical load
If load faces downward as shown in Fig. 2, the rod malfunctions in the load direction when brakes are released. Place a regulator with a check valve on the head side to reduce thrust in the load direction and balance the load.

Fig. 2

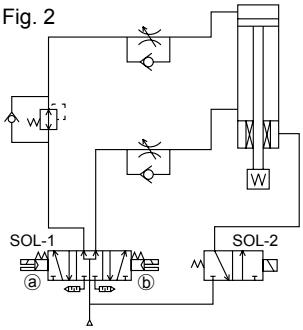

ⓐSOL-1ⓑ		SOL-2	Operational status
OFF	OFF	OFF	Stop
ON	OFF	ON	Drop
OFF	ON	ON	Rise

- For upward vertical load
If load faces upward as shown in Fig. 3, the rod malfunctions in the load direction when brakes are released. Place a regulator with a check valve on the rod side to reduce thrust in the load direction and balance the load.

Fig. 3

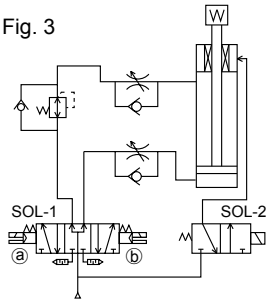

ⓐSOL-1ⓑ		SOL-2	Operational status
OFF	OFF	OFF	Stop
ON	OFF	ON	Drop
OFF	ON	ON	Rise

■ Do not use multiple synchronized cylinders with brakes. If the synchronization deviates, load is concentrated on the cylinder where the brake was applied first, risking shortened service life or damage.

■ Do not apply torque to the rod when braking, as the holding force will decrease, creating hazardous conditions. Also, use this product in mechanisms in which the rod does not rotate.

■ Do not apply to the cylinder any force that exceeds the brake holding force listed in the catalog.

⚠ CAUTION

■ Stopping accuracy

● Stopping pitch and load factor

Stopping accuracy differs with stopping pitch and load factor. The load factor below is recommended for achieving stopping accuracy.

*Stopping position reference value: ±1.0 (300 mm/s, no load)

Stop pitch	Load factor	
	JSC3-*	JSC3-S*
50 mm or less	20% of thrust	15% of thrust
50 mm to 100 mm	40% of thrust	30% of thrust
100 mm or more	60% of thrust	45% of thrust

● Selection of valve for brake

The stopping accuracy and overrun distance will change according to the responsiveness of the brake valve. Refer to the JSC3-V electric specification for brake valve and select from the CKD pneumatic valve 4GB2 Series. Connect the valve directly to the brake port to improve stopping accuracy.

● When using a PLC (programmable controller)

If a PLC (programmable controller) is used as the electrical control unit for the valve for brake, stopping accuracy drops due to scan time (computing time). When using a PLC, do not assemble the valve for brake into the PLC circuit.

■ Do not make major changes in applied load when stopped with brakes, or the stopping position may change.

2. Low hydraulic JSC3-H/JSC4-H

⚠ WARNING

■ If the load fluctuates during the stroke, use the JSC3-H and a converter.

Fig. 4

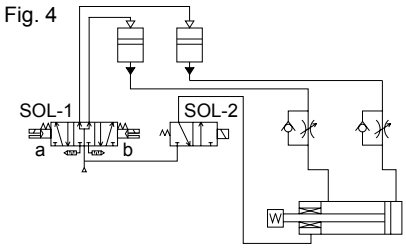

■ Release brakes before cylinder operation. The brake may not be released when the cylinder is operating at high speed.

■ If back pressure is applied to the locking mechanism, the lock may be released. Use the brake release valve as a single unit, or use an individual exhaust manifold.

■ Use a 3-position P/A/B connection (pressurization on both sides) valve for the cylinder drive to prevent the piston from popping out when starting.

■ To maintain balance of the thrust, including the load, the side with the larger thrust should have a regulator with a check valve.

⚠ CAUTION

■ This product is a pneumatic cylinder which enables the use of hydraulic fluid as its working fluid.
Not compliant with JIS standards on activation and leak inspection for hydraulic cylinders.

3. Low pressure release JSC3-S

⚠ CAUTION

■ Note that brake holding force is also reduced due to release pressure reduction.

Mounting, installation and adjustment

1. Common

⚠ WARNING

■ Release brakes before coupling the load to the end of the rod.
If coupled while brakes are applied, torque or load exceeding holding force may be applied to the piston rod and damage the brake mechanism.

■ If the brake is released while air is applied to only one side of the cylinder, the piston rod can pop out at high speed, creating a dangerous situation.
When releasing the brake during adjustment or other maintenance, always observe the following:

● Check that no one is in the movable range of the load and that no problems will arise if the load moves when brakes are released.

● When releasing the brake, perform position locking or take other measures:
·Place the load to the bottom end
·Pressurize both sides
·Place a strut
to prevent the load from falling.

● Confirm that air is not pressured on only one side of the cylinder when releasing brakes.

■ How to manually release the brake

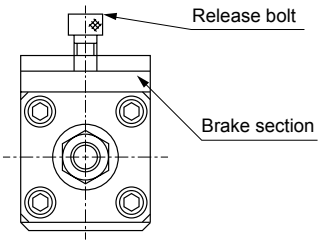

Note: How to release the brake

● The brakes are released by completely screwing the release bolt (attached with product) into the female threads (brake release port) on the top of the brakes. (For cylinders with a bore size of ø125 and over, the brake can be released by turning the release bolt 2 to 3 times.) (Always remove the release bolt during normal use.)

● To manually release the brake, always use the release bolt attached with the product. The brakes could be damaged when other bolts are used. Follow the optimum screw-in volume shown below when using a regular bolt.

Bore size	Size		Appropriate screw-in volume
	JSC3	JSC3-V	
ø40/ø50	M10×8	M10×29	4 rotations or less
ø63	M12×9	M12×30	
ø80	M14×10	M14×31	
ø100	M16×12	M16×40	
ø125	M24 x 16 or higher		2 to 3 rotations
ø140	M24 x 20 or higher		
ø160	M24 x 20 or higher		
ø180	M24 x 24 or higher		

- Brakes are released manually or by pressurizing the brake release port. When mounting the load, the brake release operation may cause the load to fall; make sure to check that the brake is operational when the manual release operation is set to default or when there is no air in the brake release port.
- Do not apply torque to the rod when braking, as the holding force will decrease, creating hazardous conditions. Also, use this product in mechanisms in which the rod does not rotate.
- Do not apply to the cylinder any force that exceeds the brake holding force listed in the catalog.
- If there is any play, such as looseness, in the brake signal dog, stopping accuracy is affected. Securely fix to eliminate play, etc.
- If the piston speed is fast, the detection dog must be long enough to match relay response time. If the dog is short, the stop signal is not output and operation does not stop.

⚠ CAUTION

- Adjust the air balance in the cylinder.
  With brakes released, place a load on the cylinder and balance the load by adjusting pneumatic pressure applied to the cylinder rod side and head side. Malfunctions such as piston popping out during brake release or abnormal brake release can be prevented by accurately balancing the load.
- Adjust the installation position of the detector parts, including the cylinder switch.
  When braking, consider the overrun distance vis-a-vis the desired stop position and adjust the installation positions for detector parts, including the cylinder switch.
- Load fluctuations during the reciprocating stroke of the cylinder can cause inconsistent piston speed, leading to greater variation in the stop position. Adjust the mounting of the load so as to prevent any load fluctuations during the reciprocating stroke of the cylinder, especially before the stop position.
- Since the speed changes significantly in the cushioned range and in the acceleration range after starting operation, the variability of the stopping position will increase. For this reason, the distance of the stop position increases when performing step operations with short stroke length, from the start point of the operation to the next position.
- Load to piston rod
  Operate the cylinder so that load applied to the piston rod is always applied in the axial direction more strictly than with a general-purpose air cylinder. Limit load movement using guides so play and torsion do not occur.
- Maintaining the rod sliding parts
  Protect the piston rod sliding surface from scratches and dents. Such scratches and dents can cause damage to packings, resulting in leakage and/or brake failure.

Use/maintenance

1. Common

⚠ WARNING

- The brake section can be removed from the cylinder body. Do not disassemble or inspect brakes, or a hazardous situation may occur when brakes are used again.
- The required grease is applied to brakes. Avoid applying extra grease and do not wipe grease off.
- The required grease is applied when brakes are replaced, so there is no need to apply grease to rods.
- Always use the product with the dust cover on, except for when performing manual release, in order to prevent failure or malfunction.

⚠ CAUTION

- Air supply pipes that are too narrow or too long can reduce stopping accuracy.
- Frictional resistance increases and causes the piston speed to change when the cylinder has been stopped for a long time, such as when using first thing in the morning or afternoon. This may impair stopping accuracy. Conduct conditioning operations to obtain a stable stopping accuracy.
- If the manual release bolt is removed while the piston rod is pulled out, the bolt cannot be screwed in. When the manual release bolt has been removed, supply air from the brake release port and screw in the bolt.
- Certification of class 2 pressure vessel
  According to regulations of the Ministry of Health, Labour and Welfare, the following cylinders should be certified by the Japan Boilers Association.
  (1) Cylinders with a rated pressure exceeding 0.2 MPa and cylinder capacity exceeding 0.04 m^3.
  (2) Cylinders with a rated pressure exceeding 0.2 MPa, tube bore size exceeding 200 mm and length exceeding 1000 mm.

$$V=\frac{D^2\times S\times 3.14}{4\times 10^9}$$

V: Cylinder capacity (m^3)
D: Bore size (mm)
S: Body length (cylinder tube length) (mm)

- With cushion section check valve (C2)
  The larger the load, the greater the delay in the starting time of the cylinder will be. To shorten the starting time, use the cushion section check valve (C2).

USSD

Position locking compact cylinder

With brake/position locking

ø20/ø25/ø32/ø40
ø50/ø63/ø80/ø100

Overview

Compact cylinder that integrates the cylinder switch into the body, with an anti-dropping mechanism that functions at any piston rod position, and an ultrashort compact square cylinder.

CONTENTS

Product introduction and application examples 842
Series variation 844
● Double acting/single rod (USSD) 846
● Double acting/single rod/high load (USSD-K) 846
USSD common accessory dimensions 880
⚠ Safety precautions 882

The cylinder switches T2YH, T2YV, T3YH, and T3YV are scheduled for end of production at the end of December 2023.

Compact and short stroke length with position

High abrasion-resistant round slit method

New long life position locking mechanism is used. Applying torque M to the lock metal generates axial force F. This force holds the rod.

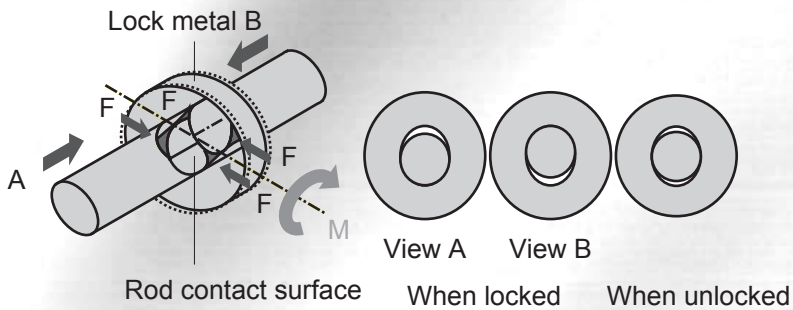

Lockable at any point throughout full stroke length

The stop position can be locked at any point throughout the full stroke length, including the stroke end, as long as the piston rod remains still.

No more workpiece damage

Prevents the cylinder from falling due to its own weight during power blackouts, etc. This resolves the workpiece damage issue.

2 types of lock direction

Either forward lock or backward lock can be selected.

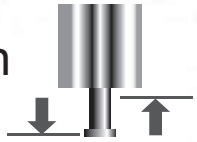

Lock reverse direction is free

Piston rod moves freely in reverse lock direction, and is therefore easy to remove even with workpiece clamped.

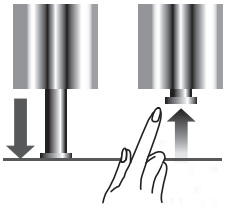

Easy lock release

It can be unlocked easily with a flathead screwdriver.

Lock in operation

Unlocked

Operational explanation

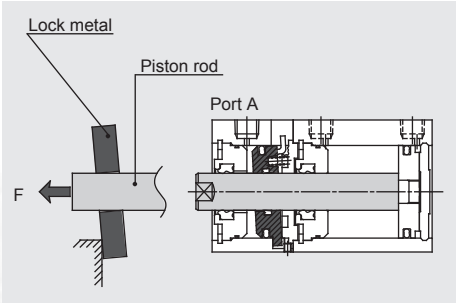

■ Lock operation

If air is discharged from port A, the lock metal tilts in response to spring force, and the piston rod is held.

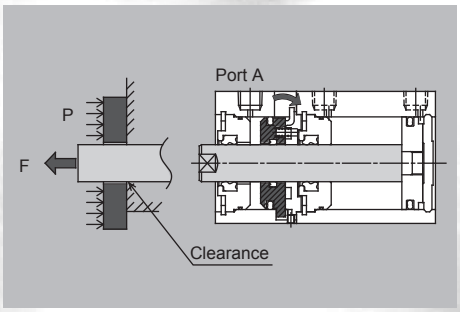

■ Unlocked

Air supply from port A brings the lock plate to vertical. This creates a clearance between the lock metal and the piston rod, allowing the rod to move freely.

SUPER COMPACT CYLINDER

USSD SERIES

CKD

locking.

Space saving short stroke compact cylinder now with position locking mechanism.
Workpiece safety is maintained even during power failures or accidents.

Applications

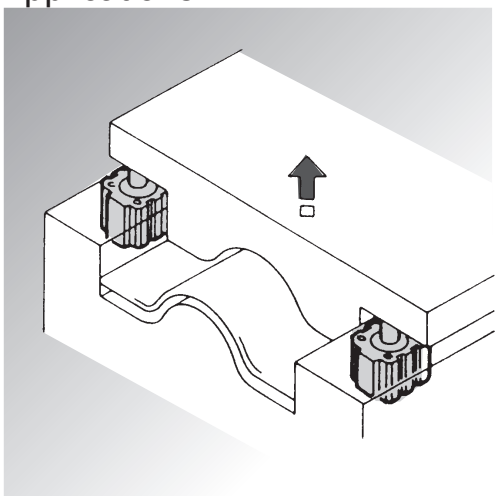

● Safety mechanism in mold casting

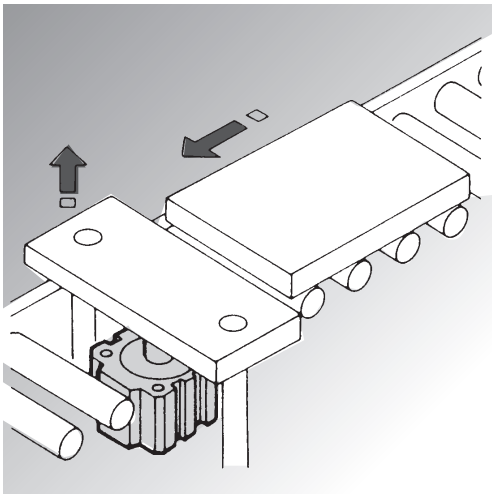

● Position locking of stopper

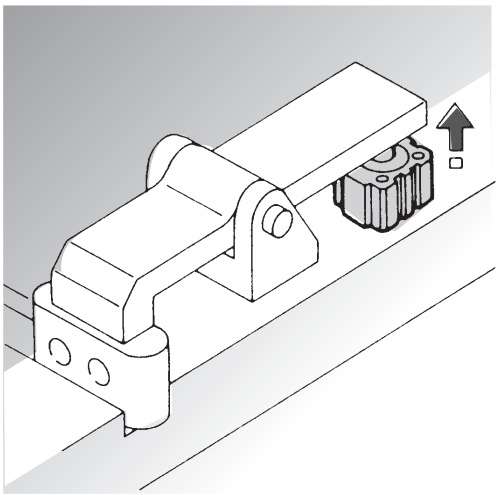

● Position locking of clamp jig

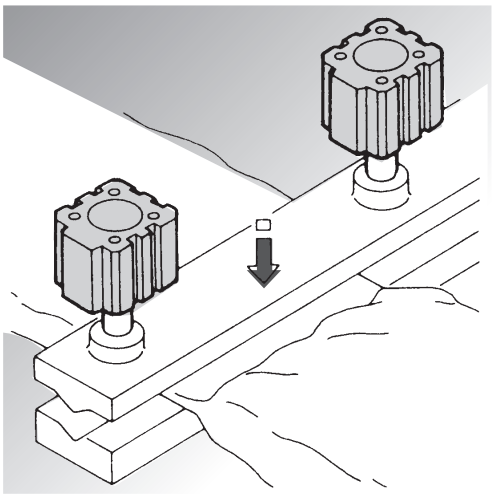

● Position locking of press jig

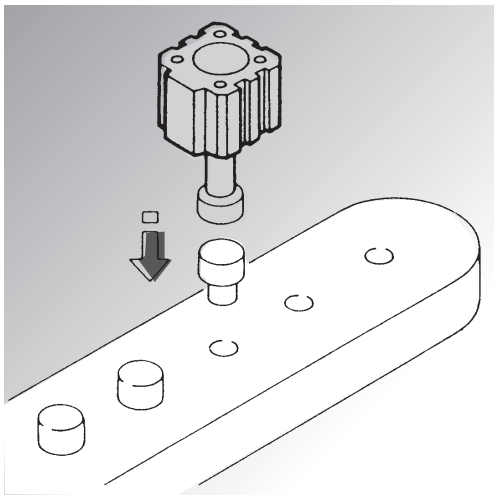

● Position locking of press-fit jig

Position locking compact cylinder USSD Series

Variation	Model No. JIS symbol	Bore size (mm)	Standard stroke (mm)						
			5	10	15	20	25	30	
Double acting with switch	USSD USSD-L 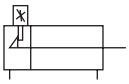	ø20	●	●	●	●	●	●	
		ø25/ø32/ø40/ø50	●	●	●	●	●	●	
		ø63/ø80/ø100	●	●		●		●	
Double acting/high load with switch	USSD-K USSD-KL 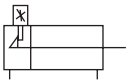	ø20	●	●	●	●	●	●	
		ø25/ø32/ø40/ø50		●	●	●	●	●	
		ø63/ø80/ø100		●		●		●	

●: Standard ◎: Option ■: Not available

Stroke (mm)								Min. stroke (mm)	Max. stroke (mm)	Custom stroke (per mm)	Option	Mounting bracket		Switch	Page
											Rod end male thread	Foot	Clevis bracket		
	40	50	60	70	80	90	100				N	LB	CB		
									30		◎	◎	◎		
	●	●						1	50	1	◎	◎	◎	◎	846
	●	●							50		◎	◎	◎		
	●	●							200		◎	◎	◎		
	●	●	●	●	●	●	●	1	300	1	◎	◎	◎	◎	846
	●	●	●	●	●	●	●		300		◎	◎	◎		

Position locking compact cylinder

USSD/USSD-K Series

● Bore size: ø20/ø25/ø32/ø40/ø50/ø63/ø80/ø100

JIS symbol

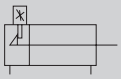

RoHS CAD

Common specifications

Item		USSD/USSD-K							
Bore size	mm	ø20	ø25	ø32	ø40	ø50	ø63	ø80	ø100
Actuation		Double acting							
Working fluid		Compressed air							
Max. working pressure	MPa	1.0 (≈150 psi, 10 bar)							
Min. working pressure	MPa	0.25 (≈36 psi, 2.5 bar) (no load) Note							
Proof pressure	MPa	1.6 (≈230 psi, 16 bar)							
Ambient temperature	°C	-10 (14°F) to 60 (140°F) (no freezing)							
Port size		M5		Rc1/8		Rc1/4		Rc3/8	
Stroke tolerance	mm	USSD: $^{+1.0}_{0}$				USSD-K: $^{+2.0}_{0}$			
Working piston speed	mm/s	50 to 500					50 to 300		
Cushion		USSD: None				USSD-K: Rubber cushion			
Lubrication		Not required (use turbine oil class 1 ISO VG32 if necessary for lubrication)							
Lock force	N	150	235	386	603	943	1497	2464	3847
Option		Rod end male thread (N)							
Allowable absorbed energy	J Without cushion	0.016	0.021	0.025	0.092	0.1	0.12	0.27	0.56
	J With cushion	0.157	0.157	0.402	0.628	0.98	1.56	2.51	7.92

Note: Depending on the installation condition, piston rod may start moving at 0.05 MPa. Therefore, pay attention to residual and exhaust pressure.

Individual specifications

Model No.	USSD (double acting single rod)	USSD-K (double acting single rod/high load)
Stroke tolerance mm	+1.0 0	+2.0 0
Cushion	None	Rubber cushion

Stroke

Model	Bore size (mm)	Standard stroke (mm) (*4)	Max. stroke (mm)	Min. stroke (mm)	Min. stroke with switch (mm)
USSD	ø20	5, 10, 15, 20, 25, 30	30	1 (*3)	5 (*4)
	ø25, ø32, ø40, ø50	5, 10, 15, 20, 25, 30, 40, 50	50		
	ø63, ø80, ø100	5, 10, 20, 30, 40, 50			
USSD-K	ø20	5, 10, 15, 20, 25, 30, 40, 50	200 (*1)		5 (*4)
	ø25, ø32, ø40, ø50	10, 15, 20, 25, 30, 40, 50 60, 70, 80, 90, 100	300 (*1)		
	ø63, ø80, ø100	10, 20, 30, 40, 50, 60, 70 80, 90, 100			

*1 : Stroke over standard to maximum is available in increments of 10. (Example) USSD-K-20: 60, 70, 80, 90, 100 .....
Dimensions of custom stroke (example: 64 mm stroke) are the same as the next longer stroke (example: 70 mm stroke).
*2 : The custom stroke is available in 1 mm increments. However, the total length is the same as that of the next longer standard stroke.
*3 : The min. stroke is available from 1 mm. Take into account the stroke tolerance when placing an order.
4 : 10 mm or shorter type is not available for 2-color LED, off-delay, strong magnetic field proof, or with T1 or T8* switch.
*5 : From 101 to 200 for ø20, 151 to 300 for ø25 to ø50, or 201 to 300 for ø63 to ø100, internal structure and total length are different in some products.

Switch specifications

● 1-color/2-color LED

Item	Proximity 2-wire	Proximity 2-wire			Proximity 3-wire				Reed 2-wire						
	T1H/T1V	T2H/T2V/ T2JH/T2JV	T2YH/ T2YV	T2WH/ T2WV	T3H/ T3V	T3PH/ T3PV	T3YH/ T3YV	T3WH/ T3WV	T0H/T0V		T5H/T5V		T8H/T8V		
Applications	For programmable controller, relay, compact solenoid valve	Dedicated for programmable controller			For programmable controller, relay				For programmable controller, relay		For programmable controller, relay, IC circuit (no indicator lamp), serial connection		For programmable controller, relay		
Output method	-				NPN output	PNP output	NPN output	NPN output	-						
Pwr. supp. V.	-				10 to 28 VDC				-						
Load voltage	85 to 265 VAC	10 to 30 VDC		24 VDC ±10%	30 VDC or less				12/24 VDC	100/110 VAC	5/12/24 VDC	100/110 VAC	12/24 VDC	110 VAC	220 VAC
Load current	5 to 100 mA	5 to 20 mA (*3)			100 mA or less		50 mA or less		5 to 50 mA	7 to 20 mA	50 mA or less	20 mA or less	5 to 50 mA	7 to 20 mA	7 to 10 mA
Indicator lamp	LED (Lit when ON)	LED (Lit when ON)	Red/green LED (Lit when ON)	Red/green LED (Lit when ON)	LED (Lit when ON)	Yellow LED (Lit when ON)	Red/green LED (Lit when ON)	Red/green LED (Lit when ON)	LED (Lit when ON)		Without LED		LED (Lit when ON)		
Leakage current	≤ 1 mA at 100 VAC, ≤ 2 mA at 200 VAC	1 mA or less			10 μA or less				0 mA						
Weight g	1 m:33 3 m:87 5 m:142	1 m:18 3 m:49 5 m:80	1 m:33 3 m:87 5 m:142	1 m:18 3 m:49 5 m:80	1 m:18 3 m:49 5 m:80		1 m:33 3 m:87 5 m:142	1 m:18 3 m:49 5 m:80	1 m:18 3 m:49 5 m:80				1 m:33 3 m:87 5 m:142		

*1 : Refer to Ending Page 1 for detailed switch specifications and dimensions.
*2 : Switches other than the above models, such as switches with connectors, are also available. Refer to Ending Page 1.
*3 : The max. load current is 20 mA at 25°C. The current is lower than 20 mA if the operating ambient temperature around the switch is higher than 25°C. (5 to 10 mA at 60°C)

Theoretical thrust table

(Unit: N)

Bore size (mm)	Operating direction	Working pressure MPa								
		0.25	0.3	0.4	0.5	0.6	0.7	0.8	0.9	1.0
ø20	Push	78.5	94.2	$1.26x10^2$	$1.57x10^2$	$1.88x10^2$	$2.20x10^2$	$2.51x10^2$	$2.83x10^2$	$3.14x10^2$
	Pull	58.9	70.7	94.2	$1.18x10^2$	$1.41x10^2$	$1.65x10^2$	$1.88x10^2$	$2.12x10^2$	$2.36x10^2$
ø25	Push	$1.23x10^2$	$1.47x10^2$	$1.96x10^2$	$2.45x10^2$	$2.95x10^2$	$3.44x10^2$	$3.93x10^2$	$4.42x10^2$	$4.91x10^2$
	Pull	94.3	$1.13x10^2$	$1.51x10^2$	$1.89x10^2$	$2.27x10^2$	$2.64x10^2$	$3.02x10^2$	$3.40x10^2$	$3.78x10^2$
ø32	Push	$2.01x10^2$	$2.41x10^2$	$3.22x10^2$	$4.02x10^2$	$4.83x10^2$	$5.63x10^2$	$6.43x10^2$	$7.24x10^2$	$8.04x10^2$
	Pull	$1.51x10^2$	$1.81x10^2$	$2.41x10^2$	$3.02x10^2$	$3.62x10^2$	$4.22x10^2$	$4.83x10^2$	$5.43x10^2$	$6.03x10^2$
ø40	Push	$3.14x10^2$	$3.77x10^2$	$5.03x10^2$	$6.28x10^2$	$7.54x10^2$	$8.80x10^2$	$1.01x10^3$	$1.13x10^3$	$1.26x10^3$
	Pull	$2.64x10^2$	$3.17x10^2$	$4.22x10^2$	$5.28x10^2$	$6.33x10^2$	$7.39x10^2$	$8.44x10^2$	$9.50x10^2$	$1.06x10^3$
ø50	Push	$4.91x10^2$	$5.89x10^2$	$7.85x10^2$	$9.82x10^2$	$1.18x10^3$	$1.37x10^3$	$1.57x10^3$	$1.77x10^3$	$1.96x10^3$
	Pull	$4.13x10^2$	$4.95x10^2$	$6.60x10^2$	$8.25x10^2$	$9.90x10^2$	$1.15x10^3$	$1.32x10^3$	$1.48x10^3$	$1.65x10^3$
ø63	Push	$7.79x10^2$	$9.35x10^2$	$1.25x10^3$	$1.56x10^3$	$1.87x10^3$	$2.18x10^3$	$2.49x10^3$	$2.81x10^3$	$3.12x10^3$
	Pull	$7.01x10^2$	$8.41x10^2$	$1.12x10^3$	$1.40x10^3$	$1.68x10^3$	$1.96x10^3$	$2.24x10^3$	$2.52x10^3$	$2.80x10^3$
ø80	Push	$1.26x10^3$	$1.51x10^3$	$2.01x10^3$	$2.51x10^3$	$3.02x10^3$	$3.52x10^3$	$4.02x10^3$	$4.52x10^3$	$5.03x10^3$
	Pull	$1.13x10^3$	$1.36x10^3$	$1.81x10^3$	$2.27x10^3$	$2.72x10^3$	$3.17x10^3$	$3.63x10^3$	$4.08x10^3$	$4.54x10^3$
ø100	Push	$1.97x10^3$	$2.36x10^3$	$3.14x10^3$	$3.93x10^3$	$4.71x10^3$	$5.50x10^3$	$6.28x10^3$	$7.07x10^3$	$7.85x10^3$
	Pull	$1.79x10^3$	$2.14x10^3$	$2.86x10^3$	$3.57x10^3$	$4.29x10^3$	$5.00x10^3$	$5.72x10^3$	$6.43x10^3$	$7.15x10^3$

LCM
LCR
LCG
LCW
LCX
STM
STG
STS/STL
STR2
UCA2
ULK*
JSK/M2
JSG
JSC3/JSC4
USSD
UFCD
USC
UB
JSB3
LMB
LML
HCM
HCA
LBC
CAC4
UCAC2
CAC-N
UCAC-N
RCS2
RCC2
PCC
SHC
MCP
GLC
MFC
BBS
RRC
GRC
RV3*
NHS
HRL
LN
Hand
Chuk
MecHnd/Chuk
ShkAbs
FJ
FK
SpdContr
Ending

How to order

● Without switch (without magnet for switch)

USSD-K — 20 - 5 - F ———— N - LB

● With switch (built-in magnet for switch)

USSD-KL - 20 - 5 - F - T0H - R - N - LB

Ⓐ Model No.
Ⓑ Bore size (mm)
Ⓒ Stroke (mm)
Ⓓ Lock direction
Ⓔ Switch model No. *3 *4
Ⓕ Switch quantity
Ⓖ Option
Ⓗ Mounting bracket *2 *4

Code	Description
Ⓐ Model No.	
USSD	Double acting
USSD-L	Double acting/with switch
USSD-K	Double acting/high load
USSD-KL	Double acting/high load/with switch
Ⓑ Bore size (mm)	
20	ø20
25	ø25
32	ø32
40	ø40
50	ø50
63	ø63
80	ø80
100	ø100
Ⓒ Stroke (mm)	
Refer to the stroke table on the following page.	
Ⓓ Lock direction	
F	Forward locking
B	Backward locking

Ⓔ Switch model No.

Axial lead wire	Radial lead wire	Contact	Voltage AC	Voltage DC	Indicator	Lead wire
T0H*	**T0V***	Reed	●	●	1-color LED	2-wire
T5H*	**T5V***	Reed	●	●	Without LED	2-wire
T8H*	**T8V***	Reed	●	●	1-color LED	2-wire
T1H*	**T1V***	Proximity	●		1-color LED	2-wire
T2H*	**T2V***	Proximity		●	1-color LED	2-wire
T3H*	**T3V***	Proximity		●	1-color LED	3-wire
T3PH*	**T3PV***	Proximity		●	1-color LED	3-wire
T2WH*	**T2WV***	Proximity		●	2-color LED	2-wire
T2YH*	**T2YV***	Proximity		●	2-color LED	2-wire
T3WH*	**T3WV***	Proximity		●	2-color LED	3-wire
T3YH*	**T3YV***	Proximity		●	2-color LED	3-wire
T2JH*	**T2JV***	Proximity		●	Off-delay	2-wire

*** Lead wire length (m)**	
Blank	1 m (standard)
3	3 m (option)
5	5 m (option)
Ⓕ Switch quantity	
R	1 on rod side
H	1 on head side
D	2
Ⓖ Option	
Blank	Rod end female thread
N	Rod end male thread
Ⓗ Mounting bracket	
LB	Axial foot
CB	Clevis bracket (pin and snap ring attached)

⚠ Precautions for model No. selection

*1 : Switches other than ➊ Switch model No. are also available. (Made to order)
Refer to Ending Page 1 for details.
*2 : The mounting bracket is attached at shipment.
3 : T8 switch cannot be mounted for USSD-*L with bore size ø20 to ø32.
*4 : Switches and mounting brackets are shipped with the product.
Contact CKD if assembling before shipment is necessary.

[Example of model No.]

USSD-KL-20-5-F-T0H-R-N

Model: Position locking compact cylinder

- ➊ Model No. : Double acting/high load/with switch
- ➋ Bore size : ø20 mm
- ➌ Stroke : 5 mm
- ➍ Lock direction : Forward locking
- ➎ Switch model No. : Reed axial lead wire 1 m
- ➏ Switch quantity : 1 on rod side
- ➐ Option : Rod end male thread

LCM
LCR
LCG
LCW
LCX
STM
STG
STS/STL
STR2
UCA2
ULK*
JSK/M2
JSG
JSC3/JSC4
USSD
UFCD
USC
UB
JSB3
LMB
LML
HCM
HCA
LBC
CAC4
UCAC2
CAC-N
UCAC-N
RCS2
RCC2
PCC
SHC
MCP
GLC
MFC
BBS
RRC
GRC
RV3*
NHS
HRL
LN
Hand
Chuk
MecHnd/Chuk
ShkAbs
FJ
FK
SpdContr
Ending

Stroke

Series	Stroke (mm)		Bore size (mm)							
			ø20	ø25	ø32	ø40	ø50	ø63	ø80	ø100
USSD	Standard stroke	5	●	●	●	●	●	●	●	●
		10	●	●	●	●	●	●	●	●
		15	●	●	●	●	●			
		20	●	●	●	●	●	●	●	●
		25	●	●	●	●	●			
		30	●	●	●	●	●	●	●	●
		40		●	●	●	●	●	●	●
		50		●	●	●	●	●	●	●
	Min. stroke	*1	1							
	Custom stroke	*1, *2	1							
USSD-K	Standard stroke	5	●							
		10	●	●	●	●	●	●	●	●
		15	●	●	●	●	●			
		20	●	●	●	●	●	●	●	●
		25	●	●	●	●	●			
		30	●	●	●	●	●	●	●	●
		40	●	●	●	●	●	●	●	●
		50	●	●	●	●	●	●	●	●
		60		●	●	●	●	●	●	●
		70		●	●	●	●	●	●	●
		80		●	●	●	●	●	●	●
		90		●	●	●	●	●	●	●
		100		●	●	●	●	●	●	●
	Min. stroke	*1	1							
	Custom stroke	*1, *2	1							

*1: The total length is the same as that of the next longer standard stroke.
(Less than 5 mm with switch not available)
2-color LED, off-delay, or 10 mm or shorter type with T1* or T8* switch is not available.

How to order switch

SW - T0H

Switch model No.
(Item Ⓔ on page 848)

Dimensions for ordering mounting bracket

Bore size (mm) / Mounting bracket	ø20	ø25	ø32	ø40	ø50	ø63	ø80	ø100
Foot (LB)	USSD-LB-20	USSD-LB-25	USSD-LB-32	USSD-LB-40	USSD-LB-50	USSD-LB-63	USSD-LB-80	USSD-LB-100
Clevis bracket (CB)	SSD-CB-20	SSD-CB-25	SSD-CB-32	SSD-CB-40	SSD-CB-50	SSD-CB-63	SSD-CB-80	SSD-CB-100

*1: The foot mounting bracket is provided as 2 pcs./set.

Specifications for rechargeable battery

(Catalog No. CC-1226A)

● Design compatible with rechargeable battery manufacturing process.

USSD -…- P4*
USSD-K

* Contact CKD for details.

LCM
LCR
LCG
LCW
LCX
STM
STG
STS/STL
STR2
UCA2
ULK*
JSK/M2
JSG
JSC3/JSC4
USSD
UFCD
USC
UB
JSB3
LMB
LML
HCM
HCA
LBC
CAC4
UCAC2
CAC-N
UCAC-N
RCS2
RCC2
PCC
SHC
MCP
GLC
MFC
BBS
RRC
GRC
RV3*
NHS
HRL
LN
Hand
Chuk
MecHnd/Chuk
ShkAbs
FJ
FK
SpdContr
Ending

High load allowable energy graph/weight table

High load allowable energy graph

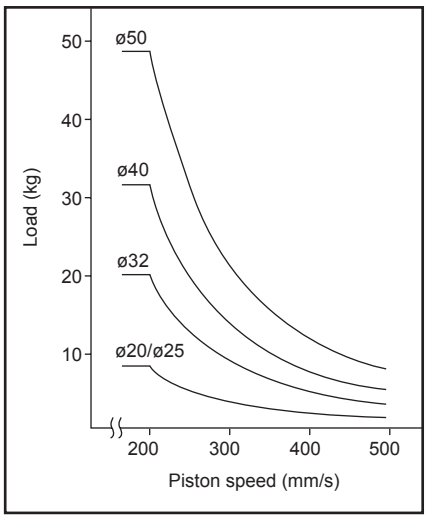

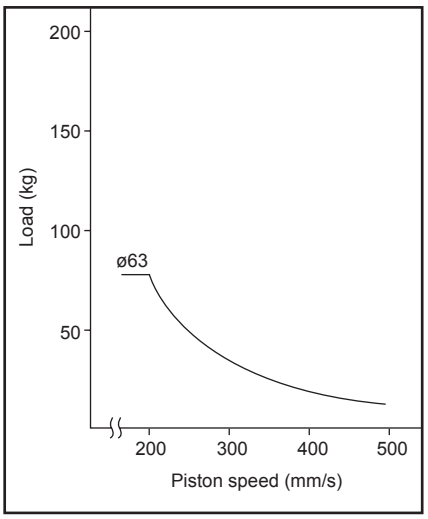

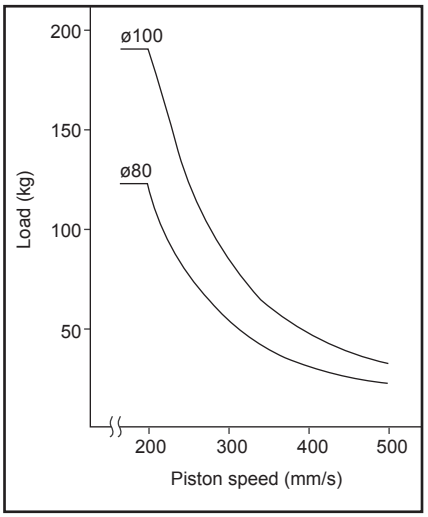

● Note: Usable in the range below and to the left of the curve. For the upper right range, an external cushion is required.

USSD Cylinder weight table (weight with switch includes weight for two cylinder switches)

Unit: g

Stroke (mm)	5		10		15		20		25		30		40		50	
Bore size (mm)	No switch	Switch	No switch	Switch	No switch	Switch	No switch	Switch	No switch	Switch	No switch	Switch	No switch	Switch	No switch	Switch
ø20	173	228	185	260	198	273	211	286	223	298	236	311	-	-	-	-
ø25	247	338	262	353	278	369	294	385	310	401	325	416	357	448	388	479
ø32	342	456	364	478	386	500	408	522	429	543	451	565	495	609	538	652
ø40	493	636	520	663	546	689	573	716	600	743	626	769	679	822	732	875
ø50	859	1053	901	1095	943	1137	985	1179	1027	1221	1070	1264	1154	1348	1238	1432
ø63	1342	1621	1397	1676	-	-	1507	1786	-	-	1617	1896	1728	2007	1838	2117
ø80	2591	3004	2678	3091	-	-	2851	3264	-	-	3024	3437	3198	3611	3371	3784
ø100	4219	4786	4333	4900	-	-	4560	5127	-	-	4788	5355	5015	5582	5243	5810

USSD-K Cylinder weight table (weight with switch includes weight for two cylinder switches)

Unit: g

Stroke (mm)	5		10		15		20		25		30		40		50		60		70		80	
Bore size (mm)	No switch	Switch	No switch	Switch	No switch	Switch	No switch	Switch	No switch	Switch	No switch	Switch	No switch	Switch	No switch	Switch	No switch	Switch	No switch	Switch	No switch	Switch
ø20	185	260	198	273	211	286	223	298	236	311	248	323	273	348	298	373	323	398	348	423	373	448
ø25	-	-	278	369	294	385	310	401	325	416	342	433	374	465	406	497	438	529	470	561	502	593
ø32	-	-	408	522	429	543	451	565	473	587	495	609	538	652	581	695	624	738	667	781	710	824
ø40	-	-	573	716	600	743	626	769	652	795	679	822	732	875	785	928	838	981	891	1034	944	1087
ø50	-	-	985	1179	1027	1221	1070	1264	1113	1307	1154	1348	1238	1432	1322	1516	1406	1600	1490	1684	1574	1768
ø63	-	-	1507	1786	-	-	1617	1896	-	-	1728	2007	1838	2117	1948	2227	2058	2337	2168	2447	2278	2557
ø80	-	-	2851	3264	-	-	3024	3437	-	-	3198	3611	3371	3784	3544	3957	3717	4130	3890	4303	4063	4476
ø100	-	-	4560	5127	-	-	4788	5355	-	-	5015	5582	5243	5810	5471	6038	5699	6266	5927	6494	6155	6722

Stroke (mm)	90		100		110		120		130		140		150		160		170		180		190	
Bore size (mm)	No switch	Switch	No switch	Switch	No switch	Switch	No switch	Switch	No switch	Switch	No switch	Switch	No switch	Switch	No switch	Switch	No switch	Switch	No switch	Switch	No switch	Switch
ø20	398	473	423	498	448	523	473	548	498	573	523	598	548	623	573	648	598	673	623	698	648	723
ø25	534	625	566	657	598	689	630	721	662	753	694	785	726	817	758	849	790	881	822	913	854	945
ø32	753	867	796	910	839	953	882	996	925	1039	968	1082	1011	1125	1053	1167	1096	1210	1139	1253	1182	1296
ø40	997	1140	1050	1193	1103	1246	1156	1299	1209	1352	1262	1405	1315	1458	1368	1511	1421	1564	1474	1617	1527	1670
ø50	1658	1852	1742	1936	1826	2020	1910	2104	1994	2188	2078	2272	2162	2356	2260	2454	2345	2539	2430	2624	2515	2709
ø63	2388	2667	2498	2777	2608	2887	2718	2997	2828	3107	2938	3217	3048	3327	3158	3437	3268	3547	3378	3657	3488	3767
ø80	4236	4649	4409	4822	4582	4995	4755	5168	4928	5341	5101	5514	5274	5687	5447	5860	5620	6033	5793	6206	5966	6379
ø100	6383	6950	6611	7178	6839	7406	7067	7634	7295	5252	7523	8090	7751	8318	7979	8546	8207	8774	8435	9002	8663	9230

Stroke (mm)	200		210		220		230		240		250		260		270		280		290		300	
Bore size (mm)	No switch	Switch	No switch	Switch	No switch	Switch	No switch	Switch	No switch	Switch	No switch	Switch	No switch	Switch	No switch	Switch	No switch	Switch	No switch	Switch	No switch	Switch
ø20	673	748	-	-	-	-	-	-	-	-	-	-	-	-	-	-	-	-	-	-	-	-
ø25	886	977	929	1009	961	1041	993	1073	1025	1105	1057	1137	1089	1169	1121	1201	1153	1233	1185	1265	1217	1297
ø32	1225	1339	1268	1382	1311	1425	1354	1468	1397	1511	1440	1554	1483	1597	1526	1640	1569	1683	1612	1726	1655	1769
ø40	1580	1723	1633	1776	1686	1829	1739	1882	1792	1935	1845	1988	1898	2041	1951	2094	2004	2147	2057	2200	2110	2253
ø50	2600	2794	2685	2879	2770	2964	2855	3049	2940	3134	3025	3219	3110	3304	3195	3389	3280	3474	3365	3559	3450	3644
ø63	3598	3877	3707	3986	3817	4096	3927	4206	4037	4316	4147	4426	4257	4536	4367	4646	4477	4756	4587	4866	4697	4976
ø80	4139	6552	6311	6724	6484	6897	6657	7070	6830	7243	7003	7416	7176	7589	7349	7762	7522	6360	7695	8108	7868	8281
ø100	8891	9458	9120	9687	9348	9915	9576	10143	9804	10371	10032	10599	10260	10827	10488	11055	10716	11283	10944	11511	11172	11739

LCM
LCR
LCG
LCW
LCX
STM
STG
STS/STL
STR2
UCA2
ULK*
JSK/M2
JSG
JSC3/JSC4
USSD
UFCD
USC
UB
JSB3
LMB
LML
HCM
HCA
LBC
CAC4
UCAC2
CAC-N
UCAC-N
RCS2
RCC2
PCC
SHC
MCP
GLC
MFC
BBS
RRC
GRC
RV3*
NHS
HRL
LN
Hand
Chuk
MecHnd/Chuk
ShkAbs
FJ
FK
SpdContr
Ending

Internal structure and parts list (ø20, ø25)

● USSD-L-20, 25-F
(Double acting, with switch, forward locking: F)

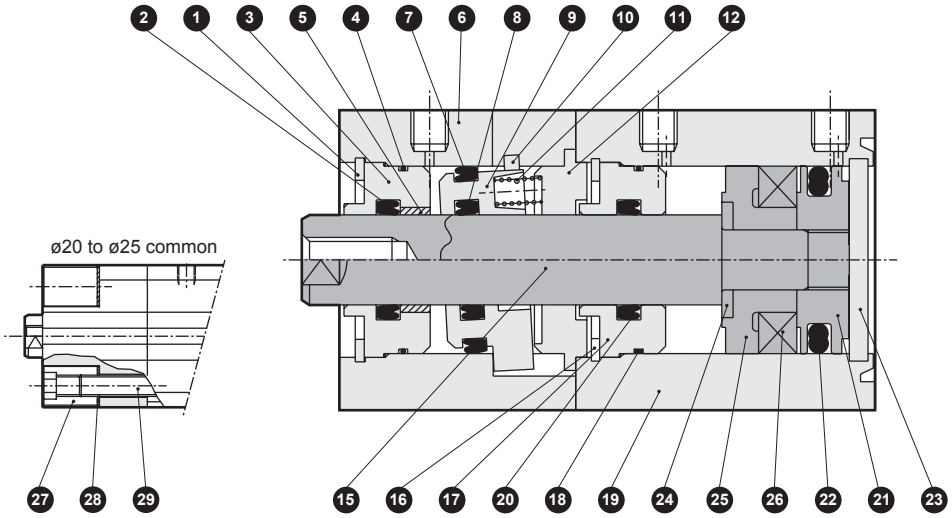

● USSD-20, 25-F
(Double acting, forward locking: F)

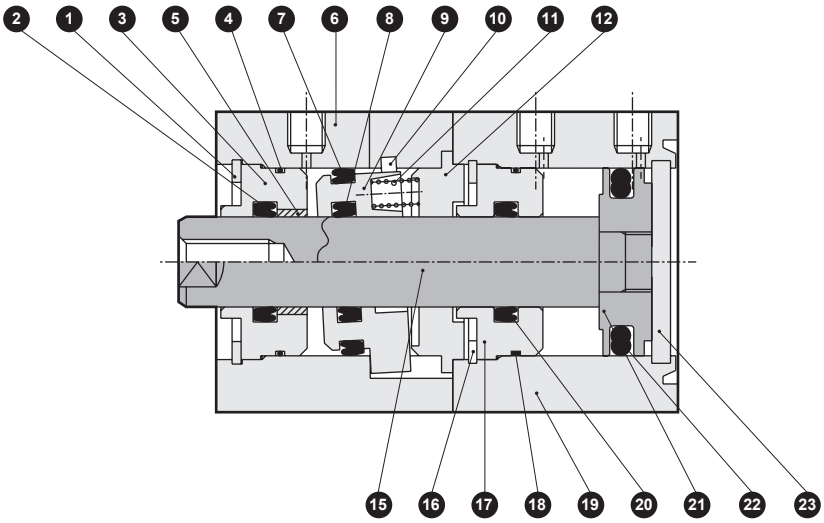

Cannot be disassembled

Parts list

No.	Part name	Material	Remarks	No.	Part name	Material	Remarks
1	C type snap ring (2)	Steel	Zinc phosphate film	9	Lock metal	Special steel	Zinc chromate
2	Rod packing (2)	Nitrile rubber		10	Release lever	Steel	Black finish
3	Rod metal (2)	Special aluminum	Alumite	11	Spring	Steel	Black finish
4	Rod metal gasket (2)	Nitrile rubber		12	Joint	Aluminum alloy	
5	Bush (2)	Dry bearing		13	Rod metal gasket (3)	Nitrile rubber	(B type only)
6	Lock body	Aluminum alloy	Hard alumite	14	Rod packing (4)	Nitrile rubber	(B type only)
7	Piston packing (2)	Nitrile rubber		15	Piston rod	Stainless steel	Industrial chrome plating
8	Rod packing (3)	Nitrile rubber		16	C type snap ring (1)	Steel	Zinc phosphate film

Internal structure and parts list (ø20, ø25)

LCM
LCR
LCG
LCW
LCX
STM
STG
STS/STL
STR2
UCA2
ULK*
JSK/M2
JSG
JSC3/JSC4
USSD
UFCD
USC
UB
JSB3
LMB
LML
HCM
HCA
LBC
CAC4
UCAC2
CAC-N
UCAC-N
RCS2
RCC2
PCC
SHC
MCP
GLC
MFC
BBS
RRC
GRC
RV3*
NHS
HRL
LN
Hand
Chuk
MecHnd/Chuk
ShkAbs
FJ
FK
SpdContr
Ending

● USSD-L-20, 25-B
(Double acting, with switch, backward locking: B)

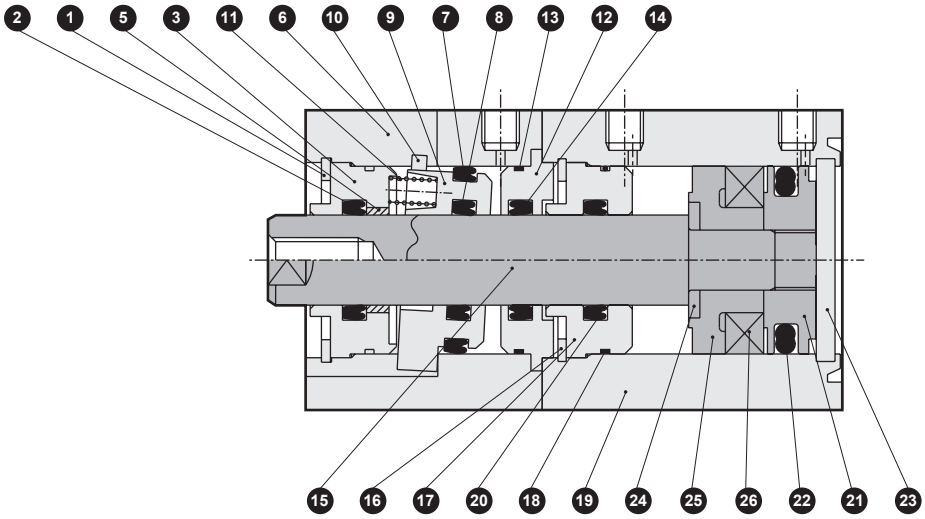

● USSD-20, 25-B
(Double acting, backward locking: B)

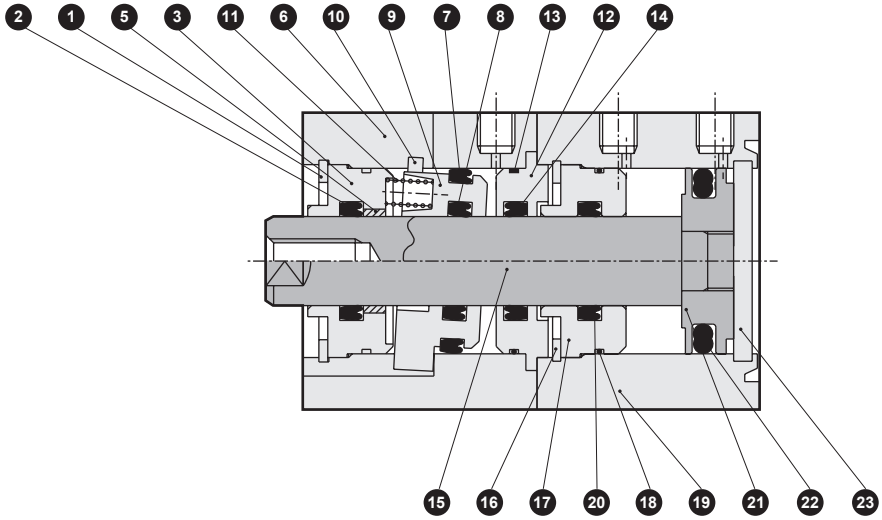

Cannot be disassembled

Parts list

No.	Part name	Material	Remarks	No.	Part name	Material	Remarks
17	Rod metal (1)	Special aluminum	Alumite	24	Spacer washer	Stainless steel	With switch only
18	Rod metal gasket (1)	Nitrile rubber		25	Spacer	Special resin	With switch only
19	Cylinder body	Aluminum alloy	Hard alumite	26	Piston magnet	Plastic magnet	With switch only
20	Rod packing (1)	Nitrile rubber		27	Round nut	Steel	Zinc chromate
21	Piston	Stainless steel		28	Conical spring washer	Steel	Black finish
22	Piston packing (1)	Nitrile rubber		29	Hexagon socket set screw	Steel	Black finish
23	Cover	Stainless steel					

LCM
LCR
LCG
LCW
LCX
STM
STG
STS/STL
STR2
UCA2
ULK*
JSK/M2
JSG
JSC3/JSC4
USSD
UFCD
USC
UB
JSB3
LMB
LML
HCM
HCA
LBC
CAC4
UCAC2
CAC-N
UCAC-N
RCS2
RCC2
PCC
SHC
MCP
GLC
MFC
BBS
RRC
GRC
RV3*
NHS
HRL
LN
Hand
Chuk
MecHnd/Chuk
ShkAbs
FJ
FK
SpdContr
Ending

Internal structure and parts list (ø32 to ø50)

● USSD-L-32 to 50-F
(Double acting, with switch, forward locking: F)

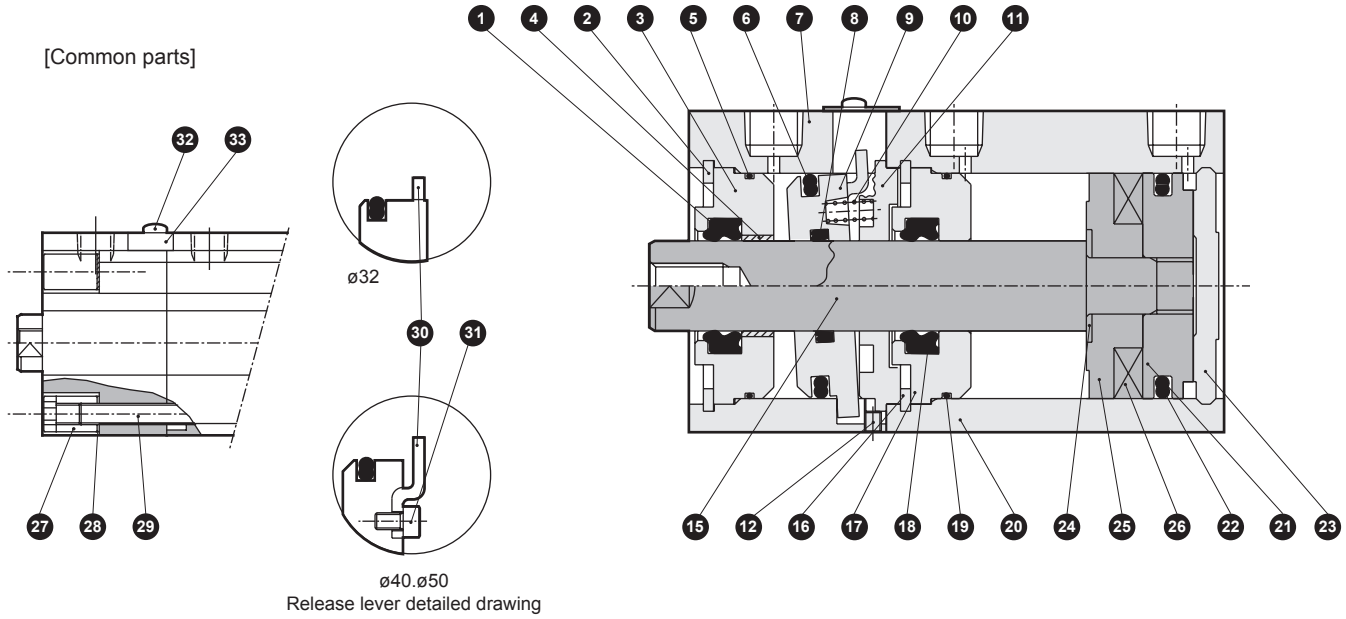

● USSD-32 to 50-F
(Double acting, forward locking: F)

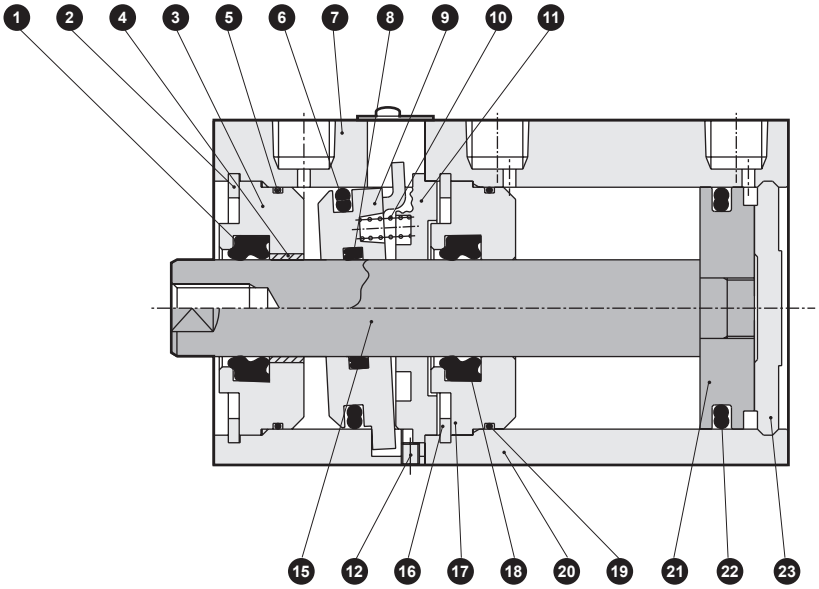

Cannot be disassembled

Parts list

No.	Part name	Material	Remarks	No.	Part name	Material	Remarks
1	Rod packing (2)	Nitrile rubber		9	Lock metal	Special steel	Zinc chromate
2	C type snap ring (2)	Steel	Zinc phosphate film	10	Spring	Steel	Black finish
3	Rod metal (2)	Aluminum alloy	Alumite (*1)	11	Joint	Aluminum alloy	
4	Bush (2)	Dry bearing		12	Hexagon socket set screw	Steel	Black finish (ø40 to ø50)
5	Rod metal gasket (2)	Nitrile rubber		13	Rod metal gasket (3)	Nitrile rubber	(B type only)
6	Piston packing (2)	Nitrile rubber		14	Rod packing (4)	Nitrile rubber	(B type only)
7	Lock body	Aluminum alloy	Hard alumite	15	Piston rod	Steel	Industrial chrome plating
8	Rod packing (3)	Nitrile rubber		16	C type snap ring (1)	Steel	Zinc phosphate film

*1: If the lock direction is F with ø32, chromate is used for the surface treatment.

Internal structure and parts list (ø32 to ø50)

● USSD-L-32 to 50-B
(Double acting, with switch, backward locking: B)

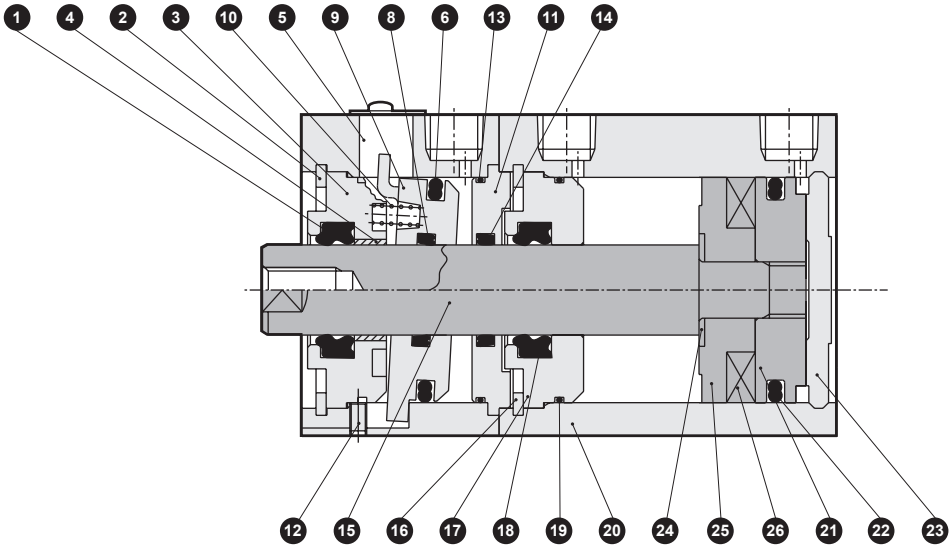

● USSD-32 to 50-B
(Double acting, backward locking: B)

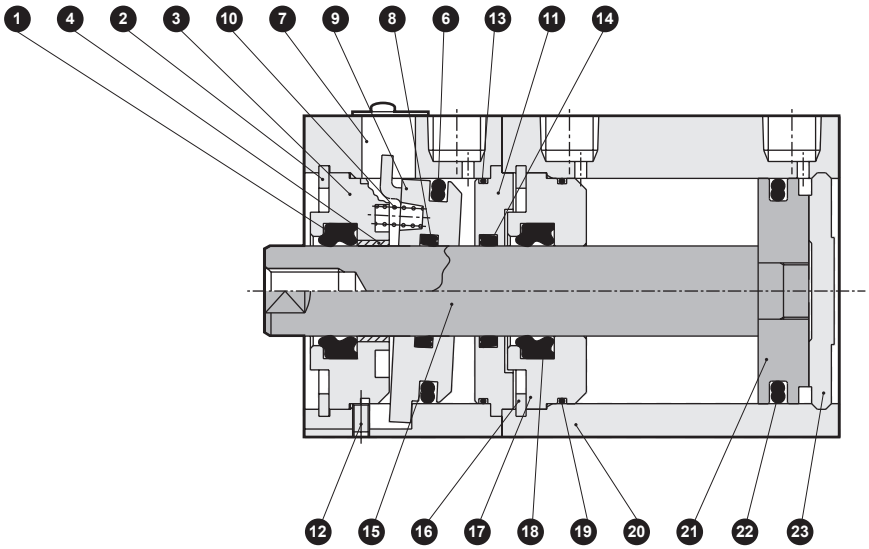

Cannot be disassembled

Parts list

No.	Part name	Material	Remarks	No.	Part name	Material	Remarks
17	Rod metal (1)	Aluminum alloy	Alumite	25	Spacer	Special resin	With switch only
18	Rod packing (1)	Nitrile rubber		26	Piston magnet	Plastic magnet	With switch only
				27	Round nut	Steel	Zinc chromate
19	Rod metal gasket (1)	Nitrile rubber		28	Conical spring washer	Steel	Black finish
20	Cylinder body	Aluminum alloy	Hard alumite	29	Hexagon socket set screw	Steel	Black finish
21	Piston	Aluminum alloy		30	Release lever	Steel	ø32 Black finish ø40 to ø50 Zinc chromate
22	Piston packing (1)	Nitrile rubber		31	Hexagon socket head cap screw	Steel	ø40 to ø50
23	Cover	Aluminum alloy		32	Cross-recessed round machine screw	Steel	
24	Spacer washer	Stainless steel	With switch only	33	Dust cover	Stainless steel	

LCM
LCR
LCG
LCW
LCX
STM
STG
STS/STL
STR2
UCA2
ULK*
JSK/M2
JSG
JSC3/JSC4
USSD
UFCD
USC
UB
JSB3
LMB
LML
HCM
HCA
LBC
CAC4
UCAC2
CAC-N
UCAC-N
RCS2
RCC2
PCC
SHC
MCP
GLC
MFC
BBS
RRC
GRC
RV3*
NHS
HRL
LN
Hand
Chuk
MecHnd/Chuk
ShkAbs
FJ
FK
SpdContr
Ending

Internal structure and parts list (ø63 to ø100)

● USSD-L-63 to 100-F
(Double acting, with switch, forward locking: F)

[Common parts]

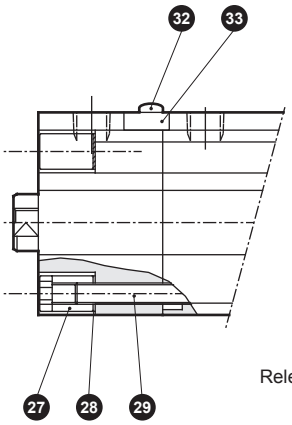

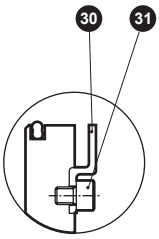

Release lever detailed drawing

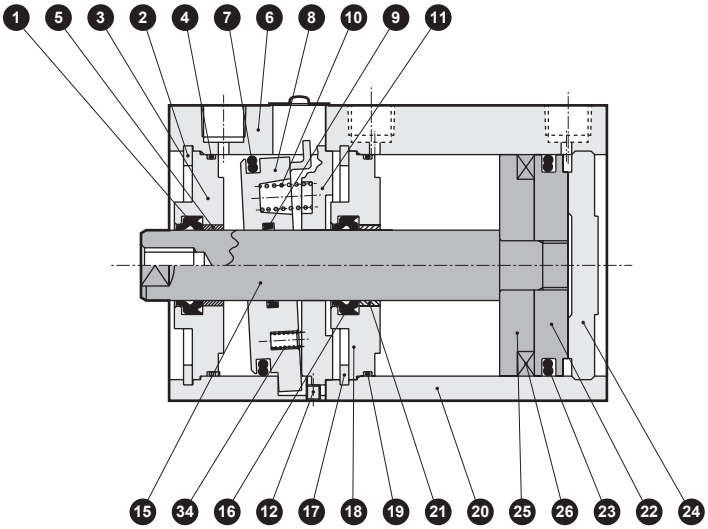

● USSD-63 to 100-F
(Double acting, forward locking: F)

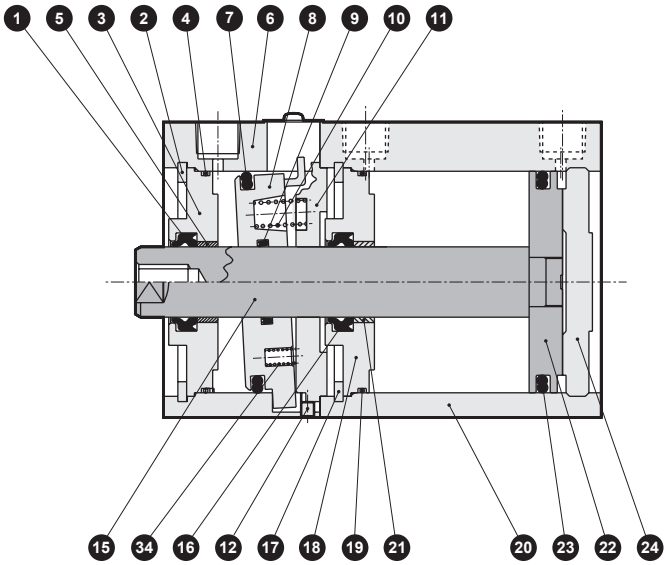

Cannot be disassembled

Parts list

No.	Part name	Material	Remarks	No.	Part name	Material	Remarks
1	Rod packing (2)	Nitrile rubber		9	Rod packing (3)	Nitrile rubber	
2	C type snap ring (2)	Steel	Zinc phosphate film	10	Spring (1)	Steel	Black finish
3	Rod metal (2)	Aluminum alloy	Alumite	11	Joint	Aluminum alloy	
4	Rod metal gasket (2)	Nitrile rubber		12	Hexagon socket set screw	Steel	Black finish
5	Bush (2)	Dry bearing		13	Rod metal gasket (3)	Nitrile rubber	(B type only)
6	Lock body	Aluminum alloy	Hard alumite	14	Rod packing (4)	Nitrile rubber	(B type only)
7	Piston packing (2)	Nitrile rubber		15	Piston rod	Steel	Industrial chrome plating
8	Lock metal	Special steel	Zinc chromate	16	Rod packing (1)	Nitrile rubber	

Internal structure and parts list (ø63 to ø100)

● USSD-L-ø63 to 100-B
(Double acting, with switch, backward locking: B)

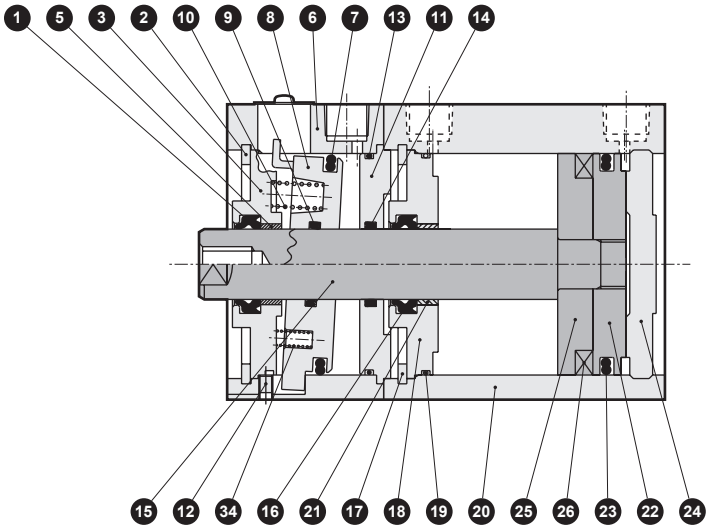

● USSD-ø63 to 100-B
(Double acting, backward locking: B)

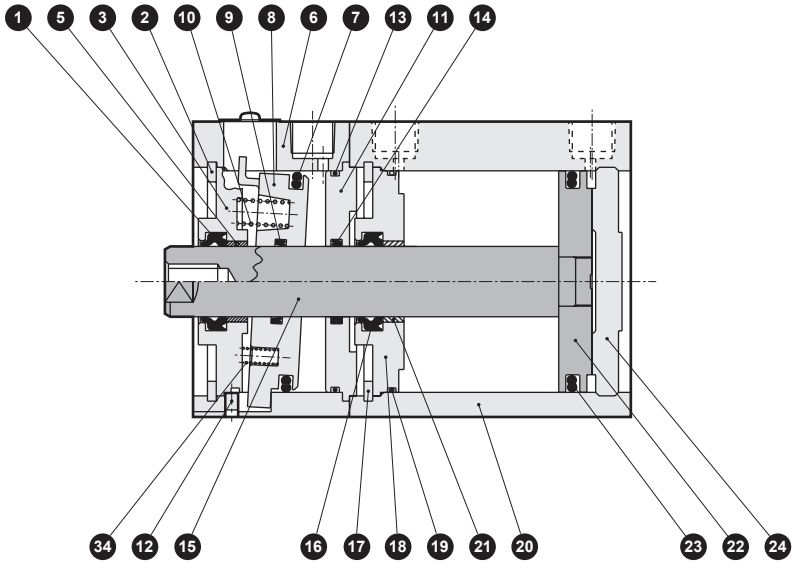

Cannot be disassembled

Parts list

No.	Part name	Material	Remarks	No.	Part name	Material	Remarks
17	C type snap ring (1)	Steel	Zinc phosphate film	26	Piston magnet	Plastic magnet	With switch only
18	Rod metal (1)	Aluminum alloy	Alumite	27	Round nut	Steel	Zinc chromate
19	Rod metal gasket (1)	Nitrile rubber		28	Conical spring washer	Steel	Black finish
20	Cylinder body	Aluminum alloy	Hard alumite	29	Hexagon socket set screw	Steel	Black finish
21	Bush (1)	Dry bearing		30	Release lever	Steel	Zinc chromate
22	Piston	Aluminum alloy	Chromate	31	Hexagon socket head cap screw	Steel	Black finish
23	Piston packing (1)	Nitrile rubber		32	Cross-recessed round machine screw	Steel	
24	Cover	Aluminum alloy	Chromate	33	Dust cover	Stainless steel	
25	Spacer	Aluminum alloy	Chromate (with switch only)	34	Spring (2)	Steel	Black finish (ø80/ø100 only)

LCM
LCR
LCG
LCW
LCX
STM
STG
STS/STL
STR2
UCA2
ULK*
JSK/M2
JSG
JSC3/JSC4
USSD
UFCD
USC
UB
JSB3
LMB
LML
HCM
HCA
LBC
CAC4
UCAC2
CAC-N
UCAC-N
RCS2
RCC2
PCC
SHC
MCP
GLC
MFC
BBS
RRC
GRC
RV3*
NHS
HRL
LN
Hand
Chuk
MecHnd/Chuk
ShkAbs
FJ
FK
SpdContr
Ending

Internal structure and parts list (high load ø20, ø25)

● USSD-KL-20, 25-F (Internal structure varies depending on stroke.)
(Double acting/high load, with switch, forward locking: F)

ø20: 100 stroke or less
ø25: 150 stroke or less

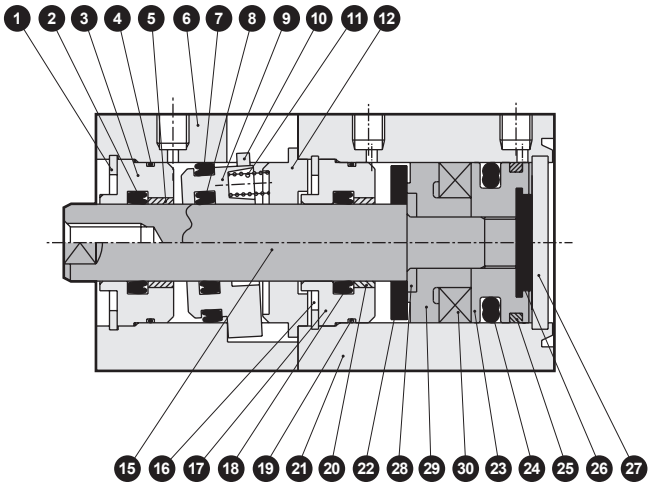

ø20: Over 100 to 200 stroke
ø25: Over 150 to 300 stroke

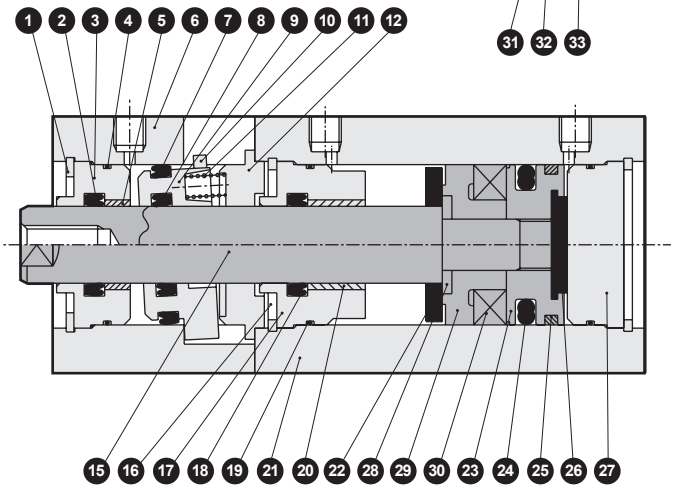

ø20 to ø25 common

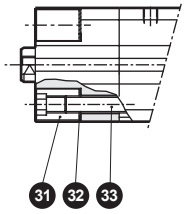

● USSD-K-20, 25-F (Internal structure varies depending on stroke.)
(Double acting, high load, forward locking: F)

ø20: 100 stroke or less
ø25: 150 stroke or less

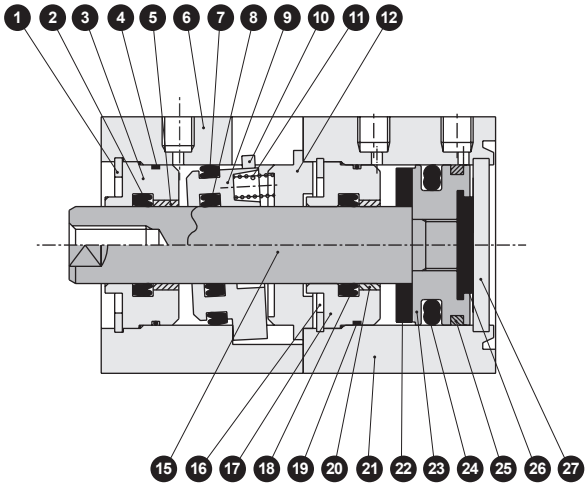

ø20: Over 100 to 200 stroke
ø25: Over 150 to 300 stroke

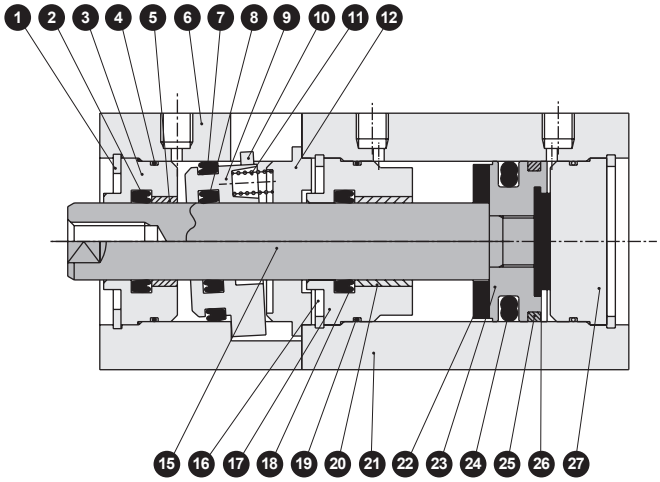

Cannot be disassembled

Parts list

No.	Part name	Material	Remarks	No.	Part name	Material	Remarks
1	C type snap ring (2)	Steel	Zinc phosphate film	10	Release lever	Steel	Black finish
2	Rod packing (2)	Nitrile rubber		11	Spring	Steel	Black finish
3	Rod metal (2)	Special aluminum	Alumite	12	Joint	Aluminum alloy	
4	Rod metal gasket (2)	Nitrile rubber		13	Rod metal gasket (3)	Nitrile rubber	(B type only)
5	Bush (2)	Dry bearing		14	Rod packing (4)	Nitrile rubber	(B type only)
6	Lock body	Aluminum alloy	Hard alumite	15	Piston rod	Stainless steel	Industrial chrome plating
7	Piston packing (2)	Nitrile rubber		16	C type snap ring (1)	Steel	Zinc phosphate film
8	Rod packing (3)	Nitrile rubber		17	Rod metal (1)	Special aluminum	Alumite
9	Lock metal	Special steel	Zinc chromate	18	Rod packing (1)	Nitrile rubber	

Internal structure and parts list (high load ø20, ø25)

● USSD-KL-20, 25-B (Internal structure varies depending on stroke.)
(Double acting/high load, with switch, backward locking: B)

ø20: 100 stroke or less
ø25: 150 stroke or less

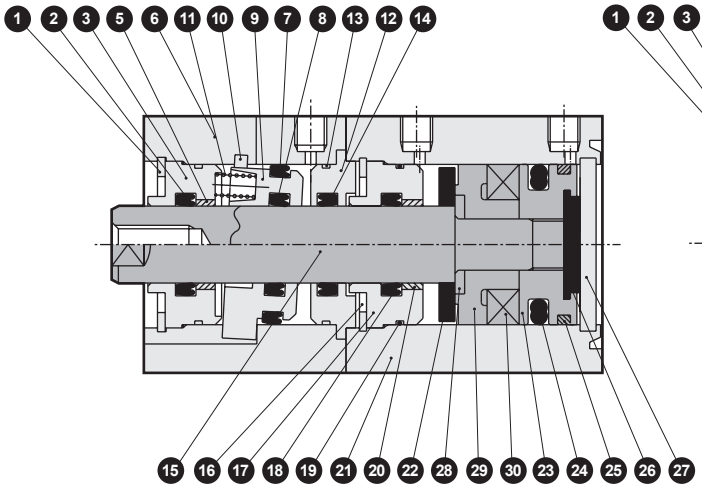

ø20: Over 100 to 200 stroke
ø25: Over 150 to 300 stroke

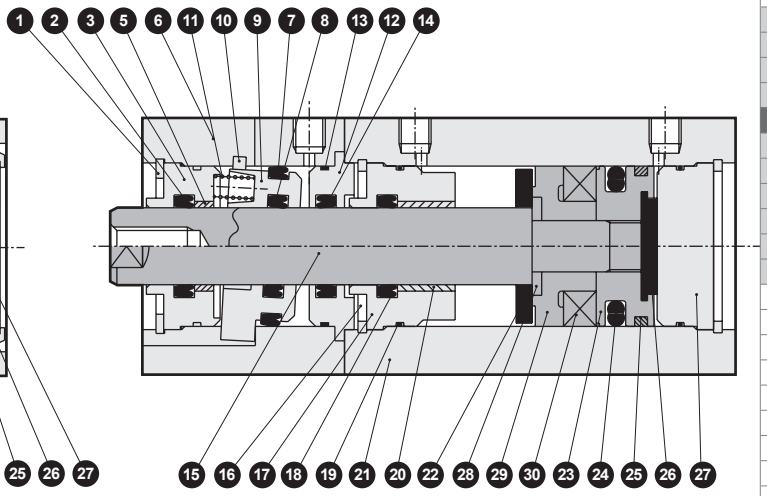

● USSD-K-20, 25-B (Internal structure varies depending on stroke.)
(Double acting, high load, backward locking: B)

ø20: 100 stroke or less
ø25: 150 stroke or less

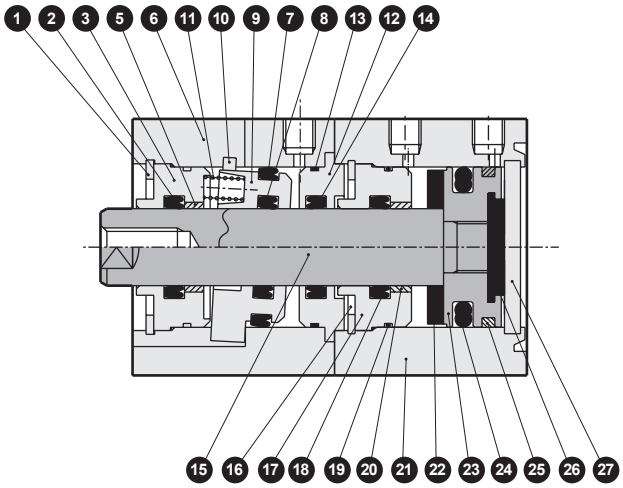

ø20: Over 100 to 200 stroke
ø25: Over 150 to 300 stroke

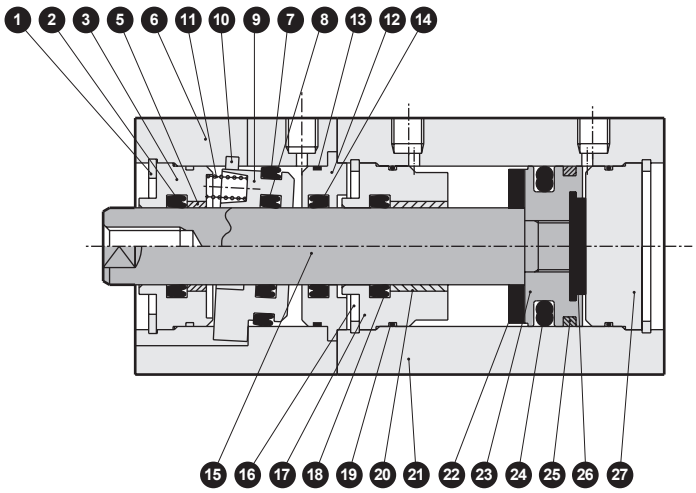

Cannot be disassembled

Parts list

No.	Part name	Material	Remarks	No.	Part name	Material	Remarks
19	Rod metal gasket (1)	Nitrile rubber		27	Cover	Stainless steel	(*1)
20	Bush (1)	Dry bearing		28	Spacer washer	Stainless steel	With switch only
21	Cylinder body	Aluminum alloy	Hard alumite	29	Spacer	Special resin	With switch only
22	Cushion rubber (R)	Urethane rubber		30	Piston magnet	Plastic magnet	
23	Piston	Stainless steel		31	Round nut	Steel	Zinc chromate
24	Piston packing (1)	Nitrile rubber		32	Conical spring washer	Steel	Black finish
25	Wear ring	Acetal resin		33	Hexagon socket set screw	Steel	Black finish
26	Cushion rubber (H)	Urethane rubber					

*1: For cover for long stroke, Material: Aluminum alloy Remarks: Alumite

LCM
LCR
LCG
LCW
LCX
STM
STG
STS/STL
STR2
UCA2
ULK*
JSK/M2
JSG
JSC3/JSC4
USSD
UFCD
USC
UB
JSB3
LMB
LML
HCM
HCA
LBC
CAC4
UCAC2
CAC-N
UCAC-N
RCS2
RCC2
PCC
SHC
MCP
GLC
MFC
BBS
RRC
GRC
RV3*
NHS
HRL
LN
Hand
Chuk
MecHnd/Chuk
ShkAbs
FJ
FK
SpdContr
Ending

Internal structure and parts list (high load ø32)

● USSD-KL-32-F (Internal structure varies depending on stroke.)
(Double acting/high load, with switch, forward locking: F)

150 stroke or less

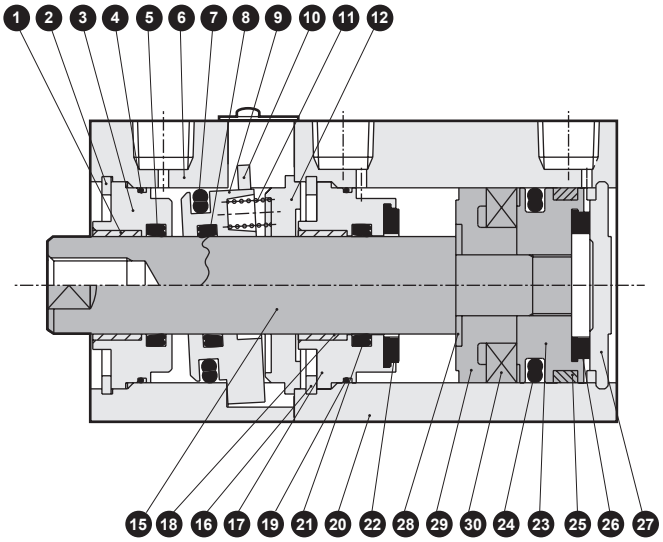

Over 150 to 300 stroke

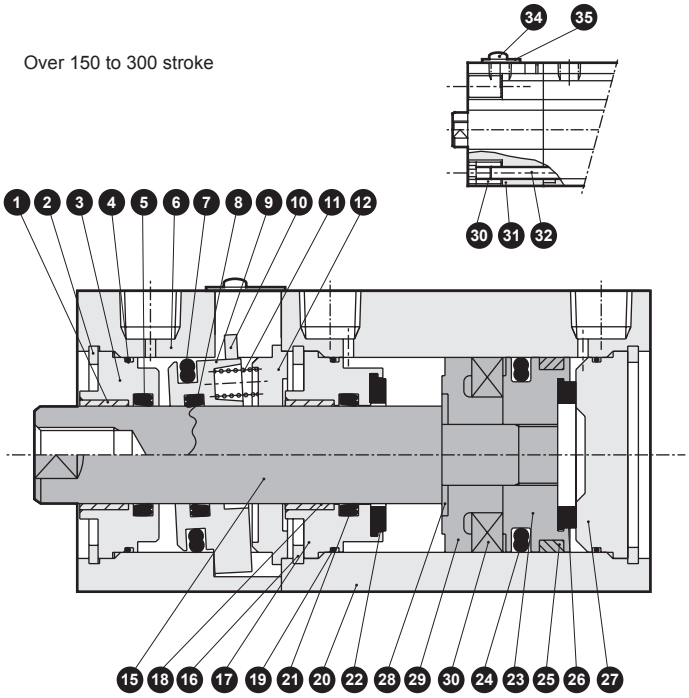

● USSD-K-32-F (Internal structure varies depending on stroke.)
(Double acting, high load, forward locking: F)

150 stroke or less

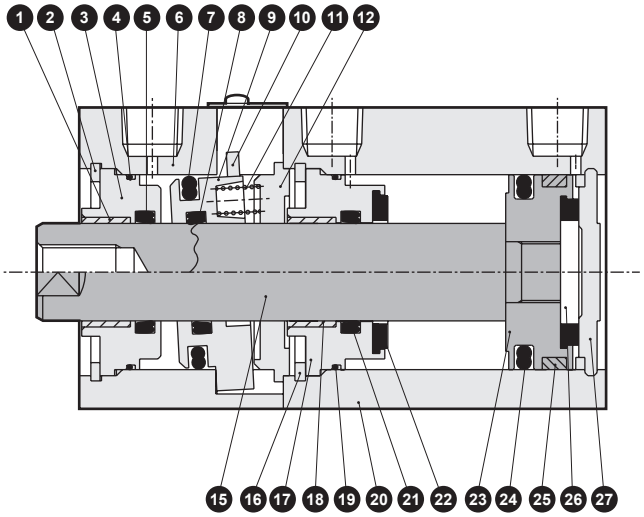

Over 150 to 300 stroke

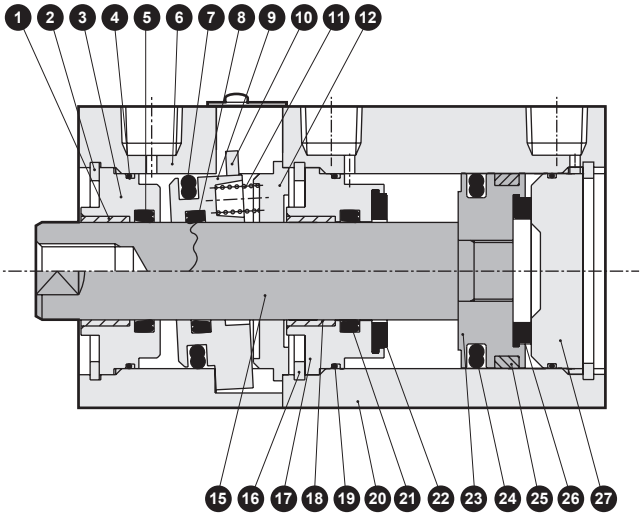

Cannot be disassembled

Parts list

No.	Part name	Material	Remarks	No.	Part name	Material	Remarks
1	Bush (2)	Dry bearing		10	Release lever	Steel	Black finish
2	C type snap ring (2)	Steel	Zinc phosphate film	11	Spring	Steel	Black finish
3	Rod metal (2)	Special aluminum	Alumite (*1)	12	Joint	Aluminum alloy	
4	Rod metal gasket (2)	Nitrile rubber		13	Rod metal gasket (3)	Nitrile rubber	(B type only)
5	Rod packing (2)	Nitrile rubber		14	Rod packing (4)	Nitrile rubber	(B type only)
6	Lock body	Aluminum alloy	Hard alumite	15	Piston rod	Stainless steel	Industrial chrome plating
7	Piston packing (2)	Nitrile rubber		16	C type snap ring (1)	Steel	Zinc phosphate film
8	Rod packing (3)	Nitrile rubber		17	Rod metal (1)	Special aluminum	Chromate
9	Lock metal	Special steel	Zinc chromate	18	Bush (1)	DU dry bearing	

*1: If the lock direction is F, chromate is used for the surface treatment.

Internal structure and parts list (high load ø32)

● USSD-KL-32-B (Internal structure varies depending on stroke.)
(Double acting/high load, with switch, backward locking: B)

150 stroke or less

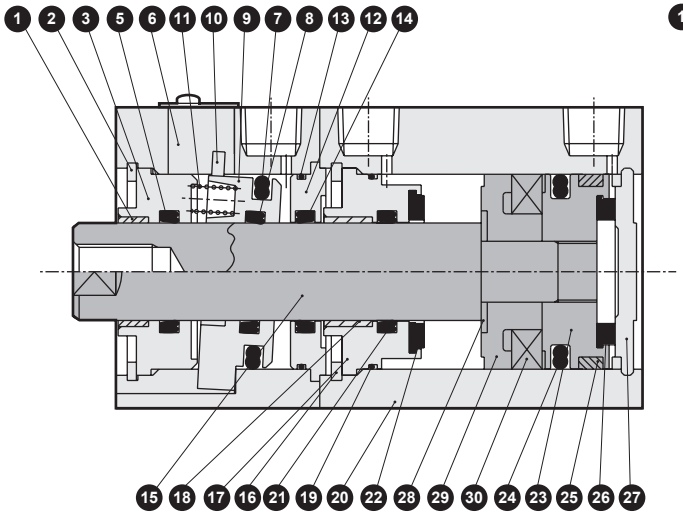

Over 150 to 300 stroke

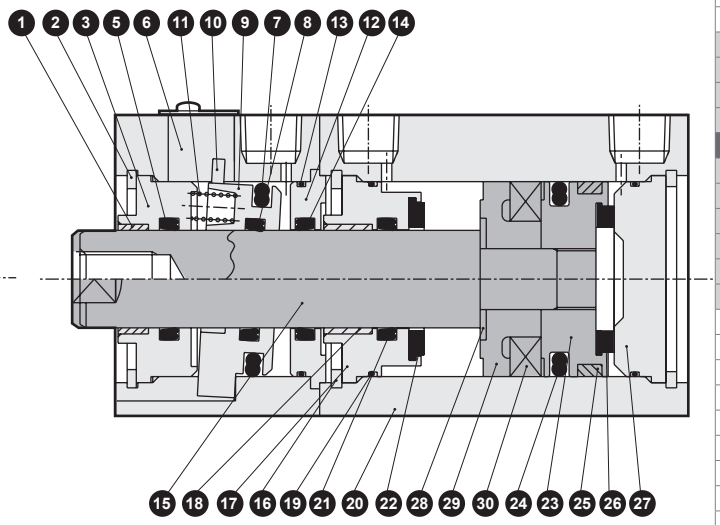

● USSD-K-32-B (Internal structure varies depending on stroke.)
(Double acting, high load, backward locking: B)

150 stroke or less

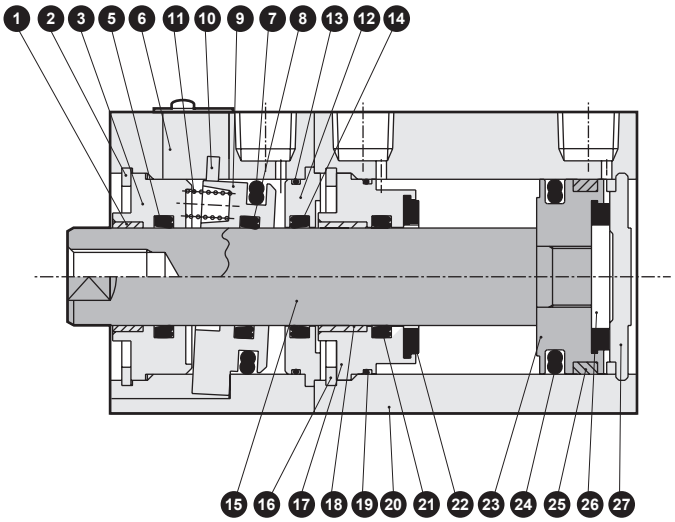

Over 150 to 300 stroke

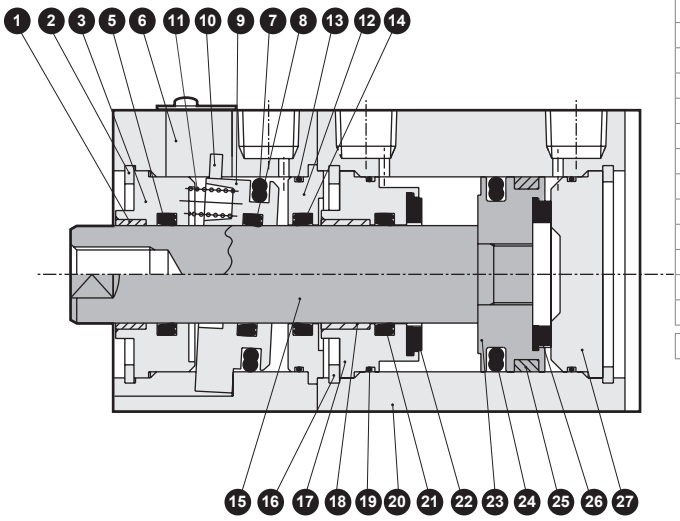

Cannot be disassembled

Parts list

No.	Part name	Material	Remarks	No.	Part name	Material	Remarks
19	Rod metal gasket (1)	Nitrile rubber		28	Spacer washer	Stainless steel	With switch only
20	Cylinder body	Aluminum alloy	Hard alumite	29	Spacer	Special resin	With switch only
21	Rod packing (1)	Nitrile rubber		30	Piston magnet	Plastic magnet	With switch only
22	Cushion rubber (R)	Urethane rubber		31	Round nut	Steel	Zinc chromate
23	Piston	Stainless steel		32	Conical spring washer	Steel	Black finish
24	Piston packing (1)	Nitrile rubber		33	Hexagon socket set screw	Steel	Black finish
25	Wear ring	Acetal resin		34	Cross-recessed round machine screw	Steel	
26	Cushion rubber (H)	Urethane rubber		35	Dust cover	Stainless steel	
27	Cover	Aluminum alloy	Chromate (*1)				

*1: For cover for long stroke, Remarks: Alumite

LCM
LCR
LCG
LCW
LCX
STM
STG
STS/STL
STR2
UCA2
ULK*
JSK/M2
JSG
JSC3/JSC4
USSD
UFCD
USC
UB
JSB3
LMB
LML
HCM
HCA
LBC
CAC4
UCAC2
CAC-N
UCAC-N
RCS2
RCC2
PCC
SHC
MCP
GLC
MFC
BBS
RRC
GRC
RV3*
NHS
HRL
LN
Hand
Chuk
MecHnd/Chuk
ShkAbs
FJ
FK
SpdContr
Ending

Internal structure and parts list (high load ø40, ø50)

[Common parts]

ø40, ø50

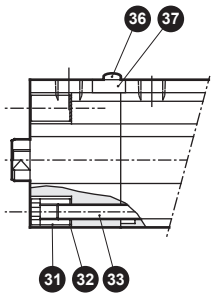

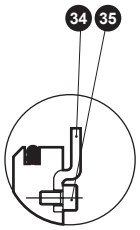

Release lever detailed drawing

● USSD-KL-40, 50-F (Internal structure varies depending on stroke.)
(Double acting/high load, with switch, forward locking: F)

ø40/ø50: 150 stroke or less

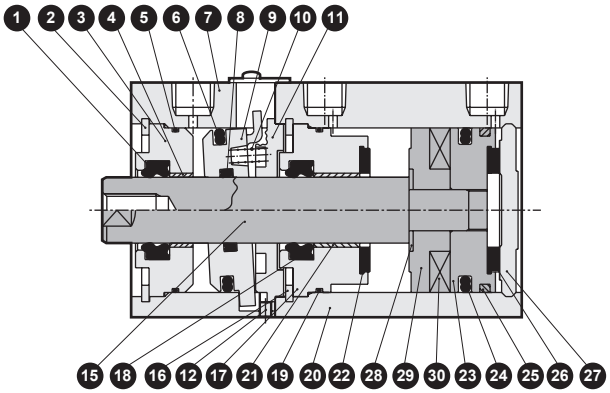

ø40/ø50: Over 150 to 300 stroke

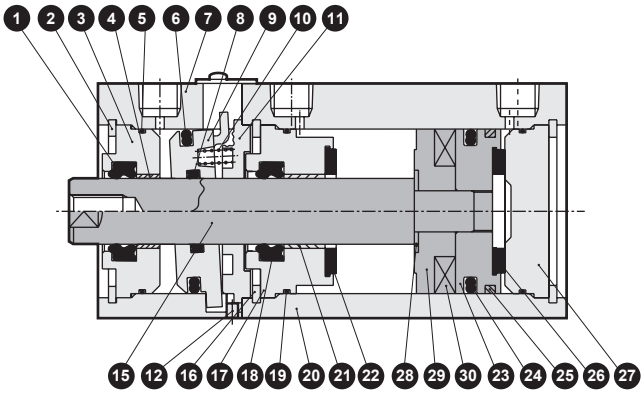

● USSD-K-40, 50-F (Internal structure varies depending on stroke.)
(Double acting, high load, forward locking: F)

ø40/ø50: 150 stroke or less

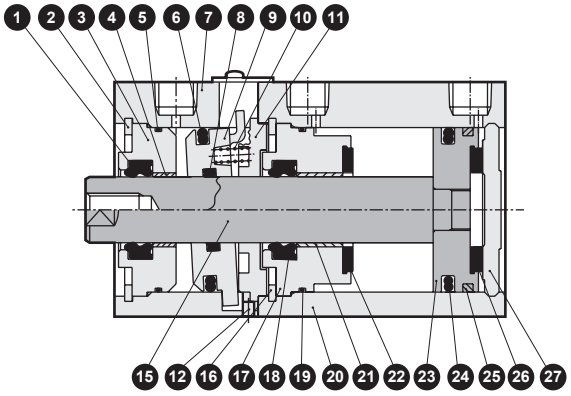

ø40/ø50: Over 150 to 300 stroke

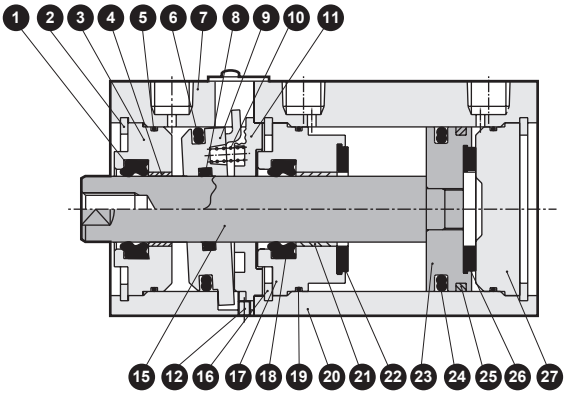

Cannot be disassembled

Parts list

No.	Part name	Material	Remarks	No.	Part name	Material	Remarks
1	Rod packing (2)	Nitrile rubber		10	Spring	Steel	Black finish
2	C type snap ring (2)	Steel	Zinc phosphate film	11	Joint	Aluminum alloy	
3	Rod metal (2)	Aluminum alloy	Alumite	12	Hexagon socket set screw	Steel	Black finish
4	Bush (2)	Dry bearing		13	Rod metal gasket (3)	Nitrile rubber	(B type only)
5	Rod metal gasket (2)	Nitrile rubber		14	Rod packing (4)	Nitrile rubber	(B type only)
6	Piston packing (2)	Nitrile rubber		15	Piston rod	Steel	Industrial chrome plating
7	Lock body	Aluminum alloy	Hard alumite	16	C type snap ring (1)	Steel	Zinc phosphate film
8	Rod packing (3)	Nitrile rubber		17	Rod metal (1)	Aluminum alloy	Chromate
9	Lock metal	Special steel	Zinc chromate	18	Rod packing (1)	Nitrile rubber	

Internal structure and parts list (high load ø40, ø50)

LCM
LCR
LCG
LCW
LCX
STM
STG
STS/STL
STR2
UCA2
ULK*
JSK/M2
JSG
JSC3/JSC4
USSD
UFCD
USC
UB
JSB3
LMB
LML
HCM
HCA
LBC
CAC4
UCAC2
CAC-N
UCAC-N
RCS2
RCC2
PCC
SHC
MCP
GLC
MFC
BBS
RRC
GRC
RV3*
NHS
HRL
LN
Hand
Chuk
MecHnd/Chuk
ShkAbs
FJ
FK
SpdContr
Ending

● USSD-KL-40, 50-B (Internal structure varies depending on stroke.)
(Double acting/high load, with switch, backward locking: B)

ø40/ø50: 150 stroke or less

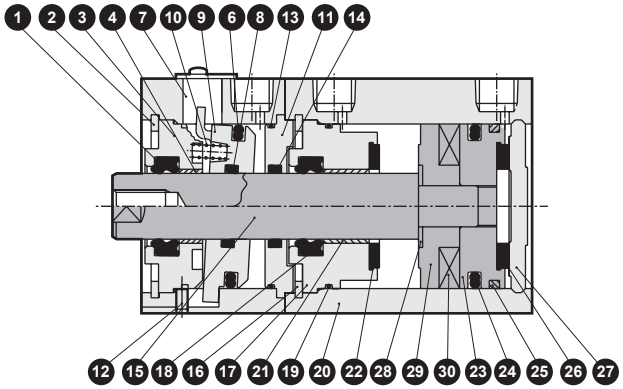

Over 150 to 300 stroke

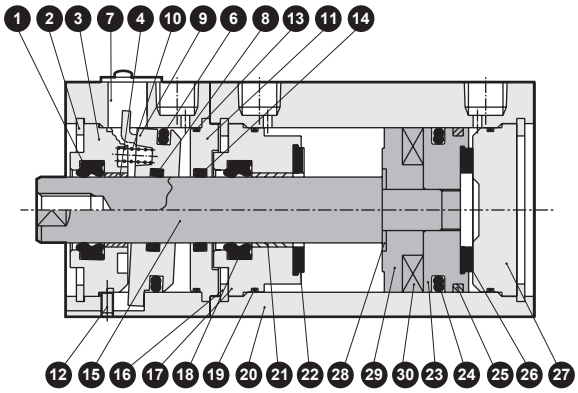

● USSD-K-40, 50-B (Internal structure varies depending on stroke.)
(Double acting, high load, backward locking: B)

ø40/ø50: 150 stroke or less

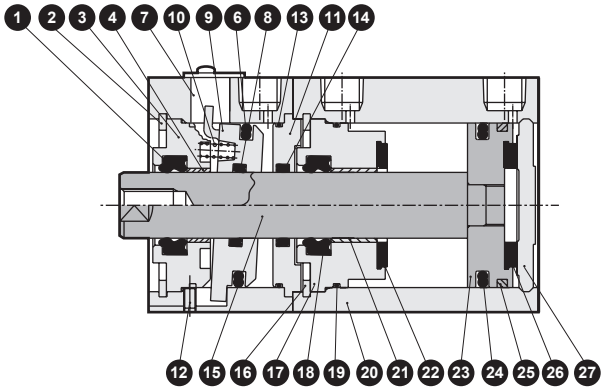

Over 150 to 300 stroke

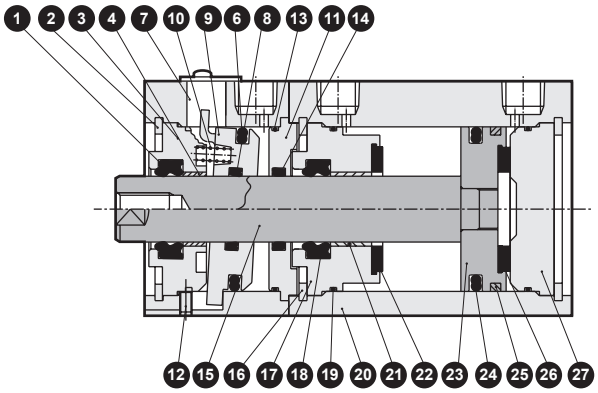

Cannot be disassembled

Parts list

No.	Part name	Material	Remarks	No.	Part name	Material	Remarks
19	Rod metal gasket (1)	Nitrile rubber		29	Spacer	Special resin	With switch only
20	Cylinder body	Aluminum alloy	Hard alumite	30	Piston magnet	Plastic magnet	With switch only
21	Bush (1)	Dry bearing		31	Round nut	Steel	Zinc chromate
22	Cushion rubber (R)	Urethane rubber		32	Conical spring washer	Steel	Black finish
23	Piston	Aluminum alloy		33	Hexagon socket set screw	Steel	Black finish
24	Piston packing (1)	Nitrile rubber		34	Release lever	Steel	Zinc chromate
25	Wear ring	Acetal resin		35	Hexagon socket head cap screw	Steel	Black finish
26	Cushion rubber (H)	Urethane rubber		36	Cross-recessed round machine screw	Steel	
27	Cover	Aluminum alloy	Chromate (*1)	37	Dust cover	Stainless steel	
28	Spacer washer	Stainless steel	With switch only				

*1: For cover for long stroke, Remarks: Alumite

LCM
LCR
LCG
LCW
LCX
STM
STG
STS/STL
STR2
UCA2
ULK*
JSK/M2
JSG
JSC3/JSC4
USSD
UFCD
USC
UB
JSB3
LMB
LML
HCM
HCA
LBC
CAC4
UCAC2
CAC-N
UCAC-N
RCS2
RCC2
PCC
SHC
MCP
GLC
MFC
BBS
RRC
GRC
RV3*
NHS
HRL
LN
Hand
Chuk
MecHnd/Chuk
ShkAbs
FJ
FK
SpdContr
Ending

Internal structure and parts list (high load ø63 to ø100)

[Common parts]

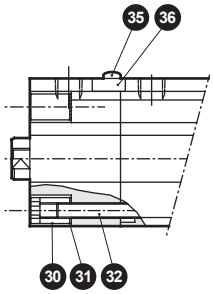

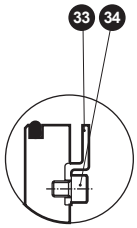

Release lever detailed drawing

● USSD-KL-63 to 100-F (Internal structure varies depending on stroke.)
(Double acting/high load, with switch, forward locking: F)

200 stroke or less

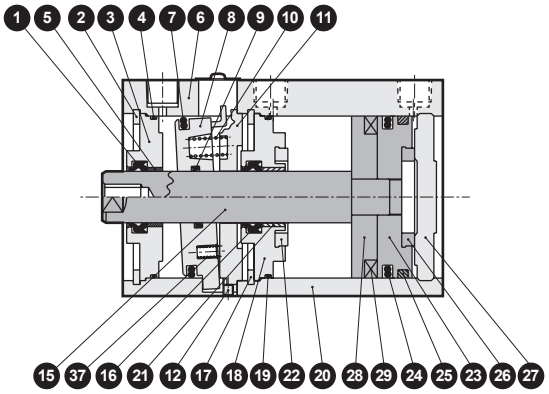

Over 200 to 300 stroke

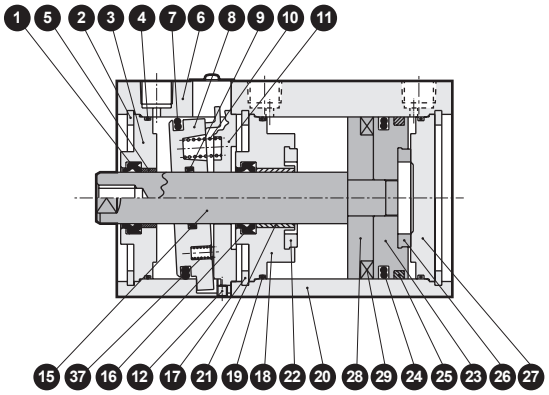

● USSD-K-63 to 100-F (Internal structure varies depending on stroke.)
(Double acting, high load, forward locking: F)

200 stroke or less

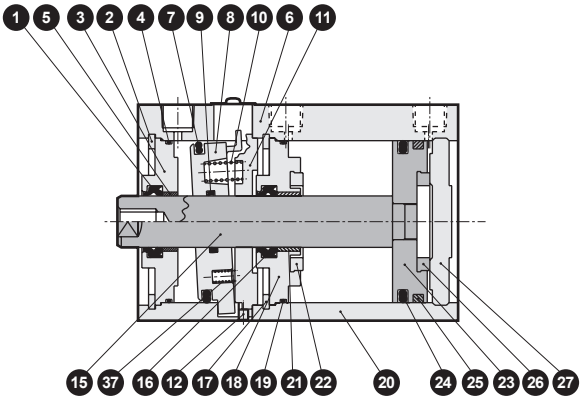

Over 200 to 300 stroke

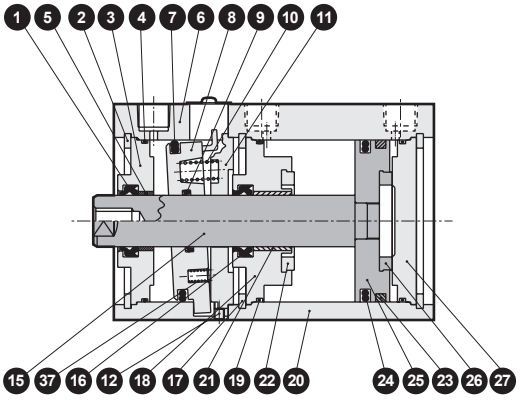

Cannot be disassembled

Parts list

No.	Part name	Material	Remarks	No.	Part name	Material	Remarks
1	Rod packing (2)	Nitrile rubber		10	Spring (1)	Steel	Black finish
2	C type snap ring (2)	Steel	Zinc phosphate film	11	Joint	Aluminum alloy	
3	Rod metal (2)	Aluminum alloy	Alumite	12	Hexagon socket set screw	Steel	Black finish
4	Rod metal gasket (2)	Nitrile rubber		13	Rod metal gasket (3)	Nitrile rubber	(B type only)
5	Bush (2)	Dry bearing		14	Rod packing (4)	Nitrile rubber	(B type only)
6	Lock body	Aluminum alloy	Hard alumite	15	Piston rod	Steel	Industrial chrome plating
7	Piston packing (2)	Nitrile rubber		16	Rod packing (1)	Nitrile rubber	
8	Lock metal	Special steel	Zinc chromate	17	C type snap ring (1)	Steel	Zinc phosphate film
9	Rod packing (3)	Nitrile rubber		18	Rod metal (1)	Aluminum alloy	Alumite

Internal structure and parts list (high load ø63 to ø100)

LCM
LCR
LCG
LCW
LCX
STM
STG
STS/STL
STR2
UCA2
ULK*
JSK/M2
JSG
JSC3/JSC4
USSD
UFCD
USC
UB
JSB3
LMB
LML
HCM
HCA
LBC
CAC4
UCAC2
CAC-N
UCAC-N
RCS2
RCC2
PCC
SHC
MCP
GLC
MFC
BBS
RRC
GRC
RV3*
NHS
HRL
LN
Hand
Chuk
MecHnd/Chuk
ShkAbs
FJ
FK
SpdContr
Ending

● USSD-KL-63 to 100-B (Internal structure varies depending on stroke.)
(Double acting/high load, with switch, backward locking: B)

200 stroke or less

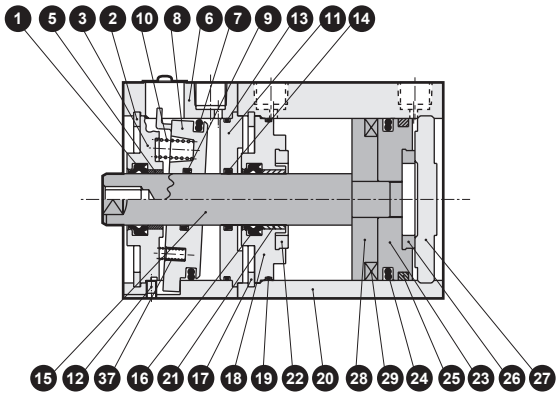

Over 200 to 300 stroke

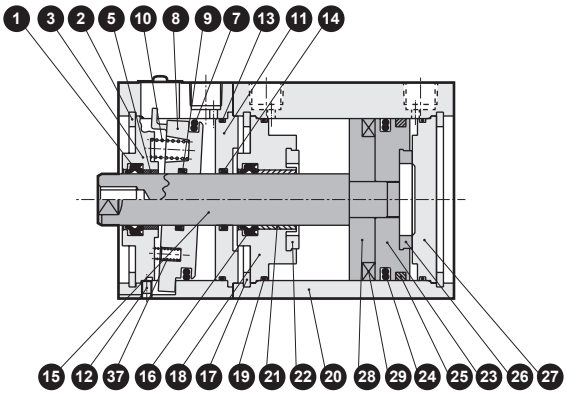

● USSD-K-63 to 100-B (Internal structure varies depending on stroke.)
(Double acting, high load, backward locking: B)

200 stroke or less

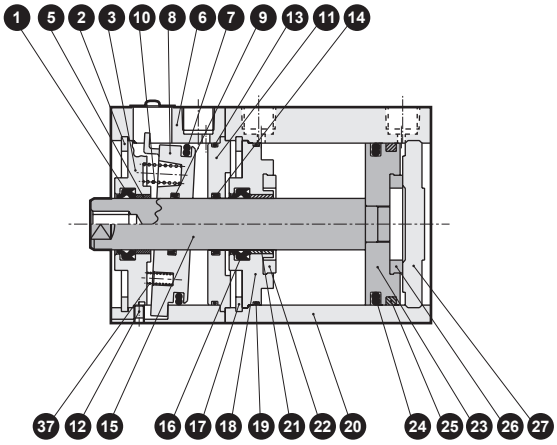

Over 200 to 300 stroke

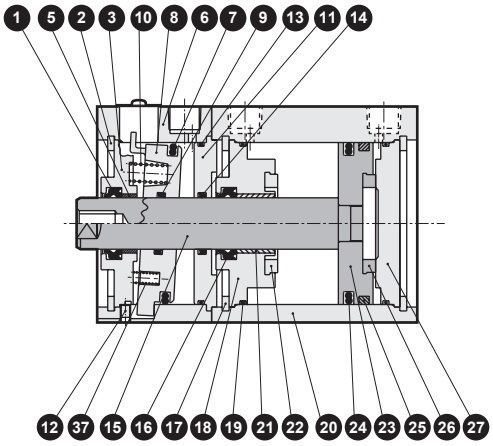

Cannot be disassembled

Parts list

No.	Part name	Material	Remarks	No.	Part name	Material	Remarks
19	Rod metal gasket (1)	Nitrile rubber		28	Spacer	Aluminum alloy	Chromate (with switch only)
20	Cylinder body	Aluminum alloy	Hard alumite	29	Piston magnet	Plastic magnet	With switch only
21	Bush (1)	Dry bearing		30	Round nut	Steel	Zinc chromate
22	Cushion rubber (R)	Urethane rubber		31	Conical spring washer	Steel	Black finish
23	Piston	Aluminum alloy	Chromate	32	Hexagon socket set screw	Steel	Black finish
24	Piston packing (1)	Nitrile rubber		33	Release lever	Steel	Zinc chromate
25	Wear ring	Acetal resin		34	Hexagon socket head cap screw	Steel	Black finish
26	Cushion rubber (H)	Urethane rubber		35	Cross-recessed round machine screw	Steel	
27	Cover	Aluminum alloy	Chromate (*1)	36	Dust cover	Stainless steel	
				37	Spring (2)	Steel	Black finish (ø80/ø100 only)

*1: For cover for long stroke, Remarks: Alumite

LCM
LCR
LCG
LCW
LCX
STM
STG
STS/STL
STR2
UCA2
ULK*
JSK/M2
JSG
JSC3/JSC4
USSD
UFCD
USC
UB
JSB3
LMB
LML
HCM
HCA
LBC
CAC4
UCAC2
CAC-N
UCAC-N
RCS2
RCC2
PCC
SHC
MCP
GLC
MFC
BBS
RRC
GRC
RV3*
NHS
HRL
LN
Hand
Chuk
MecHnd/Chuk
ShkAbs
FJ
FK
SpdContr
Ending

Dimensions (ø20, ø25) CAD

● USSD-20, 25
● USSD-L-20, 25 (with switch/TOH/V, T5H/V, T2H/V, T3H/V, T2WH/V, T3WH/V)

B type

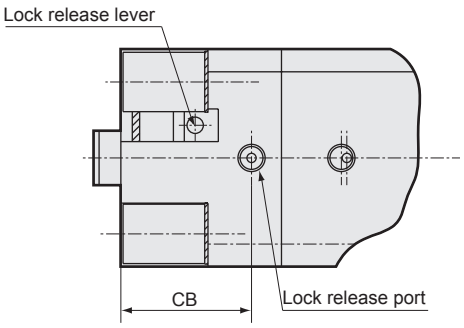

F type

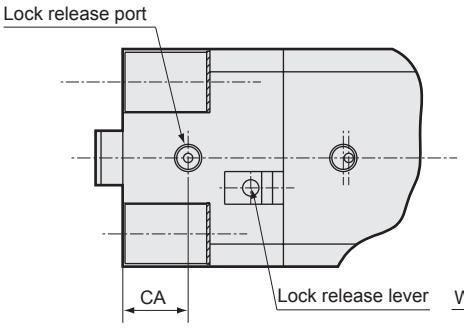

● Dimensions of rod end male thread part

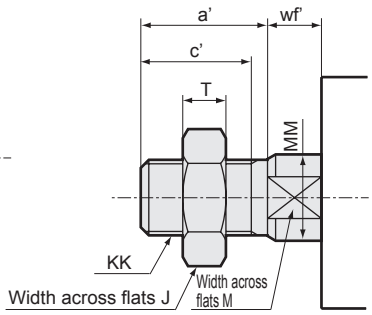

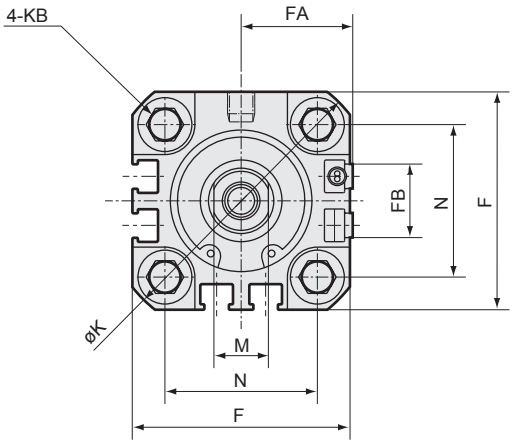

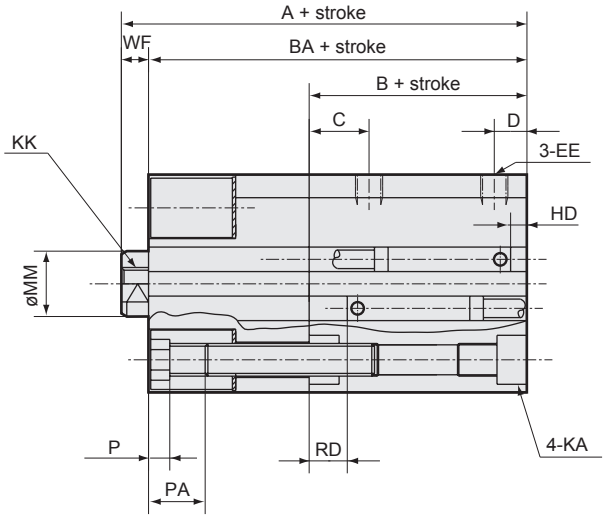

Code	Without switch			Common dimensions with switch										
Bore size (mm)	A *1	B *1	BA *1	A *1	B *1	BA *1	C	CA	CB	D	EE	F	FA	FB
ø20	51	19.5	46.5	61	29.5	56.5	8	10	22	5.5	M5	36	18.5	12.5
ø25	59	22.5	54	69	32.5	64	11	12	26	6	M5	40	20.5	13.5

Code	Common dimensions with switch									
Bore size (mm)	KB	K	KA	KK	M	MM	N	WF	P	PA
ø20	M6	47	9 spot face depth 5.5, M6 depth 11	M5 depth 7	8	10	25.5	4.5	3.5	10
ø25	M6	51	9 spot face depth 5.5, M6 depth 11	M6 depth 12	10	12	28	5	3.5	10

Code	Reed TOH/TOV, T5H/T5V		Proximity T2H/T2V, T3H/T3V		Proximity T2WH/T2WV, T3WH/T3WV	
Bore size (mm)	HD	RD	HD	RD	HD	RD
ø20	3	6.5	3	6.5	3	6.5
ø25	3	9.5	3	9.5	3	9.5

*1 : To calculate A + stroke, B + stroke or BA + stroke when using custom stroke, apply the next longer standard stroke (instead of the custom stroke) to the stroke value. (Example) If the custom stroke is 7 mm, apply the standard stroke of 10 mm.
*2 : HD and RD dimensions for 5 mm stroke differ from these dimensions according to the setting.

Rod end male thread part dimensions

Code / Bore size (mm)	a'	c'	J	KK	M	MM	T	wf'
ø20	14	12	13	M8	8	10	5	4.5
ø25	17.5	15	17	M10x1.25	10	12	6	5

Dimensions (ø20, ø25)

● USSD-L-20, 25 (2-color LED, off-delay, T2Y$^{H}/_{V}$, T3Y$^{H}/_{V}$, T2J$^{H}/_{V}$, T8$^{H}/_{V}$)

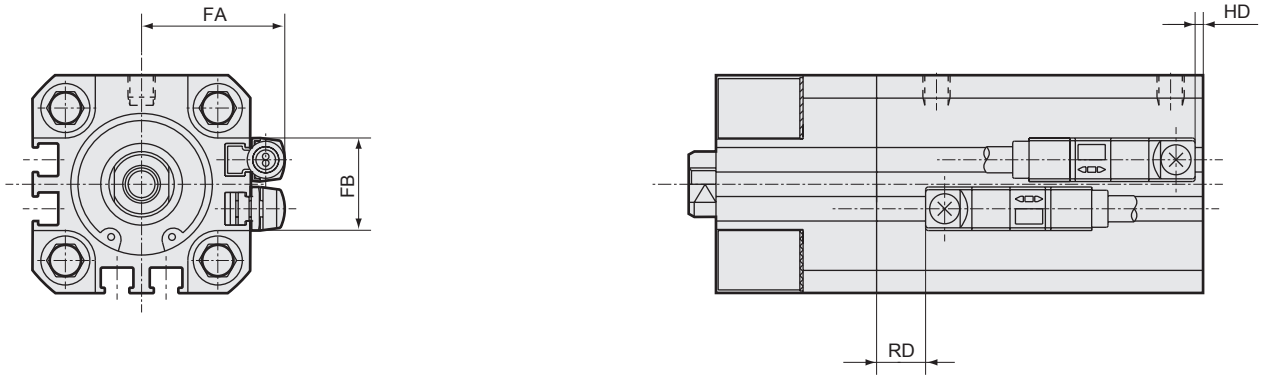

Code / Bore size (mm)	FA	FB	T2Y$^{H}/_{V}$,T3Y$^{H}/_{V}$,T2J$^{H}/_{V}$	
			RD	HD
ø20	24.3	16	5	1.5
ø25	26.3	17	8	1.5

● USSD-L-20, 25 (with T1* switch/T2YD, T2YDT, T1$^{H}/_{V}$)

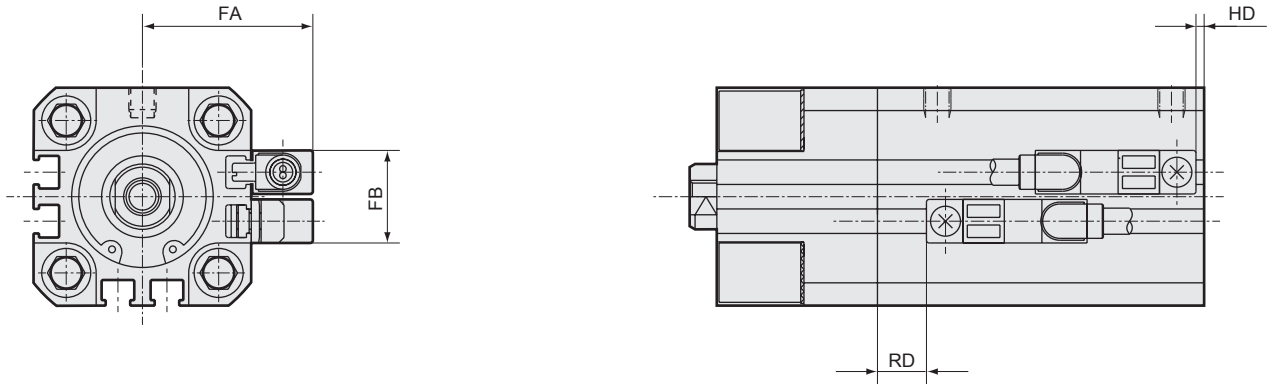

Code / Bore size (mm)	FA	FB	RD	HD
ø20	29.3	16	5	1.5
ø25	31.3	17	8	1.5

LCM
LCR
LCG
LCW
LCX
STM
STG
STS/STL
STR2
UCA2
ULK*
JSK/M2
JSG
JSC3/JSC4
USSD
UFCD
USC
UB
JSB3
LMB
LML
HCM
HCA
LBC
CAC4
UCAC2
CAC-N
UCAC-N
RCS2
RCC2
PCC
SHC
MCP
GLC
MFC
BBS
RRC
GRC
RV3*
NHS
HRL
LN
Hand
Chuk
MecHnd/Chuk
ShkAbs
FJ
FK
SpdContr
Ending

Dimensions (ø32 to ø63) CAD

● USSD-32 to 63
● USSD-L-32 to 63 (with switch/TOH/V, T5H/V, T2H/V, T3H/V, T2WH/V, T3WH/V)

B type

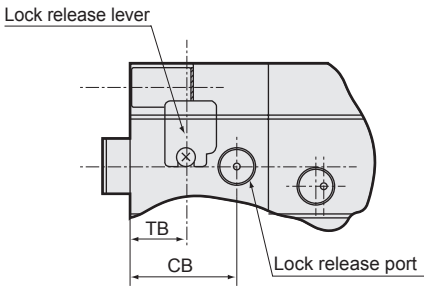

F type

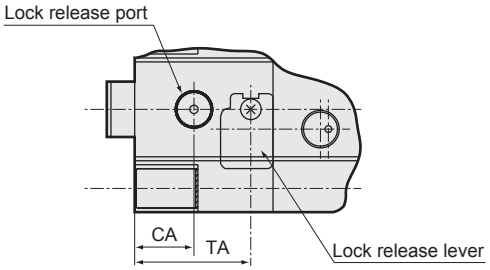

● Dimensions of rod end male thread part

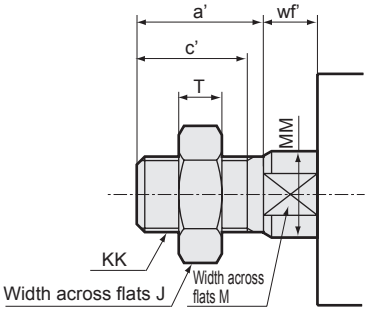

Note) The figure below shows F type.

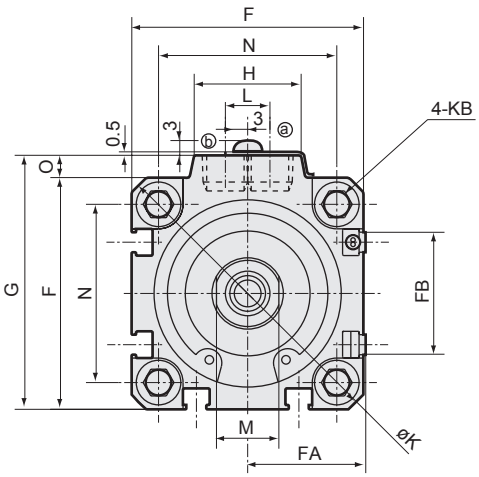

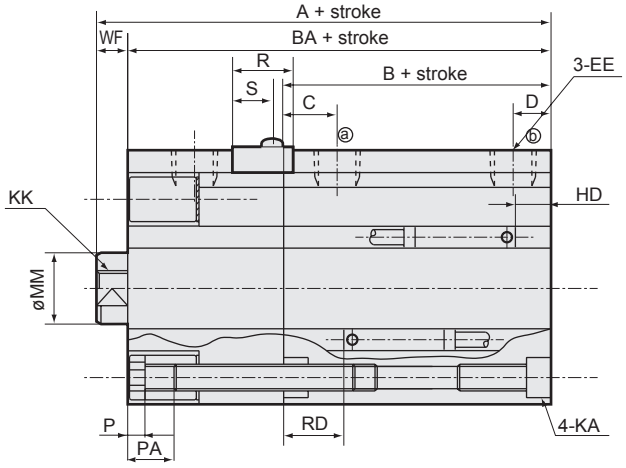

Code / Bore size (mm)	Without switch A *1	B *1	BA *1	Common dimensions with switch A *1	B *1	BA *1	C	CA	CB	D	EE	F	FA	FB	G
ø32	63.5	23	56.5	73.5	33	66.5	8	12	25.5	8	RC1/8	45	23	20.5	49.5
ø40	71.5	29.5	64.5	81.5	39.5	74.5	12	15	27	8.5	RC1/8	52	26.5	27.5	57
ø50	77.5	30.5	69.5	87.5	40.5	79.5	10.5	15	30	10.5	RC1/4	64	32.5	28.5	71
ø63	88.5	36	80.5	98.5	46	90.5	13	15.5	34	11	RC1/4	77	39	28.5	84

Code / Bore size (mm)	Common dimensions with switch H	KB	K	KA	KK	L	M	MM	N	O	WF	P	PA
ø32	24	M6	60	9 spot face depth 5.5, M6 depth 11	M8 depth 13	10	14	16	34	4.5	7	3.5	10
ø40	24	M6	69	9 spot face depth 5.5, M6 depth 11	M8 depth 13	10	14	16	40	5	7	3.5	10
ø50	33	M8	86	11 spot face depth 6.5, M8 depth 13	M10 depth 15	15	17	20	50	7	8	4	12.5
ø63	33	M10	103	14 spot face depth 9, M10 depth 25	M10 depth 15	15	17	20	60	7	8	4	13.5

Code / Bore size (mm)	R	S	TA	TB	Reed TOH/TOV, T5H/T5V HD *2	RD *2	Proximity T2H/T2V, T3H/T3V HD *2	RD *2	Proximity T2WH/T2WV, T3WH/T3WV HD *2	RD *2
ø32	14	9	29.5	12.4	3.5	9	3.5	9	3.5	9
ø40	12	6	30.3	14.7	7.0	12.0	7.0	12.0	7.0	12.0
ø50	14	7	33	15.7	7.5	12.5	7.5	12.5	7.5	12.5
ø63	17	8.5	37	16.2	12.5	13.0	12.5	13.0	12.5	13.0

*1 : To calculate A + stroke, B + stroke or BA + stroke when using custom stroke,
apply the next longer standard stroke (instead of the custom stroke) to the stroke value.
(Example) If the custom stroke is 7 mm, apply the standard stroke of 10 mm.
*2 : HD and RD dimensions for 5 mm stroke differ from these dimensions according to the setting.

Rod end male thread part dimensions

Code / Bore size (mm)	a'	c'	J	KK	M	MM	T	wf'
ø32	23.5	20.5	22	M14x1.5	14	16	8	5
ø40	23.5	20.5	22	M14x1.5	14	16	8	5
ø50	28.5	26	27	M18x1.5	17	20	11	5
ø63	28.5	26	27	M18x1.5	17	20	11	5

Dimensions (ø32 to ø63)

● USSD-L-32 to 63 (2-color LED, off-delay, T8* with switch T2Y$^{H}/_{V}$, T3Y$^{H}/_{V}$, T2J$^{H}/_{V}$, T8$^{H}/_{V}$)

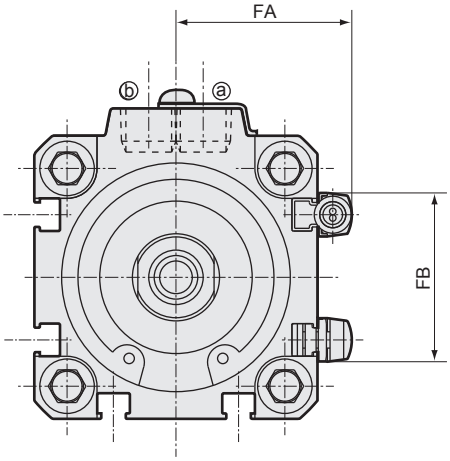

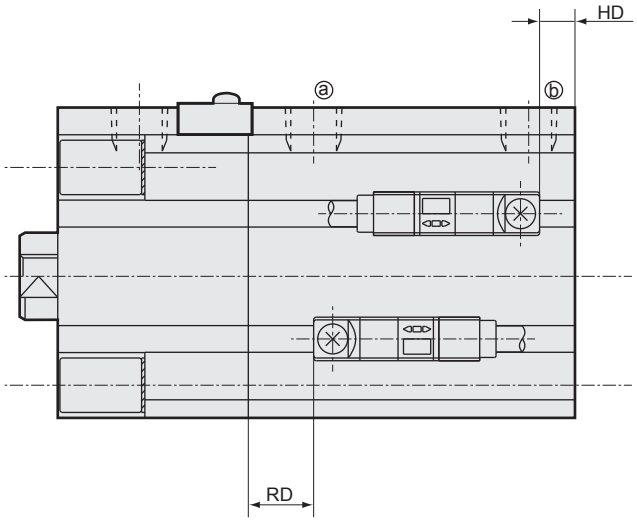

Note) The figure above shows F type.

Code / Bore size (mm)	FA	FB	T2Y$^{H}/_{V}$,T3Y$^{H}/_{V}$,T2J$^{H}/_{V}$		T8$^{H}/_{V}$	
			RD	HD	RD	HD
ø32	28.8	24	7.5	2	-	-
ø40	32.3	31	10.5	5.5	6	1
ø50	38.3	32	11	6	6.5	1.5
ø63	44.8	32	11.5	11	7	6.5

● USSD-L-32 to 63 (with T1* switch/T2YD, T2YDT, T1$^{H}/_{V}$)

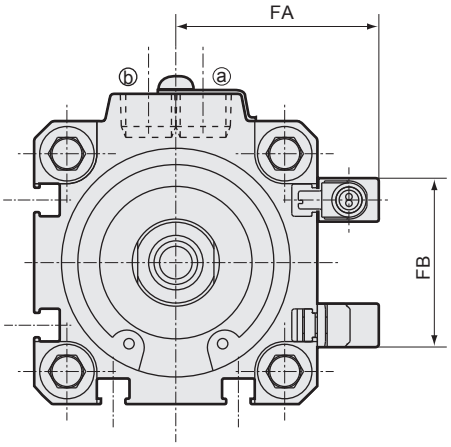

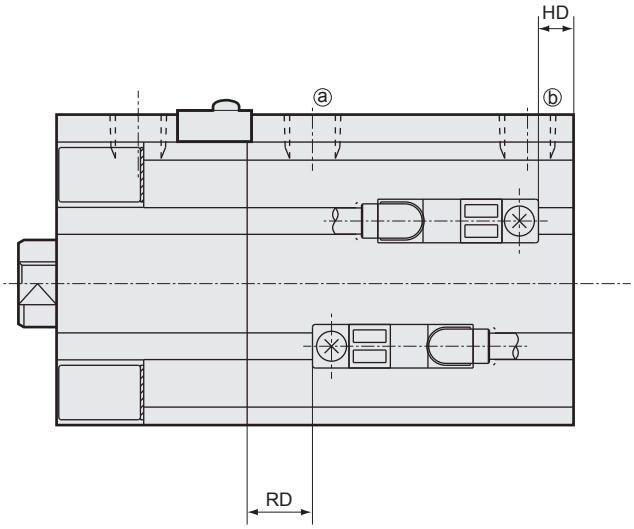

Note) The figure above shows F type.

Code / Bore size (mm)	FA	FB	RD	HD
ø32	33.8	24	7.5	2
ø40	37.3	31	10.5	5.5
ø50	43.3	32	11	6
ø63	49.8	32	11.5	11

LCM
LCR
LCG
LCW
LCX
STM
STG
STS/STL
STR2
UCA2
ULK*
JSK/M2
JSG
JSC3/JSC4
USSD
UFCD
USC
UB
JSB3
LMB
LML
HCM
HCA
LBC
CAC4
UCAC2
CAC-N
UCAC-N
RCS2
RCC2
PCC
SHC
MCP
GLC
MFC
BBS
RRC
GRC
RV3*
NHS
HRL
LN
Hand
Chuk
MecHnd/Chuk
ShkAbs
FJ
FK
SpdContr
Ending

Dimensions (ø80)

- USSD-80
- USSD-L-80 (with switch/TOH/V, T5H/V, T2H/V, T3H/V, T2WH/V, T3WH/V)

B type

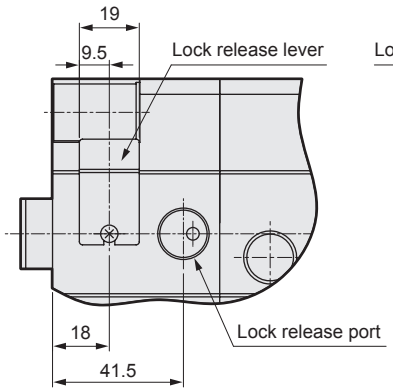

F type

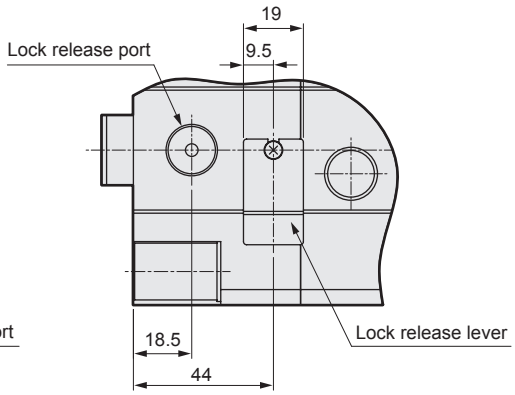

- Dimensions of rod end male thread part

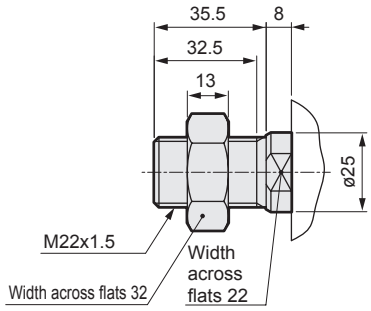

Note) The figure below shows F type.

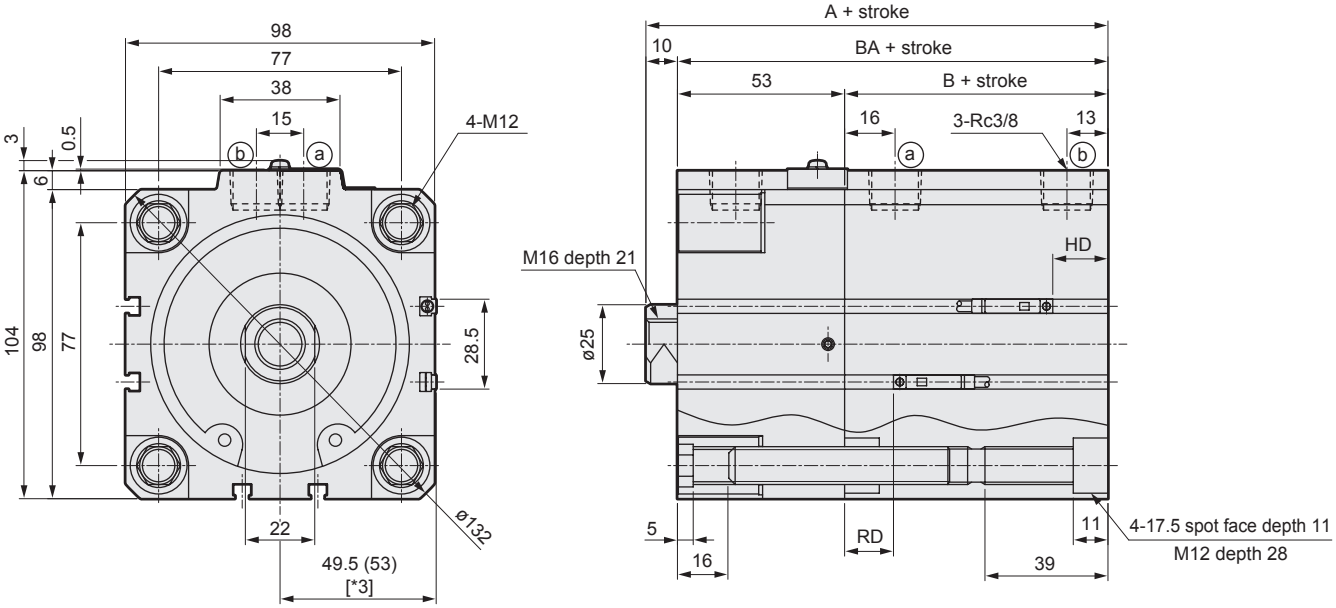

Code	Without switch			With switch			Reed T0H/T0V, T5H/T5V		Proximity T2H/T2V, T3H/T3V		Proximity T2WH/T2WV, T3WH/T3WV	
Bore size (mm)	A *1	B *1	BA *1	A *1	B *1	BA *1	HD *1	RD *1	HD *1	RD *1	HD *1	RD *1
ø80	106.5	43.5	96.5	116.5	53.5	106.5	17.5	15.5	17.5	15.5	17.5	15.5

*1 : To calculate A+ stroke or B+ stroke when using a custom stroke,
apply the next longer standard stroke instead of the custom stroke.
(Example) If the custom stroke is 7 mm, apply the standard stroke of 10 mm.
*2 : HD and RD dimensions for 5 mm stroke differ from these dimensions according to the setting.
*3 : Dimensions in ( ) are for the radial lead wire.

Dimensions (ø100)

● USSD-100
● USSD-L-100 (with switch/TOH/V, T5H/V, T2H/V, T3H/V, T2WH/V, T3WH/V)

B type

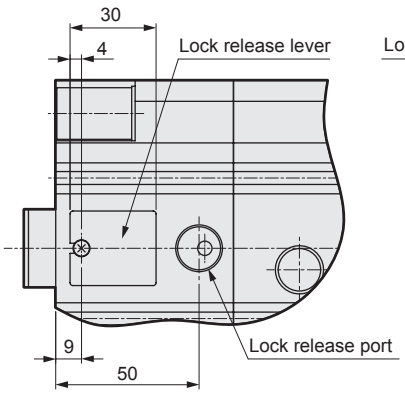

F type

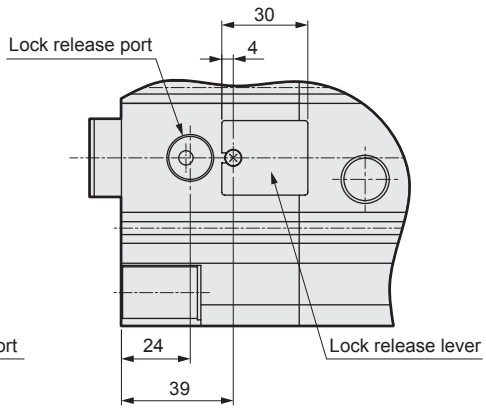

● Dimensions of rod end male thread part

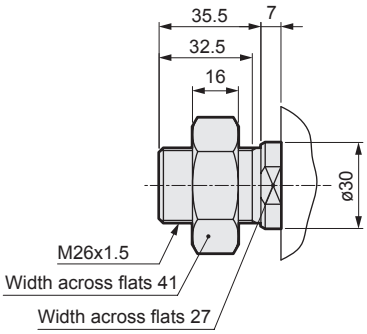

Note) The figure below shows F type.

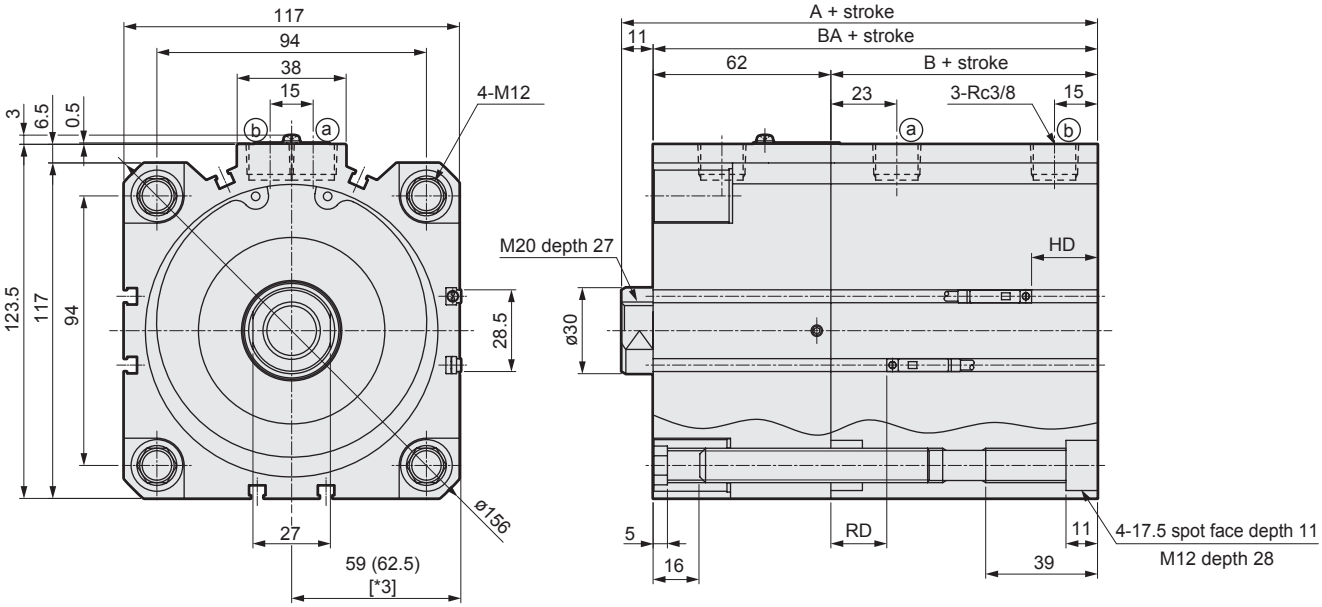

Code	Without switch			With switch			Reed T0H/T0V, T5H/T5V		Proximity T2H/T2V, T3H/T3V		Proximity T2WH/T2WV, T3WH/T3WV	
Bore size (mm)	A *1	B *1	BA *1	A *1	B *1	BA *1	HD *1	RD *1	HD *1	RD *1	HD *1	RD *1
ø100	126	53	115	136	63	125	23	19.5	23	19.5	23	19.5

*1 : To calculate A+ stroke or B+ stroke when using custom stroke,
apply the next longer standard stroke (instead of the custom stroke) to the stroke value.
(Example) If the custom stroke is 7 mm, apply the standard stroke of 10 mm.
*2 : HD and RD dimensions for 5 mm stroke differ from these dimensions according to the setting.
*3 : Dimensions in ( ) are for the radial lead wire.

LCM
LCR
LCG
LCW
LCX
STM
STG
STS/STL
STR2
UCA2
ULK*
JSK/M2
JSG
JSC3/JSC4
USSD
UFCD
USC
UB
JSB3
LMB
LML
HCM
HCA
LBC
CAC4
UCAC2
CAC-N
UCAC-N
RCS2
RCC2
PCC
SHC
MCP
GLC
MFC
BBS
RRC
GRC
RV3*
NHS
HRL
LN
Hand
Chuk
MecHnd/Chuk
ShkAbs
FJ
FK
SpdContr
Ending

Dimensions (ø80 to ø100) CAD

● USSD-L-80 to 100 (with 2-color LED, off-delay, T8* with switch T2Y$^{H}/_{V}$, T3Y$^{H}/_{V}$, T2J$^{H}/_{V}$, T8$^{H}/_{V}$)

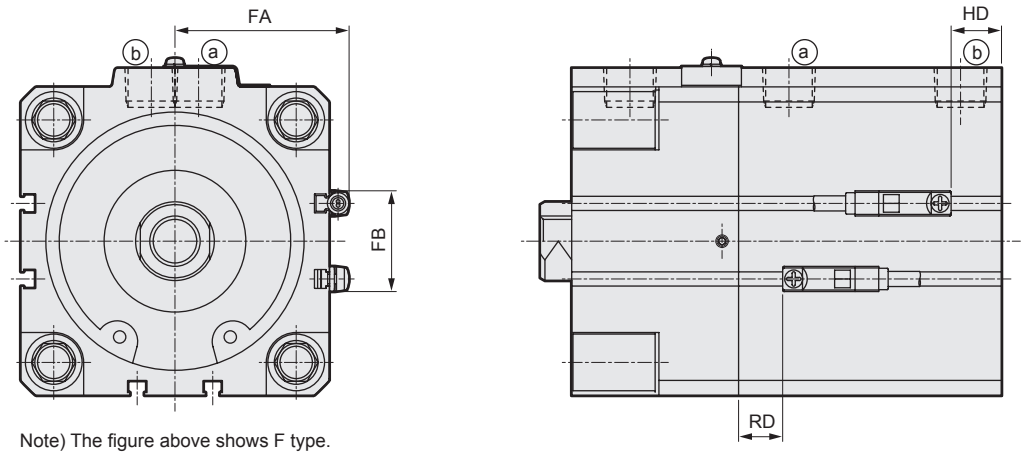

Note) The figure above shows F type.

Code / Bore size (mm)	FA	FB	T2Y$^{H}/_{V}$,T3Y$^{H}/_{V}$,T2J$^{H}/_{V}$		T8$^{H}/_{V}$	
			RD	HD	RD	HD
ø80	55.3	32	14	16	9.5	11.5
ø100	64.8	32	18	21.5	13.5	7

● USSD-L-80 to 100 (with T1* switch T1$^{H}/_{V}$)

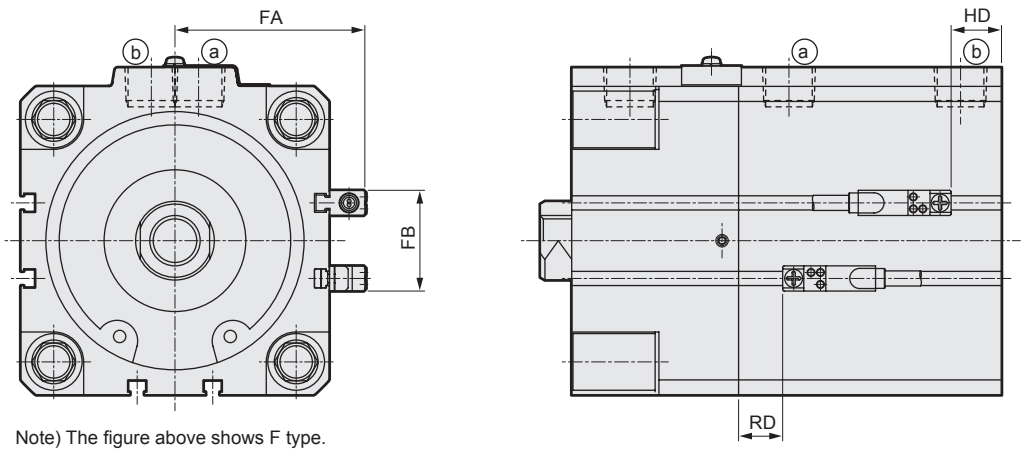

Note) The figure above shows F type.

Code / Bore size (mm)	FA	FB	RD	HD
ø80	60.3	32	14	16
ø100	69.8	32	18	21.5

MEMO

LCM
LCR
LCG
LCW
LCX
STM
STG
STS/STL
STR2
UCA2
ULK*
JSK/M2
JSG
JSC3/JSC4
USSD
UFCD
USC
UB
JSB3
LMB
LML
HCM
HCA
LBC
CAC4
UCAC2
CAC-N
UCAC-N
RCS2
RCC2
PCC
SHC
MCP
GLC
MFC
BBS
RRC
GRC
RV3*
NHS
HRL
LN
Hand
Chuk
MecHnd/Chuk
ShkAbs
FJ
FK
SpdContr
Ending

Dimensions (high load ø20, ø25)

CAD

● USSD-K-20, 25
● USSD-KL-20, 25 (with switch/TOH/V, T5H/V, T2H/V, T3H/V, T2WH/V, T3WH/V)

B type

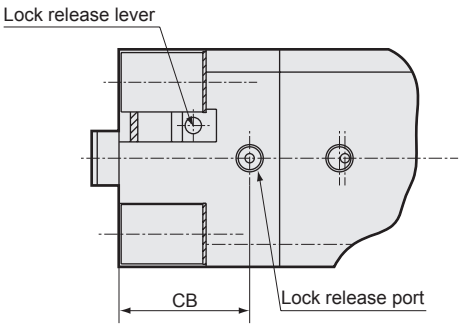

F type

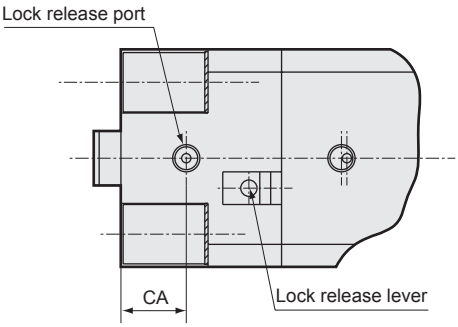

● Dimensions of rod end male thread part

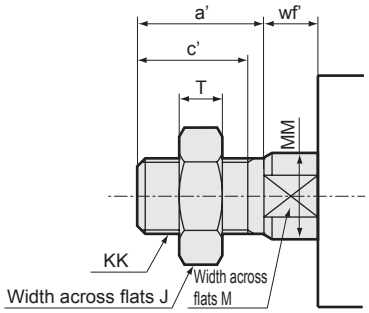

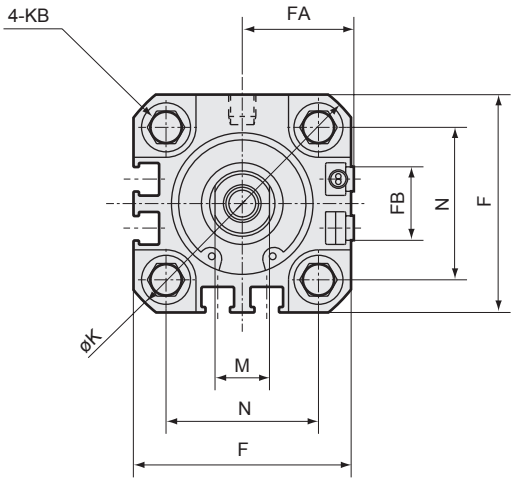

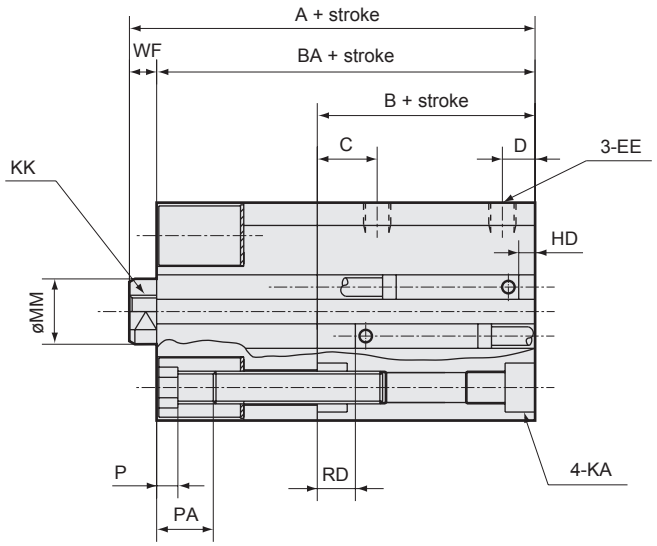

Code	Without switch			Common dimensions with switch										
Bore size (mm)	A *1 *2	B *1 *2	BA *1 *2	A *1 *2	B *1 *2	BA *1 *2	C	CA	CB	D	EE	F	FA	FB
ø20	56(67.5)	24.5(36)	51.5(63)	66(77.5)	34.5(46)	61.5(73)	8	10	22	5.5(8)	M5	36	18.5	12.5
ø25	64(77.5)	27.5(41)	59(72.5)	74(87.5)	37.5(51)	69(82.5)	11	12	26	6(11)	M5	40	20.5	13.5

Code	Common dimensions with switch									
Bore size (mm)	KB	K	KA	KK	M	MM	N	WF	P	PA
ø20	M6	47	9 spot face depth 5.5, M6 depth 11	M5 depth 7	8	10	25.5	4.5	3.5	10
ø25	M6	51	9 spot face depth 5.5, M6 depth 11	M6 depth 7	10	12	28	5	3.5	10

Code	Reed TOH/TOV, T5H/T5V		Proximity T2H/T2V, T3H/T3V		Proximity T2WH/T2WV, T3WH/T3WV	
Bore size (mm)	HD *2 *3	RD *2 *3	HD *2 *3	RD *2 *3	HD *2 *3	RD *2 *3
ø20	6.0(12.5)	8.5(13.5)	6(12.5)	8.5(13.5)	6(12.5)	8.5(13.5)
ø25	5.5(14)	12(17)	5.5(14)	12(17)	5.5(14)	12(17)

*1 : To calculate A+ stroke, B+ stroke or BA+ stroke when using a custom stroke,
apply the next longer standard stroke instead of the custom stroke.
(Example) If the custom stroke is 7 mm, apply the standard stroke of 10 mm.
*2 : When longer than ø20: 100 mm stroke or ø25: 150 mm stroke, A, B, BA, D, HD, and RD dimensions are indicated in ( ) and there is no KA spot face.
*3 : HD and RD dimensions for 5-stroke will be adjusted at product shipment and are thus different from these.

Rod end male thread part dimensions								
Code / Bore size (mm)	a'	c'	J	KK	M	MM	T	wf'
ø20	14	12	13	M8	8	10	5	4.5
ø25	17.5	15	17	M10x1.25	10	12	6	5

Dimensions (high load (ø32 to ø63)

CAD

- USSD-K-32 to 63
- USSD-KL-32 to 63 (with switch/TOH/V, T5H/V, T2H/V, T3H/V, T2WH/V, T3WH/V)

B type

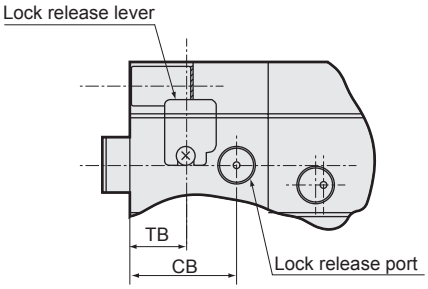

F type

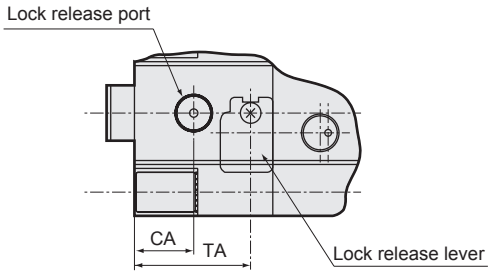

● Dimensions of rod end male thread part

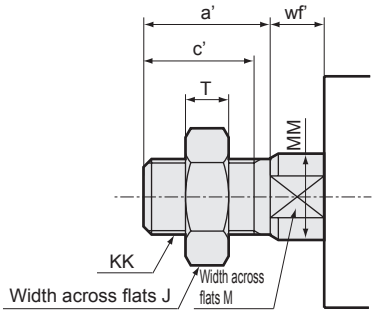

Note) The figure below shows F type.

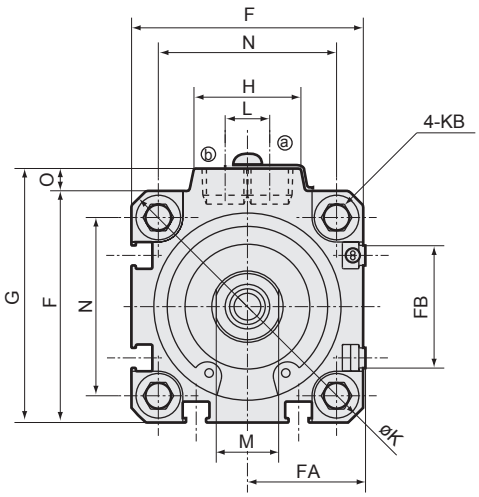

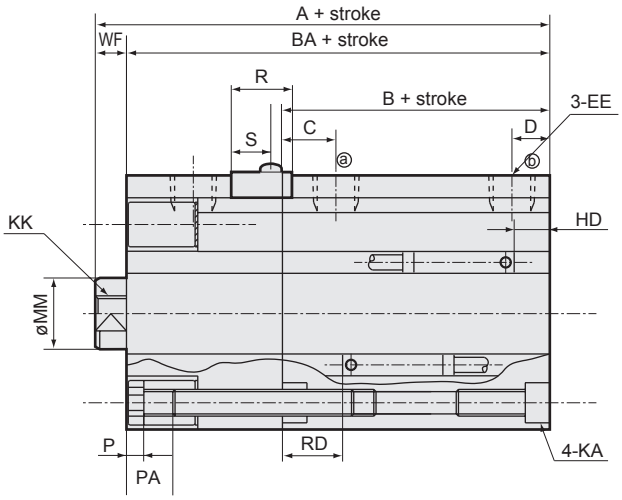

Code / Bore size (mm)	Without switch A *1	B *1	BA *1	Common dimensions with switch A *1	B *1	BA *1	C	CA	CB	D	EE	F	FA	FB	G
ø32	73.5(81)	33(40.5)	66.5(74)	83.5(91)	43(50.5)	76.5(84)	8	12	25.5	8	RC1/8	45	23	20.5	49.5
ø40	81.5(91)	39.5(49)	74.5(84)	91.5(101)	49.5(59)	84.5(94)	12	15	27	8.5(12)	RC1/8	52	26.5	27.5	57
ø50	87.5(101)	40.5(54)	79.5(93)	97.5(111)	50.5(64)	89.5(103)	10.5	15	30	10.5	RC1/4	64	32.5	28.5	71
ø63	98.5(108.5)	46(56)	90.5(100.5)	108.5(118.5)	56(66)	100.5(110.5)	13	15.5	34	11(13)	RC1/4	77	39	28.5	84

Code / Bore size (mm)	Common dimensions with switch H	KB	K	KA	KK	L	M	MM	N	O	WF	P	PA
ø32	24	M6	60	9 spot face depth 5.5, M6 depth 11	M8 depth 13	10	14	16	34	4.5	7	3.5	10
ø40	24	M6	69	9 spot face depth 5.5, M6 depth 11	M8 depth 13	10	14	16	40	5	7	3.5	10
ø50	33	M8	86	11 spot face depth 6.5, M8 depth 13	M10 depth 15	15	17	20	50	7	8	4	12.5
ø63	33	M10	103	14 spot face depth 9, M10 depth 25	M10 depth 15	15	17	20	60	7	8	4	13.5

Code / Bore size (mm)	R	S	TA	TB	Reed TOH/TOV, T5H/T5V HD *2	RD *2	Proximity T2H/T2V, T3H/T3V HD *2	RD *2	Proximity T2WH/T2WV, T3WH/T3WV HD *2	RD *2
ø32	14	9	29.5	12.4	8.5(16)	14(14)	8.5(16)	14(14)	8.5(16)	14(14)
ø40	12	6	30.3	14.7	9.5(19)	19.5(19.5)	9.5(19)	19.5(19.5)	9.5(19)	19.5(19.5)
ø50	14	7	33	15.7	10(19)	20(25)	10(19)	20(25)	10(19)	20(25)
ø63	17	8.5	37	16.2	17.5(23)	18(23)	17.5(23)	18(23)	17.5(23)	18(23)

*1 : To calculate A+ stroke, B+ stroke or BA+ stroke when using a custom stroke,
apply the next longer standard stroke instead of the custom stroke.
(Example) If the custom stroke is 7 mm, apply the standard stroke of 10 mm.
*2 : When longer than ø32 to ø50: 150 mm stroke or ø63: 200 mm stroke, A, B, BA, HD, D, and RD dimensions are indicated in ( ), and there is no KA spot face.
*3 : HD and RD dimensions for 5-stroke will be adjusted at product shipment and are thus different from these.

Rod end male thread part dimensions

Code / Bore size (mm)	a'	c'	J	KK	M	MM	T	wf'
ø32	23.5	20.5	22	M14x1.5	14	16	8	5
ø40	23.5	20.5	22	M14x1.5	14	16	8	5
ø50	28.5	26	27	M18x1.5	17	20	11	5
ø63	28.5	26	27	M18x1.5	17	20	11	5

LCM
LCR
LCG
LCW
LCX
STM
STG
STS/STL
STR2
UCA2
ULK*
JSK/M2
JSG
JSC3/JSC4
USSD
UFCD
USC
UB
JSB3
LMB
LML
HCM
HCA
LBC
CAC4
UCAC2
CAC-N
UCAC-N
RCS2
RCC2
PCC
SHC
MCP
GLC
MFC
BBS
RRC
GRC
RV3*
NHS
HRL
LN
Hand
Chuk
MecHnd/Chuk
ShkAbs
FJ
FK
SpdContr
Ending

Dimensions (high load ø80)

CAD

● USSD-K-80
● USSD-KL-80 (with switch/TOH/V, T5H/V, T2H/V, T3H/V, T2WH/V, T3WH/V)

B type

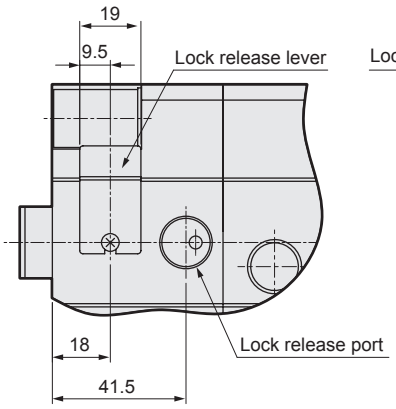

F type

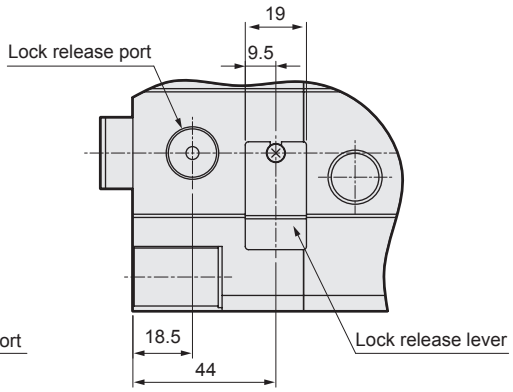

● Dimensions of rod end male thread part

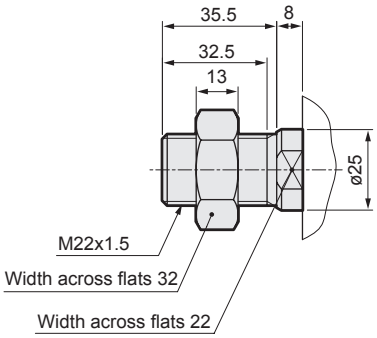

Note) The figure below shows F type.

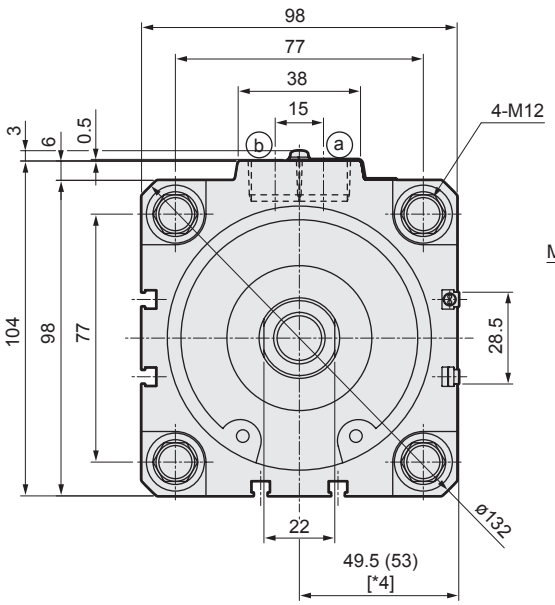

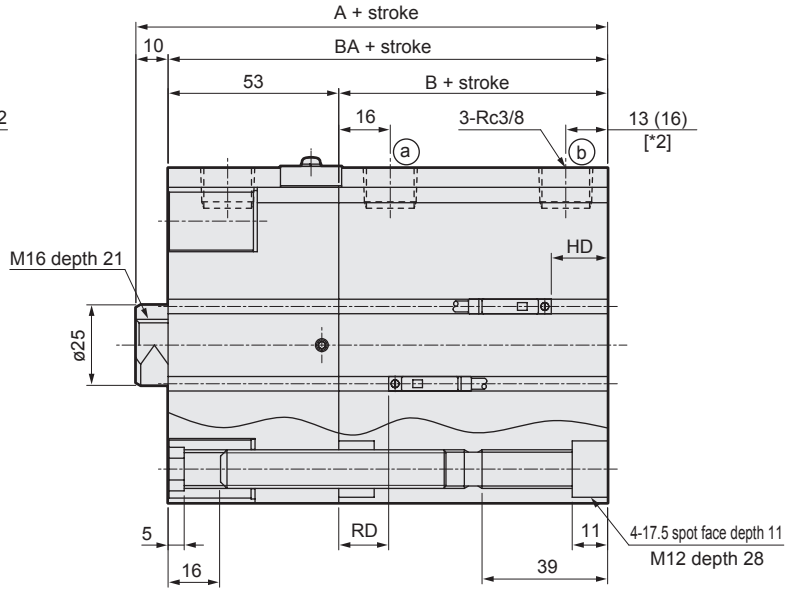

Code	Without switch			With switch			Reed T0H/T0V, T5H/T5V		Proximity T2H/T2V, T3H/T3V		Proximity T2WH/T2WV, T3WH/T3WV	
Bore size (mm)	A *1	B *1	BA *1	A *1	B *1	BA *1	HD *1	RD *1	HD *1	RD *1	HD *1	RD *1
ø80	116.5 (126.5)	53.5 (63.5)	106.5 (116.5)	126.5 (136.5)	63.5 (73.5)	116.5 (126.5)	22 (28)	20.5 (25.5)	22.5 (28)	20.5 (25.5)	22.5 (28)	20.5 (25.5)

*1 : To calculate A+ stroke or B+ stroke when using custom stroke,
apply the next longer standard stroke (instead of the custom stroke) to the stroke value.
(Example) If the custom stroke is 7 mm, apply the standard stroke of 10 mm.
*2 : When longer than 200 mm stroke, A, B, BA, HD and RD dimensions are indicated in ( ), and there is no mounting hole spot face.
*3 : HD and RD dimensions for 5 mm stroke differ from these dimensions according to the setting.
*4 : Dimensions in ( ) are for the radial lead wire.

Dimensions (high load ø100)

CAD

● USSD-K-100
● USSD-KL-100 (with switch/TOH/V, T5H/V, T2H/V, T3H/V, T2WH/V, T3WH/V)

B type

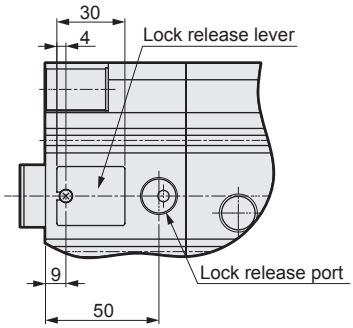

F type

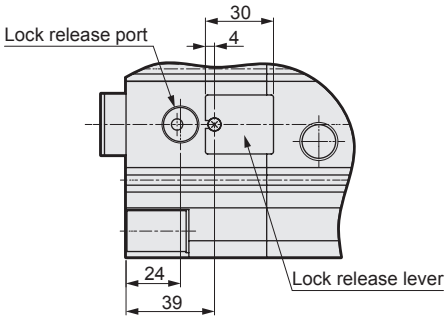

● Dimensions of rod end male thread part

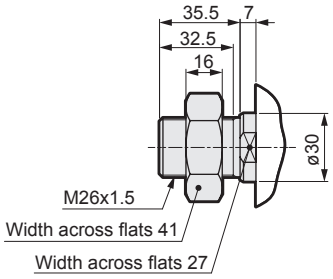

Note) The figure below shows F type.

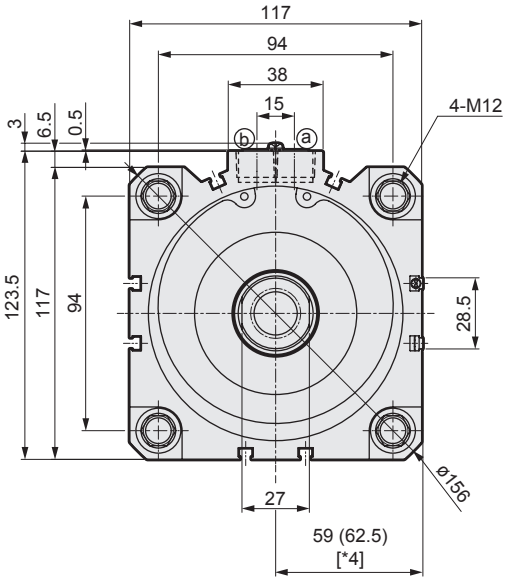

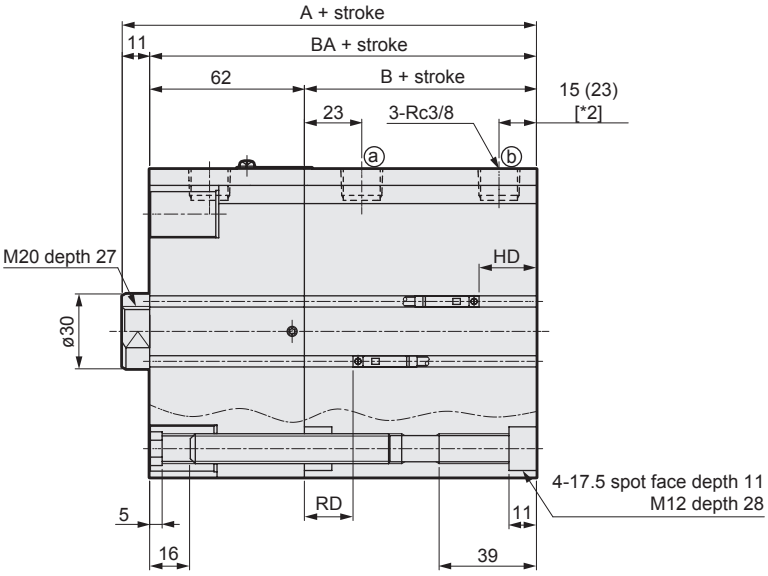

Code	Without switch			With switch			Reed TOH/TOV, T5H/T5V		Proximity T2H/T2V, T3H/T3V		Proximity T2WH/T2WV, T3WH/T3WV	
Bore size (mm)	A *1	B *1	BA *1	A *1	B *1	BA *1	HD *1	RD *1	HD *1	RD *1	HD *1	RD *1
ø100	136 (136)	63 (73)	125 (135)	146 (156)	73 (83)	135 (145)	28 (33.5)	24.5 (29.5)	28 (33.5)	24.5 (29.5)	28 (33.5)	24.5 (29.5)

*1 : To calculate A+ stroke or B+ stroke when using custom stroke,
apply the next longer standard stroke (instead of the custom stroke) to the stroke value.
(Example) If the custom stroke is 7 mm, apply the standard stroke of 10 mm.
*2 : When longer than 200 mm stroke, A, B, BA, HD and RD dimensions are indicated in ( ), and there is no mounting hole spot face.
*3 : HD and RD dimensions for 5 mm stroke differ from these dimensions according to the setting.
*4 : Dimensions in ( ) are for the radial lead wire.

LCM
LCR
LCG
LCW
LCX
STM
STG
STS/STL
STR2
UCA2
ULK*
JSK/M2
JSG
JSC3/JSC4
USSD
UFCD
USC
UB
JSB3
LMB
LML
HCM
HCA
LBC
CAC4
UCAC2
CAC-N
UCAC-N
RCS2
RCC2
PCC
SHC
MCP
GLC
MFC
BBS
RRC
GRC
RV3*
NHS
HRL
LN
Hand
Chuk
MecHnd/Chuk
ShkAbs
FJ
FK
SpdContr
Ending

Dimensions (ø20, ø25) CAD

● USSD-KL-20, 25 (2-color LED, off-delay, T8* with switch T2Y$^{H}/_{V}$, T3Y$^{H}/_{V}$, T2J$^{H}/_{V}$, T8$^{H}/_{V}$)

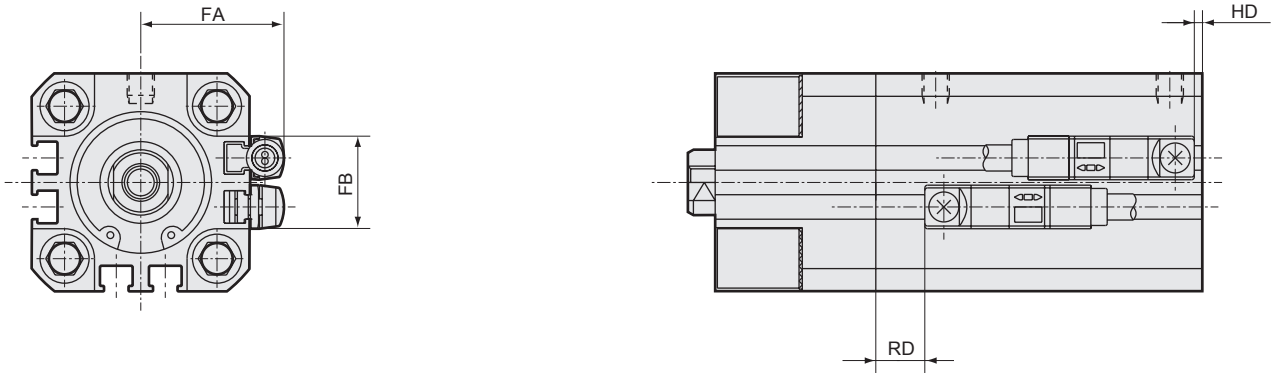

*1: When longer than ø20: 100 mm stroke or ø25: 150 mm stroke, HD and RD dimensions are indicated in ( ).

Code / Bore size (mm)	FA	FB	T2Y$^{H}/_{V}$,T3Y$^{H}/_{V}$,T2J$^{H}/_{V}$		T8$^{H}/_{V}$	
			RD *1	HD *1	RD *1	HD *1
ø20	24.3	16	7(12)	4.5(11)	2.5(7.5)	0(6.5)
ø25	26.3	17	10.5(15.5)	4(12.5)	6(11)	0(8)

● USSD-KL-20, 25 (with T1* switch, T1$^{H}/_{V}$)

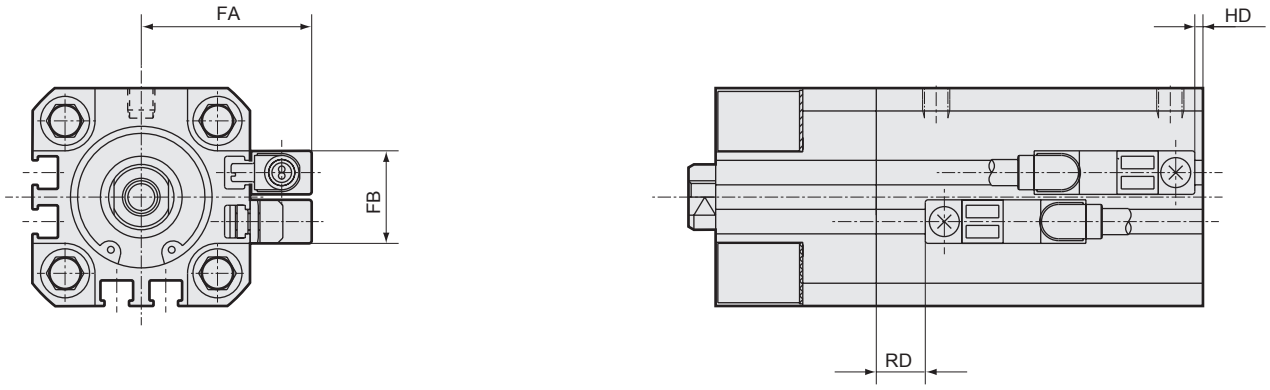

*1: When longer than ø20: 100 mm stroke or ø25: 150 mm stroke, HD and RD dimensions are indicated in ( ).

Code / Bore size (mm)	FA	FB	RD *1	HD *1
ø20	29.3	16	7(12)	4.5(11)
ø25	31.3	17	10.5(15.5)	4(12.5)

Dimensions (ø32 to ø100)

● USSD-KL-32 to 100 (2-color LED, off-delay, T8* with switch T2Y$^{H}/_{V}$, T3Y$^{H}/_{V}$, T2J$^{H}/_{V}$, T8$^{H}/_{V}$)

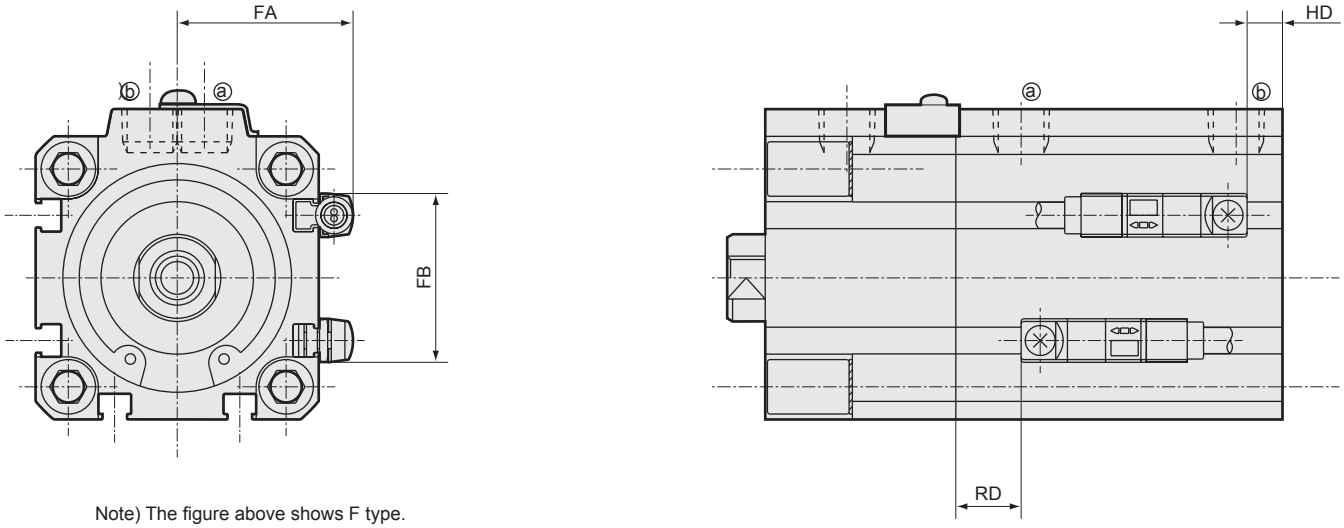

Note) The figure above shows F type.

*1: When longer than ø32 to 50: 150 mm stroke or ø63: 200 mm stroke, HD and RD dimensions are indicated in ( ).

Code / Bore size (mm)	FA	FB	T2Y$^{H}/_{V}$,T3Y$^{H}/_{V}$,T2J$^{H}/_{V}$		T8$^{H}/_{V}$	
			RD *1	HD *1	RD *1	HD *1
ø32	28.8	24	12.5(12.5)	8(14.5)	8(8)	3.5(10)
ø40	32.3	31	18(18)	8(17.5)	13.5(13.5)	3.5(13)
ø50	38.3	32	18.5(23.5)	8.5(17.5)	14(19)	4(13)
ø63	44.8	32	16.5(21.5)	16(21.5)	12(17)	11.5(17)
ø80	55.3	32	19(24)	20.5(26.5)	14.5(19.5)	16(22)
ø100	64.8	32	23(28)	26.5(32)	18.5(23.5)	22(27.5)

● USSD-KL-32 to 100 (with T1* switch/T2YD, T2YDT, T1$^{H}/_{V}$)

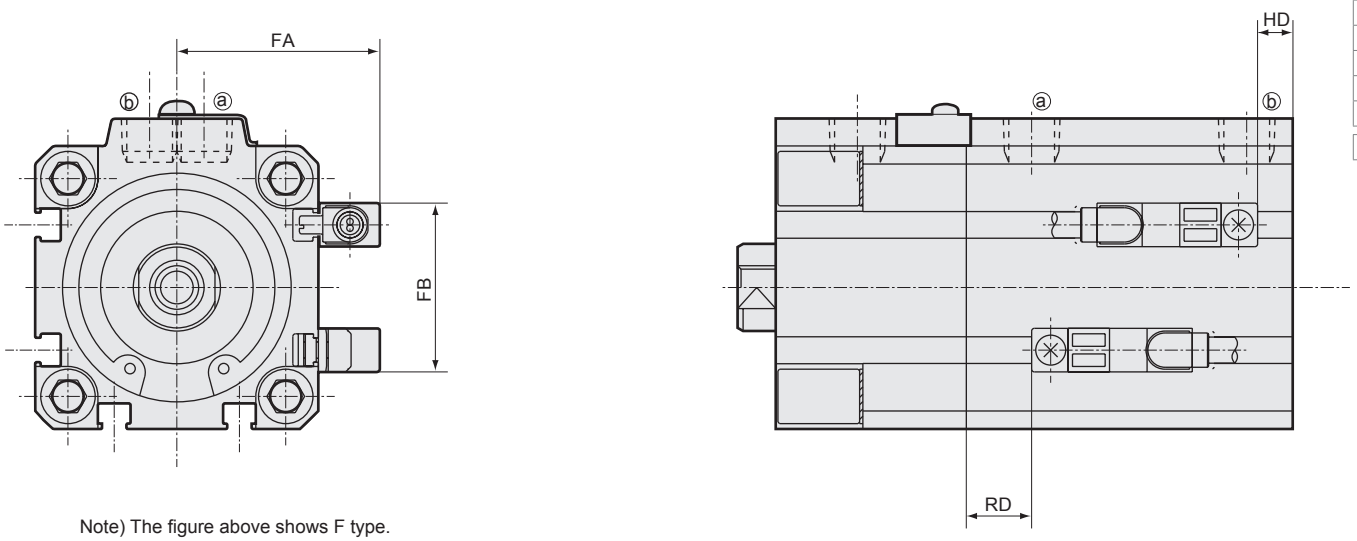

Note) The figure above shows F type.

*1: When longer than ø32 to 50: 150 mm stroke or ø63: 200 mm stroke, HD and RD dimensions are indicated in ( ).

Code / Bore size (mm)	FA	FB	RD *1	HD *1
ø32	33.8	24	12.5(12.5)	8(14.5)
ø40	37.3	31	18(18)	8(17.5)
ø50	43.3	32	18.5(23.5)	8.5(17.5)
ø63	49.8	32	16.5(21.5)	16(21.5)
ø80	60.3	32	19(24)	20.5(26.5)
ø100	69.8	32	23(28)	26.5(32)

LCM
LCR
LCG
LCW
LCX
STM
STG
STS/STL
STR2
UCA2
ULK*
JSK/M2
JSG
JSC3/JSC4
USSD
UFCD
USC
UB
JSB3
LMB
LML
HCM
HCA
LBC
CAC4
UCAC2
CAC-N
UCAC-N
RCS2
RCC2
PCC
SHC
MCP
GLC
MFC
BBS
RRC
GRC
RV3*
NHS
HRL
LN
Hand
Chuk
MecHnd/Chuk
ShkAbs
FJ
FK
SpdContr
Ending

Dimensions (Mounting bracket)

● Mounting bracket Axial foot (LB)

ø20/ø25/ø32

Material: Steel
Zinc chromate treatment

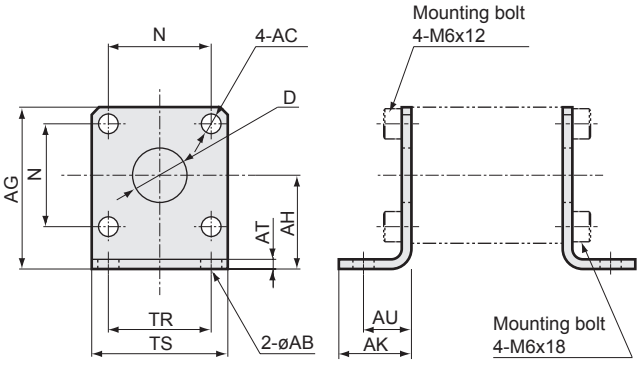

* 8 hexagon socket head cap screws are attached for installation.

Model No.	Bore size	AB	AC	AG	AH	AO	AT	AU	AK	D	N	TR	TS	Weight (g)
USSD-LB-20	ø20	7	6.5	42	24	8	3.2	15.9	24	12	25.5	24	36	140
USSD-LB-25	ø25	7	6.5	46	26	8	3.2	15.9	24	14	28	28	40	150
USSD-LB-32	ø32	7	6.5	53.5	31	8	3.2	15.9	24	18	34	34	45	180

ø40/ø50/ø63/ø80/ø100

Material: Steel
Zinc chromate treatment

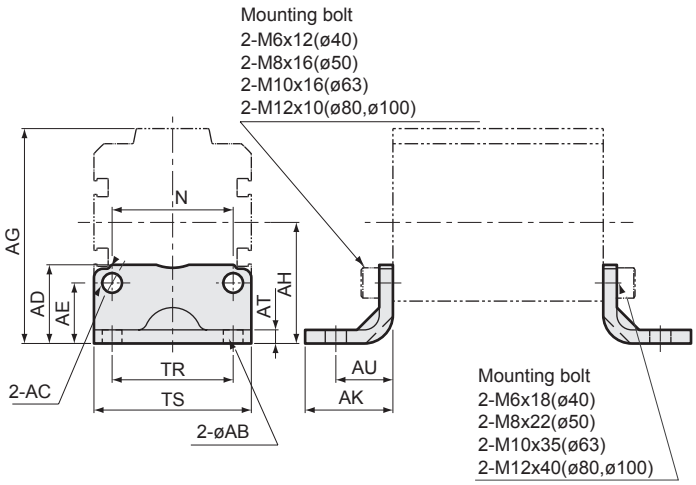

* 4 hexagon socket head cap screws are attached for installation.

Model No.	Bore size	AB	AC	AD	AE	AG	AH	AK	AT	AU	N	R	TR	TS	Weight (g)
USSD-LB-40	ø40	7	6.5	26	20	71	40	29	4.5	19	40	15	40	52	170
USSD-LB-50	ø50	9	9	23	15	79	40	34	4.5	22	50	25	46	64	270
USSD-LB-63	ø63	11	11	33	21	96.5	51	40	4.5	25	60	23	60	77	420
USSD-LB-80	ø80	13	13	42	23	116.5	61.5	50	6	35	77	27	77	98	890
USSD-LB-100	ø100	13	13	48	22	134	69	50	6	35	94	36	94	117	1050

Dimensions (Mounting bracket)

● Mounting bracket Clevis bracket (CB)

* Pin (including C ring) and snap ring are attached.
* When used for oscillating, high load cylinder is recommended.

ø20/ø25

Material: Cast iron
Painting

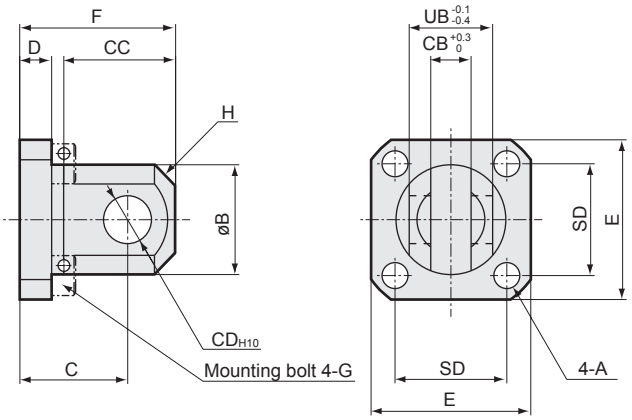

* 4 hexagon socket head cap screws are attached for installation.

Model No.	Bore size	A	B	C	CB	CC	CD	D	E	F	G	H	SD	UB	Wt (g)
SSD-CB-20	ø20	6.5	24	23	8.1	22	10	8	36	33	M6x22	C4	25.5	19	140
SSD-CB-25	ø25	6.5	27.5	27	10.1	28	12	8	40	39	M6x22	C5	28	21	180

ø32/ø40/ø50/ø63/ø80/ø100

Material: Cast iron
Painting

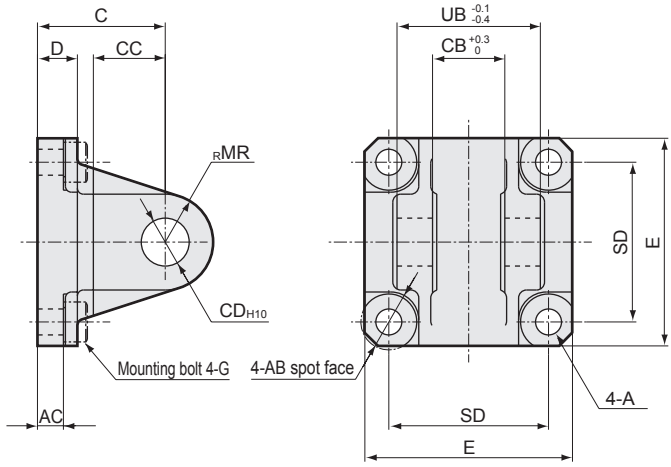

* 4 hexagon socket head cap screws are attached for installation.

Model No.	Bore size	A	AB	AC	C	CB	CC	CD	D	E	G	MR	SD	UB	Weight (g)
SSD-CB-32	ø32	6.5	13	9.5	30	10.1	16	12	10	45	M6x25	12	34	21	230
SSD-CB-40	ø40	6.5	14	6.5	32	18.1	18	12	10	52	M6x20	12	40	36	290
SSD-CB-50	ø50	9	16	6.5	32	18.1	18	12	10	64	M8x25	12	50	36	390
SSD-CB-63	ø63	11	20	7.5	37	20.1	24	14	10	77	M10x40	16	60	40	630
SSD-CB-80	ø80	14	20	10.5	52	28.1	30	20	14	98	M12x40	20	77	56	1530
SSD-CB-100	ø100	14	20	10.5	52	28.1	30	20	16	118	M12x40	20	94	56	1900

● Clevis bracket (CB) attached pin dimensions table

Material: Steel
Zinc chromate treatment

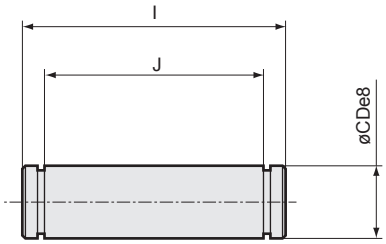

Model No.	Bore size	I	J	CD	Weight (g)	Applicable snap ring
SSD-P-20	ø20	25	20	10	17	E type 9
SSD-P-25	ø25	27	22	12	25	E type 9
SSD-P-32	ø32	27	22	12	25	E type 9
SSD-P-40	ø40	43.5	36.2	12	39	C type for shaft 12
SSD-P-50	ø50	43.5	36.2	12	39	C type for shaft 12
SSD-P-63	ø63	47.5	40.2	14	58	C type for shaft 12
SSD-P-80	ø80	64	56.2	20	156	C type for shaft 20
SSD-P-100	ø100	64	56.2	20	156	C type for shaft 20

Pneumatic components

Safety Precautions

Be sure to read this section before use.
Refer to Intro Page 73 for general information of the cylinder, and to Intro Page 80 for general information of the cylinder switch.

Product-specific cautions: Compact cylinder with position locking USSD Series

Design/selection

WARNING

- Cylinder with position locking mechanism (for holding cylinder stationary).
  Emergency stops (while the cylinder is in operation) can significantly decrease the service life.

- If back pressure is applied to the locking mechanism, the lock may be released. Use a discrete valve, or use an individual exhaust manifold.

- Do not apply torque to the rod when locked because the holding force may decrease, creating a dangerous condition. Also, use this product in mechanisms in which the rod does not rotate.

- To release the lock, when using forward locking, supply pressure to port B, and when using backward locking, supply pressure to port A. Check that load is not applied to the locking mechanism. When both ports A and B are exhausted and the piston is locked, if pressure is supplied to port A for forward locking or to port B for backward locking, the lock may not be released or, even if released, the piston rod may pop out, creating a hazard.

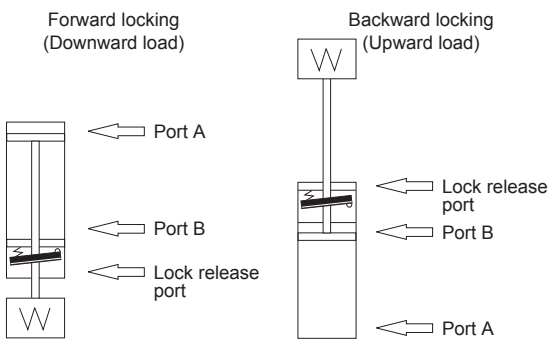

- Do not use multiple synchronized cylinders with position locking. If the synchronization deviates, an excess moment load or load concentration is applied to the cylinder locked first, risking lock release defects, shortened service life, or damage.

CAUTION

- Basic circuit diagram
  Arrange the air piping of this cylinder as shown in the figure below. Arranging the pipes differently from the figure below, such as piping the position locking part as a single unit, may cause problems such as delayed response.

  1. Be sure to branch the piping of this cylinder after the valve into the position locking part (lock release port as main piping) and cylinder part (cylinder port as branch piping) as shown in the figure below.

  2. Be sure to design the piping so that the lock is released before the cylinder starts operating. Failure to do so may prevent unlocking or cause the piston rod to jump out.

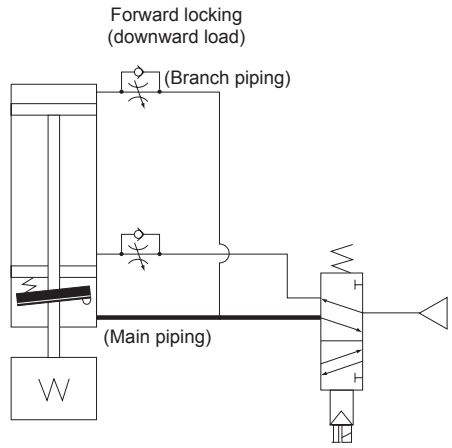

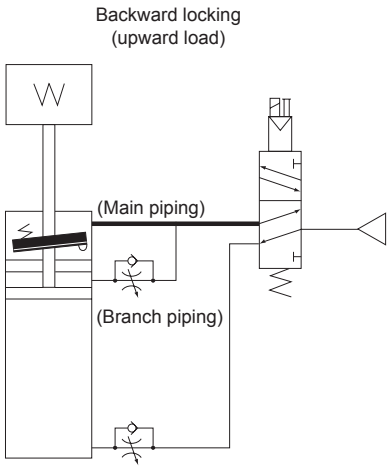

Using the emergency stop with the air piping as shown in the figure above will move the cylinder backward in a forward locking and forward in a backward locking, returning it to the original position. (When there is no residual pressure, the cylinder stops at that point.)

Mounting, installation and adjustment

⚠ WARNING

- Do not apply grease to the piston rod because the holding force may decrease, creating a dangerous condition.
- Do not use the product so as to apply rotation torque to the piston rod, as the holding force may decrease.

⚠ CAUTION

- Main piping in the basic circuit diagram on the previous page should be thicker and shorter than branch piping.
- The cylinder switch could malfunction if there is a magnetic substance such as a metal plate installed adjacently. Confirm that a distance of at least 10 mm is allocated from the surface of the cylinders. (Same for all bore sizes)

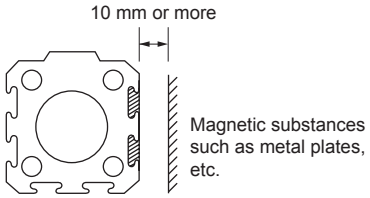

- The cylinder switch may malfunction if cylinders are installed adjacently. Check that the following distances are provided between cylinders. (Same for all bore sizes)

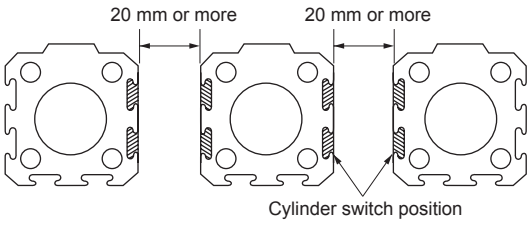

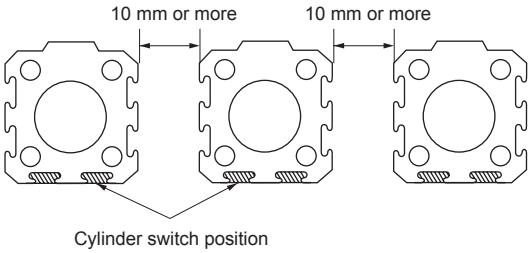

- Be sure to provide a guide separately when using multiple synchronized cylinders.
  Using only the cylinder may impair synchronicity and cause the rod to twist, leading to malfunctions.
- As compatible piping fittings are limited, refer to the table below to select the fitting.

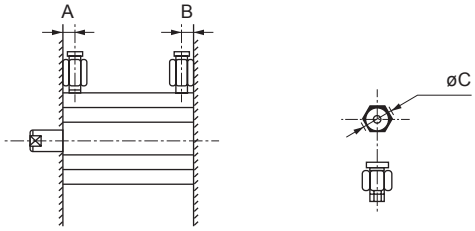

Item / Bore size (mm)	Port size	Port position A	Port position B	Applicable fittings	Fitting O.D. øC	Inapplicable fittings
ø20	M5x0.8	10	5.5	SC3W-M5-4 SC3W-M5-6 GWS4-M5-S GWS4-M5 GWL4-M5 GWL6-M5	ø11 or less	GWS6-M5
ø25		12	6			
ø32	Rc1/8	12	8	SC3W-6-4/6/8 GWS4-6 GWS6-6 GWS8-6 GWL4-6 GWL6-6	ø15 or less	GWS10-6 GWL8-6 GWL10-6
ø40		15	8.5			
ø50	Rc1/4	15	10.5	SC3W-8-6/8/10 GWS4-8 GWS6-8 GWS10-8 GWL4 to 12-8	ø21 or less	GWS12-8
ø63		15.5	11			
ø80	Rc3/8	16	13	SC3W-10-6/8/10 GWS6-10 GWS8-10 GWS10-10 GWL6 to 12-10	ø21 or less	——
ø100		23	15			

LCM
LCR
LCG
LCW
LCX
STM
STG
STS/STL
STR2
UCA2
ULK*
JSK/M2
JSG
JSC3/JSC4
USSD
UFCD
USC
UB
JSB3
LMB
LML
HCM
HCA
LBC
CAC4
UCAC2
CAC-N
UCAC-N
RCS2
RCC2
PCC
SHC
MCP
GLC
MFC
BBS
RRC
GRC
RV3*
NHS
HRL
LN
Hand
Chuk
MecHnd/Chuk
ShkAbs
FJ
FK
SpdContr
Ending

Use/maintenance

⚠ WARNING

- The required grease is applied to brakes. Avoid applying extra grease and do not wipe grease off.
- Do not disassemble the unit, as doing so may be dangerous.
- Always use the product with the dust cover on, except for when performing manual release, in order to prevent failure or malfunction.
- If no air pressure is supplied in vertical mounting, etc., holding force may not be sufficient when the lock is manually released. This may cause the rod to move (drop) with the load's weight.
  For safety, take the following measures before manually releasing the lock:
  - Move the load to the bottom end.
  - Provide a stopper to the load
  - Apply air pressure to the cylinder to balance the load.

⚠ CAUTION

- When locking the first time after leaving the lock released for a long time, a delayed response may occur in the lock.
  Do not leave the lock pressurized, and operate the lock at each cylinder operation.
  (Use the basic circuit diagram shown on page 882)
- Keeping the cylinder with pressure applied to the lock mechanism may cause the lock to release.
  Do not use 3-position closed center and 3-position P/A/B connection solenoid valves.
- Due to the structure, the piston rod drops by about 1 mm when the lock is applied.

- How to unlock manually

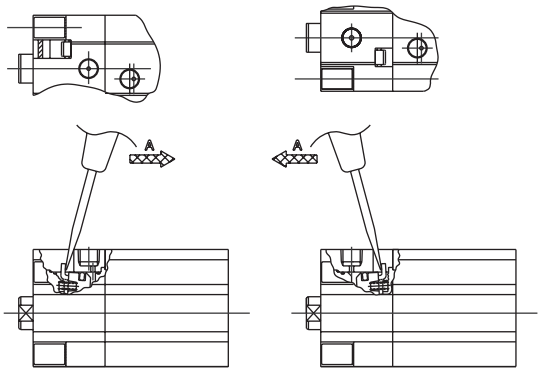

Backward locking (lock direction →)

Forward locking (lock direction ←)

- Remove the cover, insert a flathead screwdriver and lightly push it down in the direction of arrow A to lift the release lever, unlock and free the piston rod.

- The cylinder body may be damaged or may malfunction if a unit with excessive inertia, etc., is actuated. Use within the allowable absorbed energy range.

UFCD

Free position locking flat cylinder

With brake/position locking

ø25/ø32/ø40/ø50/ø63

Overview

Cylinder equipped with position locking mechanism capable of stopping at any position of the stroke length for FCD Series flat cylinders.

CONTENTS

Product introduction	886
Series variation	887
● Double acting/single rod (UFCD-KL)	888
⚠ Safety precautions	898

Free-position flat cylinder FCD Series with position locking!

Saves space and ensures the safety of workpieces or the like during power failures or accidents.

UFCD Series

With free position locking mechanism

- The locking position can be at any point as long as the piston rod remains still
- The direction of the lock can either be forward or backward
- It moves freely in the reverse lock direction, and is therefore easy to remove even with workpiece clamped.

Space saving/simple design

- A flat type that can be installed in a tight space or arranged side-by-side
- Even with its position locking mechanism, it has a simple design that can work with any device.

Rotation-stop is not required

- Due to the oval piston structure, the cylinder body has a rotation-stop function. Therefore, there is no need to provide a separate rotation-stop mechanism.

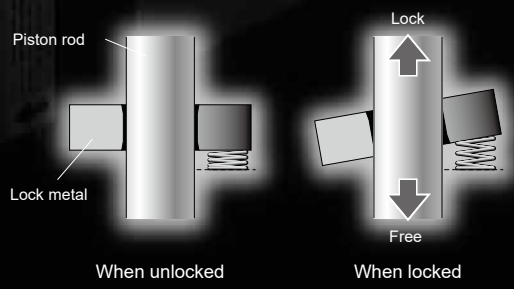

Series variation

Free position locking flat cylinder UFCD Series

●: Standard ◎: Option

Variation	Model No.	Bore size (mm)	Standard stroke length (mm)								Min. stroke length	Custom stroke length	Max. stroke length	Option	Switch	Page
			5	10	15	20	25	30	40	50	(mm)	(/mm)	(mm)	Rod end male thread N		
Double acting/ single rod	UFCD-KL	ø25 equivalent/ ø32 equivalent/ ø40 equivalent/ ø50 equivalent/ ø63 equivalent	●	●	●	●	●	●	●	●	1	1	150	◎	◎	888

Free position locking flat cylinder double acting/single rod

UFCD Series

● Bore size: ø25/ø32/ø40/ø50/ø63

RoHS CAD

Specifications

Item	UFCD-KL				
Bore size mm	ø25 or equiv.	ø32 or equiv.	ø40 or equiv.	ø50 or equiv.	ø63 or equiv.
Actuation	Double acting				
Working fluid	Compressed air				
Max. working pressure MPa	0.7 (≈100 psi, 7 bar)				
Min. working pressure MPa	0.25 (≈36 psi, 2.5 bar)				
Proof pressure MPa	1.05 (≈150 psi, 10.5 bar)				
Ambient temperature °C	-10 (14°F) to 60 (140°F) (no freezing)				
Port size	M5		Rc1/8		Rc1/4
Stroke tolerance mm	$^{+1.5}_{0}$ (to 50) $^{+2.0}_{0}$ (to 150)				
Working piston speed mm/s	50 to 500				
Cushion	Rubber cushion				
Lubrication	Not required (turbine oil class 1 ISO VG32 if necessary for lubrication)				
Holding force N	345	543	904	1350	2220
Allowable absorbed energy J	0.34	0.54	0.67	1.02	1.56

Rotation-stop precision/Allowable torque

Item	ø25 or equiv.	ø32 or equiv.	ø40 or equiv.	ø50 or equiv.	ø63 or equiv.
Non-rotating accuracy *2	±1°	±0.8°	±0.5°	±0.5°	±0.5°
Allowable torque N·m	1	1.6	2.5	3.9	5.9

*1: Avoid applying rotation torque with impact, or with violent changes in torque load direction.
*2: "Non-rotating accuracy" is the value when a torque load equivalent to 10% of "allowable torque" is applied to the end of the piston rod.

Stroke length

Model No.	Bore size (mm)	Standard stroke length (mm)	Max. stroke length (mm)	Min. stroke length (mm)
UFCD-KL	ø25, ø32 ø40, ø50 ø63 or equiv.	5/10/15/20/25 30/40/50	150	1

*1: The custom stroke length is available in 1 mm increments.
*2: The min. stroke length varies depending on switch mounting method. Refer to the following table.

Min. stroke length with switch

1		2	
Rod side installation	Head side installation	Different surface mounting	Same surface mounting
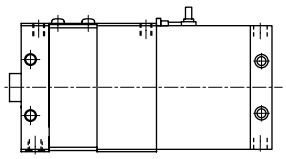	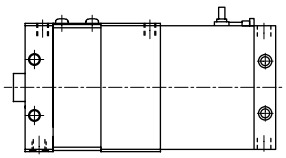	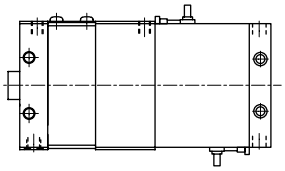	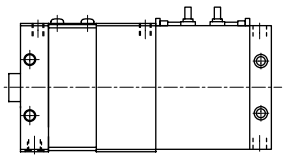
10 mm		15 mm	35 mm(ø25/32/40/50) 30 mm(ø63)

LCM
LCR
LCG
LCW
LCX
STM
STG
STS/STL
STR2
UCA2
ULK*
JSK/M2
JSG
JSC3/JSC4
USSD
UFCD
USC
UB
JSB3
LMB
LML
HCM
HCA
LBC
CAC4
UCAC2
CAC-N
UCAC-N
RCS2
RCC2
PCC
SHC
MCP
GLC
MFC
BBS
RRC
GRC
RV3*
NHS
HRL
LN
Hand
Chuk
MecHnd/Chuk
ShkAbs
FJ
FK
SpdContr
Ending

Switch specifications

● Proximity switch

Item	Proximity 2-wire		Proximity 3-wire		
	M2V	M2WV (2-color display)	M3V	M3PV (Made to order)	M3WV (2-color display)
Applications	Dedicated for programmable controller		Programmable controller, relay, IC circuit, small solenoid valve		
Output method	-	NPN output	NPN output	PNP output	NPN output
Power supply voltage	-		4.5 to 28 VDC		10 to 28 VDC
Load voltage	10 to 30 VDC		30 VDC or less		
Load current	5 to 30 mA		100 mA or less	100 mA or less	100 mA or less
Indicator lamp	LED (Lit when ON)	Red/green LED (Lit when ON)	LED (Lit when ON)	Yellow LED (Lit when ON)	Red/green LED (Lit when ON)
Leakage current	1 mA or less		10 μA or less	0.05 mA or less	10 μA or less
Weight g	1 m:22 3 m:57 5 m:93				

● Reed switch

Item	Reed 2-wire			
	MOV		M5V	
Applications	Programmable controller, relay		For programmable controller, relay, IC circuit (without indicator lamp), serial connection	
Power supply voltage	-		-	
Load voltage	12/24 VDC	110 VAC	5/12/24 VDC	110 VAC or less
Load current	5 to 50 mA	7 to 20 mA	50 mA or less	20 mA or less
Indicator lamp	LED (Lit when ON)		Without indicator lamp	
Leakage current	0 mA			
Weight g	1 m:22 3 m:57 5 m:93			

*1: Refer to Ending Page 1 for other switch specifications.
*2: Dimensions depend on switch model No. Refer to Ending Page 13 for details.

Cylinder weight

(Unit: g)

Bore size (mm)	Product weight when stroke length (S) = 0 mm	Additional weight per S = 10 mm	Switch weight	Mounting bracket weight
ø25 or equiv.	454	26	Refer to the weight in the switch specifications.	2
ø32 or equiv.	613	37		
ø40 or equiv.	1046	46		
ø50 or equiv.	1730	71		
ø63 or equiv.	3088	90		

(Example) Product weight of UFCD-KL-32-20
- ● Product weight when S = 0 mm ..... 613 g
- ● Additional weight when S = 20 mm ..... $37\ g \times \frac{20}{10} = 74\ g$
- ● Product weight ..... 613 g+74 g = 687 g

Theoretical thrust table

(Unit: N)

Bore size (mm)	Operating direction	Working pressure MPa				
		0.3	0.4	0.5	0.6	0.7
ø25	Push	1.48×10^2	1.97×10^2	2.46×10^2	2.96×10^2	3.45×10^2
	Pull	1.14×10^2	1.52×10^2	1.90×10^2	2.28×10^2	2.66×10^2
ø32	Push	2.33×10^2	3.10×10^2	3.88×10^2	4.66×10^2	5.43×10^2
	Pull	1.73×10^2	2.30×10^2	2.88×10^2	3.45×10^2	4.03×10^2
ø40	Push	3.87×10^2	5.16×10^2	6.45×10^2	7.75×10^2	9.04×10^2
	Pull	3.27×10^2	4.36×10^2	5.45×10^2	6.54×10^2	7.63×10^2
ø50	Push	5.80×10^2	7.73×10^2	9.66×10^2	1.16×10^3	1.35×10^3
	Pull	4.85×10^2	6.47×10^2	8.09×10^2	9.71×10^2	1.13×10^3
ø63	Push	9.53×10^2	1.27×10^3	1.59×10^3	1.91×10^3	2.22×10^3
	Pull	8.59×10^2	1.15×10^3	1.43×10^3	1.72×10^3	2.00×10^3

LCM
LCR
LCG
LCW
LCX
STM
STG
STS/STL
STR2
UCA2
ULK*
JSK/M2
JSG
JSC3/JSC4
USSD
UFCD
USC
UB
JSB3
LMB
LML
HCM
HCA
LBC
CAC4
UCAC2
CAC-N
UCAC-N
RCS2
RCC2
PCC
SHC
MCP
GLC
MFC
BBS
RRC
GRC
RV3*
NHS
HRL
LN
Hand
Chuk
MecHnd/Chuk
ShkAbs
FJ
FK
SpdContr
Ending

How to order

● With switch (built-in magnet for switch)

UFCD-KL - 25 - ◯ - 10 - F - M2V - R - N

Ⓐ Model No.
Ⓑ Bore size
Ⓒ Port thread
Ⓓ Stroke length
Ⓔ Lock direction
Ⓕ Switch model No.
* indicates the lead wire length.
Ⓖ Switch quantity
Ⓗ Option

Code	Description
Ⓐ Model No.	
UFCD-KL	Double acting/cushioned/with switch

Ⓑ Bore size (mm)	
25	ø25
32	ø32
40	ø40
50	ø50
63	ø63

Ⓒ Port thread	
Blank	Rc thread
NN	NPT thread (ø40 and over) (made-to-order product)
GN	G thread (ø40 and over) (made-to-order product)

Ⓓ Stroke length (mm)		
Bore size	**Stroke length *1**	**Custom stroke length**
ø25 to ø63	**1 to 150**	In 1 mm increments

Ⓔ Lock direction	
F	Forward locking
B	Backward locking

Ⓕ Switch model No.

Radial lead wire	Contact	Voltage AC	Voltage DC	Display	Lead wire
M2V*	Proximity		●	1-color display	2-wire
M2WV*			●	2-color display	
M3V*			●	1-color display	3-wire
M3WV*			●	2-color display	
M3PV*			●	1-color display (made-to-order)	
M0V*	Reed	●	●	1-color display	2-wire
M5V*		●	●	Without indicator lamp	

*** Lead wire length**	
Blank	1 m (standard)
3	3 m (option)
5	5 m (option)

Ⓖ Switch quantity	
R	1 on rod side
H	1 on head side
D	2
T	3

Ⓗ Option	
Blank	Rod end female thread
N	Rod end male thread

⚠ Precautions for model No. selection

*1: Refer to page 888 for the min. stroke length with switch.

[Example of model No.]

UFCD-KL-25-10-F-M2V-R-N

Model: Free position locking flat cylinder

Ⓐ Model No. : Double acting/cushioned/with switch
Ⓑ Bore size : ø25 mm
Ⓒ Port thread : Rc thread
Ⓓ Stroke length : 10 mm
Ⓔ Lock direction : Forward locking
Ⓕ Switch model No. : Proximity switch M2V, lead wire 1 m
Ⓖ Switch quantity : 1 on rod side
Ⓗ Option : Rod end male thread

How to order switch

● Switch body + mounting bracket set

FCS - M2V

Switch model No.
(Item Ⓕ on page 890)

● Switch body only

SW - M2V

Switch model No.
(Item Ⓕ on page 890)

● Mounting bracket set

FCS - M

Mounting bracket

LCM
LCR
LCG
LCW
LCX
STM
STG
STS/STL
STR2
UCA2
ULK*
JSK/M2
JSG
JSC3/JSC4
USSD
UFCD
USC
UB
JSB3
LMB
LML
HCM
HCA
LBC
CAC4
UCAC2
CAC-N
UCAC-N
RCS2
RCC2
PCC
SHC
MCP
GLC
MFC
BBS
RRC
GRC
RV3*
NHS
HRL
LN
Hand
Chuk
MecHnd/Chuk
ShkAbs
FJ
FK
SpdContr
Ending

Internal structure and parts list (Refer to the internal structure of FCD-KL regarding the cylinder)

● UFCD-KL-25, 32

• Lock direction: F (forward locking)

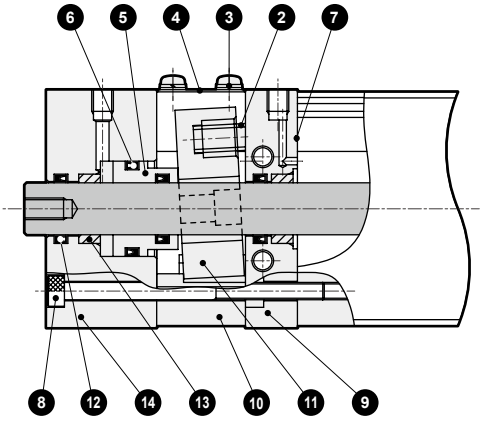

• Lock direction: B (backward locking)

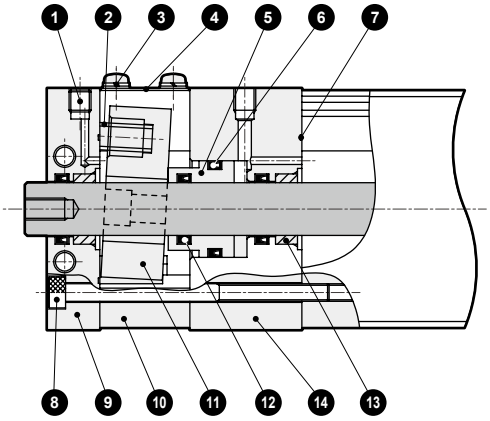

Cannot be disassembled

No.	Part name	Material	Remarks	No.	Part name	Material	Remarks
1	Hexagon socket set screw	Steel	Black finish	8	Hexagon socket head cap screw	Steel	Black finish
2	Spring	Steel	Black finish	9	Rod cover	Aluminum alloy	Black alumite
3	Cross-recessed pan head machine screw	Steel	Chromate	10	Lock tube	Aluminum alloy	Alumite
4	Dust cover	Stainless steel		11	Lock plate	Special steel	Chromate
5	Release piston	Copper alloy casting		12	Rod packing	Nitrile rubber	
6	Piston packing	Nitrile rubber		13	Metal bush	Oil-less metal	
7	Gasket	Nitrile rubber		14	Lock body	Aluminum alloy	Black alumite

Note: Do not disassemble, as the holding force may be affected, which is dangerous.

● UFCD-KL-40 to 63

• Lock direction: F (forward locking)

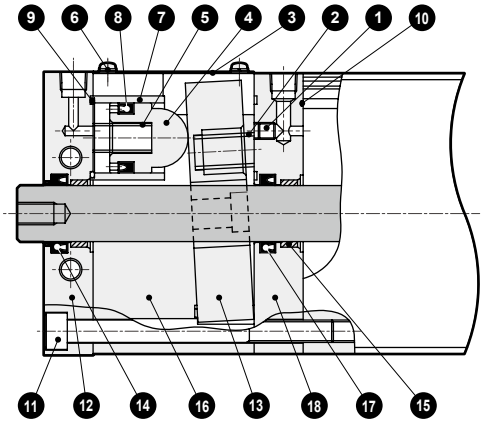

• Lock direction: B (backward locking)

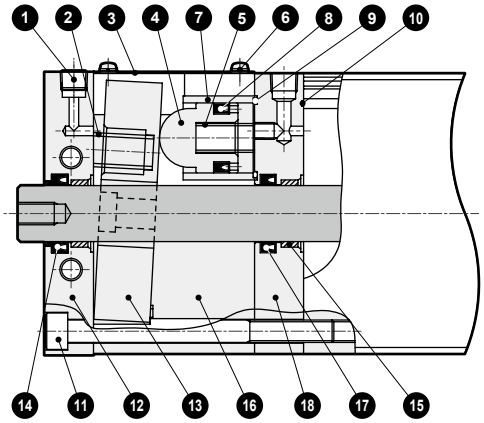

Cannot be disassembled

No.	Part name	Material	Remarks	No.	Part name	Material	Remarks
1	F type: Hexagon socket set screw	Steel		10	Gasket	Nitrile rubber	
	B type: Hex socket head cap taper thread plug	Steel		11	Hexagon socket head cap screw	Steel	Black finish
2	Brake spring	Steel	Black finish	12	Rod cover	Aluminum alloy	Black alumite
3	Dust cover	Stainless steel		13	Lock plate	Special steel	Chromate
4	Piston	Copper alloy casting		14	Rod packing	Nitrile rubber	
5	Piston spring	Steel		15	Metal bush	Oil-less metal	
6	Cross-recessed pan head machine screw	Steel	Chromate	16	Lock tube	Aluminum alloy	Alumite
7	Release piston tube	Stainless steel		17	Rod packing	Nitrile rubber	
8	Piston packing	Nitrile rubber		18	Lock body	Aluminum alloy	Black alumite
9	O-ring	Nitrile rubber					

Note: Do not disassemble, as the holding force may be affected, which is dangerous.

Dimensions (ø25)

● UFCD-KL-25-F (forward locking)

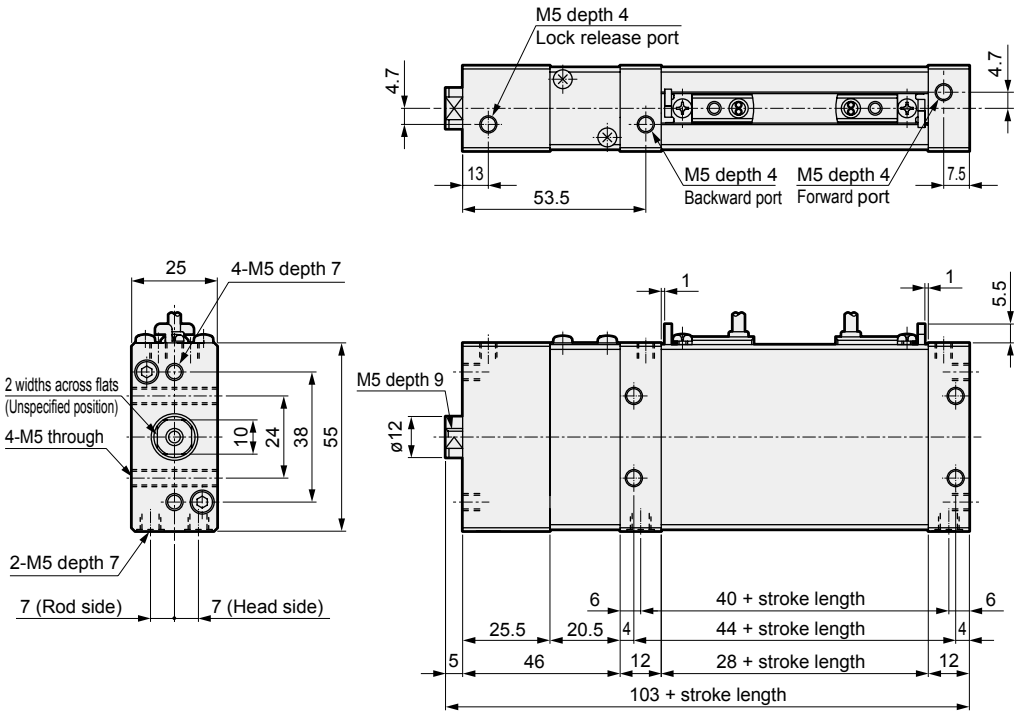

● Rod end male thread
(Option code: N)

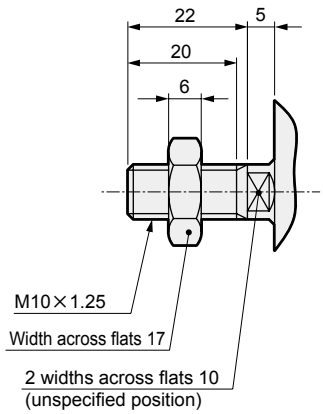

*1: For same-surface installation with 2 switches, the stroke length of 35 mm and over is required. For the stroke length of that value or less, set on both sides.

● UFCD-KL-25-B (backward locking)

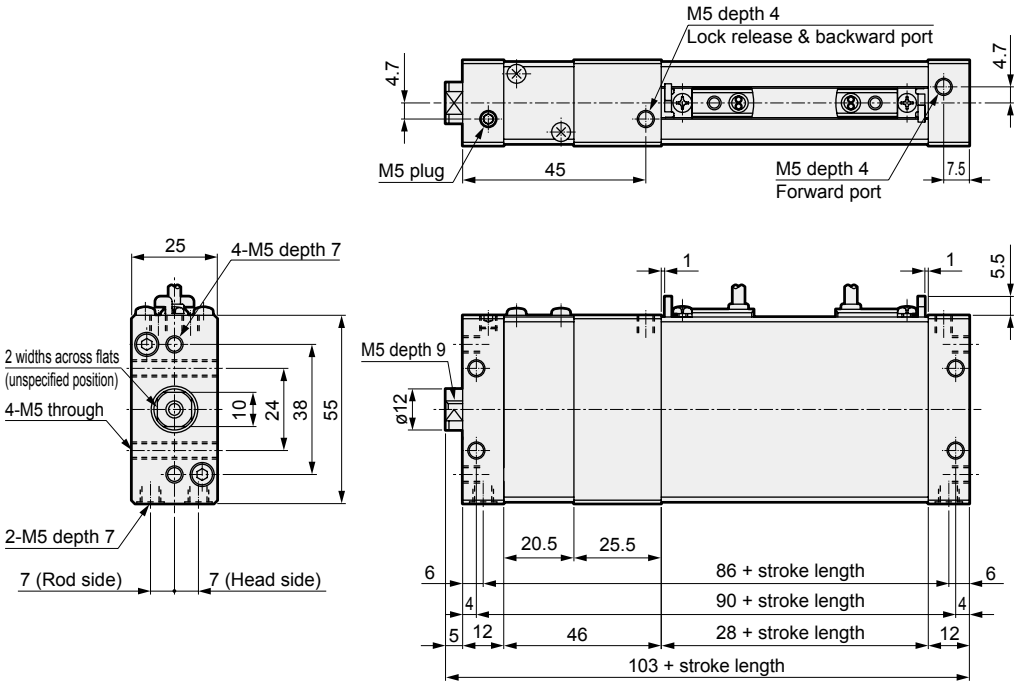

*1: For same-surface installation with 2 switches, the stroke length of 35 mm and over is required. For the stroke length of that value or less, set on both sides.

LCM
LCR
LCG
LCW
LCX
STM
STG
STS/STL
STR2
UCA2
ULK*
JSK/M2
JSG
JSC3/JSC4
USSD
UFCD
USC
UB
JSB3
LMB
LML
HCM
HCA
LBC
CAC4
UCAC2
CAC-N
UCAC-N
RCS2
RCC2
PCC
SHC
MCP
GLC
MFC
BBS
RRC
GRC
RV3*
NHS
HRL
LN
Hand
Chuk
MecHnd/Chuk
ShkAbs
FJ
FK
SpdContr
Ending

Dimensions (ø32)

● UFCD-KL-32-F (forward locking)

● Rod end male thread (Option code: N)

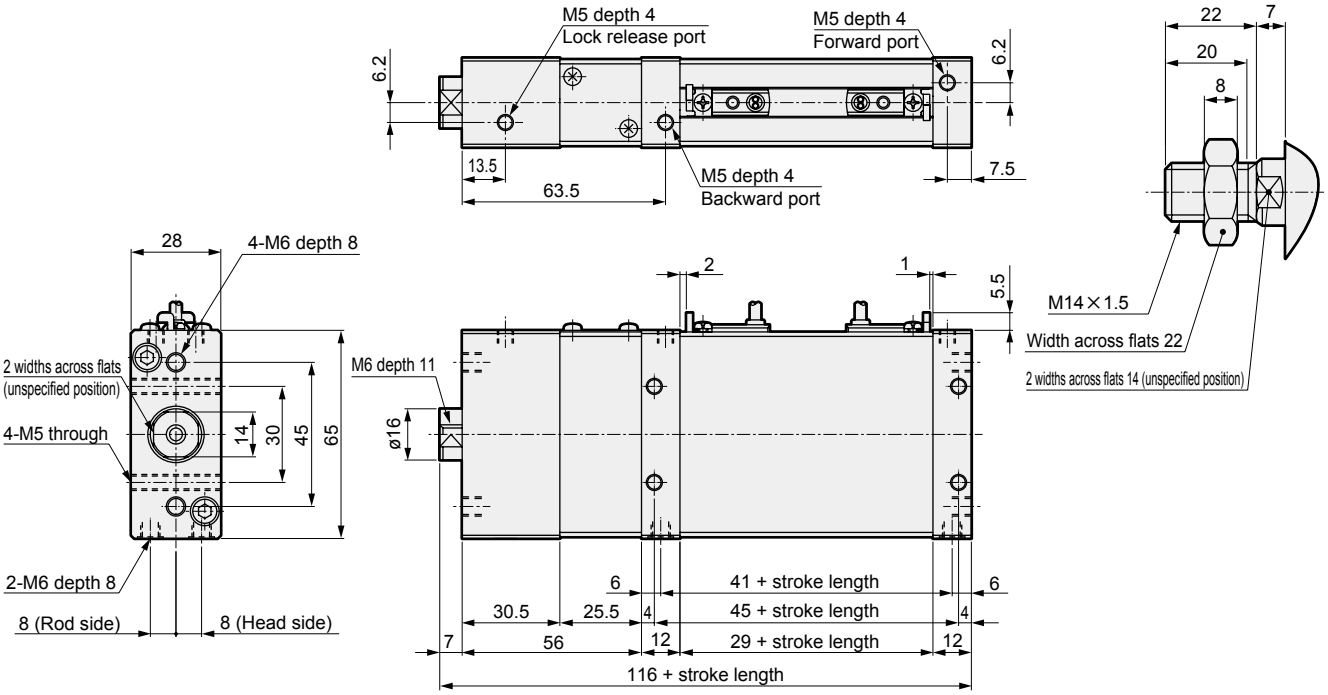

*1: For same-surface installation with 2 switches, the stroke length of 35 mm and over is required. For the stroke length of that value or less, set on both sides.

● UFCD-KL-32-B (backward locking)

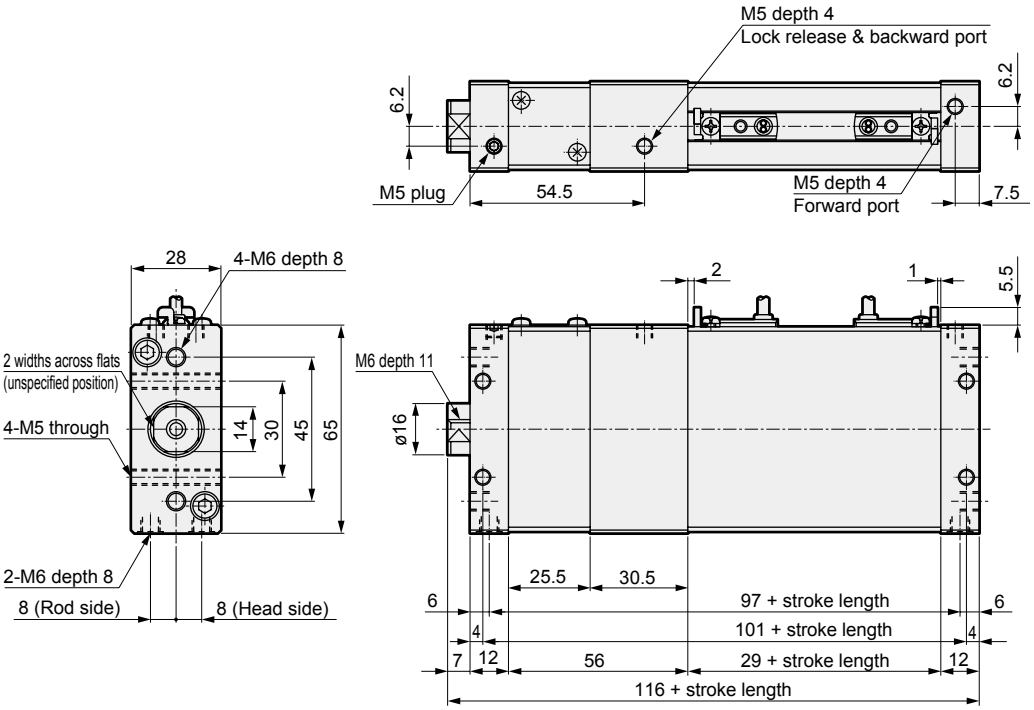

*1: For same-surface installation with 2 switches, the stroke length of 35 mm and over is required. For the stroke length of that value or less, set on both sides.

Dimensions (ø40)

● UFCD-KL-40-F/B (forward/backward locking)

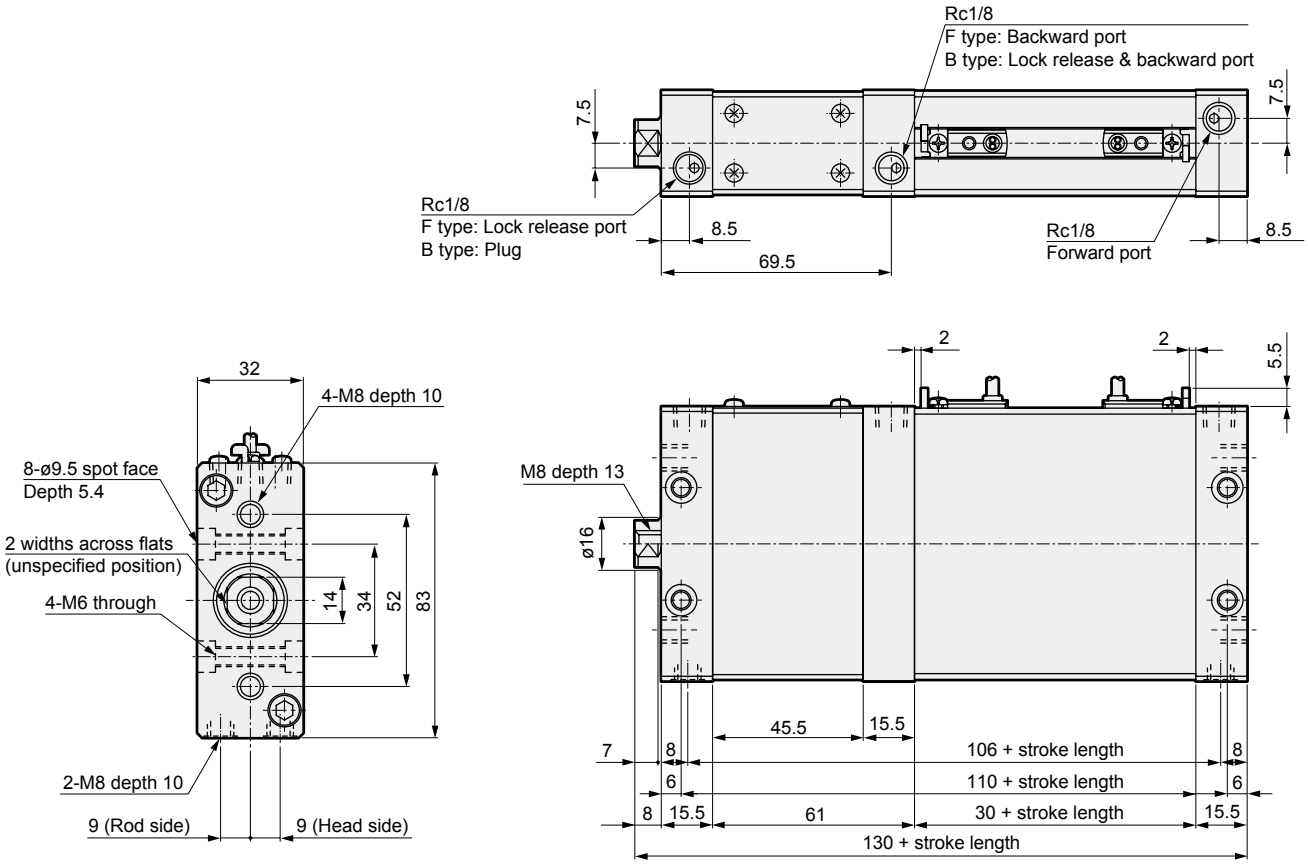

● Rod end male thread
(Option code: N)

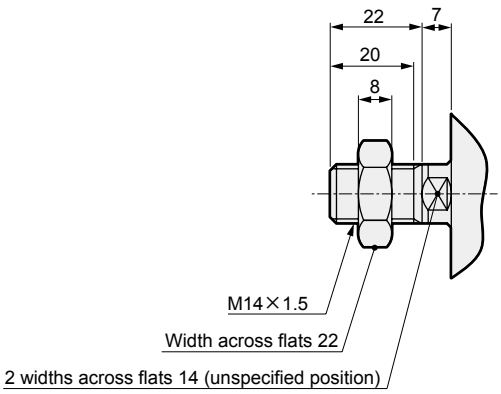

*1: For same-surface installation with 2 switches, the stroke length of 35 mm and over is required. For the stroke length of that value or less, set on both sides.

LCM
LCR
LCG
LCW
LCX
STM
STG
STS/STL
STR2
UCA2
ULK*
JSK/M2
JSG
JSC3/JSC4
USSD
UFCD
USC
UB
JSB3
LMB
LML
HCM
HCA
LBC
CAC4
UCAC2
CAC-N
UCAC-N
RCS2
RCC2
PCC
SHC
MCP
GLC
MFC
BBS
RRC
GRC
RV3*
NHS
HRL
LN
Hand
Chuk
MecHnd/Chuk
ShkAbs
FJ
FK
SpdContr
Ending

Dimensions (ø50)

● UFCD-KL-50-F/B (forward/backward locking)

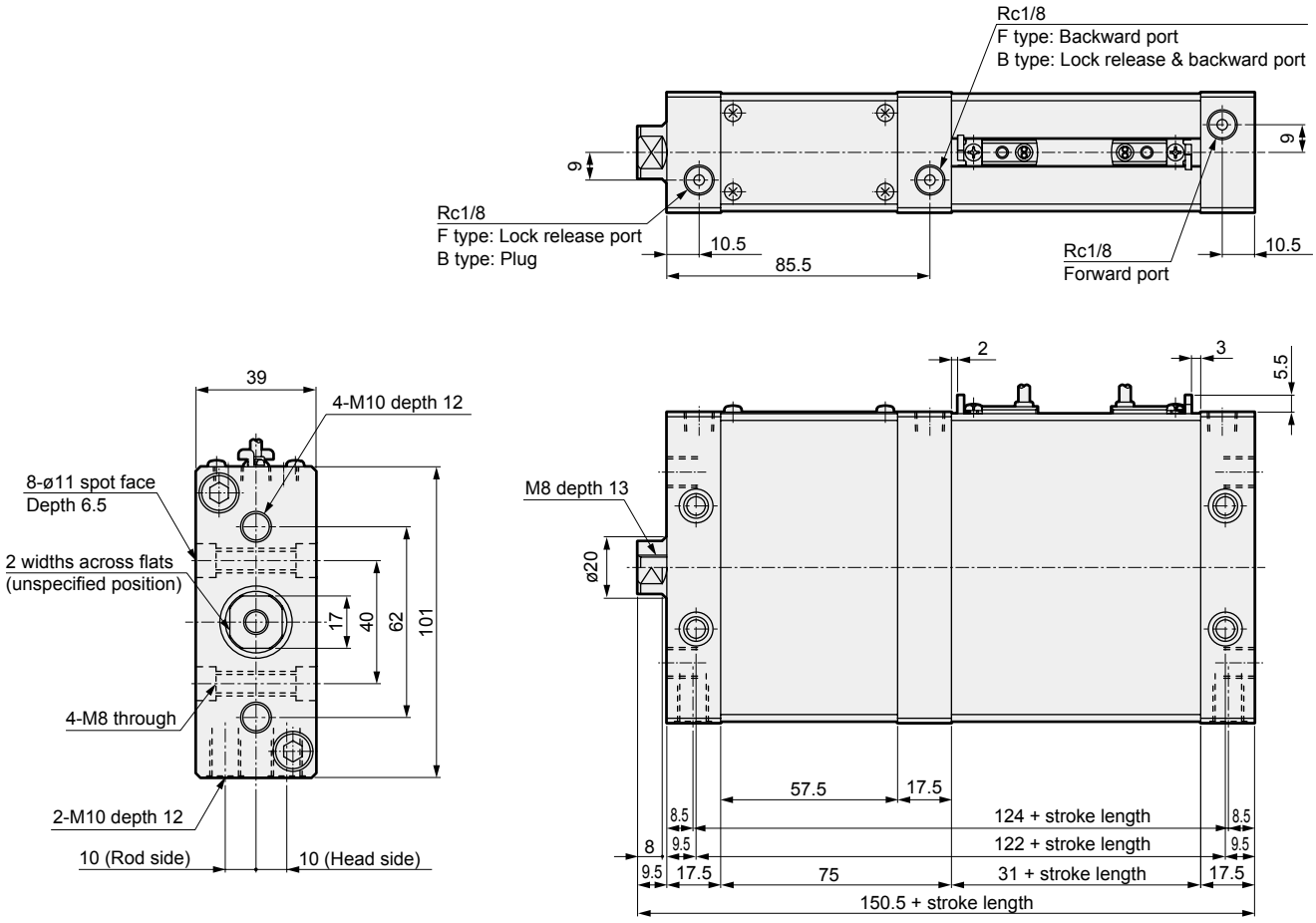

● Rod end male thread
(Option code: N)

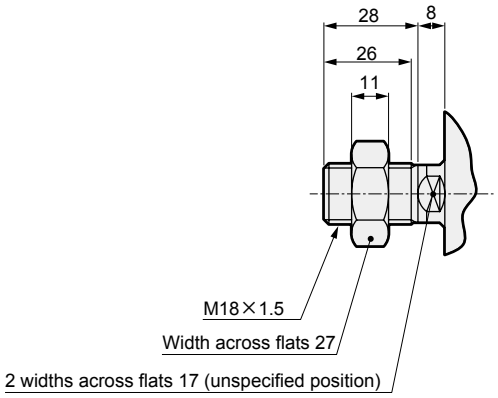

*1: For same-surface installation with 2 switches, the stroke length of 35 mm and over is required. For the stroke length of that value or less, set on both sides.

Dimensions (ø63)

● UFCD-KL-63-F/B (forward/backward locking)

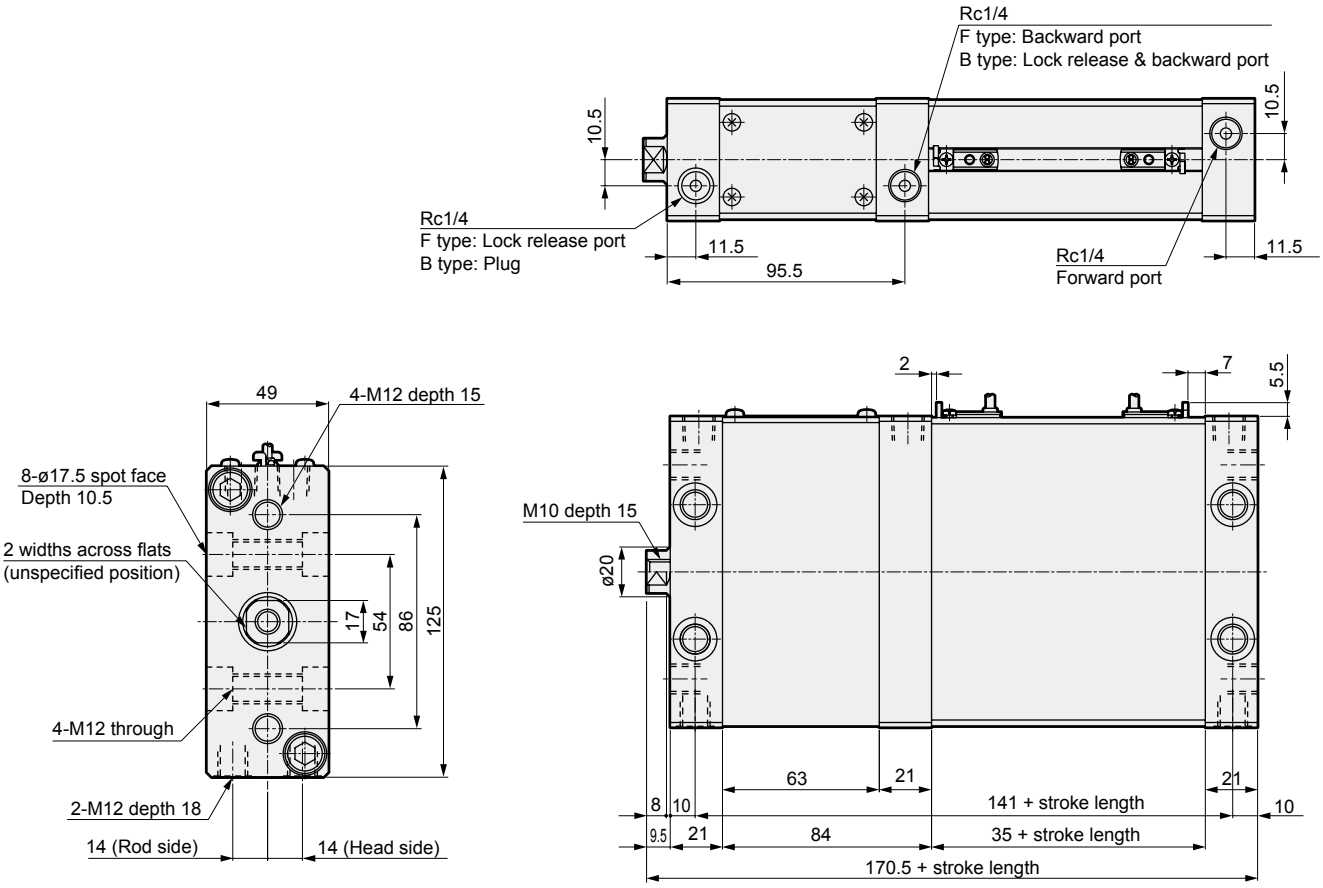

● Rod end male thread
(Option code: N)

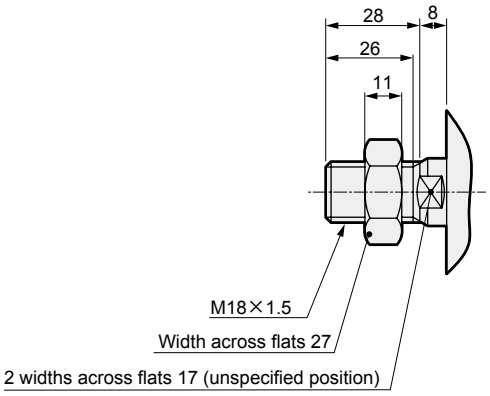

*1: For same-surface installation with 2 switches, the stroke length of 30 mm and over is required. For the stroke length of that value or less, set on both sides.

Pneumatic components

Safety Precautions

Be sure to read this section before use.
Refer to Intro Page 73 for general information of the cylinder, and to Intro Page 80 for general information of the cylinder switch.

Product-specific cautions: Free position locking flat cylinder UFCD Series

Design/selection

WARNING

- Cylinder with position locking mechanism (for holding cylinder stationary).
  Emergency stops (while the cylinder is in operation) can significantly decrease the service life.

- If back pressure is applied to the locking mechanism, the lock may be released. Use a discrete valve, or use an individual exhaust manifold.

- Do not apply torque to the rod when locked because the holding force may decrease, creating a dangerous condition. Also, use this product in mechanisms in which the rod does not rotate.

- To release the lock, when using forward locking, supply pressure to port B, and when using backward locking, supply pressure to port A. Check that load is not applied to the locking mechanism. When both ports A and B are exhausted and the piston is locked, if pressure is supplied to port A for forward locking or to port B for backward locking, the lock may not be released or, even if released, the piston rod may pop out, creating a hazard.

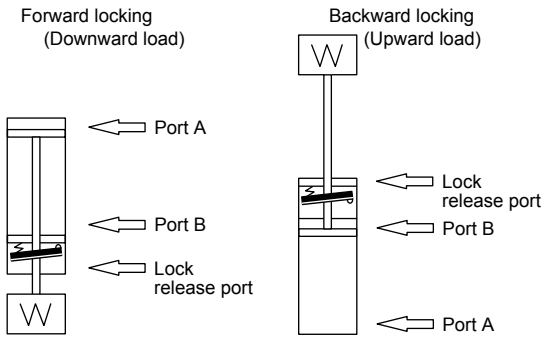

- Do not use multiple synchronized cylinders with position locking. If the synchronization deviates, an excess moment load or load concentration is applied to the cylinder locked first, risking lock release defects, shortened service life, or damage.

CAUTION

- Basic circuit diagram
  Arrange the air piping of this cylinder as shown in the figure below. Arranging the pipes differently from the figure below, such as piping the position locking part as a single unit, may cause problems such as delayed response.

  1. Be sure to branch the piping of this cylinder after the valve into the position locking part (lock release port as main piping) and cylinder part (cylinder port as branch piping) as shown in the figure below.

  2. Be sure to design the piping so that the lock is released before the cylinder starts operating. Failure to do so may prevent unlocking or cause the piston rod to jump out.

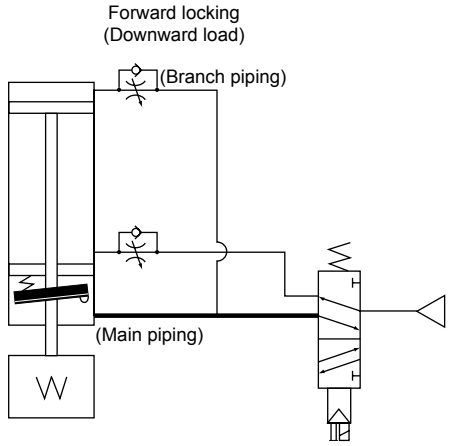

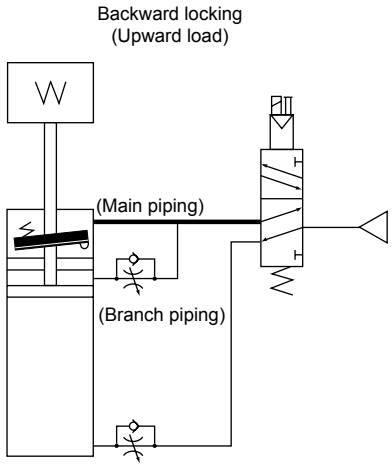

Using the emergency stop with the air piping as shown in the figure above will move the cylinder backward in a forward locking and forward in a backward locking, returning it to the original position. (When there is no residual pressure, the cylinder stops at that point.)

Mounting, installation and adjustment

⚠ WARNING

■ Do not apply grease to the piston rod because the holding force may decrease, creating a dangerous condition.

⚠ CAUTION

■ Main piping in the basic circuit diagram on the previous page should be thicker and shorter than branch piping.

■ For male threads with load mounted on ends, fix the wrench hook at the end of the rod with a wrench and tighten.

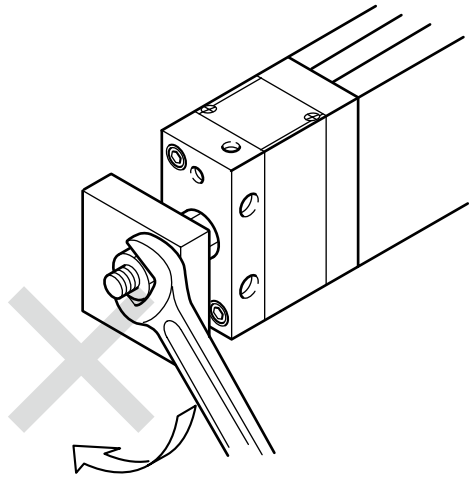

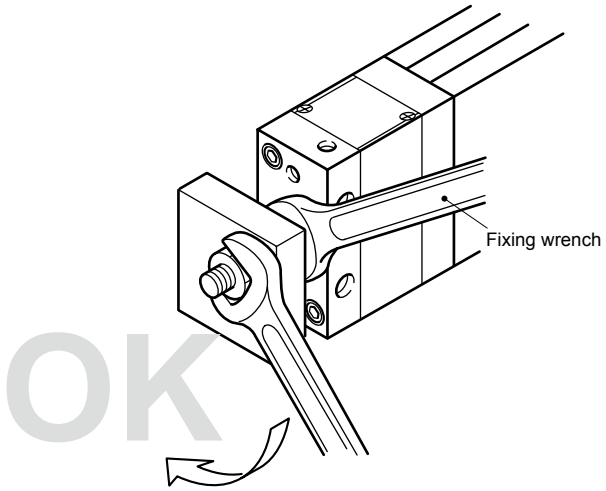

■ For female threads, fix the wrench hook at the end of the rod with a wrench using a standard tool (Allen wrench), and tighten.

■ Avoid using the product so as to apply rotation torque to the piston rod. When inevitable, use within the allowable torque range.

Item \ Model No.	ø25	ø32	ø40	ø50	ø63
Allowable torque (N·m)	1	1.6	2.5	3.9	5.9

● Do not apply rotation torque with impact, or with instantaneous changes in torque load direction.

■ Be sure to provide a guide separately when using multiple synchronized cylinders.
Using only the cylinder may impair synchronicity and cause the rod to twist, leading to malfunctions.

Use/maintenance

⚠ WARNING

- Do not apply additional grease to the piston rod or wipe off the grease that is already applied.
- Do not disassemble the unit, as doing so may be dangerous.
- Always use the product with the dust cover on, except for when performing manual release, in order to prevent failure or malfunction.
- If no air pressure is supplied in vertical mounting, etc., holding force may not be sufficient when the lock is manually released. This may cause the rod to move (drop) with the load's weight.
  For safety, take the following measures before manually releasing the lock:
  - Move the load to the bottom end.
  - Provide a stopper to the load
  - Apply air pressure to the cylinder to balance the load.

⚠ CAUTION

- When locking the first time after leaving the lock released for a long time, a delayed response may occur in the lock.
  Do not leave the lock pressurized, and operate the lock at each cylinder operation.
  (Use the basic circuit diagram shown on page 898)
- Keeping the cylinder with pressure applied to the lock mechanism may cause the lock to release.
  Do not use 3-position closed center and 3-position P/A/B connection solenoid valves.
- Due to the structure, the piston rod drops by about 1 mm when the lock is applied.

- How to unlock manually

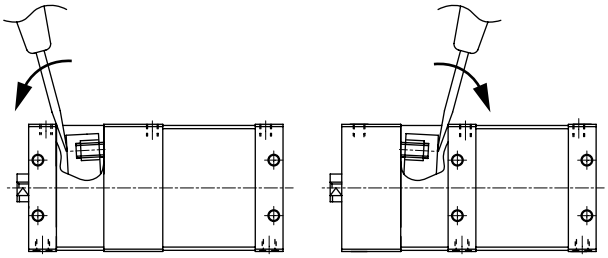

Forward locking (lock direction ←) Backward locking (lock direction →)

- Remove the cover, insert a flathead screwdriver or the like and lightly push it down in the direction of arrow A to lift the lock plate, unlock and free the piston rod.

- The cylinder body may be damaged or may malfunction if a unit with excessive inertia, etc., is actuated. Use within the allowable absorbed energy range.

USC

Free position locking large bore size cylinder

ø40/ø50/ø63/ø80/ø100

With brake/position locking

Overview

Cylinder equipped with position locking mechanism capable of stopping at any position of the stroke for standard SCA2 Series medium bore size cylinders (ø40 to ø100).

Features

High abrasion-resistant round slit method

New long life position locking mechanism is used. Applying torque M to the lock plate generates axial force F.

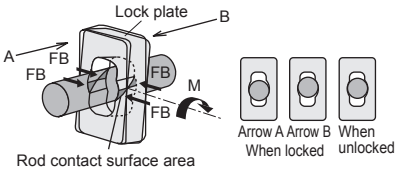

Lockable at any point throughout full stroke

The locking position can be at any point throughout the full stroke, including the stroke end, as long as the piston rod remains still.

No more workpiece damage

Prevents the cylinder from falling due to its own weight during power blackouts, etc. This resolves the workpiece damage issue.

Easy lock release

Loosening nut and turning release lever results in unlocking.

2 types of lock direction

Either forward lock or backward lock can be selected.

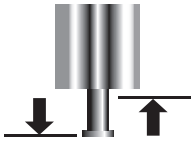

Lock reverse direction is free

Piston rod moves freely in reverse lock direction, and is therefore easy to remove even with workpiece clamped.

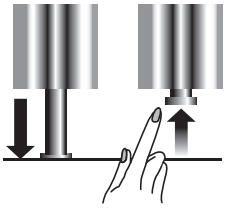

CONTENTS

Series variation	902
Operational explanation	902
● Double acting/single rod (USC)	904
● Double acting/with coil scraper (USC-G1)	904
USC common accessory dimensions	923
⚠ Safety precautions	924

The cylinder switches T2YH, T2YV, T3YH, and T3YV are scheduled for end of production at the end of December 2023.

Series variation

Free position locking large bore size cylinder USC Series

Variation	Model No. JIS symbol	Bore size (mm)	Standard stroke (mm) 25	50	75	100	150	200	250	300	350	400	450	500	Min. stroke (mm)	Max. stroke (mm)	Available stroke (mm)	Custom stroke (per mm)	Mounting: Basic 00	Mounting: Axial foot LB
Double acting	USC	ø40	●	●	●	●	●	●	●	●	●	●	●	●	1	600	1600	1	●	●
		ø50	●	●	●	●	●	●	●	●	●	●	●	●			2000		●	●
		ø63	●	●	●	●	●	●	●	●	●	●	●	●			2500		●	●
		ø80	●	●	●	●	●	●	●	●	●	●	●	●		700	2500		●	●
		ø100	●	●	●	●	●	●	●	●	●	●	●	●		800	2500		●	●
Double acting with coil scraper	USC-G1	ø40	●	●	●	●	●	●	●	●	●	●	●	●	1	600	1600	1	●	●
		ø50	●	●	●	●	●	●	●	●	●	●	●	●			2000		●	●
		ø63	●	●	●	●	●	●	●	●	●	●	●	●			2500		●	●
		ø80	●	●	●	●	●	●	●	●	●	●	●	●		700	2500		●	●
		ø100	●	●	●	●	●	●	●	●	●	●	●	●		800	2500		●	●

Operational explanation

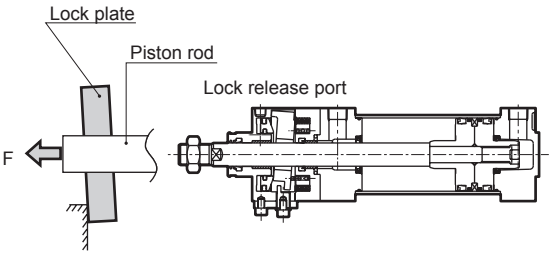

■ Lock operation
When exhausting air from lock release port, the lock plate tilts due to spring force, and the piston rod is held.

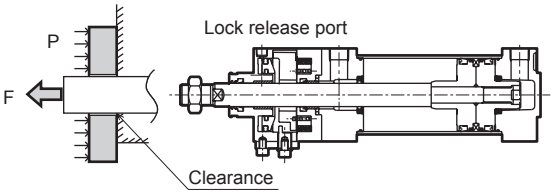

■ Unlocked
Air supply from the lock release port brings the lock plate to vertical. This creates a clearance between the lock plate and the piston rod, allowing the rod to move freely.

LCM
LCR
LCG
LCW
LCX
STM
STG
STS/STL
STR2
UCA2
ULK*
JSK/M2
JSG
JSC3/JSC4
USSD
UFCD
USC
UB
JSB3
LMB
LML
HCM
HCA
LBC
CAC4
UCAC2
CAC-N
UCAC-N
RCS2
RCC2
PCC
SHC
MCP
GLC
MFC
BBS
RRC
GRC
RV3*
NHS
HRL
LN
Hand
Chuk
MecHnd/Chuk
ShkAbs
FJ
FK
SpdContr
Ending

●: Standard ◎: Option ■: Not available

Mounting								Cushion				Option						Accessory					Switch	Page
Rod side flange	Head side flange	Head side special flange	Eye bracket	Clevis bracket	Intermediate trunnion	Rod side trunnion	Head side trunnion	Without cushion	Both sides cushioned	Rod side cushioned	Head side cushioned	Bellows (100°C)	Bellows (250°C)	Piston rod material change (stainless steel)	Cushion needle position S	Cushion needle position T	Copper and PTFE free	Rod eye	Rod clevis	Eye bracket	Clevis bracket	Trunnion No. 2 bracket		
FA	FB	FC	CA	CB	TC	TA	TB	N	B	R	H	J	L	M	S	T	P6	I	Y	B1	B2	B4		
●	●	●	●	●	●	●	●	●	●	●	●	◎	◎	◎	◎	◎	◎	◎	◎	◎	◎	◎		
●	●	●	●	●	●	●	●	●	●	●	●	◎	◎	◎	◎	◎	◎	◎	◎	◎	◎	◎		
●	●	●	●	●	●	●	●	●	●	●	●	◎	◎	◎	◎	◎	◎	◎	◎	◎	◎	◎	◎	904
●	●	●	●	●	●	●	●	●	●	●	●	◎	◎	◎	◎	◎	◎	◎	◎	◎	◎	◎		
●	●	●	●	●	●	●	●	●	●	●	●	◎	◎	◎	◎	◎	◎	◎	◎	◎	◎	◎		
●	●	●	●	●	●	●	●	●	●	●	●	◎	◎	◎	◎	◎	◎	◎	◎	◎	◎	◎		
●	●	●	●	●	●	●	●	●	●	●	●	◎	◎	◎	◎	◎	◎	◎	◎	◎	◎	◎		
●	●	●	●	●	●	●	●	●	●	●	●	◎	◎	◎	◎	◎	◎	◎	◎	◎	◎	◎	◎	904
●	●	●	●	●	●	●	●	●	●	●	●	◎	◎	◎	◎	◎	◎	◎	◎	◎	◎	◎		
●	●	●	●	●	●	●	●	●	●	●	●	◎	◎	◎	◎	◎	◎	◎	◎	◎	◎	◎		
●	●	●	●	●	●	●	●	●	●	●	●	◎	◎	◎	◎	◎	◎	◎	◎	◎	◎	◎		

Free position locking large bore size cylinder double acting/single rod double acting/coil scraper

USC/USC-G1 Series

● Bore size: ø40/ø50/ø63/ø80/ø100

RoHS CAD

Specifications

Item		USC (double acting/single rod)/USC-G1 (double acting with coil scraper)				
Actuation		Double acting				
Working fluid		Compressed air				
Max. working pressure MPa		1.0 (≈150 psi, 10 bar)				
Min. working pressure MPa	Cylinder	0.1 (≈15 psi, 1 bar)				
	Locking mechanism	0.25 (≈36 psi, 2.5 bar)				
Proof pressure MPa		1.6 (≈230 psi, 16 bar)				
Ambient temperature °C		-10 (14°F) to 60 (140°F) (no freezing)				
Bore size mm		ø40	ø50	ø63	ø80	ø100
Port size Rc	Cylinder	1/4	3/8	3/8	1/2	1/2
	Locking mechanism	1/8				
Stroke tolerance mm		$^{+0.9}_{0}$ (to 300) $^{+1.4}_{0}$ (to 1000)				
Lock force N		1005	1570	2493	4021	6283
Working piston speed mm/s		50 to 1000 (Operate within the absorbed energy.)				
Cushion		With or without cushion can be selected				
Effective cushion length mm		14.6	16.6	16.6	20.6	23.6
Lubrication		Not required (use turbine oil class 1 ISO VG32 if necessary for lubrication)				
Allowable absorbed energy J *1	Cushioned	4.29	8.37	15.8	27.9	49.8
	Without cushion	Cannot absorb high energy generated by external load. We recommend using an external shock absorber.				

*1 : If the kinetic energy is high due to high load or fast piston speeds, consider the use of a separate shock absorber and use the product within the range where the kinetic energy can be absorbed.

Stroke

Bore size (mm)	Standard stroke (mm)	Max. stroke (mm)	Available stroke (mm)	Min. stroke (mm)
ø40	25/50/75/100/150/200 250/300/350/400/450 500	600	1600	1
ø50			2000	
ø63			2500	
ø80		700		
ø100		800	*5	*3

*1 : The custom stroke is available in 1 mm increments.
*2 : For types with switch, minimum stroke varies depending on the mounting method. Refer to the table on the following page.
When the stroke is 15 mm or less, the two switches could turn ON at the same time.
In this case, adjust switch mounting positions to be as far apart as possible.
*3 : A min. stroke of 1 mm can be manufactured. Take into account the stroke tolerance when placing an order.
*4 : If max. stroke is exceeded, product specifications may not be satisfied depending on the conditions. Refer to Ending Page 69.
*5 : The max. stroke available for ø63 to ø100 bore size models with bellows is 2000 mm.

LCM
LCR
LCG
LCW
LCX
STM
STG
STS/STL
STR2
UCA2
ULK*
JSK/M2
JSG
JSC3/JSC4
USSD
UFCD
USC
UB
JSB3
LMB
LML
HCM
HCA
LBC
CAC4
UCAC2
CAC-N
UCAC-N
RCS2
RCC2
PCC
SHC
MCP
GLC
MFC
BBS
RRC
GRC
RV3*
NHS
HRL
LN
Hand
Chuk
MecHnd/Chuk
ShkAbs
FJ
FK
SpdContr
Ending

Min. stroke with switch (T-switch)

● T0/T5

Switch quantity	Different surface mounting				Same surface mounting				Center trunnion mounting				Rod side trunnion mounting No position detection at rod side stroke end.	Head side trunnion mounting No position detection at head side stroke end.
Bore size	1	2	3	4	1	2	3	4	1	2	3	4	1	1
ø40	20(10)	20(20)	40(40)	60(60)	20(10)	60(45)	105(75)	150(102)	110(110)	110(110)	175(145)	175(145)	50(50)	50(50)
ø50	15(10)	20(20)	40(40)	60(60)	15(10)	20(20)	65(50)	65(60)	135(135)	135(135)	135(135)	135(135)	60(60)	60(60)
ø63	15(10)	20(20)	40(40)	60(60)	15(10)	20(20)	70(55)	70(60)	110(95)	110(95)	110(100)	110(100)	50(45)	50(45)
ø80	15(15)	25(25)	45(45)	65(65)	15(15)	25(25)	70(55)	70(65)	115(85)	115(85)	115(105)	115(105)	55(40)	55(40)
ø100	15(15)	25(25)	45(45)	70(70)	15(15)	25(25)	70(55)	70(70)	125(95)	125(95)	125(115)	125(115)	60(45)	60(45)

*1: The values in ( ) are of T*V (L-shaped lead wire).
*2: When the stroke is 15 mm or less, the two switches could turn ON at the same time. In this case, adjust switch mounting positions to be as far apart as possible.

● T8

Switch quantity	Different surface mounting				Same surface mounting				Center trunnion mounting				Rod side trunnion mounting No position detection at rod side stroke end.	Head side trunnion mounting No position detection at head side stroke end.
Bore size	1	2	3	4	1	2	3	4	1	2	3	4	1	1
ø40	15(10)	20(20)	40(40)	60(60)	15(10)	50(35)	95(65)	140(95)	95(85)	95(85)	155(125)	155(125)	45(40)	45(40)
ø50	10(10)	20(20)	40(40)	60(60)	10(10)	20(20)	70(55)	70(60)	115(115)	115(115)	135(135)	135(135)	50(50)	50(50)
ø63	10(10)	20(20)	40(40)	60(60)	10(10)	20(20)	70(55)	70(60)	95(75)	95(75)	110(110)	110(110)	45(35)	45(35)
ø80	15(15)	25(25)	45(45)	65(65)	15(15)	25(25)	70(55)	70(65)	100(70)	100(70)	115(115)	115(115)	50(35)	50(35)
ø100	15(15)	25(25)	45(45)	65(65)	15(15)	25(25)	70(55)	70(65)	110(80)	110(80)	125(125)	125(125)	55(40)	55(40)

*1: The values in ( ) are of T*V (L-shaped lead wire).
*2: When the stroke is 15 mm or less, the two switches could turn ON at the same time. In this case, adjust switch mounting positions to be as far apart as possible.

● T2/T3

Switch quantity	Different surface mounting				Same surface mounting				Center trunnion mounting				Rod side trunnion mounting No position detection at rod side stroke end.	Head side trunnion mounting No position detection at head side stroke end.
Bore size	1	2	3	4	1	2	3	4	1	2	3	4	1	1
ø40	20(10)	20(15)	25(25)	40(40)	20(10)	60(45)	105(75)	150(105)	105(75)	105(75)	165(135)	165(135)	50(35)	50(35)
ø50	15(10)	15(15)	25(25)	40(40)	15(10)	15(15)	60(45)	60(45)	105(75)	105(75)	105(75)	105(75)	45(30)	45(30)
ø63	15(10)	15(15)	25(25)	40(40)	15(10)	15(15)	60(45)	60(45)	110(80)	110(80)	110(85)	110(85)	50(35)	50(35)
ø80	15(10)	15(15)	30(30)	45(45)	15(10)	15(15)	60(45)	60(45)	115(85)	115(85)	115(90)	115(90)	55(40)	55(40)
ø100	10(10)	15(15)	30(30)	45(45)	10(10)	15(15)	60(45)	60(45)	125(95)	125(95)	125(100)	125(100)	60(45)	60(45)

*1: The values in ( ) are of T*V (L-shaped lead wire).
*2: When the stroke is 15 mm or less, the two switches could turn ON at the same time. In this case, adjust switch mounting positions to be as far apart as possible.

● Min. stroke with T1/T2Y/T3Y/T2YD switches

Switch quantity	Different surface mounting				Same surface mounting				Center trunnion mounting				Rod side trunnion mounting No position detection at rod side stroke end.	Head side trunnion mounting No position detection at head side stroke end.
Bore size	1	2	3	4	1	2	3	4	1	2	3	4	1	1
ø40	20(10)	20(15)	25(25)	40(40)	20(10)	60(45)	105(75)	150(105)	105(75)	105(75)	165(135)	165(135)	50(35)	50(35)
ø50	15(10)	15(15)	25(25)	40(40)	15(10)	15(15)	60(45)	60(45)	100(70)	100(70)	100(75)	100(75)	45(30)	45(30)
ø63	15(10)	15(15)	25(25)	40(40)	15(10)	15(15)	60(45)	60(45)	105(75)	105(75)	105(85)	105(85)	50(35)	50(35)
ø80	15(10)	15(15)	30(30)	45(45)	15(10)	15(15)	60(45)	60(45)	110(80)	110(80)	110(90)	110(90)	55(40)	55(40)
ø100	10(10)	15(15)	30(30)	45(45)	10(10)	15(15)	60(45)	60(45)	120(90)	120(90)	120(100)	120(100)	60(45)	60(45)

*1: The values in ( ) are of T*V (L-shaped lead wire). T2YD does not have a L-shaped lead wire (V).
*2: When the stroke is 15 mm or less, the two switches could turn ON at the same time. In this case, adjust switch mounting positions to be as far apart as possible.

● Min. stroke with T2W/T3W switches

Switch quantity	Different surface mounting				Same surface mounting				Center trunnion mounting				Rod side trunnion mounting No position detection at rod side stroke end.	Head side trunnion mounting No position detection at head side stroke end.
Bore size	1	2	3	4	1	2	3	4	1	2	3	4	1	1
ø40	20(5)	20(10)	20(15)	25(25)	20(5)	65(50)	110(80)	155(110)	110(80)	110(80)	170(140)	170(140)	50(35)	50(35)
ø50	20(5)	20(10)	20(15)	20(20)	20(5)	20(10)	65(40)	65(40)	110(80)	110(80)	110(60)	110(60)	50(35)	50(35)
ø63	20(5)	20(10)	20(15)	25(25)	20(5)	20(10)	65(40)	65(40)	115(85)	115(85)	115(65)	115(65)	55(40)	55(40)
ø80	15(5)	15(10)	15(15)	25(25)	15(5)	15(10)	60(40)	60(40)	120(90)	120(90)	120(70)	120(70)	55(40)	55(40)
ø100	10(5)	10(10)	20(20)	25(25)	10(5)	10(10)	60(40)	60(40)	130(100)	130(100)	130(85)	130(85)	60(45)	60(45)

*1: The values in ( ) are of T*V (L-shaped lead wire).
*2: When the stroke is 15 mm or less, the two switches could turn ON at the same time. In this case, adjust switch mounting positions to be as far apart as possible.

LCM
LCR
LCG
LCW
LCX
STM
STG
STS/STL
STR2
UCA2
ULK*
JSK/M2
JSG
JSC3/JSC4
USSD
UFCD
USC
UB
JSB3
LMB
LML
HCM
HCA
LBC
CAC4
UCAC2
CAC-N
UCAC-N
RCS2
RCC2
PCC
SHC
MCP
GLC
MFC
BBS
RRC
GRC
RV3*
NHS
HRL
LN
Hand
Chuk
MecHnd/Chuk
ShkAbs
FJ
FK
SpdContr
Ending

Switch specifications (T-switch)

● 1-color/2-color LED/for AC magnetic field proof

Item	Proximity 2-wire	Proximity 2-wire			Proximity 3-wire				Reed 2-wire							Proximity 2-wire
	T1H/ T1V	T2H/T2V/ T2JH/ T2JV	T2YH/ T2YV	T2WH/ T2WV	T3H/ T3V	T3PH/ T3PV	T3YH/ T3YV	T3WH/ T3WV	T0H/T0V		T5H/T5V		T8H/T8V			T2YD(*4) T2YDT
Applications	For programmable controller, relay, compact solenoid valve	Dedicated for programmable controller			For programmable controller, relay				For programmable controller, relay		For programmable controller, relay, IC circuit (no indicator lamp), serial connection		For programmable controller, relay			For programmable controller
Output method	-				NPN output	PNP output	NPN output	NPN output	-							
Pwr. supp. V.	-				10 to 28 VDC				-							
Load voltage	85 to 265 VAC	10 to 30 VDC		24 VDC ±10%	30 VDC or less				12/24 VDC	100/110 VAC	5/12/24 VDC	100/110 VAC	12/24 VDC	110 VAC	220 VAC	24 VDC ±10%
Load current	5 to 100 mA	5 to 20 mA (*3)			100 mA or less		50 mA or less		5 to 50 mA	7 to 20 mA	≤50 mA	≤20 mA	5 to 50 mA	7 to 20 mA	7 to 10 mA	5 to 20 mA
Indicator	LED (Lit when ON)	LED (Lit when ON)	Red/green LED (Lit when ON)	Red/green LED (Lit when ON)	LED (Lit when ON)	Yellow LED (Lit when ON)	Red/green LED (Lit when ON)	Red/green LED (Lit when ON)	LED (Lit when ON)		No indicator lamp		LED (Lit when ON)			Red/green LED (Lit when ON)
Leakage current	≤ 1 mA at 100 VAC, ≤ 2 mA at 200 VAC	1 mA or less			10 μA or less				0 mA							1 mA or less
Weight g	1 m:33 3 m:87 5 m:142	1 m:18 3 m:49 5 m:80	1 m:33 3 m:87 5 m:142	1 m:18 3 m:49 5 m:80	1 m:18 3 m:49 5 m:80		1 m:33 3 m:87 5 m:142	1 m:18 3 m:49 5 m:80	1 m:18 3 m:49 5 m:80				1 m:33 3 m:87 5 m:142			1 m:61 3 m:166 5 m:272

*1 : Refer to Ending Page 1 for detailed switch specifications and dimensions.
*2 : Switches other than the above models, such as switches with connectors, are also available. Refer to Ending Page 1.
*3 : The max. load current is 20 mA at 25°C. The current is lower than 20 mA if the operating ambient temperature around the switch is higher than 25˚C. (5 to 10 mA at 60°C)
*4 : AC magnetic field proof switch (T2YD/T2YDT) cannot be used in DC magnetic fields.

Switch specifications (H-switch)

Item	Strong magnetic field proof, reed 2-wire	
	H0	H0Y (2-color LED)
Applications	Relay, programmable controller	Dedicated for programmable controller
Load voltage/ current	12/24 VDC, 110 VAC 5 to 50 mA, 7 to 20 mA	24 VDC, 5 to 50 mA (*2)
Indicator	Green LED Lit when ON	Red/green LED Lit when ON
Leakage current	10 μA or less	
Max. shock resistance	294 m/s^2	
Weight g	1 m:76 3 m:181 5 m:289	

*1 : Refer to Ending Page 1 for other switch specifications.
*2 : Max. load current is applied at 25°C. The current is lower than 20 mA if the operating ambient temperature around the switch is higher than 25˚C. (5 to 10 mA at 60°C)

Cylinder weight table

(Unit: kg)

Bore size	Product weight when stroke (S) = 0 mm							Switch weight	Mounting bracket weight		Additional weight per S = 100 mm
	Basic (00)	Foot (LB)	Flange (FA/FB)	Special flange (FC)	Eye bracket (CA)	Eye bracket (CB)	Trunnion (TA,TB,TC)		T type	H type	
ø40	1.40	1.58	1.83	1.49	1.75	1.75	1.78	Refer to the weight in the switch specifications.	0.024	0.028	0.39
ø50	2.04	2.21	2.54	2.15	2.48	2.48	2.56		0.022	0.026	0.46
ø63	2.83	3.2	3.89	3.01	3.38	3.43	3.68		0.020	0.024	0.50
ø80	4.94	5.71	6.82	5.30	6.48	6.49	6.30		0.026	0.029	0.90
ø100	8.03	8.95	10.72	8.58	10.18	10.14	10.55		0.024	0.028	1.12

Theoretical thrust table

(Unit: N)

Bore size (mm)	Operating direction	Working pressure MPa										
		0.1	0.15	0.2	0.3	0.4	0.5	0.6	0.7	0.8	0.9	1.0
ø40	Push	$1.26x10^2$	$1.88x10^2$	$2.51x10^2$	$3.77x10^2$	$5.03x10^2$	$6.28x10^2$	$7.54x10^2$	$8.80x10^2$	$1.01x10^3$	$1.13x10^3$	$1.26x10^3$
	Pull	$1.06x10^2$	$1.58x10^2$	$2.11x10^2$	$3.17x10^2$	$4.22x10^2$	$5.28x10^2$	$6.33x10^2$	$7.39x10^2$	$8.44x10^2$	$9.50x10^2$	$1.06x10^3$
ø50	Push	$1.96x10^2$	$2.95x10^2$	$3.93x10^2$	$5.89x10^2$	$7.85x10^2$	$9.82x10^2$	$1.18x10^3$	$1.37x10^3$	$1.57x10^3$	$1.77x10^3$	$1.96x10^3$
	Pull	$1.65x10^2$	$2.47x10^2$	$3.30x10^2$	$4.95x10^2$	$6.60x10^2$	$8.25x10^2$	$9.90x10^2$	$1.15x10^3$	$1.32x10^3$	$1.48x10^3$	$1.65x10^3$
ø63	Push	$3.12x10^2$	$4.68x10^2$	$6.23x10^2$	$9.35x10^2$	$1.25x10^3$	$1.56x10^3$	$1.87x10^3$	$2.18x10^3$	$2.49x10^3$	$2.81x10^3$	$3.12x10^3$
	Pull	$2.80x10^2$	$4.20x10^2$	$5.61x10^2$	$8.41x10^2$	$1.12x10^3$	$1.40x10^3$	$1.68x10^3$	$1.96x10^3$	$2.24x10^3$	$2.52x10^3$	$2.80x10^3$
ø80	Push	$5.03x10^2$	$7.54x10^2$	$1.01x10^3$	$1.51x10^3$	$2.01x10^3$	$2.51x10^3$	$3.02x10^3$	$3.52x10^3$	$4.02x10^3$	$4.52x10^3$	$5.03x10^3$
	Pull	$4.54x10^2$	$6.80x10^2$	$9.07x10^2$	$1.36x10^3$	$1.81x10^3$	$2.27x10^3$	$2.72x10^3$	$3.17x10^3$	$3.63x10^3$	$4.08x10^3$	$4.54x10^3$
ø100	Push	$7.85x10^2$	$1.18x10^3$	$1.57x10^3$	$2.36x10^3$	$3.14x10^3$	$3.93x10^3$	$4.71x10^3$	$5.50x10^3$	$6.28x10^3$	$7.07x10^3$	$7.85x10^3$
	Pull	$7.15x10^2$	$1.07x10^3$	$1.43x10^3$	$2.14x10^3$	$2.86x10^3$	$3.57x10^3$	$4.29x10^3$	$5.00x10^3$	$5.72x10^3$	$6.43x10^3$	$7.15x10^3$

LCM
LCR
LCG
LCW
LCX
STM
STG
STS/STL
STR2
UCA2
ULK*
JSK/M2
JSG
JSC3/JSC4
USSD
UFCD
USC
UB
JSB3
LMB
LML
HCM
HCA
LBC
CAC4
UCAC2
CAC-N
UCAC-N
RCS2
RCC2
PCC
SHC
MCP
GLC
MFC
BBS
RRC
GRC
RV3*
NHS
HRL
LN
Hand
Chuk
MecHnd/Chuk
ShkAbs
FJ
FK
SpdContr
Ending

How to order

● Without switch (built-in magnet for switch)

USC — LB - 40 B - 100 - F — S I

● R type with switch (built-in magnet for switch)

USC — LB - 40 B - 100 - F - T0H - R - S I

● Strong magnetic field proof switch (HO/HOY) (built-in magnet for switch)

USC-L2 - LB - 40 B - 100 - F - H0Y - R - S I

Ⓐ Model No. — USC-L2
Ⓑ Mounting — LB
Ⓒ Bore size — 40
Ⓓ Cushion — B
Ⓔ Stroke *1 — 100
Ⓕ Lock direction — F
Ⓖ Switch model No. *indicates the lead wire length. — S
Ⓗ Switch quantity *3 — R
Ⓘ Option *5 — I
Ⓙ Accessory *6 — I

Code	Description
Ⓐ Model No.	
USC	Double acting/single rod
USC-G1	Double acting with coil scraper
Ⓑ Mounting	
00	Basic
LB	Axial foot
FA	Rod side flange
FB	Head side flange
FC	Head side special flange
CA	Eye bracket
CB	Clevis bracket (pin and snap ring attached)
TC	Intermediate trunnion
TA	Rod side trunnion
TB	Head side trunnion
Ⓒ Bore size (mm)	
40	ø40
50	ø50
63	ø63
80	ø80
100	ø100
Ⓓ Cushion	
B	Both sides cushioned
R	Rod side cushioned
H	Head side cushioned
N	Without cushion

Ⓔ Stroke (mm)

Bore size	Stroke *2	Available stroke	Custom stroke
ø40	1 to 600	1600	In 1 mm increments
ø50	1 to 600	2000	
ø63	1 to 600	2500	
ø80	1 to 700	2500	
ø100	1 to 800	2500	

Ⓕ Lock direction	
F	Forward locking
B	Backward locking
Ⓖ Switch model No.	
Refer to the switch model numbers on the following page.	
*** Lead wire length**	
Blank	1 m (standard)
3	3 m (option)
5	5 m (option)
Ⓗ Switch quantity	
R	1 on rod side
H	1 on head side
D	2
T	3

Ⓘ Option

		Max. ambient temperature	Instantaneous max. temperature
J	Bellows	100°C	200°C
L	Bellows	250°C	400°C
M	Piston rod material (stainless steel)		
Blank	Cushion needle position R (standard)		
S	Cushion needle position S		
T	Cushion needle position T		
P6	Copper and PTFE free (made to order)		

Ⓙ Accessory	
I	Rod eye
Y	Rod clevis (pin and snap ring attached)
B1	Eye bracket
B2	Clevis bracket (pin and snap ring attached)
B4	Trunnion No. 2 bracket

⚠ Precautions for model No. selection

*1 : The max. stroke available for ø63 to ø100 bore size models with bellows is 2000 mm.
*2 : Refer to page 905 for the min. stroke with switch.
*3 : When selecting TA or TB as mounting, the switch quantity is limited to "H" (1 on head side) for TA, and "R" (1 on rod side) for TB.
*4 : The instantaneous max. temperature is the temperature when sparks, cutting chips, etc., instantaneously contact the bellows.
*5 : When selecting TA or TB mounting, the switch quantity is limited to "H" (1 on head side) for TA, and "R" (1 on rod side) for TB.
*6 : "I" and "Y" cannot be selected together.

[Example of model No.]

USC-LB-40B-100-F-T0H-R-SI

Model: Free position locking medium bore size cylinder

Ⓐ Model No. : Double acting/single rod
Ⓑ Mounting : Axial foot
Ⓒ Bore size : ø40 mm
Ⓓ Cushion : Both sides cushioned
Ⓔ Stroke : 100mm
Ⓕ Lock direction : Forward locking
Ⓖ Switch model No. : Reed T0H switch, lead wire 1m
Ⓗ Switch quantity : 1 on rod side
Ⓘ Option : Cushion needle position S
Ⓙ Accessory : Rod eye

LCM
LCR
LCG
LCW
LCX
STM
STG
STS/STL
STR2
UCA2
ULK*
JSK/M2
JSG
JSC3/JSC4
USSD
UFCD
USC
UB
JSB3
LMB
LML
HCM
HCA
LBC
CAC4
UCAC2
CAC-N
UCAC-N
RCS2
RCC2
PCC
SHC
MCP
GLC
MFC
BBS
RRC
GRC
RV3*
NHS
HRL
LN
Hand
Chuk
MecHnd/Chuk
ShkAbs
FJ
FK
SpdContr
Ending

[G] Switch model No.

T-switch model No.						
Straight lead wire	L-shaped lead wire	Contact	Voltage AC	Voltage DC	Indicator	Lead wire
T0H*	T0V*	Reed	●	●	1-color LED	2-wire
T5H*	T5V*	Reed	●	●	No indicator lamp	2-wire
T8H*	T8V*	Reed	●	●	1-color LED	2-wire
T1H*	T1V*	Proximity	●		1-color LED	2-wire
T2H*	T2V*	Proximity		●	1-color LED	2-wire
T3H*	T3V*	Proximity		●	1-color LED	3-wire
T2WH*	T2WV*	Proximity		●	2-color LED	2-wire
T2YH*	T2YV*	Proximity		●	2-color LED	2-wire
T3WH*	T3WV*	Proximity		●	2-color LED	3-wire
T3YH*	T3YV*	Proximity		●	2-color LED	3-wire
T3PH*	T3PV*	Proximity		●	1-color LED	3-wire
T2YD*	-	Proximity		●	2-color LED	2-wire
T2YDT*	-	Proximity		●	AC magnetic field	2-wire
T2JH*	T2JV*	Proximity		●	1-color LED off-delay	2-wire

H-switch model No.					
Grommet	Contact	Voltage AC	Voltage DC	Indicator	Lead wire
HO*	Reed	●	●	Strong magn field 1-color LED	2-wire
HOY*	Reed		●	Strong magn field, 2-color LED	2-wire

How to order switch

[T-switch]

● Switch body + mounting bracket set

SCA2 - T0H - 40

- T0H: Switch model No. (Item Ⓖ)
- 40: Bore size (Item Ⓒ on page 908)

● Switch body only

SW - T0H

- T0H: Switch model No. (Item Ⓖ)

* Contact CKD when using an environment-friendly T-switch.

● Switch mounting bracket set

SCA2 - TS - 40

- TS: Mounting bracket
- 40: Bore size (Item Ⓒ on page 908)

[H-switch]

● Switch body + mounting bracket set

SCA2-L2 - H0 - 40

- H0: Switch model No. (Item Ⓖ)
- 40: Bore size (Item Ⓒ on page 908)

● Switch body only

SW - H0

- H0: Switch model No. (Item Ⓖ)

● Mounting bracket set

SCA2-L2 - H - 40

- H: Mounting bracket
- 40: Bore size (Item Ⓒ on page 908)

[T2YD type switch]

● Switch body + mounting bracket set

SCA2 - T2YD - 40

- T2YD: Switch model No.
- 40: Bore size (Item Ⓒ on page 908)

● Switch body only

SW - T2YD

- T2YD: Switch model No.

● Mounting bracket set

SCA2 - T - 40

- T: Mounting bracket
- 40: Bore size (Item Ⓒ on page 908)

Mounting bracket model No.

Bore size (mm) / Mounting bracket	ø40	ø50	ø63	ø80	ø100
Foot (LB)	S1-LB-40	S1-LB-50	S1-LB-63	S1-LB-80	S1-LB-100
Flange (FA)	USC-FA-40	USC-FA-50	USC-FA-63	USC-FA-80	USC-FA-100
Flange (FB)	S1-FA-40	S1-FA-50	S1-FA-63	S1-FA-80	S1-FA-100
Eye bracket (CA)	S1-CA-40	S1-CA-50	S1-CA-63	S1-CA-80	S1-CA-100
Clevis bracket (CB)	S1-CB-40	S1-CB-50	S1-CB-63	S1-CB-80	S1-CB-100

Note: The foot mounting bracket is provided as 2 pc./set.

LCM
LCR
LCG
LCW
LCX
STM
STG
STS/STL
STR2
UCA2
ULK*
JSK/M2
JSG
JSC3/JSC4
USSD
UFCD
USC
UB
JSB3
LMB
LML
HCM
HCA
LBC
CAC4
UCAC2
CAC-N
UCAC-N
RCS2
RCC2
PCC
SHC
MCP
GLC
MFC
BBS
RRC
GRC
RV3*
NHS
HRL
LN
Hand
Chuk
MecHnd/Chuk
ShkAbs
FJ
FK
SpdContr
Ending

Internal structure and parts list

[Common for F, B]

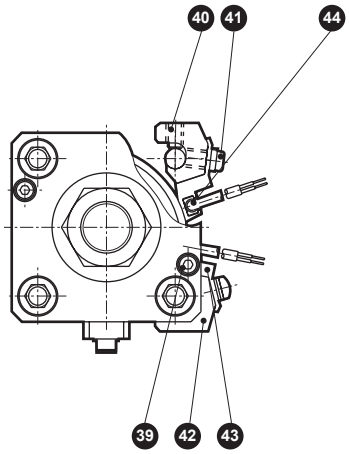

[F: Forward locking]

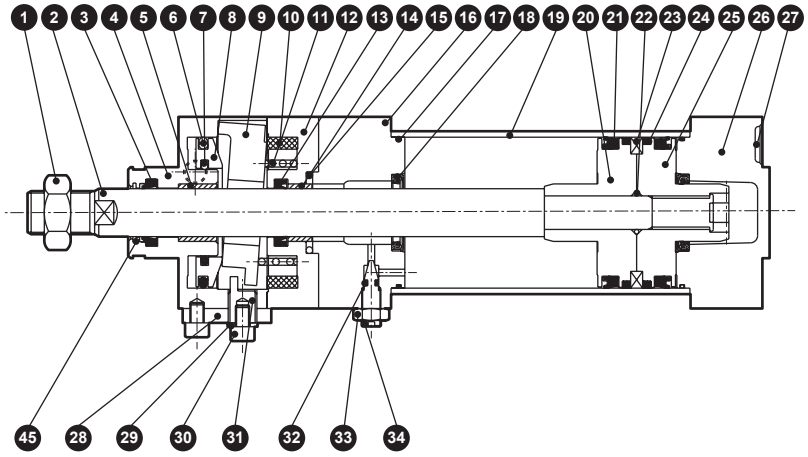

[B: Backward locking]

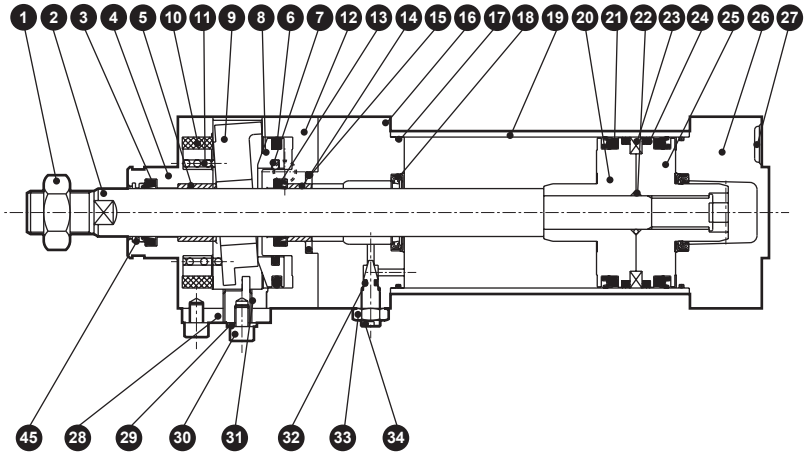

[Common for F, B]

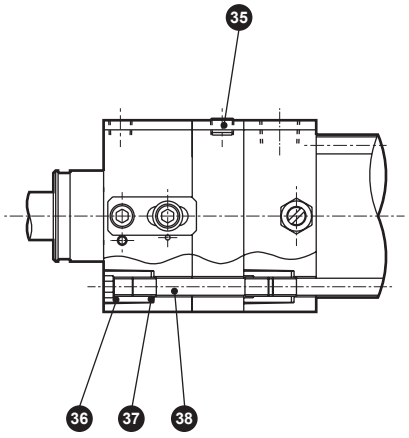

Brake section cannot be disassembled

Parts list

No.	Part name	Material	Remarks	No.	Part name	Material	Remarks
1	Rod nut	Steel	Zinc chromate	24	Wear ring	Polyacetal	
2	Piston rod	Steel	Industrial chrome plating	25	Piston H	Aluminum alloy die-casting	
3	Dust wiper	Nitrile rubber		26	Head cover	Aluminum alloy die-casting	Paint
4	Brake body A	Aluminum alloy	Black alumite	27	Masking plate	Aluminum	Paint
5	Bush	Oil impregnated bearing alloy		28	Release lever	Steel	
6	Release piston packing A	Nitrile rubber		29	Plain washer	Steel	
7	Release piston packing B	Nitrile rubber		30	Hexagon socket head cap screw	Steel	
8	Release piston	Steel	Zinc chromate	31	Release cam	Steel	
9	Lock plate	Special steel		32	Needle gasket	Nitrile rubber	
10	Cushion rubber	Urethane rubber		33	Needle nut	Copper alloy	
11	Spring	Steel	Black finish	34	Cushion needle	Copper alloy	
12	Brake body B	Aluminum alloy	Black alumite	35	Blanking plug	Steel	
13	Rod packing	Nitrile rubber		36	Round nut	Steel	Zinc chromate
14	Bush	Oil impregnated bearing alloy		37	Conical spring washer	Steel	Black finish
15	Gasket	Nitrile rubber		38	Tie rod	Steel	Zinc chromate
16	Rod cover	Aluminum alloy die-casting	Paint	39	Hexagon socket head cap screw	Steel	
17	Cylinder gasket	Nitrile rubber		40	Hexagon socket set screw	Steel	Black finish
18	Cushion packing	Urethane rubber, steel		41	Cross-recessed pan head machine screw	Steel	Zinc chromate
19	Cylinder tube	Aluminum alloy	Hard alumite	42	Switch mounting base	Aluminum alloy	
20	Piston R	Aluminum alloy die-casting		43	Switch holder	Aluminum alloy	
21	Piston packing	Nitrile rubber		44	Cylinder switch		
22	Piston gasket	Nitrile rubber		45	Coil scraper	Phosphor bronze	With coil scraper only
23	Magnet	Plastic					

Repair parts list (standard)

Bore size (mm)	Kit No.	Repair parts No.
ø40	USC-40K	❸ ⓭ ⓯ ⓱ ⓲ ㉑ ㉔ ㉜
ø50	USC-50K	
ø63	USC-63K	
ø80	USC-80K	
ø100	USC-100K	

Note: When you detach the lock mechanism part to replace repair parts, do not disassemble the lock mechanism part since a spring may pop out or the expected performance may become unreliable.

LCM
LCR
LCG
LCW
LCX
STM
STG
STS/STL
STR2
UCA2
ULK*
JSK/M2
JSG
JSC3/JSC4
USSD
UFCD
USC
UB
JSB3
LMB
LML
HCM
HCA
LBC
CAC4
UCAC2
CAC-N
UCAC-N
RCS2
RCC2
PCC
SHC
MCP
GLC
MFC
BBS
RRC
GRC
RV3*
NHS
HRL
LN
Hand
Chuk
MecHnd/Chuk
ShkAbs
FJ
FK
SpdContr
Ending

Dimensions

● Basic (00)

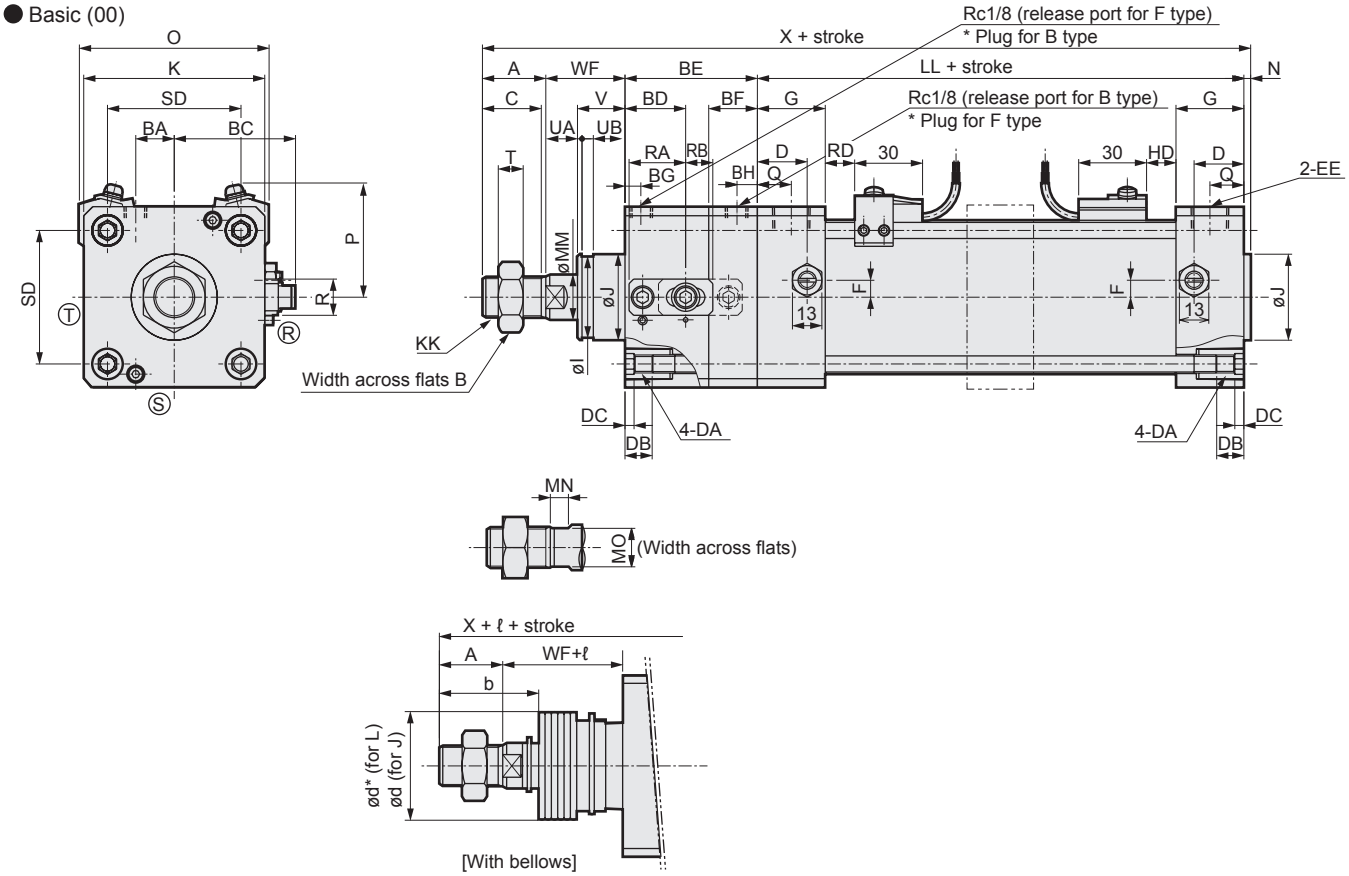

Code / Bore size	A	B	C	BA	BC	BD	BE	BF	BG	BH	D	DA	DB	DC	EE	F	G	J	K	KK
ø40	22	22	20	7.5	39.5	22	47	18	7	7	18	M8	12	4	Rc1/4	7.5	26	31	57	M14x1.5
ø50	28	27	26	10	43.5	25	54	20	7	8	20	M8	12	4	Rc3/8	0	28	38	66	M18x1.5
ø63	28	27	26	17	53.5	26.8	58.5	21.5	7	9	22	M8	12	4	Rc3/8	0	30	38	80	M18x1.5
ø80	36	32	34	21	62.5	33.3	71	25	8	10	26	M12	16	5	Rc1/2	0	34	43	98	M22x1.5
ø100	45	41	43	25	72.5	38	81.5	28.5	8	10.5	28	M12	16	5	Rc1/2	0	36	51	118	M26x1.5

Code / Bore size	LL	MM	MN	MO	N	Q	SD	T	V	R	RA	RB	I	UA	UB	WF	X
ø40	93	16	8	14	2	13	40.5	8	18.5	16	18	10	29	2	5	33.5	197.5
ø50	101	20	8	17	2.5	14	48	11	20.5	16	18	10	36	2	5	37	222.5
ø63	105	20	8	17	3	15	59	11	21	16	25	12	36	2	5	35	229.5
ø80	116	25	11	22	3.5	17	74	13	23.5	16	25	12	41	2	5	48	274.5
ø100	128	30	13	27	4	18	90	16	32	16	25	12	49	3	6	53	311.5

Code / Bore size	With bellows										
	b	d	d*	ℓ							
				50 or less	Over 50 to 100	Over 100 to 150	Over 150 to 200	Over 200 to 300	Over 300 to 400	Over 400 to 500	Over 500 *1
ø40	41	40	40	25.5	41.5	58.5	75.5	108.5	141.5	174.5	(Stroke/3.0) + 8
ø50	47	47	48	22	36	49	63	90	119	146	(Stroke/3.6) + 7.5
ø63	45	47	48	22	36	49	63	90	119	146	(Stroke/3.6) + 7.5
ø80	58.5	53	55	14	26	38	49	72	96	119	(Stroke/4.3) + 2.5
ø100	69.5	61	65	20	32	42	53	76	98	120	(Stroke/4.5) + 9

Code / Bore size (mm)	With switch															
	O	T0,T5,T2,T3			T1,T2Y,T3Y,T2J T2YD/T			T8			T2W,T3W			H0*		
		P	RD	HD	P	RD	HD	P	RD	HD	P	RD	HD	P	RD	HD
ø40	66	41.5	11	11	41.5	10	10	41.5	5	5	40	13	13	42	4	4
ø50	73	43	13	13	43	12	12	43	7	7	44.5	15	15	44	6	6
ø63	85	47	13	13	47	12	12	47	7	7	50	15	15	47	6	6
ø80	105	57	14.5	14.5	57	13.5	13.5	57	8.5	8.5	60	16.5	16.5	58	7.5	7.5
ø100	121	63	18.5	18.5	63	17.5	17.5	63	12.5	12.5	68	20.5	20.5	64	11.5	11.5

*1 : Round up to the nearest whole number.
*2 : Ⓡ, Ⓢ and Ⓣ indicate the cushion needle position.
*3 : For the dimensions of the accessories, refer to page 923.
*4 : Non-sag block (2-dashed line) will be added depending on the stroke. Refer to page 922.
RD: Rod side max. sensitivity position
HD: Head side max. sensitivity position

Dimensions

● Axial foot (LB)

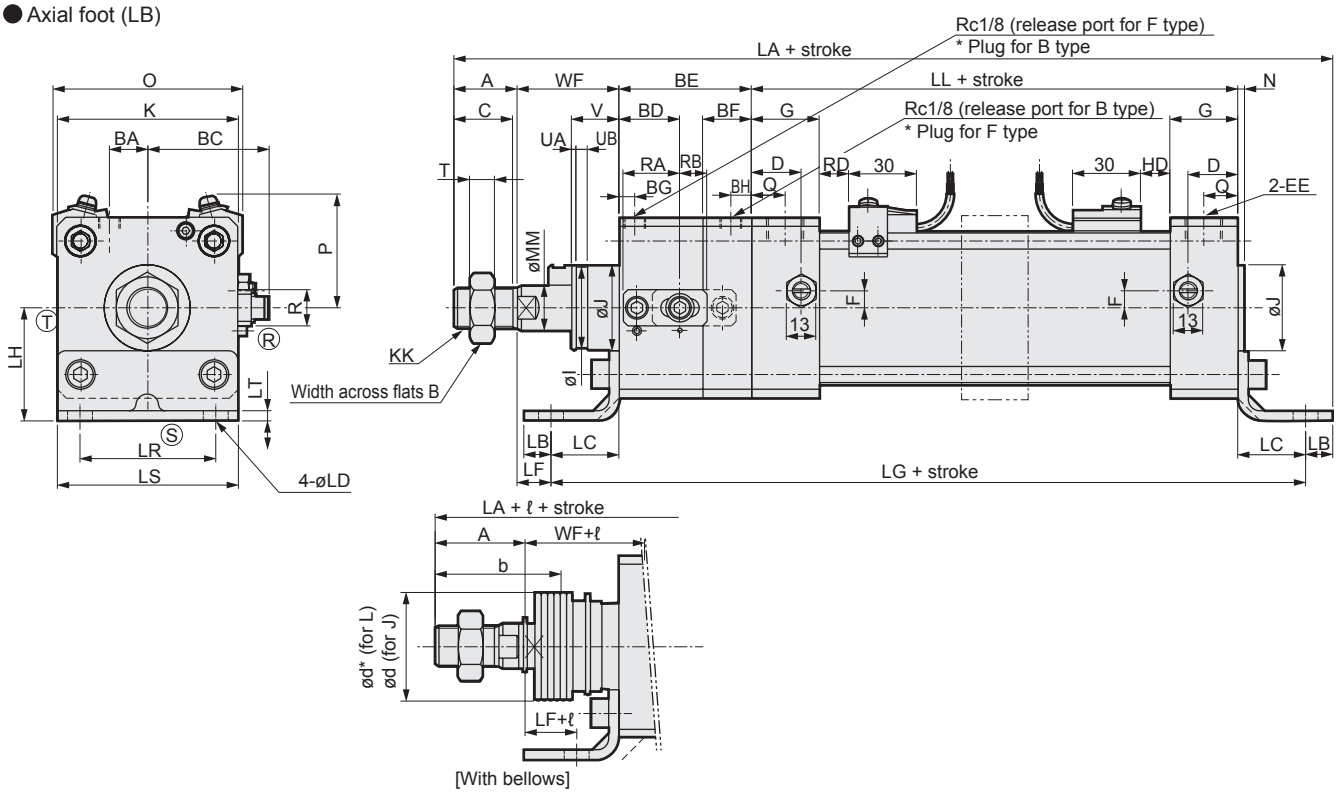

Code / Bore size	Axial foot (LB) basic dimensions																			
	A	B	C	BA	BC	BD	BE	BF	BG	BH	D	EE	F	G	J	K	KK	LL	MM	N
ø40	22	22	20	7.5	39.5	22	47	18	7	7	18	Rc1/4	7.5	26	31	57	M14x1.5	93	16	2
ø50	28	27	26	10	43.5	25	54	20	7	8	20	Rc3/8	0	28	38	66	M18x1.5	101	20	2.5
ø63	28	27	26	17	53.5	26.8	58.5	21.5	7	9	22	Rc3/8	0	30	38	80	M18x1.5	105	20	3
ø80	36	32	34	21	62.5	33.3	71	25	8	10	26	Rc1/2	0	34	43	98	M22x1.5	116	25	3.5
ø100	45	41	43	25	72.5	38	81.5	28.5	8	10.5	28	Rc1/2	0	36	51	118	M26x1.5	128	30	4

Code / Bore size	Q	T	V	R	RA	RB	I	UA	UB	WF	X	Mounting dimensions									
												LA	LB	LC	LD	LF	LG	LH	LR	LS	LT
ø40	13	8	18.5	16	18	10	29	2	5	33.5	197.5	225	10	19.5	9	14	179	40	40	57	3.2
ø50	14	11	20.5	16	18	10	36	2	5	37	222.5	254	12	22	9	15	199	40	46	66	4.5
ø63	15	11	21	16	25	12	36	2	5	35	229.5	268.5	12	30	11	5	223.5	50	60	80	4.5
ø80	17	13	23.5	16	25	12	41	2	5	48	274.5	322	14	37	14	11	261	60	74	98	6
ø100	18	16	32	16	25	12	49	3	6	53	311.5	359.5	21	31	14	22	271.5	67	80	118	6

Code / Bore size	With bellows										
	b	d	d*	ℓ							
				50 or less	Over 50 to 100	Over 100 to 150	Over 150 to 200	Over 200 to 300	Over 300 to 400	Over 400 to 500	Over 500 *1
ø40	41	40	40	25.5	41.5	58.5	75.5	108.5	141.5	174.5	(Stroke/3.0) + 8
ø50	47	47	48	22	36	49	63	90	119	146	(Stroke/3.6) + 7.5
ø63	45	47	48	22	36	49	63	90	119	146	(Stroke/3.6) + 7.5
ø80	58.5	53	55	14	26	38	49	72	96	119	(Stroke/4.3) + 2.5
ø100	69.5	61	65	20	32	42	53	76	98	120	(Stroke/4.5) + 9

Code / Bore size (mm)	With switch															
	O	T0,T5,T2,T3			T1,T2Y,T3Y,T2J T2YD/T			T8			T2W,T3W			H0*		
		P	RD	HD	P	RD	HD	P	RD	HD	P	RD	HD	P	RD	HD
ø40	66	41.5	11	11	41.5	10	10	41.5	5	5	40	13	13	42	4	4
ø50	73	43	13	13	43	12	12	43	7	7	44.5	15	15	44	6	6
ø63	85	47	13	13	47	12	12	47	7	7	50	15	15	47	6	6
ø80	105	57	14.5	14.5	57	13.5	13.5	57	8.5	8.5	60	16.5	16.5	58	7.5	7.5
ø100	121	63	18.5	18.5	63	17.5	17.5	63	12.5	12.5	68	20.5	20.5	64	11.5	11.5

*1 : Round up to the nearest whole number.
*2 : Ⓡ, Ⓢ and Ⓣ indicate the cushion needle position.
*3 : For the dimensions of the accessories, refer to page 923.
*4 : Non-sag block (2-dashed line) will be added depending on the stroke. Refer to page 922.
RD: Rod side max. sensitivity position
HD: Head side max. sensitivity position

LCM
LCR
LCG
LCW
LCX
STM
STG
STS/STL
STR2
UCA2
ULK*
JSK/M2
JSG
JSC3/JSC4
USSD
UFCD
USC
UB
JSB3
LMB
LML
HCM
HCA
LBC
CAC4
UCAC2
CAC-N
UCAC-N
RCS2
RCC2
PCC
SHC
MCP
GLC
MFC
BBS
RRC
GRC
RV3*
NHS
HRL
LN
Hand
Chuk
MecHnd/Chuk
ShkAbs
FJ
FK
SpdContr
Ending

Dimensions CAD

● Rod side flange (FA)

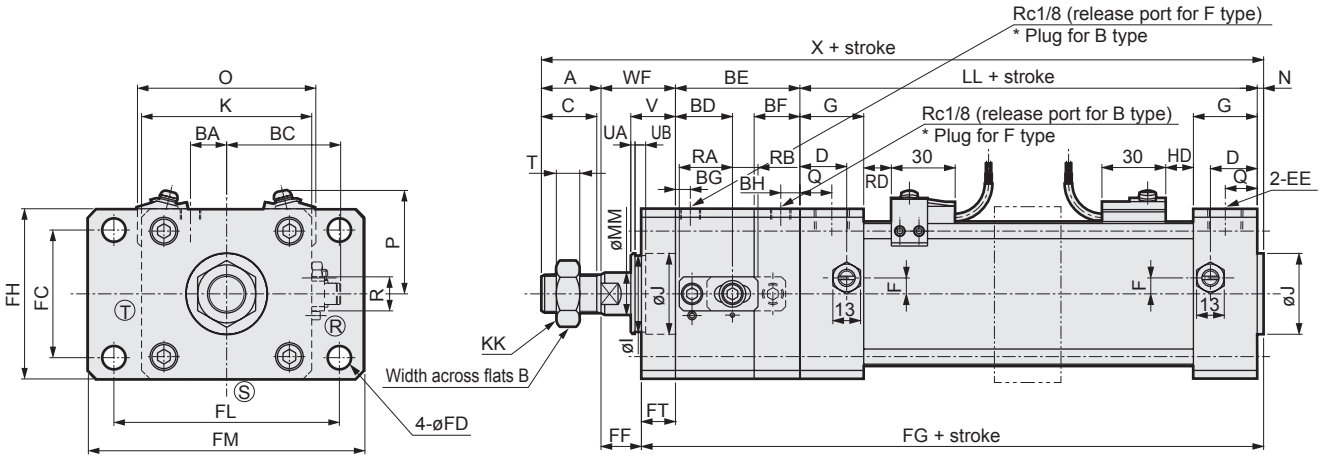

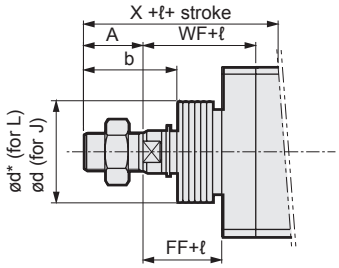

[With bellows]

Code / Bore size	Rod side flange (FA) basic dimensions																			
	A	B	C	BA	BC	BD	BE	BF	BG	BH	D	EE	F	G	J	K	KK	LL	MM	N
ø40	22	22	20	7.5	39.5	22	47	18	7	7	18	Rc1/4	7.5	26	31	57	M14x1.5	93	16	2
ø50	28	27	26	10	43.5	25	54	20	7	8	20	Rc3/8	0	28	38	66	M18x1.5	101	20	2.5
ø63	28	27	26	17	53.5	26.8	58.5	21.5	7	9	22	Rc3/8	0	30	38	80	M18x1.5	105	20	3
ø80	36	32	34	21	62.5	33.3	71	25	8	10	26	Rc1/2	0	34	43	98	M22x1.5	116	25	3.5
ø100	45	41	43	25	72.5	38	81.5	28.5	8	10.5	28	Rc1/2	0	36	51	118	M26x1.5	128	30	4

Code / Bore size	Q	T	V	R	RA	RB	I	UA	UB	WF	X	Mounting dimensions							
												FC	FD	FF	FG	FH	FL	FM	FT
ø40	13	8	18.5	16	18	10	29	2	5	33.5	197.5	40	9	21.5	154	57	80	100	12
ø50	14	11	20.5	16	18	10	36	2	5	37	222.5	47	9	25	169.5	65	85	108	12
ø63	15	11	21	16	25	12	36	2	5	35	229.5	60	11	19	182.5	80	106	130	16
ø80	17	13	23.5	16	25	12	41	2	5	48	274.5	74	14	29	209.5	98	125	153	19
ø100	18	16	32	16	25	12	49	3	6	53	311.5	88	14	34	232.5	118	144	180	19

Code / Bore size	With bellows										
	b	d	d*	ℓ							
				50 or less	Over 50 to 100	Over 100 to 150	Over 150 to 200	Over 200 to 300	Over 300 to 400	Over 400 to 500	Over 500 *1
ø40	41	40	40	25.5	41.5	58.5	75.5	108.5	141.5	174.5	(Stroke/3.0) + 8
ø50	47	47	48	22	36	49	63	90	119	146	(Stroke/3.6) + 7.5
ø63	45	47	48	22	36	49	63	90	119	146	(Stroke/3.6) + 7.5
ø80	58.5	53	55	14	26	38	49	72	96	119	(Stroke/4.3) + 2.5
ø100	69.5	61	65	20	32	42	53	76	98	120	(Stroke/4.5) + 9

Code / Bore size (mm)	With switch															
	O	T0,T5,T2,T3			T1,T2Y,T3Y,T2J T2YD/T			T8			T2W,T3W			H0*		
		P	RD	HD	P	RD	HD	P	RD	HD	P	RD	HD	P	RD	HD
ø40	66	41.5	11	11	41.5	10	10	41.5	5	5	40	13	13	42	4	4
ø50	73	43	13	13	43	12	12	43	7	7	44.5	15	15	44	6	6
ø63	85	47	13	13	47	12	12	47	7	7	50	15	15	47	6	6
ø80	105	57	14.5	14.5	57	13.5	13.5	57	8.5	8.5	60	16.5	16.5	58	7.5	7.5
ø100	121	63	18.5	18.5	63	17.5	17.5	63	12.5	12.5	68	20.5	20.5	64	11.5	11.5

*1 : Round up to the nearest whole number.
*2 : Ⓡ, Ⓢ and Ⓣ indicate the cushion needle position.
*3 : For the dimensions of the accessories, refer to page 923.
*4 : Non-sag block (2-dashed line) will be added depending on the stroke. Refer to page 922.
RD: Rod side max. sensitivity position
HD: Head side max. sensitivity position

Dimensions

● Head side flange (FB)

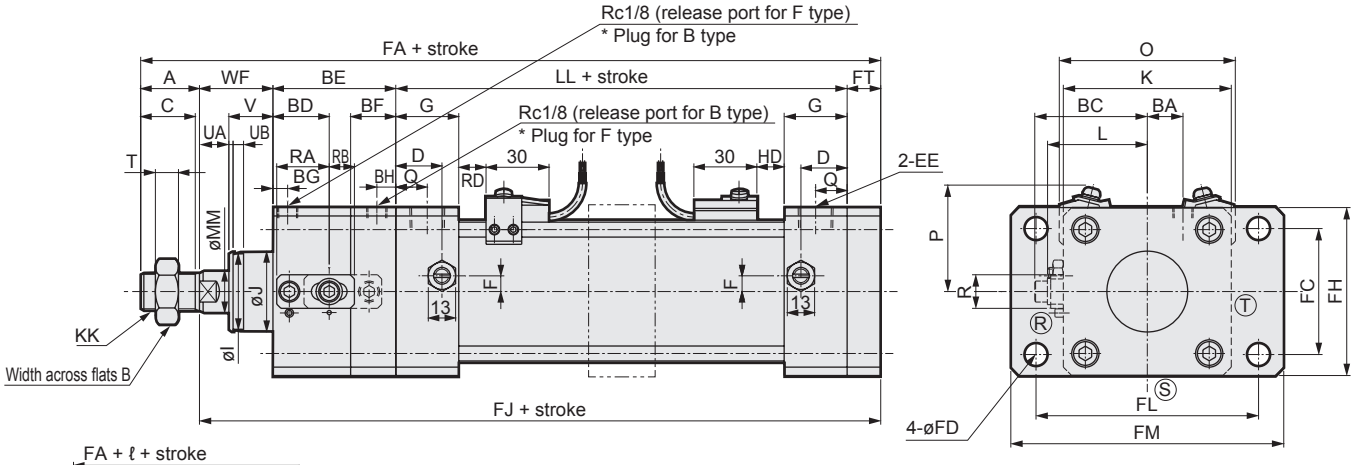

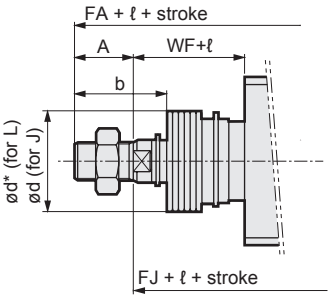

[With bellows]

Code / Bore size	Head side flange (FB) basic dimensions																		
	A	B	C	BA	BC	BD	BE	BF	BG	BH	D	EE	F	G	J	K	KK	LL	MM
ø40	22	22	20	7.5	39.5	22	47	18	7	7	18	Rc1/4	7.5	26	31	57	M14x1.5	93	16
ø50	28	27	26	10	43.5	25	54	20	7	8	20	Rc3/8	0	28	38	66	M18x1.5	101	20
ø63	28	27	26	17	53.5	26.8	58.5	21.5	7	9	22	Rc3/8	0	30	38	80	M18x1.5	105	20
ø80	36	32	34	21	62.5	33.3	71	25	8	10	26	Rc1/2	0	34	43	98	M22x1.5	116	25
ø100	45	41	43	25	72.5	38	81.5	28.5	8	10.5	28	Rc1/2	0	36	51	118	M26x1.5	128	30

Code / Bore size	Q	T	V	R	RA	RB	I	UA	UB	WF	X	Mounting dimensions								
												L	FA	FC	FD	FH	FJ	FL	FM	FT
ø40	13	8	18.5	16	18	10	29	2	5	33.5	197.5	38 to 39.5	207.5	40	9	57	185.5	80	100	12
ø50	14	11	20.5	16	18	10	36	2	5	37	222.5	41 to 43.5	232	47	9	65	204	85	108	12
ø63	15	11	21	16	25	12	36	2	5	35	229.5	47.5 to 50	242.5	60	11	80	214.5	106	130	16
ø80	17	13	23.5	16	25	12	41	2	5	48	274.5	56 to 59	290	74	14	98	254	125	153	19
ø100	18	16	32	16	25	12	49	3	6	53	311.5	66 to 69	326.5	88	14	118	281.5	144	180	19

Code / Bore size	With bellows										
	b	d	d*	ℓ							
				50 or less	Over 50 to 100	Over 100 to 150	Over 150 to 200	Over 200 to 300	Over 300 to 400	Over 400 to 500	Over 500 *1
ø40	41	40	40	25.5	41.5	58.5	75.5	108.5	141.5	174.5	(Stroke/3.0) + 8
ø50	47	47	48	22	36	49	63	90	119	146	(Stroke/3.6) + 7.5
ø63	45	47	48	22	36	49	63	90	119	146	(Stroke/3.6) + 7.5
ø80	58.5	53	55	14	26	38	49	72	96	119	(Stroke/4.3) + 2.5
ø100	69.5	61	65	20	32	42	53	76	98	120	(Stroke/4.5) + 9

Code / Bore size (mm)	With switch															
	O	T0,T5,T2,T3			T1,T2Y,T3Y,T2J T2YD/T			T8			T2W,T3W			H0*		
		P	RD	HD	P	RD	HD	P	RD	HD	P	RD	HD	P	RD	HD
ø40	66	41.5	11	11	41.5	10	10	41.5	5	5	40	13	13	42	4	4
ø50	73	43	13	13	43	12	12	43	7	7	44.5	15	15	44	6	6
ø63	85	47	13	13	47	12	12	47	7	7	50	15	15	47	6	6
ø80	105	57	14.5	14.5	57	13.5	13.5	57	8.5	8.5	60	16.5	16.5	58	7.5	7.5
ø100	121	63	18.5	18.5	63	17.5	17.5	63	12.5	12.5	68	20.5	20.5	64	11.5	11.5

*1 : Round up to the nearest whole number.
*2 : Ⓡ, Ⓢ and Ⓣ indicate the cushion needle position.
*3 : For the dimensions of the accessories, refer to page 923.
*4 : Non-sag block (2-dashed line) will be added depending on the stroke. Refer to page 922.
RD: Rod side max. sensitivity position
HD: Head side max. sensitivity position

LCM
LCR
LCG
LCW
LCX
STM
STG
STS/STL
STR2
UCA2
ULK*
JSK/M2
JSG
JSC3/JSC4
USSD
UFCD
USC
UB
JSB3
LMB
LML
HCM
HCA
LBC
CAC4
UCAC2
CAC-N
UCAC-N
RCS2
RCC2
PCC
SHC
MCP
GLC
MFC
BBS
RRC
GRC
RV3*
NHS
HRL
LN
Hand
Chuk
MecHnd/Chuk
ShkAbs
FJ
FK
SpdContr
Ending

Dimensions

● Head side special flange (FC)

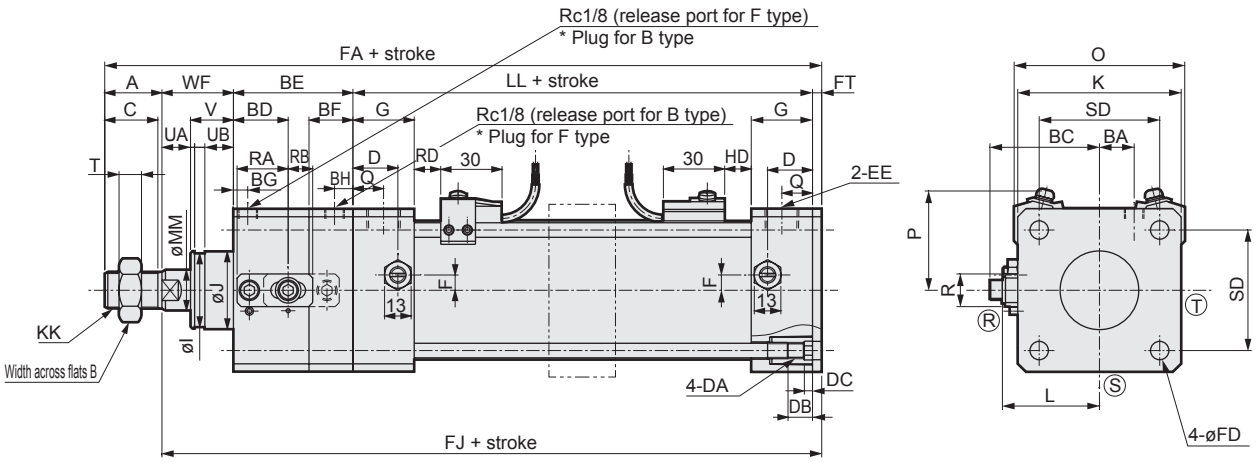

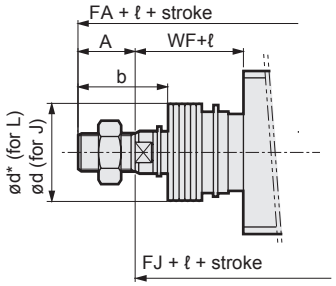

[With bellows]

Code / Bore size	Head side special flange (FC) basic dimensions																			
	A	B	C	BA	BC	BD	BE	BF	BG	BH	D	DA	DB	DC	EE	F	G	J	K	KK
ø40	22	22	20	7.5	39.5	22	47	18	7	7	18	M8	12	4	Rc1/4	7.5	26	31	57	M14x1.5
ø50	28	27	26	10	43.5	25	54	20	7	8	20	M8	12	4	Rc3/8	0	28	38	66	M18x1.5
ø63	28	27	26	17	53.5	26.8	58.5	21.5	7	9	22	M8	12	4	Rc3/8	0	30	38	80	M18x1.5
ø80	36	32	34	21	62.5	33.3	71	25	8	10	26	M12	16	5	Rc1/2	0	34	43	98	M22x1.5
ø100	45	41	43	25	72.5	38	81.5	28.5	8	10.5	28	M12	16	5	Rc1/2	0	36	51	118	M26x1.5

Code / Bore size	LL	MM	Q	SD	T	V	R	RA	RB	I	UA	UB	WF	X	Mounting dimensions				
															L	FA	FD	FJ	FT
ø40	93	16	13	40.5	8	18.5	16	18	10	29	2	5	33.5	197.5	38 to 39.5	200	9	178	4.5
ø50	101	20	14	48	11	20.5	16	18	10	36	2	5	37	222.5	41 to 43.5	224.5	9	196.5	4.5
ø63	105	20	15	59	11	21	16	25	12	36	2	5	35	229.5	47.5 to 50	231	11	203	4.5
ø80	116	25	17	74	13	23.5	16	25	12	41	2	5	48	274.5	56 to 59	277	14	241	6
ø100	128	30	18	90	16	32	16	25	12	49	3	6	53	311.5	66 to 69	313.5	14	268.5	6

Code / Bore size	With bellows									
	b	d	d*	ℓ						
				50 or less	Over 50 to 100	Over 100 to 150	Over 150 to 200	Over 200 to 300	Over 300 to 400	Over 400 to 500	Over 500 *1
ø40	41	40	40	25.5	41.5	58.5	75.5	108.5	141.5	174.5	(Stroke/3.0) + 8
ø50	47	47	48	22	36	49	63	90	119	146	(Stroke/3.6) + 7.5
ø63	45	47	48	22	36	49	63	90	119	146	(Stroke/3.6) + 7.5
ø80	58.5	53	55	14	26	38	49	72	96	119	(Stroke/4.3) + 2.5
ø100	69.5	61	65	20	32	42	53	76	98	120	(Stroke/4.5) + 9

Code / Bore size (mm)	With switch															
	O	T0,T5,T2,T3			T1,T2Y,T3Y,T2J T2YD/T			T8			T2W,T3W			H0*		
		P	RD	HD	P	RD	HD	P	RD	HD	P	RD	HD	P	RD	HD
ø40	66	41.5	11	11	41.5	10	10	41.5	5	5	40	13	13	42	4	4
ø50	73	43	13	13	43	12	12	43	7	7	44.5	15	15	44	6	6
ø63	85	47	13	13	47	12	12	47	7	7	50	15	15	47	6	6
ø80	105	57	14.5	14.5	57	13.5	13.5	57	8.5	8.5	60	16.5	16.5	58	7.5	7.5
ø100	121	63	18.5	18.5	63	17.5	17.5	63	12.5	12.5	68	20.5	20.5	64	11.5	11.5

*1 : Round up to the nearest whole number.
*2 : Ⓡ, Ⓢ and Ⓣ indicate the cushion needle position.
*3 : For the dimensions of the accessories, refer to page 923.
*4 : Non-sag block (2-dashed line) will be added depending on the stroke. Refer to page 922.
RD: Rod side max. sensitivity position
HD: Head side max. sensitivity position

Dimensions

● Eye bracket (CA)

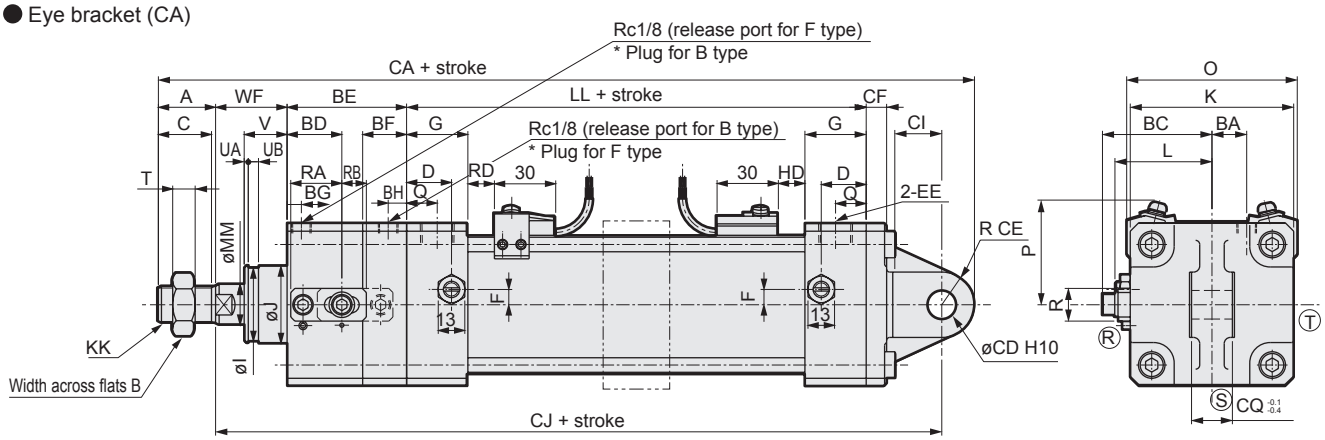

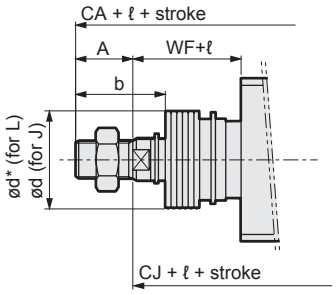

[With bellows]

Code / Bore size	Eye bracket (CA) basic dimensions																		
	A	B	C	BA	BC	BD	BE	BF	BG	BH	D	EE	F	G	J	K	KK	LL	MM
ø40	22	22	20	7.5	39.5	22	47	18	7	7	18	Rc1/4	7.5	26	31	57	M14x1.5	93	16
ø50	28	27	26	10	43.5	25	54	20	7	8	20	Rc3/8	0	28	38	66	M18x1.5	101	20
ø63	28	27	26	17	53.5	26.8	58.5	21.5	7	9	22	Rc3/8	0	30	38	80	M18x1.5	105	20
ø80	36	32	34	21	62.5	33.3	71	25	8	10	26	Rc1/2	0	34	43	98	M22x1.5	116	25
ø100	45	41	43	25	72.5	38	81.5	28.5	8	10.5	28	Rc1/2	0	36	51	118	M26x1.5	128	30

Code / Bore size	Q	T	V	R	RA	RB	I	UA	UB	WF	Mounting dimensions							
											L	CA	CD	CE	CF	CI	CJ	CQ
ø40	13	8	18.5	16	18	10	29	2	5	33.5	38 to 39.5	239.5	12 $^{+0.070}_{0}$	12	10	18	205.5	18
ø50	14	11	20.5	16	18	10	36	2	5	37	41 to 43.5	264	12 $^{+0.070}_{0}$	12	10	18	224	18
ø63	15	11	21	16	25	12	36	2	5	35	47.5 to 50	279.5	14 $^{+0.070}_{0}$	16	10	24	235.5	20
ø80	17	13	23.5	16	25	12	41	2	5	48	56 to 59	343	20 $^{+0.084}_{0}$	20	14	30	287	28
ø100	18	16	32	16	25	12	49	3	6	53	66 to 69	379.5	20 $^{+0.084}_{0}$	20	16	30	314.5	28

Code / Bore size	With bellows									
	b	d	d*	ℓ						
				50 or less	Over 50 to 100	Over 100 to 150	Over 150 to 200	Over 200 to 300	Over 300 to 400	Over 400 to 500	Over 500 *1
ø40	41	40	40	25.5	41.5	58.5	75.5	108.5	141.5	174.5	(Stroke/3.0) + 8
ø50	47	47	48	22	36	49	63	90	119	146	(Stroke/3.6) + 7.5
ø63	45	47	48	22	36	49	63	90	119	146	(Stroke/3.6) + 7.5
ø80	58.5	53	55	14	26	38	49	72	96	119	(Stroke/4.3) + 2.5
ø100	69.5	61	65	20	32	42	53	76	98	120	(Stroke/4.5) + 9

Code / Bore size (mm)	With switch															
	O	T0,T5,T2,T3			T1,T2Y,T3Y,T2J T2YD/T			T8			T2W,T3W			H0*		
		P	RD	HD	P	RD	HD	P	RD	HD	P	RD	HD	P	RD	HD
ø40	66	41.5	11	11	41.5	10	10	41.5	5	5	40	13	13	42	4	4
ø50	73	43	13	13	43	12	12	43	7	7	44.5	15	15	44	6	6
ø63	85	47	13	13	47	12	12	47	7	7	50	15	15	47	6	6
ø80	105	57	14.5	14.5	57	13.5	13.5	57	8.5	8.5	60	16.5	16.5	58	7.5	7.5
ø100	121	63	18.5	18.5	63	17.5	17.5	63	12.5	12.5	68	20.5	20.5	64	11.5	11.5

*1 : Round up to the nearest whole number.
*2 : Ⓡ, Ⓢ and Ⓣ indicate the cushion needle position.
*3 : For the dimensions of the accessories, refer to page 923.
*4 : Non-sag block (2-dashed line) will be added depending on the stroke. Refer to page 922.
RD: Rod side max. sensitivity position
HD: Head side max. sensitivity position

LCM
LCR
LCG
LCW
LCX
STM
STG
STS/STL
STR2
UCA2
ULK*
JSK/M2
JSG
JSC3/JSC4
USSD
UFCD
USC
UB
JSB3
LMB
LML
HCM
HCA
LBC
CAC4
UCAC2
CAC-N
UCAC-N
RCS2
RCC2
PCC
SHC
MCP
GLC
MFC
BBS
RRC
GRC
RV3*
NHS
HRL
LN
Hand
Chuk
MecHnd/Chuk
ShkAbs
FJ
FK
SpdContr
Ending

Dimensions

● Clevis bracket (CB)

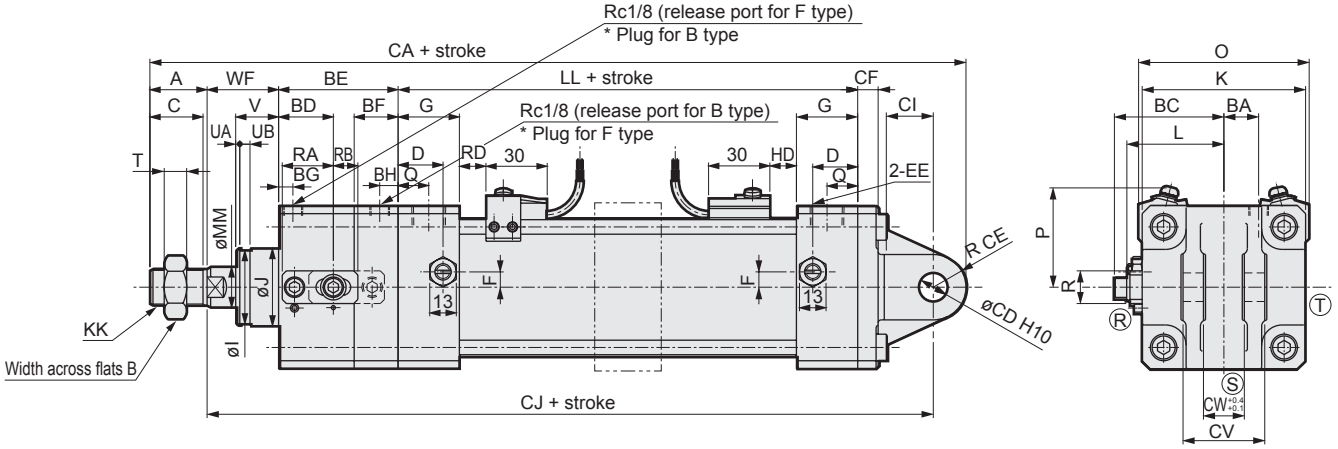

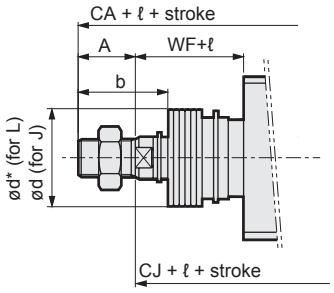

[With bellows]

Code / Bore size	Clevis bracket (CB) basic dimensions																		
	A	B	C	BA	BC	BD	BE	BF	BG	BH	D	EE	F	G	J	K	KK	LL	MM
ø40	22	22	20	7.5	39.5	22	47	18	7	7	18	Rc1/4	7.5	26	31	57	M14x1.5	93	16
ø50	28	27	26	10	43.5	25	54	20	7	8	20	Rc3/8	0	28	38	66	M18x1.5	101	20
ø63	28	27	26	17	53.5	26.8	58.5	21.5	7	9	22	Rc3/8	0	30	38	80	M18x1.5	105	20
ø80	36	32	34	21	62.5	33.3	71	25	8	10	26	Rc1/2	0	34	43	98	M22x1.5	116	25
ø100	45	41	43	25	72.5	38	81.5	28.5	8	10.5	28	Rc1/2	0	36	51	118	M26x1.5	128	30

Code / Bore size	Q	T	V	R	RA	RB	I	UA	UB	WF	Mounting dimensions								
											L	CA	CD	CE	CF	CI	CJ	CV	CW
ø40	13	8	18.5	16	18	10	29	2	5	33.5	38 to 39.5	239.5	12 $^{+0.070}_{0}$	12	10	18	205.5	36	18
ø50	14	11	20.5	16	18	10	36	2	5	37	41 to 43.5	264	12 $^{+0.070}_{0}$	12	10	18	224	36	18
ø63	15	11	21	16	25	12	36	2	5	35	47.5 to 50	279.5	14 $^{+0.070}_{0}$	16	10	24	235.5	40	20
ø80	17	13	23.5	16	25	12	41	2	5	48	56 to 59	343	20 $^{+0.084}_{0}$	20	14	30	287	56	28
ø100	18	16	32	16	25	12	49	3	6	53	66 to 69	379.5	20 $^{+0.084}_{0}$	20	16	30	314.5	56	28

Code / Bore size	With bellows										
	b	d	d*	ℓ							
				50 or less	Over 50 to 100	Over 100 to 150	Over 150 to 200	Over 200 to 300	Over 300 to 400	Over 400 to 500	Over 500 *1
ø40	41	40	40	25.5	41.5	58.5	75.5	108.5	141.5	174.5	(Stroke/3.0) + 8
ø50	47	47	48	22	36	49	63	90	119	146	(Stroke/3.6) + 7.5
ø63	45	47	48	22	36	49	63	90	119	146	(Stroke/3.6) + 7.5
ø80	58.5	53	55	14	26	38	49	72	96	119	(Stroke/4.3) + 2.5
ø100	69.5	61	65	20	32	42	53	76	98	120	(Stroke/4.5) + 9

Code / Bore size (mm)	With switch															
	O	T0,T5,T2,T3			T1,T2Y,T3Y,T2J T2YD/T			T8			T2W,T3W			H0*		
		P	RD	HD	P	RD	HD	P	RD	HD	P	RD	HD	P	RD	HD
ø40	66	41.5	11	11	41.5	10	10	41.5	5	5	40	13	13	42	4	4
ø50	73	43	13	13	43	12	12	43	7	7	44.5	15	15	44	6	6
ø63	85	47	13	13	47	12	12	47	7	7	50	15	15	47	6	6
ø80	105	57	14.5	14.5	57	13.5	13.5	57	8.5	8.5	60	16.5	16.5	58	7.5	7.5
ø100	121	63	18.5	18.5	63	17.5	17.5	63	12.5	12.5	68	20.5	20.5	64	11.5	11.5

*1 : Round up to the nearest whole number.
*2 : Ⓡ, Ⓢ and Ⓣ indicate the cushion needle position.
*3 : For the dimensions of the accessories, refer to page 923.
*4 : Non-sag block (2-dashed line) will be added depending on the stroke. Refer to page 922.
RD: Rod side max. sensitivity position
HD: Head side max. sensitivity position

LCM
LCR
LCG
LCW
LCX
STM
STG
STS/STL
STR2
UCA2
ULK*
JSK/M2
JSG
JSC3/JSC4
USSD
UFCD
USC
UB
JSB3
LMB
LML
HCM
HCA
LBC
CAC4
UCAC2
CAC-N
UCAC-N
RCS2
RCC2
PCC
SHC
MCP
GLC
MFC
BBS
RRC
GRC
RV3*
NHS
HRL
LN
Hand
Chuk
MecHnd/Chuk
ShkAbs
FJ
FK
SpdContr
Ending

Dimensions

CAD

● Intermediate trunnion (TC)

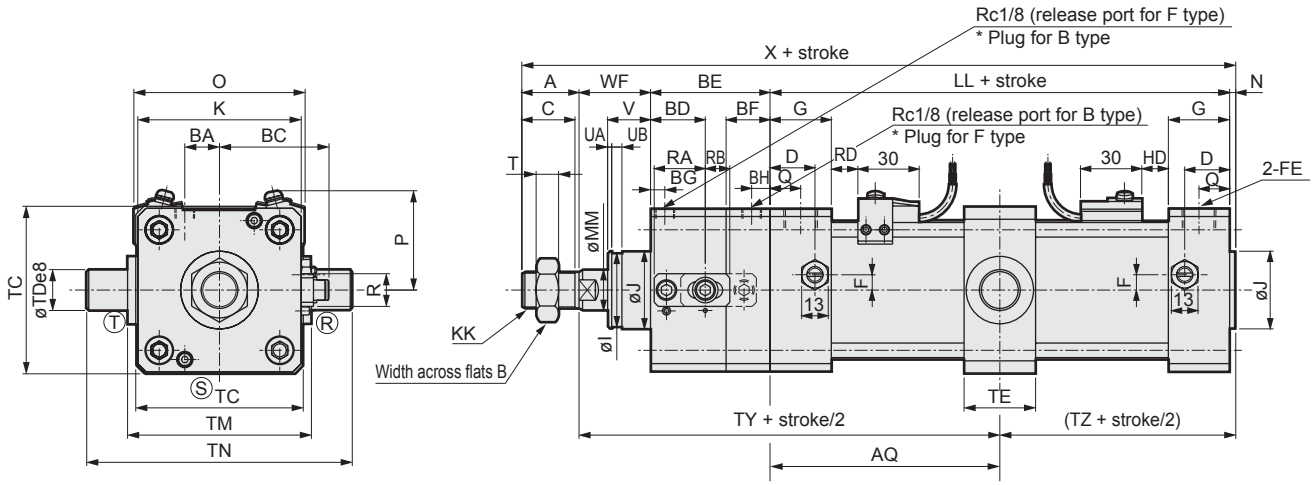

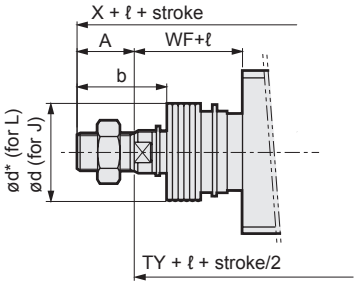

[With bellows]

Code / Bore size	Intermediate trunnion (TC) basic dimensions																			
	A	B	C	BA	BC	BD	BE	BF	BG	BH	D	EE	F	G	J	K	KK	LL	MM	N
ø40	22	22	20	7.5	39.5	22	47	18	7	7	18	Rc1/4	7.5	26	31	57	M14x1.5	93	16	2
ø50	28	27	26	10	43.5	25	54	20	7	8	20	Rc3/8	0	28	38	66	M18x1.5	101	20	2.5
ø63	28	27	26	17	53.5	26.8	58.5	21.5	7	9	22	Rc3/8	0	30	38	80	M18x1.5	105	20	3
ø80	36	32	34	21	62.5	33.3	71	25	8	10	26	Rc1/2	0	34	43	98	M22x1.5	116	25	3.5
ø100	45	41	43	25	72.5	38	81.5	28.5	8	10.5	28	Rc1/2	0	36	51	118	M26x1.5	128	30	4

Code / Bore size	Q	T	V	R	RA	RB	I	UA	UB	WF	X	AQ	Mounting dimensions						
													TC	TD	TE	TM	TN	TY	TZ
ø40	13	8	18.5	16	18	10	29	2	5	33.5	197.5	46.5+ Stroke/2	57	16 -0.032 -0.059	30	63	95	127	48.5
ø50	14	11	20.5	16	18	10	36	2	5	37	222.5	50.5+ Stroke/2	67	18 -0.032 -0.059	30	80	116	141.5	53
ø63	15	11	21	16	25	12	36	2	5	35	229.5	52.5+ Stroke/2	82	20 -0.040 -0.073	35	90	130	146	55.5
ø80	17	13	23.5	16	25	12	41	2	5	48	274.5	58+ Stroke/2	100	25 -0.040 -0.073	40	115	165	177	61.5
ø100	18	16	32	16	25	12	49	3	6	53	311.5	64+ Stroke/2	121	35 -0.050 -0.089	50	135	205	198.5	68

Code / Bore size	With bellows									
	b	d	d*	ℓ						
				50 or less	Over 50 to 100	Over 100 to 150	Over 150 to 200	Over 200 to 300	Over 300 to 400	Over 400 to 500	Over 500 *1
ø40	41	40	40	25.5	41.5	58.5	75.5	108.5	141.5	174.5	(Stroke/3.0) + 8
ø50	47	47	48	22	36	49	63	90	119	146	(Stroke/3.6) + 7.5
ø63	45	47	48	22	36	49	63	90	119	146	(Stroke/3.6) + 7.5
ø80	58.5	53	55	14	26	38	49	72	96	119	(Stroke/4.3) + 2.5
ø100	69.5	61	65	20	32	42	53	76	98	120	(Stroke/4.5) + 9

Code / Bore size (mm)	With switch															
	O	T0,T5,T2,T3			T1,T2Y,T3Y,T2J T2YD/T			T8			T2W,T3W			H0*		
		P	RD	HD	P	RD	HD	P	RD	HD	P	RD	HD	P	RD	HD
ø40	66	41.5	11	11	41.5	10	10	41.5	5	5	40	13	13	42	4	4
ø50	73	43	13	13	43	12	12	43	7	7	44.5	15	15	44	6	6
ø63	85	47	13	13	47	12	12	47	7	7	50	15	15	47	6	6
ø80	105	57	14.5	14.5	57	13.5	13.5	57	8.5	8.5	60	16.5	16.5	58	7.5	7.5
ø100	121	63	18.5	18.5	63	17.5	17.5	63	12.5	12.5	68	20.5	20.5	64	11.5	11.5

*1 : Round up to the nearest whole number.
*2 : Ⓡ, Ⓢ and Ⓣ indicate the cushion needle position.
*3 : For the dimensions of the accessories, refer to page 923.
RD: Rod side max. sensitivity position
HD: Head side max. sensitivity position

LCM
LCR
LCG
LCW
LCX
STM
STG
STS/STL
STR2
UCA2
ULK*
JSK/M2
JSG
JSC3/JSC4
USSD
UFCD
USC
UB
JSB3
LMB
LML
HCM
HCA
LBC
CAC4
UCAC2
CAC-N
UCAC-N
RCS2
RCC2
PCC
SHC
MCP
GLC
MFC
BBS
RRC
GRC
RV3*
NHS
HRL
LN
Hand
Chuk
MecHnd/Chuk
ShkAbs
FJ
FK
SpdContr
Ending

dimensions

● Rod side trunnion (TA)

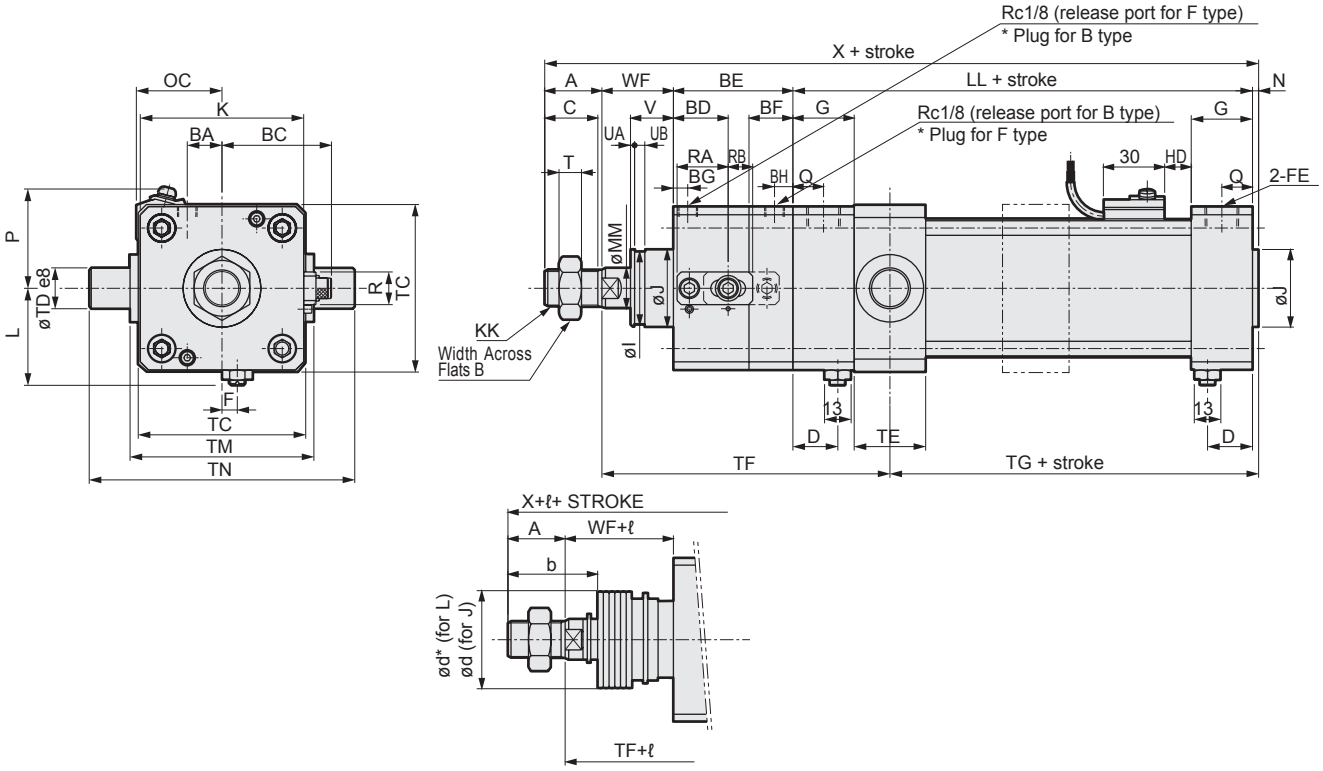

[With bellows]

Code / Bore size	Rod trunnion (TA) basic dimensions																			
	A	B	C	BA	BC	BD	BE	BF	BG	BH	D	EE	F	G	J	K	KK	LL	MM	N
ø40	22	22	20	7.5	39.5	22	47	18	7	7	18	Rc1/4	7.5	26	31	57	M 14 x 1.5	93	16	2
ø50	28	27	26	10	43.5	25	54	20	7	8	20	Rc3/8	0	28	38	66	M 18 x 1.5	101	20	2.5
ø63	28	27	26	17	53.5	26.8	58.5	21.5	7	9	22	Rc3/8	0	30	38	80	M 18 x 1.5	105	20	3
ø80	36	32	34	21	62.5	33.3	71	25	8	10	26	Rc1/2	0	34	43	98	M 22 x 1.5	116	25	3.5
ø100	45	41	43	25	72.5	38	81.5	28.5	8	10.5	28	Rc1/2	0	36	51	118	M 26 x 1.5	128	30	4

Code / Bore size	Q	T	V	R	RA	RB	I	UA	UB	WF	X	Mounting dimensions							
												L	TC	TD	TE	TF	TG	TM	TN
ø40	13	8	18.5	16	18	10	29	2	5	33.5	197.5	38 to 39.5	57	16 $^{-0.032}_{-0.059}$	30	121.5	54	63	95
ø50	14	11	20.5	16	18	10	36	2	5	37	222.5	41 to 43.5	67	18 $^{-0.032}_{-0.059}$	30	134	60.5	80	116
ø63	15	11	21	16	25	12	36	2	5	35	229.5	47.5 to 50	82	20 $^{-0.040}_{-0.073}$	35	141	60.5	90	130
ø80	17	13	23.5	16	25	12	41	2	5	48	274.5	56 to 59	100	25 $^{-0.040}_{-0.073}$	40	173	65.5	115	165
ø100	18	16	32	16	25	12	49	3	6	53	311.5	66 to 69	121	35 $^{-0.050}_{-0.089}$	50	195.5	71	135	205

Code / Bore size	With bellows									
	b	d	d*	ℓ						
				50 or less	Over 50 to 100	Over 100 to 150	Over 150 to 200	Over 200 to 300	Over 300 to 400	Over 400 to 500	Over 500*1
ø40	41	40	40	25.5	41.5	58.5	75.5	108.5	141.5	174.5	(stroke/3.0) + 8
ø50	47	47	48	22	36	49	63	90	119	146	(stroke/3.6) + 7.5
ø63	45	47	48	22	36	49	63	90	119	146	(stroke/3.6) + 7.5
ø80	58.5	53	55	14	26	38	49	72	96	119	(stroke/4.3) + 2.5
ø100	69.5	61	65	20	32	42	53	76	98	120	(stroke/4.5) + 9

Code / Bore size(mm)	With switch										
	O	T0,T5 T2,T3		T1,T2Y,T3Y T2J,T2YD/T		T8		T2W,T3W		H0*	
		P	HD	P	HD	P	HD	P	HD	P	HD
ø40	66	41.5	11	41.5	10	41.5	5	40	13	42	4
ø50	73	43	13	43	12	43	7	44.5	15	44	6
ø63	85	47	13	47	12	47	7	50	15	47	6
ø80	105	57	14.5	57	13.5	57	8.5	60	16.5	58	7.5
ø100	121	63	18.5	63	17.5	63	12.5	68	20.5	64	11.5

*1 : Round up to the nearest whole number.
*2 : The position of the cushion needle cannot be changed.
*3 : For the dimensions of the accessories, refer to page 923.
*4 : Non-sag block (2-dashed line) will be added depending on the stroke. Refer to page 922.
RD: Rod side max. sensitivity position
HD: Head side max. sensitivity position

dimensions

● Head side trunnion (TB)

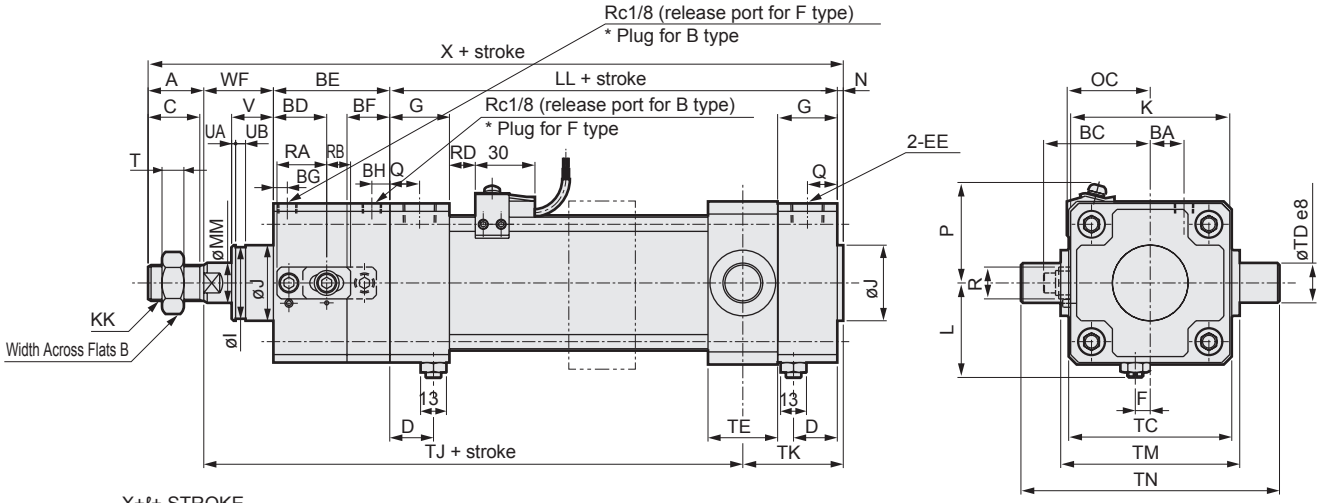

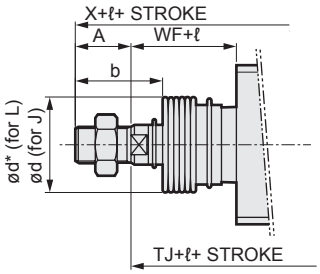

[With bellows]

Code / Bore size	Head side trunnion (TB) basic dimensions																			
	A	B	C	BA	BC	BD	BE	BF	BG	BH	D	EE	F	G	J	K	KK	LL	MM	N
ø40	22	22	20	7.5	39.5	22	47	18	7	7	18	Rc1/4	7.5	26	31	57	M 14 x 1.5	93	16	2
ø50	28	27	26	10	43.5	25	54	20	7	8	20	Rc3/8	0	28	38	66	M 18 x 1.5	101	20	2.5
ø63	28	27	26	17	53.5	26.8	58.5	21.5	7	9	22	Rc3/8	0	30	38	80	M 18 x 1.5	105	20	3
ø80	36	32	34	21	62.5	33.3	71	25	8	10	26	Rc1/2	0	34	43	98	M 22 x 1.5	116	25	3.5
ø100	45	41	43	25	72.5	38	81.5	28.5	8	10.5	28	Rc1/2	0	36	51	118	M 26 x 1.5	128	30	4

Code / Bore size	Q	T	V	R	RA	RB	I	UA	UB	WF	X	Mounting dimensions						
												L	TC	TD	TE	TJ	TK	TM	TN
ø40	13	8	18.5	16	18	10	29	2	5	33.5	197.5	38 to 39.5	57	16 $^{-0.032}_{-0.059}$	30	132	43.5	63	95
ø50	14	11	20.5	16	18	10	36	2	5	37	222.5	41 to 43.5	67	18 $^{-0.032}_{-0.059}$	30	148.5	46	80	116
ø63	15	11	21	16	25	12	36	2	5	35	229.5	47.5 to 50	82	20 $^{-0.040}_{-0.073}$	35	150.5	51	90	130
ø80	17	13	23.5	16	25	12	41	2	5	48	274.5	56 to 59	100	25 $^{-0.040}_{-0.073}$	40	180.5	58	115	165
ø100	18	16	32	16	25	12	49	3	6	53	311.5	66 to 69	121	35 $^{-0.050}_{-0.089}$	50	201	65.5	135	205

Code / Bore size	With bellows									
	b	d	d*	ℓ						
				50 or less	Over 50 to 100	Over 100 to 150	Over 150 to 200	Over 200 to 300	Over 300 to 400	Over 400 to 500	Over 500*1
ø40	41	40	40	25.5	41.5	58.5	75.5	108.5	141.5	174.5	(stroke/3.0) + 8
ø50	47	47	48	22	36	49	63	90	119	146	(stroke/3.6) + 7.5
ø63	45	47	48	22	36	49	63	90	119	146	(stroke/3.6) + 7.5
ø80	58.5	53	55	14	26	38	49	72	96	119	(stroke/4.3) + 2.5
ø100	69.5	61	65	20	32	42	53	76	98	120	(stroke/4.5) + 9

Code / Bore size(mm)	With switch										
	O	T0,T5 T2,T3		T1,T2Y,T3Y T2J,T2YD/T		T8		T2W,T3W		H0*	
		P	RD	P	RD	P	RD	P	RD	P	RD
ø40	66	41.5	11	41.5	10	41.5	5	40	13	42	4
ø50	73	43	13	43	12	43	7	44.5	15	44	6
ø63	85	47	13	47	12	47	7	50	15	47	6
ø80	105	57	14.5	57	13.5	57	8.5	60	16.5	58	7.5
ø100	121	63	18.5	63	17.5	63	12.5	68	20.5	64	11.5

*1 : Round up to the nearest whole number.
*2 : The position of the cushion needle cannot be changed.
*3 : For the dimensions of the accessories, refer to page 923.
*4 : Non-sag block (2-dashed line) will be added depending on the stroke. Refer to page 922.
RD: Rod side max. sensitivity position
HD: Head side max. sensitivity position

LCM
LCR
LCG
LCW
LCX
STM
STG
STS/STL
STR2
UCA2
ULK*
JSK/M2
JSG
JSC3/JSC4
USSD
UFCD
USC
UB
JSB3
LMB
LML
HCM
HCA
LBC
CAC4
UCAC2
CAC-N
UCAC-N
RCS2
RCC2
PCC
SHC
MCP
GLC
MFC
BBS
RRC
GRC
RV3*
NHS
HRL
LN
Hand
Chuk
MecHnd/Chuk
ShkAbs
FJ
FK
SpdContr
Ending

About non-sag block

Depending on its stroke, a non-sag block will be added to the middle part of the cylinder.
The number of non-sag blocks to be added differs depending on the bore size and the stroke as shown in the table below.

Number of non-sag blocks depending on stroke

Tube size (mm)	Stroke (mm)	Number of non-sag blocks
ø40	1200 to 1600	1
ø50	1200 to 1800	1
	1801 to 2000	2
ø63	1200 to 1800	1
	1801 to 2500	2
ø80	1500 to 2000	1
	2001 to 2500	2
ø100	1500 to 2000	1
	2001 to 2500	2

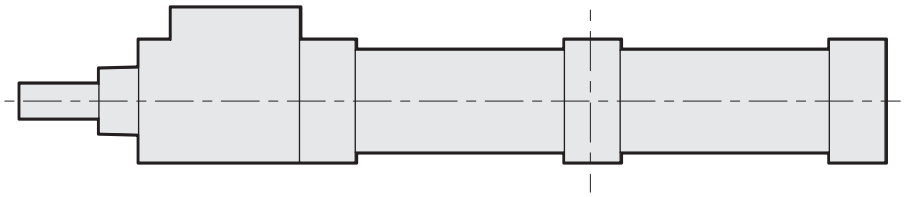

One non-sag block: To be added to the middle point between the covers.

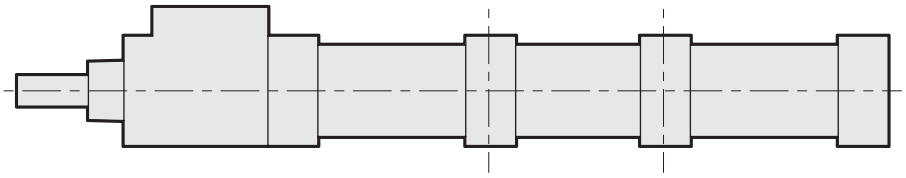

Two non-sag blocks: mount the 2 blocks so that the length of the 2 covers will be divided into 3 equal parts.

The dimensions of non-sag blocks are as shown in the figure below. When attaching the cylinder, take into account the dimensions of the non-sag blocks.

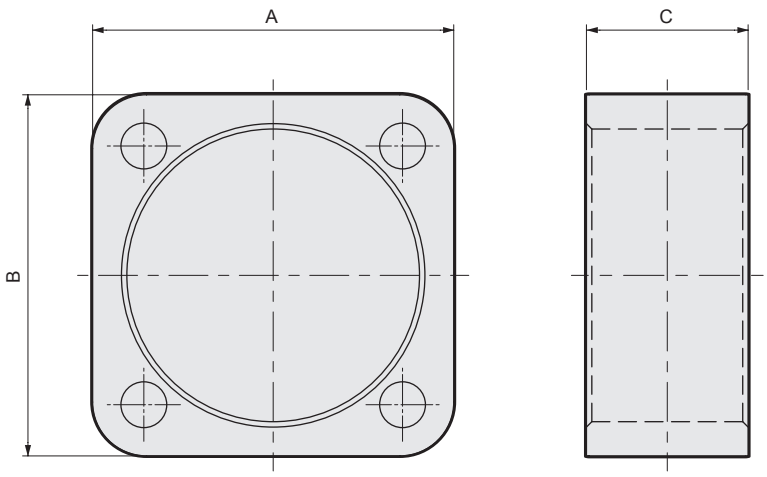

Non-sag block dimensions table

Tube size (mm)	Non-sag block dimensions		
	A	B	C
ø40	56	57	30
ø50	66	67	30
ø63	81	82	35
ø80	99	100	40
ø100	120	121	50

LCM
LCR
LCG
LCW
LCX
STM
STG
STS/STL
STR2
UCA2
ULK*
JSK/M2
JSG
JSC3/JSC4
USSD
UFCD
USC
UB
JSB3
LMB
LML
HCM
HCA
LBC
CAC4
UCAC2
CAC-N
UCAC-N
RCS2
RCC2
PCC
SHC
MCP
GLC
MFC
BBS
RRC
GRC
RV3*
NHS
HRL
LN
Hand
Chuk
MecHnd/Chuk
ShkAbs
FJ
FK
SpdContr
Ending

Accessory dimensions (rod eye/clevis bracket/pin)

● Rod eye (I)

CAD

Material: Cast iron
Painting

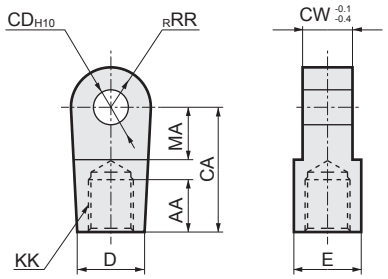

Model No.	Bore size (mm)	AA	CA	CD	CW	D	E	KK	MA	RR	Weight (kg)
S1-I-40	40	20	50	12	18	27	27	M14x1.5	21	16	0.26
S1-I-50	50	21	50	12	18	27	27	M18x1.5	21	16	0.24
S1-I-63	63	21	50	14	20	27	27	M18x1.5	21	16	0.25
S1-I-80	80	30	70	20	28	46	41	M22x1.5	30	25	0.88
S1-I-100	100	30	70	20	28	46	41	M26x1.5	30	25	0.84

● Eye bracket (B1)

CAD

Material: Cast iron
Painting

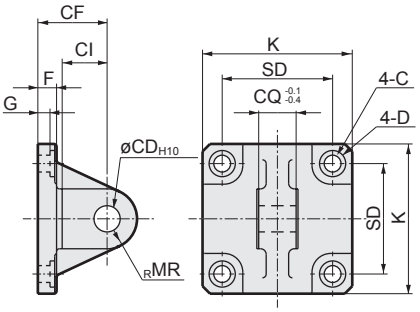

Model No.	Bore size (mm)	C	CD	CF	CI	CQ	D	F	G	K	MR	SD	Weight (kg)
S1-B1-40	40	9	12	32	18	18	14	10	6.5	57	12	40.5	0.32
S1-B1-50	50	9	12	32	18	18	14	10	6.5	66	12	48	0.38
S1-B1-63	63	9	14	37	24	20	14	10	6.5	80	16	59	0.57
S1-B1-80	80	14	20	52	30	28	20	14	10.5	98	20	74	1.27
S1-B1-100	100	14	20	52	30	28	20	16	10.5	118	20	90	1.64

● Trunnion No. 2 bracket

Material: Cast iron
Painting

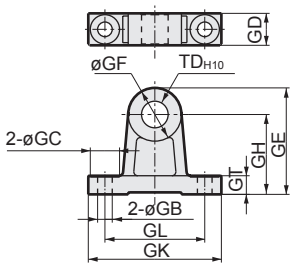

Model No.	GB	GC	GD	GE	GF	GH	GK	GL	GT	TD	Weight (kg)
S1-B4-40	9	17	19	61	32	45	80	60	12	16	0.25
S1-B4-50	9	17	19	63	36	45	85	65	12	18	0.28
S1-B4-63	11	22	24	80	40	60	100	75	14	20	0.52
S1-B4-80	14	24	26	85	50	60	115	85	14	25	0.70
S1-B4-100	14	24	35	107	64	75	130	100	17	35	1.48

Note: The trunnion No. 2 bracket is provided as 2 pcs./set.

● Rod clevis (Y)

CAD

Material: Cast iron
Painting

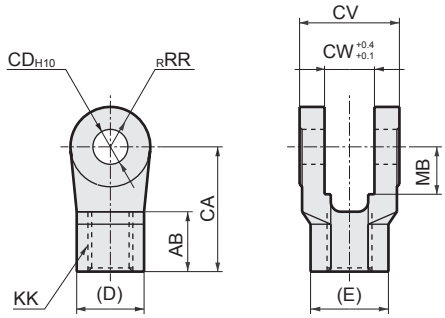

Model No.	Bore size (mm)	AB	CA	CD	CV	CW	D	E	KK	MB	RR	Weight (kg)
S1-Y-40	40	24	50	12	36	18	27	31.2	M14x1.5	19	16	0.25
S1-Y-50	50	24	50	12	36	18	27	31.2	M18x1.5	19	16	0.24
S1-Y-63	63	24	50	14	40	20	27	31.2	M18x1.5	19	16	0.26
S1-Y-80	80	35	70	20	56	28	41	47.3	M22x1.5	30	25	0.90
S1-Y-100	100	35	70	20	56	28	41	47.3	M26x1.5	30	25	0.85

*1: The MB dimension is the effective length of the CW dimension.
*2: A pin and a snap ring are attached.

● Clevis bracket (B2)

CAD

Material: Cast iron
Painting

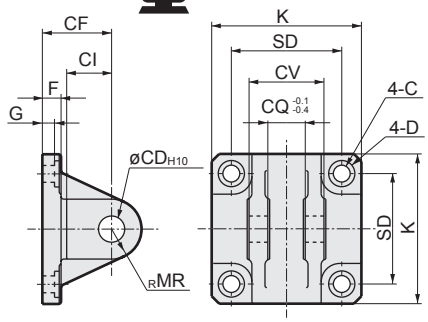

Model No.	Bore size (mm)	C	CD	CF	CI	CV	CQ	D	F	G	K	MR	SD	Weight (kg)
S1-B2-40	40	9	12	32	18	36	18	14	10	6.5	57	12	40.5	0.36
S1-B2-50	50	9	12	32	18	36	18	14	10	6.5	66	12	48	0.41
S1-B2-63	63	9	14	37	24	40	20	14	10	6.5	80	16	59	0.62
S1-B2-80	80	14	20	52	30	56	28	20	14	10.5	98	20	74	1.48
S1-B2-100	100	14	20	52	30	56	28	20	16	10.5	118	20	90	1.82

*1: A pin and a snap ring are attached.

● Pin (P)

CAD

Material: Steel
Zinc chromate treatment

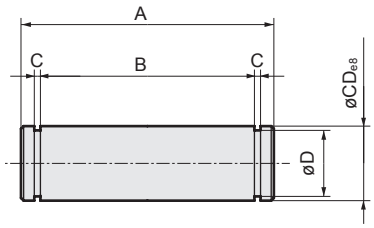

Model No.	Bore size (mm)	A	B	C	D	CD	Weight (kg)	Applicable snap ring
S1-P-40	40,50	43.5	36.3	1.15	11.5	12	0.04	C type for shaft 12
S1-P-63	63	47.5	40.2	1.15	13.4	14	0.06	C type for shaft 14
S1-P-80	80,100	64	56.2	1.35	19	20	0.16	C type for shaft 20

Pneumatic components

Safety Precautions

Be sure to read this section before use.
Refer to Intro Page 73 for general information of the cylinder, and to Intro Page 80 for general information of the cylinder switch.

Product-specific cautions: Free position locking large bore size cylinder USC Series

Design/selection

WARNING

- Cylinder with position locking mechanism (for holding cylinder stationary).
  Emergency stops (while the cylinder is in operation) can significantly decrease the service life.

- If back pressure is applied to the locking mechanism, the lock may be released. Use a discrete valve, or use an individual exhaust manifold.

- Do not apply torque to the rod when brakes are applied because the locking force may decrease, creating a dangerous condition. Also, use this product in mechanisms in which the rod does not rotate.

- To release the lock, when using forward locking, supply pressure to port B, and when using backward locking, supply pressure to port A. Check that load is not applied to the locking mechanism. When both ports A and B are exhausted and the piston is locked, if pressure is supplied to port A for forward locking or to port B for backward locking, the lock may not be released or, even if released, the piston rod may pop out, creating a hazard.

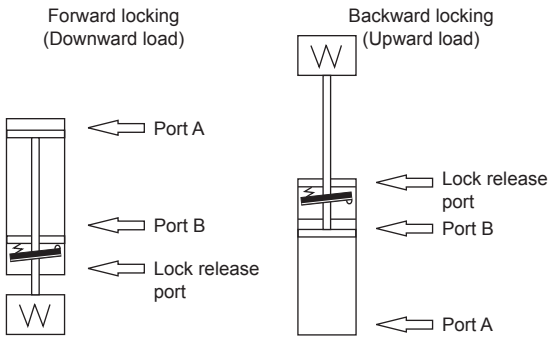

- Do not use multiple synchronized cylinders with position locking. If the synchronization deviates, an excess moment load or load concentration is applied to the cylinder locked first, risking lock release defects, shortened service life, or damage.

CAUTION

- Basic circuit diagram
  Arrange the air piping of this cylinder as shown in the figure below. Arranging the pipes differently from the figure below, such as piping the position locking part as a single unit, may cause problems such as delayed response.

  1. Be sure to branch the piping of this cylinder after the valve into the position locking part (lock release port as main piping) and cylinder part (cylinder port as branch piping) as shown in the figure below.

  2. Be sure to design the piping so that the lock is released before the cylinder starts operating. Failure to do so may prevent unlocking or cause the piston rod to jump out.

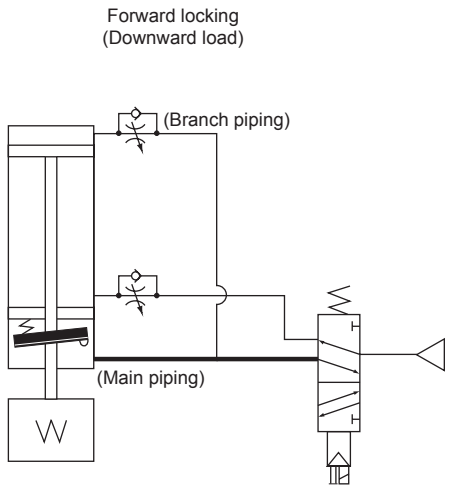

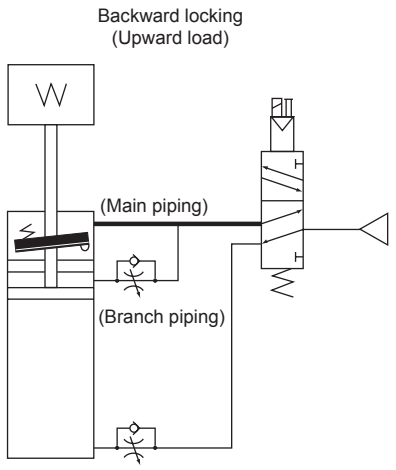

Using the emergency stop with the air piping as shown in the figure above will move the cylinder backward in a forward locking and forward in a backward locking, returning it to the original position. (When there is no residual pressure, the cylinder stops at that point.)

Mounting, installation and adjustment

⚠ WARNING

- Do not apply torque to the rod when brakes are applied because the locking force may decrease, creating a dangerous condition. Also, use this product in mechanisms in which the rod does not rotate.
- Do not apply grease to the piston rod during operation because the locking force may decrease, creating a dangerous condition.

⚠ CAUTION

- Main piping in the basic circuit diagram on the previous page should be thicker and shorter than branch piping.
- Be sure to provide a guide separately when using multiple synchronized cylinders.
  Using only the cylinder may impair synchronicity and cause the rod to twist, leading to malfunctions.

Use/maintenance

⚠ WARNING

- Do not apply additional grease to the piston rod or wipe off the grease that is already applied.
- Do not disassemble the lock, as doing so may be dangerous.
- Always use the product with the dust cover on, except for when performing manual release, in order to prevent failure or malfunction.
- For safety purposes, prevent the load from falling under its own weight during maintenance.

⚠ CAUTION

- When locking the first time after leaving the lock released for a long time, a delayed response may occur in the lock.
  Do not leave the lock pressurized, and operate the lock at each cylinder operation.
  (Use the basic circuit diagram shown on page 924)
- Keeping the cylinder with pressure applied to the lock mechanism may cause the lock to release. Do not use 3-position closed center and 3-position P.A.B connection solenoid valves.
- Due to the structure, the piston rod drops by about 1 mm when the lock is applied.
- If no air pressure is supplied in vertical mounting, etc., locking force may not be sufficient when the lock is manually released. This may cause the rod to move (drop) with the load's weight.
  For safety, take the following measures before manually releasing the lock:

  ● Move the load to the bottom end.
  ● Provide a stopper to the load
  ● Apply air pressure to the cylinder to balance the load.

- Be sure to set the manual release bolt to the locking position in normal use.

■ How to unlock manually

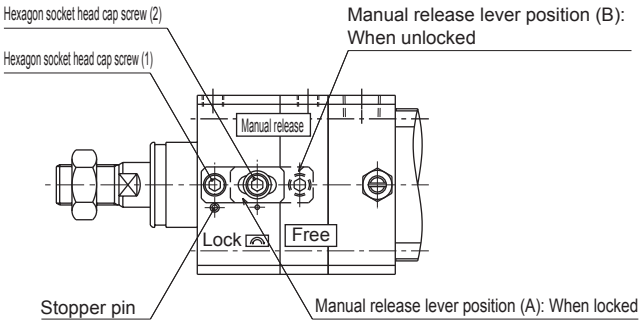

● Unlocking
1) Loosen the hexagon socket head cap screw (1) 3 or 4 turns.
2) Loosen the hexagon socket head cap screw (2) 1 or 2 turns.
3) Rotate the release lever by 180° from the manual release lever position (A) to (B) in the direction of the arrow.
4) The piston rod is freed.

● Locking
1) Rotate the release lever by 180° from the manual release lever position (B) to (A) in the direction of the arrow.
2) Tighten the hexagon socket head cap screw (1) where the release lever comes in contact with the stopper pin.
3) Tighten the hexagon socket head cap screw (2).
4) The piston rod is locked.

Note: Be sure to rotate the release lever in the direction of the arrow when manually unlocking.
The release lever must not be removed.
The release lever can be turned by loosening the hexagon socket head cap screw (2) by 1 or 2 turns.
Excessive loosening may cause the release lever to come off.
Tighten the hexagon socket head cap screw at 8 to 11 N·m.

- The cylinder body may be damaged or may malfunction if a unit with excessive inertia, etc., is actuated. Use within the allowable absorbed energy range.

UB

Lock unit

ø8/ø16

With brake/position locking

Overview

In order to support transfer functions copying the shape of the cylinder piston rod or the workpiece, this lock unit enables rod positioning.

CONTENTS

Product introduction	928
Series variation	928
● UB	930
⚠Safety precautions	932

Lightweight. Slim profile. That's why we have new jobs in mind for the position

Fixing mechanism which locks and unlocks linearly, using air.
Simple air control means remote operation is possible, enabling “fixing,” “improved safety,” and “position locking.”
Light and compact, it also handles “tracking transport.” Allow us to present new ideas for the position locking unit.

Lightweight and slim

Weight comparison (image) with the CKD brake unit

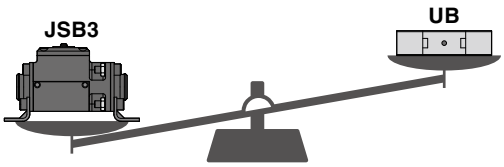

Faster transfer via robot

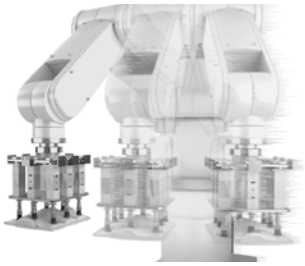

Manual release available

Insert a flathead screwdriver into the manual release hole and slide the piston to enable manual release. Manual release is possible even without air when embedding or during maintenance. (Pay attention to the screwdriver insertion position.)

Energy saving

While locked, neither electrical nor pneumatic power is needed.

Locking mechanism

Lock direction

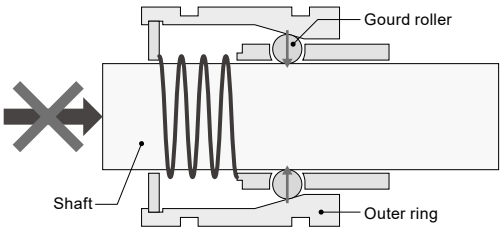

Locks when the gourd roller rolls into the wedge-shaped space formed by the shaft and outer ring.

Free direction

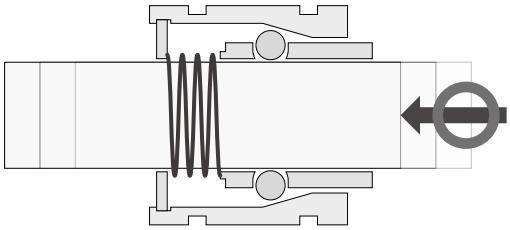

The mechanism does not lock in the reverse direction.

Lock unit

UB Series

Lock unit UB Series

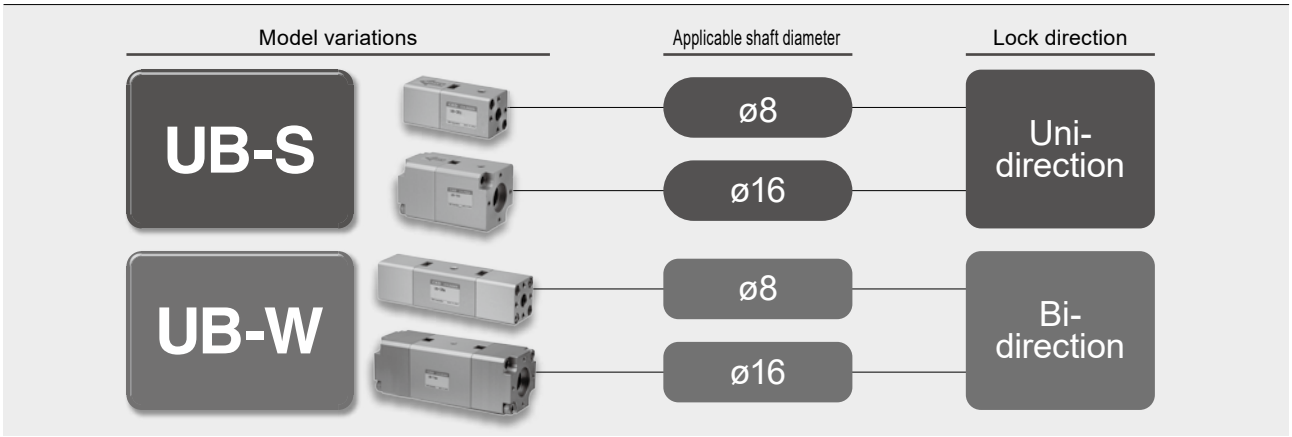

locking unit.

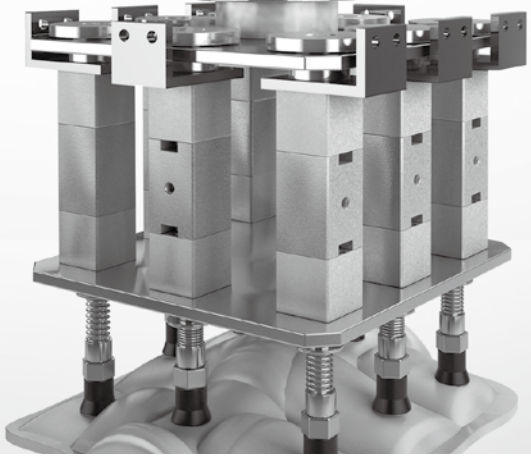

Applications

New ways of use made possible by this light, compact position locking unit.

Robot hand

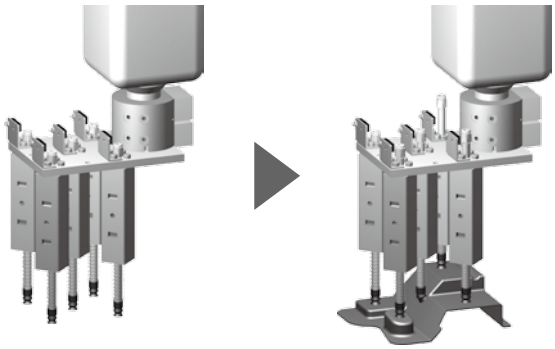

Tracks the workpiece shape simply by pressing the workpiece onto the shaft.

Tracking unit supporting from below

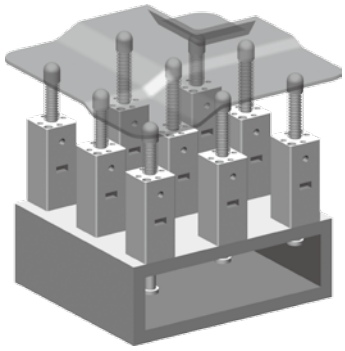

Tracks the workpiece shape simply by placing the workpiece on the shaft.

Clamp cylinder fixing and retention

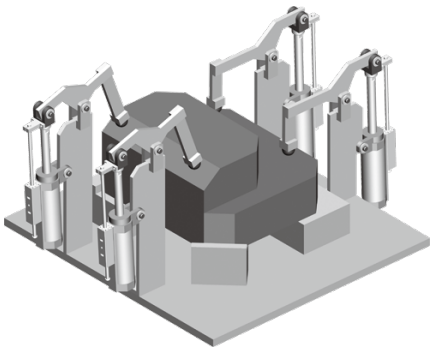

Saves energy because air is not required while locked.
(Note that no clamp force operates on the workpiece)

3D vise

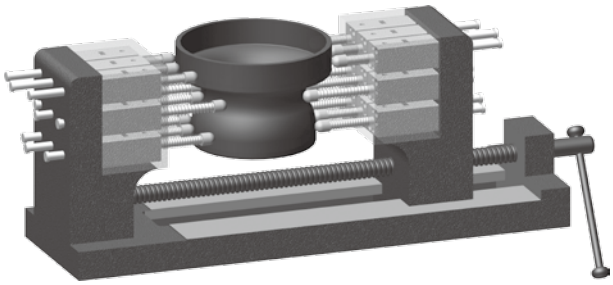

Tracks the workpiece shape simply by retaining the workpiece with the shafts at both sides.

Fixing and retention for pick & place stoppages (failsafe)

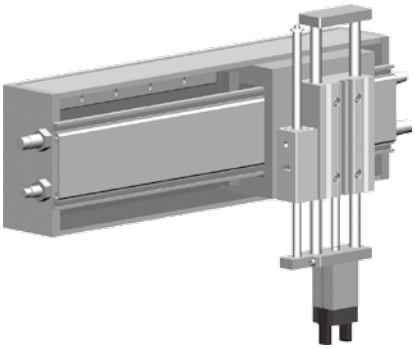

Cylinder position can be retained with a low-priced mechanism, providing position locking just in case it is needed. Protects valuable components from fall damage if the power goes out or the air runs out.

Tracking principle

When the workpiece is pressed against the shaft, the shaft transfers (tracks) its shape and is then fixed in the adjusted position by the position locking unit.

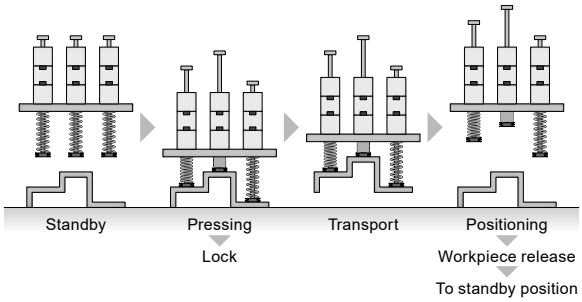

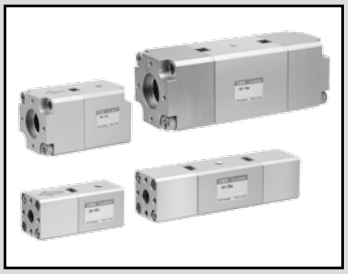

Lock unit

UB Series

● Applicable shaft diameter: ø8, ø16

RoHS

Specifications

1 MPa ≈ 145.0 psi, 1 MPa = 10 bar

Item		UB-08S	UB-16S	UB-08W	UB-16W
Working fluid		Compressed air			
Max. working pressure	MPa	1.0 (≈145 psi, 10 bar)			
Min. working pressure	MPa	0.3 (≈44 psi, 3 bar)			
Proof pressure	MPa	1.6 (≈232 psi, 16 bar)			
Ambient temperature	°C	-5 (23°F) to 60 (140°F) (no freezing)			
Holding force	N	180	450	180	450
Lubrication		Not required (use turbine oil class 1 ISO VG32 if necessary for lubrication)			
Lock direction		Uni-direction		Bi-direction	
Applicable shaft diameter and tolerance	mm	ø8 $^{+0.05}_{-0.10}$	ø16 $^{+0.10}_{-0.15}$	ø8 $^{+0.05}_{-0.10}$	ø16 $^{+0.10}_{-0.15}$
Weight	g	99	367	160	578

How to order

UB - 08 S

Ⓐ Applicable shaft diameter

Ⓑ Lock direction

Code	Description
Ⓐ Applicable shaft diameter	
08	ø8
16	ø16
Ⓑ Lock direction	
S	Uni-direction
W	Bi-direction

Internal structure diagram and parts list

● UB-08/16S

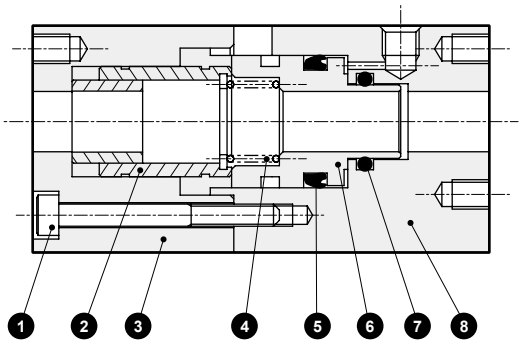

Cannot be disassembled

● UB-08/16W

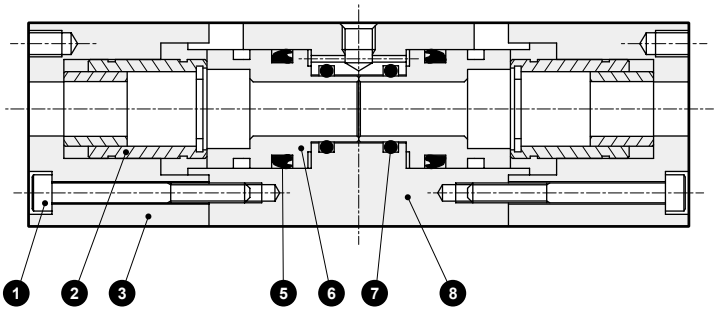

Cannot be disassembled

No.	Part name	Material	Remarks	No.	Part name	Material	Remarks
1	Hexagon socket head cap screw	Stainless steel		5	Piston packing	Nitrile rubber	
2	Clamper	–		6	Piston	Aluminum alloy	Alumite
3	Clamper case	Aluminum alloy	Hard alumite	7	O-ring	Nitrile rubber	
4	Spring	Steel	Electrodeposition	8	Body	Aluminum alloy	Hard alumite

Dimensions

● UB-08S

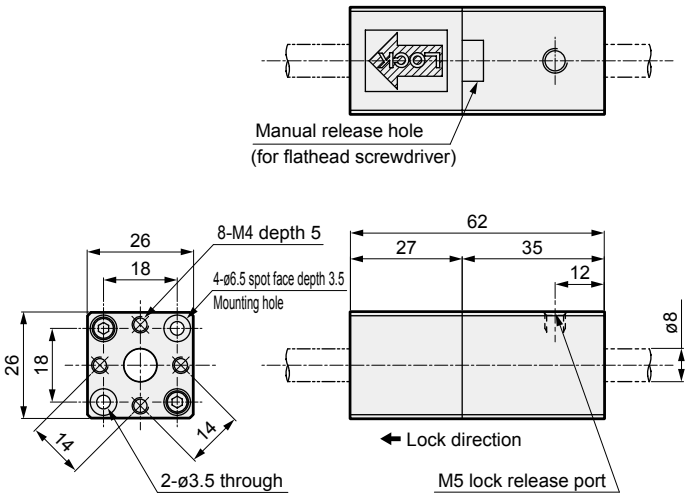

● UB-16S

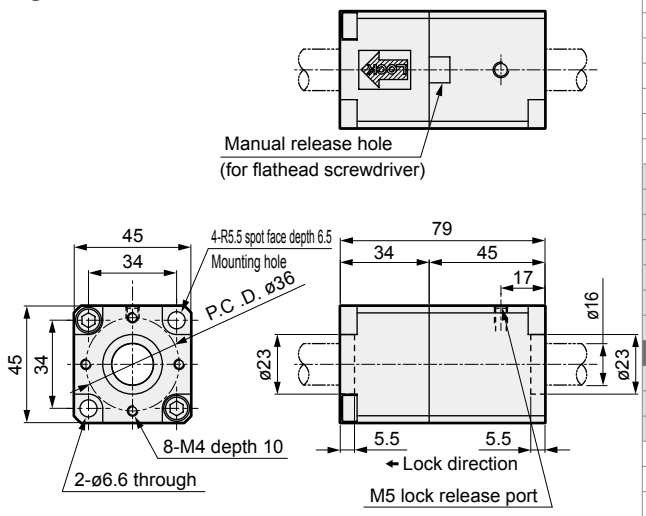

● UB-08W

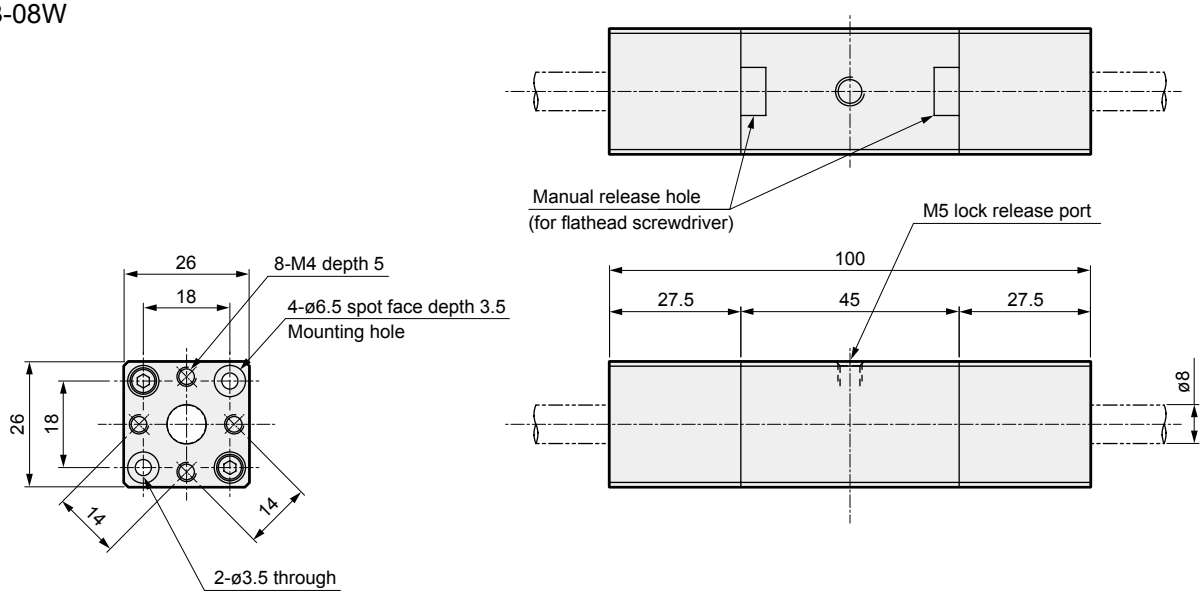

● UB-16W

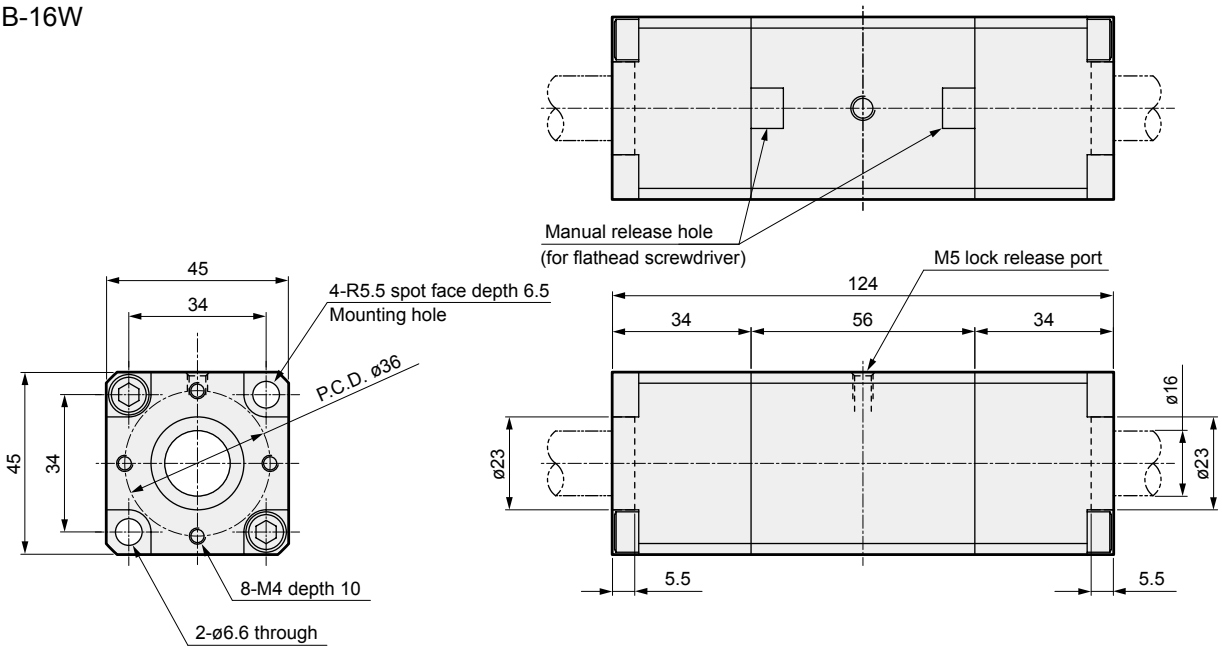

Pneumatic components

Safety Precautions

Be sure to read this section before use.
* Refer to Intro Page 73 for cylinders in general.

Product-specific cautions: Lock unit UB Series

Design/selection

CAUTION

■ The catalog shows static load. This product cannot be used as an emergency brake.

■ The shafts may not lock when there is residual air pressure.

Mounting, installation and adjustment

CAUTION

■ How to unlock manually

Insert a flathead screwdriver into the manual release hole and slide the piston to enable manual release. Manual release is possible even without air when embedding or during maintenance.
(Pay attention to the screwdriver insertion position.)

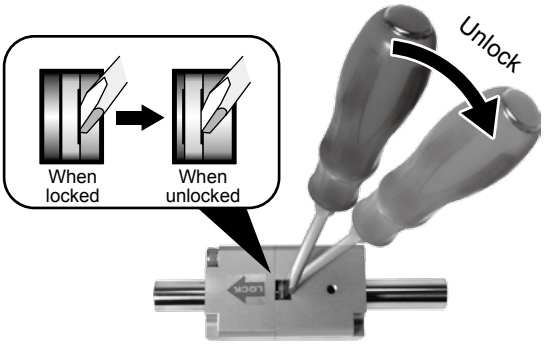

Design/selection

CAUTION

■ Disassembly of the parts may lead to the ingress of debris or the deterioration of component assembly precision.

■ Prevent the ingress of foreign matter, as contamination by foreign matter such as debris or cutting powder may lead to damage or functional deterioration of the rollers and other circulatory parts.

■ In usage environments where corrosive solvents, coolant, etc., may splash onto and enter the product, prevent adherence or entrance to the lock unit body with the use of a bellows, cover, etc.

JSB3

Brake unit

With brake/position locking

ø16/ø20/ø25/ø30/ø35/ø40/ø45

Overview

10 types of discrete brake units of brake cylinders (ø40 to ø180) are available. These powerful and compact brake units enable movable rods to stop instantaneously.
Usable as safety and clamp mechanisms in a variety of fields.

Features

High precision
Rod stopping accuracy ± 1.0 mm or less is realized by CKD unique brake mechanism (rod speed 300 mm/s, no load). Increases equipment precision.

Powerful holding force
Powerful holding force of 980 N to 20000 N is provided according to ø16 to ø45 rod diameter. Even if air source is shut off, the rod position is held.

Increased flexibility in design
Flexibly applicable to various pneumatic devices, enhancing flexibility in design.

CONTENTS

Product introduction	934
Series variation	934
● JSB3	936
⚠ Safety precautions	938

Brake unit JSB3 Series

LCM
LCR
LCG
LCW
LCX
STM
STG
STS/STL
STR2
UCA2
ULK*
JSK/M2
JSG
JSC3/JSC4
USSD
UFCD
UFCD
UB
JSB3
LMB
LML
HCM
HCA
LBC
CAC4
UCAC2
CAC-N
UCAC-N
RCS2
RCC2
PCC
SHC
MCP
GLC
MFC
BBS
RRC
GRC
RV3*
NHS
HRL
LN
Hand
Chuk
MecHnd/Chuk
ShkAbs
FJ
FK
SpdContr
Ending

●: Standard, ◎: Option

Model No.	Rod diameter (mm)	Rod length (mm)									Mounting		Page
		200	300	400	500	600	700	800	900	1000	Axial foot LB	Flange FA	
JSB3	ø16/ø20/ø25	●	●	●	●	●	●	●	●	●	◎	◎	936
	ø30/ø35	-	●	●	●	●	●	●	●	●	◎	◎	
	ø40/ø45	-	-	●	●	●	●	●	●	●	◎	◎	

Product introduction

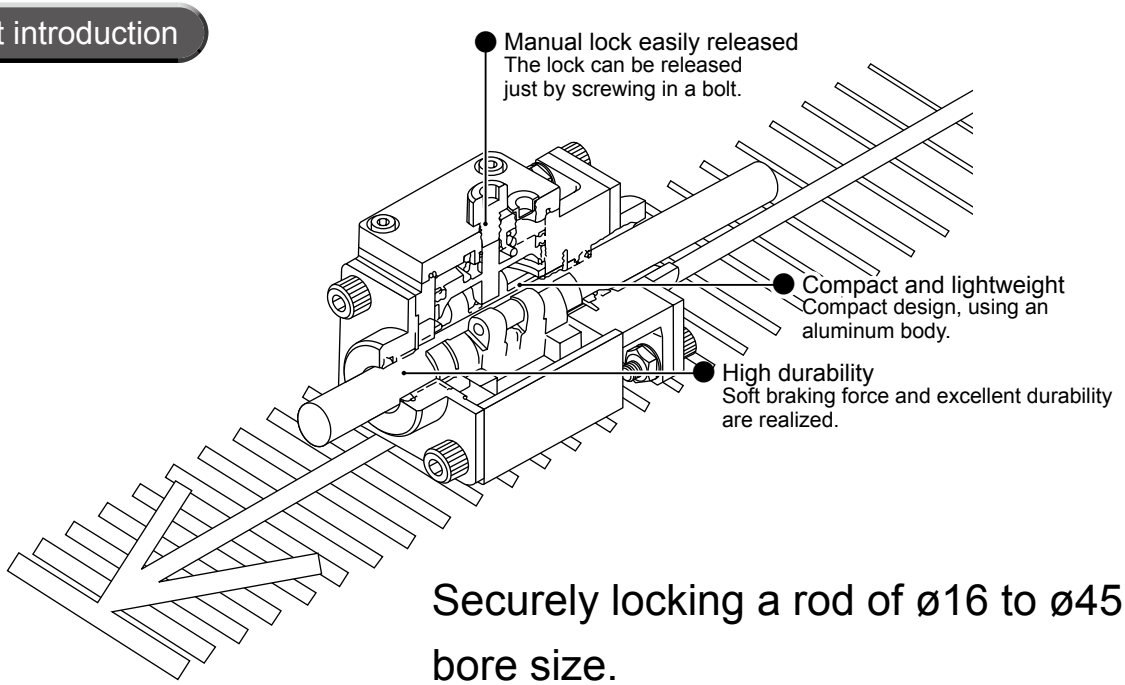

Securely locking a rod of ø16 to ø45 mm bore size.

Operational principle

● Brake release operating principle

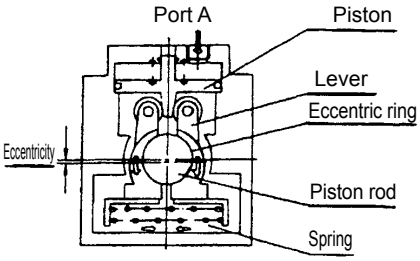

ⓐ Brake release operating principle

Air supplied from port A pushes the piston under it and opens the lever. The eccentric rings directly connected to the lever rotate in the arrow direction and release the piston rod.

● Brake operating principle

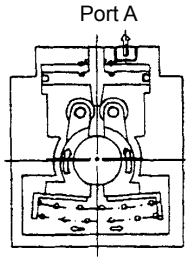

ⓑ Brake operating principle

If air is discharged from port A, the eccentric rings rotate in the arrow direction with the spring force, generating an eccentric load on the piston rod to apply a braking force.

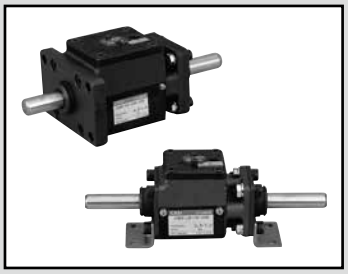

Brake unit

JSB3 Series

● Rod diameter: ø16/ø20/ø25/ø30/ø35/ø40/ø45

RoHS CAD

Specifications

Item		JSB3								
Rod diameter code		16	20	20A	25	30	35	35A	40	45
Working fluid		Compressed air								
Max. working pressure MPa		1.0 (≈150 psi, 10 bar)								
Min. working pressure MPa		0.3 (≈44 psi, 3 bar)								
Proof pressure MPa		1.6 (≈230 psi, 16 bar)								
Ambient temperature °C		-10 (14°F) to 60 (140°F) (no freezing)								
Port size		Rc1/8		Rc1/4		Rc3/8	Rc1/2			
Working rod speed mm/s		10 to 1000								
Lubrication		Not required (use turbine oil class 1 ISO VG32 if necessary for lubrication)								
Stopping accuracy mm		±1.0 (Rod speed 300 mm/s, no load) (*1)								
Holding force N		980	1569	2451	3922	6178	9600	12000	15800	20000
Rod diameter and tolerance mm		ø16f8	ø20f8		ø25f8	ø30f8	ø35f8		ø40f8	ø45f8
Rod surface roughness μmRz		1.2 to 1.6								
Weight kg	LB	1.8	2.5	3.7	6.7	11.6	18.5	20.3	33.0	44.0
	FA	1.8	2.5	4.1	7.3	12.1	20.3	26.4	36.8	51.5
	Additional weight per rod 100 m	0.16	0.25	0.25	0.39	0.56	0.76	0.76	0.99	1.25

*1: The stopping accuracy diminishes if the brake valve is separated. The value above is for piping of 1 m or less.
*2: Brake valves are also available. Contact CKD for details.

How to order

JSB3 — LB — 16 — 500

Ⓐ Mounting

Ⓑ Rod diameter

Ⓒ Rod length
*1
*2

Code	Description
Ⓐ Mounting	
LB	Axial foot
FA	Flange

Ⓑ Rod diameter (mm)

Code	Rod diameter
16	ø16
20	ø20
20A	ø20
25	ø25
30	ø30
35	ø35
35A	ø35
40	ø40
45	ø45

Ⓒ Rod length (mm)

	Rod diameter	ø16, ø20, ø25	ø30, ø35	ø40, ø45
Blank	Not included	●	●	●
200	200	●		
300	300	●	●	
400	400	●	●	●
500	500	●	●	●
600	600	●	●	●
700	700	●	●	●
800	800	●	●	●
900	900	●	●	●
1000	1000	●	●	●

⚠ Precautions for model No. selection

*1: Available up to 3000 mm in 1 mm increments.
*2: The rod length indicates the total length of rod.
Note that this is not the stroke length.

[Example of model No.]

JSB3-LB-16-500

Model: Brake unit

Ⓐ Mounting : Axial foot
Ⓑ Rod diameter : ø16 mm
Ⓒ Rod length : 500 mm

Dimensions

● Axial foot (LB) ø16 to ø30

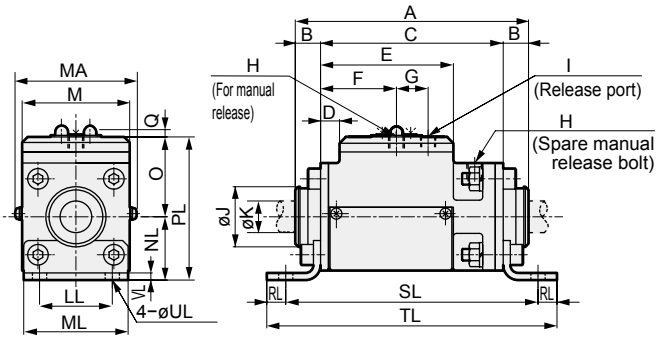

● Rod side flange (FA) ø16 to ø30

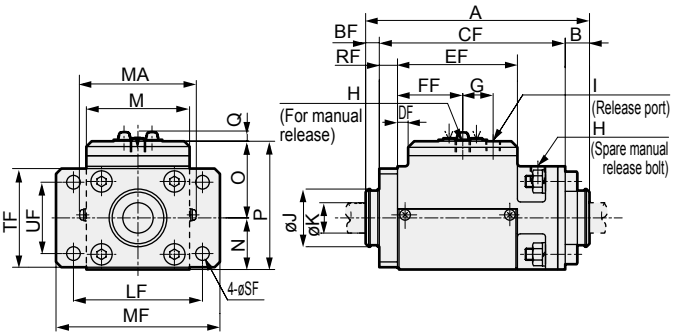

Code / Rod diameter code	A	B	BF	C	CF	D	DF	E	EF	F	FF	G	H	I	J	K	LL	LF
ø16	129	15	7	99	107	9	5	70	66	40	36	20	M10	Rc1/8	31	16	40	80
ø20	147.5	16	9	115.5	122.5	12	7	84	79	48	43	20	M10	Rc1/8	38	20	46	85
ø20A	164	16	8	132	140	13	5	99	91	56	48	27	M12	Rc1/4	38	20	60	106
ø25	186.5	17.5	4.5	151.5	164.5	13	7	119	113	66	60	27	M14	Rc1/4	43	25	74	125
ø30	243	26	13.5	191	203.5	17.5	11	149.5	143	83.5	77	35	M16	Rc3/8	51	30	80	144

Code / Rod diameter code	ML	MF	NL	N	O	PL	P	Q	RL	RF	SL	SF	TL	TF	UL	UF	VL	M	MA
ø16	57	100	40	28.5	46	86	74.5	5	10	12	138	9	158	57	9	40	3.2	57	66
ø20	66	108	40	34	50.5	90.5	84.5	5	12	12	159.5	9	183.5	65	9	47	4.5	68	77
ø20A	80	130	50	40	54	104	94	5	12	16	192	11	216	80	11	60	4.5	80	89
ø25	98	153	60	49	66	126	115	5	14	19	225.5	14	253.5	98	14	74	6.0	98	107
ø30	118	180	67	59	74	141	133	5	21	19	253	14	295	118	14	88	6.0	118	127

● Axial foot (LB) ø35 to ø45

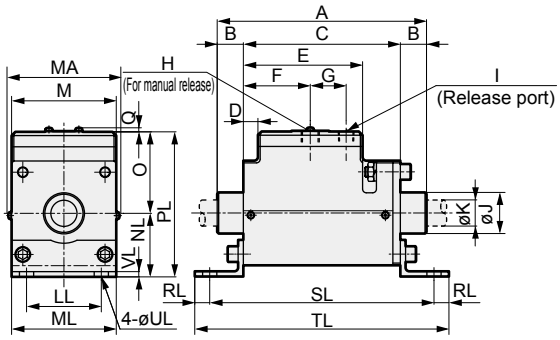

● Rod side flange (FA) ø35 to ø45

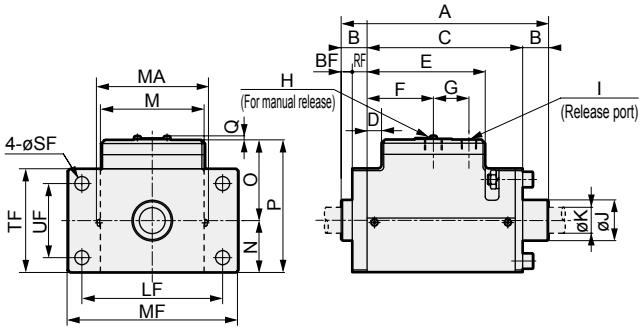

Code / Rod diameter code	A	B	BF	C	D	E	F	G	H	I	J	K	LF	LL	M	MA	MF
ø35	280	35	15	210	19.5	159.5	89.5	48	M24	Rc1/2	55	35	190	100	140	150	230
ø35A	296	35	15	226	18.5	175.5	97	50	M24	Rc1/2	55	35	212	112	157	167	250
ø40	356	48	26	260	23	200	111.5	58	M24	Rc1/2	62.5	40	236	118	177	190	280
ø45	385	53	28	279	14	214	114	70	M24	Rc1/2	68.5	45	265	132	200	213	310

Code / Rod diameter code	ML	NL	N	O	PL	P	Q	RF	RL	SL	SF	TL	TF	UL	UF	VL
ø35	140	85	70	109	194	179	5	20	20	300	19	340	140	19	100	7
ø35A	157	100	78.5	116.5	216.5	195	5	20	20	326	19	366	157	19	112	8
ø40	177	106	88.5	128	234	216.5	5	22	20	366	19	406	177	19	118	10
ø45	200	125	100	146	271	246	5	25	27	399	24	453	200	24	132	10

Pneumatic components

Safety Precautions

Be sure to read this section before use.
Refer to Intro Page 73 for general information of the cylinder, and to Intro Page 80 for general information of the cylinder switch.

Product-specific cautions: Brake unit JSB3 Series

Design/selection

WARNING

- Use a rod with a surface roughness between 1.2 to 1.6 μmRz. Use of a non-standard rod may result in abnormal wear of the brake shoe metal or a drop in holding force.
- Use a rod treated with industrial chrome plating (coating thickness of 15 μm or more).
- Do not use multiple synchronized brake units. If the synchronization deviates, load is concentrated on the brake unit where the brake was applied first, risking shortened service life or damage.

CAUTION

- Connect with spherical bearings (floating joints) to prevent damage to the screw at the rod end, to prevent wear or seizure in the brake unit, and to prevent twisting of the rod and brake unit at any position during movement.
- Sliding resistance is generated in this product even with brake released. Use of thrust as below or higher is recommended.

Rod diameter code	16	20	20A	25	30	35	35A	40	45
Required thrust guideline [N]	53	82	140	227	357	565	722	942	1193

- As shown in Fig.1, the brake unit is fixed to the table, so keep the rod parallel to the direction of table movement.

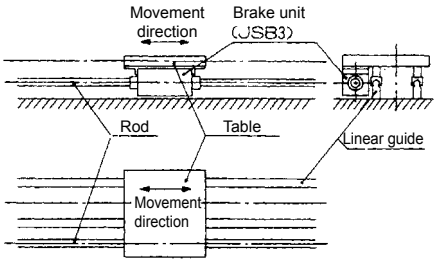

Fig. 1

- Do not use for rotating rod braking.
- Note that stopping accuracy is adversely affected if the brake unit air supply pipe is too long.
- Do not apply lateral load moment to brake units when using in a horizontal state.

Mounting, installation and adjustment

CAUTION

- Check that load is applied in the rod axial direction.
- Take special care in handling so as not to cause scratches or dents.
  Rough handling may result in abnormal wear of the brake shoe metal or a drop in holding force.

Use/maintenance

WARNING

- Never disassemble the brake section, as this is dangerous.
- Do not apply grease.
  It may cause the holding force to decrease.
- For safety purposes, prevent the load from falling under its own weight during maintenance.

CAUTION

- Make sure that water and oil do not contact the brake unit and rod section.
  Water may cause corrosion and ultimately lead to malfunctioning.
  Splattered oil may compromise the holding force and stopping accuracy.
- If the manual release bolt is removed while the piston rod is pulled out, the bolt cannot be screwed in. When the manual release bolt has been removed, supply air from the brake release port and screw in the bolt.

LMB

Linear guide lock

With brake/position locking

Overview

When used with a system incorporating a linear guide, this lock unit can be used to lock a workpiece after moving it to a specified position, or to enable emergency stop for safety, etc.

Features

- Compact but powerful holding force.
- Very little backlash when locked.
- Unit available for holding when stopped, emergency stop or position locking.
- Unlocked by air supply. (Manual release possible)
- Dust-proofing is handled by a scraper provided as standard in front of and behind the lock unit.

CONTENTS

● LMB 942

⚠ Safety precautions 944

LCM
LCR
LCG
LCW
LCX
STM
STG
STS/STL
STR2
UCA2
ULK*
JSK/M2
JSG
JSC3/JSC4
USSD
UFCD
UFCD
UB
JSB3
LMB
LML
HCM
HCA
LBC
CAC4
UCAC2
CAC-N
UCAC-N
RCS2
RCC2
PCC
SHC
MCP
GLC
MFC
BBS
RRC
GRC
RV3*
NHS
HRL
LN
Hand
Chuk
MecHnd/Chuk
ShkAbs
FJ
FK
SpdContr
Ending

Operational principle

● When unlocked

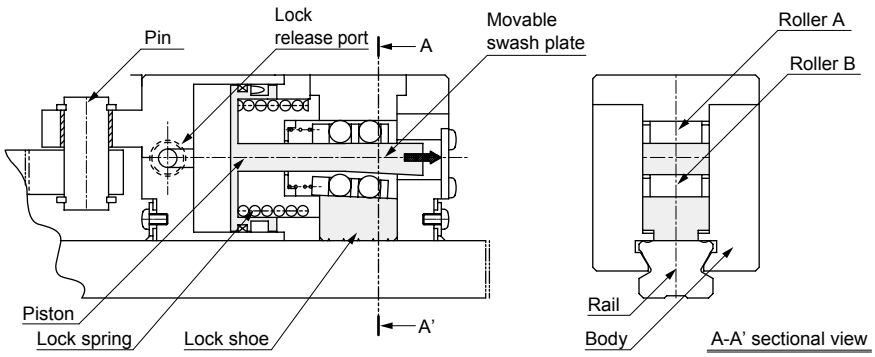

When the lock release port is pressurized with air, the piston and the tapered movable swash plate connected to the piston move in the direction of the arrow, releasing the contact of roller B and the movable swash plate.
The pressurizing force of the lock shoe against the rail is eased, and the lock is released.
Note that the lock shoe may remain in contact with the rail.

● When locked

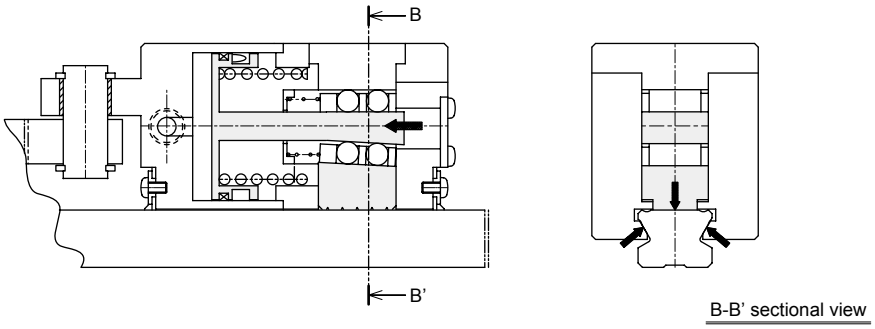

When air is discharged from the lock release port, the piston and the tapered movable swash plate connected to the piston are moved in the direction of the arrow by the spring lock. The amplifying effect of the taper is passed through roller B so that the lock shoe presses the rail with force.
Frictional force is generated on the rail by the three-directional pressurizing force as shown with the arrows in the B-B' sectional view, and the rail is held with force.

Applications

● Table fixing and position locking

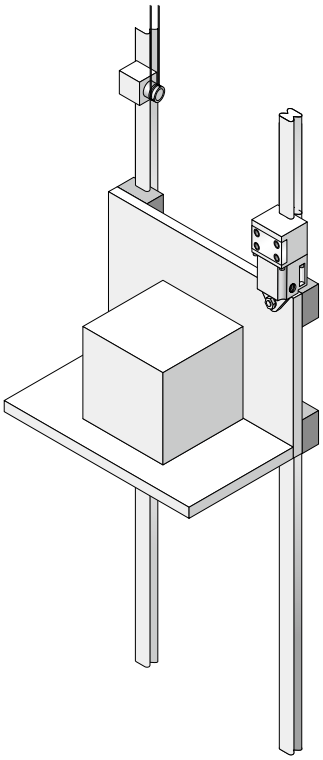

● X-Y table fixing and holding

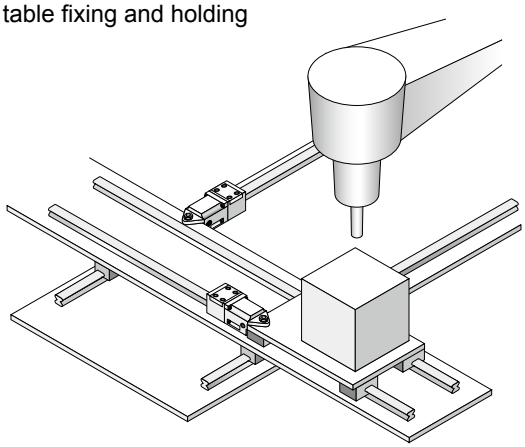

● Table fixing and holding at the desired position

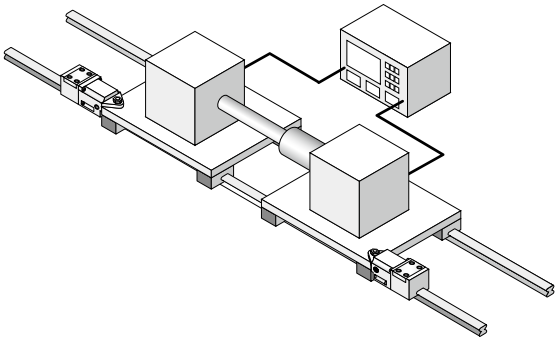

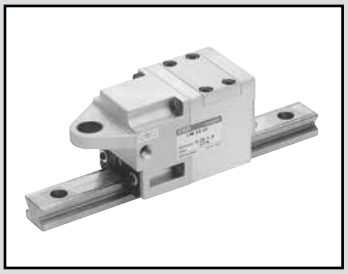

Linear guide lock

LMB Series

Specifications

Item	LMB-SR-15	LMB-SR-20	LMB-SR-25
Operating rails	SR-15/SSR-15 THK	SR-20/SSR-20 THK	SR-25/SSR-25 THK
Working fluid	Compressed air		
Max. working pressure MPa	1.0 (≈150 psi, 10 bar)		
Min. working pressure MPa	0.35 (≈51 psi, 3.5 bar)		
Proof pressure MPa	1.5 (≈220 psi, 15 bar)		
Ambient temperature °C	-5 (23°F) to 60°C (140°F) (no freezing)		
Lubrication	Not required (use turbine oil class 1 ISO VG32 if necessary for lubrication)		
Port size	Rc1/8		
Holding force N (*1)	1175	1960	2450
Sliding resistance value N Ref value (*2)	5.8 or less	9.8 or less	15.6 or less
Weight g	600	1100	1900

*1: The holding force is the force that can retain the static load without vibration or impact when the lock is ON in absence of load.
*2: Resistance value (reference value) when the product slides horizontally on a rail with Alvania grease No. 2 (Showa Shell Sekiyu K.K.) applied.

How to order

LMB-SR - 15

Ⓐ Operating rail size

Code	Description
Ⓐ Operating rail size	
15	SR-15/SSR-15
20	SR-20/SSR-20
25	SR-25/SSR-25

Dimensions

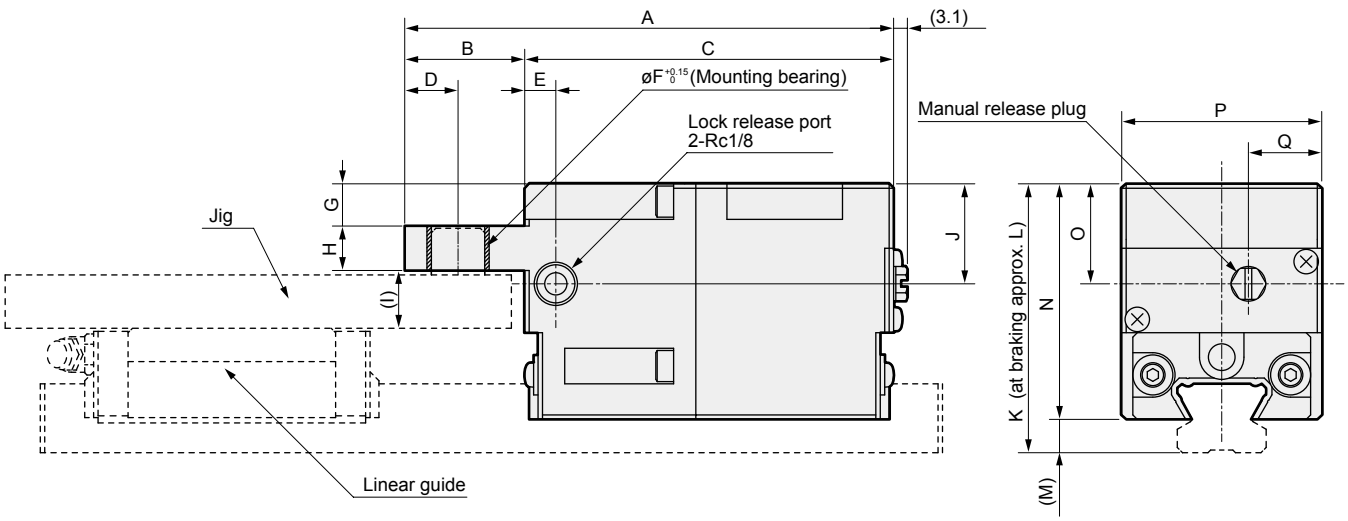

Model No.	A	B	C	D	E	F	G	H	I	J	K	L	M	N	O	P	Q
LMB-SR-15	100	24	76	10	7	10	7	8	8	16.5	47	47.5	6.5	40.5	17.5	35	13
LMB-SR-20	110	27	83	12	7	12	9.5	10	13	22.5	60.5	61	7.5	53	22.5	45	16.5
LMB-SR-25	125	32	93	13.5	7	15	13	10	17	27.5	73	73.5	9	64	27.5	55	19.5

Note: The rail and slide table dimensions are not shown since they are manufactured by THK.

Pneumatic components

Safety Precautions

Be sure to read this section before use.
Refer to Intro Page 73 for general information of the cylinder, and to Intro Page 80 for general information of the cylinder switch.

Product-specific cautions: Linear guide lock LMB Series

Design/selection

⚠ CAUTION

- Consult with CKD if impact load is applied. (It may slip due to the impact force.)
- Do not apply lateral load moment to the lock unit.
- Avoid use in very dusty areas, or where water or oil could come in contact. (It may cause the holding force to decrease.)
- Do not place a workpiece directly onto the lock unit.

Mounting, installation and adjustment

⚠ CAUTION

- How to unlock manually

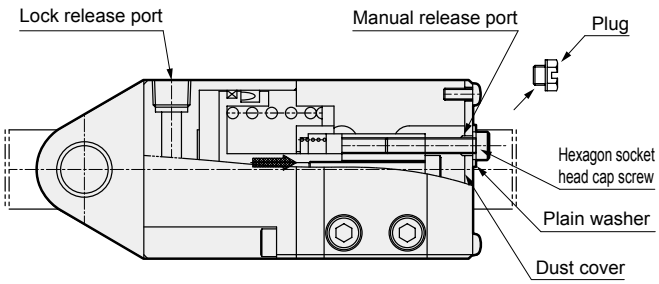

- Confirm that external force is not applied when there is no air at the lock release port, and then disconnect the plug.
- Insert the M3 x 18 (LMB-SR-15) and M4 x 22 (LMB-SR-20, 25) hexagon socket head cap screw into the hole from which the plug was removed until the threads are caught. When inserting the hexagon socket head cap screw, insert a plain washer, and make sure that the bolt seat does not contact the dust cover.
- Once the threads are caught, screw in the screw until it stops in order to release the lock into the free state.

*1: At shipment, the product is in the manual unlocking state. Store the hexagon socket head cap screws and flat washers so as not to lose them.
*2: Do not use hexagon socket head cap screws other than the sizes above. (It may damage the screws or disable unlocking.)
*3: If released manually while the seat of the hexagon socket head cap screw and dust cover are in contact, the dust cover may be scraped and dust generated. Also, insert a flat washer and manually unlock without contact so as not to render plug screw-in impossible.

- Mounting method
  - Example of Y rod clevis mounting

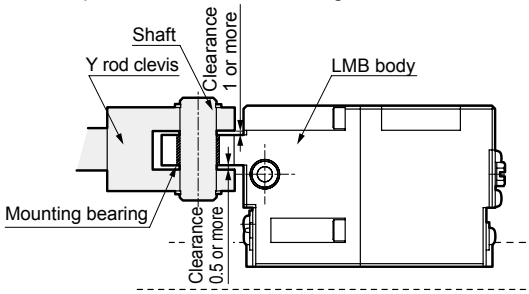

  - Fixing from the top

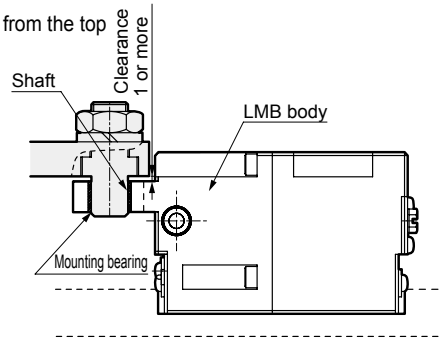

  - Fixing from the bottom

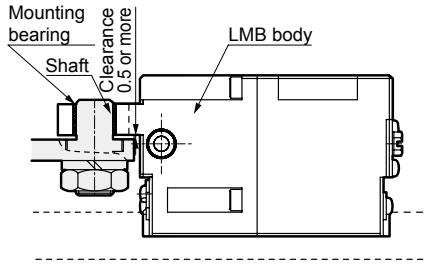

Insert a shaft (pin) into the bearing for installation and connect with the slide table. At this time, provide clearance as shown in the figure above. (Due to the structure, the LMB body lowers during locking, so if the bearings are fixed without a clearance, the lock will not be applied.)

Use/maintenance

⚠ WARNING

- Never disassemble the lock unit, as this is dangerous.

LML

Linear guide lock

With brake/position locking

Overview

When used with a system incorporating a linear guide, this lock unit can lock the position of a workpiece after moving it to the specified position, hold it during stop for safety and prevent it from falling off.

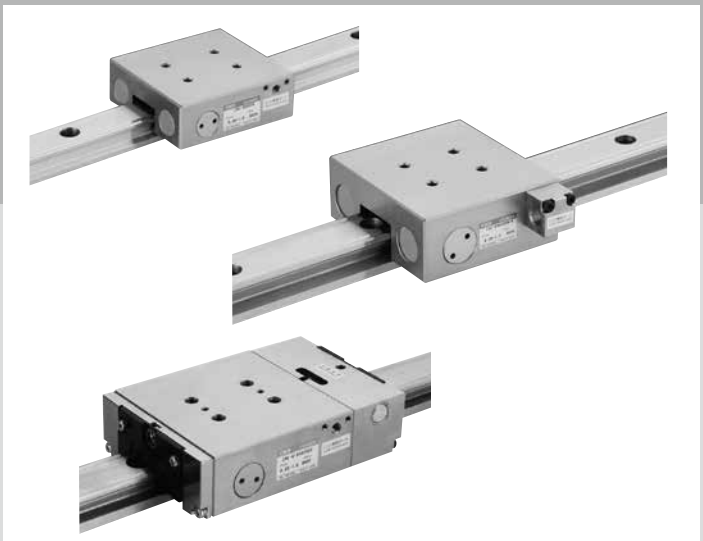

CONTENTS

Product introduction and application examples	946
● LML	947
⚠ Safety precautions	949

LCM
LCR
LCG
LCW
LCX
STM
STG
STS/STL
STR2
UCA2
ULK*
JSK/M2
JSG
JSC3/JSC4
USSD
UFCD
UFCD
UB
JSB3
LMB
LML
HCM
HCA
LBC
CAC4
UCAC2
CAC-N
UCAC-N
RCS2
RCC2
PCC
SHC
MCP
GLC
MFC
BBS
RRC
GRC
RV3*
NHS
HRL
LN
Hand
Chuk
MecHnd/Chuk
ShkAbs
FJ
FK
SpdContr
Ending

Product introduction

Since it is the same height as the linear guide block, the lock can make good use of the empty space.

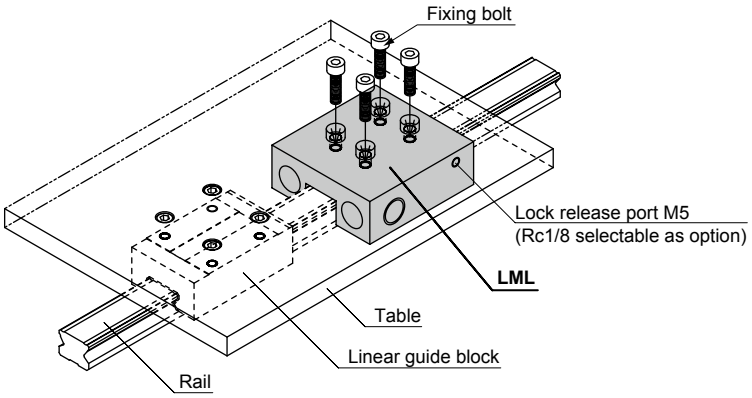

- ◆Compact but powerful holding force.
- ◆Unlocked by air supply
  (Manual release option is available separately.)
- ◆Useful for holding the cylinder during stop and position locking (holding the cylinder stationary)
- ◆ RoHS compliant

Options

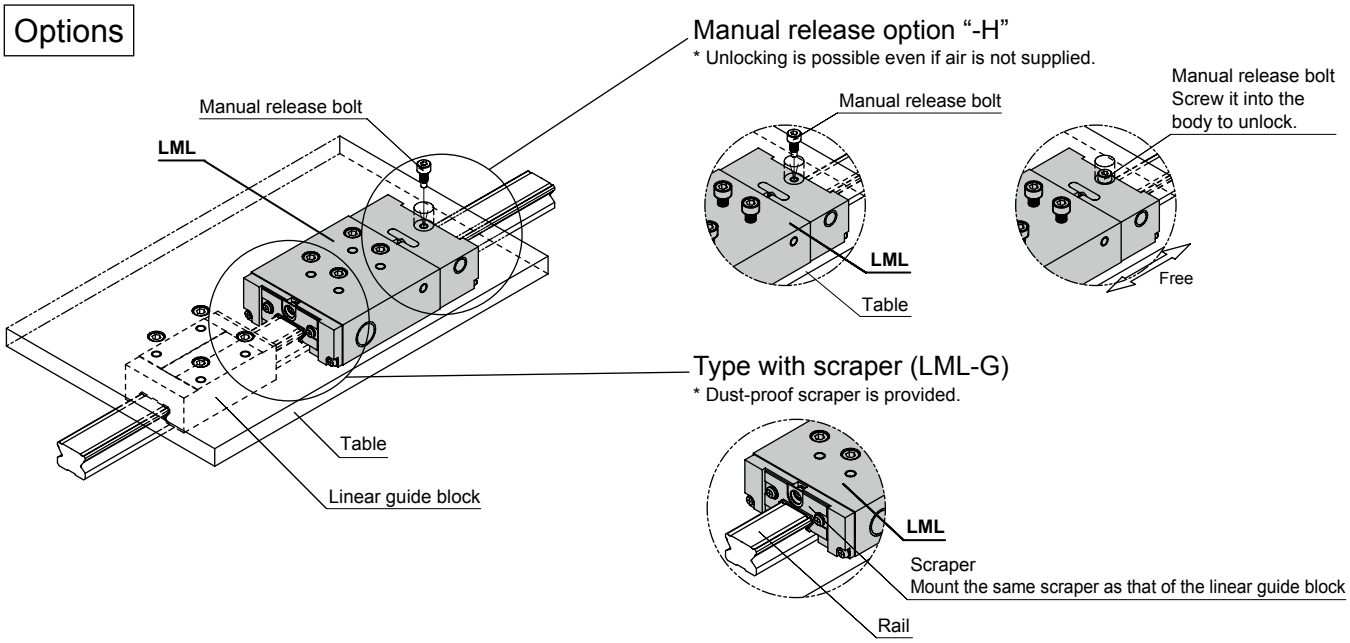

Applications

● Table fixing, position locking and holding

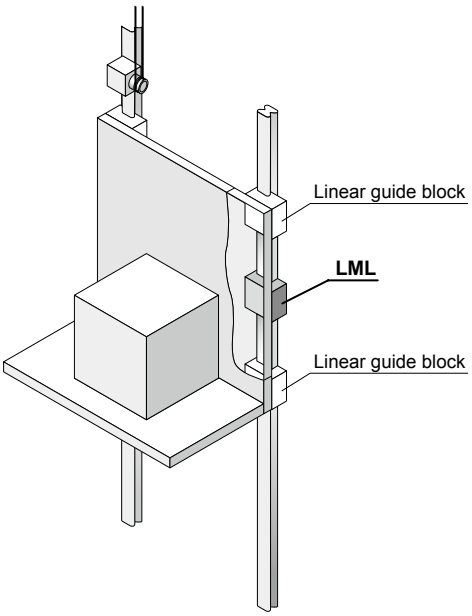

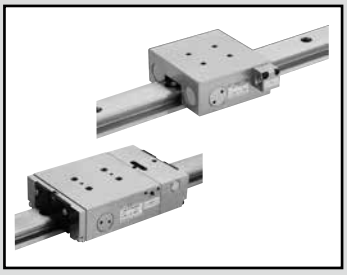

Linear guide lock

LML Series

RoHS

Specifications

Item		LML-15	LML-20	LML-25	LML-30	LML-35
Rail width	mm	15	20	25	30	35 *1
Manufacturers of compatible guides		THK/IKO				
Working fluid		Compressed air				
Max. working pressure	MPa	1.0 (≈150 psi, 10 bar)				
Min. working pressure	MPa	0.35 (≈51 psi, 3.5 bar)				
Proof pressure	MPa	1.5 (≈220 psi, 15 bar)				
Ambient temperature	°C	-5 (23°F) to 60 (140°F) (no freezing)				
Lubrication		Not available				
Port size		M5 (Rc1/8: Option selection)				
Holding force	N (*2)	300	450	600	850	1150
Default backlash		±0.05				
Weight	Body	600	900	1200	1900	2800
	Scraper additional weight	50	70	100	180	220
g	Manual release additional weight	160	230	340	550	820

*1 For compatible rail, refer to “How to order”.
*2 The holding force is the force that can retain the static load without vibration or impact when the lock is ON in absence of load.
The holding force above is the value when Alvania grease No. 2 (Showa Shell Sekiyu K.K.) is applied. Note that the holding force may vary in some environments.

LCM
LCR
LCG
LCW
LCX
STM
STG
STS/STL
STR2
UCA2
ULK*
JSK/M2
JSG
JSC3/JSC4
USSD
UFCD
UFCD
UB
JSB3
LMB
LML
HCM
HCA
LBC
CAC4
UCAC2
CAC-N
UCAC-N
RCS2
RCC2
PCC
SHC
MCP
GLC
MFC
BBS
RRC
GRC
RV3*
NHS
HRL
LN
Hand
Chuk
MecHnd/Chuk
ShkAbs
FJ
FK
SpdContr
Ending

How to order

Compatible guide: THK

● Without scraper

LML - SR 20 W - B H

● With scraper

LML-G - SR 20 W - B H

Ⓐ Operating rail

Ⓑ Operating rail width

Ⓒ Operating unit

Ⓓ Port

Ⓔ Manual release

Code	Description
Ⓐ Operating rail	
SR	Refer to the table below for combinations of operating rail, operating rail width, and operating unit.
SSR	
HSR	
SHS	
NR	
NRS	
SNR	
SNS	
Ⓑ Operating rail width	
15	Refer to the table below for combinations of operating rail, operating rail width, and operating unit.
20	
25	
30	
35	
Ⓒ Operating unit	
Refer to the table below for codes.	
Ⓓ Port	
Blank	Lock release port M5
B	Lock release port Rc1/8
Ⓔ Manual release	
Blank	None
H	With Note

Note: Be sure to mount LML on rail before operating manual release.

Table

Ⓑ Operating rail width	Ⓐ Operating rail																									
	SR								SSR			HSR								SHS						
15	●				-				●	●		●			-					●				●	-	
20	●				-				●	●		●			●					●				-	-	
25	-				●				●	●		●			●					●				●	●	
30	●				-				●	-		●			●					●				●	●	
35	●				-				●	-		●			●					●				●	●	
Ⓒ Operating unit	W	V	TB	SB	WY	VY	TBY	SBY	XW	XV	XTB	A	B	R	LA	LB	LR	CA	HA	CB	HB	C	LC	V	LV	R	LR

Ⓑ Operating rail width	Ⓐ Operating rail																			
	NR						NRS						SNR				SNS			
15	-						-						-				-			
20	-						-						-				-			
25	-						-						-				-			
30	●						●						●				●			
35	●						●						●				●			
Ⓒ Operating unit	A	LA	B	LB	R	LR	A	LA	B	LB	R	LR	C	LC	R	LR	C	LC	R	LR

LCM
LCR
LCG
LCW
LCX
STM
STG
STS/STL
STR2
UCA2
ULK*
JSK/M2
JSG
JSC3/JSC4
USSD
UFCD
USC
UB
JSB3
LMB
LML
HCM
HCA
LBC
CAC4
UCAC2
CAC-N
UCAC-N
RCS2
RCC2
PCC
SHC
MCP
GLC
MFC
BBS
RRC
GRC
RV3*
NHS
HRL
LN
Hand
Chuk
MecHnd/Chuk
ShkAbs
FJ
FK
SpdContr
Ending

How to order

Compatible guide: IKO

● Without scraper

LML - ME 20 - B H

● With scraper

LML-G - ME 20 - B H

Ⓐ Operating rail and unit

Ⓑ Operating rail width

Ⓒ Port

Ⓓ Manual release

Code	Description
Ⓐ Operating rail and unit	
Refer to the table below for codes.	
Ⓑ Operating rail width	
15	Refer to the table below for combinations of operating rail and operating rail width.
20	
25	
30	
35	
Ⓒ Port	
Blank	Lock release port M5
B	Lock release port Rc1/8
Ⓓ Manual release	
Blank	None
H	With Note

Note: Be sure to mount LML on rail before operating manual release.

Table

Ⓑ Operating rail width	Ⓐ Operating rail and unit																	
	ME	MEC	MET	METC	LWE	LWEC	LWET	LWETC	MES	MESC	LWES	LWESC	MEG	METG	LWEG	LWETG	MESG	LWESG
15	●				●				●		●		●					
20	●				●				●		●		●					
25	●				●				●		●		●					
30	●				●				●		●		●					
35	●				●				●		●		-					

Ⓑ Operating rail width	Ⓐ Operating rail and unit															
	LWH	LWHT	LWHD	LWHS	MH	MHT	MHD	MHS	LWHTG	MHG	MHTG	LWHSG	MHSG	LWHG	MHDG	LWHDG
15	●		●	●	●		●	●	-			-		-	-	-
20	●		-	●	●		-	●	●			●		●	-	-
25	●		●	●	●		●	●	●			●		●	●	●
30	●		●	●	●		●	●	●			●		●	●	●
35	●		●	-	●		●	-	●			-		●	●	●

⚠ Safety precautions

● The product cannot function as brake (to stop a moving workpiece).
When using it for position locking (holding the cylinder stationary), the dynamic force should not exceed 50% of the holding force.

● For the manual release option -H, use the special release bolt attached with the product to prevent failure.

LCM
LCR
LCG
LCW
LCX
STM
STG
STS/STL
STR2
UCA2
ULK*
JSK/M2
JSG
JSC3/JSC4
USSD
UFCD
UFCD
UB
JSB3
LMB
LML
HCM
HCA
LBC
CAC4
UCAC2
CAC-N
UCAC-N
RCS2
RCC2
PCC
SHC
MCP
GLC
MFC
BBS
RRC
GRC
RV3*
NHS
HRL
LN
Hand
Chuk
MecHnd/Chuk
ShkAbs
FJ
FK
SpdContr
Ending

Dimensions

● Without scraper or manual release

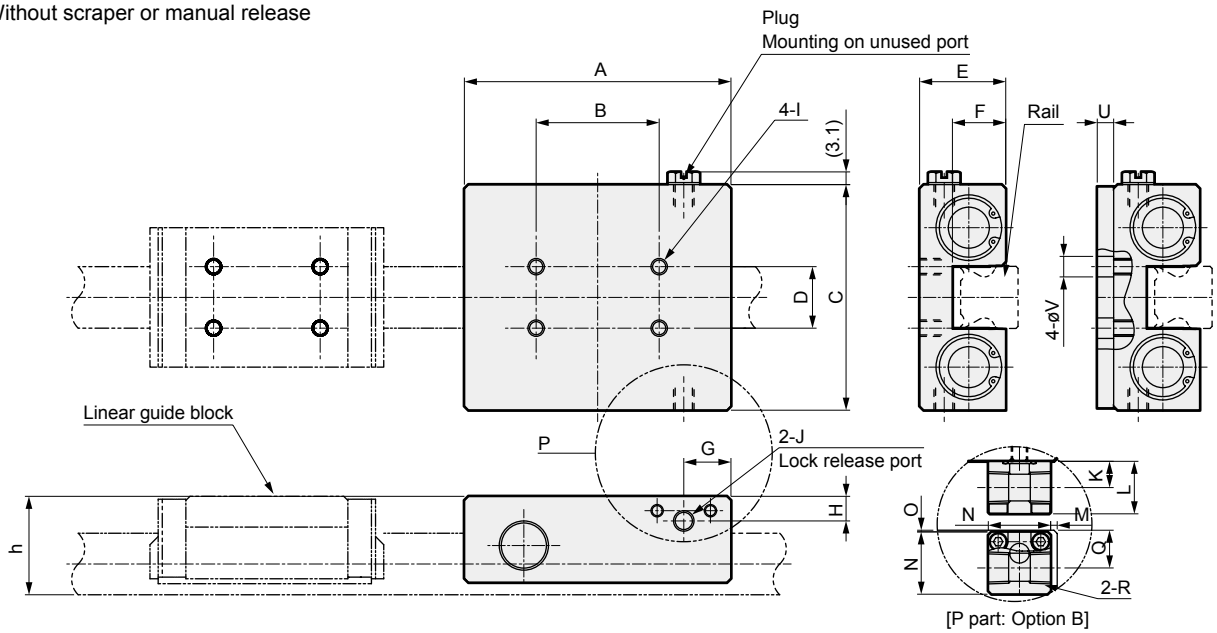

Model No.	A	B	C	D	E	F	G	H	I	J	K	L	M	N	O	Q	R	U	V
LML-*-15	65	30	55	15	21	13	11.5	6	M4 depth 5	M5	8	16	2	19	0.5	11.5	Rc1/8	4	5
LML-*-20	70	30	66	20	24.5	13.5	12	6	M5 depth 6	M5	8	16	2.5	19	0.5	11.5	Rc1/8	-	-
LML-*-25	75	30	75	20	29	16	10	6	M6 depth 7	M5	8	16	0.5	19	0.5	11.5	Rc1/8	4	7
LML-*-30	82	30	88	25	35.5	20.5	12	6.5	M6 depth 9	M5	8	16	2.5	19	1	12	Rc1/8	3	7
LML-*-35	90	40	102	30	40	22	12	7	M8 depth 9	M5	8	16	2.5	19	1.5	12.5	Rc1/8	7	9

*1: h dimensions differ depending on the guide used. Refer to the corresponding catalog.
*2: Dimensions for U and V are only for HSR/SHS-R/LR (manufactured by THK Co., Ltd.) or MHD(G)/LWHD(G) (manufactured by Nippon Thompson Co., Ltd.).

● Without scraper, with manual release

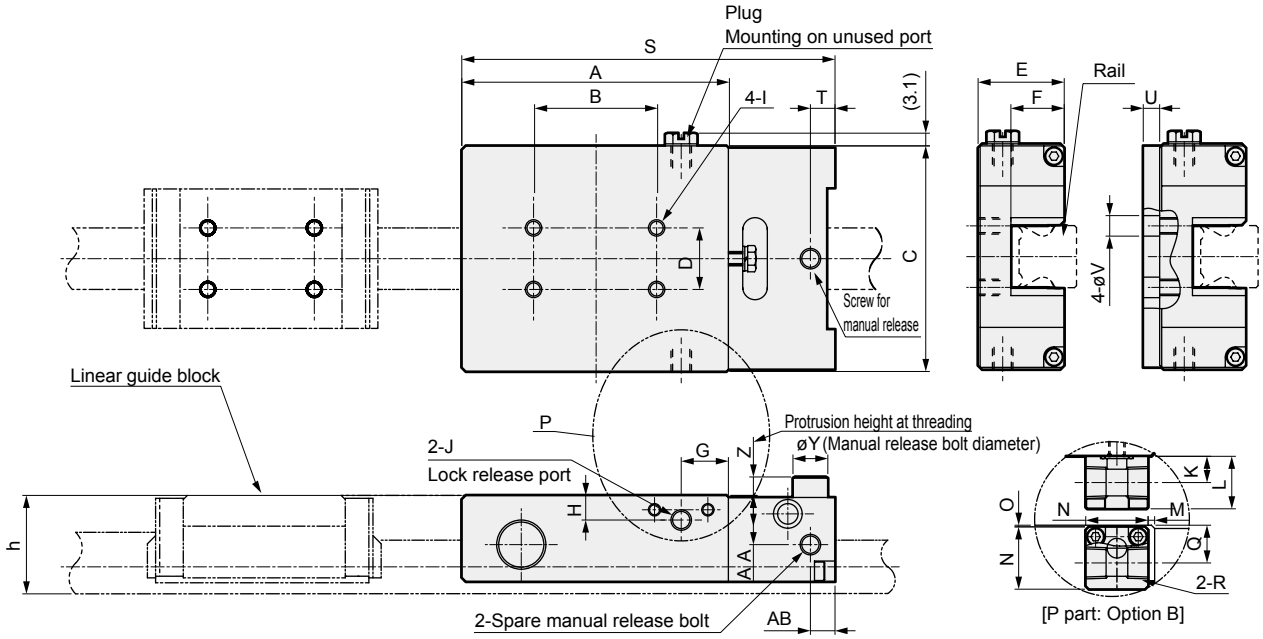

Model No.	A	B	C	D	E	F	G	H	I	J	K	L	M	N	O	Q	R	S	T	U	V	Y	Z	AA	AB
LML-*-15-*-H	65	30	55	15	21	13	11.5	6	M4 depth 5	M5	8	16	2	19	0.5	11.5	Rc1/8	91	6	4	5	8.5	4.5	12	6
LML-*-20-*-H	70	30	66	20	24.5	13.5	12	6	M5 depth 6	M5	8	16	2.5	19	0.5	11.5	Rc1/8	98	6.5	-	-	8.5	4.5	15.5	6
LML-*-25-*-H	75	30	75	20	29	16	10	6	M6 depth 7	M5	8	16	0.5	19	0.5	11.5	Rc1/8	105	6.5	4	7	10	5.5	19	7
LML-*-30-*-H	82	30	88	25	35.5	20.5	12	6.5	M6 depth 9	M5	8	16	2.5	19	1	12	Rc1/8	117	8.5	3	7	10	5.5	25.5	9
LML-*-35-*-H	90	40	102	30	40	22	12	7	M8 depth 9	M5	8	16	2.5	19	1.5	12.5	Rc1/8	130	9.5	7	9	13	7.5	30	10

*1: h dimensions differ depending on the guide used. Refer to the corresponding catalog.
*2: Dimensions for U and V are only for HSR/SHS-R/LR (manufactured by THK Co., Ltd.) or MHD(G)/LWHD(G) (manufactured by Nippon Thompson Co., Ltd.).

LCM
LCR
LCG
LCW
LCX
STM
STG
STS/STL
STR2
UCA2
ULK*
JSK/M2
JSG
JSC3/JSC4
USSD
UFCD
USC
UB
JSB3
LMB
LML
HCM
HCA
LBC
CAC4
UCAC2
CAC-N
UCAC-N
RCS2
RCC2
PCC
SHC
MCP
GLC
MFC
BBS
RRC
GRC
RV3*
NHS
HRL
LN
Hand
Chuk
MecHnd/Chuk
ShkAbs
FJ
FK
SpdContr
Ending

Dimensions

● With scraper, without manual release

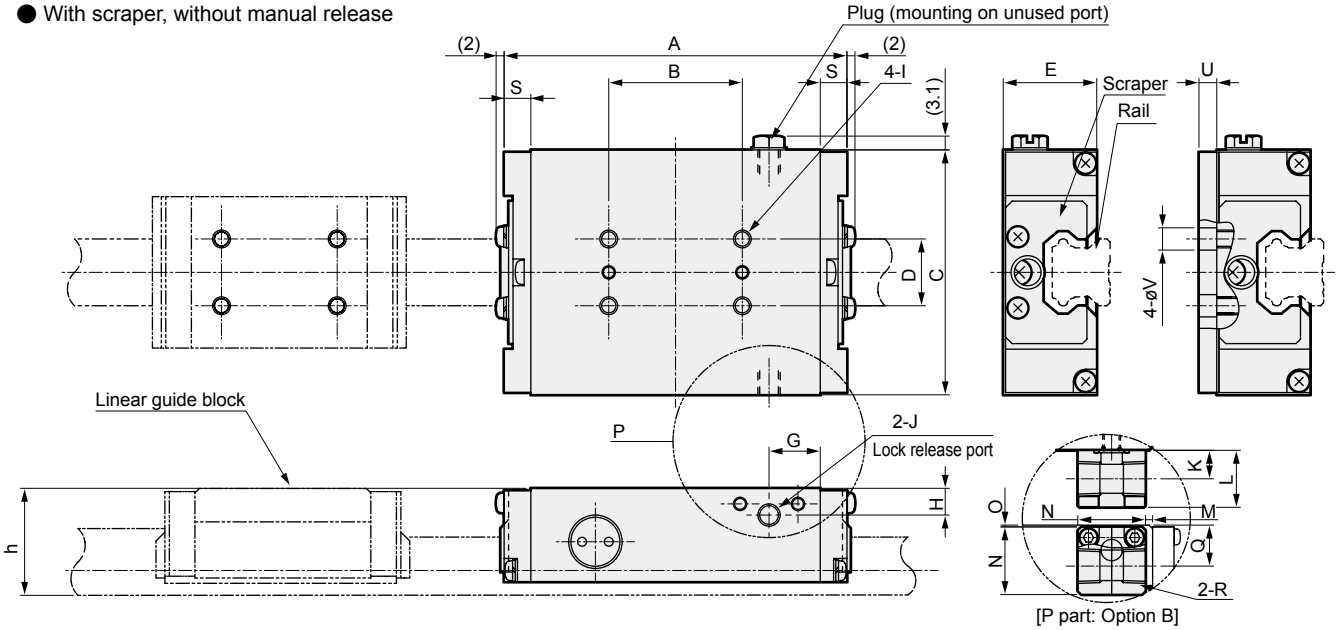

Model No.	A	B	C	D	E	G	H	I	J	K	L	M	N	O	Q	R	S	U	V
LML-G-*-15	77	30	55	15	21	11.5	6	M4 depth 5	M5	8	16	2	19	0.5	11.5	Rc1/8	6	4	5
LML-G-*-20	82	30	66	20	24.5	12	6	M5 depth 6	M5	8	16	2.5	19	0.5	11.5	Rc1/8	6	-	-
LML-G-*-25	87	30	75	20	29	10	6	M6 depth 7	M5	8	16	0.5	19	0.5	11.5	Rc1/8	6	4	7
LML-G-*-30	100	30	88	25	35.5	12	6.5	M6 depth 9	M5	8	16	2.5	19	1	12	Rc1/8	9	3	7
LML-G-*-35	108	40	102	30	40	12	7	M8 depth 9	M5	8	16	2.5	19	1.5	12.5	Rc1/8	9	7	9

*1: h dimensions differ depending on the guide used. Refer to the corresponding catalog.
*2: Dimensions for U and V are only for HSR/SHS-R/LR (manufactured by THK Co., Ltd.) or MHD(G)/LWHD(G) (manufactured by Nippon Thompson Co., Ltd.).

● With scraper and manual release

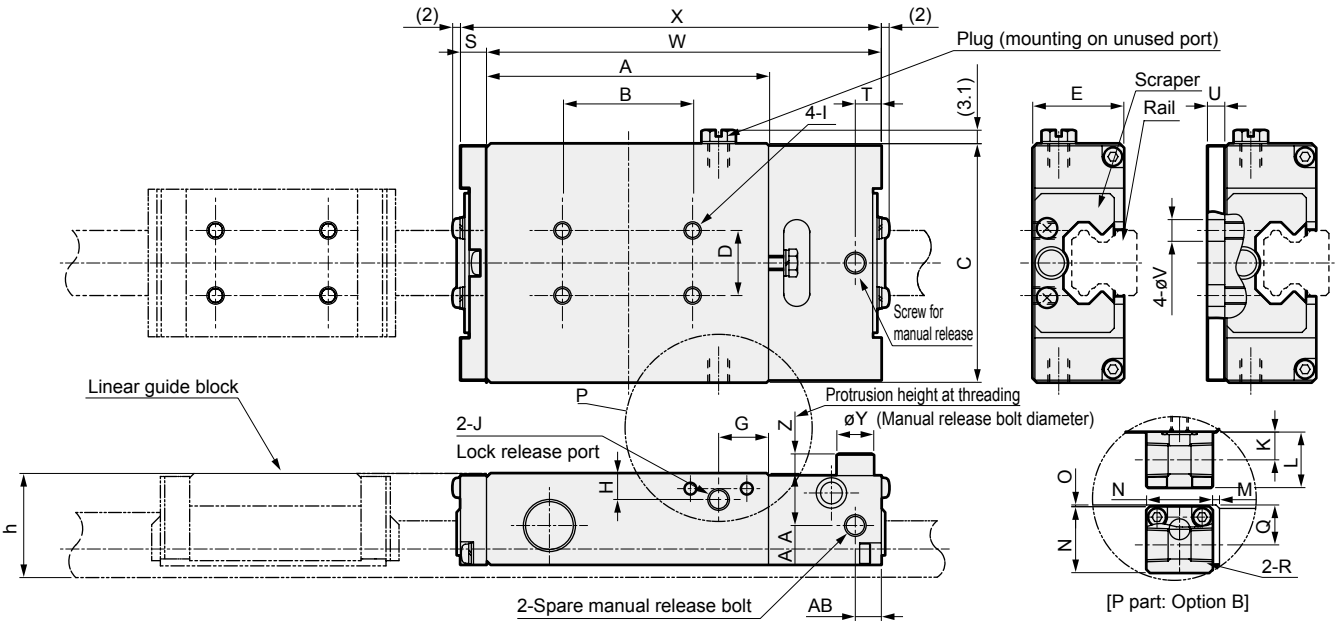

Model No.	A	B	C	D	E	G	H	I	J	K	L	M	N	O	Q	R	S	T	U	V	W	X	Y	Z	AA	AB
LML-G-*-15-*-H	65	30	55	15	21	11.5	6	M4 depth 5	M5	8	16	2	19	0.5	11.5	Rc1/8	6	6	4	5	91	97	8.5	4.5	12	6
LML-G-*-20-*-H	70	30	66	20	24.5	12	6	M5 depth 6	M5	8	16	2.5	19	0.5	11.5	Rc1/8	6	6.5	-	-	98	104	8.5	4.5	15.5	6
LML-G-*-25-*-H	75	30	75	20	29	10	6	M6 depth 7	M5	8	16	0.5	19	0.5	11.5	Rc1/8	6	6.5	4	7	105	111	10	5.5	19	7
LML-G-*-30-*-H	82	30	88	25	35.5	12	6.5	M6 depth 9	M5	8	16	2.5	19	1	12	Rc1/8	9	8.5	3	7	117	126	10	5.5	25.5	9
LML-G-*-35-*-H	90	40	102	30	40	12	7	M8 depth 9	M5	8	16	2.5	19	1.5	12.5	Rc1/8	9	9.5	7	9	130	139	13	7.5	30	10

*1: h dimensions differ depending on the guide used. Refer to the corresponding catalog.
*2: Dimensions for U and V are only for HSR/SHS-R/LR (manufactured by THK Co., Ltd.) or MHD(G)/LWHD(G) (manufactured by Nippon Thompson Co., Ltd.).

High speed cylinder

	Page
Series variation	954
High energy absorption cylinder **HCM** Series	957
High speed cylinder **HCA** Series	975

LCM
LCR
LCG
LCW
LCX
STM
STG
STS/STL
STR2
UCA2
ULK*
JSK/M2
JSG
JSC3/JSC4
USSD
UFCD
UFCD
UB
JSB3
LMB
LML
HCM
HCA
LBC
CAC4
UCAC2
CAC-N
UCAC-N
RCS2
RCC2
PCC
SHC
MCP
GLC
MFC
BBS
RRC
GRC
RV3*
NHS
HRL
LN
Hand
Chuk
MecHnd/Chuk
ShkAbs
FJ
FK
SpdContr
Ending

High energy absorption cylinder HCM Series

Variation	Model No. JIS symbol	Bore size (mm)	Standard stroke (mm)																
			200	250	300	350	400	450	500	550	600	650	700	750	800	850	900	950	
Double acting/ single rod	HCM	ø20/ø25/ø32	●	●	●	●	●	●	●	●	●	●	●						
		ø40/ø50/ø63	●	●	●	●	●	●	●	●	●	●	●	●	●	●	●	●	

High speed cylinder HCA Series

Variation	Model No. JIS symbol	Bore size (mm)	Standard stroke (mm)									
			400	450	500	550	600	650	700	750	800	
Double acting/ single rod	HCA	ø20/ø25/ø32	●	●	●	●	●	●	●			
		ø40/ø50/ø63 ø80/ø100	●	●	●	●	●	●	●	●	●	

Note : Bore size ø25, ø63, ø80, and ø100 are made-to-order products.

●: Standard, ◎: Option, ▒ : Not available

	1000	Min. stroke (mm) *1	Max. stroke (mm)	Custom stroke (per mm)	Mounting: Basic 00	Mounting: Axial foot LB	Mounting: Rod side flange FA	Mounting: Head side flange FB	Cushion: Both sides cushioned B	Cushion: Rod side cushioned R	Cushion: Head side cushioned H	Cushion: Without cushion N	Option: Switch rail attached at shipment Q	Option: Piston rod material (stainless steel) M	Accessory: Rod eye I	Accessory: Rod clevis Y	Switch	Page
		1	700	1	●	●	●	●	●	●	●	●	◎	◎	◎	◎	◎	957
	●		1000															

●: Standard, ◎: Option, ▒ : Not available

Stroke (mm)					Min. stroke (mm) *1	Max. stroke (mm)	Custom stroke (mm)	Mounting: Basic 00	Mounting: Axial foot LB	Mounting: Rod side flange FA	Mounting: Head side flange FB	Cushion: Both sides cushioned B	Cushion: Rod side cushioned R	Cushion: Head side cushioned H	Cushion: Without cushion N	Switch	Page
	850	900	950	1000													
					1	700	1	●	●	●	●	●	●	●	●	◎	975
	●	●	●	●		1000		●	●	●	●	●	●	●	●	◎	

*1:The stroke is available from 1 mm. However, this product's cushion area is longer than a typical cylinder, allowing high absorbed energy. Therefore, at the stroke below or less, the cushion is usually applied, and the effects of high-speed use cannot be obtained.

Model No.	Stroke at which high-speed effects cannot be obtained	Recommended stroke
HCM	150 mm stroke or less	300 mm stroke or more
HCA	200 mm stroke or less	400 mm stroke or more

HCM

High energy absorption cylinder

ø20/ø25/ø32/ø40/ø50/ø63

High speed

Overview

This is a high speed (2000 mm/s) and high energy absorbing cylinder. This can be used for mold ejection of resins, etc.

Features

New cushion mechanism adopted
Smooth stop at the stroke end.

Meets wide range of conditions
Easy adjustment mechanism.

Excellent properties in heavy load and medium speed range.
Five times higher impact absorption than conventional cylinder.

Floating method provided for cushion packing
Eliminates popping out caused by cracking pressure at starting.

Switch integrated in rail realizes simple appearance.
Direct mount and easy maintenance realized by 4 bolts.

CONTENTS

Series variation	954
Variation and option combination selection table	958
Operational principle and application examples	959
● Double acting/single rod (HCM)	960
HCM accessory dimensions	969
Selection guide	970
⚠ Safety precautions	974

The cylinder switches T2YH, T2YV, T3YH, and T3YV are scheduled for end of production at the end of December 2023.

LCM
LCR
LCG
LCW
LCX
STM
STG
STS/STL
STR2
UCA2
ULK*
JSK/M2
JSG
JSC3/JSC4
USSD
UFCD
UFCD
UB
JSB3
LMB
LML
HCM
HCA
LBC
CAC4
UCAC2
CAC-N
UCAC-N
RCS2
RCC2
PCC
SHC
MCP
GLC
MFC
BBS
RRC
GRC
RV3*
NHS
HRL
LN
Hand
Chuk
MecHnd/Chuk
ShkAbs
FJ
FK
SpdContr
Ending

Variation and option combination selection table

◎ : Option
○ : Available (made-to-order product)
△ : Available depending on conditions (Contact CKD.)
× : Not available

Category		Category	Variation			Port thread			Option		
			Double acting basic	With cylinder switch		NPT	G		Switch rail attached at shipment	Piston rod material stainless steel	Specify piston rod end form
		Code	None	None		N	G		Q	M	N*
Variation	Double acting basic	Blank		◎		○	○		×	◎	○
Variation	With cylinder switch	Blank				○	○		◎	◎	○
Port thread	NPT	N					×		○	○	○
Port thread	G	G							○	○	○
Option	Switch rail attached at shipment	Q								◎	○
Option	Piston rod material stainless steel *1	M									○
Option	Specify piston rod end form	N*									
Accessory	Cylinder switch	Listed separately	◎	◎		○	○		◎	◎	○
Accessory	Rod eye	I	◎	◎		○	○		◎	◎	△
Accessory	Rod clevis	Y	◎	◎		○	○		◎	◎	△

*1 : ø20 and ø25 are piston rod material SUS as standard. Only ø32 to ø63 are available as an option.

[Example of model No.]

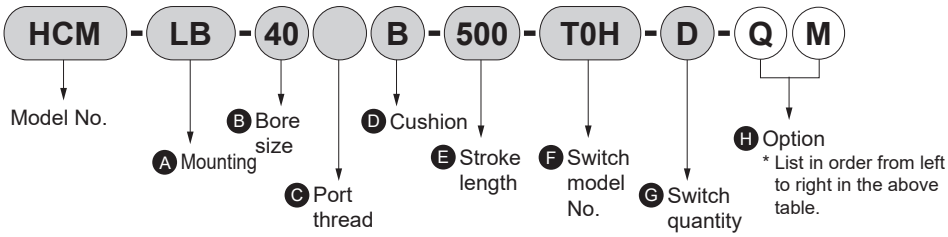

Model No.: High energy absorption cylinder
●Variation : Double acting/basic
Ⓐ Mounting : Axial foot
Ⓑ Bore size : ø40 mm
Ⓒ Port thread : Rc thread
Ⓓ Cushion : Both sides cushioned
Ⓔ Stroke : 500 mm
Ⓕ Switch model No.: Reed T0H switch, lead wire 1 m
Ⓖ Switch quantity : 2
Ⓗ Option : Switch rail attached at shipment, piston rod material (stainless steel)

Cushion operational principle

(1) When the piston operates and the cushion ring rushes into the cushion packing, an airtight space is formed in the ▒. As the piston moves further, the air in the ▒ is compressed, absorbing the kinetic energy in the operating direction.

● Before rush into cushion

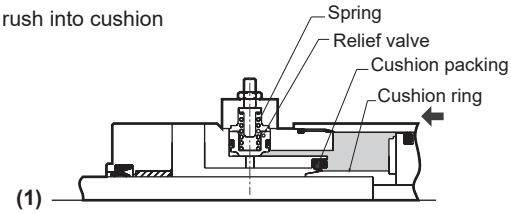

(2) The relief valve is opened by compressed air at the same time. Compressed air is instantaneously discharged and the relief valve closes.

● Cushion operation I

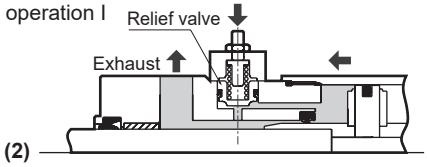

(3) After the relief valve closes, the remaining compressed air is exhausted from the slit orifice. The piston moves and contacts the cover. The energy absorption stroke is completed at this time.

● Cushion operation II

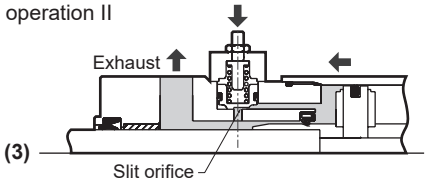

Applications

● Resin molding machine ejection robot

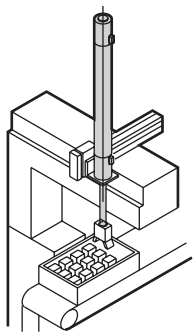

● Machine door open/close

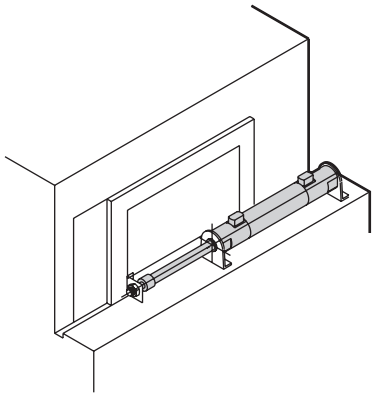

High energy absorption cylinder Double acting/single rod

HCM Series

● Bore size: ø20/ø25/ø32/ø40/ø50/ø63

JIS symbol

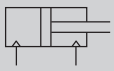

RoHS CAD

Specifications

Item		HCM					
Bore size	mm	ø20	ø25	ø32	ø40	ø50	ø63
Actuation		Double acting					
Working fluid		Compressed air					
Max. working pressure	MPa	1.0 (≈150 psi, 10 bar)					
Min. working pressure	MPa	0.15 (≈22 psi, 1.5 bar)					
Proof pressure	MPa	1.6 (≈230 psi, 16 bar)					
Ambient temperature	°C	-10 (14°F) to 60 (140°F) (no freezing)					
Port size		Rc1/8	Rc1/8	Rc1/4	Rc1/4	Rc3/8	Rc3/8
Stroke tolerance	mm	$^{+2.0}_{0}$					
Working piston speed	mm/s	50 to 2000 (Operate within the allowable absorbed energy.)					
Cushion		With air cushion					
Lubrication		Not required (use turbine oil class 1 ISO VG32 if necessary for lubrication)					
Max absorbed energy J *1 With air cushion		3	5	9	14	23	30
Effective air cushion length	mm	56.5	56.5	56.5	55.5	58.5	58.5

*1 : If kinetic energy exceeds these values, consider using a separate shock absorber.
Refer to pages 970 to 973 for energy calculation and size selection.

Stroke

Bore size (mm)	Standard stroke (mm)	Max. stroke (mm)	Min. stroke (mm)
ø20	200 to 700	700	1
ø25			
ø32			
ø40	200 to 1000	1000	
ø50			
ø63			

*1 : The custom stroke is available in 1 mm increments.
*2 : Consult with CKD about strokes other than the above.
*3 : The stroke is available from 1 mm. However, this product's cushion area is longer than a typical cylinder, allowing high absorbed energy. Therefore, at the stroke below or less, the cushion is usually applied, and the effects of high-speed use cannot be obtained.

Model No.	Stroke at which high-speed effects cannot be obtained	Recommended stroke
HCM	150 mm stroke or less	300 mm stroke or more

Number of installed switches and min. stroke (mm)

Switch quantity	1		2		3		4		5	
Bore size (mm)	Proximity	Reed	Proximity	Reed	Proximity	Reed	Proximity	Reed	Proximity	Reed
ø20	10		25		40	50	55		75	85
ø25	10		25		40	50	55		75	85
ø32	10		25		40	50	55		75	85
ø40	10		25		40	50	55		75	85
ø50	10		25		40	50	55		75	85
ø63	10		25		40	50	55		75	85

LCM
LCR
LCG
LCW
LCX
STM
STG
STS/STL
STR2
UCA2
ULK*
JSK/M2
JSG
JSC3/JSC4
USSD
UFCD
USC
UB
JSB3
LMB
LML
HCM
HCA
LBC
CAC4
UCAC2
CAC-N
UCAC-N
RCS2
RCC2
PCC
SHC
MCP
GLC
MFC
BBS
RRC
GRC
RV3*
NHS
HRL
LN
Hand
Chuk
MecHnd/Chuk
ShkAbs
FJ
FK
SpdContr
Ending

Switch specifications

● 1-color/2-color LED/for AC magnetic field proof

Item	Proximity 2-wire	Proximity 2-wire			Proximity 3-wire				Reed 2-wire							Proximity 2-wire
	T1H/ T1V	T2H/T2V/ T2JH/ T2JV	T2YH/ T2YV	T2WH/ T2WV	T3H/ T3V	T3PH/ T3PV	T3YH/ T3YV	T3WH/ T3WV	T0H/T0V		T5H/T5V		T8H/T8V			T2YD(*4) T2YDT
Applications	For programmable controller, relay, compact solenoid valve	Dedicated for programmable controller			For programmable controller, relay				For programmable controller, relay		For programmable controller, relay, IC circuit (no indicator lamp), serial connection		For programmable controller, relay			For programmable controller
Output method	-				NPN output	PNP output	NPN output	NPN output	-							
Pwr. supp. V.	-				10 to 28 VDC				-							
Load voltage	85 to 265 VAC	10 to 30 VDC		24 VDC ±10%	30 VDC or less				12/24 VDC	100/110 VAC	5/12/24 VDC	100/110 VAC	12/24 VDC	110 VAC	220 VAC	24 VDC ±10%
Load current	5 to 100 mA	5 to 20 mA (*3)			100 mA or less		50 mA or less		5 to 50 mA	7 to 20 mA	≤50 mA	≤20 mA	5 to 50 mA	7 to 20 mA	7 to 10 mA	5 to 20 mA
Indicator lamp	LED (Lit when ON)	LED (Lit when ON)	Red/green LED (Lit when ON)	Red/green LED (Lit when ON)	LED (Lit when ON)	Yellow LED (Lit when ON)	Red/green LED (Lit when ON)	Red/green LED (Lit when ON)	LED (Lit when ON)		Without LED		LED (Lit when ON)			Red/green LED (Lit when ON)
Leakage current	≤ 1 mA at 100 VAC, ≤ 2 mA at 200 VAC	1 mA or less			10 μA or less				0 mA							1 mA or less
Weight g	1 m:33 3 m:87 5 m:142	1 m:18 3 m:49 5 m:80	1 m:33 3 m:87 5 m:142	1 m:18 3 m:49 5 m:80	1 m:18 3 m:49 5 m:80		1 m:33 3 m:87 5 m:142	1 m:18 3 m:49 5 m:80	1 m:18 3 m:49 5 m:80				1 m:33 3 m:87 5 m:142			1 m:61 3 m:166 5 m:272

*1 : Refer to Ending Page 1 for detailed switch specifications and dimensions.
*2 : Switches other than the above models, such as switches with connectors, are also available. Refer to Ending Page 1.
*3 : The max. load current is 20 mA at 25°C. The current is lower than 20 mA if the operating ambient temperature around the switch is higher than 25˚C. (5 to 10 mA at 60°C)
*4 : AC magnetic field proof switch (T2YD/T2YDT) cannot be used in DC magnetic fields.

Cylinder weight

(Unit: kg)

Bore size (mm)			ø20	ø25	ø32	ø40	ø50	ø63
Product weight for 0 mm stroke	Basic	00	0.33	0.47	0.62	0.98	1.58	2.27
	Axial foot	LB	0.44	0.6	0.78	1.2	2.06	2.99
	Flange	FA/FB	0.36	0.51	0.68	1.06	1.92	2.77
Switch weight (per 1 pc.)			Refer to the weight indicated in the switch specifications.					
Additional weight per stroke without switch rail 100 mm			0.012	0.016	0.017	0.027	0.040	0.044
Additional weight per stroke with switch rail 100 mm			0.014	0.018	0.019	0.029	0.042	0.046

[Example of calculation]
Product weight of HCM-LB-40B-500-T2H-D

Product weight for stroke 0 mm: 1.2 kg
Additional weight for stroke 500 mm: $0.029 \times \frac{500}{100} = 0.145$ kg
Weight of 2 switches: 0.018x2 = 0.036 kg
Product weight: 1.2 + 0.145 + 0.036 = 1.381 kg

Theoretical thrust table

(Unit: N)

Bore size (mm)	Operating direction	Working pressure MPa 0.15	0.2	0.3	0.4	0.5	0.6	0.7	0.8	0.9	1.0
ø20	Push	47.1	62.8	94.2	1.26×10^2	1.57×10^2	1.88×10^2	2.20×10^2	2.51×10^2	2.83×10^2	3.14×10^2
	Pull	35.3	47.1	70.7	94.2	1.18×10^2	1.41×10^2	1.65×10^2	1.88×10^2	2.12×10^2	2.36×10^2
ø25	Push	73.6	98.2	1.47×10^2	1.96×10^2	2.45×10^2	2.95×10^2	3.44×10^2	3.93×10^2	4.42×10^2	4.91×10^2
	Pull	56.7	75.6	1.13×10^2	1.51×10^2	1.89×10^2	2.27×10^2	2.64×10^2	3.02×10^2	3.40×10^2	3.78×10^2
ø32	Push	1.21×10^2	1.61×10^2	2.41×10^2	3.22×10^2	4.02×10^2	4.83×10^2	5.63×10^2	6.43×10^2	7.24×10^2	8.04×10^2
	Pull	1.04×10^2	1.38×10^2	2.07×10^2	2.76×10^2	3.46×10^2	4.15×10^2	4.84×10^2	5.53×10^2	6.22×10^2	6.91×10^2
ø40	Push	1.88×10^2	2.51×10^2	3.77×10^2	5.03×10^2	6.28×10^2	7.54×10^2	8.80×10^2	1.01×10^3	1.13×10^3	1.26×10^3
	Pull	1.58×10^2	2.11×10^2	3.17×10^2	4.22×10^2	5.28×10^2	6.33×10^2	7.39×10^2	8.44×10^2	9.50×10^2	1.06×10^3
ø50	Push	2.95×10^2	3.93×10^2	5.89×10^2	7.85×10^2	9.82×10^2	1.18×10^3	1.37×10^3	1.57×10^3	1.77×10^3	1.96×10^3
	Pull	2.47×10^2	3.30×10^2	4.95×10^2	6.60×10^2	8.25×10^2	9.90×10^2	1.15×10^3	1.32×10^3	1.48×10^3	1.65×10^3
ø63	Push	4.68×10^2	6.23×10^2	9.35×10^2	1.25×10^3	1.56×10^3	1.87×10^3	2.18×10^3	2.49×10^3	2.81×10^3	3.12×10^3
	Pull	4.20×10^2	5.61×10^2	8.41×10^2	1.12×10^3	1.40×10^3	1.68×10^3	1.96×10^3	2.24×10^3	2.52×10^3	2.80×10^3

LCM
LCR
LCG
LCW
LCX
STM
STG
STS/STL
STR2
UCA2
ULK*
JSK/M2
JSG
JSC3/JSC4
USSD
UFCD
UFCD
UB
JSB3
LMB
LML
HCM
HCA
LBC
CAC4
UCAC2
CAC-N
UCAC-N
RCS2
RCC2
PCC
SHC
MCP
GLC
MFC
BBS
RRC
GRC
RV3*
NHS
HRL
LN
Hand
Chuk
MecHnd/Chuk
ShkAbs
FJ
FK
SpdContr
Ending

How to order

Without switch (built-in magnet for switch)

HCM - LB - 40 B - 500 — I

With switch (built-in magnet for switch)

HCM - LB - 40 B - 500 - T2H* - D - Q I

Ⓐ Mounting *1

Ⓑ Bore size

Ⓒ Port thread

Ⓓ Cushion

Ⓔ Stroke

Ⓕ Switch model No. *2

Ⓖ Switch quantity

Ⓗ Option

Ⓘ Accessory *3

Code	Description
Ⓐ Mounting	
00	Basic
LB	Axial foot
FA	Rod side flange
FB	Head side flange

Ⓑ Bore size (mm)	
20	ø20
25	ø25
32	ø32
40	ø40
50	ø50
63	ø63

Ⓒ Port thread	
Blank	Rc thread
N	NPT thread(made-to-order product)
G	G thread (made-to-order product)

Ⓓ Cushion	
B	Both sides cushioned
R	Rod side cushioned
H	Head side cushioned
N	Without cushion

Ⓔ Stroke (mm)

Bore size	Stroke	Custom stroke
ø20 to ø32	1 to 700	In 1 mm increments
ø40 to ø63	1 to 1000	

Ⓕ Switch model No.

Axial lead wire	Radial lead wire	Contact	Voltage AC	Voltage DC	Indicator	Lead wire
T0H*	T0V*	Reed	●	●	1-color LED	2-wire
T5H*	T5V*	Reed	●	●	Without LED	2-wire
T8H*	T8V*	Reed	●	●	1-color LED	2-wire
T1H*	T1V*	Proximity	●		1-color LED	2-wire
T2H*	T2V*	Proximity		●	1-color LED	2-wire
T3H*	T3V*	Proximity		●	1-color LED	3-wire
T3PH*	T3PV*	Proximity		●	1-color LED	3-wire
T2WH*	T2WV*	Proximity		●	2-color LED	2-wire
T2YH*	T2YV*	Proximity		●	2-color LED	2-wire
T3WH*	T3WV*	Proximity		●	2-color LED	3-wire
T3YH*	T3YV*	Proximity		●	2-color LED	3-wire
T2YD*	-	Proximity		●	Strong magn field proof (For AC magnetic field)	2-wire
T2YDT*	-	Proximity		●	Strong magn field proof (For AC magnetic field)	2-wire
T2JH*	T2JV*	Proximity		●	Off-delay	2-wire

*** Lead wire length**	
Blank	1 m (standard)
3	3 m (option)
5	5 m (option)

Ⓖ Switch quantity	
R	1 on rod side
H	1 on head side
D	2
T	3
4	4
5	5

Ⓗ Option	
Q	Switch rail attached at shipment
M	Piston rod material (stainless steel)

Ⓘ Accessory	
I	Rod eye
Y	Rod clevis (pin and snap ring attached)

⚠ Precautions for model No. selection

*1 : Mounting bracket will be shipped with the product.
*2 : Switches other than ⒻSwitch model No. are also available.
(Made to order) Refer to Ending Page 1 for details.
*3 : "I" and "Y" cannot be selected together.

[Example of model No.]

HCM-LB-40B-500-T2H-D-QI

Model: High energy absorption cylinder double acting

Ⓐ Mounting : Axial foot
Ⓑ Bore size : ø40 mm
Ⓒ Port thread : Rc thread
Ⓓ Cushion : Both sides cushioned
Ⓔ Stroke : 500 mm
Ⓕ Switch model No.: Proximity T2H switch, lead wire 1 m
Ⓖ Switch quantity : 2
Ⓗ Option : Switch rail attached at shipment
Ⓘ Accessory : Rod eye

How to order switch

● Switch body + mounting rail set

HCM - T0H - D - 40 - 100

- T0H: Switch model No. (Item ❻ on page 962)
- D: Switch quantity (Item ❻ on page 962)
- 40: Bore size (Item ❸ on page 962)
- 100: Stroke (Item ❺ on page 962) (*1)

● Mounting rail only

HCM - T - 40 - 100

- T: Mounting rail
- 40: Bore size (Item ❸ on page 962)
- 100: Stroke (Item ❺ on page 962) (*1) (*2)

● Switch only

SW - T0H

- T0H: Switch model No. (Item ❻ on page 962)

*1 : Indicate x if the stroke exceeds 300 mm. If exceeding 300 mm, a short rail (with 100 mm switch adjustment travel distance) will be included per switch.
*2 : If indicating X when ordering mounting rails only, order the same number of rails as that of applicable switches.

Mounting bracket model No.

Bore size / Mounting	Foot (LB)	Flange (FA/FB)
ø20	HCM-LB-20	HCM-FA-20
ø25	HCM-LB-25	HCM-FA-25
ø32	HCM-LB-32	HCM-FA-32
ø40	HCM-LB-40	HCM-FA-40
ø50	HCM-LB-50	HCM-FA-50
ø63	HCM-LB-63	HCM-FA-63

*1 : The foot mounting bracket is provided as 2 pcs./set.

LCM
LCR
LCG
LCW
LCX
STM
STG
STS/STL
STR2
UCA2
ULK*
JSK/M2
JSG
JSC3/JSC4
USSD
UFCD
UFCD
UB
JSB3
LMB
LML
HCM
HCA
LBC
CAC4
UCAC2
CAC-N
UCAC-N
RCS2
RCC2
PCC
SHC
MCP
GLC
MFC
BBS
RRC
GRC
RV3*
NHS
HRL
LN
Hand
Chuk
MecHnd/Chuk
ShkAbs
FJ
FK
SpdContr
Ending

Internal structure and parts list

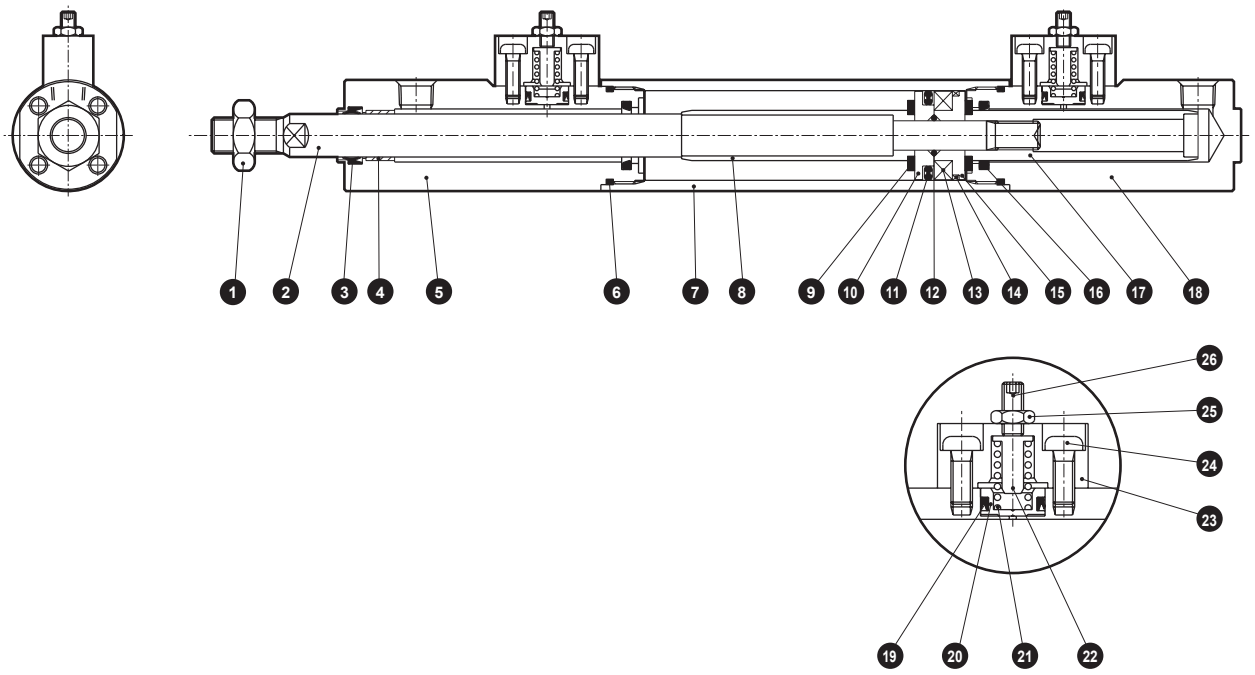

No.	Part name	Material	Remarks	No.	Part name	Material	Remarks
1	Rod nut	Steel	Nickeling	14	Wear ring	Resin	
2	Piston rod	ø20/ø25: Stainless steel ø32 to ø63: Steel	Industrial chrome plating	15	Piston (H)	Aluminum alloy	Chromate treatment
3	Rod packing	Nitrile rubber		16	Cushion packing	ø20 to ø32: Urethane ø40 to ø63: Urethane, steel	
4	Bush	Oil impregnated bearing alloy		17	Cushion ring (H)	Aluminum alloy	Chromate treatment
5	Rod cover	Aluminum alloy	Black alumite	18	Head cover	Aluminum alloy	Black alumite
6	Cylinder gasket	Nitrile rubber		19	Relief valve packing	Nitrile rubber	
7	Cylinder tube	Aluminum alloy	Hard alumite	20	Relief valve	Copper alloy	
8	Cushion ring (R)	Aluminum alloy	Chromate treatment	21	Spring	Steel	Electrodeposition
9	Cushion rubber	Urethane rubber		22	Spring collar	Steel	Chromate treatment
10	Piston (R)	Aluminum alloy	Chromate treatment	23	Relief valve holder	Aluminum alloy	Black alumite
11	Piston packing	Nitrile rubber		24	Cross-recessed pan head machine screw	Steel	Zinc chromate
12	Piston gasket	Nitrile rubber	ø25 to ø63	25	Hexagon nut	Steel	Black finish
13	Magnet	Plastic		26	Hexagon socket set screw	Steel	Black finish

Repair parts list

Bore size (mm)	Kit No.	Repair parts No.
ø 20	HCM-20K	3 6 9 11 14 16 19
ø 25	HCM-25K	
ø 32	HCM-32K	
ø 40	HCM-40K	
ø 50	HCM-50K	
ø 63	HCM-63K	

Note : Specify the kit No. when placing an order.

Material and treatment of mounting bracket

Mounting		Material	Treatment
LB		Steel	Zinc chromate
FA/FB	ø20 to ø40	Aluminum alloy	Black alumite
	ø50/ø63	Steel	Zinc chromate

LCM
LCR
LCG
LCW
LCX
STM
STG
STS/STL
STR2
UCA2
ULK*
JSK/M2
JSG
JSC3/JSC4
USSD
UFCD
USC
UB
JSB3
LMB
LML
HCM
HCA
LBC
CAC4
UCAC2
CAC-N
UCAC-N
RCS2
RCC2
PCC
SHC
MCP
GLC
MFC
BBS
RRC
GRC
RV3*
NHS
HRL
LN
Hand
Chuk
MecHnd/Chuk
ShkAbs
FJ
FK
SpdContr
Ending

Dimensions

CAD

● Basic (00)

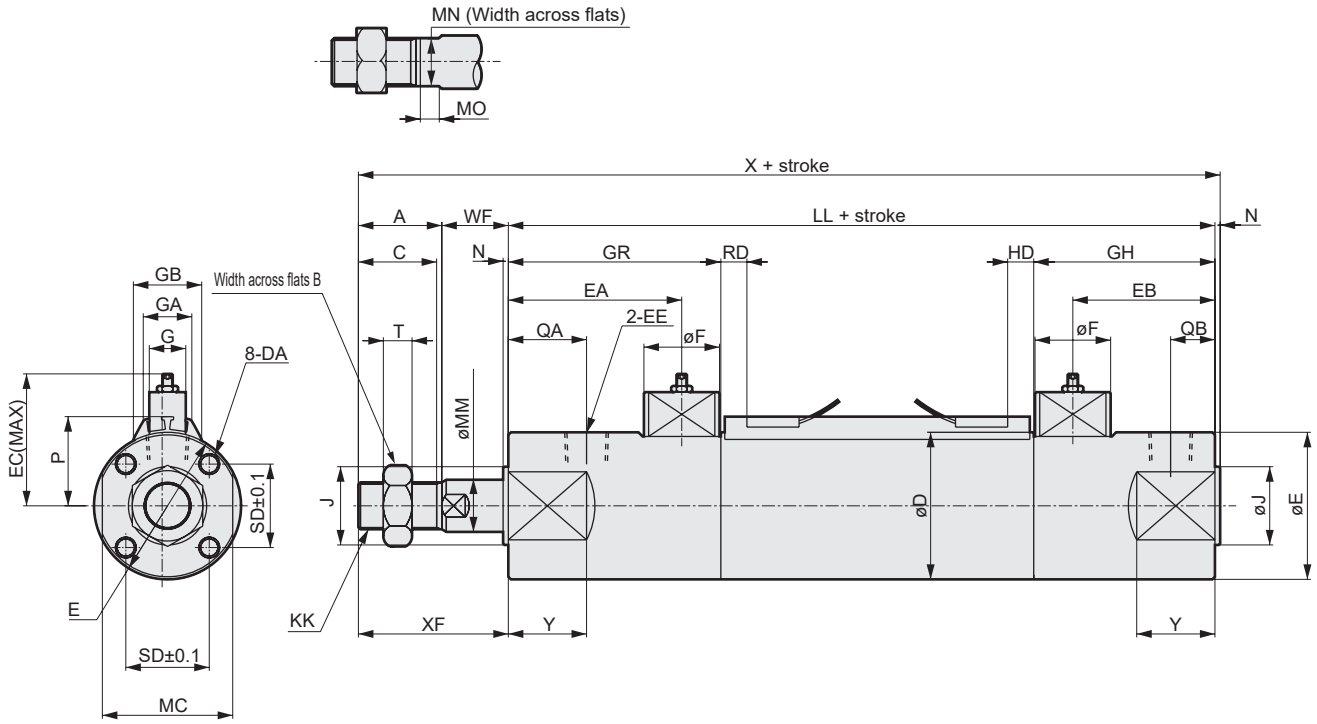

Code / Bore size	A	B	C	D	DA	E	EA	EB	EC	EE	F	G	J	KK	LL	MC	MM	MN	MO	N
ø20	18	13	16	26	M4 depth 8	28	52	43	32.7	Rc1/8	29	14	13	M8	164	24	10	8	5	2
ø25	20	17	18	31	M5 depth 9	31	56.5	47.5	34.5	Rc1/8	29	14	15	M10X1.25	173	27	12	10	6	2
ø32	20	17	18	37	M5 depth 9	37	56.5	47.5	37.8	Rc1/4	29	14	18	M10X1.25	173	32	12	10	6	2
ø40	26	22	24	46	M6 depth 10	46	62	51	47.3	Rc1/4	29	14	25	M14X1.5	186	41	16	14	7	2
ø50	32	27	30	56.4	M8 depth 12	56.4	66.5	54.5	52.6	Rc3/8	29	14	30	M18X1.5	196	50	20	17	8	2
ø63	32	27	30	69.4	M10 depth 15	69.4	66.5	54.5	59.3	Rc3/8	29	14	32	M18X1.5	196	60	20	17	8	2

Code / Bore size	QA	QB	SD	T	WF	X	XF	Y	GR	GH	GA	GB	P	T0/T5/T2/T3		T8		T2W/T3W		T1/T2J/T2Y/T3Y/T2YD	
														RD	HD	RD	HD	RD	HD	RD	HD
ø20	18	10	14	5	15.5	199.5	33.5	20	67	58	18	23	19.5	10	10	4	4	12	12	9	9
ø25	20	10	16.5	6	17	212	37	20	71.5	62.5	18	24.4	22	11	9	5	3	13	11	10	8
ø32	20	12	20	6	17	212	37	28	71.5	62.5	18	25	25	11	9	5	3	13	11	10	8
ø40	26	14	26	8	20.5	234.5	46.5	28	77	66	18	25.7	29.5	13	11	7	5	15	13	12	10
ø50	30	17	32	11	25.5	255.5	57.5	30	81.5	69.5	18	26.2	34.7	14	12	8	6	16	14	13	11
ø63	30	17	38	11	25.5	255.5	57.5	30	81.5	69.5	18	26.5	41.2	14	12	8	6	16	14	13	11

*1 : Tube outer diameter øD and cover outer diameter øE are different for ø20 only.
*2 : For the dimensions of the accessories, refer to page 969.

LCM
LCR
LCG
LCW
LCX
STM
STG
STS/STL
STR2
UCA2
ULK*
JSK/M2
JSG
JSC3/JSC4
USSD
UFCD
UFCD
UB
JSB3
LMB
LML
HCM
HCA
LBC
CAC4
UCAC2
CAC-N
UCAC-N
RCS2
RCC2
PCC
SHC
MCP
GLC
MFC
BBS
RRC
GRC
RV3*
NHS
HRL
LN
Hand
Chuk
MecHnd/Chuk
ShkAbs
FJ
FK
SpdContr
Ending

Dimensions

CAD

● Axial foot (LB)

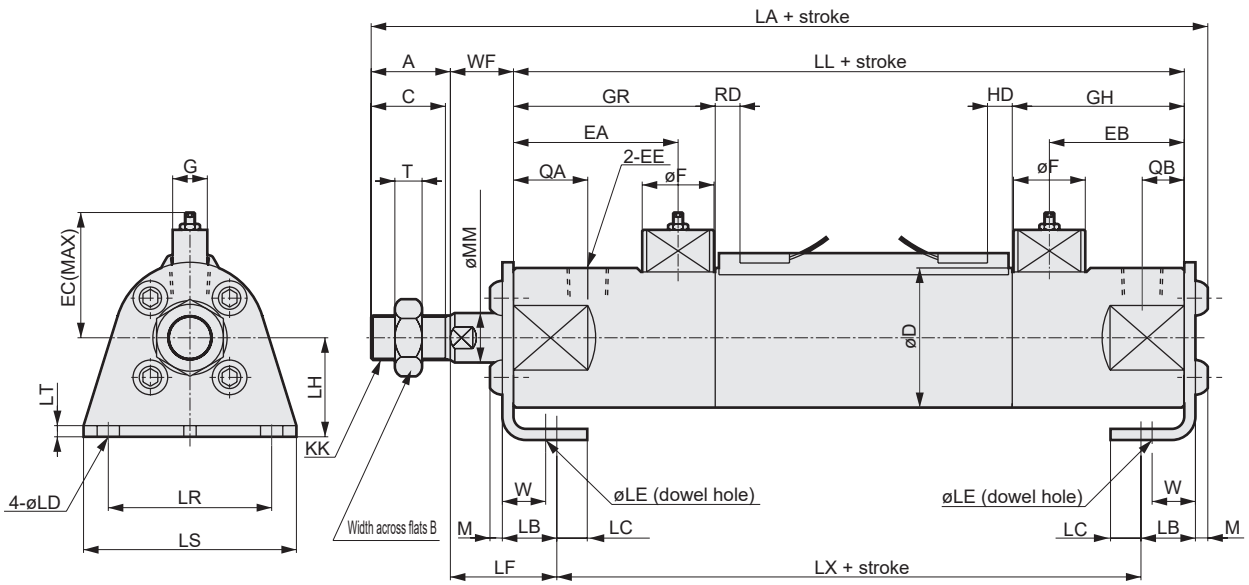

Code / Bore size	A	B	C	D	EA	EB	EC	EE	F	G	KK	LA	LB	LC	LD	LE	LF	LH	LL
ø20	18	13	16	26	52	43	32.7	Rc1/8	29	14	M8	203.3	15.1	7.1	5.7	4	27	20	164
ø25	20	17	18	31	56.5	47.5	34.5	Rc1/8	29	14	M10X1.25	216.6	15.1	7.1	5.7	4	28.9	22	173
ø32	20	17	18	37	56.5	47.5	37.8	Rc1/4	29	14	M10X1.25	216.6	16.1	8.1	6.8	4	29.9	25	173
ø40	26	22	24	46	62	51	47.3	Rc1/4	29	14	M14X1.5	239.7	16.6	9.1	6.8	4	33.9	30	186
ø50	32	27	30	56.4	66.5	54.5	52.6	Rc3/8	29	14	M18X1.5	263	22	11	9	5	43	40	196
ø63	32	27	30	69.4	66.5	54.5	59.3	Rc3/8	29	14	M18X1.5	263	22	13	11	5	43	45	196

Code / Bore size	LR	LS	LT	LX	M	MM	QA	QB	T	W	WF	GR	GH	T0/T5/T2/T3		T8		T2W/T3W		T1/T2J/T2Y/T3Y/T2YD	
														RD	HD	RD	HD	RD	HD	RD	HD
ø20	32	44	3.2	140.2	2.6	10	18	10	5	10	15.5	67	58	10	10	4	4	12	12	9	9
ø25	36	49	3.2	149.2	3.4	12	20	10	6	10	17	71.5	62.5	11	9	5	3	13	11	10	8
ø32	44	58	3.2	147.2	3.4	12	20	12	6	10	17	71.5	62.5	11	9	5	3	13	11	10	8
ø40	54	71	3.2	159.2	4	16	26	14	8	10	20.5	77	66	13	11	7	5	15	13	12	10
ø50	66	86	4.5	161	5	20	30	17	11	17.5	25.5	81.5	69.5	14	12	8	6	16	14	13	11
ø63	82	106	4.5	161	5	20	30	17	11	17.5	25.5	81.5	69.5	14	12	8	6	16	14	13	11

*1 : For the dimensions of the accessories, refer to page 969.

LCM
LCR
LCG
LCW
LCX
STM
STG
STS/STL
STR2
UCA2
ULK*
JSK/M2
JSG
JSC3/JSC4
USSD
UFCD
USC
UB
JSB3
LMB
LML
HCM
HCA
LBC
CAC4
UCAC2
CAC-N
UCAC-N
RCS2
RCC2
PCC
SHC
MCP
GLC
MFC
BBS
RRC
GRC
RV3*
NHS
HRL
LN
Hand
Chuk
MecHnd/Chuk
ShkAbs
FJ
FK
SpdContr
Ending

Dimensions

● Rod side flange (FA)

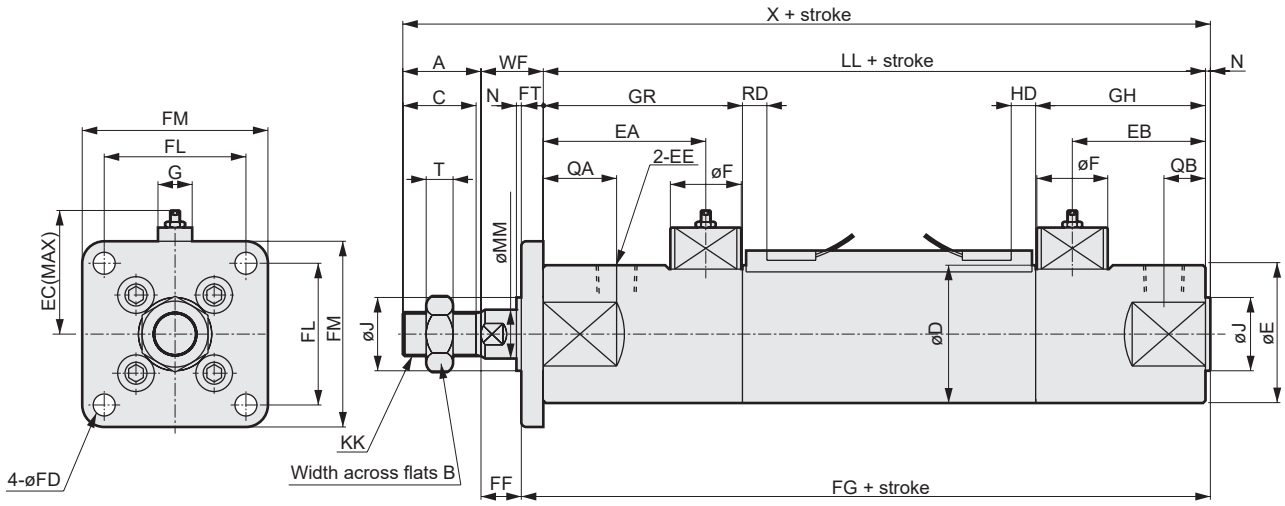

Code / Bore size	A	B	C	D	E	EA	EB	EC	EE	F	FD	FF	FG	FL	FM	FT	G	J	KK	LL
ø20	18	13	16	26	28	52	43	32.7	Rc1/8	29	5.5	9.5	172	28	40	6	14	13	M8	164
ø25	20	17	18	31	31	56.5	47.5	34.5	Rc1/8	29	5.5	10	182	32	44	7	14	15	M10X1.25	173
ø32	20	17	18	37	37	56.5	47.5	37.8	Rc1/4	29	6.6	10	182	38	53	7	14	18	M10X1.25	173
ø40	26	22	24	46	46	62	51	47.3	Rc1/4	29	6.6	12.5	196	46	61	8	14	25	M14X1.5	186
ø50	32	27	30	56.4	56.4	66.5	54.5	52.6	Rc3/8	29	9	16.5	207	58	76	9	14	30	M18X1.5	196
ø63	32	27	30	69.4	69.4	66.5	54.5	59.3	Rc3/8	29	11	16.5	207	70	92	9	14	32	M18X1.5	196

Code / Bore size	MM	N	QA	QB	T	WF	X	GR	GH	T0/T5/T2/T3		T8		T2W/T3W		T1/T2J/T2Y/T3Y/T2YD	
										RD	HD	RD	HD	RD	HD	RD	HD
ø20	10	2	18	10	5	15.5	199.5	67	58	10	10	4	4	12	12	9	9
ø25	12	2	20	10	6	17	212	71.5	62.5	11	9	5	3	13	11	10	8
ø32	12	2	20	12	6	17	212	71.5	62.5	11	9	5	3	13	11	10	8
ø40	16	2	26	14	8	20.5	234.5	77	66	13	11	7	5	15	13	12	10
ø50	20	2	30	17	11	25.5	255.5	81.5	69.5	14	12	8	6	16	14	13	11
ø63	20	2	30	17	11	25.5	255.5	81.5	69.5	14	12	8	6	16	14	13	11

*1 : Tube outer diameter øD and cover outer diameter øE are different for ø20 only.
*2 : For the dimensions of the accessories, refer to page 969.

LCM
LCR
LCG
LCW
LCX
STM
STG
STS/STL
STR2
UCA2
ULK*
JSK/M2
JSG
JSC3/JSC4
USSD
UFCD
UFCD
UB
JSB3
LMB
LML
HCM
HCA
LBC
CAC4
UCAC2
CAC-N
UCAC-N
RCS2
RCC2
PCC
SHC
MCP
GLC
MFC
BBS
RRC
GRC
RV3*
NHS
HRL
LN
Hand
Chuk
MecHnd/Chuk
ShkAbs
FJ
FK
SpdContr
Ending

Dimensions

● Head side flange (FB)

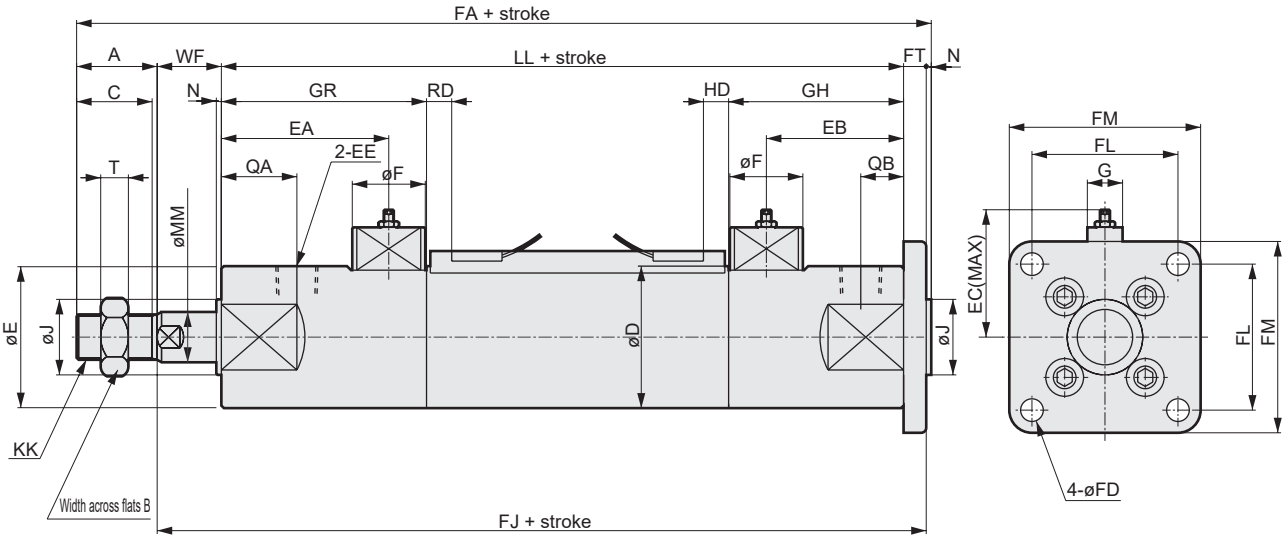

Code / Bore size	A	B	C	D	E	EA	EB	EC	EE	F	FA	FD	FJ	FL	FM	FT	G	J	KK
ø20	18	13	16	26	28	52	43	32.7	Rc1/8	29	205.5	5.5	185.5	28	40	6	14	13	M8
ø25	20	17	18	31	31	56.5	47.5	34.5	Rc1/8	29	219	5.5	197	32	44	7	14	15	M10X1.25
ø32	20	17	18	37	37	56.5	47.5	37.8	Rc1/4	29	219	6.6	197	38	53	7	14	18	M10X1.25
ø40	26	22	24	46	46	62	51	47.3	Rc1/4	29	242.5	6.6	214.5	46	61	8	14	25	M14X1.5
ø50	32	27	30	56.4	56.4	66.5	54.5	52.6	Rc3/8	29	264.5	9	230.5	58	76	9	14	30	M18X1.5
ø63	32	27	30	69.4	69.4	66.5	54.5	59.3	Rc3/8	29	264.5	11	230.5	70	92	9	14	32	M18X1.5

Code / Bore size	LL	MM	N	QA	QB	T	WF	GR	GH	T0/T5/T2/T3		T8		T2W/T3W		T1/T2J/T2Y/T3Y/T2YD	
										RD	HD	RD	HD	RD	HD	RD	HD
ø20	164	10	2	18	10	5	15.5	67	58	10	10	4	4	12	12	9	9
ø25	173	12	2	20	10	6	17	71.5	62.5	11	9	5	3	13	11	10	8
ø32	173	12	2	20	12	6	17	71.5	62.5	11	9	5	3	13	11	10	8
ø40	186	16	2	26	14	8	20.5	77	66	13	11	7	5	15	13	12	10
ø50	196	20	2	30	17	11	25.5	81.5	69.5	14	12	8	6	16	14	13	11
ø63	196	20	2	30	17	11	25.5	81.5	69.5	14	12	8	6	16	14	13	11

*1 : Tube outer diameter øD and cover outer diameter øE are different for ø20 only.
*2 : For the dimensions of the accessories, refer to page 969.

LCM
LCR
LCG
LCW
LCX
STM
STG
STS/STL
STR2
UCA2
ULK*
JSK/M2
JSG
JSC3/JSC4
USSD
UFCD
USC
UB
JSB3
LMB
LML
HCM
HCA
LBC
CAC4
UCAC2
CAC-N
UCAC-N
RCS2
RCC2
PCC
SHC
MCP
GLC
MFC
BBS
RRC
GRC
RV3*
NHS
HRL
LN
Hand
Chuk
MecHnd/Chuk
ShkAbs
FJ
FK
SpdContr
Ending

Accessory dimensions

Rod eye

CAD

● HCM-I-ø20 to ø25

Material: Steel
Zinc chromate treatment

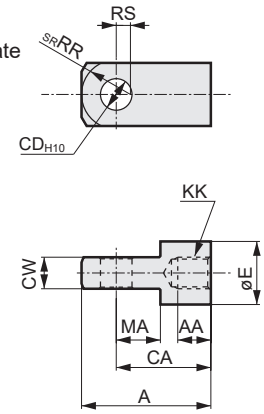

● HCM-I-ø40 to ø63

Material: Cast iron
Painting

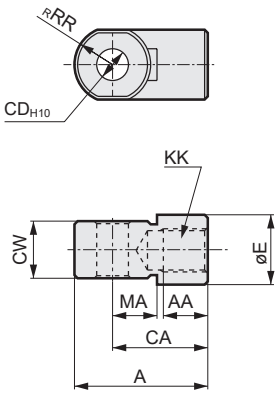

Model No.	Applicable bore size (mm)	A	AA	CA	CD	CW	E	KK	MA	RR	RS	Weight (g)
HCM-I-20	20	34	8.5	25	8	$8^{-0.2}_{-0.4}$	16	M8	11.5	13.4	3.1	39
HCM-I-25	25/32	41	10.5	30	10	$10^{-0.2}_{-0.4}$	20	M10x1.25	14	17.1	4.5	72
HCM-I-40	40	42	14	30	10	$18^{-0.3}_{-0.5}$	22	M14x1.5	14	12	-	152
HCM-I-50	50/63	56	18	40	14	$22^{-0.3}_{-0.5}$	28	M18x1.5	20	16	-	158

Rod clevis

CAD

● HCM-Y-ø20 to ø25

Material: Steel
Zinc chromate treatment

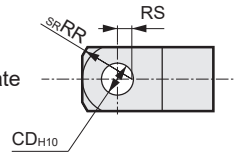

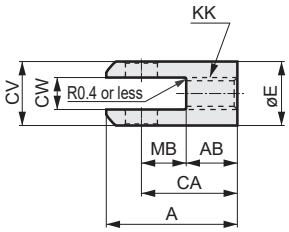

● HCM-Y-ø40 to ø63

Material: Cast iron
Painting

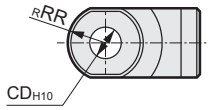

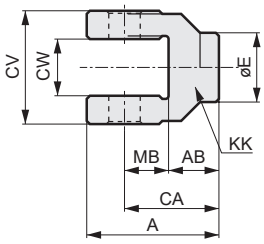

Model No.	Bore size (mm)	A	AB	CA	CD	CV	CW	E	KK	MB	RR	RS	Weight (g)	Applicable pin No.
HCM-Y-20	20	34	13.5	25	8	16	$8^{+0.2}_{+0.4}$	16	M8	11.5	13.4	3.1	46	HCM-P-20
HCM-Y-25	25/32	41	16	30	10	20	$10^{+0.2}_{+0.4}$	20	M10x1.25	14	17.1	4.5	85	HCM-P-25
HCM-Y-40	40	42	16	30	10	36	$18^{+0.3}_{+0.5}$	22	M14x1.5	14	12	-	122	HCM-P-40
HCM-Y-50	50/63	56	20	40	14	44	$22^{+0.3}_{+0.5}$	28	M18x1.5	20	16	-	258	HCM-P-50

Note : A pin and a snap ring are attached with the rod clevis.

Pin for rod eye

Material: Steel
Zinc chromate treatment

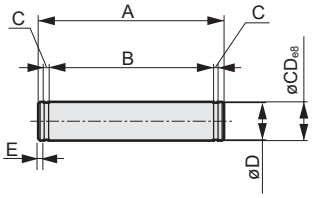

Model No.	Bore size (mm)	A	B	C	CD	D	E	Weight (g)	Applicable snap ring
HCM-P-20	20	21	16.2	0.9	8	7.6	1.5	9	C type for shaft 8
HCM-P-25	25/32	25.6	20.2	1.15	10	9.6	1.6	16	C type for shaft 10
HCM-P-40	40	41.6	36.2	1.15	10	9.6	1.6	26	C type for shaft 10
HCM-P-50	50/63	50.6	44.2	1.15	14	13.4	2.1	60	C type for shaft 14

Note : A pin and a snap ring are attached with the rod clevis.

LCM
LCR
LCG
LCW
LCX
STM
STG
STS/STL
STR2
UCA2
ULK*
JSK/M2
JSG
JSC3/JSC4
USSD
UFCD
UFCD
UB
JSB3
LMB
LML
HCM
HCA
LBC
CAC4
UCAC2
CAC-N
UCAC-N
RCS2
RCC2
PCC
SHC
MCP
GLC
MFC
BBS
RRC
GRC
RV3*
NHS
HRL
LN
Hand
Chuk
MecHnd/Chuk
ShkAbs
FJ
FK
SpdContr
Ending

Cylinder and system selection guide

Some values may vary depending on conditions. Use the following values as guidelines.

STEP 1 Confirming working conditions

(1) Load weight	M(kg)
(2) Stroke	St(mm)
(3) Travel time	T(s)
(4) Cylinder average speed	V0(m/s)
	V0=St/(Tx1000)
(5) Working pressure	P(MPa)
(6) Mounting method/direction	

A	B	C	D
Vertical upward push operation	Vertical downward pull operation	Horizontal pushing operation	Horizontal pull operation

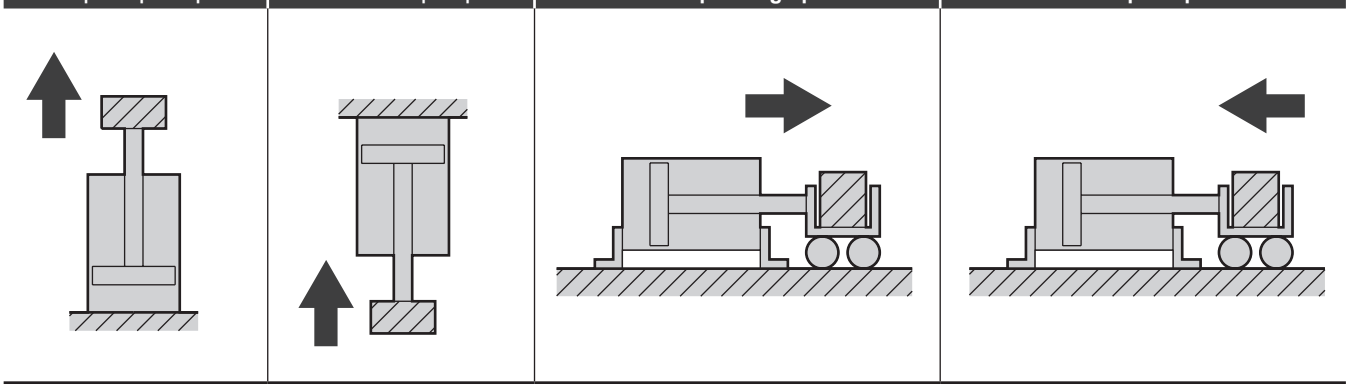

Note : When lifting downward vertically, cylinder thrust is virtually unnecessary. Select the cylinder size with the lifting side requiring thrust.

STEP 2 Overview of cylinder size selection

(1) Set load factor (α) according to the piston speed.

High speed operation (1 to 2 m/s) α = 20%

Medium speed operation (1 m/s or less) α = 50%

(2) Calculate required cylinder thrust (F).

$$F(N) = \frac{980 \times M \times \mu}{\alpha}$$

M : Load weight (kg)

α : Load factor (%)

μ : Coefficient of friction

Mounting method C/D horizontal rolling = 0.1

Mounting method A/B perpendicular and vertical = 1

(3) Find the cylinder bore size (D).

$$D(mm) = \sqrt{\frac{F}{0.25 \times P \times \pi}}$$

P : Working pressure (MPa)

F : Required cylinder thrust (N)

(4) Select a larger size than the value obtained in "(3)".

Size	Cylinder bore size (mm)
ø20	20
ø25	25
ø32	32
ø40	40
ø50	50
ø63	63

LCM
LCR
LCG
LCW
LCX
STM
STG
STS/STL
STR2
UCA2
ULK*
JSK/M2
JSG
JSC3/JSC4
USSD
UFCD
USC
UB
JSB3
LMB
LML
HCM
HCA
LBC
CAC4
UCAC2
CAC-N
UCAC-N
RCS2
RCC2
PCC
SHC
MCP
GLC
MFC
BBS
RRC
GRC
RV3*
NHS
HRL
LN
Hand
Chuk
MecHnd/Chuk
ShkAbs
FJ
FK
SpdContr
Ending

STEP 3 Calculation of max. speed

● Find maximum speed (Vmax) in [Graph 1] according to working conditions (average speed V0/mounting method/direction) of Step 1 and load factor α of Step 2. When maximum speed (Vmax) exceeds 2 m/s, go back to Step 1, and decrease average speed V0.

[Graph 1]

For mounting method/direction A

A: Vertical upward operation

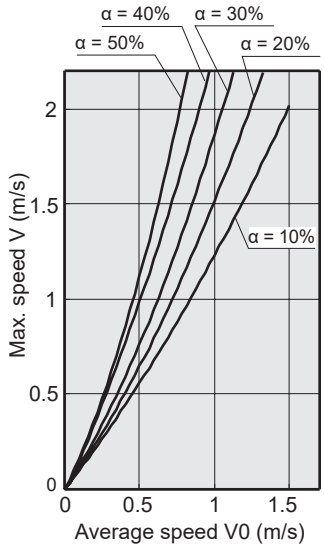

For mounting method/direction B

B: Vertical downward operation

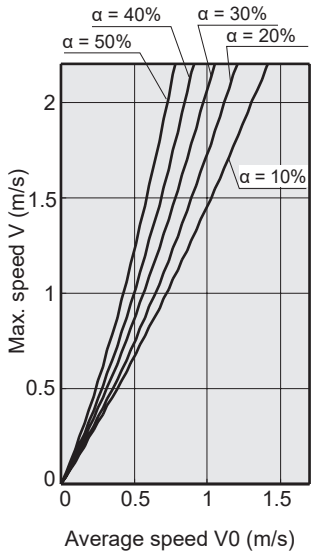

For mounting method/direction C

C: Horizontal pushing operation

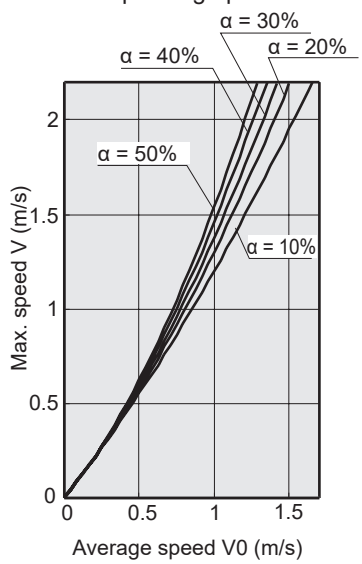

For mounting method/direction D

D: Horizontal pull operation

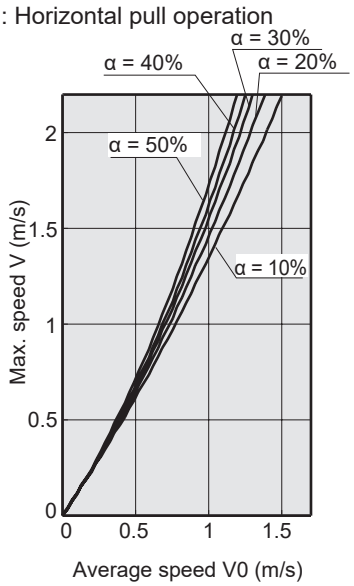

Pipe length is approx. 2 m under working pressure P = 0.5 MPa.
When using under other conditions, use this for reference.

LCM
LCR
LCG
LCW
LCX
STM
STG
STS/STL
STR2
UCA2
ULK*
JSK/M2
JSG
JSC3/JSC4
USSD
UFCD
UFCD
UB
JSB3
LMB
LML
HCM
HCA
LBC
CAC4
UCAC2
CAC-N
UCAC-N
RCS2
RCC2
PCC
SHC
MCP
GLC
MFC
BBS
RRC
GRC
RV3*
NHS
HRL
LN
Hand
Chuk
MecHnd/Chuk
ShkAbs
FJ
FK
SpdContr
Ending

STEP 4 Confirming cushion capacity

● Check if the kinetic energy generated by movement of load is absorbed by the cylinder cushion.

Calculate kinetic energy (E1) according to load weight M of Step 1 and max. speed Vmax found at Step 3.

$$E1(J)=0.5x(Vmax)^2xM$$

· E1 should not be greater than allowable absorbed energy E2 in Table 1.
When E1 > E2, decrease average speed V_0 or install an external buffer device (shock absorber).
[Table 1]

Bore size	Allowable absorbed energy E2 (J)
ø20	3
ø25	5
ø32	9
ø40	14
ø50	23
ø63	30

Note : During perpendicular-upward pull operation and perpendicular-downward push operation, energy can be absorbed, but a smooth stop is not possible. (Bounding, etc., is generated.)
When smooth stop is necessary, as reference, load factor should be 10% or less and max. speed should be 1 m/s or less.

STEP 5 Calculation of required composite effective sectional area

Find required effective sectional area S according to max. speed Vmax found at Step 3 and cylinder bore size found at Step 2.
[Graph 2]

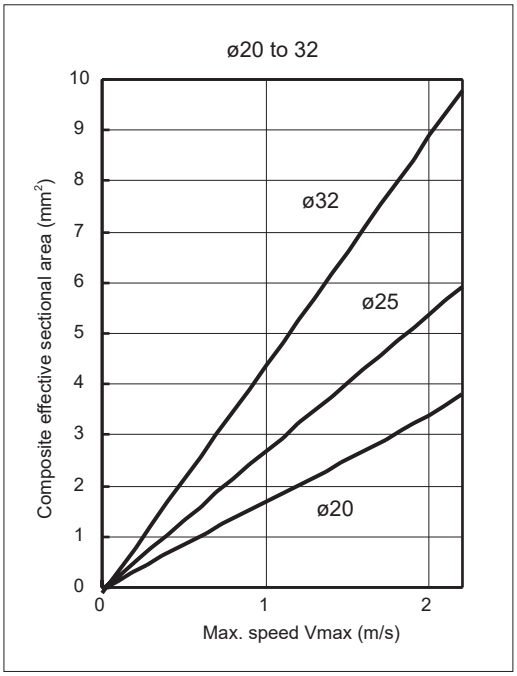

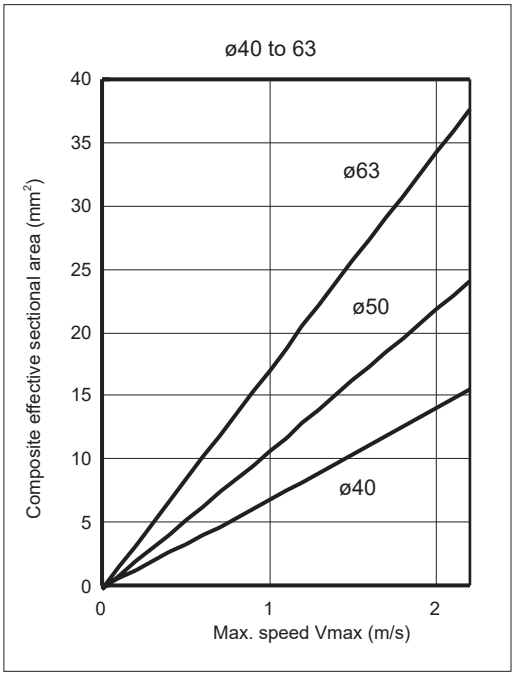

STEP 6 System circuit selection

● Using [Table 2], select the system circuit according to the required composite effective sectional area found in Step 5.

[Table 2]

Code S in the table shows individual effective cross-sectional area (mm^2).

Composite effective sectional area (mm^2)	Solenoid valve								Speed controller		Silencer		Piping
	Direct mounting				Sub-plate								
	Single solenoid	S	Double solenoid	S	Single Solenoid	S	Double solenoid	S		S		S	(Pipe length 2 m)
1.2	4KA110-M5 4GA110R-M5	3	4KA120-M5 4GA120R-M5	3	4KB110-06 4GB110R-06	4	4KB120-06 4GB120R-06	4	SC3W-6-4	2.8	SLW-6A	10	ø4Xø2.5
2	4KA110-M5 4GA110R-M5	3	4KA120-M5 4GA120R-M5	3					SC3W-6-6	3.6	SLW-6A	10	ø6Xø4
2.3					4KB110-06 4GB110R-06	4	4KB120-06 4GB120R-06	4	SC3W-6-6	3.6	SLW-6A	10	ø6Xø4
3.1	4KA210-06 4GA210R-06	13	4KA220-06 4GA220R-06	12.5					SC3W-6-8	3.6	SLW-6A	10	ø8Xø5.7
3.2					4KB210-06 4GB210R-06	14	4KB220-06 4GB220R-06	14	SC3W-6-8	3.6	SLW-6A	10	ø8Xø5.7
3.6	4KA210-06 4GA210R-06	13	4KA220-06 4GA220R-06	12.5					SC1-6	8	SLW-6A	10	ø6Xø4
3.7					4KB210-06 4GB210R-06	14	4KB220-06 4GB220R-06	14	SC1-6	8	SLW-6A	10	ø6Xø4
5	4KA210-06 4GA210R-06	13	4KA220-06 4GA220R-06	12.5	4KB210-06 4GB210R-06	14	4KB220-06 4GB220R-06	14	SC1-6	8	SLW-6A	10	ø8Xø5.7
5.3					4KB210-08 4GB210R-08	14	4KB220-08 4GB220R-08	14	SC3W-8-8	7	SLW-8A	20	ø8Xø5.7
5.9					4KB210-08 4GB210R-08	14	4KB220-08 4GB220R-08	14	SC3W-8-10	7	SLW-8A	20	ø10Xø7.2
6.1	4F210-08	18	4F220-08	18					SC3W-8-10	7	SLW-8A	20	ø10Xø7.2
6.4	4KA310-08 4GA310R-08	25	4KA320-08 4GA320R-08	25	4KB310-08 4GB310R-08	28	4KB320-08 4GB320R-08	28	SC3W-8-10	7	SLW-8A	20	ø10Xø7.2
6.5	4KA210-06 4GA210R-06	13	4KA220-06 4GA220R-06	12.5					SC1-8	13	SLW-6A	10	ø10Xø7.2
6.9					4KB210-08 4GB210R-08	14	4KB220-08 4GB220R-08	14	SC1-8	13	SLW-8A	20	ø8Xø5.7
8.5					4F210-08	18	4F220-08	18	SC1-8	13	SLW-8A	20	ø10Xø7.2
9	4KA310-08 4GA310R-08	25	4KA320-08 4GA320R-08	25	4KB310-08 4GB310R-08	28	4KB320-08 4GB320R-08	28	SC1-8	13	SLW-8A	20	ø10Xø7.2
9.9	4F310-10	32	4F320-10	32					SC3W-10-10	15	SLW-8A	20	ø10Xø7.2
10	4KA410-10 4GA410-10	50	4KA420-10 4GA420-10	50	4KB410-10 4GB410-10	60	4KB420-10 4GB420-10	60	SC3W-10-10	15	SLW-8A	20	ø10Xø7.2
11	4KA410-10 4GA410-10	50	4KA420-10 4GA420-10	50	4KB410-10 4GB410-10	60	4KB420-10 4GB420-10	60	SC3W-10-12	15	SLW-8A	20	ø12Xø8.9
13					4F410-10	32	4F420-10	32	SC1-10	25	SLW-8A	20	ø12Xø8.9
15.8					4F510-10	47	4F520-10	47	SC1-10	25	SLW-10A	30	ø12Xø8.9
17					4F510-10	47	4F520-10	47	SC1-10	25	SLW-10A	30	ø15Xø11.5
19.6					4F510-10	47	4F520-10	47	SC1-15	36	SLW-10A	30	ø15Xø11.5
20					4F610-15	90	4F620-15	90	SC1-15	36	SLW-15A	40	ø12Xø8.9
24					4F610-15	90	4F620-15	90	SC1-15	36	SLW-15A	40	ø15Xø11.5
30					4F610-15	90	4F620-15	90	SC-20A	110	SLW-15A	40	ø15Xø11.5
41					4F610-15	90	4F620-15	90	SC-20A	110	SL-15A	92	ø15Xø11.5
45					4F610-15	90	4F620-15	90	SC-20A	110	SL-20A	160	ø15Xø11.5

[Circuit diagram]

1. Speed controller
2. Piping
3. Solenoid valve
4. Silencer

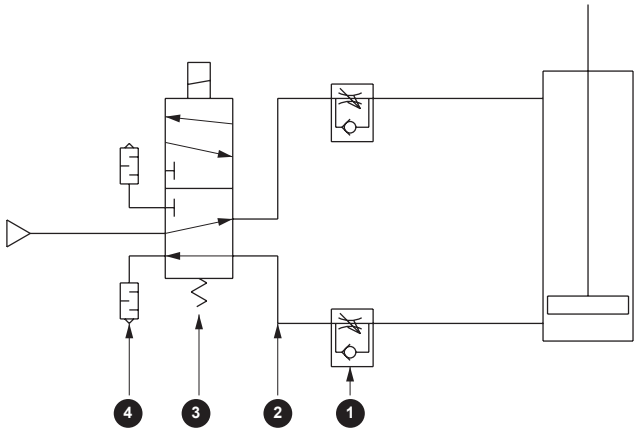

Safety Precautions

Be sure to read this section before use.

Refer to Intro Page 73 for general information of the cylinder, and to Intro Page 80 for general information of the cylinder switch.

Product-specific cautions: High energy absorption cylinder HCM Series

Design/selection

CAUTION

■ Although the cylinder port is designed to achieve speeds of 2000 mm/s or more, be sure to mount a speed controller in order to use it within the specified range.

■ Note that the working piston speed of 2000 mm/s is the max. speed, not the average speed.

■ Avoid using the product so as to apply lateral load to the piston rod of the cylinder. The required speed may not be attained, bearings may wear abnormally, and performance may drop.

■ Cushion
The air cushion absorbs kinetic energy that the piston generates by using air compressibility and prevents the piston and cover from colliding at the stroke end. Therefore, note that it is not a function for reducing the piston speed near the stroke end.

■ Consider the system selection guide of the cylinder only as a guideline, as it may vary depending on the operating conditions (working pressure, travel method and direction of the load and piping length).

■ Operating the cylinder at high speed increases the instantaneous flow rate of the air, allowing drainage to accumulate more easily. Provide an air tank to prevent drain from entering the cylinder and to prevent pressure loss when filtering oil mist.

Mounting, installation and adjustment

CAUTION

■ When adjusting speed with the speed controller, gradually open the needle from the closed state and increase speed. The piston rod may suddenly pop out and create a hazard if speed is adjusted while the needle is open.

■ If operation is started while the exhaust side is at atmospheric pressure, the rod could pop out and cause a dangerous situation. Pressurize the exhaust side before starting.

■ Switch rails are adhered with industrial adhesive tape. If used in an atmosphere containing inorganic or organic solvents or water vapor, rails may become loose.
Main inorganic solvents/organic solvents
Inorganic solvents : Sodium hydroxide, hydrochloric acid, etc.
Organic solvents : Toluene, ethanol, hexane, gasoline, kerosene, etc.

■ Remove all oil, moisture, dust, etc., from the body (tube) in order to adhere the switch rail.
(Perform adhesion by referring to instructions attached to the part.)

■ Mount the speed controller near the cylinder piping port. Otherwise, speed cannot be controlled.

■ When the unit will be used where the specifications of the cushion (allowable absorbed energy) will be exceeded, provide a separate external shock absorber.

Use/maintenance

CAUTION

■ When disassembling the cylinder, grip the width across flats portion of either of the head cover or the rod cover with a vice, etc., apply a wrench or an adjustable wrench to the width across flats portion of the other cover and loosen it to remove the cover.

When retightening the cover with “LB” foot bracket, tighten so brackets on both sides have no play. When using other than an “LB” foot bracket, retighten from the position set before disassembly.

HCA

High speed cylinder

High speed

ø20/ø25/ø32/ø40
ø50/ø63/ø80/ø100

Overview

This is a high speed (3000 mm/s) and high energy absorbing cylinder. This can be used for mold ejection of resins, etc.

CONTENTS

Series variation	954
Variation and option combination selection table	976
● Double acting/single rod (HCA)	978
HCA accessory dimensions	987
Selection guide	988
⚠ Safety precautions	991

Product introduction

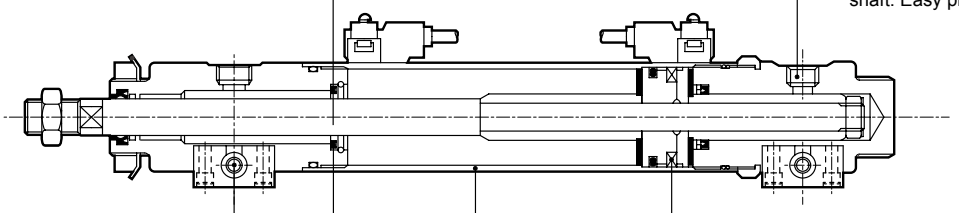

- ● New material capable of withstanding high speed sliding used. Superb durability.
- ● Port direction is vertical with the rod shaft. Easy piping in vertical direction.
- ● Easy cushion adjustment at relief pressure setting only.
- ● 6 to 8 times higher absorbed energy than conventional.
  Compressibility of air functions effectively, and realizes better shock absorbing than a shock absorber.
- ● Aluminum material is used to reduce weight.
- ● Switch can be mounted easily with built-in magnet.

LCM
LCR
LCG
LCW
LCX
STM
STG
STS/STL
STR2
UCA2
ULK*
JSK/M2
JSG
JSC3/JSC4
USSD
UFCD
UFCD
UB
JSB3
LMB
LML
HCM
HCA
LBC
CAC4
UCAC2
CAC-N
UCAC-N
RCS2
RCC2
PCC
SHC
MCP
GLC
MFC
BBS
RRC
GRC
RV3*
NHS
HRL
LN
Hand
Chuk
MecHnd/Chuk
ShkAbs
FJ
FK
SpdContr
Ending

Variation and option combination selection table

◎ : Option
○ : Available (made-to-order product)
△ : Available depending on conditions (Contact CKD.)
× : Not available

Category		Category	Variation			Port thread			Option	
			Double acting basic	With cylinder switch		NPT	G		Specify piston rod end form	
		Code	None	None		N	G		N*	
Variation	Double acting basic	Blank		◎		○	○		○	
	With cylinder switch	Blank				○	○		○	
Port thread	NPT	N					×		○	
	G	G							○	
Option	Specify piston rod end form	N*								
Accessory	Cylinder switch	Listed separately	◎	◎		○	○		○	
	Rod eye	I	◎	◎		○	○		△	
	Rod clevis	Y	◎	◎		○	○		△	

[Example of model No.]

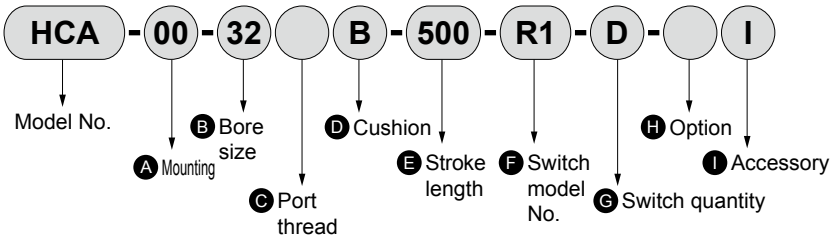

Model No.: High speed cylinder

● Variation	: Double acting, basic with switch
Ⓐ Mounting	: Basic
Ⓑ Bore size	: ø32 mm
Ⓒ Port thread	: Rc thread
Ⓓ Cushion	: Both sides cushioned
Ⓔ Stroke length	: 500 mm
Ⓕ Switch model No.	: Proximity R1 switch, lead wire 1 m
Ⓖ Switch quantity	: 2
Ⓗ Option	: None
Ⓘ Accessory	: Rod eye

MEMO

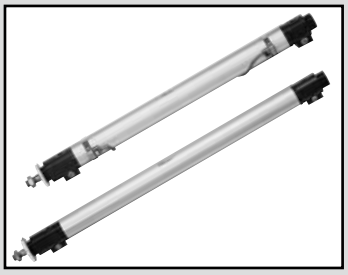

High speed cylinder/double acting/single rod

HCA Series

● Bore size: ø20/ø25/ø32/ø40/ø50/ø63/ø80/ø100

JIS symbol 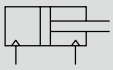

Specifications

Item		HCA (Standard/with switch)							
Bore size	mm	ø20	ø25	ø32	ø40	ø50	ø63	ø80	ø100
Actuation		Double acting							
Working fluid		Compressed air							
Max. working pressure	MPa	1.0 (≈150 psi, 10 bar)							
Min. working pressure	MPa	0.1 (≈15 psi, 1 bar)							
Proof pressure	MPa	1.6 (≈230 psi, 16 bar)							
Ambient temperature	°C	-10 (14°F) to 60 (140°F) (no freezing)							
Port size		Rc1/8		Rc1/4		Rc3/8		Rc1/2	
Stroke tolerance	mm	$^{+2.4}_{0}$	$^{+3.6}_{0}$	$^{+4.3}_{0}$				$^{+5.0}_{0}$	
Working piston speed	mm/s	50 to 3000							
Cushion		Air cushion							
Lubrication		Not required (use turbine oil class 1 ISO VG32 if necessary for lubrication)							
Allowable absorbed energy J	Cushioned	7.54	11.8	18.6	29.4	46.1	73.5	118	184
	Without cushion	Cannot absorb high energy generated by external load. We recommend using an external shock absorber.							
Effective air cushion length	mm	85	75	70	70	70	70	70	70

*1 : Refer to page 990 for absorbed energy.

Stroke length

Bore size (mm)	Stroke length (mm)	Max. stroke length (mm)	Min. stroke length (mm)
ø20/ø25/ø32	400 to 700	700	1
ø40/ø50/ø63/ø80/ø100	400 to 1000	1000	

*1 : The custom stroke length is available in 1 mm increments.
*2 : Stroke length exceeding the max. stroke length is available depending on the working conditions. Contact CKD.
*3 : For types with switch, minimum stroke length varies depending on the mounting method. Refer to the table below for details.
*4 : The stroke is available from 1 mm. However, this product's cushion area is longer than a typical cylinder, allowing high absorbed energy. Therefore, at the stroke length below or less, the cushion is usually applied, and the effects of high-speed use cannot be obtained.

Model No.	Stroke at which high-speed effects cannot be obtained	Recommended stroke length
HCA	200 mm stroke length or less	400 mm stroke length or more

Min. stroke length with switch

	Different surface mounting		Same surface mounting	
Sketch	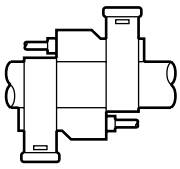	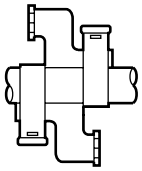	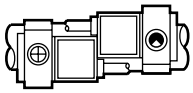	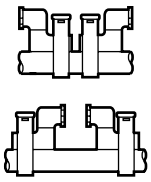 (A) (B)
Item	Grommet	Terminal box	Grommet	Terminal box
ø20 to ø100	15(10) mm	15(10) mm	30 mm	32 mm (Mounting A) 80 mm (Mounting B)

● *1 : The value in ( ) is for types with one switch.

LCM
LCR
LCG
LCW
LCX
STM
STG
STS/STL
STR2
UCA2
ULK*
JSK/M2
JSG
JSC3/JSC4
USSD
UFCD
USC
UB
JSB3
LMB
LML
HCM
HCA
LBC
CAC4
UCAC2
CAC-N
UCAC-N
RCS2
RCC2
PCC
SHC
MCP
GLC
MFC
BBS
RRC
GRC
RV3*
NHS
HRL
LN
Hand
Chuk
MecHnd/Chuk
ShkAbs
FJ
FK
SpdContr
Ending

Switch specifications

Item		Proximity switch				
		R1	R2	R2Y (2-color display)	R3	R3Y (2-color display)
Applications		Programmable controller, relay, compact solenoid valve	Dedicated for programmable controller		For programmable controller, relay, IC circuit, solenoid valve	
Output method		————			NPN output	
Power supply voltage		————	————		4.5 VDC to 28 VDC	
Load voltage		85 VAC to 265 VAC	10 to 30 VDC		30 VDC or less	
Load current		5 to 100 mA	5 to 30 mA		200 mA or less	100 mA or less
Indicator lamp		LED (Lit when ON)		Red/green LED (Lit when ON)	LED (Lit when ON)	Red/green LED (Lit when ON)
Leakage current		1 mA or less with 100 VAC, 2 mA or less with 200 VAC	1 mA or less	1.2 mA or less	10 μA or less	
Weight g	Grommet lead	1 m:42 3 m:100 5 m:158			1 m:56 3 m:114 5 m:172	
	With terminal box	68		82	68	82

Item		Reed switch								
		R0			R4		R5			R6
Applications		For relay, programmable controller			For high capacity relay, solenoid valve		For programmable controller, relay, IC circuit (without indicator lamp), serial connection			Dedicated for programmable controller (with DC self-hold)
Load voltage		12/24 VDC	110 VAC	220 VAC	110 VAC	220 VAC	12/24 VDC	110 VAC	220 VAC	24 VDC
Load current		5 to 50 mA	7 to 20 mA	7 to 10 mA	20 to 200 mA	10 to 200 mA	50 mA or less	20 mA or less	10 mA or less	5 to 50 mA
Indicator lamp		LED lit when ON			Lit when the indicator lamp is OFF		None			LED lit when ON
Leakage current		0 mA			1 mA or less		0 mA			0.1 mA or less
Weight g	Grommet lead	1 m:42 3 m:100 5 m:158								
	With terminal box	68								

*1: Refer to Ending Page 1 for detailed switch specifications and dimensions.

Cylinder weight

(Unit: kg)

Bore size (mm)	Product weight when stroke length S = 0 mm			Weight per switch	Mounting bracket weight per switch	Additional weight per S = 100 mm
	Basic (00)	Foot (LB)	Flange (FA/FB)			
ø20	0.73	0.91	0.80	Refer to the weight in the switch specifications.	0.02	0.11
ø25	0.80	0.98	0.87		0.02	0.14
ø32	0.85	1.03	0.92		0.02	0.16
ø40	1.37	1.63	1.69		0.02	0.27
ø50	2.13	2.56	2.50		0.02	0.34
ø63	3.17	3.88	3.81		0.03	0.42
ø80	5.75	7.27	7.12		0.03	0.67
ø100	7.92	9.94	9.75		0.03	0.91

(Example) Product weight of HCA-00-40B-500-R0-D

- Product weight for 0 mm stroke length.....1.37 kg
- Additional weight for 500 mm stroke length.....0.27 x $\frac{500}{100}$ = 1.35 kg
- Weight of 2 switches..... 2 x 0.042 kg + 2 x 0.02 kg = 0.124 kg
- Product weight.....1.37 + 1.35 + 0.124 = 2.844 kg

Theoretical thrust table

(Unit: N)

Bore size (mm)	Operating direction	Working pressure MPa										
		0.1	0.15	0.2	0.3	0.4	0.5	0.6	0.7	0.8	0.9	1.0
ø20	Push	31.4	47.1	62.8	94.2	1.26×10^2	1.57×10^2	1.88×10^2	2.20×10^2	2.51×10^2	2.83×10^2	3.14×10^2
	Pull	23.6	35.3	47.1	70.7	94.2	1.18×10^2	1.41×10^2	1.65×10^2	1.88×10^2	2.12×10^2	2.36×10^2
ø25	Push	49.1	73.6	98.2	1.47×10^2	1.96×10^2	2.45×10^2	2.95×10^2	3.44×10^2	3.93×10^2	4.42×10^2	4.91×10^2
	Pull	37.8	56.7	75.6	1.13×10^2	1.51×10^2	1.89×10^2	2.27×10^2	2.64×10^2	3.02×10^2	3.40×10^2	3.78×10^2
ø32	Push	80.4	1.21×10^2	1.61×10^2	2.41×10^2	3.22×10^2	4.02×10^2	4.83×10^2	5.63×10^2	6.43×10^2	7.24×10^2	8.04×10^2
	Pull	69.1	1.04×10^2	1.38×10^2	2.07×10^2	2.76×10^2	3.46×10^2	4.15×10^2	4.84×10^2	5.53×10^2	6.22×10^2	6.91×10^2
ø40	Push	1.26×10^2	1.88×10^2	2.51×10^2	3.77×10^2	5.03×10^2	6.28×10^2	7.54×10^2	8.80×10^2	1.01×10^3	1.13×10^3	1.26×10^3
	Pull	1.06×10^2	1.58×10^2	2.11×10^2	3.17×10^2	4.22×10^2	5.28×10^2	6.33×10^2	7.39×10^2	8.44×10^2	9.50×10^2	1.06×10^3
ø50	Push	1.96×10^2	2.95×10^2	3.93×10^2	5.89×10^2	7.85×10^2	9.82×10^2	1.18×10^3	1.37×10^3	1.57×10^3	1.77×10^3	1.96×10^3
	Pull	1.65×10^2	2.47×10^2	3.30×10^2	4.95×10^2	6.60×10^2	8.25×10^2	9.90×10^2	1.15×10^3	1.32×10^3	1.48×10^3	1.65×10^3
ø63	Push	3.12×10^2	4.68×10^2	6.23×10^2	9.35×10^2	1.25×10^3	1.56×10^3	1.87×10^3	2.18×10^3	2.49×10^3	2.81×10^3	3.12×10^3
	Pull	2.80×10^2	4.20×10^2	5.61×10^2	8.41×10^2	1.12×10^3	1.40×10^3	1.68×10^3	1.96×10^3	2.24×10^3	2.52×10^3	2.80×10^3
ø80	Push	5.03×10^2	7.54×10^2	1.01×10^3	1.51×10^3	2.01×10^3	2.51×10^3	3.02×10^3	3.52×10^3	4.02×10^3	4.52×10^3	5.03×10^3
	Pull	4.54×10^2	6.80×10^2	9.07×10^2	1.36×10^3	1.81×10^3	2.27×10^3	2.72×10^3	3.17×10^3	3.63×10^3	4.08×10^3	4.54×10^3
ø100	Push	7.85×10^2	1.18×10^3	1.57×10^3	2.36×10^3	3.14×10^3	3.93×10^3	4.71×10^3	5.50×10^3	6.28×10^3	7.07×10^3	7.85×10^3
	Pull	7.15×10^2	1.07×10^3	1.43×10^3	2.14×10^3	2.86×10^3	3.57×10^3	4.29×10^3	5.00×10^3	5.72×10^3	6.43×10^3	7.15×10^3

LCM
LCR
LCG
LCW
LCX
STM
STG
STS/STL
STR2
UCA2
ULK*
JSK/M2
JSG
JSC3/JSC4
USSD
UFCD
UFCD
UB
JSB3
LMB
LML
HCM
HCA
LBC
CAC4
UCAC2
CAC-N
UCAC-N
RCS2
RCC2
PCC
SHC
MCP
GLC
MFC
BBS
RRC
GRC
RV3*
NHS
HRL
LN
Hand
Chuk
MecHnd/Chuk
ShkAbs
FJ
FK
SpdContr
Ending

How to order

Without switch (built-in magnet for switch)

HCA - 00 - 20 ( ) B - 400 ———— I

With switch (built-in magnet for switch)

HCA - 00 - 20 ( ) B - 400 - R0 - R - I

Ⓐ Mounting *1

Ⓑ Bore size

Ⓒ Port thread

Ⓓ Cushion

Ⓔ Stroke length

Ⓕ Switch model No.

Ⓖ Switch quantity

Ⓗ Accessory

Code	Description
Ⓐ Mounting	
00	Basic
LB	Axial foot
FA	Rod side flange
FB	Head side flange

Ⓑ Bore size (mm)	
20	ø20
25	ø25
32	ø32
40	ø40
50	ø50
63	ø63
80	ø80
100	ø100

Ⓒ Port thread	
Blank	Rc thread
N	NPT thread (made-to-order product)
G	G thread (made-to-order product)

Ⓓ Cushion	
B	Both sides cushioned
R	Rod side cushioned
H	Head side cushioned
N	Without cushion

Ⓔ Stroke length (mm)

Bore size	Stroke length	Custom stroke length
ø20 to ø32	**1 to 700**	**In 1 mm increments**
ø40 to ø100	**1 to 1000**	

Ⓕ Switch model No.

Grommet	Terminal box	Contact	Voltage AC	Voltage DC	Display	Lead wire
R1*	**R1B**	**Proximity**	●		1-color display	2-wire
R2*	**R2B**			●		
R2Y*	**R2YB**			●	2-color display	2-wire
R3Y*	**R3YB**			●		3-wire
R3*	**R3B**			●	1-color display	
R0*	**R0B**	**Reed**	●	●	1-color display	2-wire
R4*	**R4B**		●		1-color display	
R5*	**R5B**		●	●	Without indicator lamp	
R6*	**R6B**			●	1-color display	

*** Lead wire length**	
Blank	1 m (standard)
3	3 m (option)
5	5 m (option)

Ⓖ Switch quantity	
R	1 on rod side
H	1 on head side
D	2
T	3

Ⓗ Accessory	
I	Rod eye
Y	Rod clevis (pin and snap ring attached)

⚠ Precautions for model No. selection

*1: Mounting bracket, nut, and toothed washer are attached with product at shipment.

[Example of model No.]

HCA-00-20B-400-R0-R-I

Model: High speed cylinder Double acting/single rod

Ⓐ Mounting : Basic
Ⓑ Bore size : ø20 mm
Ⓒ Port thread : Rc thread
Ⓓ Cushion : Both sides cushioned
Ⓔ Stroke length : 400 mm
Ⓕ Switch model No.: Reed R0 switch, lead wire 1 m
Ⓖ Switch quantity : 1 on rod side
Ⓗ Accessory : Rod eye

How to order switch

● Switch body + mounting bracket set

HCA - R0 - 20

Bore size
(Item Ⓑ on page 980)

Switch model No.
(Item Ⓕ on page 980)

● Switch body only

SW - R0

Switch model No.
(Item Ⓕ on page 980)

● Mounting bracket set

HCA - R - 20

Bore size
(Item Ⓑ on page 980)

Mounting bracket

● Terminal box only

·For R□B

SW - RB

How to order mounting bracket

Bore size (mm) / Mounting bracket	20	25	32	40	50	63	80	100
Foot (LB)	HCA-LB-20	HCA-LB-25	HCA-LB-32	HCA-LB-40	HCA-LB-50	HCA-LB-63	HCA-LB-80	HCA-LB-100
Flange (FA/FB)	HCA-FA-20	HCA-FA-25	HCA-FA-32	HCA-FA-40	HCA-FA-50	HCA-FA-63	HCA-FA-80	HCA-FA-100

*1 : The foot mounting bracket is provided as 2 pcs./set.

LCM
LCR
LCG
LCW
LCX
STM
STG
STS/STL
STR2
UCA2
ULK*
JSK/M2
JSG
JSC3/JSC4
USSD
UFCD
UFCD
UB
JSB3
LMB
LML
HCM
HCA
LBC
CAC4
UCAC2
CAC-N
UCAC-N
RCS2
RCC2
PCC
SHC
MCP
GLC
MFC
BBS
RRC
GRC
RV3*
NHS
HRL
LN
Hand
Chuk
MecHnd/Chuk
ShkAbs
FJ
FK
SpdContr
Ending

Internal structure and parts list

● HCA

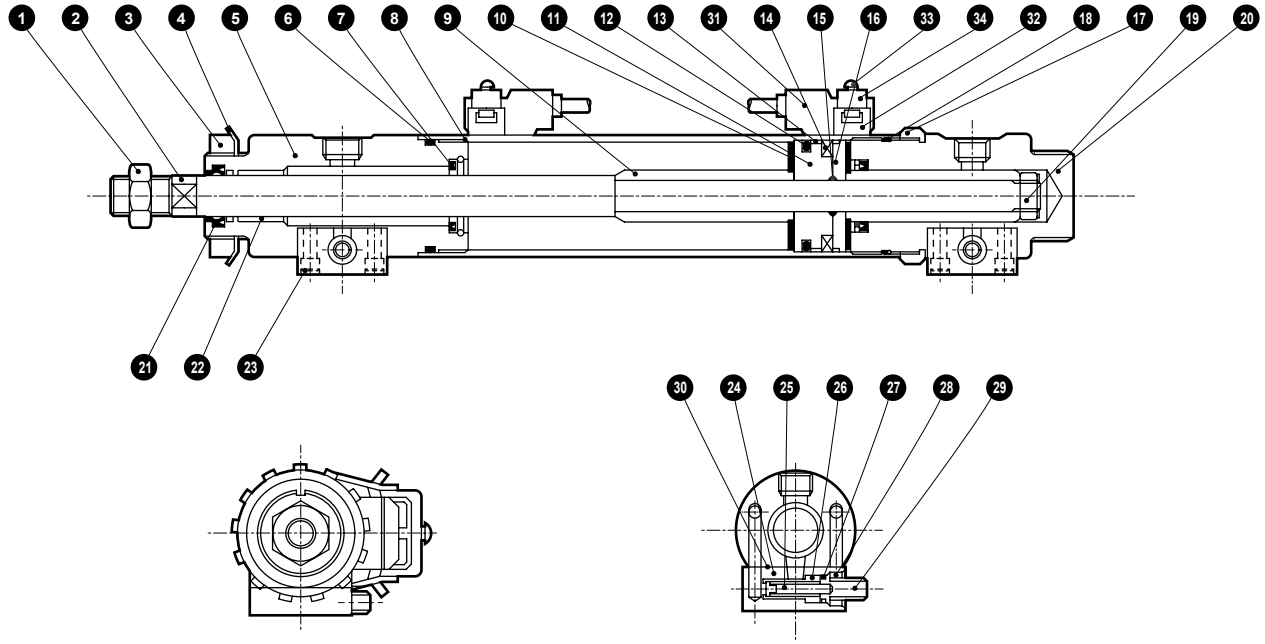

Note : The shape differs slightly for the ø20 type only.

No.	Part name	Material	Remarks	No.	Part name	Material	Remarks
1	Rod nut	Steel	Zinc chromate	19	Piston nut	Steel	Zinc chromate
2	Piston rod	Steel	Industrial chrome plating	20	Head cover	Aluminum alloy	Alumite
3	Nut	Steel	Zinc plated	21	Rod packing	Nitrile rubber	
4	Toothed washer	Steel	Zinc plated	22	Bush	Oil impregnated bearing alloy	
5	Rod cover	Aluminum alloy	Alumite	23	Hexagon socket head cap screw	Alloy steel	Black finish
6	Cylinder gasket	Nitrile rubber		24	Adjuster case	Aluminum alloy	Alumite
7	Cushion packing	Urethane, steel		25	Check valve	Copper alloy	
8	Cylinder tube	Aluminum alloy	Hard alumite	26	Spring	Stainless steel	
9	Cushion ring	Steel	Industrial chrome plating	27	Adjusting gasket	Nitrile rubber	
10	Cushion rubber	Urethane rubber		28	U nut	Steel	Zinc chromate
11	Piston	Aluminum alloy	Chromate	29	Adjusting bolt	Steel	Nickeling
12	Piston packing	Nitrile rubber		30	Case gasket	Special fiber cloth	Special fabric + nitrile rubber
13	Wear ring	Acetal resin		With switch			
14	Magnet	Plastic		31	Switch body		
15	Piston gasket	Nitrile rubber		32	Band	Stainless steel	
16	Piston holder	Aluminum alloy	Chromate	33	Pan head machine screw	Steel	
17	Lock nut	Steel	Black chrome plating	34	Mounting bracket	Stainless steel	
18	Back up ring	Steel	Zinc chromate				

Repair parts list

Bore size (mm)	Kit No.	Repair parts No.
ø 20	HCA-20K	
ø 25	HCA-25K	
ø 32	HCA-32K	
ø 40	HCA-40K	6 7 10 12 13
ø 50	HCA-50K	21 30
ø 63	HCA-63K	
ø 80	HCA-80K	
ø100	HCA-100K	

Note : Specify the kit No. when placing an order.

Material of mounting bracket

Mounting	Material	Remarks
LB	Steel	Zinc plated
FA/FB	Steel	Zinc plated

Dimensions

● Basic (00) R type with switch

ø20, ø25

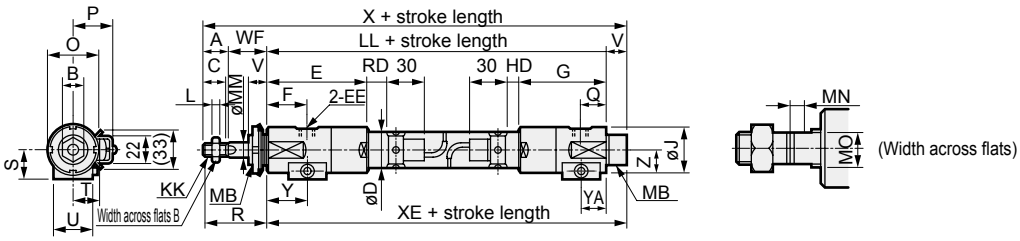

ø32 to ø63

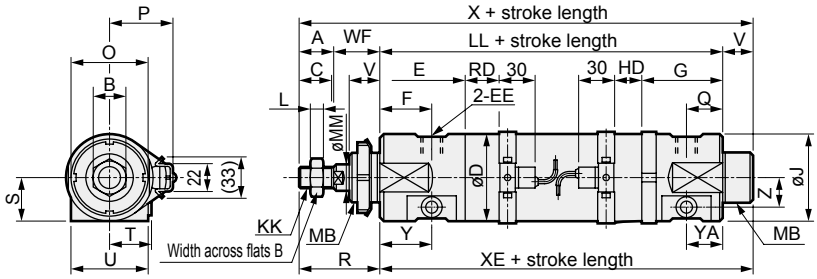

ø80, ø100

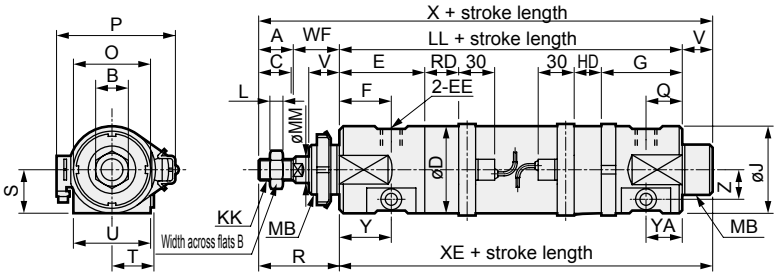

● R type with switch terminal box

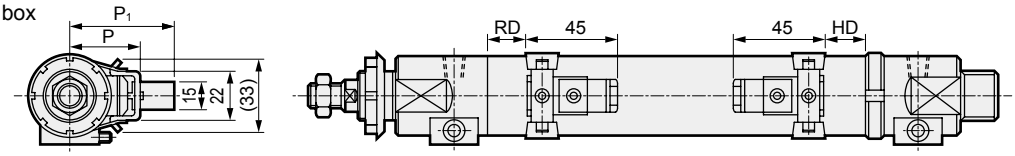

*1 : For the dimensions of the accessories, refer to page 987.

Code	Basic (00) basic dimensions																	
Bore size (mm)	A	B	C	D	E	EE	F	G	J	KK	L	LL	MB	MM	MN	MO	O	Q
ø 20	20	13	18	25	86	Rc1/8	34	74	33	M8×1	5	223	M25×1.5	10	4	8	42	22
ø 25	20	17	18	30	82	Rc1/8	32.5	71	37	M10×1.25	6	213	M25×1.5	12	5	10	42	21.5
ø 32	22	17	20	37	67	Rc1/4	42	57	37	M10×1.25	6	197	M25×1.5	12	5	10	42	25
ø 40	22	22	20	46	73	Rc1/4	45.5	57	46	M14×1.5	8	203	M35×1.5	16	6	14	57	25
ø 50	28	27	26	56.4	77	Rc3/8	47.5	60	56	M18×1.5	11	211	M40×1.5	20	7	17	62	24.5
ø 63	28	27	26	69.4	69	Rc3/8	42	65	69.4	M18×1.5	11	214	M40×1.5	20	7	17	62	29
ø 80	36	32	34	88	73	Rc1/2	45	70	88	M22×1.5	13	232	M60×2	25	10	22	86	31.5
ø100	45	41	43	108	72	Rc1/2	42	72	108	M26×1.5	16	235	M60×2	30	11	27	86	30

Code												With switch			
Bore size (mm)	R	S	T	U	V	WF	X	XE	Y	YA	Z	HD	P	P_1	RD
ø 20	44	21.5	17 to 20	29	16	24	283	239	34	22	15	15.5	28	48	17.5
ø 25	52	23.5	18.5 to 22	32	16	32	281	229	32.5	21.5	17	13	34	54	14.5
ø 32	52	23.5	18.5 to 22	32	20	30	269	217	42	25	17	22	35	55	21
ø 40	54	28.5	22 to 27	38	20	32	277	223	45.5	25	21	22	39	59	21
ø 50	61	35.5	27 to 34.5	48	20	33	292	231	47.5	24.5	25.5	19	44	64	25
ø 63	66	35.7	34 to 43	62	25	38	305	239	42	29	25.7	21	52	72	28
ø 80	78	46.5	41 to 51	76	25	42	335	257	45	31.5	34.5	24.5	114	134	33.5
ø100	93	55.5	48 to 60	90	30	48	358	265	42	30	43.5	25	134	154	35

LCM
LCR
LCG
LCW
LCX
STM
STG
STS/STL
STR2
UCA2
ULK*
JSK/M2
JSG
JSC3/JSC4
USSD
UFCD
UFCD
UB
JSB3
LMB
LML
HCM
HCA
LBC
CAC4
UCAC2
CAC-N
UCAC-N
RCS2
RCC2
PCC
SHC
MCP
GLC
MFC
BBS
RRC
GRC
RV3*
NHS
HRL
LN
Hand
Chuk
MecHnd/Chuk
ShkAbs
FJ
FK
SpdContr
Ending

Dimensions

● Axial foot (LB)

ø20, ø25

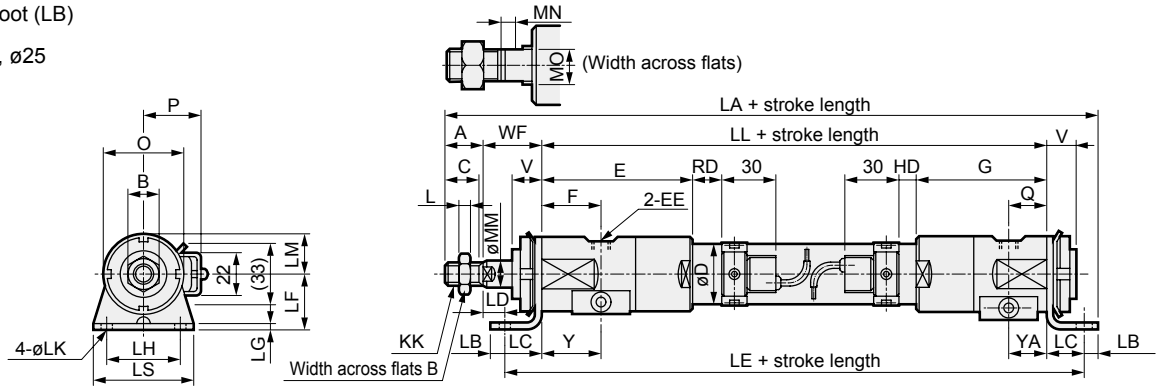

ø32 to ø50

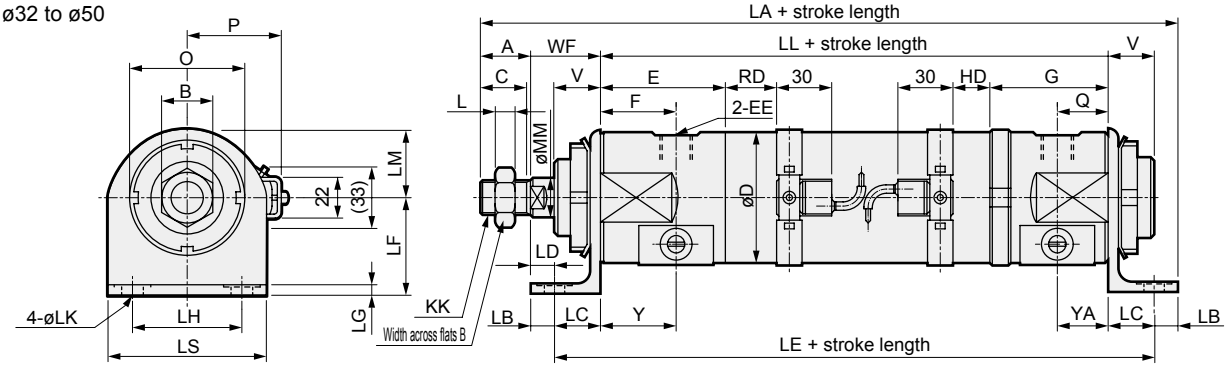

ø63 to ø100

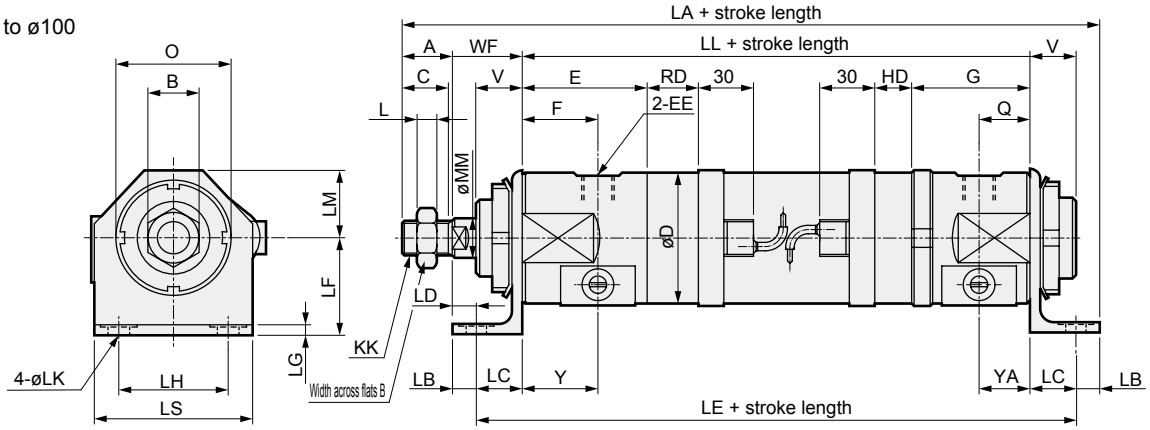

*1 : For the dimensions of the accessories, refer to page 987.

Code	Axial foot (LB) basic dimensions																	
Bore size (mm)	A	B	C	D	E	EE	F	G	KK	L	LL	MM	MN	MO	O	Q	V	WF
ø 20	20	13	18	25	86	Rc1/8	34	74	M8×1	5	223	10	4	8	42	22	16	24
ø 25	20	17	18	30	82	Rc1/8	32.5	71	M10×1.25	6	213	12	5	10	42	21.5	16	32
ø 32	22	17	20	37	67	Rc1/4	42	57	M10×1.25	6	197	12	5	10	42	25	20	30
ø 40	22	22	20	46	73	Rc1/4	45.5	57	M14×1.5	8	203	16	6	14	57	25	20	32
ø 50	28	27	26	56.4	77	Rc3/8	47.5	60	M18×1.5	11	211	20	7	17	62	24.5	20	33
ø 63	28	27	26	69.4	69	Rc3/8	42	65	M18×1.5	11	214	20	7	17	62	29	25	38
ø 80	36	32	34	88	73	Rc1/2	45	70	M22×1.5	13	232	25	10	22	86	31.5	25	42
ø100	45	41	43	108	72	Rc1/2	42	72	M26×1.5	16	235	30	11	27	86	30	30	48

Code			Mounting method											With switch		
Bore size (mm)	Y	YA	LA	LB	LC	LD	LE	LF	LG	LH	LK	LM	LS	HD	P	RD
ø 20	34	22	295	8	20	4	263	30	3.2	40	6.6	19	54	15.5	28	17.5
ø 25	32.5	21.5	293	8	20	12	253	30	3.2	40	6.6	19	54	13	34	14.5
ø 32	42	25	277	8	20	10	237	30	3.2	40	6.6	19	54	22	35	21
ø 40	45.5	25	289	10	22	10	247	40	3.2	40	9	24	58	22	39	21
ø 50	47.5	24.5	307	10	25	8	261	45	4.5	45	9	29	63	19	44	25
ø 63	42	29	318	13	25	13	264	53	5.5	60	11	36.5	86	21	52	28
ø 80	45	31.5	355	15	30	12	292	63	8	71	14	45	102	24.5	114	33.5
ø100	42	30	373	15	30	18	295	75	8	85	14	54	118	25	134	35

LCM
LCR
LCG
LCW
LCX
STM
STG
STS/STL
STR2
UCA2
ULK*
JSK/M2
JSG
JSC3/JSC4
USSD
UFCD
USC
UB
JSB3
LMB
LML
HCM
HCA
LBC
CAC4
UCAC2
CAC-N
UCAC-N
RCS2
RCC2
PCC
SHC
MCP
GLC
MFC
BBS
RRC
GRC
RV3*
NHS
HRL
LN
Hand
Chuk
MecHnd/Chuk
ShkAbs
FJ
FK
SpdContr
Ending

Dimensions

● Rod side flange (FA)

ø20, ø25

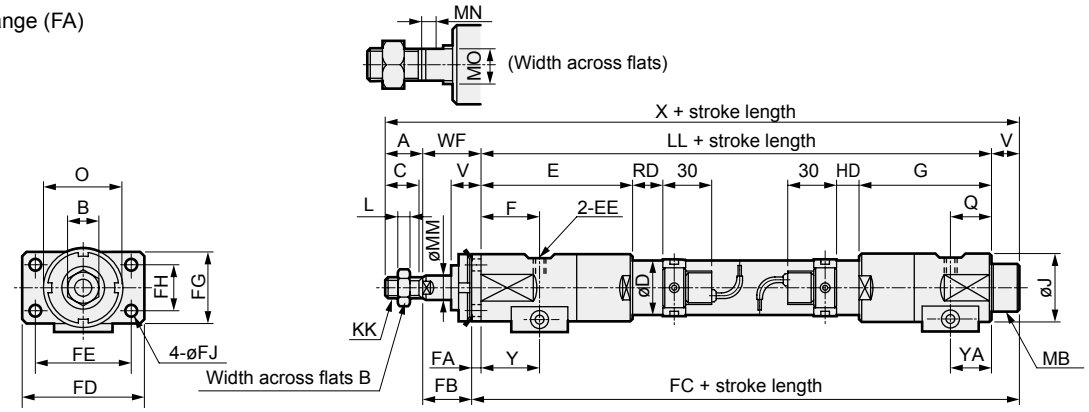

ø32 to ø63

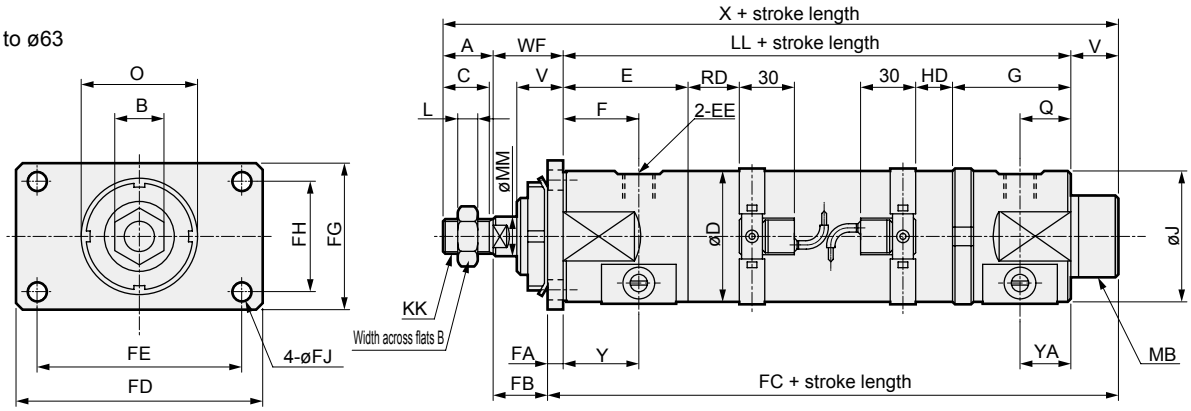

ø80, ø100

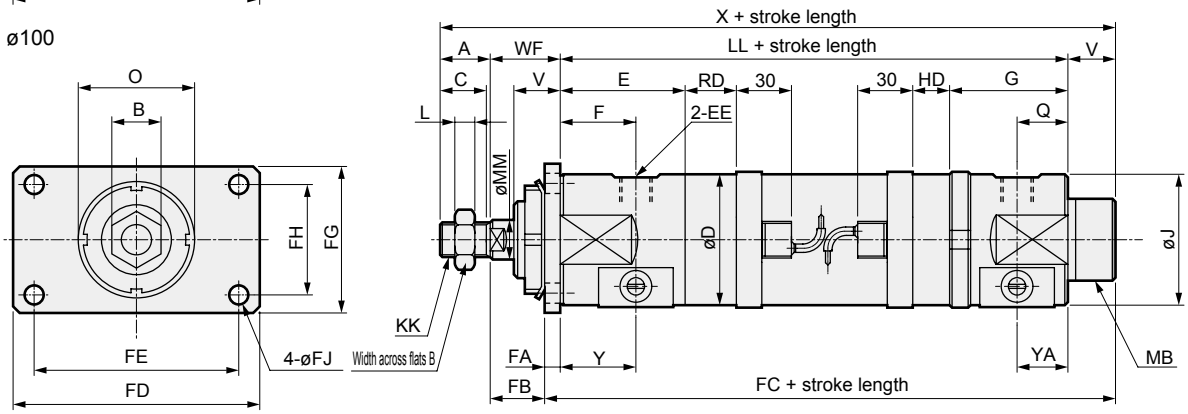

*1 : For the dimensions of the accessories, refer to page 987.

Code	Rod side flange (FA) basic dimensions																	
Bore size (mm)	A	B	C	D	E	EE	F	G	J	KK	L	LL	MB	MM	MN	MO	O	Q
ø 20	20	13	18	25	86	Rc1/8	34	74	33	M8×1	5	223	M25×1.5	10	4	8	42	22
ø 25	20	17	18	30	82	Rc1/8	32.5	71	37	M10×1.25	6	213	M25×1.5	12	5	10	42	21.5
ø 32	22	17	20	37	67	Rc1/4	42	57	37	M10×1.25	6	197	M25×1.5	12	5	10	42	25
ø 40	22	22	20	46	73	Rc1/4	45.5	57	46	M14×1.5	8	203	M35×1.5	16	6	14	57	25
ø 50	28	27	26	56.4	77	Rc3/8	47.5	60	56	M18×1.5	11	211	M40×1.5	20	7	17	62	24.9
ø 63	28	27	26	69.4	69	Rc3/8	42	65	69.4	M18×1.5	11	214	M40×1.5	20	7	17	62	29
ø 80	36	32	34	88	73	Rc1/2	45	70	88	M22×1.5	13	232	M60×2	25	10	22	86	31.5
ø100	45	41	43	108	72	Rc1/2	42	72	108	M26×1.5	16	235	M60×2	30	11	27	86	30

Code						Mounting dimensions								With switch	
Bore size (mm)	V	WF	X	Y	YA	FA	FB	FC	FD	FE	FG	FH	FJ	HD	RD
ø 20	16	24	283	34	22	4.5	19.5	243.5	66	52	38	24	6.6	15.5	17.5
ø 25	16	32	281	32.5	21.5	4.5	27.5	233.5	66	52	38	24	6.6	13	14.5
ø 32	20	30	269	42	25	4.5	25.5	221.5	66	52	38	24	6.6	22	21
ø 40	20	32	277	45.5	25	9	23	232	100	80	58	40	9	22	21
ø 50	20	33	292	47.5	24.5	9	24	240	108	90	65	45	9	19	25
ø 63	25	38	305	42	29	9	29	248	134	112	80	60	11	21	28
ø 80	25	42	335	45	31.5	14	28	271	160	132	100	71	14	24.5	33.5
ø100	30	48	358	42	30	14	34	279	178	150	114	85	14	25	35

LCM
LCR
LCG
LCW
LCX
STM
STG
STS/STL
STR2
UCA2
ULK*
JSK/M2
JSG
JSC3/JSC4
USSD
UFCD
UFCD
UB
JSB3
LMB
LML
HCM
HCA
LBC
CAC4
UCAC2
CAC-N
UCAC-N
RCS2
RCC2
PCC
SHC
MCP
GLC
MFC
BBS
RRC
GRC
RV3*
NHS
HRL
LN
Hand
Chuk
MecHnd/Chuk
ShkAbs
FJ
FK
SpdContr
Ending

Dimensions

● Head side flange (FB)

ø20, ø25

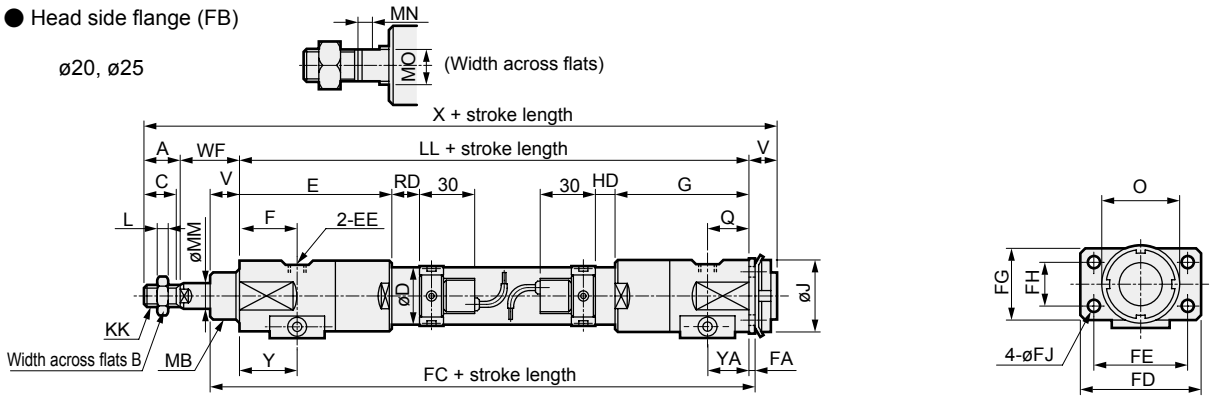

ø32 to ø63

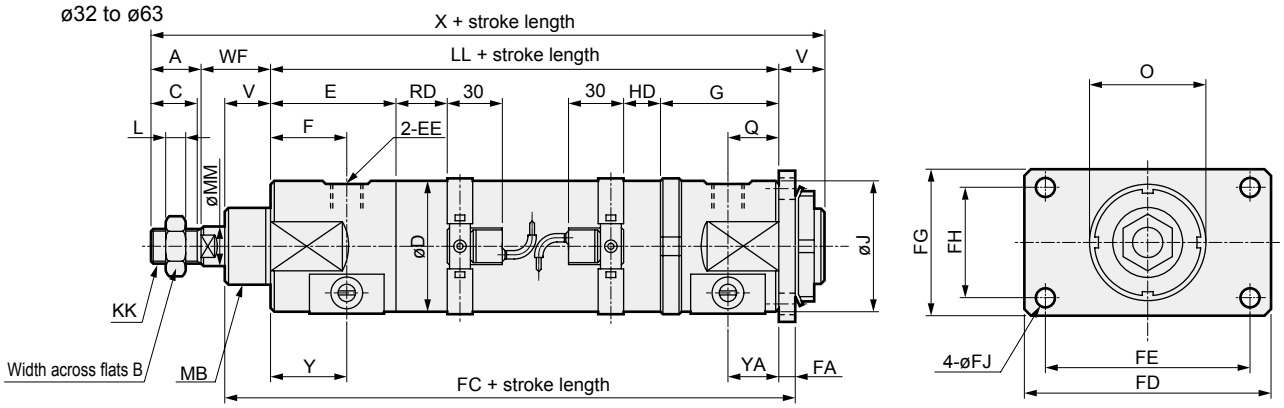

ø80, ø100

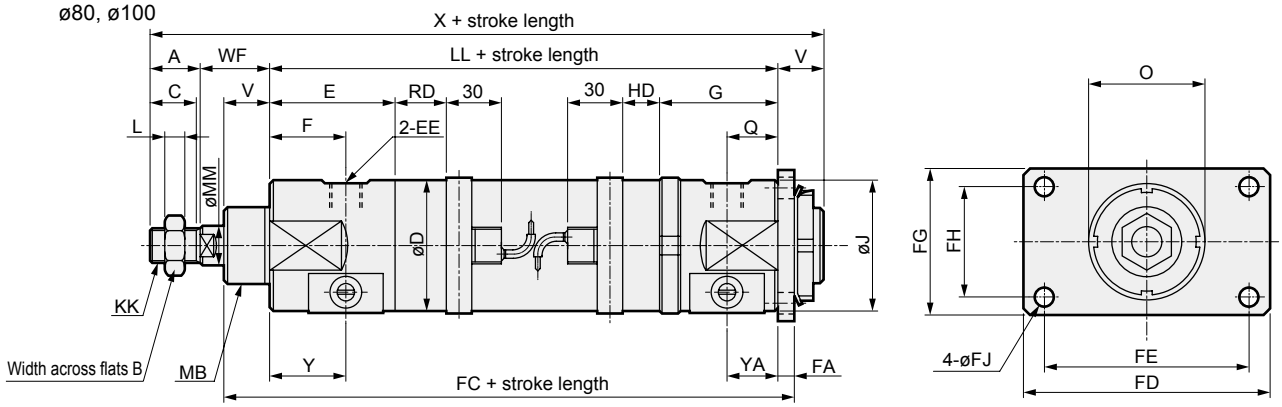

*1 : For the dimensions of the accessories, refer to page 987.

Code	Head side flange (FB) basic dimensions																	
Bore size (mm)	A	B	C	D	E	EE	F	G	J	KK	L	LL	MB	MM	MN	MO	O	Q
ø 20	20	13	18	25	86	Rc1/8	34	74	33	M8×1	5	223	M25×1.5	10	4	8	42	22
ø 25	20	17	18	30	82	Rc1/8	32.5	71	37	M10×1.25	6	213	M25×1.5	12	5	10	42	21.5
ø 32	22	17	20	37	67	Rc1/4	42	57	37	M10×1.25	6	197	M25×1.5	12	5	10	42	25
ø 40	22	22	20	46	73	Rc1/4	45.5	57	46	M14×1.5	8	203	M35×1.5	16	6	14	57	25
ø 50	28	27	26	56.4	77	Rc3/8	47.5	60	56	M18×1.5	11	211	M40×1.5	20	7	17	62	24.5
ø 63	28	27	26	69.4	69	Rc3/8	42	65	69.4	M18×1.5	11	214	M40×1.5	20	7	17	62	29
ø 80	36	32	34	88	73	Rc1/2	45	70	88	M22×1.5	13	232	M60×2	25	10	22	86	31.5
ø100	45	41	43	108	72	Rc1/2	42	72	108	M26×1.5	16	235	M60×2	30	11	27	86	30

Code						Mounting dimensions							With switch	
Bore size (mm)	V	WF	X	Y	YA	FA	FD	FE	FG	FH	FJ	FI	HD	RD
ø 20	16	24	283	34	22	4.5	66	52	38	24	6.6	251.5	15.5	17.5
ø 25	16	32	281	32.5	21.5	4.5	66	52	38	24	6.6	233.5	13	14.5
ø 32	20	30	269	42	25	4.5	66	52	38	24	6.6	231.5	22	21
ø 40	20	32	277	45.5	25	9	100	80	58	40	9	244	22	21
ø 50	20	33	292	47.5	24.5	9	108	90	65	45	9	253	19	25
ø 63	25	38	305	42	29	9	134	112	80	60	11	248	21	28
ø 80	25	42	335	45	31.5	14	160	132	100	71	14	271	24.5	33.5
ø100	30	48	358	42	30	14	178	150	114	85	14	279	25	35

Accessory dimensions

● Rod eye/clevis dimensions (ø20/25/32)

Rod eye (I)

Material: Steel
Zinc chromate treatment

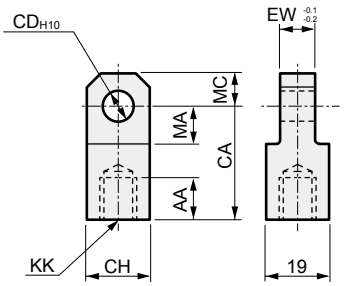

Model No.	Applicable bore size (mm)	AA	CA	CD	CH	EW	KK	MA	MC	Weight (g)
M1-I-20	20	14	30	10	19	8	M8×1	13	10	60
M1-I-30	25/32	14	36	12	25	10	M10×1.25	16	12	110

Rod clevis (Y)

Material: Steel
Zinc chromate treatment

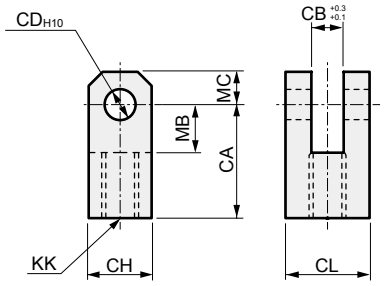

Note : A pin, a washer and a split pin are attached.

Model No.	Applicable bore size (mm)	CA	CB	CD	CH	CL	KK	MB	MC	Weight (g)
M1-Y-20	20	30	8	10	19	19	M8×1	13	10	100
M1-Y-30	25/32	36	10	12	25	25	M10×1.25	16	12	210

● Rod eye/clevis dimensions (ø40/50/63/80/100)

Rod eye (I)

Material: Cast iron
Painting

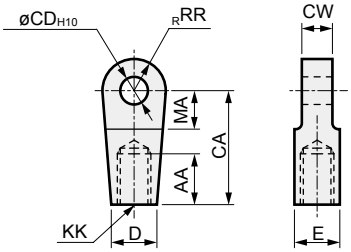

Model No.	Bore size (mm)	AA	CA	CD	CW	D	E	KK	MA	RR	Weight (kg)
S1-I-40	40	20	50	12	18 -0.1 -0.4	27	27	M14×1.5	21	16	0.26
S1-I-50	50	21	50	12	18 -0.1 -0.4	27	27	M18×1.5	21	16	0.24
S1-I-63	63	21	50	14	20 -0.1 -0.4	27	27	M18×1.5	21	16	0.25
S1-I-80	80	30	70	20	28 -0.1 -0.4	46	41	M22×1.5	30	25	0.88
S1-I-100	100	30	70	20	22 -0.1 -0.4	46	41	M26×1.5	30	25	0.84

Rod clevis (Y)

Material: Cast iron
Painting

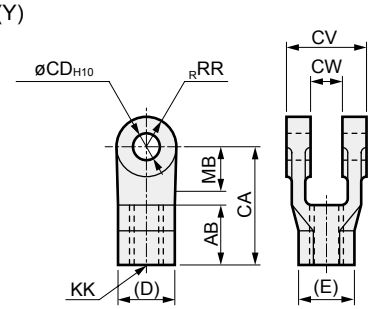

Model No.	Bore size (mm)	AB	CA	CD	CV	CW	D	E	KK	MB	RR	Weight (kg)
S1-Y-40	40	24	50	12	36	18 +0.4 +0.1	27	31.2	M14×1.5	19	16	0.25
S1-Y-50	50	24	50	12	36	18 +0.4 +0.1	27	31.2	M18×1.5	19	16	0.24
S1-Y-63	63	24	50	14	40	20 +0.4 +0.1	27	31.2	M18×1.5	19	16	0.26
S1-Y-80	80	35	70	20	56	28 +0.4 +0.1	41	47.3	M22×1.5	30	25	0.90
S1-Y-100	100	35	70	20	56	28 +0.4 +0.1	41	47.3	M26×1.5	30	25	0.85

*1 : Pin and snap ring are attached.
*2 : The MB dimension is the effective length of the CW dimension.

● Pin dimensions

Pin (P) (ø20/30)

Material: Steel
Zinc chromate treatment

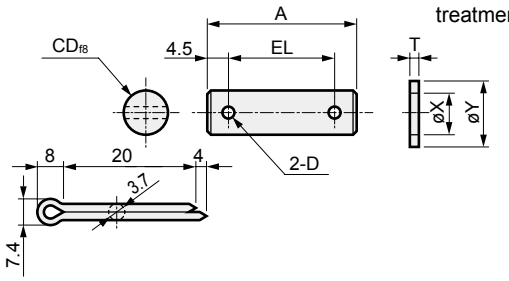

Model No.	Applicable bore size (mm)	A	D	CD	EL	T	X	Y	Weight (g)
M1-P-20	20	37	4	10	28	2	10.5	18	30
M1-P-30	25/32	46	4	12	37	2.5	13	21	50

Note : A pin, a washer and a split pin for rod clevis use are attached with the product.

Pin (P) (ø40/50/63/80/100)

Material: Steel
Zinc chromate treatment

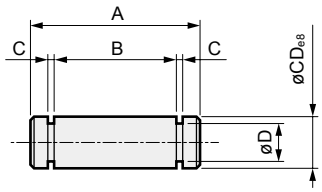

Model No.	Applicable bore size (mm)	A	B	C	D	CD	Weight (g)	Applicable snap ring
S1-P-40	40/50	43.5	36.2	1.15	11.5	12	40	C type for shaft 12
S1-P-63	63	47.5	40.2	1.15	13.4	14	60	C type for shaft 14
S1-P-80	80/100	64	56.2	1.35	19	20	100	C type for shaft 20

Note : A pin and a snap ring for rod clevis use are attached with the product.

* Specify the model No. when placing an order.

LCM
LCR
LCG
LCW
LCX
STM
STG
STS/STL
STR2
UCA2
ULK*
JSK/M2
JSG
JSC3/JSC4
USSD
UFCD
UFCD
UB
JSB3
LMB
LML
HCM
HCA
LBC
CAC4
UCAC2
CAC-N
UCAC-N
RCS2
RCC2
PCC
SHC
MCP
GLC
MFC
BBS
RRC
GRC
RV3*
NHS
HRL
LN
Hand
Chuk
MecHnd/Chuk
ShkAbs
FJ
FK
SpdContr
Ending

Selection guide

When using a high speed cylinder, take into account the cylinder speed and kinetic energy in particular.

Step 1 High speed cylinder selection guide

For pneumatic cylinders, average speed is different from maximum speed rush into cushion because of compressibility fluid.
When operating load W with average speed V1, find the required composite effective sectional area S and the maximum speed V according to the following table.
This table is for reference only. Some values may vary depending on load direction and pipe length, etc.

Average speed and max. speed at load factor of high speed cylinder (when air pressure = 0.5 MPa)

Bore size (mm)	Average speed / Load factor	V1=500 mm/s			V1=1,000 mm/s			V1=2,000 mm/s		
		10%	20%	30%	10%	20%	30%	10%	20%	30%
ø20 (A2=2.356)	W	1.57	3.14	4.71	1.57	3.14	4.71	1.57	3.14	4.71
	S	0.80	0.89	0.98	1.60	1.78	1.96	3.19	3.56	3.93
	V	630	689	714	1,260	1,378	1,482	2,512	2,756	2,971
ø25 (A2=3.778)	W	2.45	4.91	7.36	2.45	4.91	7.36	2.45	4.91	7.36
	S	1.28	1.43	1.57	2.56	2.85	3.15	5.12	5.71	6.30
	V	628	690	740	1,257	1,376	1,485	2,514	2,757	2,970
ø32 (A2=6.912)	W	4.02	8.04	12.1	4.02	8.04	12.1	4.02	8.04	12.1
	S	2.34	2.61	2.88	4.68	5.22	5.76	9.36	12.4	11.5
	V	630	692	747	1,261	1,383	1,494	2,521	2,758	2,983
ø40 (A2=10.56)	W	6.28	12.6	18.8	6.28	12.6	18.8	6.28	12.6	18.8
	S	3.57	3.99	4.40	7.15	7.97	8.80	14.3	15.9	17.6
	V	630	693	747	1,261	1,383	1,494	2,521	2,765	2,988
ø50 (A2=16.49)	W	9.82	19.6	29.5	9.82	19.6	29.5	9.82	19.6	29.5
	S	5.58	6.23	6.87	11.2	12.5	13.7	22.3	24.9	27.5
	V	630	693	747	1,265	1,389	1,490	2,518	2,768	2,990
ø63 (A2=28.03)	W	15.6	31.2	46.8	15.6	31.2	46.8	15.6	31.2	46.8
	S	9.49	10.6	11.7	19.0	21.2	23.4	38.0	42.3	46.7
	V	632	694	749	1,266	1,389	1,498	2,531	2,771	2,989
ø80 (A2=45.36)	W	25.1	50.3	75.4	25.1	50.3	75.4	25.1	50.3	75.4
	S	15.4	17.1	18.9	30.7	34.3	37.8	61.4	68.5	75.6
	V	634	692	744	1,264	1,388	1,495	2,527	2,773	2,990
ø100 (A2=71.47)	W	39.3	78.5	118	39.3	78.5	118	39.3	78.5	118
	S	24.2	27.0	29.8	48.4	54.0	59.6	96.8	108	119
	V	632	694	748	1,264	1,387	1,496	2,529	2,774	2,987

W: Load weight (kg) S: Composite effective sectional area (mm^2) V: Max. speed (mm/s) V1: Average speed (mm/s) A2: Piston rod side cross-section areas (cm^2)

For example, when using HCA-40 with load 6.28 kgf (load factor 10%, 0.5 MPa) and average speed V1 = 2000 mm/s, the maximum speed is 2,521 mm/s (1.26 times higher). In this case, the required composite effective sectional area is 14.3 mm^2.

Select system components matched to composite effective sectional area from the table on the following page.

System selection guide table

Appropriate system matched to the required cylinder speed according to bore size can be selected.

Bore size	Port size	Required effective cross-sectional area (mm^2)	4.5 port valve for pneumatic control: Single solenoid	4.5 port valve for pneumatic control: Double solenoid	Pneumatic auxiliary components: Speed controller	Pneumatic auxiliary components: Silencer	Piping: Piping (l/m) (between valve&cylinder)
ø20	Rc1/8	1.3	4KA110-M5/4KB110-06 4GA110R-M5/4GB110R-06	4KA120-M5/4KB120-06 4GA120R-M5/4GB120R-06	SC3W-6/SC3R-6	SLW-6A	ø4×2.5NT
		2.0	4KA110-M5/4KB110-06 4GA110R-M5/4GB110R-06	4KA120-M5/4KB120-06 4GA120R-M5/4GB120R-06	SC3R-6	SLW-6A	ø6×ø4NT
		2.8	4KA210-06/4KB210-06 4GA210R-06/4GB210R-08	4KA220-06/4KB220-06 4GA220R-06/4GB220R-08	SC3R-6	SLW-6A	ø8×ø5.7NT
		3.6	4KA210-06/4KB210-06 4GA210R-06/4GB210R-08	4KA220-06/4KB220-06 4GA220R-06/4GB220R-08	SC1-6	SLW-6A	ø6×ø4NT
		4.3	4KA210-06/4KB210-06 4GA210R-06/4GB210R-08	4KA220-06/4KB220-06 4GA220R-06/4GB220R-08	SC1-6	SLW-6A	ø8×ø5.7NT
ø25	Rc1/8	1.4	4KA110-M5/4KB110-06 4GA110R-M5/4GB110R-06	4KA120-M5/4KB120-06 4GA120R-M5/4GB120R-06	SC3W-6	SLW-6A	ø4×ø2.5NT
		2.4	4KA110-M5/4KB110-06 4GA110R-M5/4GB110R-06	4KA120-M5/4KB120-06 4GA120R-M5/4GB120R-06	SC3W-6	SLW-6A	ø6×ø4NT
		4.4	4KA210-06/4KB210-06 4GA210R-06/4GB210R-08	4KA220-06/4KB220-06 4GA220R-06/4GB220R-08	SC1-6	SLW-6A	ø6×ø4NT
		5.8	4KA210-06/4KB210-06 4GA210R-06/4GB210R-08	4KA220-06/4KB220-06 4GA220R-06/4GB220R-08	SC1-6	SLW-6A	ø8×ø5.7NT
		6.6	4KA210-06/4KB210-06 4GA210R-06/4GB210R-08	4KA220-06/4KB220-06 4GA220R-06/4GB220R-08	SC1-8	SLW-6A	ø10×ø7.2NT
ø32	Rc1/4	3.6	4KB210-08/4GB210R-08	4KB220-08/4GB220R-08	SC3W-8/SC3R-8	SLW-8A	ø6×ø4NT
		5.9	4KB210-08/4GB210R-08	4KB220-08/4GB220R-08	SC1-8	SLW-8A	ø8×ø5.7NT
		8.4	4F210-08/4KB310-08 4GB310R-08	4F220-08/4KB320-08 4GB320R-08	SC1-8	SLW-8A	ø10×ø7.2NT
		9.5	4KB310-08/4F310-08 4GB310R-08	4KB320-08/4F320-08 4GB320R-08	SC1-8	SLW-8A	ø10×ø7.2NT
		11.6	4F310-08/4F410-08 4GB310R-08	4F320-08/4F420-08 4GB320R-08	SC3W-10/SC3R-10	SLW-8A	ø12×ø8.9NT
ø40	Rc1/4	3.6	4KB210-08/4GB310R-08	4KB220-08/4GB320R-08	SC3W-8/SC3R-8	SLW-8A	ø6×ø4NT
		8.5	4F210-08/4KB310-08 4GB310R-08	4F220-08/4KB320-08 4GB320R-08	SC1-8	SLW-8A	ø10×ø7.2NT
		12.0	4F310-08/4F410-08 4GB310R-08	4F320-08/4F420-08 4GB320R-08	SC3W-10/SC3R-10	SLW-8A	ø12×ø8.9NT
		15.2	4F410-08	4F420-08	SC-1-10	SLW-8A	ø12×ø8.9NT
		18.4	4F510-10	4F520-10	SC-1-10	SLW-10A	ø15×ø11.5NT
ø50	Rc3/8	5.5	4KB310-10/4F310-10	4KB320-10/4F320-10	SC3W-10/SC3R-10	SLW-10A	ø6×ø4NT
		12.0	4K310-10/4F310-10	4K320-10/4F320-10	SC3W-10/SC3R-10	SLW-10A	ø12×ø8.9NT
		18.1	4F510-10	4F520-10	SC1-10	SLW-10A	ø12×ø8.9NT
		23.5	4F510-10	4F520-10	SC1-15	SLW-10A	ø15×ø11.5NT
		26.9	4F610-15	4F620-15	SC1-15	SLW-15A	ø15×ø11.5NT
ø63	Rc3/8	11.0	4K310-10/4F310-10	4K320-10/4F320-10	SC3W-10/SC3R-10	SLW-10A	ø10×ø7.2NT
		18.0	4K410-10/4F510-10	4K420-10/4F520-10	SC1-10	SL-10A	ø10×ø7.2NT
		26.9	4F610-15	4F620-15	SC1-15	SLW-15A	ø10×ø8.9NT
		43.1	4F610-15	4F620-15	SC-20A	SLW-15A	ø15×ø11.5NT
		62.8	4F610-20	4F620-20	SC-20A	SL-20A	Rc1/2 steel pipe
ø80	Rc1/2	19.5	4F610-15	4F620-15	SC3W-15/SC3R-15	SLW-15A	ø12×ø8.9NT
		31.3	4F610-15	4F620-15	SC1-15	SLW-15A	ø15×ø11.5NT
		67.4	4F610-20	4F620-20	SC-20A	SL-20A	Rc3/4 steel pipe
		85.9	4F710-20	4F720-20	SC-20A	SL-20A	Rc3/4 steel pipe
		95.9	4F710-20	4F720-20	SC-25A	SL-20A	Rc3/4 steel pipe
ø100	Rc1/2	31.8	4F610-15	4F620-15	SC1-15	SLW-15A	ø15×ø11.5NT
		67.4	4F610-20	4F620-20	SC-20A	SL-20A	Rc3/4 steel pipe
		85.9	4F710-20	4F720-20	SC-20A	SL-20A	Rc3/4 steel pipe
		95.9	4F710-20	4F720-20	SC-25A	SL-20A	Rc3/4 steel pipe
		109.9	4F710-25	4F720-25	SC-25A	SL-25A	Rc3/4 steel pipe

● Pneumatics basic circuit diagram

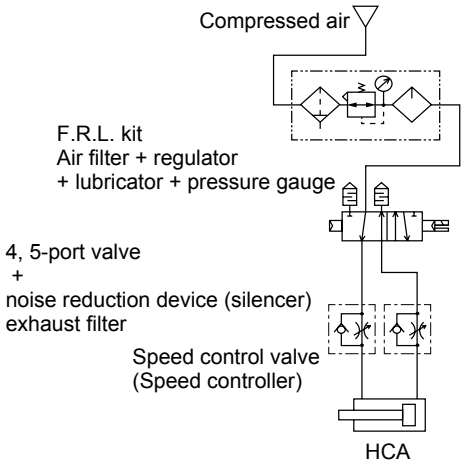

LCM
LCR
LCG
LCW
LCX
STM
STG
STS/STL
STR2
UCA2
ULK*
JSK/M2
JSG
JSC3/JSC4
USSD
UFCD
UFCD
UB
JSB3
LMB
LML
HCM
HCA
LBC
CAC4
UCAC2
CAC-N
UCAC-N
RCS2
RCC2
PCC
SHC
MCP
GLC
MFC
BBS
RRC
GRC
RV3*
NHS
HRL
LN
Hand
Chuk
MecHnd/Chuk
ShkAbs
FJ
FK
SpdContr
Ending

Step 2 High speed cylinder selection guide

Use the following table to determine the model according to the relation between load W and maximum speed V.

High speed cylinder energy absorption graph

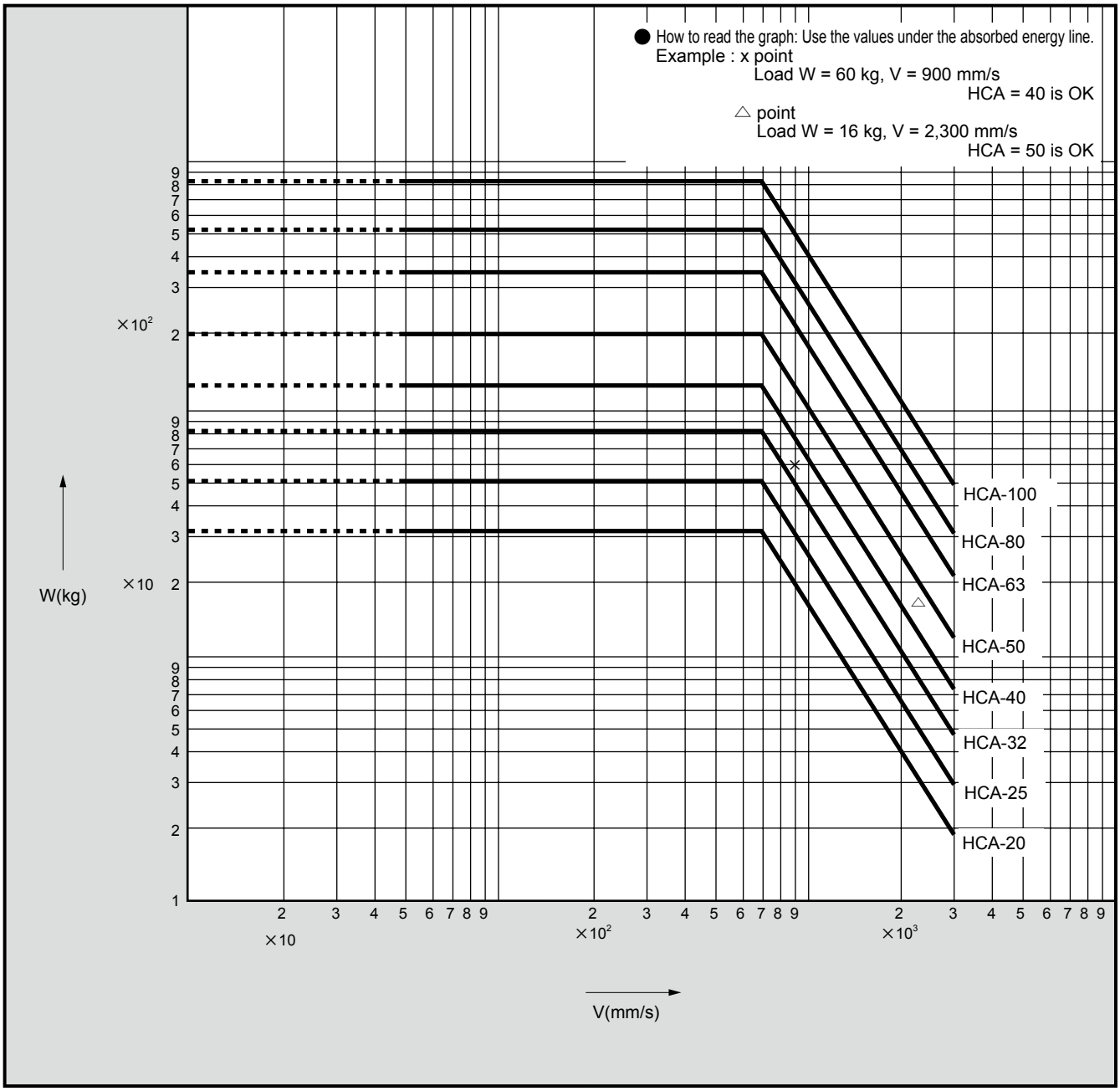

Note : This is a log-log graph.

For example, when load W = 16kg, and maximum speed 2,300 mm/s, △ shows that HCA-40 does not meet the conditions, but HCA-50 does.

Pneumatic components

Safety Precautions

Be sure to read this section before use.

Refer to Intro Page 73 for general information of the cylinder, and to Intro Page 80 for general information of the cylinder switch.

Product-specific cautions: High speed cylinder HCA Series

Design/selection

⚠ CAUTION

■ Avoid using the product so as to apply lateral load to the piston rod of the cylinder. The required speed may not be attained, bearings may wear abnormally, and performance may drop.

■ Cushion
The air cushion absorbs kinetic energy that the piston generates by using air compressibility and prevents the piston and cover from colliding at the stroke end. Therefore, note that it is not a function for reducing the piston speed near the stroke end.

■ Consider the system selection guide of the cylinder only as a guideline, as it may vary depending on the operating conditions (working pressure, travel method and direction of the load and piping length).

■ Operating the cylinder at high speed increases the instantaneous flow rate of the air, allowing drainage to accumulate more easily. Provide an air tank to prevent drain from entering the cylinder and to prevent pressure loss when filtering oil mist.

Mounting, installation and adjustment

⚠ CAUTION

■ The cylinder has been designed for high-speed use, and the JISB1554 nut (ball bearing lock nut, washer and clasp) is used to prevent loosening when mounting the body. Use the following hook spanner wrench when fixing mounting brackets on the body, and when loosening the lock nut to disassemble the body.

(1) When fixing mounting brackets on the body

Model No. / Item	HCA-20	HCA-25	HCA-32	HCA-40
Nut used	AN05	AN05	AN05	AN07
Hook spanner wrench size	Nominal 34-38	Nominal 34-38	Nominal 34-38	Nominal 45-50
Model No. / Item	**HCA-50**	**HCA-63**	**HCA-80**	**HCA-100**
Nut used	AN08	AN08	AN12	AN12
Hook spanner wrench size	Nominal 52-55	Nominal 58-62	Nominal 80-90	Nominal 80-90

(2) Tightening the body lock nut

Model No. / Item	HCA-20	HCA-25	HCA-32	HCA-40
Hook spanner wrench size			Nominal 34-48	Nominal 45-50
Wrench	Nominal 30	Nominal 35		
Model No. / Item	**HCA-50**	**HCA-63**	**HCA-80**	**HCA-100**
Hook spanner wrench size	Nominal 52-55	Nominal 68-75	Nominal 80-90	Nominal 110-115
Wrench				

■ Note that the working speed of 3000 mm/s is the max. speed, not the average speed.

■ The cylinder body restriction is designed for a speed of 3000 mm/s and over, and should not be constricted by piping, valves, or speed controllers.

■ When adjusting speed with the speed controller, gradually open the needle from the closed state and increase speed. The piston rod may suddenly pop out and create a hazard if speed is adjusted while the needle is open.

■ If operation is started while the exhaust side is at atmospheric pressure, the rod could pop out and cause a dangerous situation. Pressurize the exhaust side before starting.

■ Mount the speed controller near the cylinder piping port. Otherwise, speed cannot be controlled.

■ When the unit will be used where the specifications of the cushion (allowable absorbed energy) will be exceeded, provide a separate external shock absorber.

Special cylinder

	Page
Air bearing actuator **LBC** Series	995
Clamp cylinder **CAC4** Series	1005
Position locking clamp cylinder **UCAC2** Series	1029
Lightweight clamp cylinder **CAC-N32/40** Series	1043
Position locking clamp cylinder **UCAC-N32/40** Series	1052
Rotary clamp cylinder (Single guide) **RCS2** Series	1063
Rotary clamp cylinder **RCC2** Series	1095
Pin clamp cylinder **PCC** Series	1117
High power cylinder **SHC** Series	1137
Mechanical power cylinder **MCP** Series	1175
Guideless cylinder **GLC** Series	1193
Robot cylinder **MFC** Series	1213
Low sliding friction balancing cylinder **BBS** Series	1253

LBC

Air bearing actuator

Special

Overview

Air static pressure soft actuator based on non-contact air bearing mechanism with zero sliding resistance. The actuator enables sensitive and precise load control when combined with electro pneumatic regulator (EV).

CONTENTS

Product introduction	996
● Single acting/push (LBC)	998
⚠ Safety precautions	1004

Actuators breaking free of sliding resistance 0

LCM
LCR
LCG
LCW
LCX
STM
STG
STS/STL
STR2
UCA2
ULK*
JSK/M2
JSG
JSC3/JSC4
USSD
UFCD
USC
UB
JSB3
LMB
LML
HCM
HCA
LBC
CAC4
UCAC2
CAC-N
UCAC-N
RCS2
RCC2
PCC
SHC
MCP
GLC
MFC
BBS
RRC
GRC
RV3*
NHS
HRL
LN
Hand
Chuk
MecHnd/Chuk
ShkAbs
FJ
FK
SpdContr
Ending

LBC Series

Air bearing actuator

Minimum control load 0.01 N

Air static pressure type soft actuator LBC Series based on non-contact air bearing mechanism with zero sliding resistance.
The actuator enables sensitive and precise load control when combined with an electro-pneumatic regulator (EV).

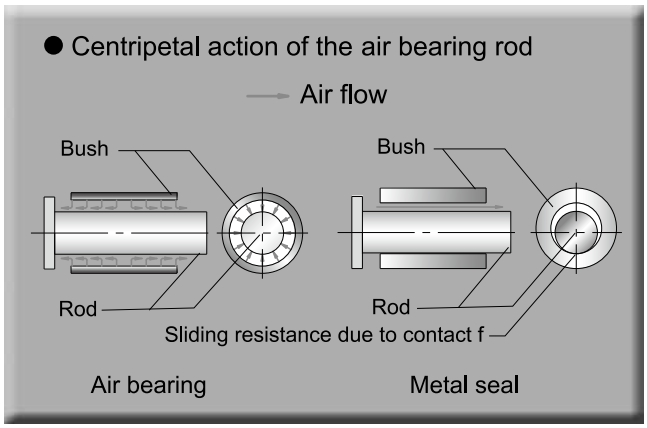

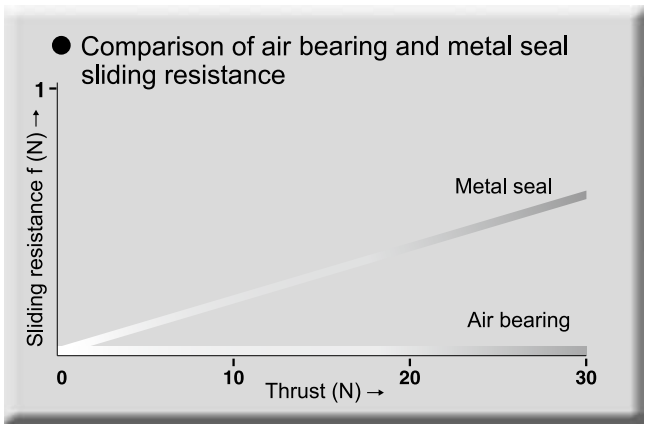

Appropriate for clean environments

Non-contact, non-lubricated air driving method without generating dust. The product is appropriate for clean environments.

Soft touch

Due to allowable minimum load control of 0.01 N, a soft touch on the workpiece is possible. The workpiece is not exposed to impact or damaged.

Optimum load for workpiece

The best load according to the purpose and application will be applied to the workpiece.

Excellent response

The rod (moving part) made of light aluminum alloy enables excellent response.

Space-saving & compact

High precision linear control

As there is no sliding resistance, high precision linear load control is possible with the electro-pneumatic regulator (EV-FL).

Applications (Note)

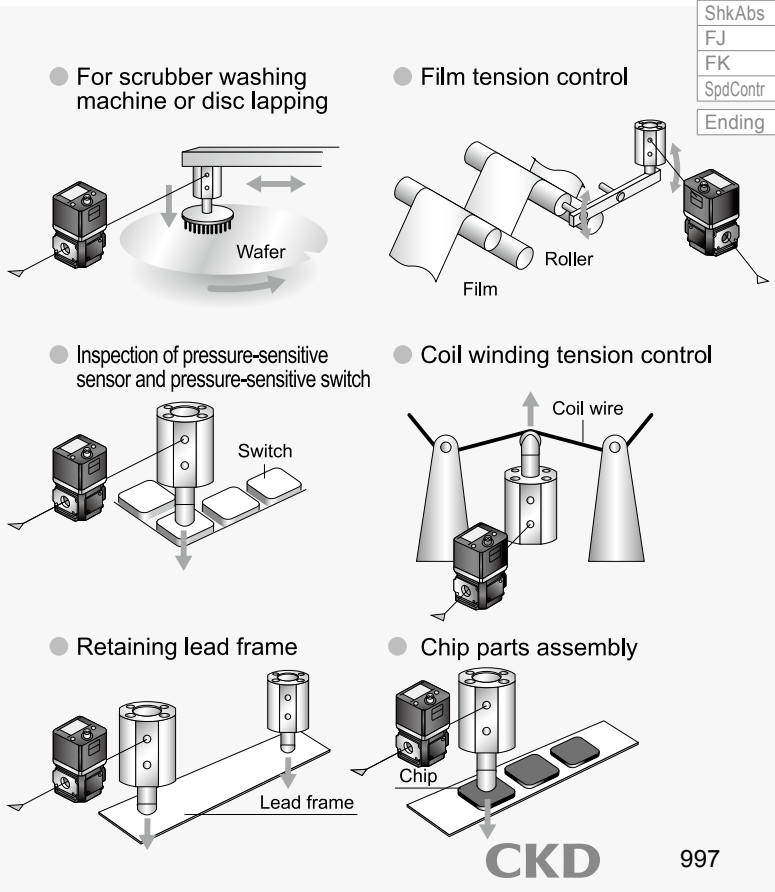

(Note) Rod return mechanism is not provided. If returning the rod is necessary in horizontal or vertical downward applications, combine any other cylinder to return the LBC itself.

Air bearing actuator
Single acting/push

LBC Series

Specifications

Item		LBC-01	LBC-05	LBC-30
Actuation		Single acting/push (*1)		
Working fluid		Clean compressed air (JIS B 8392-1: 2003 Grade 1.4.2 or equivalent)		
Working pressure MPa	Air bearing port	0.3 (≈44 psi, 3 bar) to 0.5 (≈73 psi, 5 bar)		
	Thrust port	0.002 (≈0.29 psi, 0.02 bar) to 0.1 (≈15 psi, 1 bar)		
Ambient temperature	°C	5 (41°F) to 35 (95°F)		
Proof pressure	MPa	0.75 (≈110 psi, 7.5 bar)		
Pressurized area	mm^2	10	50	314
Thrust range	N	0.02 to 1.0	0.1 to 5.0	0.6 to 31.4
Stroke length	mm	5^{+1}_{0}		30^{+1}_{0}
Allowable lateral load	N	1.2	0.8	4.0
Weight	g	50	45	345
Movable part weight (*2)	g	5	4.5	65
Bearing part air consumption (*3)	ℓ/min	2.5 or less	2.5 or less	7.5 or less

*1 : Rod return mechanism is not available.
*2 : Movable part weight indicates the total weight of rod, stopper and cross headed flat head screw.
*3 : Value when bearing pressure is 0.5 MPa

Thrust characteristics

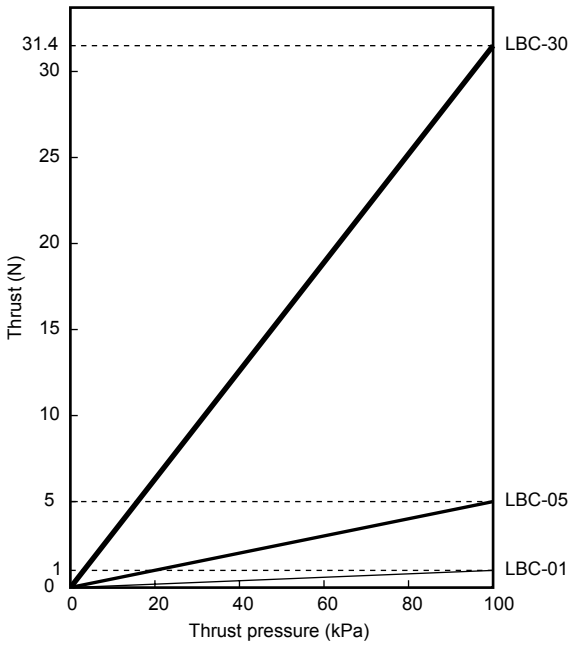

How to order

LBC - 01

Ⓐ Thrust

Code	Description
Ⓐ Thrust	
01	1N
05	5N
30	30N

Dimensions

● LBC-01

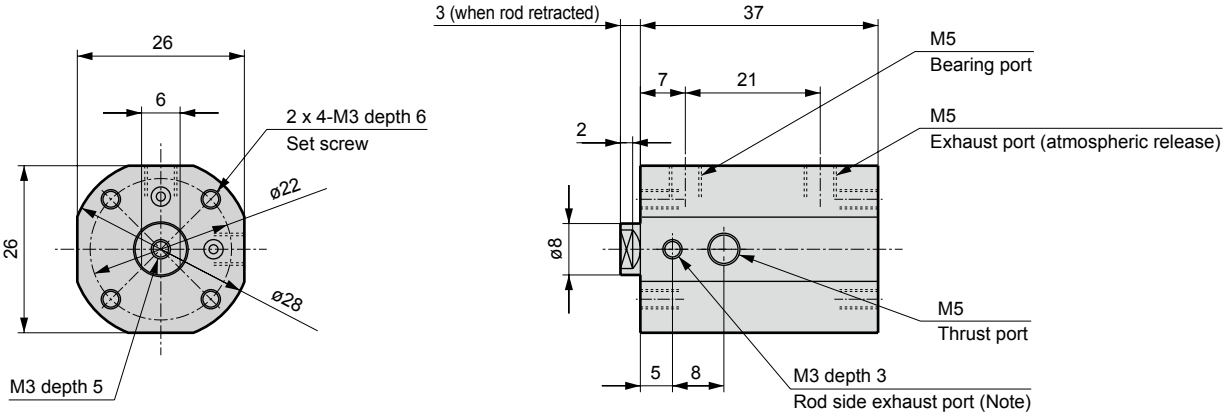

● LBC-05

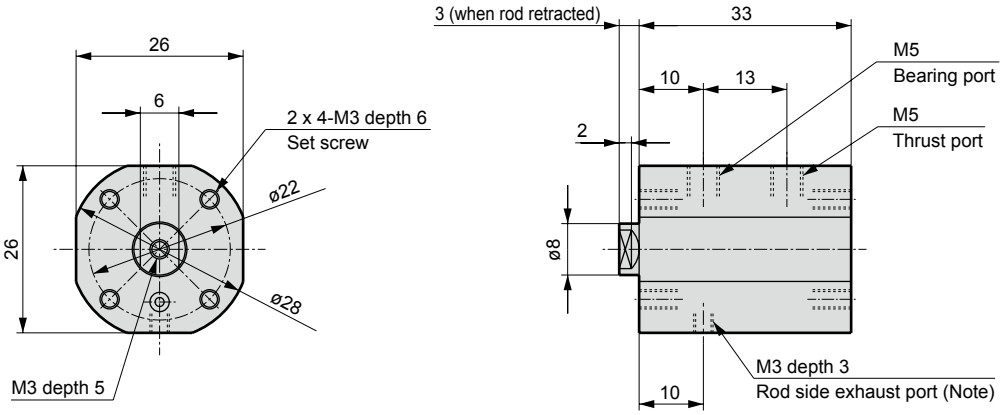

● LBC-30

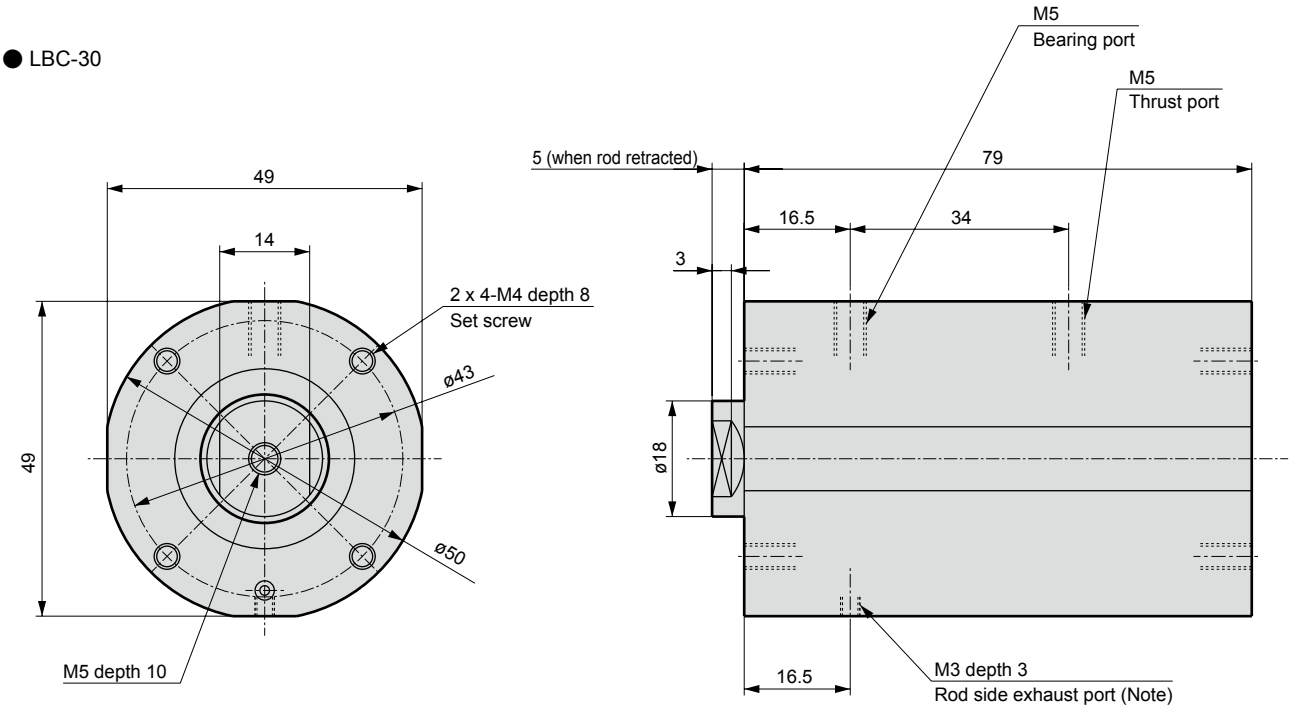

(Note) To prevent air leaks from the rod section, evacuate air from the rod side exhaust port using a vacuum generator.

LCM
LCR
LCG
LCW
LCX
STM
STG
STS/STL
STR2
UCA2
ULK*
JSK/M2
JSG
JSC3/JSC4
USSD
UFCD
USC
UB
JSB3
LMB
LML
HCM
HCA
LBC
CAC4
UCAC2
CAC-N
UCAC-N
RCS2
RCC2
PCC
SHC
MCP
GLC
MFC
BBS
RRC
GRC
RV3*
NHS
HRL
LN
Hand
Chuk
MecHnd/Chuk
ShkAbs
FJ
FK
SpdContr
Ending

Internal structure and parts list

● LBC-01

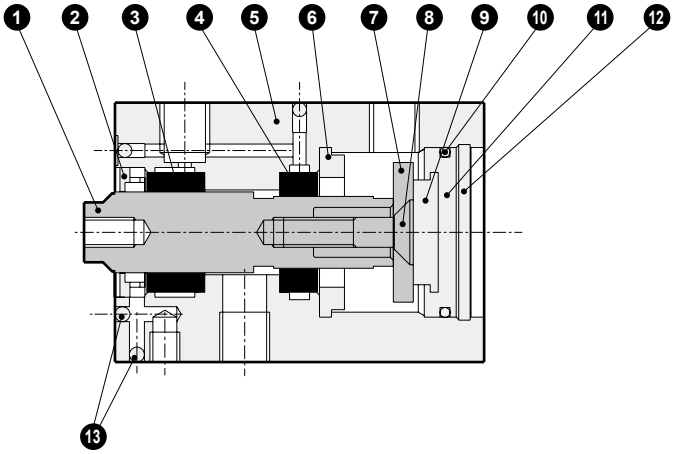

● LBC-05, 30

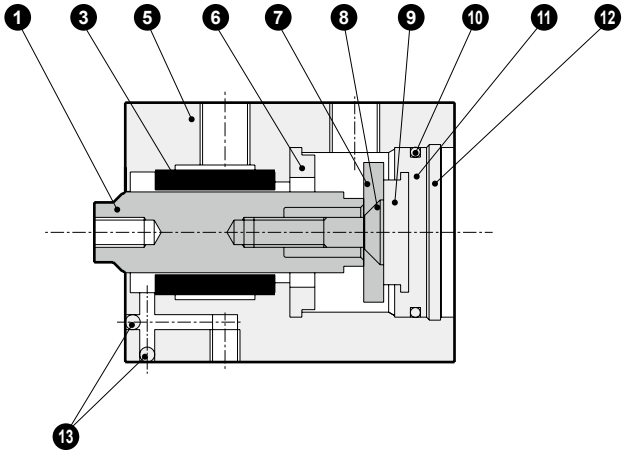

Cannot be disassembled

No.	Part name	Material	Remarks	No.	Part name	Material	Remarks
1	Rod	Aluminum alloy		8	Cross headed flat head screw	Stainless steel	
2	Cap	Aluminum alloy	Alumite	9	Cushion rubber R	Urethane rubber	
3	Bush 1	Carbon graphite porous material		10	Gasket	Nitrile rubber	
4	Bush 2	Carbon graphite porous material		11	Base plate	Special aluminum	Chromate
5	Body	Aluminum alloy	Alumite	12	Snap ring for hole	Stainless steel	
6	Cushion rubber L	Urethane rubber		13	Steel ball	Stainless steel	
7	Stopper	Aluminum alloy	Alumite				

Circuits used

When air is evacuating from the rod side exhaust port

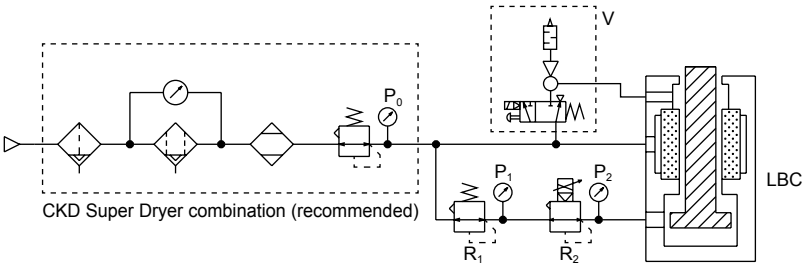

P_0: Air bearing port supply pressure (0.3 to 0.5 MPa)
P_1: Electro pneumatic regulator supply pressure (0.2 MPa)
P_2: Thrust port supply pressure (0.002 to 0.1 MPa)
R_1: Regulator
R_2: Electro pneumatic regulator for LBC
EV25**-FL (Refer to pages 1001 to 1003 for details.)
Details of customization
- Control pressure 0 to 0.1 MPa (Control pressure accuracy is improved)
- Fixed orifice (Pressure relief performance for low pressure range is improved)
- Normally open (NO)
(Prevents the rod from popping out when the power supply is turned OFF)

V : SELVACS (VSK)
(Only when necessary to prevent air leak from the rod section)

Electro pneumatic regulator for LBC (made to order)

EV2500 Series

- Electro pneumatic regulator for air bearing actuator LBC
- Pressure control range: 0 to 0.1 MPa
- Actuation: NO

JIS symbol

RoHS

Specifications

Item		EV2500-□08-FL			
Working fluid		Clean compressed air (JIS B 8392-1: 2012 Grade 1.3.2)			
Working pressure range		0.2 (≈29 psi, 2 bar) to 0.3 MPa (≈44 psi, 3 bar)			
Proof pressure		0.7 MPa (≈100 psi, 7 bar)			
Pressure control range		0 (≈0 psi, 0 bar) to 0.1 MPa (≈15 psi, 1 bar)			
Power supply voltage		24 VDC ± 10% (stabilized power supply with ripple rate 1% or less)			
Current consumption		0.1 A or less (0.6 A rush current when power is ON)			
Input signal (input impedance)		0 to 10 VDC (20 kΩ)	0 to 5 VDC (10 kΩ)	4 to 20 mADC or 1 to 5 VDC (250 Ω) *1	10 kΩ variable resistance or 0-10 VDC (20 kΩ)
Monitor output		1 to 1.8 VDC (none for 10 kΩ variable resistance input)			
Insulation resistance		100 MΩ (500 VDC) or more			
Withstand voltage		1500 VAC 1 min.			
Accuracy *2	Hysteresis	1% F.S. or less			
	Linearity	±0.5% F.S. or less			
	Resolution	0.5% F.S. or less			
	Repeatability	0.5% F.S. or less			
Temperature characteristics	Zero point fluctuation	0.75% F.S./°C or less			
	Span fluctuation	0.35% F.S./°C or less			
Step response *3		0.6 s or less			
Vibration resistance		98 m/s^2 or less (JISC60068-2-6)			
Operating ambient temperature range		5 to 50°C			
Mounting orientation		Free			
Port size		Rc1/4			
Weight		330 g			

*1 : When used with a signal voltage of 1 to 5 VDC, 4 to 20 mA of current flows into the EV interior from the signal source. Confirm specifications of the signal source before use.
*2 : The above characteristics are for FS 10 to 100% control pressure with a power supply voltage 24.0 VDC and a working pressure 0.3 MPa.
*3 : Working pressure: Max. working pressure and step feed: 50% F.S. → 100% F.S. 50%F.S. → 60%F.S. 50%F.S. → 40%F.S.

How to order

EV2500 - 0 08 - C11 B - FL298410

- Ⓐ Input signal
- Ⓑ Port size
- Ⓒ Other options (Cable option)
- Ⓒ Other options (Bracket option)
- Ⓓ (Identification number)

Code	Description
Ⓐ Input signal	
0	0 to 10 VDC
1	0 to 5 VDC
2	4 to 20 mADC or 1 to 5 VDC
3	10 kΩ variable resistance or 0-10 VDC (connected to 10 VDC built-in power supply)
Ⓑ Port size	
08	Rc1/4
Ⓒ Other options	
Cable option	
Blank	None
C11	1 m attached
C13	3 m attached
Bracket option	
Blank	None
B	C type bracket attached
B4	B type bracket attached
Ⓓ (Identification number)	
FL298410	For LBC-01
FL298411	For LBC-05
FL298412	For LBC-30

LCM
LCR
LCG
LCW
LCX
STM
STG
STS/STL
STR2
UCA2
ULK*
JSK/M2
JSG
JSC3/JSC4
USSD
UFCD
USC
UB
JSB3
LMB
LML
HCM
HCA
LBC
CAC4
UCAC2
CAC-N
UCAC-N
RCS2
RCC2
PCC
SHC
MCP
GLC
MFC
BBS
RRC
GRC
RV3*
NHS
HRL
LN
Hand
Chuk
MecHnd/Chuk
ShkAbs
FJ
FK
SpdContr
Ending

Dimensions

● EV2500-FL******

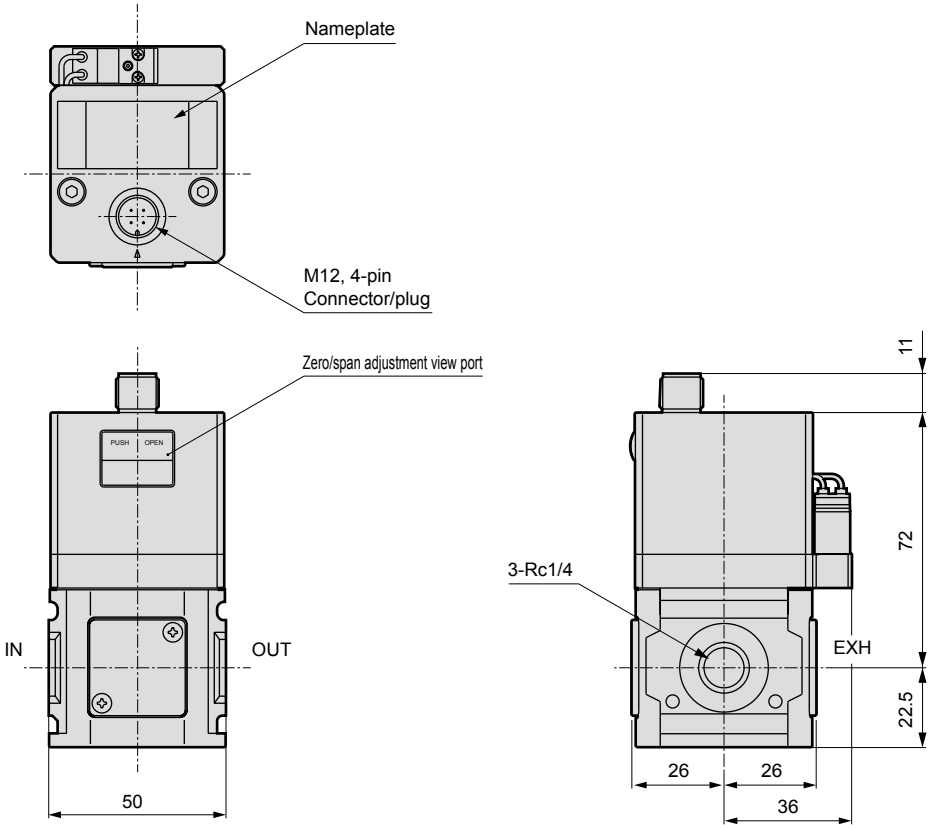

● Bracket option

B type bracket (-B4): floor mounted

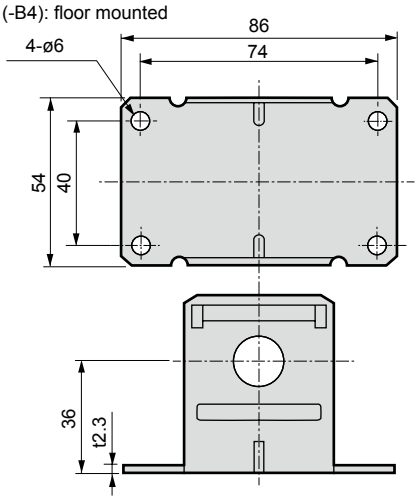

Material : SPCC
Treatment: Zinc plated
Weight : 165g

C type bracket (-B): wall mounted

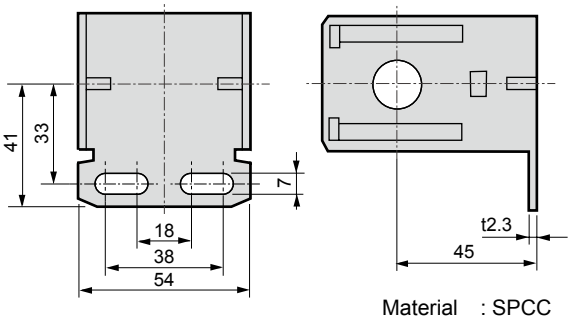

Material : SPCC
Treatment: Zinc plated
Weight : 148 g

● Cable option

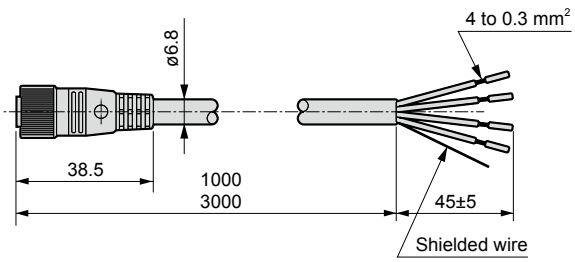

-C1* Shield/cable/connector

Pin No.	Insulator color	Applications	Type of input signal			
			0 to 10 V	0 to 5 V	4 to 20 mA 1 to 5 V	10 kΩVR (0 to 10 V)
1	Red	Power supply ⊕	24 V			
2	Green	——	Monitor output 1 to 1.8 V			VR input terminal
3	Black	Common	0 V			VR input terminal 0 V
4	White	Input signal	0 to 10 V	0 to 5 V	4 to 20 mA 1 to 5 V	VR output terminal (0 to 10 V)

If a cable connector is not used, the following recommended cable sockets (L type) can be used. Use a shielded wire cable.

Screw fixing	ELWIKA4012	Correns (Hirschmann)
Soldered	XS2C-D422	OMRON Corporation

LCM
LCR
LCG
LCW
LCX
STM
STG
STS/STL
STR2
UCA2
ULK*
JSK/M2
JSG
JSC3/JSC4
USSD
UFCD
USC
UB
JSB3
LMB
LML
HCM
HCA
LBC
CAC4
UCAC2
CAC-N
UCAC-N
RCS2
RCC2
PCC
SHC
MCP
GLC
MFC
BBS
RRC
GRC
RV3*
NHS
HRL
LN
Hand
Chuk
MecHnd/Chuk
ShkAbs
FJ
FK
SpdContr
Ending

Monitor output

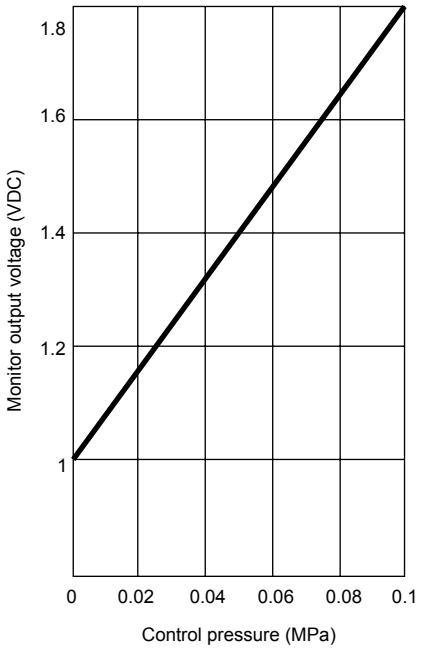

Safety precautions

Also refer to the precautions for the standard EV2000 Series.

1 Use clean compressed air that is free of any solids, moisture or oil for working fluid.
(JIS B 8392-1: 2012 Grade 1.3.2)

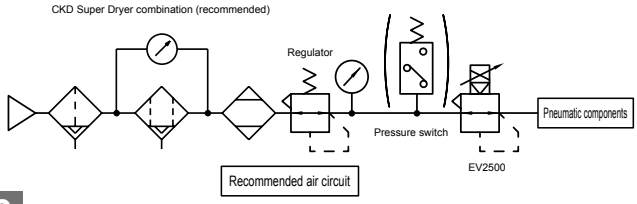

2 The working pressure is applied to supply the specified pressure for the control pressure. Ensure that the working pressure stays within the specified range. In particular, a prolonged unstable control pressure or a continued state where the control pressure exceeds 0 MPa and is set to 60% FS maximum when there is no working pressure can adversely affect product life. Avoid such conditions.

3 Unlike the standard EV2000 Series, the pilot operating pressure of this product is released (NO) when the power is OFF, which causes the secondary pressure to drop to atmospheric pressure.

4 This product constantly bleeds the secondary side for the purpose of controlling the flow rate from the bearing port of the air bearing actuator. Significant air flow occurs at the EXH port. For this reason, a loud exhaust noise can be heard from the EXH port, and pressure loss may occur depending on the diameter of the piping. To prevent such occurrences, consider taking the following countermeasures:

- For exhaust noise : Install a pipe on the EXH port to muffle the sound
- For pressure loss : Use a pipe with a larger port size or use a higher working pressure, etc.

Custom order

Available as a custom order. Contact CKD for details.

Air bearing cylinder Square shaft

- Non-rotating rod type optimal for precision part installation.
- Jig and rod self-weight cancellation mechanism can also be built in.
- Air flow path for suction and blowing can be built into the rod.
- Square shaft bearing requires no external rotation-stop mechanism.

Pneumatic components Warnings/cautions

Be sure to read this section before use.
* Refer to Intro Page 73 for cylinders in general.

LCM
LCR
LCG
LCW
LCX
STM
STG
STS/STL
STR2
UCA2
ULK*
JSK/M2
JSG
JSC3/JSC4
USSD
UFCD
USC
UB
JSB3
LMB
LML
HCM
HCA
LBC
CAC4
UCAC2
CAC-N
UCAC-N
RCS2
RCC2
PCC
SHC
MCP
GLC
MFC
BBS
RRC
GRC
RV3*
NHS
HRL
LN
Hand
Chuk
MecHnd/Chuk
ShkAbs
FJ
FK
SpdContr
Ending

Product-specific cautions: Air bearing actuator LBC Series

Design/selection

CAUTION

■ Use clean, dry compressed air (JIS B 8392-1: 2003 Grade 1.4.2 or equivalent).

- To supply clean compressed air, install an air filter and oil mist filter. Use of the CKD Super Dryer combination SU Series is recommended. (Refer to page 1003 for compatible circuits)
- The drainage that occurs due to a drop in temperature within the pneumatic piping or pneumatic components can momentarily block the air flow path and cause operational failure. This can also further cause rust, resulting in pneumatic components failure.
- Any solid foreign matter in the compressed air can enter the pneumatic components and cause clogging, wear or locking in the bearing.

■ Always supply air with the specified pressure (0.3 to 0.5 MPa) to the bearing port when the actuator is in operation.

- If air is not supplied with the specified pressure, the resulting low load capacity of the bearing can cause the shaft to make contact, resulting in operational failure.
- Use a pressure switch and install a protection circuit that stops operation when pressure drops.

■ Connect a regulator with pressure relief mechanism to the thrust port. When using an electro pneumatic regulator, ensure that it is LBC compatible. (Refer to page 1003 for compatible circuits.)

■ The air bearing mounting surface should have a flatness of 0.01 mm or below.

- Mounting on a low precision surface can cause the bearing to warp, resulting in operational failure.

■ Do not connect the end of the rod to an arm, etc.

- To prevent excessive lateral load from being applied to the bearing, make sure that the rod end is making straight contact with the loading object and that the contact point is a smoothly operating point-contact with low friction.

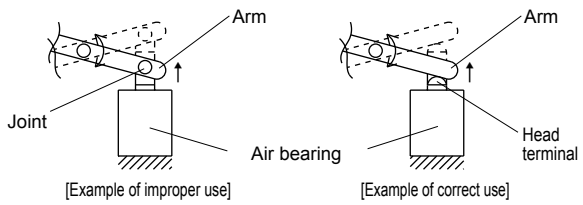

■ Do not use in applications where the rod is rotated using a motor, etc.

- The rod and bearing will make contact, leading to operational failure.

Mounting, installation and adjustment

CAUTION

■ Regarding installing, setting up, and/or adjusting the actuator, read through the instruction manual and operate correctly.

■ Wipe the mounting surface with ethanol and remove any foreign matter by flushing with air blow.

■ Supply compressed air to the bearing when installing a jig on the end of the rod.
If compressed air cannot be supplied, keep the rod free from lateral load or vibration. This also applies when building the product into the equipment.
When attaching a tool to the rod, hold the rod so that no torsional torque or lateral load is applied to the rod or bearing and tighten the screws.

■ The rod is made of an aluminum alloy, which can be easily scratched. Do not touch the outside surface of the rod.
Install the product while the width across flats of the rod end is fixed.

Use/maintenance

CAUTION

■ If the product is not going to be in use over a long period of time, store it in a dry, clean environment.

CAC4

Clamp cylinder

ø40/ø50/ø63/ø80

Special

Overview

Clevis mounting with rod clevis.
Cylinder dedicated for clamp.

Features

The cover shape has been optimized for a lighter and slimmer product.
The protrusion of the needle has been minimized to achieve both easy adjustability and safety.
Anti-spatter adherence CAC4-G4 can also be selected.

- Selectable switch mounting
  In addition to the conventional tie rod style, the band style that is capable of free rotation of switch (circumference direction)/free adjustment of movement has been added.
- Switch mounting position is clear at a glance
  Thanks to the marking on the switch rail for mounting it at the max. sensitivity position, the time for position setting of switch during maintenance can be reduced significantly.
  (Limited to detection of stroke end. Excluding 2-color LED and strong magnetic field proof)

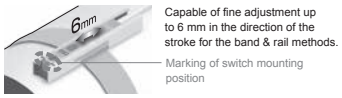

- Capable of free rotation of switch
  Only by loosening the fixing screw, the switch rail can be rotated freely to the circumference direction without changing the position of the band fixing section.
  Adjustment of switch position on site is made easier.
- Fixing screw fallout prevention
  The rubber for preventing slip is attached inside the band.
  The screws will not fall out even if loosened.

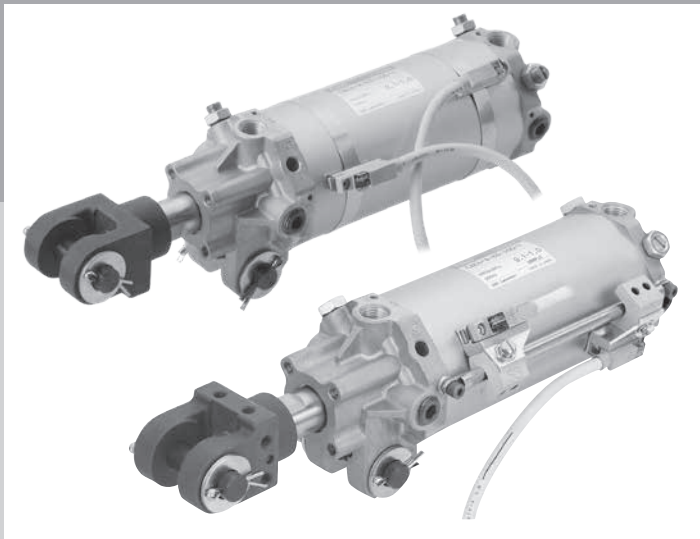

CONTENTS

Series variation	1006
Variation and option combination selection table	1007
● Double acting/single rod (CAC4)	1008
● Double acting/anti-spatter adherence (CAC4-G4)	1020
CAC4 accessory dimensions	1018
⚠ Safety precautions	1028

The cylinder switches T2YH, T2YV, T3YH, and T3YV are scheduled for end of production at the end of December 2023.

Clamp cylinder CAC4 Series

●: Standard, ◎: Option, ▒: Not available

Variation	Model No. JIS symbol	Bore size (mm)	Standard stroke (mm)					Max. stroke (mm)	Option			Accessory					Page
									Bellows (100°C)	Limit switch mounting base with dog	Limit switch mounting base without dog	Clamp bracket	Rod clevis Cast iron	Rod clevis Steel	Rod eye Steel	Switch	
			50	75	100	125	150		K	D	D1	Q	Y	Y1	I		
Double acting/single rod	CAC4 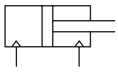	ø40/ø50/ø63	●	●	●	●	●	150	◎	◎	◎	◎	◎	◎	◎	◎	1008
		ø80	●	●	●	●	●	150						◎		◎	
Double acting/ anti-spatter adherence	CAC4-G4 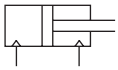	ø40/ø50/ø63	●	●	●	●	●	150		◎	◎	◎	◎	◎	◎	◎	1020
		ø80	●	●	●	●	●	150						◎		◎	

Variation and option combination selection table

		Category	Variation						Port thread			Option	
			Double acting basic	Anti-spatter adherence	With cylinder switch	With cylinder switch for strong magnetic field	Clamp bracket *2		NPT	G		Neoprene with bellows *2	
		Code	None	G4	None	L2	Q		N	G		K	
Variation	Double acting basic	Blank		◎	◎	◎	◎		○	○		◎	
	Anti-spatter adherence	G4			◎	◎	◎		○	○		x	
	With cylinder switch	Blank				x	◎		○	○		◎	
	With cylinder switch for strong magnetic field	L2					◎		○	○		◎	
	Clamp bracket *2	Q							○	○		◎	
Port thread	NPT	N								x		○	
	G	G										○	
Option	Neoprene with bellows *2	K											
Accessory	Cylinder switch	Listed separately	◎	◎	◎	◎	◎		○	○		◎	
	No bracket	Blank	◎	◎	◎	◎	x		○	○		◎	
	Rod eye Steel *2	I	◎	◎	◎	◎	x		○	○		◎	
	Rod clevis Cast iron *2	Y	◎	◎	◎	◎	◎		○	○		◎	
	Rod clevis steel	Y1	◎	◎	◎	◎	◎		○	○		◎	
	Limit switch mounting base with dog *2	D	◎	x	x	x	x		○	○		x	
	without dog *2	D1	◎	x	x	x	x		○	○		x	

◎ : Option
○ : Available (made-to-order product)
△ : Available depending on conditions (Contact CKD.)
x : Not available

*1 : The combinations below are available made to order. (Not available as options.)
Limit switch mounting base + Foot bracket, Bellows + Foot bracket, Bellows + Limit switch mounting base, Limit switch mounting base + Clamp bracket
*2 : Excluding ø80

[Example of model No.]

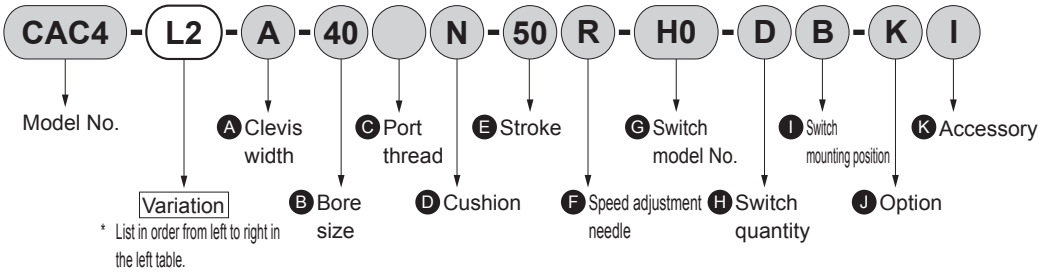

Model No.: Clamp cylinder

● Variation	: With strong magnetic field proof switch
Ⓐ Clevis width	: 16.5 mm
Ⓑ Bore size	: ø40 mm
Ⓒ Port thread	: Rc thread
Ⓓ Cushion	: Without cushion
Ⓔ Stroke	: 50 mm
Ⓕ Speed adjustment needle	: With rod side
Ⓖ Switch model No.	: Reed HO switch, lead wire 1 m
Ⓗ Switch quantity	: 2
Ⓘ Switch mounting position	: B
Ⓙ Option	: Bellows (neoprene) 100 °C
Ⓚ Accessory	: Rod eye Steel

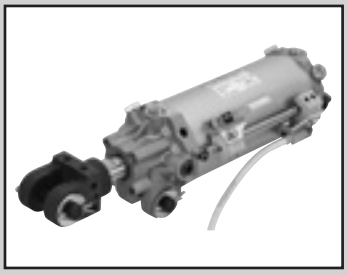

Clamp cylinder/double acting/single rod

CAC4 Series

● Bore size: ø40/ø50/ø63/ø80

JIS symbol

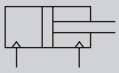

RoHS CAD

Specifications

Item	CAC4			
Bore size mm	ø40	ø50	ø63	ø80
Operation	Double acting			
Working fluid	Compressed air			
Max. working pressure MPa	1.0 (≈150 psi, 10 bar)			
Min. working pressure MPa	0.1 (≈15 psi, 1 bar)			
Proof pressure MPa	1.6 (≈230 psi, 16 bar)			
Ambient temperature °C	-10 (14°F) to 60 (140°F) (no freezing)			
Port size	Rc1/4			Rc3/8
Standard stroke mm	50, 75, 100, 125, 150			
Working piston speed mm/s	50 to 500	50 to 400	50 to 300	
Cushion	Head side air cushioned			
Effective air cushion length mm	13.5			15.4
Lubrication	Not required (use turbine oil ISO VG32 if necessary for lubrication)			
Mounting	Clevis bracket			

* Operate within the absorbed energy. Refer to table below.

Stroke

Bore size (mm)	Standard stroke (mm)	Max. stroke (mm)	Min. stroke (mm)	Min. stroke with switch (mm)
ø40	50, 75 100, 125 150	150	50	50
ø50				
ø63				
ø80				

Note: Products other than standard stroke are made-to-order products.

Cushion characteristics table

Bore size (mm)	Effective cushion length (mm)	Allowable energy (J)	
		With cushion	Without cushion
ø40	13.5	5.14	0.137
ø50	13.5	6.41	0.137
ø63	13.5	11.37	0.205
ø80	15.4	25.4	0.360

● Cushion

The purpose of the cushion is to absorb the piston's kinetic energy with air compressibility, preventing the piston and cover from colliding at the stroke end. Therefore, the cushion itself does not reduce the piston speed at the stroke end.
Note that the left table shows the kinetic energy which can be absorbed by the cushion. If the kinetic energy exceeds these values, or if bouncing caused by the air compressibility is to be avoided, consider using another shock absorber.

$$\text{Kinetic energy (J)} = \frac{1}{2} \times \text{load weight (kg)} \times [\text{speed (m/s)}]^2$$

Cylinder weight

(Unit: kg)

Bore size (mm)	Product weight per 0 mm stroke	Additional weight per 100 mm stroke	Accessory weight					Switch Weight	Mounting bracket weight			Weight of tie rod at 0 mm stroke	Additional weight of tie rod per S = 10 mm
			Axial foot	Rod clevis	Rod eye	Limit switch mounting base	Dog bracket		T type		H type		
									Tie rod mount	Band mount			
ø40	0.75	0.34	0.21	0.37	0.27	0.18	0.08	Refer to the weight in the switch specifications.	0.021	0.007	0.024	0.019	0.003
ø50	0.82	0.36								0.008			
ø63	1.03	0.39								0.009			
ø80	2.80	0.60	-	0.95	-	-	-			0.010		0.030	

(Example) Product weight of CAC4-A-40-150-Y

- ● Product weight for stroke 0 mm ..... 0.75 kg
- ● Additional weight for stroke 150 mm ..... $0.34 \times \frac{150}{100}$ = 0.51 kg
- ● Accessory weight (rod clevis) ..... 0.37 kg
- ● Product weight .....0.75 + 0.51 + 0.37 = 1.63 kg

LCM
LCR
LCG
LCW
LCX
STM
STG
STS/STL
STR2
UCA2
ULK*
JSK/M2
JSG
JSC3/JSC4
USSD
UFCD
USC
UB
JSB3
LMB
LML
HCM
HCA
LBC
CAC4
UCAC2
CAC-N
UCAC-N
RCS2
RCC2
PCC
SHC
MCP
GLC
MFC
BBS
RRC
GRC
RV3*
NHS
HRL
LN
Hand
Chuk
MecHnd/Chuk
ShkAbs
FJ
FK
SpdContr
Ending

Switch specifications

● 1-color/2-color LED

Item	Proximity 2-wire	Proximity 2-wire			Proximity 3-wire				Reed 2-wire						
	T1H/T1V	T2H/T2V/ T2JH/T2JV	T2YH/ T2YV	T2WH/ T2WV	T3H/T3V	T3PH/ T3PV	T3YH/ T3YV	T3WH/ T3WV	T0H/T0V		T5H/T5V		T8H/T8V		
Applications	For programmable controller, relay, compact solenoid valve	Dedicated for programmable controller			For programmable controller, relay				For programmable controller, relay		For programmable controller, relay, IC circuit (no indicator lamp), serial connection		For programmable controller, relay		
Output method	-				NPN output	PNP output	NPN output	NPN output	-						
Pwr. supp. V.	-				10 to 28 VDC				-						
Load voltage	85 to 265 VAC	10 to 30 VDC		24 VDC ±10%	30 VDC or less				12/24 VDC	110 VAC	5/12/24 VDC	100/110 VAC	12/24 VDC	110 VAC	220 VAC
Load current	5 to 100 mA	5 to 20 mA (*3)			100 mA or less		50 mA or less		5 to 50 mA	7 to 20 mA	50 mA or less	20 mA or less	5 to 50 mA	7 to 20 mA	7 to 10 mA
Indicator	LED (Lit when ON)	LED (Lit when ON)	Red/green LED (Lit when ON)	Red/green LED (Lit when ON)	LED (Lit when ON)	Yellow LED (Lit when ON)	Red/green LED (Lit when ON)	Red/green LED (Lit when ON)	LED (Lit when ON)		No indicator lamp		LED (Lit when ON)		
Leakage current	≤ 1 mA at 100 VAC, ≤ 2 mA at 200 VAC	1 mA or less			10 μA or less				0 mA						
Weight g	1 m:33 3 m:87 5 m:142	1 m:18 3 m:49 5 m:80	1 m:33 3 m:87 5 m:142	1 m:18 3 m:49 5 m:80	1 m:18 3 m:49 5 m:80		1 m:33 3 m:87 5 m:142	1 m:18 3 m:49 5 m:80	1 m:18 3 m:49 5 m:80				1 m:33 3 m:87 5 m:142		

*1 : Refer to Ending Page 1 for detailed switch specifications and dimensions.
*2 : Switches other than the above models, such as switches with connectors, are also available. Refer to Ending Page 1.
*3 : The max. load current is 20 mA at 25°C. The current is lower than 20 mA if the operating ambient temperature around the switch is higher than 25˚C. (5 to 10 mA at 60°C)

● For AC magnetic field

Item	Proximity 2-wire		Reed 2-wire		
	T2YD, T2YDT (*4)	T2YDU (Made to order)	HO		HOY (2-color LED)
Applications	Dedicated for programmable controller		For programmable controller, relay		Dedicated for programmable controller
Indicator	Red/green LED (Lit when ON)		Green LED (Lit when ON)		Red/green LED (Lit when ON)
Load voltage	24 VDC ±10%		12/24 VDC	110 VAC	24 VDC
Load current	5 to 20 mA		5 to 50 mA	7 to 20 mA	5 to 20 mA (*1)
Internal voltage drop	6V or less		5V or less		6V or less
Leakage current	1.0 mA or less		10 μA or less		10 μA or less
Output delay time *1 (ON Delay, OFF delay)	60 ms or less		-		
Lead wire length	1 m (oil resistant vinyl cabtyre cable ø 6, 0.5 mm^2 x 2-conductor) *2, *3	0.3 m (flame-resistant cabtyre cable with cable connector, 0.5 mm^2, 2-conductor)	1 m (flame-resistant cabtyre cable 2-conductor 0.5 mm^2)		
Insulation resistance	100 MΩ and over with 500 VDC megger		100 MΩ and over with 500 VDC megger		
Withstand voltage	No failure after 1 minute of 1,000 VAC application.		No failure after 1 minute of 1,000 VAC application.		
Shock resistance	980 m/s^2		294 m/s^2		
Ambient temperature	-10 to +60°C		-10 to +60°C		
Degree of protection	JIS C0920 (water-tight), IEC standards IP67, oil resistance		IEC Standard IP67, JIS C9020 (water-tight), oil resistance		
Weight g	1 m:61 3 m:166 5 m:272	35	1 m:76 3 m:181 5 m:289		

*1 : Indicates the time from magnetic sensor detection of the piston magnet until switch output.
*2 : 3 m and 5 m lead wires are available as options.
*3 : Flame-resistant lead wires are available as options.
*4 : Switch for AC magnetic field (T2YD, T2YDT) cannot be used in DC magnetic field.
*5 : The above max. load current is 20 mA at 25°C. The current is lower than 20 mA if the operating ambient temperature around the switch is higher than 25˚C. (5 to 10 mA at 60°C)

Theoretical thrust table

(Unit: N)

Bore size (mm)	Operating direction	Working pressure MPa										
		0.1	0.15	0.2	0.3	0.4	0.5	0.6	0.7	0.8	0.9	1.0
ø40	Push	$1.26x10^2$	$1.88x10^2$	$2.51x10^2$	$3.77x10^2$	$5.03x10^2$	$6.28x10^2$	$7.54x10^2$	$8.80x10^2$	$1.01x10^3$	$1.13x10^3$	$1.26x10^3$
	Pull	94.2	$1.41x10^2$	$1.88x10^2$	$2.83x10^2$	$3.77x10^2$	$4.71x10^2$	$5.65x10^2$	$6.60x10^2$	$7.54x10^2$	$8.48x10^2$	$9.42x10^2$
ø50	Push	$1.96x10^2$	$2.95x10^2$	$3.93x10^2$	$5.89x10^2$	$7.85x10^2$	$9.82x10^2$	$1.18x10^3$	$1.37x10^3$	$1.57x10^3$	$1.77x10^3$	$1.96x10^3$
	Pull	$1.65x10^2$	$2.47x10^2$	$3.30x10^2$	$4.95x10^2$	$6.60x10^2$	$8.25x10^2$	$9.90x10^2$	$1.15x10^3$	$1.32x10^3$	$1.48x10^3$	$1.65x10^3$
ø63	Push	$3.12x10^2$	$4.68x10^2$	$6.23x10^2$	$9.35x10^2$	$1.25x10^3$	$1.56x10^3$	$1.87x10^3$	$2.18x10^3$	$2.49x10^3$	$2.81x10^3$	$3.12x10^3$
	Pull	$2.80x10^2$	$4.20x10^2$	$5.61x10^2$	$8.41x10^2$	$1.12x10^3$	$1.40x10^3$	$1.68x10^3$	$1.96x10^3$	$2.24x10^3$	$2.52x10^3$	$2.80x10^3$
ø80	Push	$5.03x10^2$	$7.54x10^2$	$1.01x10^3$	$1.51x10^3$	$2.01x10^3$	$2.51x10^3$	$3.02x10^3$	$3.52x10^3$	$4.02x10^3$	$4.52x10^3$	$5.03x10^3$
	Pull	$4.54x10^2$	$6.80x10^2$	$9.07x10^2$	$1.36x10^3$	$1.81x10^3$	$2.27x10^3$	$2.72x10^3$	$3.17x10^3$	$3.63x10^3$	$4.08x10^3$	$4.54x10^3$

LCM
LCR
LCG
LCW
LCX
STM
STG
STS/STL
STR2
UCA2
ULK*
JSK/M2
JSG
JSC3/JSC4
USSD
UFCD
USC
UB
JSB3
LMB
LML
HCM
HCA
LBC
CAC4
UCAC2
CAC-N
UCAC-N
RCS2
RCC2
PCC
SHC
MCP
GLC
MFC
BBS
RRC
GRC
RV3*
NHS
HRL
LN
Hand
Chuk
MecHnd/Chuk
ShkAbs
FJ
FK
SpdContr
Ending

How to order

Without switch (built-in magnet for switch)

CAC4 - A - 40 ( ) B - 50 R ——— Y1

With switch (built-in magnet for switch)

CAC4 - A - 40 ( ) B - 50 R - T0H - R B - Y1

With strong magnetic field proof (for H0, H0Y switches) switch (built-in magnet for switch)

CAC4-L2 - A - 40 ( ) B - 50 R — H0 - R B - Y1

- A Clevis width *1
- B Bore size
- C Port thread
- D Cushion
- E Stroke
- F Speed adjustment needle
- G Switch model No. *3
- H Switch quantity
- I Switch mounting position and mounting *5
- J Accessory *6 *7 *8

* indicates the lead wire length.

Code	Description

A Clevis width (mm)

	Bore size (ø)	ø40	ø50	ø63	ø80
Blank	28				●
A	16.5	●	●	●	
B	19.5	●	●	●	
AL	16.5 (Axial foot)	●	●	●	
BL	19.5 (Axial foot)	●	●	●	

B Bore size (mm)

40	ø40
50	ø50
63	ø63
80	ø80

C Port thread

Blank	Rc thread
N	NPT thread (made-to-order product)
G	G thread (made-to-order product)

D Cushion

Blank / H *2	Head side cushioned
B	Both sides cushioned
N	Without cushion

E Stroke (mm)

50, 75, 100, 125, 150

F Speed adjustment needle

Blank	With both sides
R	With rod side
H	With head side
N	None

G Switch model No.

Straight lead wire	L-shaped lead wire	Contact	Voltage AC	Voltage DC	Indicator	Lead wire
T0H*	T0V*	Reed	●	●	1-color LED	2-wire
T5H*	T5V*	Reed	●	●	No indicator lamp	2-wire
T8H*	T8V*	Reed	●	●	1-color LED	2-wire
T1H*	T1V*	Proximity	●		1-color LED	2-wire
T2H*	T2V*	Proximity		●	1-color LED	2-wire
T3H*	T3V*	Proximity		●	1-color LED	3-wire
T3PH*	T3PV*	Proximity		●	1-color LED	3-wire
T2YH*	T2YV*	Proximity		●	2-color LED	2-wire
T2WH*	T2WV*	Proximity		●	2-color LED	2-wire
T3YH*	T3YV*	Proximity		●	2-color LED	3-wire
T3WH*	T3WV*	Proximity		●	2-color LED	3-wire
T2YD*	-	Proximity		●	For 2-color LED AC magnetic field	2-wire
T2YDT*	-	Proximity		●	For 2-color LED AC magnetic field	2-wire
T2YDU	-	Proximity		●	Switch, strong magn field connector (for AC magn field, made-to-order)	2-wire
T2YDU	-	Proximity		●	Switch, strong magn field connector (for AC magn field, made-to-order)	2-wire
T2JH*	T2JV*	Proximity		●	1-color LED off-delay	2-wire
H0*	-	Reed	●	●	Strong magnetic field proof switch	2-wire
H0Y*	-	Reed		●	Strong magnetic field, 2-color LED	2-wire

* Lead wire length

Blank	1 m (standard)
3	3 m (option)
5	5 m (option)

H Switch quantity

R	1 on rod side
H	1 on head side
D	2

I Switch mounting position and mounting

Blank	Tie rod mounting	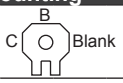
B	Tie rod mounting	
C	Tie rod mounting	
Z *4	Band mounting	

* Selectable only when the switch model No. is not specified Tie rod mounting position

Blank	Without tie rod
A	
B	
C	

J Accessory

	Bore size	ø40	ø50	ø63	ø80
Blank	Without accessory (rod eye)	●	●	●	●
Y	Rod clevis Cast iron	●	●	●	
Y1	Rod clevis Steel	●	●	●	●
I	Rod eye Steel	●	●	●	
K	Bellows *9, *10, *11	●	●	●	
D	With dog Limit switch	●	●	●	
D1	Without dog mounting base	●	●	●	
Q	Clamp bracket	●	●	●	

Precautions for model No. selection

*1 : A clevis pin, split pin, and plain washer are attached with A, B, AL and BL.
The clevis width and rod clevis width are the same.
*2 : If blank is selected for C Port thread, the head side cushion comes with "Blank" for D Cushion and "H" for all other options.
*3 : T2YD, T2YDT, T2YDU, HO and HOY are strong magnetic field proof switches.
4 : Cannot be selected with G Switch model No. "H0", "H0Y*".
*5 : For the mounting band, a switch body + mounting bracket set + band are shipped with the product.
*6 : A pin, split pin, and plain washer are attached with Y and Y1.
*7 : For Q, piston rod protruding length is different from the standard. This cannot be mounted on the standard.
*8 : When selecting "Q", only "A" can be selected for A Clevis width.
*9 : Bellows max. ambient temperature 100°C, instantaneous max. temperature 200°C
*10: Cannot be mounted if A Clevis width is AL or BL.
*11: For the type with bellows, be sure to select a rod eye.

[Example of model No.]

CAC4-A-40B-50R-T0H-RB-Y1

Model: Clamp cylinder

A Clevis width	: 16.5 mm
B Bore size	: ø40 mm
C Port thread	: Rc thread
D Cushion	: With both sides
E Stroke	: 50 mm
F Speed adjustment needle	: With rod side
G Switch model No.	: Reed switch T0H, Lead wire length 1 m
H Switch quantity	: 1 on rod side
I Switch mounting position and mounting	: B
J Accessory	: Rod clevis (SS400)

LCM
LCR
LCG
LCW
LCX
STM
STG
STS/STL
STR2
UCA2
ULK*
JSK/M2
JSG
JSC3/JSC4
USSD
UFCD
USC
UB
JSB3
LMB
LML
HCM
HCA
LBC
CAC4
UCAC2
CAC-N
UCAC-N
RCS2
RCC2
PCC
SHC
MCP
GLC
MFC
BBS
RRC
GRC
RV3*
NHS
HRL
LN
Hand
Chuk
MecHnd/Chuk
ShkAbs
FJ
FK
SpdContr
Ending

How to order switch

* Pay attention to the direction when mounting the tie rod. Refer to page 1014.

[Switch mounting: Tie rod type]

● T-switch

A) Switch body + mounting bracket set (=B+C+D)

CAC4 - T0H - 40 - 50

- T0H: Switch model No. (Item Ⓖ on page 1010)
- 40: Bore size (Item Ⓑ on page 1010)
- 50: Stroke (Item Ⓔ on page 1010)

B) Switch body only

SW - T0H

- T0H: Switch model No. (Item Ⓖ on page 1010)

C) Mounting bracket kit

CAC4 - T - 40

- 40: Bore size (Item Ⓑ on page 1010)

D) Mounting tie rod kit

CAC4 - 40 - TIE - ROD - KIT - 50

- 40: Bore size (Item Ⓑ on page 1010)
- 50: Stroke (Item Ⓔ on page 1010)

● H-switch

A) Switch body + mounting bracket set (=B+C+D)

CAC4-L2 - H0 - 40 - 50

- H0: Switch model No. (Item Ⓖ on page 1010)
- 40: Bore size (Item Ⓑ on page 1010)
- 50: Stroke (Item Ⓔ on page 1010)

B) Switch body only

SW - H0

- H0: Switch model No. (Item Ⓖ on page 1010)

C) Mounting bracket kit

CAC4-L2 - H - 40

- 40: Bore size (Item Ⓑ on page 1010)

D) Mounting tie rod kit

CAC4 - 40 - TIE - ROD - KIT - 50

- 40: Bore size (Item Ⓑ on page 1010)
- 50: Stroke (Item Ⓔ on page 1010)

[Switch mounting: Band]

A) Switch body + mounting bracket set + band (=B+C)

CAC4 - T0H - 40 - Z

- T0H: Switch model No. (Item Ⓖ on page 1010)
- 40: Bore size (Item Ⓑ on page 1010)

B) Switch body only

SW - T0H

- T0H: Switch model No. (Item Ⓖ on page 1010)

C) Mounting bracket set + band

CAC4 - Z - 40

- 40: Bore size (Item Ⓑ on page 1010)

LCM
LCR
LCG
LCW
LCX
STM
STG
STS/STL
STR2
UCA2
ULK*
JSK/M2
JSG
JSC3/JSC4
USSD
UFCD
USC
UB
JSB3
LMB
LML
HCM
HCA
LBC
CAC4
UCAC2
CAC-N
UCAC-N
RCS2
RCC2
PCC
SHC
MCP
GLC
MFC
BBS
RRC
GRC
RV3*
NHS
HRL
LN
Hand
Chuk
MecHnd/Chuk
ShkAbs
FJ
FK
SpdContr
Ending

Internal structure and parts list (ø40 to ø63)

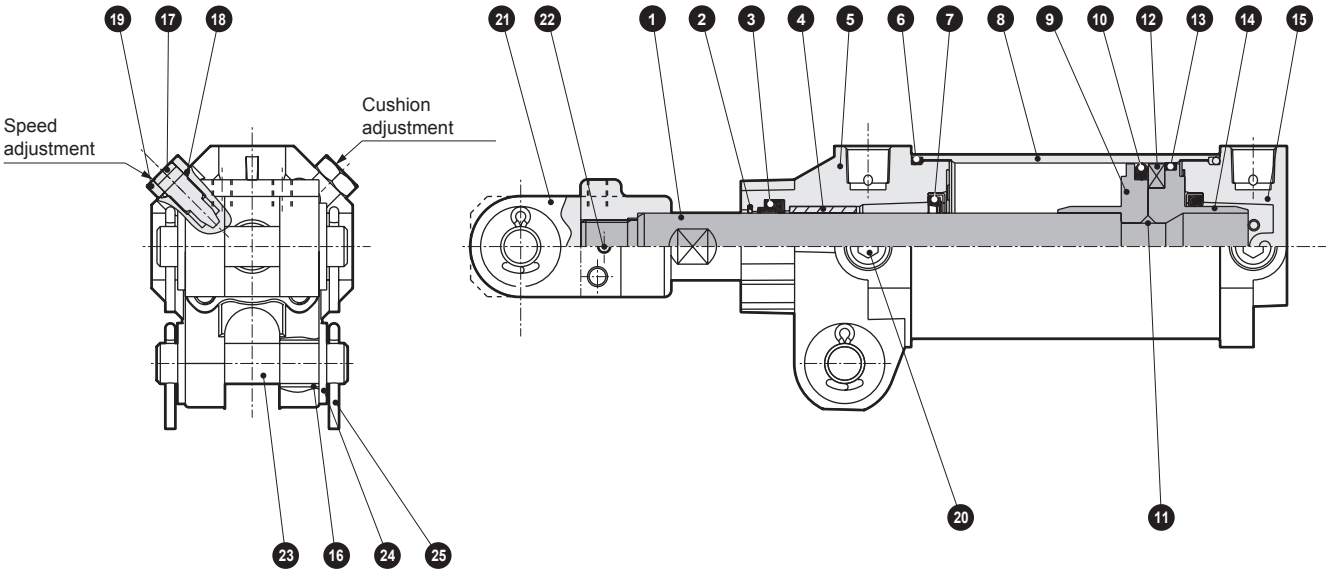

Note)❼cushion packing is attached to the rod side only when both sides are cushioned.

No.	Part name	Material	Remarks	No.	Part name	Material	Remarks
1	Piston rod	Steel	Industrial chrome plating	14	Piston (H)	Aluminum alloy die-casting	ø40: Aluminum alloy
2	Metal scraper	Copper alloy		15	Head cover	Aluminum alloy die-casting	Chromate
3	Rod packing	Nitrile rubber		16	Bush for clevis	Steel, copper	
4	Bush	Copper alloy		17	Needle	Copper alloy	
5	Rod cover	Aluminum alloy die-casting	Chromate	18	Needle gasket	Nitrile rubber	
6	Cylinder gasket	Nitrile rubber		19	Hexagon nut	Steel	Chromate
7	Cushion packing	Nitrile rubber, steel	Chromate	20	Hexagon socket plug	Steel	Black finish
8	Cylinder tube	Aluminum alloy	Hard alumite	21	Rod clevis	Y: Cast iron Y1: Steel	Y: Manganese phosphate Y1: Black finish
9	Piston (R)	Aluminum alloy die-casting	ø40: Aluminum alloy	22	Spring pin	Steel	Black finish
10	Piston packing	Nitrile rubber		23	Clevis pin	Steel	Black finish
11	Piston gasket	Nitrile rubber		24	Flat washer	Steel	Chromate
12	Magnet	Plastic		25	Split pin	Steel	Chromate
13	Wear ring	Polyacetal resin					

Consumable parts list

Bore size (mm)	Kit No.	Consumable parts No.
ø40	**CAC4-40K**	❷ ❸ ❻ ❼ ❿ ⓭ ⓲
ø50	**CAC4-50K**	
ø63	**CAC4-63K**	

Both sides cushioned

Bore size (mm)	Kit No.	Consumable parts No.
ø40	**CAC4-40BK**	❷ ❸ ❻ ❼ ❿ ⓭ ⓲
ø50	**CAC4-50BK**	
ø63	**CAC4-63BK**	

Internal structure and parts list (ø80)

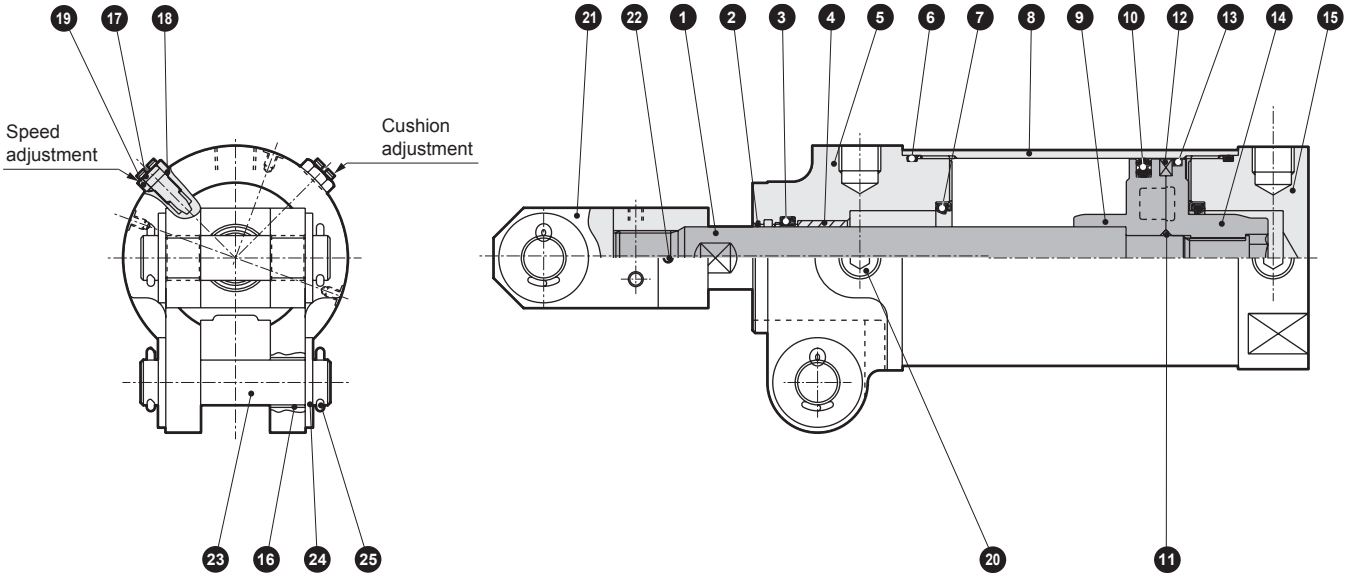

Note) Cushion packing ❼ is attached to the rod side only when both sides are cushioned.

Parts list

No.	Part name	Material	Remarks	No.	Part name	Material	Remarks
1	Piston rod	Steel	Industrial chrome plating	14	Piston (H)	Aluminum alloy die-casting	
2	Metal scraper	Copper alloy		15	Head cover	Aluminum alloy	Chromate
3	Rod packing	Nitrile rubber		16	Bush for clevis	Steel, copper	
4	Bush	Copper alloy		17	Needle	Steel	Chromate
5	Rod cover	Aluminum alloy	Chromate	18	Needle gasket	Nitrile rubber	
6	Cylinder gasket	Nitrile rubber		19	Hexagon nut	Steel	Chromate
7	Cushion packing	Nitrile rubber, steel	Chromate	20	Hexagon socket plug	Steel	Black finish
8	Cylinder tube	Aluminum alloy	Hard alumite	21	Rod clevis	Steel	Black finish
9	Piston (R)	Aluminum alloy die-casting		22	Spring pin	Steel	Black finish
10	Piston packing	Nitrile rubber		23	Clevis pin	Steel	Black finish
11	Piston gasket	Nitrile rubber		24	Plain washer	Steel	Chromate
12	Magnet	Plastic		25	Split pin	Steel	Chromate
13	Wear ring	Polyacetal resin					

Repair parts list

Part name / Kit No.	Repair parts No.
CAC4-80K	❷ ❸ ❻ ❼ ❿ ⓭ ⓲

Both sides cushioned

Part name / Kit No.	Repair parts No.
CAC4-80BK	❷ ❸ ❻ ❼ ❿ ⓭ ⓲

LCM
LCR
LCG
LCW
LCX
STM
STG
STS/STL
STR2
UCA2
ULK*
JSK/M2
JSG
JSC3/JSC4
USSD
UFCD
USC
UB
JSB3
LMB
LML
HCM
HCA
LBC
CAC4
UCAC2
CAC-N
UCAC-N
RCS2
RCC2
PCC
SHC
MCP
GLC
MFC
BBS
RRC
GRC
RV3*
NHS
HRL
LN
Hand
Chuk
MecHnd/Chuk
ShkAbs
FJ
FK
SpdContr
Ending

Dimensions (ø40/ø50/ø63)

● Without rod eye

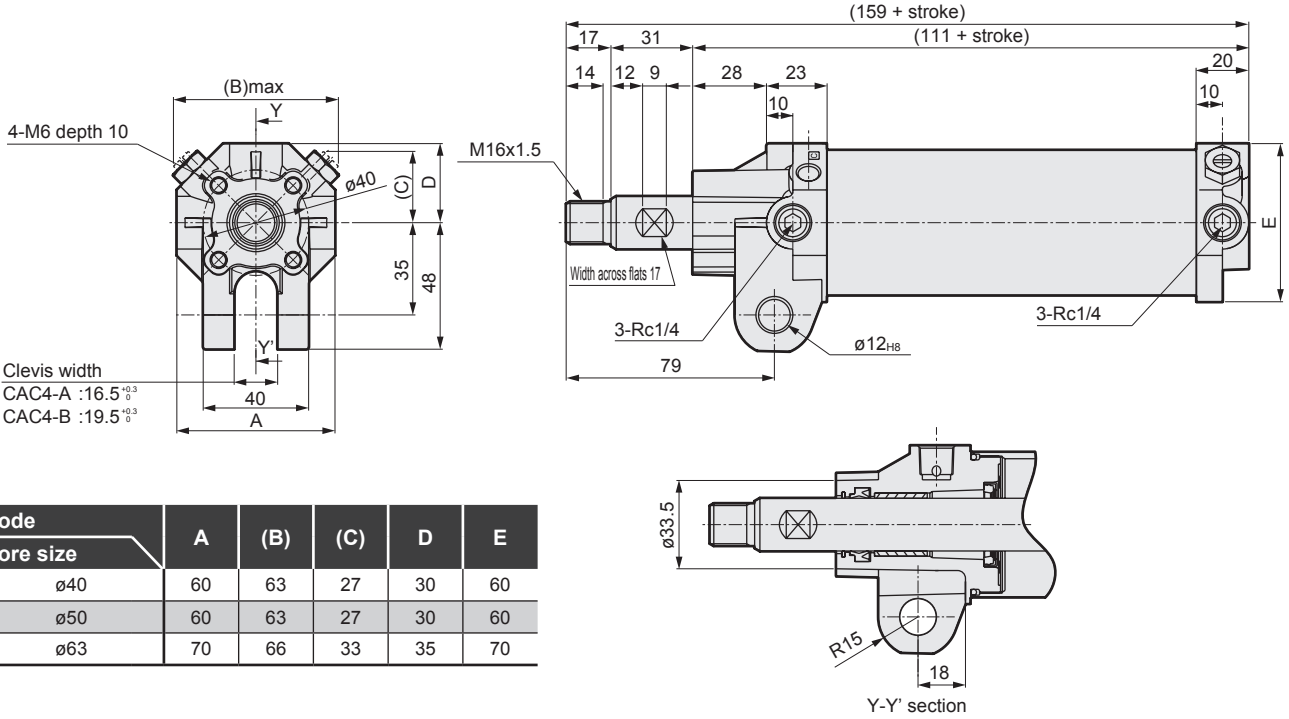

Code / Bore size	A	(B)	(C)	D	E
ø40	60	63	27	30	60
ø50	60	63	27	30	60
ø63	70	66	33	35	70

Dimensions of units with T*H/V and T2YD (Switch mounting: Tie rod)

● CAC4

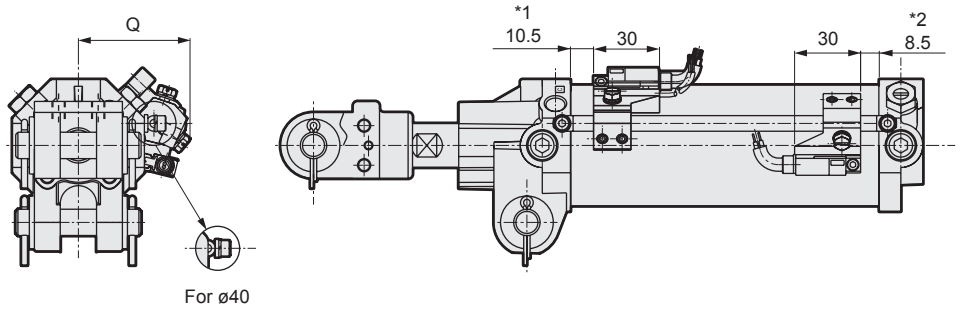

Code / Bore size	Q
ø40	46
ø50	50
ø63	56

*1 : 5.5 for switch T8H/V and 13.5 for switch T2/3W
*2 : 3.5 for switch T8H/V and 11.5 for switch T2/3W
* Pay attention to the direction when mounting the tie rod.

H0Y mounted dimensions

● CAC4-L2

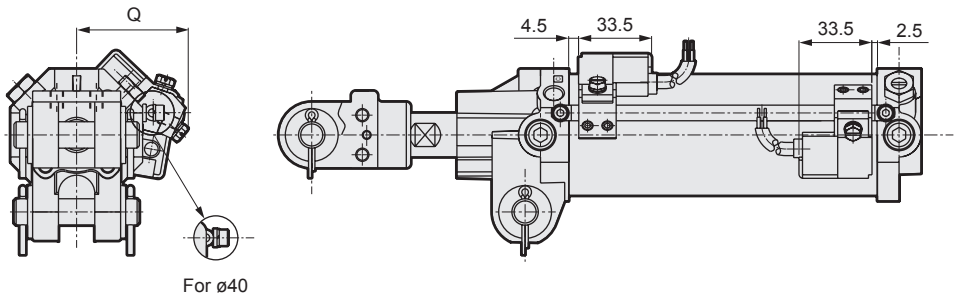

Code / Bore size	Q
ø40	46
ø50	50
ø63	56

Dimensions (ø40/ø50/ø63)

● With rod clevis (Y)

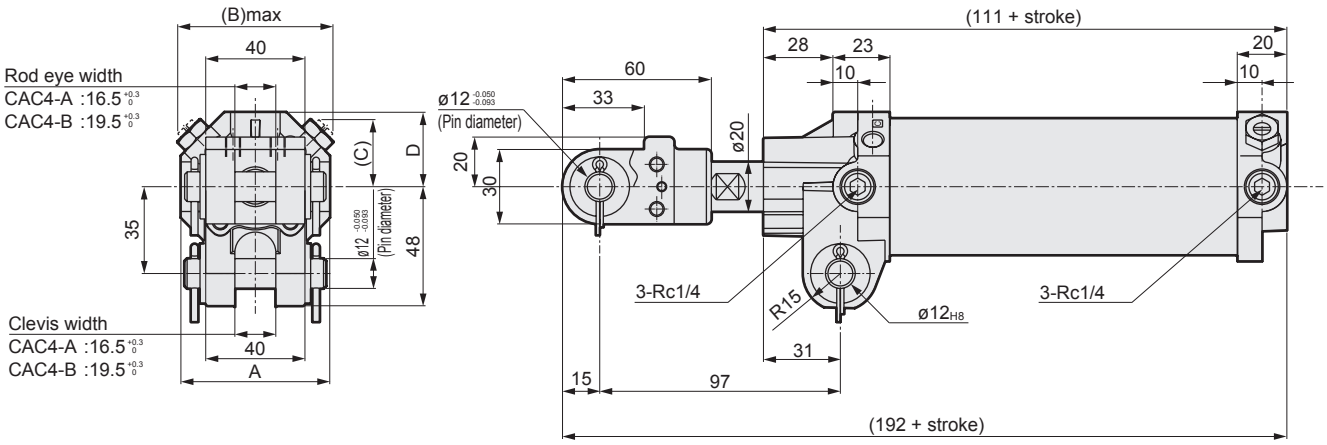

Code / Bore size	A	(B)	(C)	D	E
ø40	60	63	27	30	60
ø50	60	63	27	30	60
ø63	70	66	33	35	70

● Clevis pin, rod eye pin, split pin and plain washer are attached.

● With bellows (K)

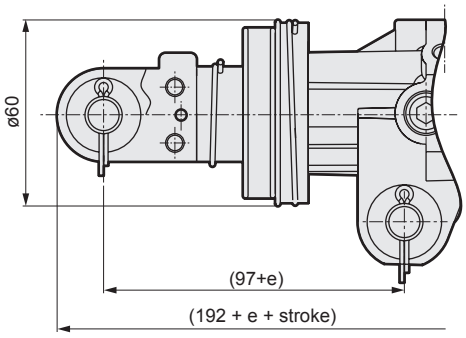

● Dimensions for units with bellows

Stroke	With rod clevis and bellows				
Code	50	51 to 75	76 to 100	101 to 125	126 to 150
e	0	10	18	31	31

● Axial foot
For ø40 to ø63

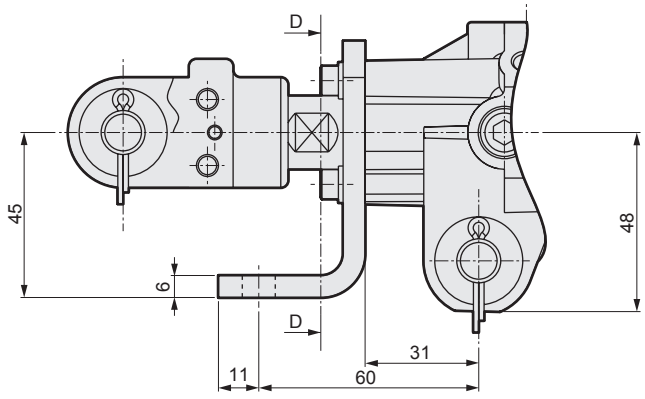

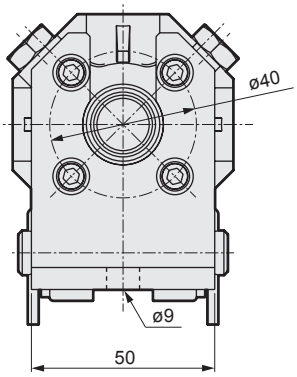

D-D arrow view

LCM
LCR
LCG
LCW
LCX
STM
STG
STS/STL
STR2
UCA2
ULK*
JSK/M2
JSG
JSC3/JSC4
USSD
UFCD
USC
UB
JSB3
LMB
LML
HCM
HCA
LBC
CAC4
UCAC2
CAC-N
UCAC-N
RCS2
RCC2
PCC
SHC
MCP
GLC
MFC
BBS
RRC
GRC
RV3*
NHS
HRL
LN
Hand
Chuk
MecHnd/Chuk
ShkAbs
FJ
FK
SpdContr
Ending

LCM
LCR
LCG
LCW
LCX
STM
STG
STS/STL
STR2
UCA2
ULK*
JSK/M2
JSG
JSC3/JSC4
USSD
UFCD
USC
UB
JSB3
LMB
LML
HCM
HCA
LBC
CAC4
UCAC2
CAC-N
UCAC-N
RCS2
RCC2
PCC
SHC
MCP
GLC
MFC
BBS
RRC
GRC
RV3*
NHS
HRL
LN
Hand
Chuk
MecHnd/Chuk
ShkAbs
FJ
FK
SpdContr
Ending

Dimensions (ø80)

● Without rod eye

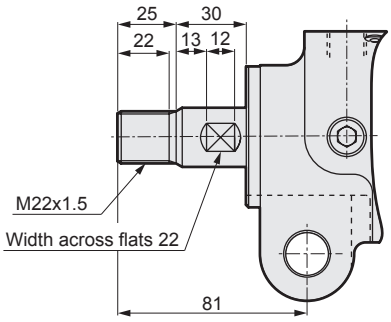

● With rod clevis (Y1), T*H/V (switch mounting: tie rod type)

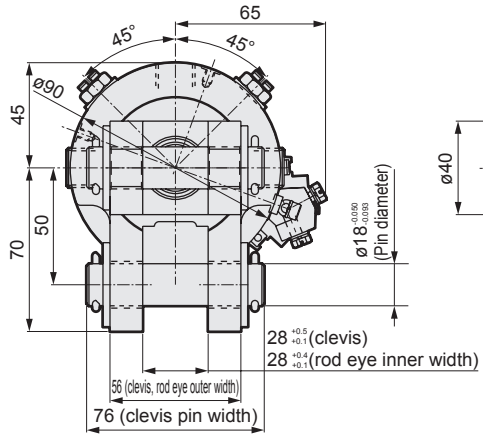

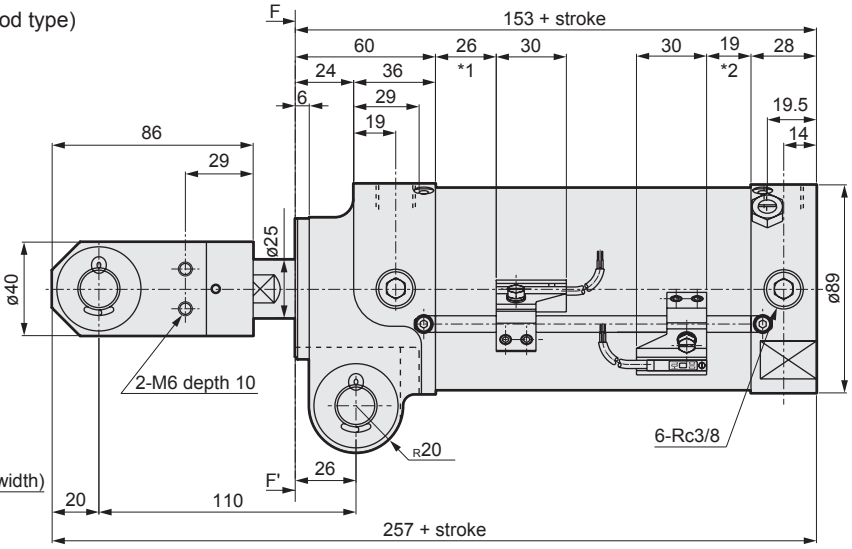

*1: 17.5 for switch T8H/V and 26 for switch T2/3W
*2: 10.5 for switch T8H/V and 19 for switch T2/3W

F arrow view

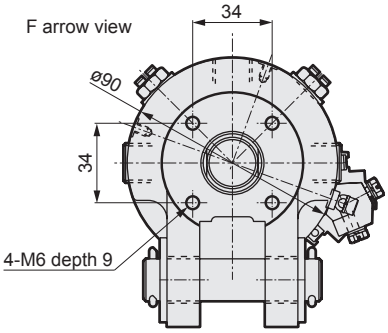

F-F' arrow view

● HOY mounted (CAC4-L2)

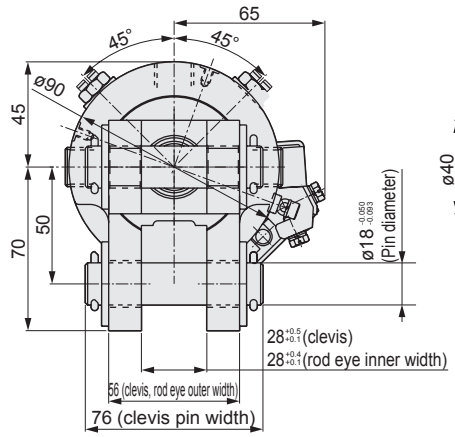

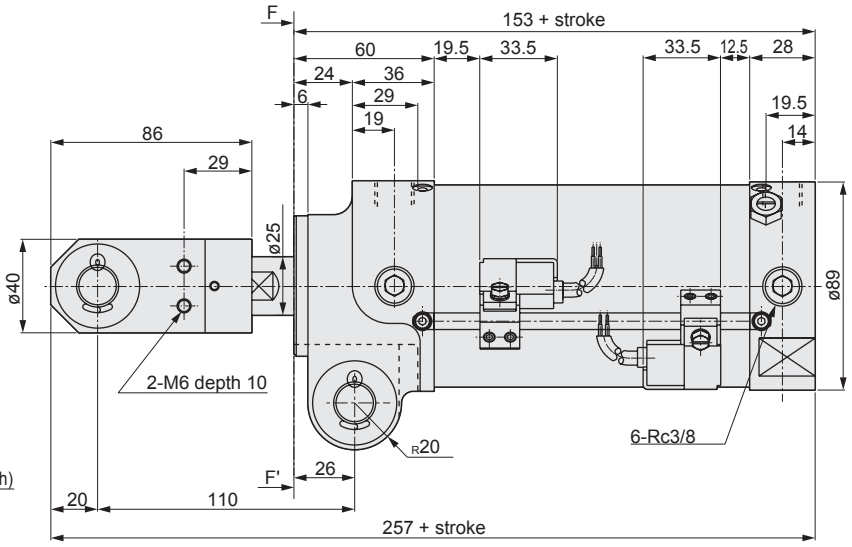

LCM
LCR
LCG
LCW
LCX
STM
STG
STS/STL
STR2
UCA2
ULK*
JSK/M2
JSG
JSC3/JSC4
USSD
UFCD
USC
UB
JSB3
LMB
LML
HCM
HCA
LBC
CAC4
UCAC2
CAC-N
UCAC-N
RCS2
RCC2
PCC
SHC
MCP
GLC
MFC
BBS
RRC
GRC
RV3*
NHS
HRL
LN
Hand
Chuk
MecHnd/Chuk
ShkAbs
FJ
FK
SpdContr
Ending

Dimensions (switch mounting: band)

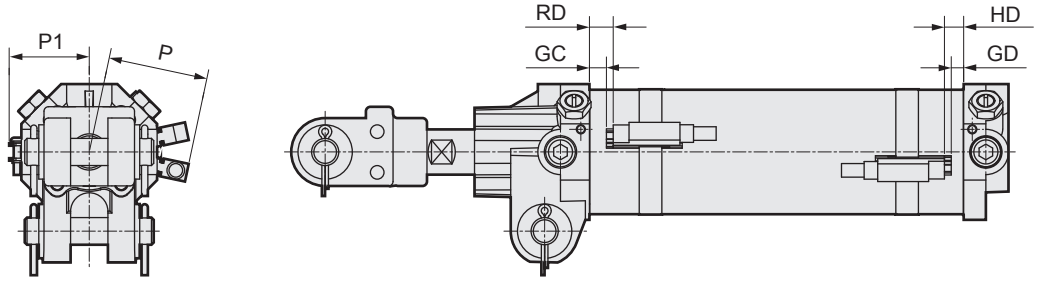

Code / Bore size (mm)	T0,T5,T2,T3						T1,T2YD,T2YDT						T2Y,T3Y,T2J					
	GC	GD	RD	HD	P	P1	GC Note	GD Note	RD	HD	P	P1	GC Note	GD Note	RD	HD	P	P1
ø40	6.5	4.5	10.5	8.5	30	31	-	-	10.5	8.5	41	31	-	-	10.5	8.5	36	31
ø50	6.5	4.5	10.5	8.5	34.5	36	-	-	10.5	8.5	45.5	36	-	-	10.5	8.5	40	36
ø63	6.5	4.5	10.5	8.5	41	42.5	-	-	10.5	8.5	52	42.5	-	-	10.5	8.5	46.5	42.5
ø80	19	12	23	16	50	52	-	-	23	16	61	52	-	-	23	16	56	52

Code / Bore size (mm)	T8						T2W,T3W					
	GC Note	GD Note	RD	HD	P	P1	GC	GD	RD	HD	P	P1
ø40	-	-	5.5	3.5	36	31	9.5	7.5	13.5	11.5	30	31
ø50	-	-	5.5	3.5	40	36	9.5	7.5	13.5	11.5	34.5	36
ø63	-	-	5.5	3.5	46.5	42.5	9.5	7.5	13.5	11.5	41	42.5
ø80	-	-	18	11	56	52	22	15	26	19	50	52

Note: Because the rail and the end face of the switch are on the same surface, the dimensions of GC and GD will be the same as those of RD and HD.

Dimensions: Clamp bracket (ø40 to ø63)

● Clamp bracket

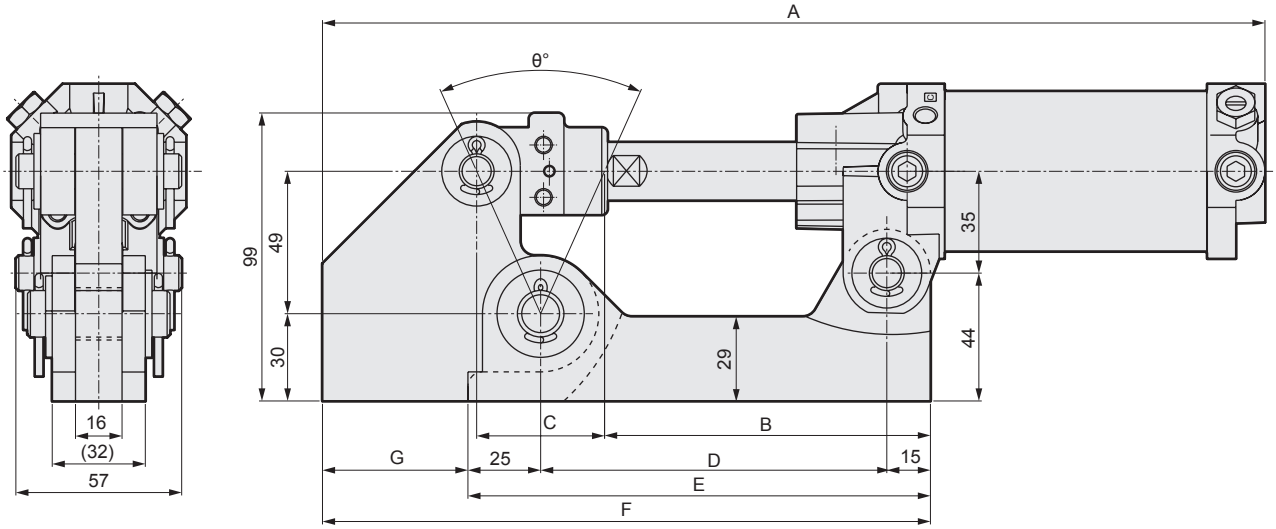

- The projection dimension of rod is different from the standard. This cannot be mounted on the standard.
- The figure is the projection dimensions. Dimension B represents the center position of the rod eye pin when the rod is retracted.
- Dimensions with bellows are the same.
- This product is mounted by welding.
- There is no ø80.
- Figure is dimensions with CAC4-A-50-Q. Configuration varies depending on the stroke.

Code / Model No.	Stroke	A	B	C	D	E	F	G	θ°
CAC4-A-50-Q	50	324	97	44	119	159	209	50	48
CAC4-A-75-Q	75	372	107	70	142	182	232	50	71
CAC4-A-100-Q	100	415	115	90	160	200	250	50	85
CAC4-A-125-Q	125	468	128	120	188	228	278	50	101
CAC4-A-150-Q	150	513	128	140	198	238	298	60	110

LCM
LCR
LCG
LCW
LCX
STM
STG
STS/STL
STR2
UCA2
ULK*
JSK/M2
JSG
JSC3/JSC4
USSD
UFCD
USC
UB
JSB3
LMB
LML
HCM
HCA
LBC
CAC4
UCAC2
CAC-N
UCAC-N
RCS2
RCC2
PCC
SHC
MCP
GLC
MFC
BBS
RRC
GRC
RV3*
NHS
HRL
LN
Hand
Chuk
MecHnd/Chuk
ShkAbs
FJ
FK
SpdContr
Ending

Accessory dimensions

● Rod eye dimensions
For ø40 to ø63

Material: Steel Black finish

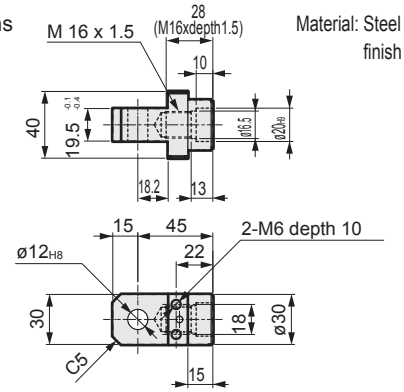

* Spring pin is attached.

Model No.	A	Applicable clamp	Weight (kg)
CAC4-IB	19.5 $^{-0.1}_{-0.4}$	CAC4-A, CAC4-B	0.27

● Rod clevis Steel (Y1) dimensions
For ø40 to ø63

Material: Steel Black finish

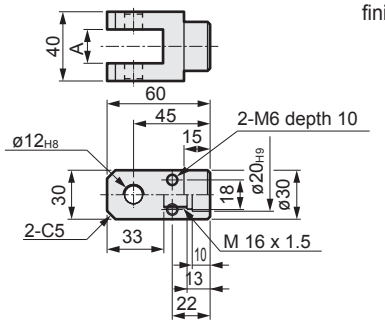

* A pin, split pin, spring pin and a plain washer are attached.

Model No.	A	Applicable clamp	Weight (kg)
CAC4-Y1A	16.5 $^{+0.3}_{0}$	CAC4-A	0.37
CAC4-Y1B	19.5 $^{+0.3}_{0}$	CAC4-B	0.37

● Clevis pin dimensions
For ø40 to ø63

Material:Steel Zinc chromate treatment

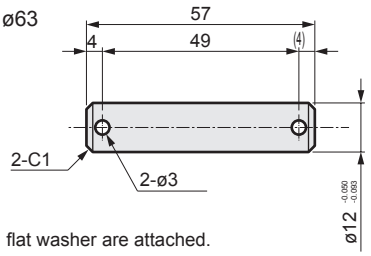

* A split pin and flat washer are attached.

Model No.	Applicable clamp	Weight (kg)
CAC4-P	CAC4-A, CAC4-B	0.05

● Limit switch mounting base dimensions
Material: Steel, black finish

● Dog bracket Dimensions
Material: Steel, black finish

For ø40 to ø63

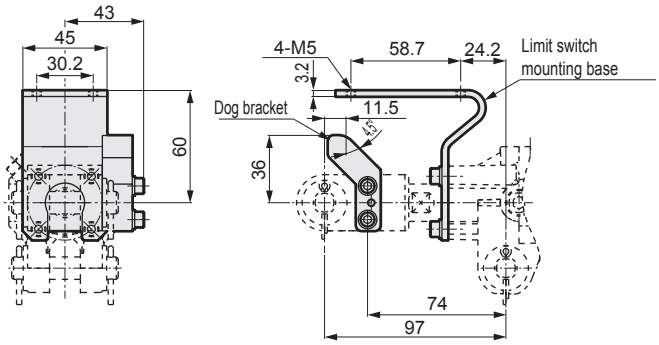

● WLH2 limit switch [OMRON] or equivalent should be used.

Model No.	Part name	Applicable clamp	Weight (kg)
CAC4-L	Limit switch mounting base	CAC4-A, CAC4-B	0.18
CAC4-D	Dog bracket		0.08

● Rod clevis Cast iron (Y) dimensions
For ø40 to ø63

Material: Manganese cast iron phosphate

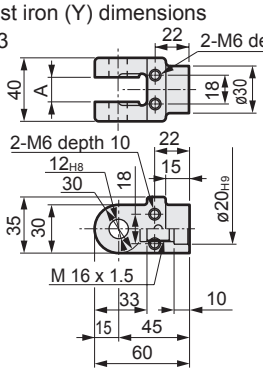

* A pin, split pin, spring pin and a plain washer are attached.

Model No.	A	Applicable clamp	Weight (kg)
CAC4-YA	16.5 $^{+0.3}_{0}$	CAC4-A	0.37
CAC4-YB	19.5 $^{+0.3}_{0}$	CAC4-B	0.37

For ø80

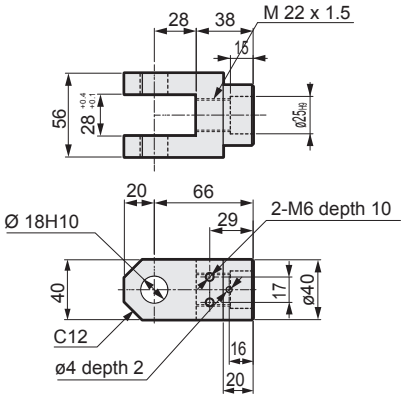

* A pin, split pin, spring pin and a plain washer are attached.

Model No.	Applicable clamp	Weight (kg)
CAC4-Y1-80	CAC4-A, CAC4-B	0.95

For ø80

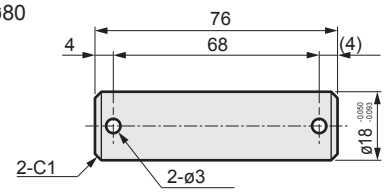

* A split pin and flat washer are attached.

Model No.	Applicable clamp	Weight (kg)
CAC4-P-80	CAC4-A, CAC4-B	0.15

● AL, BL axial foot bracket
For ø40 to ø63

Material: Steel, black finish

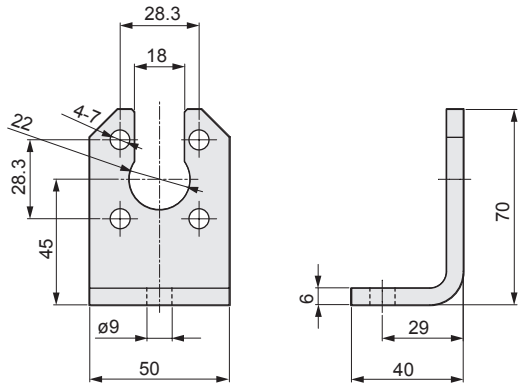

* 4 hexagon socket head cap screws and disc spring washers are attached.

Model No.	Applicable clamp	Weight (kg)
CAC4-F	CAC4-A, CAC4-B	0.21

MEMO

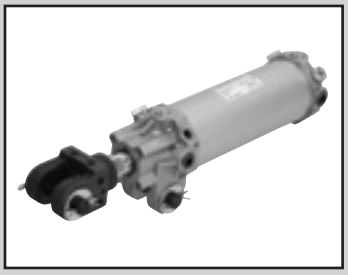

Clamp cylinder/anti-spatter adherence

CAC4-G4 Series

● Bore size: ø40/ø50/ø63/ø80

JIS symbol 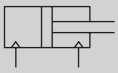

RoHS CAD

Specifications

Item	CAC4-G4/CAC4-G4L2			
Bore size mm	ø40	ø50	ø63	ø80
Actuation	Double acting			
Working fluid	Compressed air			
Max. working pressure MPa	1.0 (≈150 psi, 10 bar)			
Min. working pressure MPa	0.1 (≈15 psi, 1 bar)			
Proof pressure MPa	1.6 (≈230 psi, 16 bar)			
Ambient temperature °C	-10 (14°F) to 60 (140°F) (no freezing)			
Port size	Rc1/4			Rc3/8
Standard stroke mm	50, 75, 100, 125, 150			
Working piston speed mm/s	50 to 500	50 to 400	50 to 300	
Cushion	Head side air cushioned			
Effective air cushion length mm	13.5			15.4
Lubrication	Not required (use turbine oil ISO VG32 if necessary for lubrication)			
Mounting	Clevis bracket			

* Operate within the absorbed energy. Refer to table below.

Stroke

Bore size (mm)	Standard stroke (mm)	Max. stroke (mm)	Min. stroke (mm)	Min. stroke with switch (mm)
ø40	50, 75 100, 125 150	150	50	50
ø50				
ø63				
ø80				

Note: Products other than standard stroke are made-to-order products.

Cushion characteristics table

Bore size (mm)	Effective cushion length (mm)	Allowable energy (J)	
		With cushion	Without cushion
ø40	13.5	5.14	0.137
ø50	13.5	6.41	0.137
ø63	13.5	11.37	0.205
ø80	15.4	25.4	0.360

● Cushion

The purpose of the cushion is to absorb the piston's kinetic energy with air compressibility, preventing the piston and cover from colliding at the stroke end. Therefore, the cushion itself does not reduce the piston speed at the stroke end.

Note that the left table shows the kinetic energy which can be absorbed by the cushion. If the kinetic energy exceeds these values, or if bouncing caused by the air compressibility is to be avoided, consider using another shock absorber.

Kinetic energy (J) = $\frac{1}{2}$ x load weight (kg) x [speed (m/s)]^2

Cylinder weight

(Unit: kg)

Bore size (mm)	Product weight / 0 mm stroke	Additional weight per 100 mm stroke	Accessory weight					Switch weight	Mounting bracket weight			Tie rod weight at 0 mm stroke	Additional weight of tie rod per S = 10 mm
			Axial foot	Rod clevis	Rod eye	Limit switch mounting base	Dog bracket		T type		H type		
									Tie rod mount	Band mounting			
ø40	0.75	0.34	0.21	0.37	0.27	0.18	0.08	Refer to the weight in the switch specifications.	0.021	0.007	0.024	0.019	0.003
ø50	0.82	0.36								0.008			
ø63	1.03	0.39								0.009			
ø80	2.80	0.60	-	0.95	-	-	-			0.010		0.030	

(Example) Product weight of CAC4-G4-A-40-150-Y

● Product weight for stroke 0 mm ..... 0.75 kg

● Additional weight for stroke 150 mm..... 0.34 x $\frac{150}{100}$ = 0.51 kg

● Accessory weight (rod clevis) ..... 0.37 kg

● Product weight ..... 0.75 + 0.51 + 0.37 = 1.63 kg

LCM
LCR
LCG
LCW
LCX
STM
STG
STS/STL
STR2
UCA2
ULK*
JSK/M2
JSG
JSC3/JSC4
USSD
UFCD
USC
UB
JSB3
LMB
LML
HCM
HCA
LBC
CAC4
UCAC2
CAC-N
UCAC-N
RCS2
RCC2
PCC
SHC
MCP
GLC
MFC
BBS
RRC
GRC
RV3*
NHS
HRL
LN
Hand
Chuk
MecHnd/Chuk
ShkAbs
FJ
FK
SpdContr
Ending

Switch specifications

● Proximity switch for AC magnetic field

Item	Proximity 2-wire	
	T2YD, T2YDT (*4)	T2YDU (Made to order)
Applications	Dedicated for programmable controller	
Indicator	Red/green LED (Lit when ON)	
Load voltage	24 VDC ±10%	
Load current	5 to 20 mA	
Internal voltage drop	6V or less	
Leakage current	1.0 mA or less	
Output delay time *1 (ON Delay, OFF delay)	60 ms or less	
Lead wire length	1 m (oil resistant vinyl cabtyre cable ø 6, 0.5 mm^2 x 2-conductor) *2, *3	0.3 m (flame-resistant cabtyre cable with cable connector, 0.5 mm^2, 2-conductor)
Insulation resistance	100 MΩ and over with 500 VDC megger	
Withstand voltage	No failure after 1 minute of 1,000 VAC.	
Shock resistance	980 m/s^2	
Ambient temperature	-10 to +60°C	
Degree of protection	JIS C0920 (water-tight), IEC standards IP67, oil resistance	
Weight g	1 m:61 3 m:166 5 m:272	35

*1: Indicates the time from magnetic sensor detection of the piston magnet until switch output.
*2: 3 m and 5 m lead wires are available as options.
*3: Flame-resistant lead wires are available as options.
*4: Switch for AC magnetic field (T2YD, T2YDT) cannot be used in DC magnetic field.
*5: Refer to Ending Page 1 for detailed switch specifications and dimensions.

● Strong magnetic field proof reed switch

Item	Reed 2-wire		
	HO		HOY (2-color LED)
Applications	For programmable controller, relay		Dedicated for programmable controller
Load voltage	12/24 VDC	110 VAC	24 VDC
Load current	5 to 50 mA	7 to 20 mA	5 to 20 mA (*1)
Internal voltage drop	5V or less		6V or less
Leakage current	10 μA or less		10 μA or less
Indicator	Green LED (Lit when ON)		Red/green LED (Lit when ON)
Lead wire (standard)	1 m (flame-resistant cabtyre cable ø6, 0.5 mm^2 x 2-conductor)		
Insulation resistance	100 MΩ and over with 500 VDC megger		
Withstand voltage	No failure after 1 minute of 1,000 VAC application.		
Shock resistance	294 m/s^2		
Ambient temperature	-10 to +60°C		
Degree of protection	IEC Standard IP67, JIS C9020 (water-tight), oil resistance		
Weight g	1 m:76 3 m:181 5 m:289		

*1: The above max. load current is 20 mA at 25°C. The current is lower than 20 mA if the operating ambient temperature around the switch is higher than 25˚C. (5 to 10 mA at 60°C)

Theoretical thrust table

(Unit: N)

Bore size (mm)	Operating direction	Working pressure MPa										
		0.1	0.15	0.2	0.3	0.4	0.5	0.6	0.7	0.8	0.9	1.0
ø40	Push	$1.26x10^2$	$1.88x10^2$	$2.51x10^2$	$3.77x10^2$	$5.03x10^2$	$6.28x10^2$	$7.54x10^2$	$8.80x10^2$	$1.01x10^3$	$1.13x10^3$	$1.26x10^3$
	Pull	94.2	$1.41x10^2$	$1.88x10^2$	$2.83x10^2$	$3.77x10^2$	$4.71x10^2$	$5.65x10^2$	$6.60x10^2$	$7.54x10^2$	$8.48x10^2$	$9.42x10^2$
ø50	Push	$1.96x10^2$	$2.95x10^2$	$3.93x10^2$	$5.89x10^2$	$7.85x10^2$	$9.82x10^2$	$1.18x10^3$	$1.37x10^3$	$1.57x10^3$	$1.77x10^3$	$1.96x10^3$
	Pull	$1.65x10^2$	$2.47x10^2$	$3.30x10^2$	$4.95x10^2$	$6.60x10^2$	$8.25x10^2$	$9.90x10^2$	$1.15x10^3$	$1.32x10^3$	$1.48x10^3$	$1.65x10^3$
ø63	Push	$3.12x10^2$	$4.68x10^2$	$6.23x10^2$	$9.35x10^2$	$1.25x10^3$	$1.56x10^3$	$1.87x10^3$	$2.18x10^3$	$2.49x10^3$	$2.81x10^3$	$3.12x10^3$
	Pull	$2.80x10^2$	$4.20x10^2$	$5.61x10^2$	$8.41x10^2$	$1.12x10^3$	$1.40x10^3$	$1.68x10^3$	$1.96x10^3$	$2.24x10^3$	$2.52x10^3$	$2.80x10^3$
ø80	Push	$5.03x10^2$	$7.54x10^2$	$1.01x10^3$	$1.51x10^3$	$2.01x10^3$	$2.51x10^3$	$3.02x10^3$	$3.52x10^3$	$4.02x10^3$	$4.52x10^3$	$5.03x10^3$
	Pull	$4.54x10^2$	$6.80x10^2$	$9.07x10^2$	$1.36x10^3$	$1.81x10^3$	$2.27x10^3$	$2.72x10^3$	$3.17x10^3$	$3.63x10^3$	$4.08x10^3$	$4.54x10^3$

LCM
LCR
LCG
LCW
LCX
STM
STG
STS/STL
STR2
UCA2
ULK*
JSK/M2
JSG
JSC3/JSC4
USSD
UFCD
USC
UB
JSB3
LMB
LML
HCM
HCA
LBC
CAC4
UCAC2
CAC-N
UCAC-N
RCS2
RCC2
PCC
SHC
MCP
GLC
MFC
BBS
RRC
GRC
RV3*
NHS
HRL
LN
Hand
Chuk
MecHnd/Chuk
ShkAbs
FJ
FK
SpdContr
Ending

How to order

Without switch (built-in magnet for switch)

CAC4-G4 - A - 40 B - 50 R ———— Y1

With switch (built-in magnet for switch)

CAC4-G4 - A - 40 B - 50 R - T2YD - R B - Y1

With strong magnetic field proof (for H0, H0Y switches) switch (built-in magnet for switch)

CAC4-G4L2 - A - 40 B - 50 R — H0 - R B - Y1

A Clevis width *1

B Bore size

C Port thread

D Cushion

E Stroke

F Speed adjustment Needle

G Switch model No. *3

* indicates the lead wire length.

H Switch quantity

I Switch mounting position and mounting *5

J Accessory *6 *7 *8

Code	Description				
A Clevis width (mm)					
	Bore size (ø)	ø40	ø50	ø63	ø80
Blank	28				●
A	16.5	●	●	●	
B	19.5	●	●	●	
AL	16.5 (Axial foot)	●	●	●	
BL	19.5 (Axial foot)	●	●	●	

B Bore size (mm)	
40	ø40
50	ø50
63	ø63
80	ø80

C Port thread	
Blank	Rc thread
N	NPT thread
G	G thread

D Cushion	
Blank / H *2	Head side cushioned
B	Both sides cushioned
N	Without cushion

E Stroke (mm)
50, 75, 100, 125, 150

F Speed adjustment needle	
Blank	With both sides
R	With rod side
H	With head side
N	None

G Switch model No.

Straight Lead wire	L-shaped Lead wire	Contact	Voltage AC	Voltage DC	Indicator	Lead wire
T2YD*	-	Proximity		●	2-color LED for AC magnetic field	2-wire
T2YDT*	-	Proximity		●	2-color LED for AC magnetic field	2-wire
T2YDU	-	Proximity		●	Switch with connector (AC magnetic field)	2-wire
H0*	-	Reed	●	●	Strong magnetic field proof switch	2-wire
H0Y*	-	Reed		●	Strong magnetic field 2-color LED	2-wire

*** Lead wire length**	
Blank	1 m (standard)
3	3 m (option)
5	5 m (option)

H Switch quantity	
R	1 on rod side
H	1 on head side
D	2

I Switch mounting position and mounting

Blank	Tie rod mounting	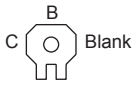
B	Tie rod mounting	
C	Tie rod mounting	
Z *4	Band mounting	

*** Selectable only when the switch model No. is not specified Tie rod mounting position**	
Blank	Without tie rod
A	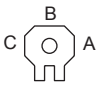
B	
C	

J Accessory

	Bore size	ø40	ø50	ø63	ø80
Blank	Without accessory (rod eye)	●	●	●	●
Y	Rod clevis Cast iron	●	●	●	
Y1	Rod clevis Steel	●	●	●	●
I	Rod eye Steel	●	●	●	
D	With dog Limit switch	●	●	●	
D1	Without dog mounting base	●	●	●	
Q	Clamp bracket	●	●	●	

Precautions for model No. selection

*1: A clevis pin, split pin, and plain washer are attached with A, B, AL and BL.
The clevis width and rod clevis width are the same.
*2: If blank is selected for C Port thread, the head side cushion comes with "Blank" for D Cushion and "H" for all other options.
*3: T2YD, T2YDT, T2YDU, HO and HOY are strong magnetic field proof switches.
4: Cannot be selected with G Switch model No. "HO", "HOY*".
*5: For the mounting band, a switch body + mounting bracket set + band are shipped with the product.
*6: A pin, split pin, and plain washer are attached with Y and Y1.
*7: For Q, piston rod protruding length is different from the standard. This cannot be mounted on the standard.
*8: When selecting "Q", only "A" can be selected for A Clevis width.

[Example of model No.]

CAC4-G4-A-40B-50R-T2YD-RB-Y1

Models: Clamp cylinder/anti-spatter adherence

A Clevis width	: 16.5 mm
B Bore size	: ø40 mm
C Port thread	: Rc thread
D Cushion	: With both sides
E Stroke	: 50 mm
F Speed adjustment needle	: With rod side
G Switch model No.	: Proximity switch T2YD, Lead wire length 1 m
H Switch quantity	: 1 on rod side
I Switch mounting position and mounting	: B
J Accessory	: Rod clevis (SS400)

LCM
LCR
LCG
LCW
LCX
STM
STG
STS/STL
STR2
UCA2
ULK*
JSK/M2
JSG
JSC3/JSC4
USSD
UFCD
USC
UB
JSB3
LMB
LML
HCM
HCA
LBC
CAC4
UCAC2
CAC-N
UCAC-N
RCS2
RCC2
PCC
SHC
MCP
GLC
MFC
BBS
RRC
GRC
RV3*
NHS
HRL
LN
Hand
Chuk
MecHnd/Chuk
ShkAbs
FJ
FK
SpdContr
Ending

How to order switch

● T2YD* type switch

A) Switch body + mounting bracket set (=B+C+D)

CAC4 - T2YD - 40 - 50

- T2YD: Switch model No. (Item Ⓖ on page 1022)
- 40: Bore size (Item Ⓑ on page 1022)
- 50: Stroke (Item Ⓔ on page 1022)

B) Switch body only

SW - T2YD

- T2YD: Switch model No. (Item Ⓕ on page 1022)

C) Mounting bracket kit

CAC4 - T - 40

- 40: Bore size (Item Ⓑ on page 1022)

D) Mounting tie rod kit

CAC4 - 40 - TIE - ROD - KIT - 50

- 40: Bore size (Item Ⓑ on page 1022)
- 50: Stroke (Item Ⓔ on page 1022)

● H-switch

A) Switch body + mounting bracket set (=B+C+D)

CAC4-L2 - H0 - 40 - 50

- H0: Switch model No. (Item Ⓖ on page 1022)
- 40: Bore size (Item Ⓑ on page 1022)
- 50: Stroke (Item Ⓔ on page 1022)

B) Switch body only

SW - H0

- H0: Switch model No. (Item Ⓖ on page 1022)

C) Mounting bracket kit

CAC4-L2 - H - 40

- 40: Bore size (Item Ⓑ on page 1022)

D) Mounting tie rod kit

CAC4 - 40 - TIE - ROD - KIT - 50

- 40: Bore size (Item Ⓑ on page 1022)
- 50: Stroke (Item Ⓔ on page 1022)

[Switch mounting: Band]

A) Switch body + mounting bracket set + band (=B+C)

CAC4 - T0H - 40 - Z

- T0H: Switch model No. (Item Ⓖ on page 1022)
- 40: Bore size (Item Ⓑ on page 1022)

B) Switch body only

SW - T0H

- T0H: Switch model No. (Item Ⓖ on page 1022)

C) Mounting bracket set + band

CAC4 - Z - 40

- 40: Bore size (Item Ⓑ on page 1022)

Internal structure and parts list (ø40 to ø63)

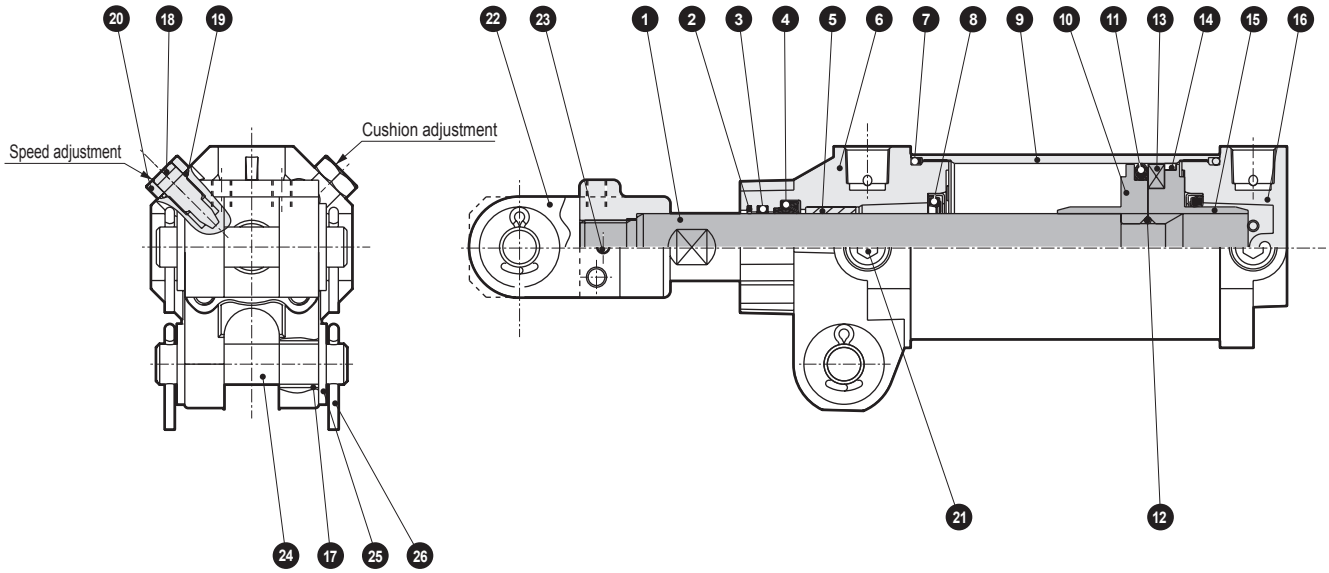

Note)❽cushion packing is attached to the rod side only when both sides are cushioned.

Part No.	Part name	Material	Remarks	Part No.	Part name	Material	Remarks
1	Piston rod	Steel	Industrial chrome plating	14	Wear ring	Polyacetal resin	
2	Metal scraper	Copper alloy		15	Piston (H)	Aluminum alloy die-casting	ø40: Aluminum alloy
3	Lube keeping structure	Special rubber		16	Head cover	Aluminum alloy die-casting	Chromate
4	Rod packing	Nitrile rubber		17	Bush for clevis	Steel, copper	
5	Bush	Copper alloy		18	Needle	Copper alloy	
6	Rod cover	Aluminum alloy die-casting	Chromate	19	Needle gasket	Nitrile rubber	
7	Cylinder gasket	Nitrile rubber		20	Hexagon nut	Steel	Chromate
8	Cushion packing	Nitrile rubber, steel	Chromate	21	Hexagon socket plug	Steel	Black finish
9	Cylinder tube	Aluminum alloy	Hard alumite treatment	22	Rod clevis	Y: Cast iron Y1: Steel	Y: Manganese phosphate Y1: Black finish
10	Piston (R)	Aluminum alloy die-casting	ø40: Aluminum alloy	23	Spring pin	Steel	Black finish
11	Piston packing	Nitrile rubber		24	Clevis pin	Steel	Black finish
12	Piston gasket	Nitrile rubber		25	Flat washer	Steel	Chromate
13	Magnet	Plastic		26	Split pin	Steel	Chromate

Internal structure and parts list (ø80)

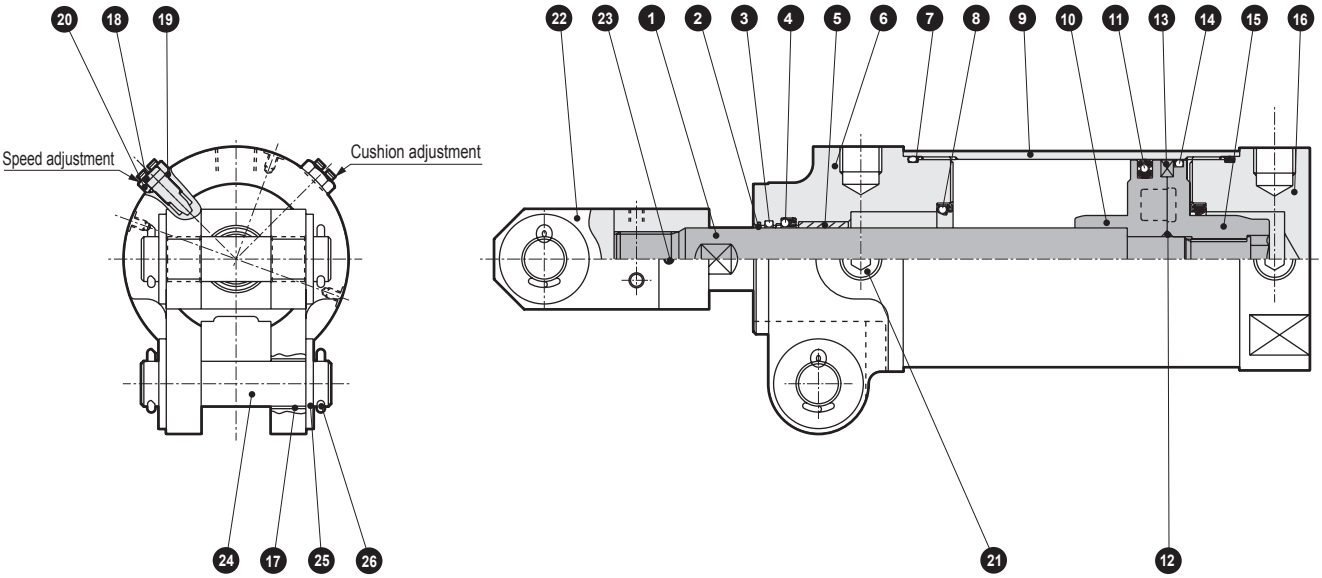

Note) Cushion packing ❽ is attached to the rod side only when both sides are cushioned.

No.	Part name	Material	Remarks	No.	Part name	Material	Remarks
1	Piston rod	Steel	Industrial chrome plating	14	Wear ring	Polyacetal resin	
2	Metal scraper	Copper alloy		15	Piston (H)	Aluminum alloy die-casting	
3	Lube keeping structure	Special rubber		16	Head cover	Aluminum alloy	Chromate
4	Rod packing	Nitrile rubber		17	Bush for clevis	Steel, copper	
5	Bush	Copper alloy		18	Needle	Steel	Chromate
6	Rod cover	Aluminum alloy casting	Chromate	19	Needle gasket	Nitrile rubber	
7	Cylinder gasket	Nitrile rubber		20	Hexagon nut	Steel	Chromate
8	Cushion packing	Nitrile rubber, steel	Chromate	21	Hexagon socket plug	Steel	Black finish
9	Cylinder tube	Aluminum alloy	Hard alumite treatment	22	Rod clevis	Steel	Black finish
10	Piston (R)	Aluminum alloy die-casting		23	Spring pin	Steel	Black finish
11	Piston packing	Nitrile rubber		24	Clevis pin	Steel	Black finish
12	Piston gasket	Nitrile rubber		25	Plain washer	Steel	Chromate
13	Magnet	Plastic		26	Split pin	Steel	Chromate

Dimensions

Same as double acting/single rod. Refer to pages 1014 to 1017.
For accessories, refer to page 1018.

LCM
LCR
LCG
LCW
LCX
STM
STG
STS/STL
STR2
UCA2
ULK*
JSK/M2
JSG
JSC3/JSC4
USSD
UFCD
USC
UB
JSB3
LMB
LML
HCM
HCA
LBC
CAC4
UCAC2
CAC-N
UCAC-N
RCS2
RCC2
PCC
SHC
MCP
GLC
MFC
BBS
RRC
GRC
RV3*
NHS
HRL
LN
Hand
Chuk
MecHnd/Chuk
ShkAbs
FJ
FK
SpdContr
Ending

Specifications

Model No. / Item	T2YDU (Made to order)
Applications	Dedicated for DC programmable controller
Switch polarity	No polarity
Indicator lamp	Red/green LED (Lit when ON) (Refer to Fig.1)
Load voltage	24 VDC ±10%
Load current	DC5 to 20 mA
Internal voltage drop	6V or less
Leakage current	1.0 mA or less
Lead wire	Flame-resistant cabtyre cable with cable connector, 0.5 mm^2, 2-conductor
Insulation resistance	100 MΩ and over with 500 VDC megger
Withstand voltage	No failure after 1 minute of 1,000 VAC.
Shock resistance	980 m/s^2
Output delay time (ON Delay, OFF delay)	60 ms or less
Operating ambient temperature	-10 to +60°C
Storage ambient temperature	-20 to +80°C
Degree of protection	JIS C0920 (water-tight), IP67, oil resistance

Operation chart

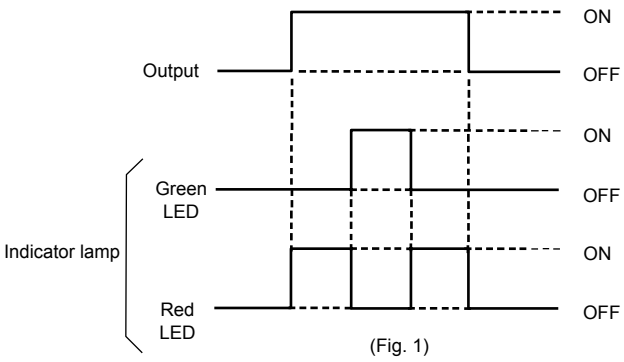

(Fig. 1)

Internal circuit diagram

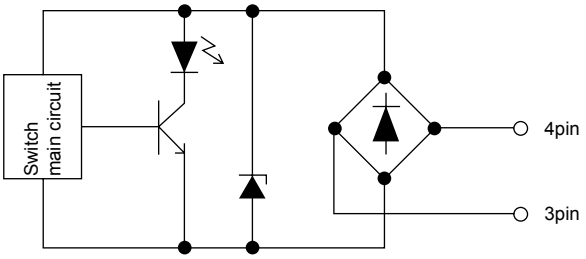

1 and 2-pin are NC

Dimensions

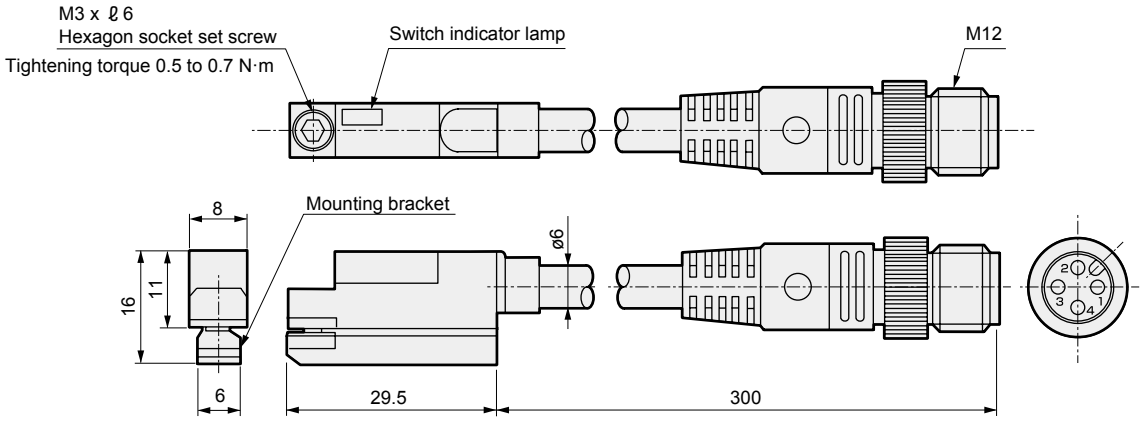

T type switch mounting and travel method

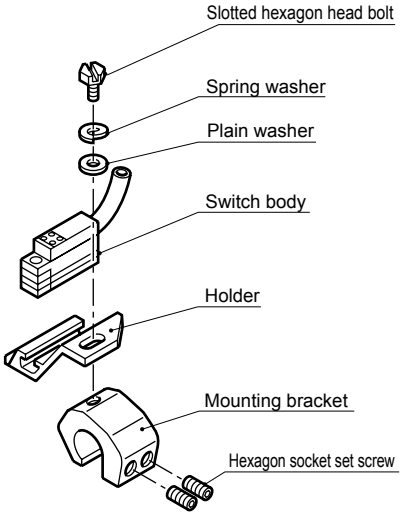

Mounting method

(1) Pass the plain and spring washers through the slotted hexagon head bolt, and fit it onto the holder.
(2) Fit the bracket onto the cylinder tie rod and tighten the hexagon socket head cap screw. Tightening torque is 0.5 to 0.7 N·m.
(3) Lastly, tighten the hexagon socket set screw. Tightening torque is 1.7 to 2.0N·m.

Travel method

(1) Fine adjustment
Loosen the slotted hex socket bolt, move only the switch body, and fix at the required position. Tightening torque is 0.5 to 0.7 N·m.
(2) Rough adjustment
Completely loosen the slotted bolt and set screws, and move the entire mounting bracket to the required position. Tighten the slotted bolt. Tightening torque is 0.5 to 0.7 N·m.
Then tighten the set screw. Tightening torque is 1.7 to 2.0N·m.

H type switch mounting and travel method

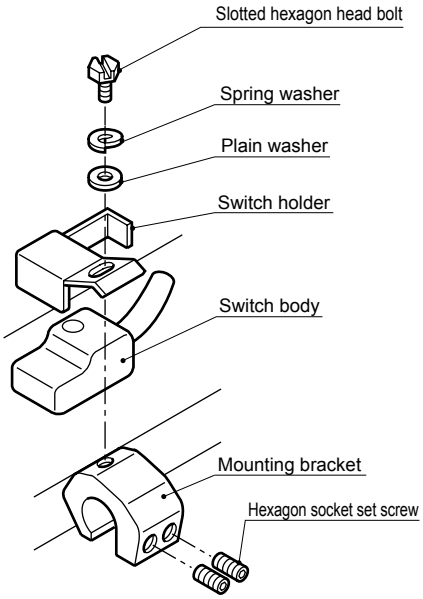

Mounting method

(1) Pass the plain and spring washers through the slotted hexagon head bolt, and fit the bracket onto the switch holder slot.
(2) Fit the bracket onto the cylinder tie rod and tighten the hexagon socket head cap screw. Tightening torque is 1.5 to 1.9N·m.
(3) Lastly, tighten the set screw. Tightening torque is 1.7 to 2.0N·m.

Travel method

(1) Fine adjustment
Loosen the slotted hex socket bolt of the switch holder, move only the switch body, and fix at the required position. Tightening torque is 1.5 to 1.9N·m.
(2) Rough adjustment
Completely loosen the slotted bolt and set screws, and move the entire mounting bracket to the required position. Tighten the slotted bolt. Then tighten the set screw. Tightening torque is 1.7 to 2.0N·m.

Pneumatic components

Safety Precautions

Be sure to read this section before use.

Refer to Intro Page 73 for general information of the cylinder, and to Intro Page 80 for general information of the cylinder switch.

Product-specific cautions: Clamp cylinder CAC4 Series

Design/selection

1. Anti-spatter adherence CAC4-G4

WARNING

■ The durability of this cylinder series is improved in comparison to standard cylinders when used in an atmosphere exposed to spatter. But durability may be shorter than the standard cylinder when used in other atmospheres.

Use/maintenance

1. Common (With T type switch: band mounting)

WARNING

■ When moving the switch position to the stroke length direction

- The 1-color display switch can be fine-tuned by ±3 mm from the default. If the adjusting range exceeds ±3 mm, or when fine-tuning the 2-color display switch, move the band position.
- Loosen the switch fixing screw, shift the switch along the rail, then tighten at the specified position.
  When using T2, T3, T0, or T5, use a flathead screwdriver (clockwork screwdriver, precision screwdriver, etc.) with a grip diameter of 5 to 6 mm, a 2.4 mm or smaller tip, and a thickness of 0.3 mm or less to tighten the screws with a tightening torque of 0.1 to 0.2 N·m.
  When using T*C, T2J, T2Y, or T3Y, tighten the screw with a tightening torque of 0.5 to 0.7 N·m.
- The switch bracket rail has a marking 4 mm from the rail end. Use as a guide to the mounting position when replacing the switch.
  Switch rail markings are set to the switch max. sensitivity position, which is the switch mounting position in the dimensions.
  The max. sensitivity position will change when the switch is changed or when the band is moved. Adjust the position accordingly in this case.

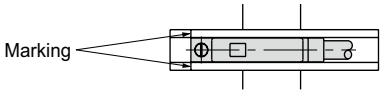

■ When moving the switch position to the circumferential direction

- Loosen the band fixing screw, shift the switch rail in the circumferential direction, then tighten at the specified position. The tightening torque of band fixing screw is 0.6 to 0.8 N·m.

■ Shifting the band position

- Loosen the band fixing screw, shift the switch rail and band along the cylinder tube, and tighten at the specified position. The tightening torque of band fixing screw is 0.6 to 0.8 N·m.

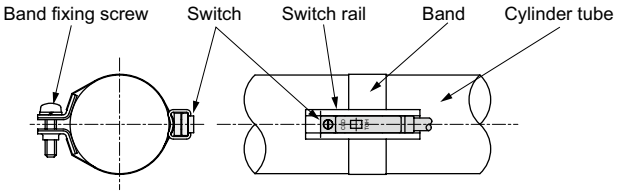

UCAC2

Position locking clamp cylinder

ø50/ø63

Special

Overview

A position locking clamp cylinder has been developed with attention to equipment maintenance. The new swash plate mechanism locks the rod when the air supply is stopped to prevent the load from falling in the event of power failures or accidents. Moreover, the one-way lock allows the rod to be moved in the opposite direction to facilitate the emergency removal of workpieces, etc.

Features

Lockable at any point throughout full stroke

The locking position can be at any point throughout the full stroke, including the stroke end, as long as the piston rod remains still.

2 types of lock direction.

Either forward lock or backward lock can be selected.

Reverse direction is free due to the one-way lock.

The rod moves in the free direction even when gripping the workpiece, allowing it to be removed.

Various detection switches can be mounted.

It can be equipped with cylinder switches for various applications, such as proximity and strong magnetic field proof switches.

Position locking structure.

The new swash plate lock mechanism enables position locking in free positions. Applying torque M to the lock metal generates axial force F. This force holds the rod.

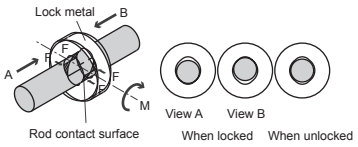

Selectable switch mounting style

In addition to the conventional tie rod style, the band style that is capable of free rotation of switch (circumference direction)/free adjustment of movement has been added.

CONTENTS

● Double acting/single rod (UCAC2) 1030

UCAC2 accessory dimensions 1038

⚠Safety precautions 1039

The cylinder switches T2YH, T2YV, T3YH, and T3YV are scheduled for end of production at the end of December 2023.

Series variation

●: Standard, ◎: Option

Variation	Model No. JIS symbol	Bore size (mm)	Standard stroke (mm)					Min. stroke (mm)	Max. stroke (mm)	Options/accessories							Switch	Page
			50	75	100	125	150			Bellows (100°C) K	Limit switch mounting base with dog D	Limit switch mounting base without dog D1	Toggle bracket Q	Rod clevis Cast iron Y	Rod clevis Steel Y1	Rod eye Steel I		
Double acting/ single rod	UCAC2	ø50/ø63	●	●	●	●	●	50	150	◎	◎	◎	◎	◎	◎	◎	◎	1030

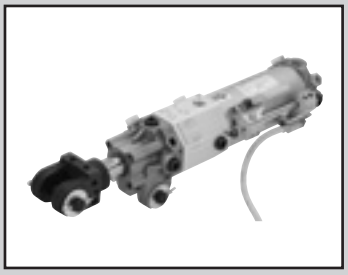

Position locking clamp cylinder

UCAC2 Series

● Bore size: ø50/ø63

JIS symbol ● Double acting/single rod

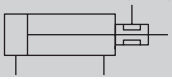

RoHS CAD

Specifications

Item		UCAC2	
Bore size	mm	ø50	ø63
Actuation		Double acting	
Working fluid		Compressed air	
Max. working pressure	MPa	1.0 (≈150 psi, 10 bar)	
Min. working pressure	MPa	0.25 (≈36 psi, 2.5 bar)	
Proof pressure	MPa	1.6 (≈230 psi, 16 bar)	
Ambient temperature	°C	-10 (14°F) to 60 (140°F) (no freezing)	
Port size		Rc1/4	
Standard stroke	mm	50, 75, 100, 125, 150	
Stroke tolerance		$^{+1.0}_{0}$	
Working piston speed	mm/s	50 to 400	50 to 300
Cushion		Head side air cushioned	
Lubrication		Not available	
Mounting		Clevis bracket	
Position locking mechanism		Forward/backward locking	
Lock force	N	1470	
Allowable absorbed energy	Cushioned	6.54	11.63
	J Without cushion	0.137	0.206

Note: Without any cushion, this product cannot absorb large energy generated by an external load. We recommend using an external shock absorber.

Stroke

Bore size (mm)	Standard stroke (mm)	Min. stroke (mm)	Max. stroke (mm)
ø50	50/75/100/125/150	50	150
ø63			

Products other than standard stroke are made-to-order products.

Switch specifications (T-switch)

● 1-color/2-color LED

Item	Proximity 2-wire	Proximity 2-wire			Proximity 3-wire				Reed 2-wire						
	T1H/T1V	T2H/T2V/ T2JH/T2JV	T2YH/ T2YV	T2WH/ T2WV	T3H/ T3V	T3PH/ T3PV	T3YH/ T3YV	T3WH/ T3WV	T0H/T0V		T5H/T5V		T8H/T8V		
Applications	For programmable controller, relay, compact solenoid valve	Dedicated for programmable controller			For programmable controller, relay				For programmable controller, relay		For programmable controller, relay, IC circuit (no indicator lamp), serial connection		For programmable controller, relay		
Output method	-				NPN output	PNP output	NPN output	NPN output	-						
Pwr. supp. V.	-				10 to 28 VDC				-						
Load voltage	85 to 265 VAC	10 to 30 VDC		24 VDC ±10%	30 VDC or less				12/24 VDC	110 VAC	5/12/24 VDC	110 VAC	12/24 VDC	110 VAC	220 VAC
Load current	5 to 100 mA	5 to 20 mA (*3)			100 mA or less		50 mA or less		5 to 50 mA	7 to 20 mA	50 mA or less	20 mA or less	5 to 50 mA	7 to 20 mA	7 to 10 mA
Indicator	LED (Lit when ON)	LED (Lit when ON)	Red/green LED (Lit when ON)	Red/green LED (Lit when ON)	LED (Lit when ON)	Yellow LED (Lit when ON)	Red/green LED (Lit when ON)	Red/green LED (Lit when ON)	LED (Lit when ON)		No indicator lamp		LED (Lit when ON)		
Leakage current	≤ 1 mA at 100 VAC, ≤ 2 mA at 200 VAC	1 mA or less			10 μA or less				0 mA						
Weight g	1 m:33	1 m:18	1 m:33	1 m:18	1 m:18		1 m:33	1 m:18	1 m:18				1 m:33		
	3 m:87	3 m:49	3 m:87	3 m:49	3 m:49		3 m:87	3 m:49	3 m:49				3 m:87		
	5 m:142	5 m:80	5 m:142	5 m:80	5 m:80		5 m:142	5 m:80	5 m:80				5 m:142		

*1 : Refer to Ending Page 1 for detailed switch specifications and dimensions.
*2 : Switches other than the above models, such as switches with connectors, are also available. Refer to Ending Page 1.
*3 : The max. load current is 20 mA at 25°C. The current is lower than 20 mA if the operating ambient temperature around the switch is higher than 25°C. (5 to 10 mA at 60°C)

● For AC magnetic field

Item	Proximity 2-wire	
	T2YD, T2YDT	T2YDU (Made to order)
Applications	Dedicated for programmable controller	
Indicator	Red/green LED (Lit when ON)	
Load voltage	24 VDC ±10%	
Load current	5 to 20 mA	
Internal voltage drop	6V or less	
Leakage current	1.0 mA or less	
Output delay time *1 (ON Delay, OFF delay)	60 ms or less	
Lead wire length	1 m (oil resistant vinyl cabtyre cable ø 6, 0.5 mm^2 x 2-conductor) *2, *3	Flame-resistant cabtyre cable with cable connector, 0.5 mm^2, 2-conductor
Insulation resistance	100 MΩ and over with 500 VDC megger	
Withstand voltage	No failure after 1 minute of 1,000 VAC application.	
Shock resistance	980 m/s^2	
Ambient temperature	-10 to +60°C	
Degree of protection	JIS C0920 (water-tight), IEC standards IP67, oil resistance	
Weight g	1 m:61 3 m:166 5 m:272	

*1: Indicates the time from magnetic sensor detection of the piston magnet until switch output.
*2: 3 m and 5 m lead wires are available as options.
*3: Flame-resistant lead wires are available as options.
*4: Switch for AC magnetic field (T2YD, T2YDT) cannot be used in DC magnetic field.

Switch specifications (H-switch)

● Strong magnetic field

Item	Reed 2-wire		
	H0		H0Y (2-color LED)
Applications	For programmable controller, relay		Dedicated for programmable controller
Load voltage	12/24 VDC	110 VAC	24 VDC
Load current	5 to 50 mA	7 to 20 mA	5 to 20 mA (*1)
Internal voltage drop	5V or less		6V or less
Leakage current	10 μA or less		10 μA or less
Indicator	Green LED (Lit when ON)		Red/green LED (Lit when ON)
Lead wire (standard)	1 m (flame-resistant cabtyre cable 2-conductor 0.5 mm^2)		
Insulation resistance	100 MΩ and over with 500 VDC megger		
Withstand voltage	No failure after 1 minute of 1,000 VAC application.		
Shock resistance	294 m/s^2		
Ambient temperature	-10 to +60°C		
Degree of protection	IEC Standard IP67, JIS C9020 (water-tight), oil resistance		
Weight g	1 m:76 3 m:181 5 m:289		

*1: The above max. load current is 20 mA at 25°C. The current is lower than 20 mA if the operating ambient temperature around the switch is higher than 25˚C. (5 to 10 mA at 60°C)

Cylinder weight

(Unit: kg)

Bore size (mm)		Product weight per 0 mm stroke	Additional weight per 100 mm stroke	Accessory weight: Axial foot	Rod clevis	Rod eye	Limit switch mounting base	Dog bracket	Switch weight	Mounting bracket weight: T type: Tie rod mount	T type: Band mounting	H type	Weight of tie rod at 0 mm stroke	Additional weight of tie rod per S = 10 mm
ø50	Forward locking: F	1.61	0.40	0.21	0.37	0.27	0.18	0.08	Refer to the weight in the switch specifications.	0.021	0.008	0.024	0.019	0.003
	Backward locking: B	1.56	0.39											
ø63	Forward locking: F	2.11	0.40								0.009			
	Backward locking: B	2.06	0.39											

(Example) Product weight of UCAC2-A-50B-50R-B-TOH-D

- ● Product weight at 0 mm stroke (backward locking: B) ..... 1.56 kg
- ● Additional weight per 50 mm stroke ..... 0.39 x $\frac{50}{100}$ = 0.195 kg
- ● Weight of tie rod at 0 mm stroke ..... 0.019 kg
- ● Additional weight of tie rod at 50 mm stroke ..... 0.003 x $\frac{50}{10}$ = 0.015 kg
- ● Weight of 2 TOH switches ..... 0.018x2 = 0.036 kg
- ● Weight of 2 mounting brackets ..... 0.021x2 = 0.042 kg
- ● Product weight ..... 1.56 + 0.195 + 0.019 + 0.015 + 0.036 + 0.042 = 1.867 kg

Theoretical thrust table

(Unit: N)

Bore size (mm)	Operating direction	Working pressure MPa: 0.25	0.3	0.4	0.5	0.6	0.7	0.8	0.9	1.0
ø50	Push	$4.91x10^2$	$5.89x10^2$	$7.85x10^2$	$9.82x10^2$	$1.18x10^3$	$1.37x10^3$	$1.57x10^3$	$1.77x10^3$	$1.96x10^3$
	Pull	$4.12x10^2$	$4.95x10^2$	$6.60x10^2$	$8.25x10^2$	$9.90x10^2$	$1.15x10^3$	$1.32x10^3$	$1.48x10^3$	$1.65x10^3$
ø63	Push	$7.79x10^2$	$9.35x10^2$	$1.25x10^3$	$1.56x10^3$	$1.87x10^3$	$2.18x10^3$	$2.49x10^3$	$2.81x10^3$	$3.12x10^3$
	Pull	$7.01x10^2$	$8.41x10^2$	$1.12x10^3$	$1.40x10^3$	$1.68x10^3$	$1.96x10^3$	$2.24x10^3$	$2.52x10^3$	$2.80x10^3$

LCM
LCR
LCG
LCW
LCX
STM
STG
STS/STL
STR2
UCA2
ULK*
JSK/M2
JSG
JSC3/JSC4
USSD
UFCD
USC
UB
JSB3
LMB
LML
HCM
HCA
LBC
CAC4
UCAC2
CAC-N
UCAC-N
RCS2
RCC2
PCC
SHC
MCP
GLC
MFC
BBS
RRC
GRC
RV3*
NHS
HRL
LN
Hand
Chuk
MecHnd/Chuk
ShkAbs
FJ
FK
SpdContr
Ending

How to order

Without switch (built-in magnet for switch)

UCAC2-A-50NB-50N-B——Y1

With switch (built-in magnet for switch)

UCAC2-A-50NB-50N-B-T2H-DB-Y1

With strong magnetic field proof (for H0, H0Y switches) switch (built-in magnet for switch)

UCAC2-L2-A-50NB-50N-B—H0-DB-Y1

Ⓐ Clevis width *1

Ⓑ Bore size

Ⓒ Port thread

Ⓓ Cushion

Ⓔ Stroke

Ⓕ Speed adjustment needle

Ⓖ Lock direction

Ⓗ Switch model No.

Ⓘ Switch quantity

Ⓙ Switch mounting position and mounting *3

Ⓚ Accessory *5 *6 *7

Code	Description
Ⓐ Clevis width (mm)	
A	16.5
B	19.5
AL	16.5 (Axial foot)
BL	19.5 (Axial foot)
Ⓑ Bore size (mm)	
50	ø50
63	ø63
Ⓒ Port thread	
Blank	Rc thread
N	NPT thread (made-to-order product)
G	G thread (made-to-order product)
Ⓓ Cushion	
Blank/H *2	Head side cushioned
B	Both sides cushioned
N	Without cushion
Ⓔ Stroke (mm)	
50, 75, 100, 125, 150	
Ⓕ Speed adjustment needle	
Blank	With both sides
R	With rod side
H	With head side
N	None
Ⓖ Lock direction/bypass tube position	
F	Forward lock (bypass tube position F, port position F1)
F1	Forward lock (bypass tube position F1, port position F2)
F2	Forward lock (bypass tube position F2, port position F1)
B	Backward locking

Ⓗ Switch model No.

Lead wire Straight	Lead wire L-shaped	Contact	Voltage AC	Voltage DC	Indicator	Lead wire
T0H*	T0V*	Reed	●	●	1-color LED	2-wire
T5H*	T5V*	Reed	●	●	No indicator lamp	2-wire
T8H*	T8V*	Reed	●	●	1-color LED	2-wire
T1H*	T1V*	Proximity	●		1-color LED	2-wire
T2H*	T2V*	Proximity		●	1-color LED	2-wire
T3H*	T3V*	Proximity		●	1-color LED	3-wire
T3PH*	T3PV*	Proximity		●	1-color LED	3-wire
T2YH*	T2YV*	Proximity		●	2-color LED	2-wire
T2WH*	T2WV*	Proximity		●	2-color LED	2-wire
T3YH*	T3YV*	Proximity		●	2-color LED	3-wire
T3WH*	T3WV*	Proximity		●	2-color LED	3-wire
T2YD*	-	Proximity		●	2-color LED AC magnetic field	2-wire
T2YDT*	-	Proximity		●	2-color LED AC magnetic field	2-wire
T2YDU	-	Proximity		●	2-color LED for AC magn field, connector	2-wire
T2JH*	T2JV*	Proximity		●	1-color LED off-delay	2-wire
H0*	-	Reed	●	●	1-color LED for strong magn field	2-wire
H0Y*	-	Reed		●	2-color LED for strong magn field	2-wire

*** Lead wire length**	
Blank	1 m (standard)
3	3 m (option)
5	5 m (option)

Ⓘ Switch quantity	
R	1 on rod side
H	1 on head side
D	2
T	3

Ⓙ Switch mounting position and mounting

Blank	Tie rod mounting	
B	Tie rod mounting	
C	Tie rod mounting	
Z *4	Band mounting	

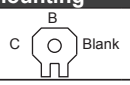

*** Selectable only when the switch model No. is not specified Tie rod mounting position**	
Blank	Without tie rod
A	
B	
C	

Ⓚ Accessory		
Blank	Without accessory (rod eye)	
Y	Rod clevis Cast iron	
Y1	Rod clevis Steel	
I	Rod eye Steel	
K	Bellows	*8, *9
D	Limit switch mounting base	With dog
D1	Limit switch mounting base	Without dog
Q	Clamp bracket	

⚠ Precautions for model No. selection

*1 : A clevis pin, split pin, and plain washer are attached with A/B/AL/BL.
The clevis width and rod clevis width are the same.

*2 : If blank is selected for Ⓒ Port thread, the head side cushion comes with "Blank" for Ⓓ Cushion and "H" for all other options.

*3 : The switch cannot be attached on the same surface as the bypass tube mounting position.

4 : Cannot be selected with Ⓗ Switch model No. "HO", "HOY*".

*5 : A pin, split pin, and plain washer are attached with Y/Y1.

*6 : For Q, piston rod protruding length is different from the standard. This cannot be mounted on the standard.

*7 : When selecting "Q", only "A" can be selected for Ⓐ Clevis width.

*8 : Bellows max. ambient temperature 100°C, instantaneous max. temperature 200°C

*9 : Cannot be mounted if Ⓐ Clevis width is AL or BL.

[Example of model No.]

UCAC2-A-50B-50R-B-T0H-DB-Y

Model: Position locking clamp cylinder double acting

Ⓐ Clevis width	:16.5 mm
Ⓑ Bore size	:ø50 mm
Ⓒ Port thread	:Rc thread
Ⓓ Cushion	:With both sides
Ⓔ Stroke	:50 mm
Ⓕ Speed adjustment needle	:With rod side
Ⓖ Lock direction/bypass tube position	:Backward locking
Ⓗ Switch model No.	:Reed T0H switch, Lead wire 1 m
Ⓘ Switch quantity	:2
Ⓙ Switch mounting position and mounting	:B
Ⓚ Accessory	:Rod clevis Cast iron

LCM
LCR
LCG
LCW
LCX
STM
STG
STS/STL
STR2
UCA2
ULK*
JSK/M2
JSG
JSC3/JSC4
USSD
UFCD
USC
UB
JSB3
LMB
LML
HCM
HCA
LBC
CAC4
UCAC2
CAC-N
UCAC-N
RCS2
RCC2
PCC
SHC
MCP
GLC
MFC
BBS
RRC
GRC
RV3*
NHS
HRL
LN
Hand
Chuk
MecHnd/Chuk
ShkAbs
FJ
FK
SpdContr
Ending

How to order switch

* Pay attention to the direction when mounting the tie rod. Refer to page 1036.

[Switch mounting: Tie rod]

T type cylinder switch

A) Switch body + mounting bracket set (=B+C+D)

CAC4 - T0H3 - 50 - 50

- 50 → Stroke (Item Ⓔ on page 1032)
- 50 → Bore size (Item Ⓑ on page 1032)
- T0H3 → Switch model No. (Item Ⓗ on page 1032)

B) Switch body only

SW - T0H3

- T0H3 → Switch model No. (Item Ⓗ on page 1032)

C) Mounting bracket kit

CAC4 - T - 50

- 50 → Bore size (Item Ⓑ on page 1032)

D) Mounting tie rod kit

UCAC2 - 50 - TIE - ROD - KIT - 50

- 50 → Bore size (Item Ⓑ on page 1032)
- 50 → Stroke (Item Ⓔ on page 1032)

Strong magnetic field proof cylinder switch

● H type cylinder switch

A) Switch body + mounting bracket set (=B+C+D)

CAC4-L2 - H03 - 50 - 50

- 50 → Stroke (Item Ⓔ on page 1032)
- 50 → Bore size (Item Ⓑ on page 1032)
- H03 → Switch model No. (Item Ⓗ on page 1032)

B) Switch body only

SW - H03

- H03 → Switch model No. (Item Ⓗ on page 1032)

C) Mounting bracket kit

CAC4-L2 - H - 50

- 50 → Bore size (Item Ⓑ on page 1032)

D) Mounting tie rod kit

UCAC2 - 50 - TIE - ROD - KIT - 50

- 50 → Bore size (Item Ⓑ on page 1032)
- 50 → Stroke (Item Ⓔ on page 1032)

[Switch mounting: Band]

A) Switch body + mounting bracket set + band (=B+C)

CAC4 - T0H - 40 - Z

- 40 → Bore size (Item Ⓑ on page 1032)
- T0H → Switch model No. (Item Ⓖ on page 1032)

B) Switch body only

SW - T0H

- T0H → Switch model No. (Item Ⓖ on page 1032)

C) Mounting bracket set + band

CAC4 - Z - 40

- 40 → Bore size (Item Ⓑ on page 1032)

LCM
LCR
LCG
LCW
LCX
STM
STG
STS/STL
STR2
UCA2
ULK*
JSK/M2
JSG
JSC3/JSC4
USSD
UFCD
USC
UB
JSB3
LMB
LML
HCM
HCA
LBC
CAC4
UCAC2
CAC-N
UCAC-N
RCS2
RCC2
PCC
SHC
MCP
GLC
MFC
BBS
RRC
GRC
RV3*
NHS
HRL
LN
Hand
Chuk
MecHnd/Chuk
ShkAbs
FJ
FK
SpdContr
Ending

Internal structure and parts list

● With forward locking (UCAC2-F)

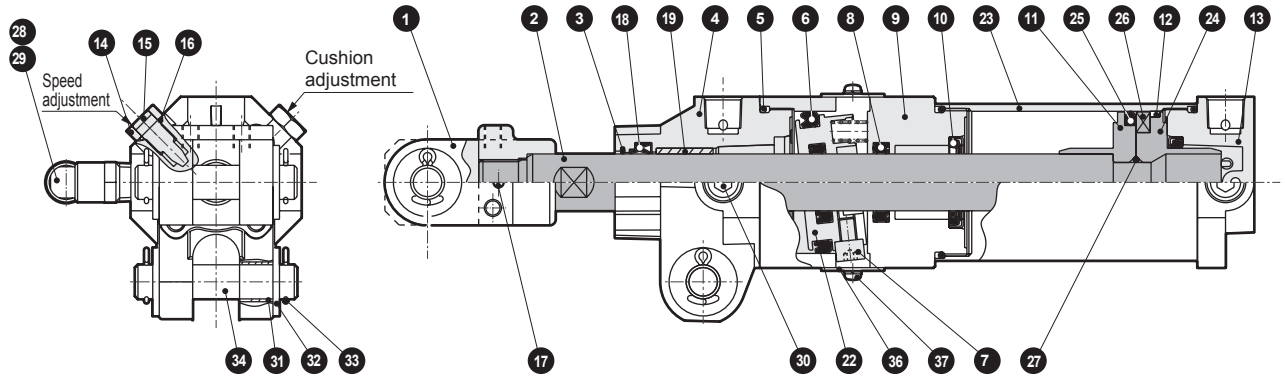

● With backward locking (UCAC2-B)

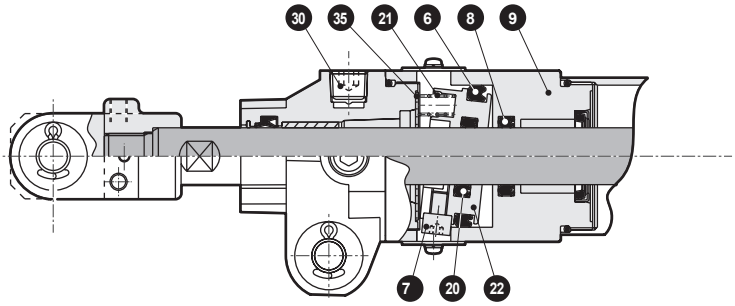

Cannot be disassembled

Note)Cushion packing ⑩ is attached to the rod side only when both sides are cushioned.

Parts list

Part No.	Part name	Material	Remarks	Part No.	Part name	Material	Remarks
1	Rod clevis	Y: Cast iron Y1: Steel	Y: Manganese phosphate Y1: Black finish	20	Lock rod packing	Nitrile rubber	
2	Piston rod	Steel	Industrial chrome plating	21	Lock spring	Steel	Black finish
3	Metal scraper	Copper alloy		22	Lock metal	Special steel	Chromate
4	Rod cover	Aluminum alloy die-casting	Chromate	23	Cylinder tube	Aluminum alloy	
5	Cylinder gasket	Nitrile rubber		24	Piston (R)	Aluminum alloy die-casting	
6	Lock piston packing	Nitrile rubber		25	Piston packing	Nitrile rubber	
7	Fulcrum nut	Steel	Chromate	26	Magnet	Plastic	
8	Rod packing	Nitrile rubber		27	Piston gasket	Nitrile rubber	
9	Intermediate cover	Aluminum alloy		28	Bypass tube		Not required with PULL side lock (B)
10	Cushion packing	Nitrile rubber, steel	Chromate	29	Push-in fitting		Not required with PULL side lock (B)
11	Piston (H)	Aluminum alloy die-casting		30	Flush plug with sealant	Steel	Black finish
12	Wear ring	Polyacetal resin		31	Bush for clevis	Tetrafluoroethylene resin, steel	
13	Head cover	Aluminum alloy die-casting		32	Flat washer	Steel	Chromate
14	Hexagon nut	Steel	Chromate	33	Split pin	Steel	Chromate
15	Needle	Copper alloy		34	Clevis pin	Steel	Black finish
16	Needle gasket	Nitrile rubber		35	Washer	Steel	Not required with PULL side lock (B) Zinc chromate
17	Spring pin	Steel	Black finish	36	Dust cover	Aluminum alloy	
18	Rod packing	Nitrile rubber		37	Small machine screw	Steel	Chromate
19	Bush	Copper alloy					

Note: Do not disassemble as it may lead to a decrease in holding force.

Dimensions

● Without rod eye

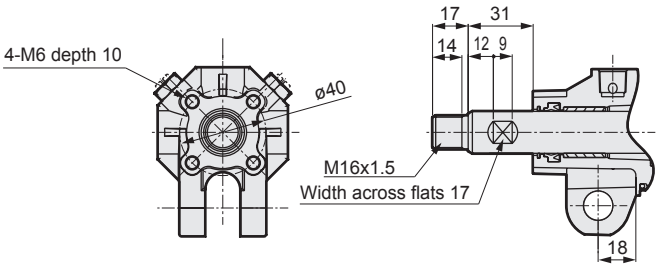

● Axial foot

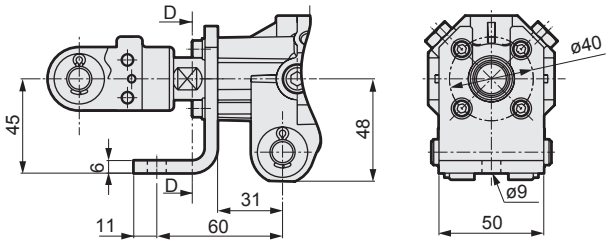

D-D arrow view

● With forward locking (UCAC2-F)

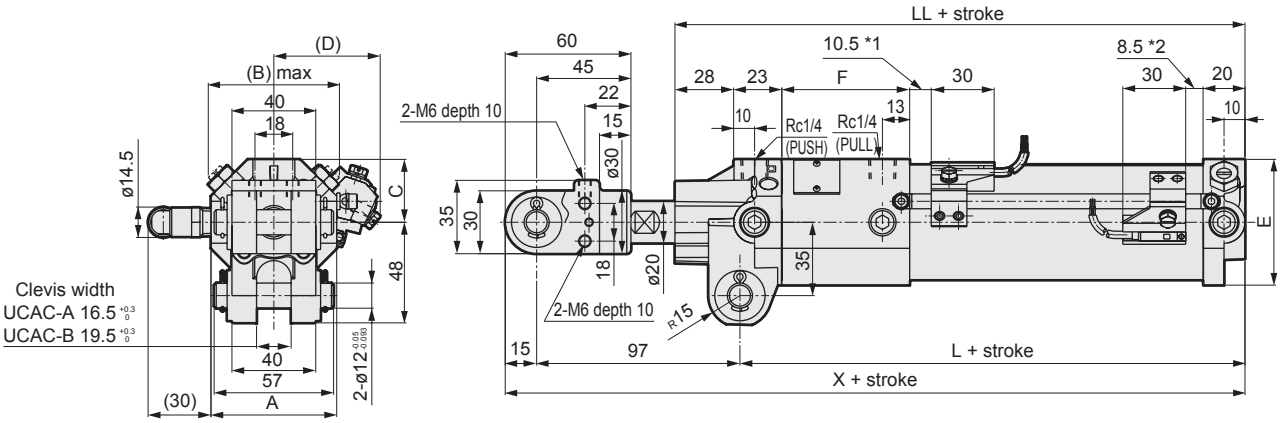

● With backward locking (UCAC2-B)

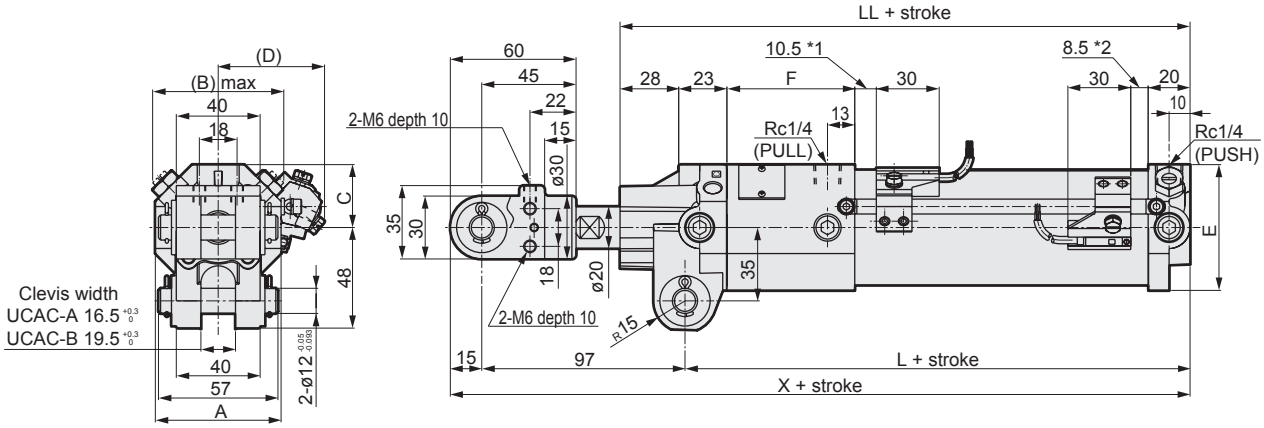

Code / Bore size (mm)	A	(B)	C	(D)	E	F	L	LL	X
ø50	60	63	30	50	60	61	141	172	253
ø63	70	66	35	56	70	63	143	174	255

*1: 5.5 for switch T8H/V and 13.5 for switch T2/3W
*2: 3.5 for switch T8H/V and 11.5 for switch T2/3W

LCM
LCR
LCG
LCW
LCX
STM
STG
STS/STL
STR2
UCA2
ULK*
JSK/M2
JSG
JSC3/JSC4
USSD
UFCD
USC
UB
JSB3
LMB
LML
HCM
HCA
LBC
CAC4
UCAC2
CAC-N
UCAC-N
RCS2
RCC2
PCC
SHC
MCP
GLC
MFC
BBS
RRC
GRC
RV3*
NHS
HRL
LN
Hand
Chuk
MecHnd/Chuk
ShkAbs
FJ
FK
SpdContr
Ending

Dimensions (Switch mounting: Tie rod type)

● H type switch mounting position

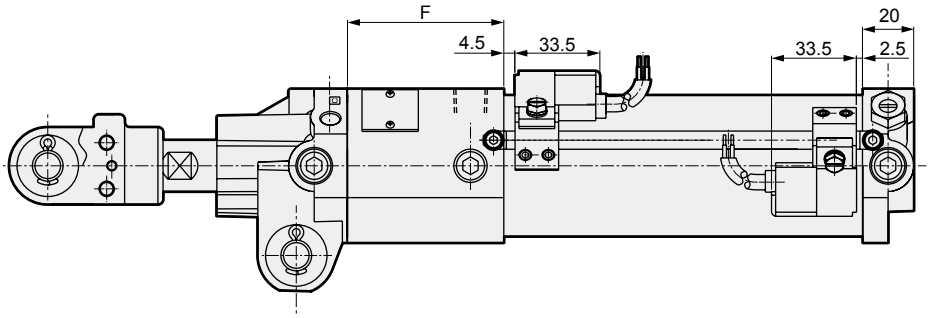

● T2YD type switch mounting position

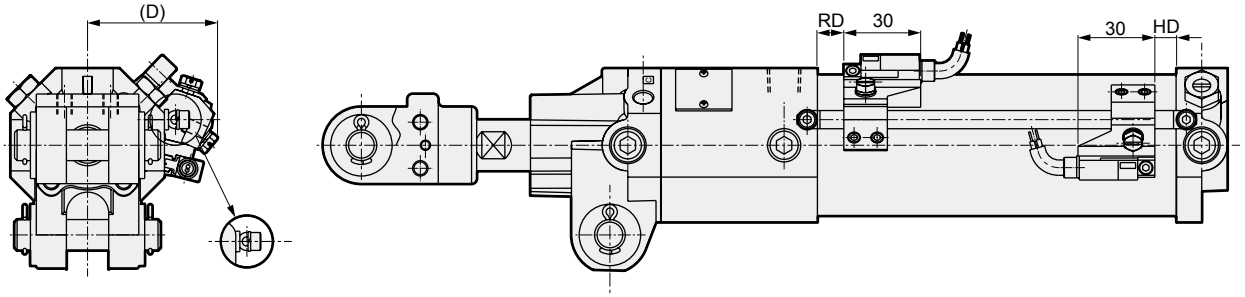

Code / Bore size (mm)	HD	RD	(D)	F
ø50	8.5	10.5	50	61
ø63	8.5	10.5	56	63

* Pay attention to the direction when mounting the tie rod.

Dimensions (switch mounting: band)

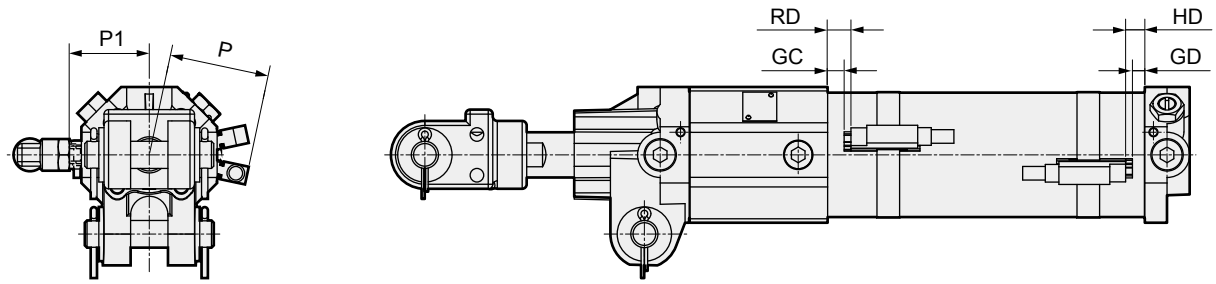

Code / Bore size (mm)	T0,T5,T2,T3						T1,T2YD,T2YDT						T2Y,T3Y,T2J					
	GC	GD	RD	HD	P	P1	GC Note	GD Note	RD	HD	P	P1	GC Note	GD Note	RD	HD	P	P1
ø50	6.5	4.5	10.5	8.5	34.5	36	-	-	10.5	8.5	45.5	36	-	-	10.5	8.5	40	36
ø63	6.5	4.5	10.5	8.5	41	42.5	-	-	10.5	8.5	52	42.5	-	-	10.5	8.5	46.5	42.5

Code / Bore size (mm)	T8						T2W,T3W					
	GC Note	GD Note	RD	HD	P	P1	GC	GD	RD	HD	P	P1
ø50	-	-	5.5	3.5	40	36	9.5	7.5	13.5	11.5	34.5	36
ø63	-	-	5.5	3.5	46.5	42.5	9.5	7.5	13.5	11.5	41	42.5

Note: Because the rail and the end face of the switch are on the same surface, the dimensions of GC and GD will be the same as those of RD and HD.

Dimensions

● Clamp bracket dimensions

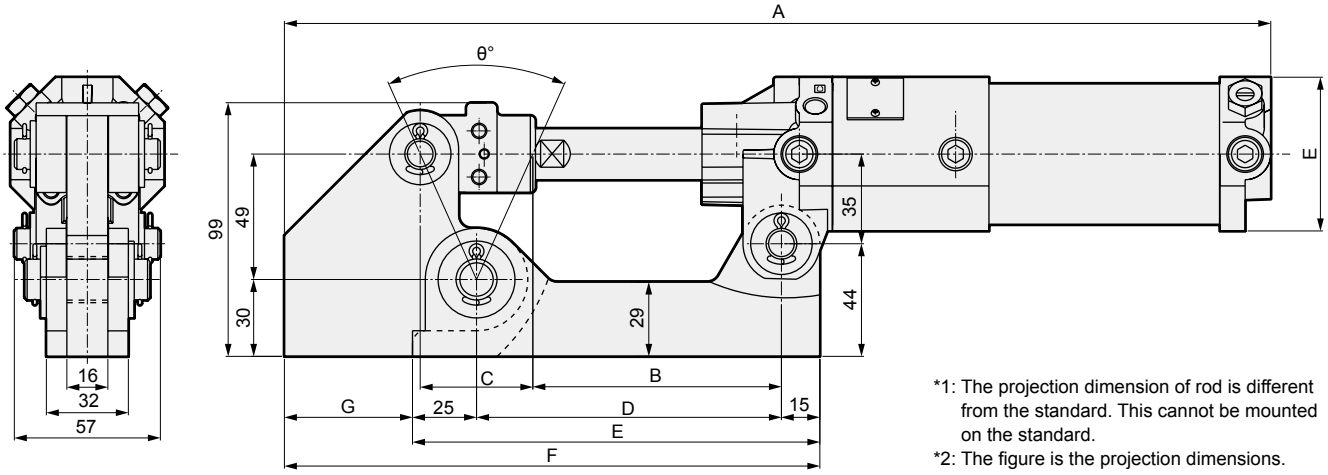

*1: The projection dimension of rod is different from the standard. This cannot be mounted on the standard.
*2: The figure is the projection dimensions. Dimension B represents the center position of the rod eye pin when the rod is retracted.
*3: Dimensions with bellows are the same.
*4: This product is mounted by welding.

Code / Model No.	Stroke length	A	B	C	D	E	F	G	θ°
UCAC2-A-50*-Q	50	387	97	44	119	159	209	50	48
UCAC2-A-75*-Q	75	435	107	70	142	182	232	50	71
UCAC2-A-100*-Q	100	478	115	90	160	200	250	50	85
UCAC2-A-125*-Q	125	531	128	120	188	228	278	50	101
UCAC2-A-150*-Q	150	576	128	140	198	238	298	60	110

LCM
LCR
LCG
LCW
LCX
STM
STG
STS/STL
STR2
UCA2
ULK*
JSK/M2
JSG
JSC3/JSC4
USSD
UFCD
USC
UB
JSB3
LMB
LML
HCM
HCA
LBC
CAC4
UCAC2
CAC-N
UCAC-N
RCS2
RCC2
PCC
SHC
MCP
GLC
MFC
BBS
RRC
GRC
RV3*
NHS
HRL
LN
Hand
Chuk
MecHnd/Chuk
ShkAbs
FJ
FK
SpdContr
Ending

Accessory dimensions

● Rod eye dimensions

Material:Steel Black finish

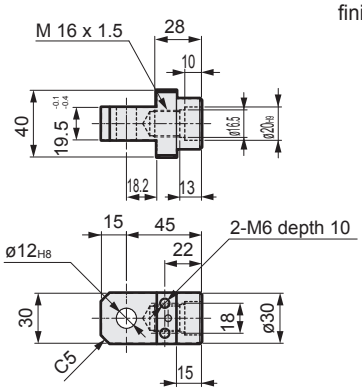

* Spring pin is attached.

Model No.	A	Applicable clamp	Weight (kg)
CAC4-IB	$19.5^{-0.1-}_{0.4}$	UCAC2-A, UCAC2-B	0.27

● Rod clevis Cast iron (Y) dimensions

Material: Manganese cast iron phosphate

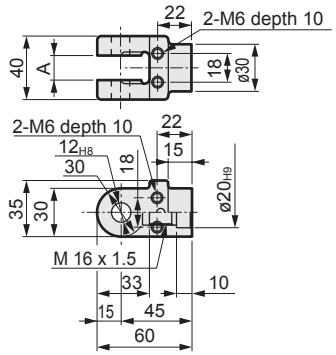

* A pin, split pin, spring pin and a plain washer are attached.

Model No.	A	Applicable clamp	Weight (kg)
CAC4-YA	$16.5^{+0.3}_{0}$	UCAC2-A	0.37
CAC4-YB	$19.5^{+0.3}_{0}$	UCAC2-B	0.37

● Rod clevis Steel (Y1) dimensions
For ø40 to ø63

Material:Steel Black finish

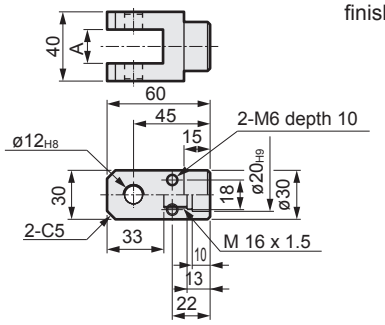

* A pin, split pin, spring pin and a plain washer are attached.

Model No.	A	Applicable clamp	Weight (kg)
CAC4-Y1A	$16.5^{+0.3}_{0}$	UCAC2-A	0.37
CAC4-Y1B	$19.5^{+0.3}_{0}$	UCAC2-B	0.37

● clevis pin dimensions

Material:Steel Zinc chromate treatment

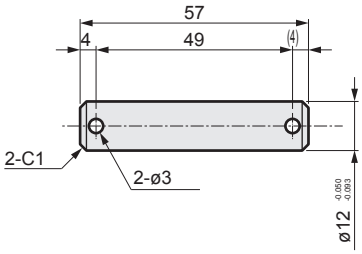

* A split pin and flat washer are attached.

Model No.	Applicable clamp	Weight (kg)
CAC4-P	UCAC2-A, UCAC2-B	0.05

● Limit switch mounting base dimensions

Material: Steel, black finish

● Dog bracket dimensions

Material: Steel, black finish

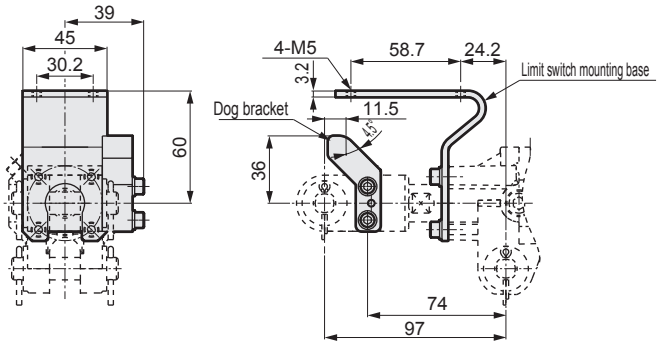

● Use WLH2 limit switch [OMRON] or equivalent.

Model No.	Part name	Applicable clamp	Weight (kg)
CAC4-L	Limit switch mounting base	UCAC2-A, UCAC2-B	0.18
CAC4-D	Dog bracket		0.08

Pneumatic components

Safety Precautions

Be sure to read this section before use.

Refer to Intro Page 73 for general information of the cylinder, and to Intro Page 80 for general information of the cylinder switch.

Product-specific cautions: Clamp cylinder with position locking UCAC2 Series

Design/selection

⚠ CAUTION

■ Basic circuit diagram

The built-in metering valve eliminates the need to install a speed controller for speed control. However, both the meter-in and meter-out states are metered, and both forward and backward speeds will change with only one needle adjusted. To control the forward and backward speeds individually, a speed controller must be installed.

● Forward locking F type

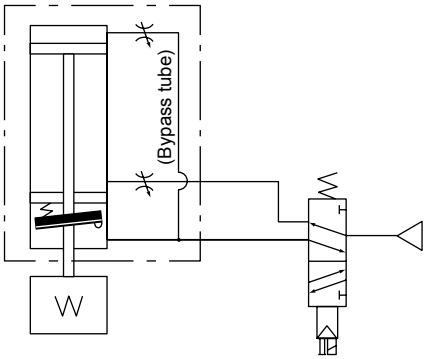

● Backward locking B type

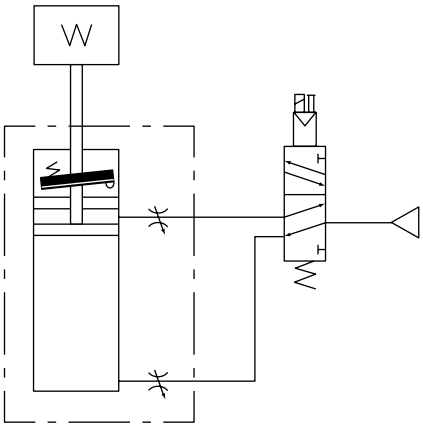

Using the emergency stop will move the cylinder backward in a forward locking and forward in a backward locking, returning it to the original position.
(When there is no residual pressure, the cylinder stops at that point.)

■ The piping port position of UCAC2 can be changed in the same way as the CAC4 Series. Be sure not to use the incorrect pressure port when doing so.

● When the port position is on the right side
(Lock direction F1 is on the right as standard)

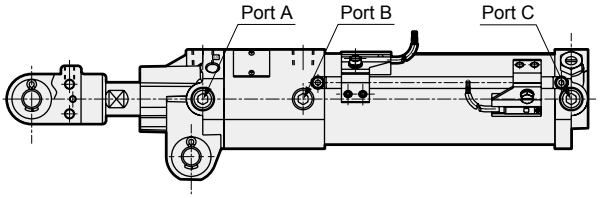

Port / Lock direction	Port A	Port B	Port C
Forward locking F type *1	PUSH port	PULL port	Plug
Backward locking B type	Plug	PULL port	PUSH port

*1: As the F2 lock direction has a bypass tube, the port cannot be placed on the right side.

● When the port position is on the left side

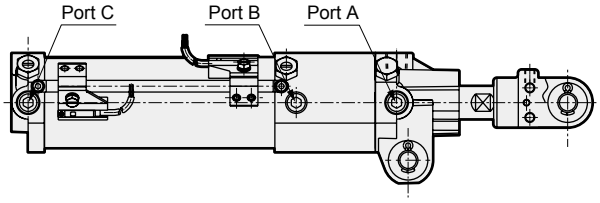

Port / Lock direction	Port A	Port B	Port C
Forward locking F type *1	PUSH port	PULL port	Plug
Backward locking B type	Plug	PULL port	PUSH port

*1: As the F lock direction has a bypass tube, the port cannot be placed on the left side.

■ Do not mistake the speed adjustment needle for the cushion needle.

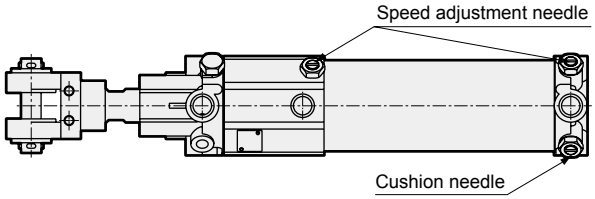

Mounting, installation and adjustment

⚠ WARNING

■ Do not disassemble the unit, as doing so may be dangerous.

⚠ CAUTION

● Flush the connecting pipes carefully before mounting to prevent dust and cutting chips from entering the cylinder.

■ Protect the piston rod sliding surface from scratches and dents.
It will cause damage to the packing, etc., and may lead to air leakage.

Use/maintenance

⚠ WARNING

■ For safety purposes, prevent the load from falling under its own weight during maintenance.

⚠ CAUTION

■ The purpose of the cushion is to absorb the piston's kinetic energy with air compressibility, preventing the piston and cover from colliding at the stroke end.
Therefore, the cushion itself does not reduce the piston speed at the stroke end.
The following table shows the kinetic energy that can be absorbed by the cushion. If the kinetic energy exceeds these values, or if bounding caused by the air compressibility is to be avoided, consider using a separate shock absorber.

$$\text{Kinetic energy (J)} = \frac{1}{2} \times \text{load weight (kg)} \times [\text{speed (m/s)}]^2$$

Cushion characteristics table

Bore size (mm)	Effective cushion length (mm)	Allowable absorbed energy (J)	
		With cushion	Without cushion
ø50	13.5	6.54	0.14
ø63	13.5	11.63	0.21

■ Do not apply torque to the rod when brakes are applied because the locking force may decrease, creating a dangerous condition.
Also, use this product in mechanisms in which the rod does not rotate.

■ Make sure to supply pressure to port B, and before unlocking, check that load is not applied to the lock mechanism.
If pressure is supplied to port A when both ports A and B are exhausted and the piston is locked, the lock may not be released or the piston rod may pop out even if the lock is released. This can be extremely hazardous.

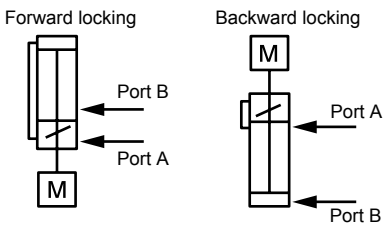

■ Keeping the cylinder with pressure applied to the lock mechanism may cause the lock to release.
Do not use 3-position closed center and 3-position P/A/B connection solenoid valves.

■ If back pressure is applied while locked, the lock may be released. Use a discrete solenoid valve, or an individual exhaust manifold.

■ Do not use with the by-pass tube disconnected, as lock response could be delayed.

■ Note that due to the structure, a 1 mm deviation may occur when stopped with the lock.

■ How to unlock manually
1. Remove the dust cover A.
2. Screw the hexagon socket bolt (length: 40 or more) fully into the screw hole M4 of the lock metal.
3. Push the hexagon socket bolt in the direction of the arrow to free the rod.

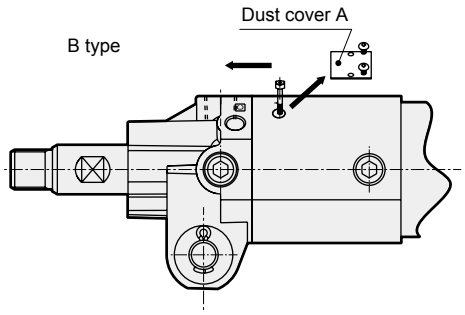

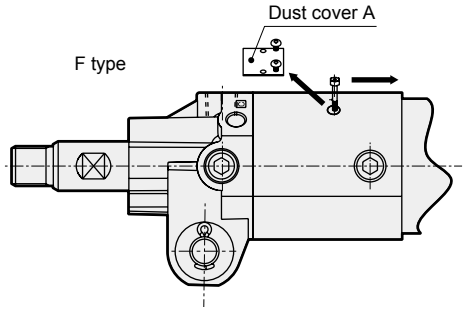

1. Common (With T type switch: band mounting)

⚠ CAUTION

■ When moving the switch position to the stroke length direction

- The 1-color display switch can be fine-tuned by ±3 mm from the default. If the adjusting range exceeds ±3 mm, or when fine-tuning the 2-color display switch, move the band position.
- Loosen the switch fixing screw, shift the switch along the rail, then tighten at the specified position.
  When using T2, T3, T0, or T5, use a flathead screwdriver (clockwork screwdriver, precision screwdriver, etc.) with a grip diameter of 5 to 6 mm, a 2.4 mm or smaller tip, and a thickness of 0.3 mm or less to tighten the screws with a tightening torque of 0.1 to 0.2 N·m.
  When using T*C, T2J, T2Y, or T3Y, tighten the screw with a tightening torque of 0.5 to 0.7 N·m.
- The switch bracket rail has a marking 4 mm from the rail end. Use as a guide to the mounting position when replacing the switch.
  Switch rail markings are set to the switch max. sensitivity position, which is the switch mounting position in the dimensions.
  The max. sensitivity position will change when the switch is changed or when the band is moved. Adjust the position accordingly in this case.

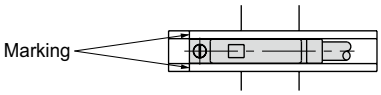

■ When moving the switch position to the circumferential direction

- Loosen the band fixing screw, shift the switch rail in the circumferential direction, then tighten at the specified position.
  The tightening torque of band fixing screw is 0.6 to 0.8 N·m.

■ Shifting the band position

- Loosen the band fixing screw, shift the switch rail and band along the cylinder tube, and tighten at the specified position.
  The tightening torque of band fixing screw is 0.6 to 0.8 N·m.

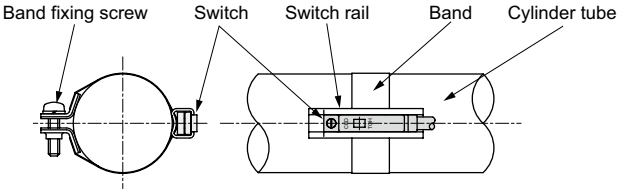

MEMO

CAC-N32/40
UCAC-N32/40

Lightweight clamp cylinder

ø32/ø40

Special

Overview

A small and lightweight clamp cylinder that contributes to reduction in the weight of welding jigs, etc.

CONTENTS

Product introduction	1044
Series variation	1045
● Double acting/single rod (CAC-N32/40)	1046
● Position locking/double acting/single rod (UCAC-N32/40)	1052
⚠ Safety precautions	1060

The cylinder switches T2YH, T2YV, T3YH, and T3YV are scheduled for end of production at the end of December 2023.

New Compact Lightweight Clamp Cylinder Helps Lighten Welding Jigs and Tools

Clamp cylinder
CAC-N Series

Bore size ø32, ø40

- The highly reliable lightweight CMK2 Series is incorporated in the cylinder.
- Reed switches, proximity switches, 2-color displays, and strong magnetic field proof switches can be mounted.

CAC-N40-150 Weight: **950** g
56% compared to conventional models

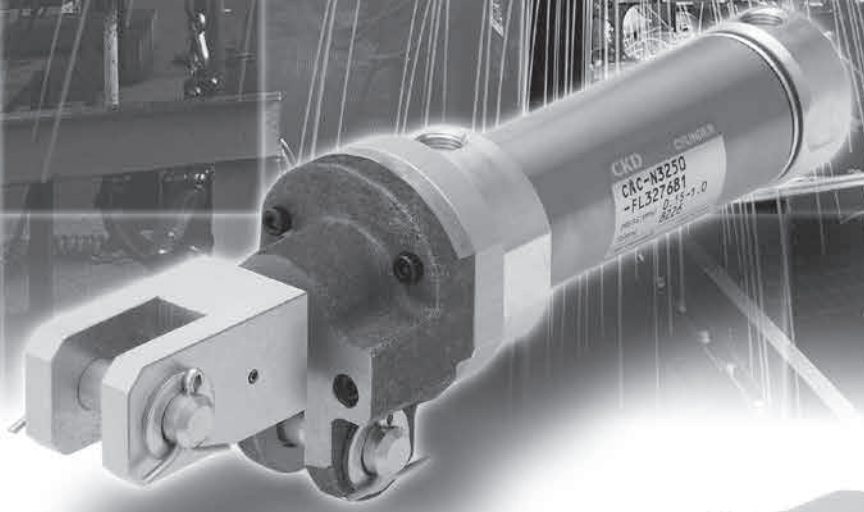

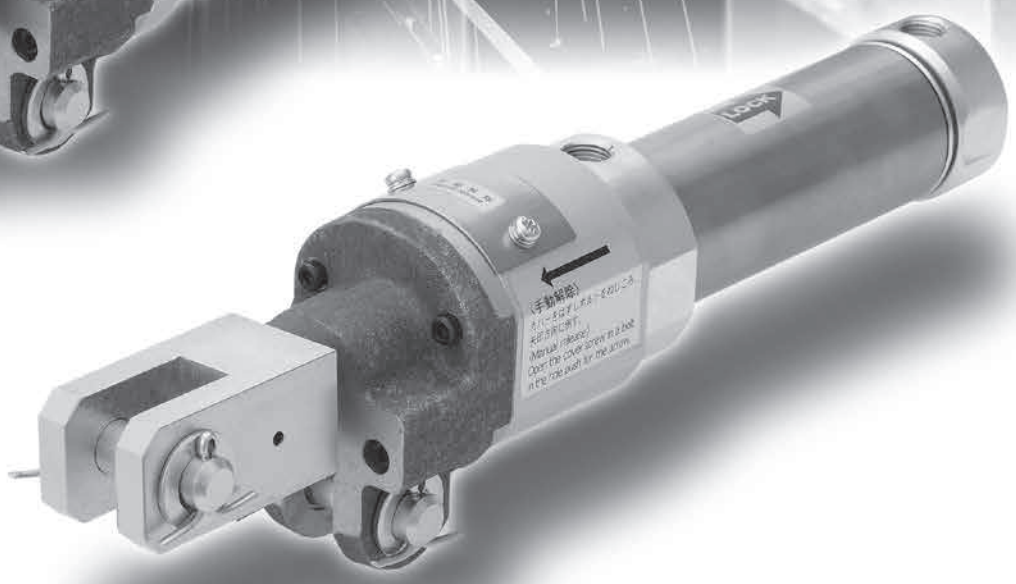

Clamp cylinder with position locking
UCAC-N Series

Bore size ø32, ø40

- Free position locking mechanism on CAC-N Series
- Locking at any position is possible, when the cylinder is stationary
- Free movement in the lock's reverse direction

Lightweight clamp cylinder/position locking and lightweight clamp cylinder
CAC-N32/40, UCAC-N32/40 Series

●: Standard ◎: Option

Variation	Model No. JIS symbol	Bore size (mm)	Stroke (mm)	Min. stroke (mm)	Max. stroke (mm)	Accessory Rod clevis Y	Switch	Page
Lightweight clamp cylinder	CAC-N32/40 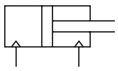	ø32/ø40	50/75/100/ 125/150	5	150	◎	◎	1046
Lightweight position locking clamp cylinder	UCAC-N32/40 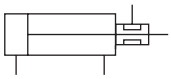	ø32/ø40	50/75/100/ 125/150	5	150	◎	◎	1052

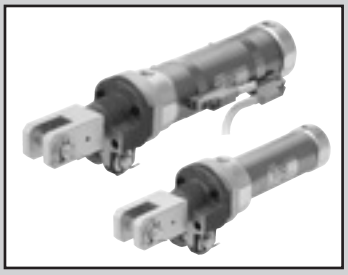

Lightweight clamp cylinder/double acting/single rod

CAC-N32/N40 Series

● Bore size: ø32, ø40

JIS symbol

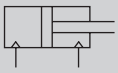

RoHS CAD

Specifications

Item		CAC-N32	CAC-N40
Bore size	mm	ø32	ø40
Actuation		Double acting	
Max. working pressure	MPa	1.0	0.7
Min. working pressure	MPa	0.15	
Proof pressure	MPa	1.6	1.05
Ambient temperature	°C	-10 to 60 (no freezing)	
Port size		Rc1/8	
Working piston speed	mm/s	50 to 500	50 to 400
Cushion		Rubber cushion	
Lubrication		Not required (use turbine oil ISO VS32 if necessary for lubrication)	
Mounting		Clevis bracket	
Allowable absorbed energy J	PUSH	0.424	
	PULL	0.424	0.639

Stroke

Bore size (mm)	Standard stroke (mm)	Max. stroke (mm)	Min. stroke (mm)	Min. stroke with switch (mm)
ø32	50, 75, 100, 125, 150	150	5	10
ø40				

Cylinder weight

(Unit: kg)

Bore size (mm)	Product weight per 0 mm stroke	Additional weight per 100 mm stroke	Weight per switch	Switch rail + band weight (per switch)	Weight of mounting bracket (tie rod mounting)	Weight of tie rod at 0 mm stroke	Additional weight of tie rod per S = 10 mm
ø32	0.45	0.15	Refer to the weight in the switch specifications on the next page.	0.009	0.021	0.019	0.003
ø40	0.53	0.17					

(Example) Product weight of CAC-N40-50-TOH-R

- Product weight at 0mm stroke 0.53kg
- Additional weight at 50mm stroke 0.17 x $\frac{50}{100}$ = 0.085kg
- Weight of TOH switch 0.018kg
- Weight of switch rail + 1 band 0.009kg
- Product weight 0.53+0.085+0.018+0.009=0.642kg

LCM
LCR
LCG
LCW
LCX
STM
STG
STS/STL
STR2
UCA2
ULK*
JSK/M2
JSG
JSC3/JSC4
USSD
UFCD
USC
UB
JSB3
LMB
LML
HCM
HCA
LBC
CAC4
UCAC2
CAC-N
UCAC-N
RCS2
RCC2
PCC
SHC
MCP
GLC
MFC
BBS
RRC
GRC
RV3*
NHS
HRL
LN
Hand
Chuk
MecHnd/Chuk
ShkAbs
FJ
FK
SpdContr
Ending

Switch specifications

● 1-color/2-color LED

Item	Proximity 2-wire			Proximity 3-wire			Reed 2-wire						
	T1H/T1V	T2H/T2V/ T2JH/ T2JV	T2YH/ T2YV	T3H/ T3V	T3PH/ T3PV	T3YH/ T3YV	TOH/TOV		T5H/T5V		T8H/T8V		
Applications	For programmable controller, relay, compact solenoid valve	Dedicated for programmable controller		For programmable controller, relay			For programmable controller, relay		For programmable controller, relay, IC circuit (without indicator lamp), serial connection		For programmable controller, relay		
Output method	-			NPN output	PNP output	NPN output	-						
Power supply voltage	-			10 to 28 VDC			-						
Load voltage	85 to 265 VAC	10 to 30 VDC		30 VDC or less			12/24 VDC	110 VAC	5/12/24 VDC	110 VAC	12/24 VDC	110 VAC	220 VAC
Load current	5 to 100 mA	5 to 20 mA (*3)		100 mA or less		50 mA or less	5 to 50 mA	7 to 20 mA	50 mA or less	20 mA or less	5 to 50 mA	7 to 20 mA	7 to 10 mA
Indicator	LED (Lit when ON)	LED (Lit when ON)	Red/green LED (Lit when ON)	LED (Lit when ON)	Yellow LED (Lit when ON)	Red/green LED (Lit when ON)	LED (Lit when ON)		No indicator lamp		LED (Lit when ON)		
Leakage current	1 mA or less with 100 VAC 2 mA or less with 200 VAC	1 mA or less		10 μA or less			0 mA						
Weight g	1 m:33 3 m:87 5 m:142	1 m:18 3 m:49 5 m:80	1 m:33 3 m:87 5 m:142	1 m:18 3 m:49 5 m:80		1 m:33 3 m:87 5 m:142	1 m:18 3 m:49 5 m:80				1 m:33 3 m:87 5 m:142		

*1 : Refer to Ending Page 1 for detailed switch specifications and dimensions.
*2 : Switches other than the above models, such as switches with connectors, are also available. Refer to Ending Page 1.
*3 : The max. load current is 20 mA at 25°C. The current is lower than 20 mA if the operating ambient temperature around the switch is higher than 25°C. (5 to 10 mA at 60°C)

● AC magnetic field

Item	Proximity 2-wire
	T2YD, T2YDT
Applications	Dedicated for programmable controller
Indicator	Red/green LED (Lit when ON)
Load voltage	24 VDC ±10%
Load current	5 to 20 mA
Internal voltage drop	6 V or less
Leakage current	1.0 mA or less
Output delay time (*1) (Delay ON, delay OFF)	30 to 60 mS
Lead wire (*2, 3)	Oil resistant vinyl cabtyre cable ø6, 0.5 mm^2 x 2-conductor (standard 1 m)
Insulation resistance	100 MΩ and over with 500 VDC megger
Withstand voltage	No failure after 1 minute of 1,000 VAC application.
Shock resistance	980 m/s^2
Ambient temperature	-10 to +60°C
Degree of protection	JIS C0920 (water-tight), IEC Standard IP67, oil resistance
Weight g	1 m:61 3 m:166 5 m:272

*1 : Indicates the time from magnetic sensor detection of the piston magnet until switch output.
*2 : 3 m and 5 m lead wires are available as options.
*3 : Flame-resistant lead wires are available as options.
*4 : Switch for AC magnetic field cannot be used in DC magnetic field.

Theoretical thrust table

(Unit: N)

Bore size (mm)	Operating direction	Working pressure MPa									
		0.15	0.2	0.3	0.4	0.5	0.6	0.7	0.8	0.9	1.0
ø32	Push	$1.21x10^2$	$1.61x10^2$	$2.41x10^2$	$3.22x10^2$	$4.02x10^2$	$4.83x10^2$	$5.63x10^2$	$6.43x10^2$	$7.24x10^2$	$8.04x10^2$
	Pull	$1.04x10^2$	$1.38x10^2$	$2.07x10^2$	$2.76x10^2$	$3.46x10^2$	$4.15x10^2$	$4.84x10^2$	$5.53x10^2$	$6.22x10^2$	$6.91x10^2$
ø40	Push	$1.88x10^2$	$2.51x10^2$	$3.77x10^2$	$5.03x10^2$	$6.28x10^2$	$7.54x10^2$	$8.80x10^2$	-	-	-
	Pull	$1.65x10^2$	$2.21x10^2$	$3.31x10^2$	$4.41x10^2$	$5.51x10^2$	$6.62x10^2$	$7.72x10^2$	-	-	-

LCM
LCR
LCG
LCW
LCX
STM
STG
STS/STL
STR2
UCA2
ULK*
JSK/M2
JSG
JSC3/JSC4
USSD
UFCD
USC
UB
JSB3
LMB
LML
HCM
HCA
LBC
CAC4
UCAC2
CAC-N
UCAC-N
RCS2
RCC2
PCC
SHC
MCP
GLC
MFC
BBS
RRC
GRC
RV3*
NHS
HRL
LN
Hand
Chuk
MecHnd/Chuk
ShkAbs
FJ
FK
SpdContr
Ending

How to order

● Without switch (built-in magnet for switch)

CAC - N40 ◯ - 50 ——— Y

● With switch (built-in magnet for switch)

CAC - N40 ◯ - 50 - T0H - R ◯ - Y

Ⓐ Bore size

Ⓑ Port thread

Ⓒ Stroke

Ⓓ Switch model No.
* indicates the lead wire length.

Ⓔ Switch quantity

Ⓕ Switch mounting position and mounting type

Ⓖ Accessory *1

Code	Description
Ⓐ Bore size (mm)	
N32	ø32
N40	ø40

Ⓑ Port thread	
Blank	Rc thread
N	NPT thread (made to order)
G	G thread (made-to-order product)

Ⓒ Stroke (mm)

50, 75, 100, 125, 150

Ⓓ Switch model No.

Straight lead wire	L-shaped lead wire	Contact	Voltage AC	Voltage DC	Indicator	Lead wire
TOH*	**T0V***	Reed	●	●	1-color LED	2-wire
T5H*	**T5V***	Reed	●	●	No indicator lamp	2-wire
T8H*	**T8V***	Reed	●	●	1-color LED	2-wire
T1H*	**T1V***	Proximity	●		1-color LED	2-wire
T2H*	**T2V***	Proximity		●	1-color LED	2-wire
T3H*	**T3V***	Proximity		●	1-color LED	3-wire
T3PH*	**T3PV***	Proximity		●	1-color LED	3-wire
T2YH*	**T2YV***	Proximity		●	2-color LED	2-wire
T3YH*	**T3YV***	Proximity		●	2-color LED	3-wire
T2YD*	**-**	Proximity		●	2-color LED AC magnetic field	2-wire
T2YDT*	**-**	Proximity		●	2-color LED AC magnetic field	2-wire
T2JH*	**T2JV***	Proximity		●	1-color LED off-delay	2-wire

*** Lead wire length (m)**	
Blank	1 (standard)
3	3 (option)
5	5 (option)

Ⓔ Switch quantity	
R	1 on rod side
H	1 on head side
D	2

Ⓕ Switch mounting position and mounting type		
A	Tie rod mounting *2	
C		
Blank	Band mounting *3	

Ⓖ Accessory	
Blank	Without accessory (rod eye)
Y	Rod clevis

Precautions for model No. selection

*1 : A pin, a split pin and a plain washer are attached with Y.
*2 : When the switch model No. is not specified, the mounting method will be tie rod only.
*3 : Tie rods cannot be retrofitted on cylinders with the switch mounting position and method left blank.

[Example of model No.]

CAC-N40-50-T0H-R-Y

Model: Lightweight clamp cylinder

Ⓐ Bore size	: ø40 mm
Ⓑ Port thread	: Rc thread
Ⓒ Stroke	: 50 mm
Ⓓ Switch model No.	: : Reed switch TOH, lead wire length 1 m
Ⓔ Switch quantity	: 1 on rod side
Ⓕ Switch mounting position and mounting type	: Band mounting
Ⓖ Accessory	: Rod clevis

LCM
LCR
LCG
LCW
LCX
STM
STG
STS/STL
STR2
UCA2
ULK*
JSK/M2
JSG
JSC3/JSC4
USSD
UFCD
USC
UB
JSB3
LMB
LML
HCM
HCA
LBC
CAC4
UCAC2
CAC-N
UCAC-N
RCS2
RCC2
PCC
SHC
MCP
GLC
MFC
BBS
RRC
GRC
RV3*
NHS
HRL
LN
Hand
Chuk
MecHnd/Chuk
ShkAbs
FJ
FK
SpdContr
Ending

How to order switch

[Switch mounting: Band]

A) Switch body + mounting bracket set

CMK2 - T0H - 40

Bore size
(Item Ⓐ on page 1048)

Switch model No.
(Item Ⓓ on page 1048)

B) Switch body only

SW - T0H

Switch model No.
(Item Ⓓ on page 1048)

C) Mounting bracket set

CMK2 - T - 32

Bore size
(Item Ⓐ on page 1048)

[Switch mounting: Tie rod]

A) Switch body + mounting bracket set
(=B+C+D)

CAC-N - T0H - 50

Stroke
(Item Ⓒ on page 1048)

Switch model No.
(Item Ⓓ on page 1048)

B) Switch body only

SW - T0H

Switch model No.
(Item Ⓓ on page 1048)

C) Mounting bracket kit

CAC-N - T

D) Mounting tie rod kit

CAC-N - TIE - ROD - KIT - 50

Stroke
(Item Ⓒ on page 1048)

LCM
LCR
LCG
LCW
LCX
STM
STG
STS/STL
STR2
UCA2
ULK*
JSK/M2
JSG
JSC3/JSC4
USSD
UFCD
USC
UB
JSB3
LMB
LML
HCM
HCA
LBC
CAC4
UCAC2
CAC-N
UCAC-N
RCS2
RCC2
PCC
SHC
MCP
GLC
MFC
BBS
RRC
GRC
RV3*
NHS
HRL
LN
Hand
Chuk
MecHnd/Chuk
ShkAbs
FJ
FK
SpdContr
Ending

Internal structure and parts list

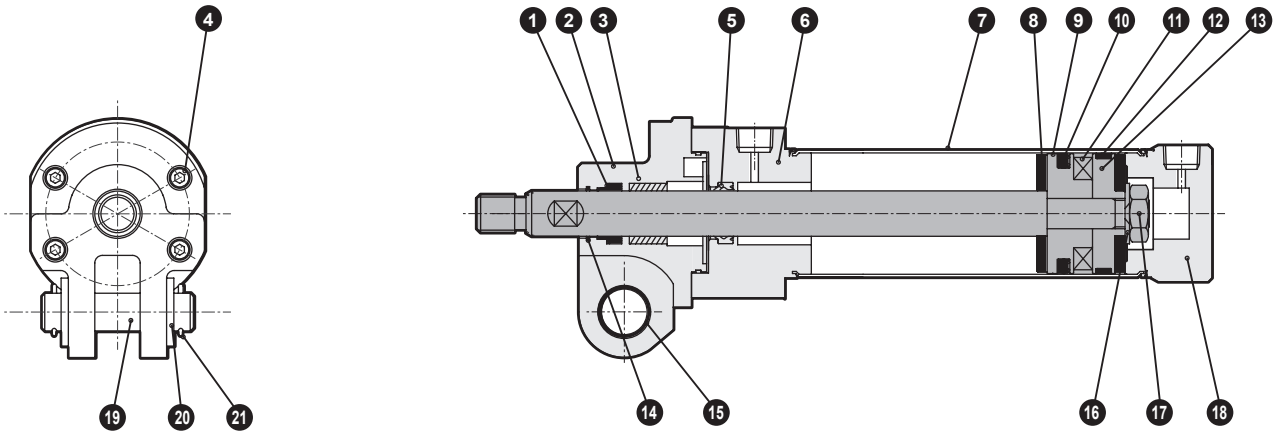

Cannot be disassembled

No.	Part name	Material	Remarks	No.	Part name	Material	Remarks
1	Scraper	Nitrile rubber		12	Wear ring	Acetal resin	
2	Front clevis	Aluminum alloy	Alumite	13	Piston B	Aluminum alloy	
3	Bush	Copper alloy		14	Metal scraper	Copper	
4	Hexagon socket head cap screw	Steel		15	Bush for clevis	Dry bearing	
5	Rod packing	Nitrile rubber		16	Plain washer	Steel	Chromate
6	Rod cover	Aluminum alloy		17	Hexagon nut	Steel	Chromate
7	Tube	Stainless steel		18	Head cover	Aluminum alloy	
8	Cushion rubber	Urethane rubber		19	Pin	Steel	Chromate
9	Piston A	Aluminum alloy		20	Plain washer	Steel	Chromate
10	Piston packing	Nitrile rubber		21	Split pin	Steel	Chromate
11	Magnet	Plastic					

Note: The cylinder is a swaging and cannot be disassembled.

Dimensions

● Switch mounting: Band

● With 1-color LED switch

Without rod eye

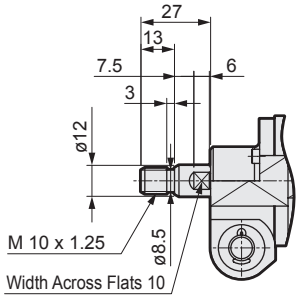

With rod clevis (Y)

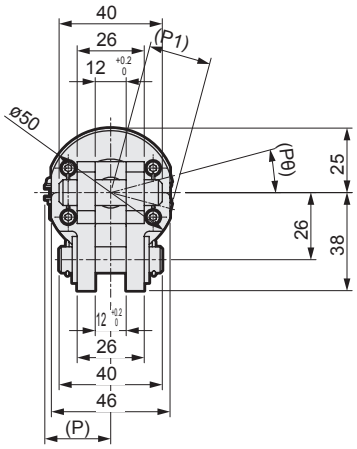

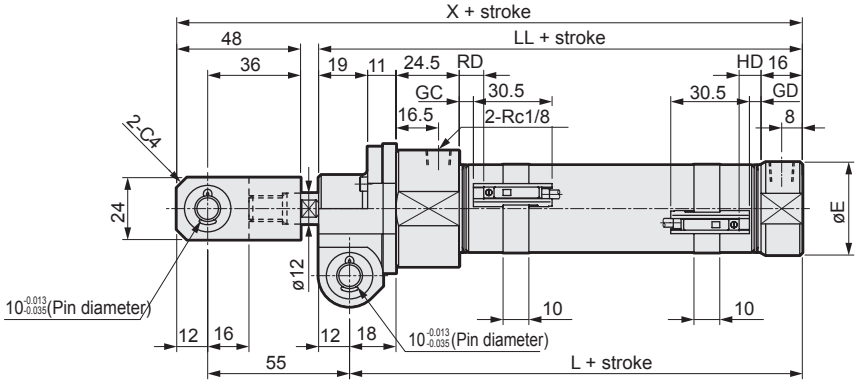

Code / Bore size	E	L	LL	X	T0,T5,T2,T3				P	P1	Pθ
					GC	GD	RD	HD			
ø32	36	95.5	107.5	162.5	5.5	4.5	9.5	8.5	25.5	24.3	15
ø40	45	99.5	111.5	166.5	7.5	6.5	11.5	10.5	29.5	28.3	12

● T1*, T8*, with 2-point display switch

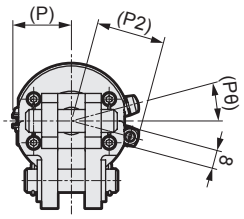

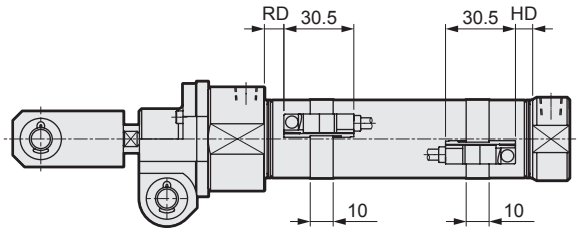

Code / Bore size	RD		HD		P	P2		Pθ
	T1,T²₃Y,T2YD,T2J	T8	T1,T²₃Y,T2YD,T2J	T8		T1,T2YD	T²₃Y,T8	
ø32	8.5	3.5	7.5	2.5	25.5	35.5	30.1	15
ø40	10.5	5.5	9.5	4.5	29.5	39.5	34.1	12

● Switch mounting: Tie rod

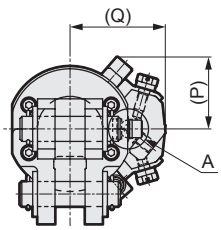

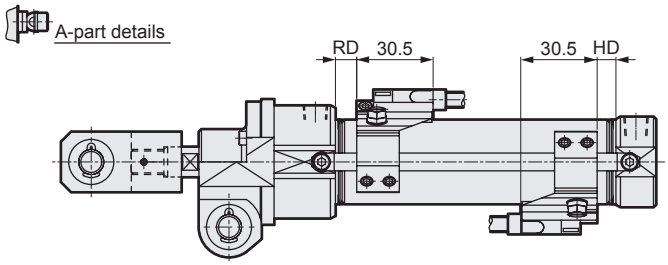

Code / Bore size	(Q)	(P)	RD	HD
ø32	(38)	(29)	8.5	7.5
ø40	(42)	(29)	10.5	9.5

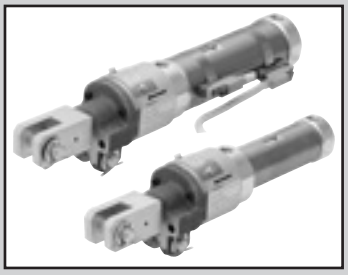

Lightweight position locking clamp cylinder

UCAC-N32/N40 Series

● Bore size: ø32, ø40

JIS symbol

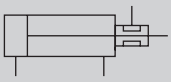

RoHS CAD

Specifications

Item		UCAC-N32	UCAC-N40
Bore size	mm	ø32	ø40
Actuation		Double acting	
Max. working pressure	MPa	1.0 (≈150 psi, 10 bar)	0.7 (≈100 psi, 7 bar)
Min. working pressure	MPa	0.25 (≈36 psi, 2.5 bar)	
Proof pressure	MPa	1.6 (≈230 psi, 16 bar)	1.05 (≈150 psi, 10.5 bar)
Ambient temperature	°C	-10 (14°F) to 60 (140°F) (no freezing)	
Port size		Rc1/8	
Working piston speed	mm/s	50 to 500	50 to 400
Cushion		Rubber cushion	
Lubrication		Not required (use turbine oil ISO VS32 if necessary for lubrication)	
Mounting		Clevis bracket	
Position locking mechanism		Forward/backward locking	
Lock force	N	631	
Allowable absorbed energy J	PUSH	0.424	
	PULL	0.424	0.639

Stroke

Bore size (mm)	Standard stroke (mm)	Max. stroke (mm)	Min. stroke (mm)	Min. stroke with switch (mm)
ø32	50, 75, 100, 125, 150	150	5	10
ø40				

Switch specifications

● 1-color/2-color LED/for AC magnetic field

Item	Proximity 2-wire			Proximity 3-wire			Reed 2-wire							Proximity 2-wire
	T1H/T1V	T2H/T2V	T2YH/T2YV	T3H/T3V	T3PH/T3PV	T3YH/T3YV	TOH/TOV		T5H/T5V		T8H/T8V			T2YD(*4) T2YDT
Applications	For programmable controller, relay, compact solenoid valve	Dedicated for programmable controller		For programmable controller, relay			For programmable controller, relay		For programmable controller, relay, IC circuit (no indicator lamp), serial connection		For programmable controller, relay			Dedicated for programmable controller
Output method	-			NPN output	PNP output	NPN output	-							
Pwr. supp. V.	-			10 to 28 VDC			-							
Load voltage	85 to 265 VAC	10 to 30 VDC		30 VDC or less			12/24 VDC	110 VAC	5/12/24 VDC	110 VAC	12/24 VDC	110 VAC	220 VAC	24 VDC ±10%
Load current	5 to 100 mA	5 to 20 mA (*3)		100 mA or less		50 mA or less	5 to 50 mA	7 to 20 mA	50 mA or less	≤20 mA	5 to 50 mA	7 to 20 mA	7 to 10 mA	5 to 20 mA
Indicator	LED (Lit when ON)	LED (Lit when ON)	Red/green LED (Lit when ON)	LED (Lit when ON)	Yellow LED (Lit when ON)	Red/green LED (Lit when ON)	LED (Lit when ON)		No indicator lamp		LED (Lit when ON)			Red/green LED (Lit when ON)
Leakage current	1 mA or less with 100 VAC 2 mA or less with 200 VAC	1 mA or less		10 μA or less			0 mA							1 mA or less
Weight g	1 m:33 3 m:87 5 m:142	1 m:18 3 m:49 5 m:80	1 m:33 3 m:87 5 m:142	1 m:18 3 m:49 5 m:80		1 m:33 3 m:87 5 m:142	1 m:18 3 m:49 5 m:80				1 m:33 3 m:87 5 m:142			1 m:61 3 m:166 5 m:272

*1 : Refer to Ending Page 1 for detailed switch specifications and dimensions.
*2 : Switches other than the above models, such as switches with connectors, are also available. Refer to Ending Page 1.
*3 : The max. load current is 20 mA at 25°C. The current is lower than 20 mA if the operating ambient temperature around the switch is higher than 25°C. (5 to 10 mA at 60°C)
*4 : AC magnetic field proof switch (T2YD/T2YDT) cannot be used in DC magnetic fields.

Cylinder weight

(Unit: kg)

Bore size (mm)		Product weight per 0 mm stroke	Additional weight per 100 mm stroke	Weight per switch	Switch rail + band weight (per switch)	Weight of mounting bracket (tie rod mounting)	Weight of tie rod at 0 mm stroke	Additional weight of tie rod per S = 10 mm
ø32	Forward locking: F	0.71	0.15	Refer to the weight in the switch specifications on the previous page.	0.009	0.024	0.019	0.003
	Backward locking: B	0.65						
ø40	Forward locking: F	0.78	0.17					
	Backward locking: B	0.72						

(Example) Product weight of UCAC-N32-50-B-TOH-D

- Product weight at 0 mm stroke (backward locking: B) ..... 0.65 kg
- Additional weight per 50 mm stroke ..... $0.15 \times \frac{50}{100} = 0.075$ kg
- Weight of 2 TOH switches ..... 0.018x2=0.036 kg
- Weight of switch rail + 2 bands ..... 0.009x2=0.018 kg
- Product weight ..... 0.65+0.075+0.036+0.018=0.779 kg

Theoretical thrust table

(Unit: N)

Bore size (mm)	Operating direction	Working pressure MPa								
		0.25	0.3	0.4	0.5	0.6	0.7	0.8	0.9	1.0
ø32	Push	2.01×10^2	2.41×10^2	3.22×10^2	4.02×10^2	4.83×10^2	5.63×10^2	6.43×10^2	7.24×10^2	8.04×10^2
	Pull	1.73×10^2	2.07×10^2	2.76×10^2	3.46×10^2	4.15×10^2	4.84×10^2	5.53×10^2	6.22×10^2	6.91×10^2
ø40	Push	3.14×10^2	3.77×10^2	5.03×10^2	6.28×10^2	7.54×10^2	8.80×10^2	-	-	-
	Pull	2.76×10^2	3.31×10^2	4.41×10^2	5.51×10^2	6.62×10^2	7.72×10^2	-	-	-

How to order

● Without switch (built-in magnet for switch)

UCAC - N32 - 50 - B ———— Y

● With switch (built-in magnet for switch)

UCAC - N32 - 50 - B - T0H - D ○ - Y

Ⓐ Bore size

Ⓑ Stroke

Ⓒ Lock direction

Ⓓ Switch model No.
* indicates the lead wire length.

Ⓔ Switch quantity

Ⓕ Switch mounting position and mounting type

Ⓖ Accessory *1

Code	Item
Ⓐ Bore size (mm)	
N32	ø32
N40	ø40
Ⓑ Stroke (mm)	
50	50
75	75
100	100
125	125
150	150
Ⓒ Lock direction	
F	Forward locking
B	Backward locking

Ⓓ Switch model No.

Straight lead wire	L-shaped lead wire	Contact	Voltage AC	Voltage DC	Indicator	Lead wire
TOH*	**T0V***	Reed	●	●	1-color LED	2-wire
T5H*	**T5V***	Reed	●	●	No indicator lamp	2-wire
T8H*	**T8V***	Reed	●	●	1-color LED	2-wire
T1H*	**T1V***	Proximity	●		1-color LED	2-wire
T2H*	**T2V***	Proximity		●	1-color LED	2-wire
T3H*	**T3V***	Proximity		●	1-color LED	3-wire
T3PH*	**T3PV***	Proximity		●	1-color LED	3-wire
T2YH*	**T2YV***	Proximity		●	2-color LED	2-wire
T3YH*	**T3YV***	Proximity		●	2-color LED	3-wire
T2YD*	**-**	Proximity		●	2-color LED AC magnetic field	2-wire
T2YDT*	**-**	Proximity		●	2-color LED AC magnetic field	2-wire
T2JH*	**T2JV***	Proximity		●	1-color LED off-delay	2-wire

*** Lead wire length (m)**	
Blank	1 (standard)
3	3 (option)
5	5 (option)
Ⓔ Switch quantity	
R	1 on rod side
H	1 on head side
D	2
Ⓕ Switch mounting position and mounting type	
A	Tie rod mounting *2
C	Tie rod mounting *2
Blank	Band mounting *3
Ⓖ Accessory	
Blank	Without accessory (rod eye)
Y	Rod clevis (pin, split pin and plain washer attached)

Precautions for model No. selection

*1: A pin, split pin, and plain washer are attached with Y.
*2: When the switch model No. is not specified, the mounting method will be tie rod only.
*3: Tie rods cannot be retrofitted on cylinders with the switch mounting position and method left blank.

[Example of model No.]

UCAC-N32-50-B-T0H-D-Y

Model: Lightweight position locking clamp cylinder Double acting

Ⓐ Bore size	: ø32 mm
Ⓑ Stroke	: 50 mm
Ⓒ Lock direction	: Backward locking
Ⓓ Switch model No.	: Reed switch TOH, lead wire length 1 m
Ⓔ Switch quantity	: 2
Ⓕ Switch mounting position and mounting type	: Band mounting
Ⓖ Accessory	: Rod clevis

How to order switch

[Switch mounting: Band]

A) Switch body + mounting bracket set

CMK2 - T0H - 32

Bore size
(Item Ⓐ on page 1054)

Switch model No.
(Item Ⓓ on page 1054)

B) Switch body only

SW - T0H3

Switch model No.
(Item Ⓓ on page 1054)

C) Mounting bracket set

CMK2 - T - 32

Bore size
(Item Ⓐ on page 1054)

[Switch mounting: Tie rod]

A) Switch body + mounting bracket set
(=B+C+D)

CAC-N - T0H - 50

Stroke
(Item Ⓑ on page 1054)

Switch model No.
(Item Ⓓ on page 1054)

B) Switch body only

SW - T0H

Switch model No.
(Item Ⓓ on page 1054)

C) Mounting bracket kit

CAC-N - T

D) Mounting tie rod kit

CAC-N - TIE - ROD - KIT - 50

Stroke
(Item Ⓑ on page 1054)

LCM
LCR
LCG
LCW
LCX
STM
STG
STS/STL
STR2
UCA2
ULK*
JSK/M2
JSG
JSC3/JSC4
USSD
UFCD
USC
UB
JSB3
LMB
LML
HCM
HCA
LBC
CAC4
UCAC2
CAC-N
UCAC-N
RCS2
RCC2
PCC
SHC
MCP
GLC
MFC
BBS
RRC
GRC
RV3*
NHS
HRL
LN
Hand
Chuk
MecHnd/Chuk
ShkAbs
FJ
FK
SpdContr
Ending

Internal structure and parts list

* The cylinder is the same as CAC-N32/N40. Refer to page 1050.

● With backward locking (UCAC-N32/N40-B)

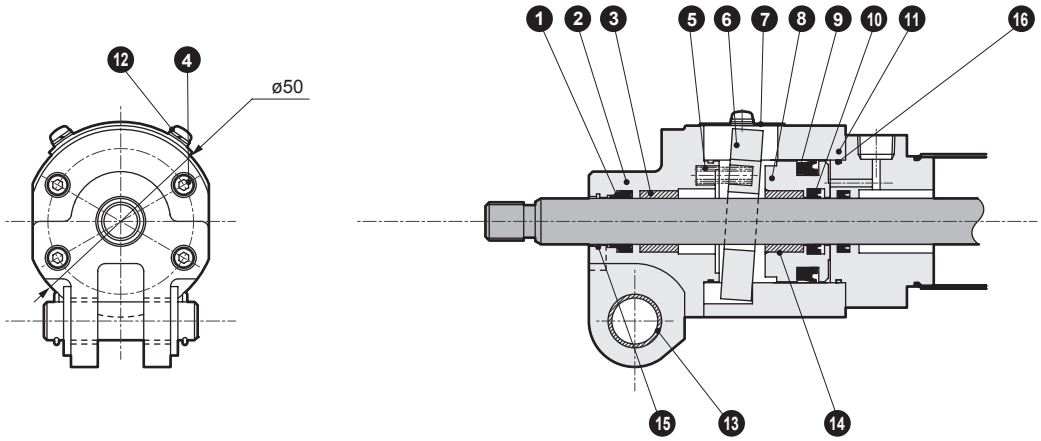

● With forward locking (UCAC-N32/N40-F)

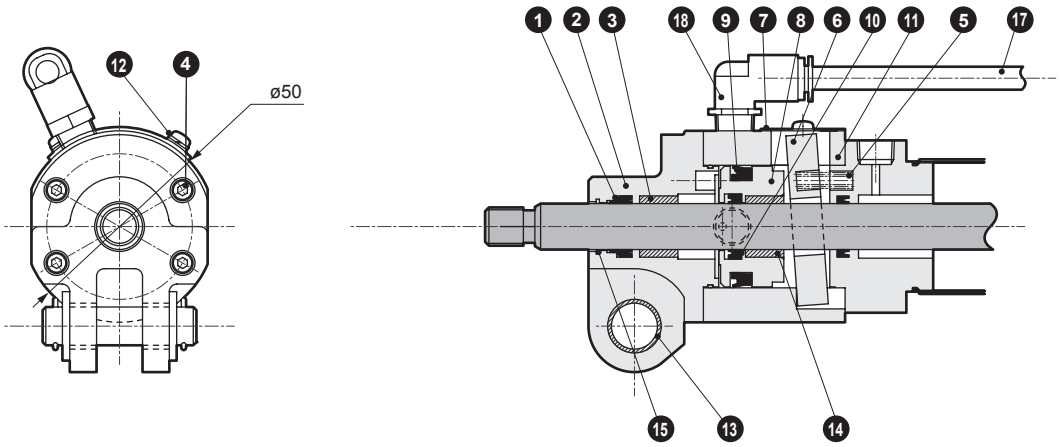

Cannot be disassembled

No.	Part name	Material	Remarks	No.	Part name	Material	Remarks
1	Scraper	Nitrile rubber		10	Lock rod packing	Nitrile rubber	
2	Rod cover	Aluminum alloy	Alumite	11	Intermediate cover	Aluminum alloy	Alumite
3	Metal	Copper alloy		12	Cross-recessed pan head machine screw	Steel	Chromate
4	Hexagon socket head cap screw	Steel		13	Bush for clevis	Oiles drymet	
5	Spring	Steel	Black finish	14	Metal	Copper alloy	
6	Lock plate	Cast iron		15	Metal scraper	Copper alloy	
7	Dust cover	Stainless steel		16	Gasket	Nitrile rubber	
8	Release piston	Aluminum alloy	Alumite	17	Bypass tube		
9	Lock piston packing	Nitrile rubber		18	Push-in fitting		

Note: The cylinder is a swaging type and cannot be disassembled.
Also, do not disassemble the lock as it may lead to a decrease in holding force.

dimensions

● Switch mounting: Band

● With 1-color LED switch

● Without rod eye

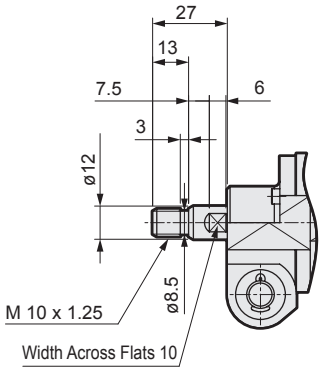

● With rod clevis (Y)

• With forward locking (UCAC-N32/N40-F)

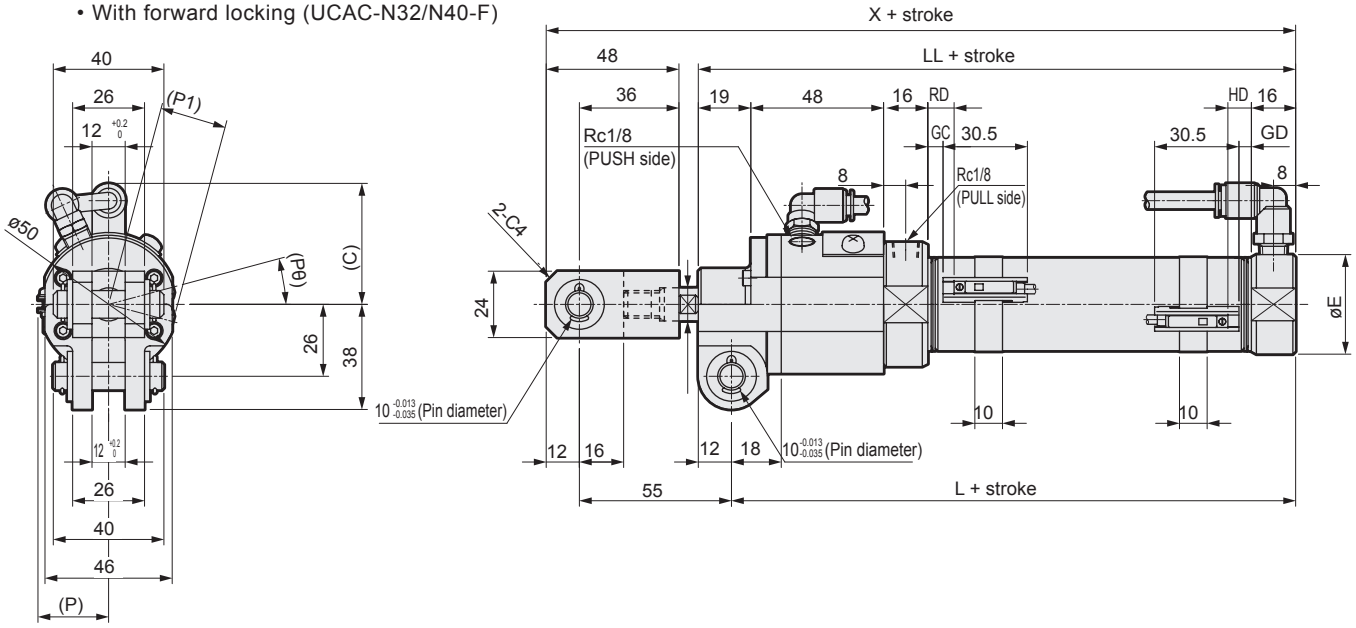

• With backward locking (UCAC-N32/N40-B)

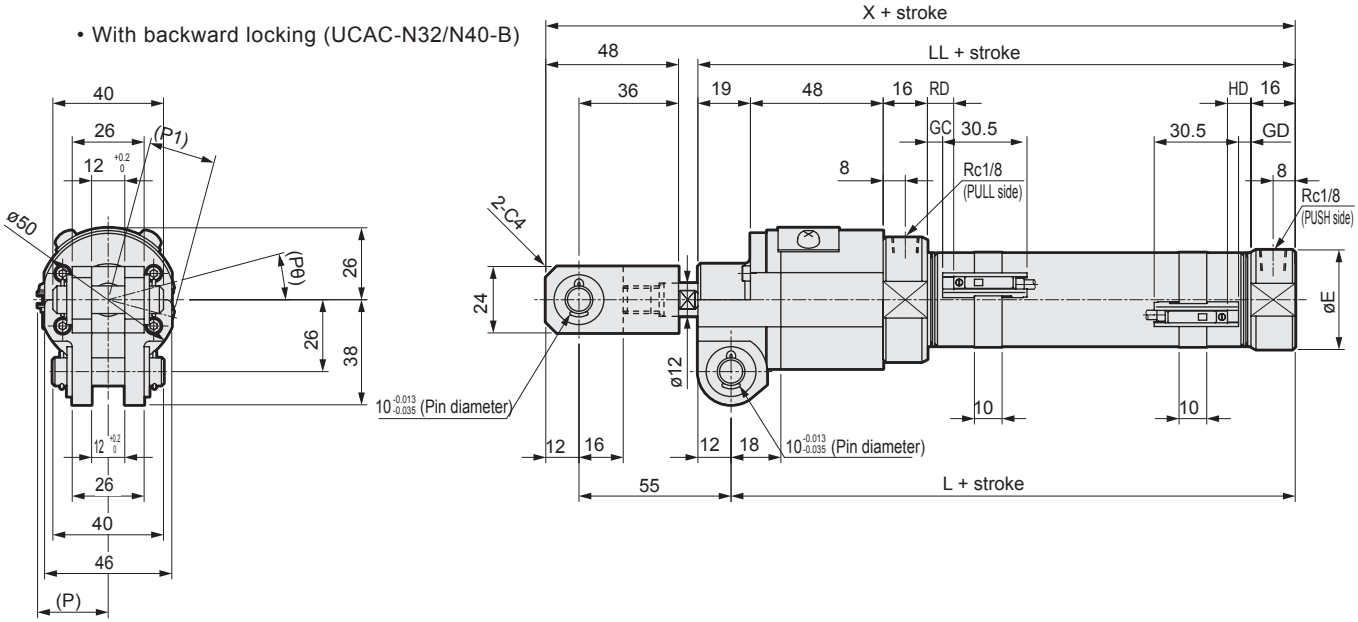

Code / Bore size	C	E	L	LL	X	T0,T5,T2,T3				P	P1	Pθ
						GC	GD	RD	HD			
ø32	44	36	124	136	191	5.5	4.5	9.5	8.5	25.5	24.3	15
ø40	49	45	128	140	195	7.5	6.5	11.5	10.5	29.5	28.3	12

LCM
LCR
LCG
LCW
LCX
STM
STG
STS/STL
STR2
UCA2
ULK*
JSK/M2
JSG
JSC3/JSC4
USSD
UFCD
USC
UB
JSB3
LMB
LML
HCM
HCA
LBC
CAC4
UCAC2
CAC-N
UCAC-N
RCS2
RCC2
PCC
SHC
MCP
GLC
MFC
BBS
RRC
GRC
RV3*
NHS
HRL
LN
Hand
Chuk
MecHnd/Chuk
ShkAbs
FJ
FK
SpdContr
Ending

Dimensions CAD

● T1*, T8*, with 2-color LED switch

• With forward locking (UCAC-N32/N40-F)

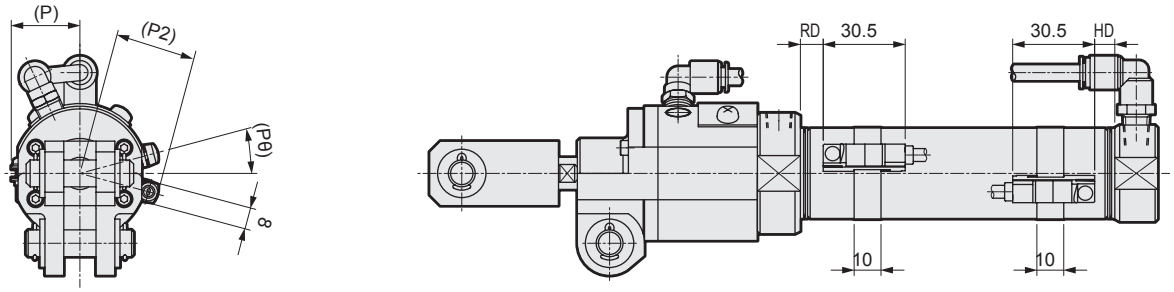

• With backward locking (UCAC-N32/N40-B)

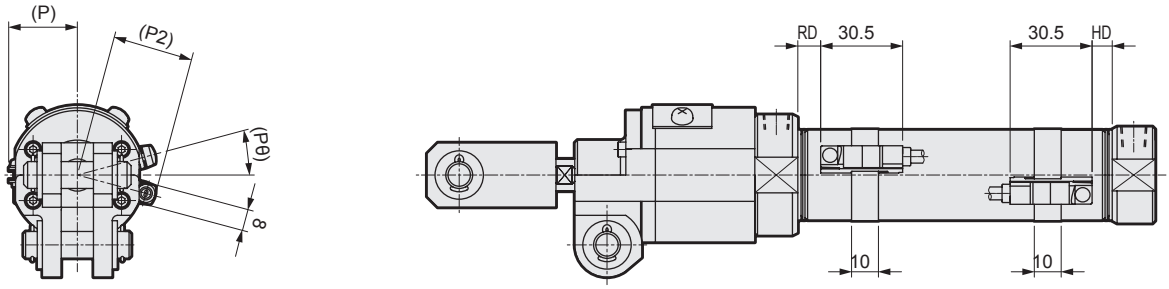

Code / Bore size	RD		HD		P	P2		Pθ
	T1, T^2_3Y, T2YD, T2J	T8	T1, T^2_3Y, T2YD, T2J	T8		T1, T2YD	T^2_3Y, T8	
ø32	8.5	3.5	7.5	2.5	25.5	35.5	30.1	15
ø40	10.5	5.5	9.5	4.5	29.5	39.5	34.1	12

● Switch mounting: Tie rod

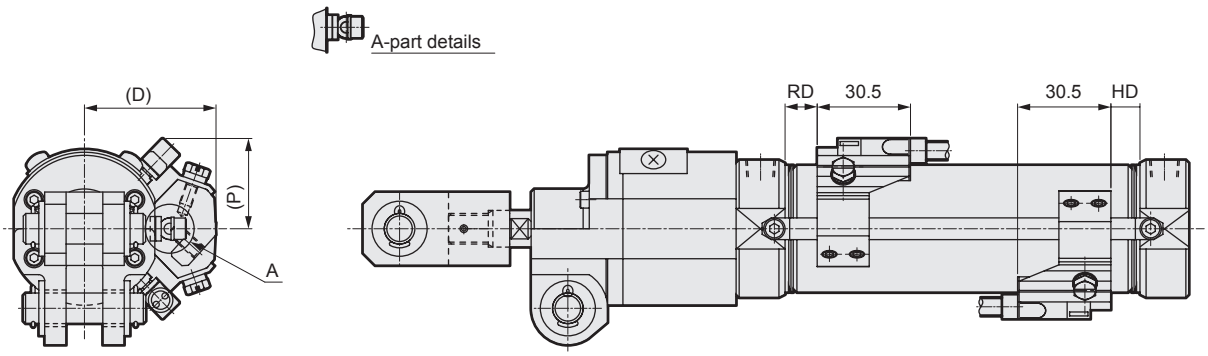

Code / Bore size	(D)	(P)	RD	HD
ø32	(38)	(29)	8.5	7.5
ø40	(43)	(30)	10.5	9.5

Accessory dimensions

● Rod clevis (Y) Material: Steel
Zinc chromate treatment

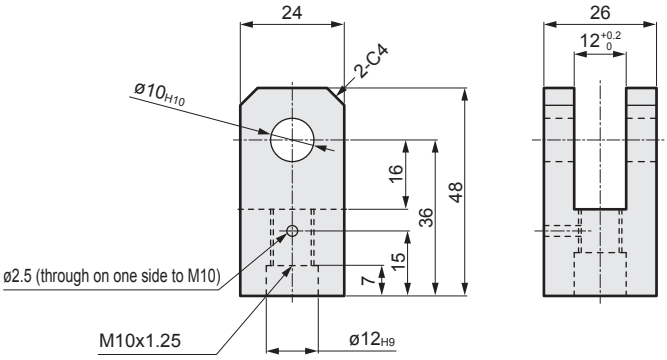

* A pin, split pin, spring pin and plain washer are attached.

Model No.	Applicable clamp	Weight (kg)
CAC-N-Y	CAC-N, UCAC-N	0.15

● Clevis pin Material: Steel
Zinc chromate treatment

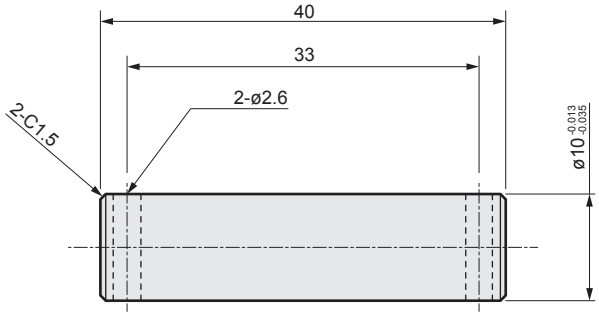

* A split pin and flat washer are attached.

Model No.	Applicable clamp	Weight (kg)
CAC-N-P	CAC-N, UCAC-N	0.02

Pneumatic components

Safety Precautions

Be sure to read this section before use.
Refer to Intro Page 73 for general information of the cylinder, and to Intro Page 80 for general information of the cylinder switch.

Product-specific cautions: Lightweight clamp cylinder with position locking UCAC-N32/N40

Design/selection

CAUTION

■ Basic circuit
To control the advance and retract speeds individually, a speed controller must be installed.

● Forward locking F type

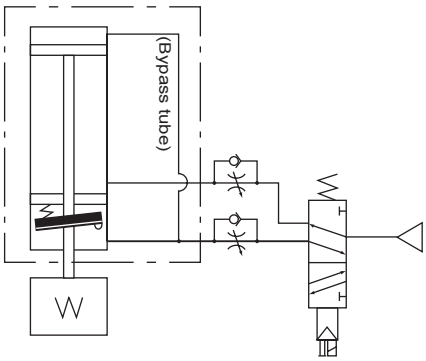

● Backward locking B type

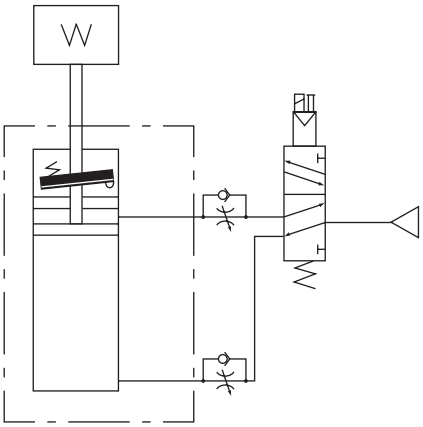

Using the emergency stop will move the cylinder backward in a forward locking type and forward in a backward locking type, returning it to the original position. (When there is no residual pressure, the cylinder stops at that point.)

Mounting, installation and adjustment

CAUTION

■ Flush the connected pipes sufficiently when mounting to prevent foreign materials or cutting chips from entering the cylinder.

■ Protect the piston rod sliding surface from scratches and dents.
It will cause damage to the packing, etc., and may lead to air leakage.

Use/maintenance

WARNING

■ For safety purposes, prevent the load from falling under its own weight during maintenance. Do not apply torque to the rod when locked because the locking force may decrease, creating a dangerous condition.
Also, use this product in mechanisms in which the rod does not rotate.

■ Make sure to supply pressure to port B , and before unlocking, check that load is not applied to the lock mechanism.
If pressure is supplied to port A when both ports A and B are exhausted and the piston is locked, the lock may not be released or the piston rod may pop out even if the lock is released. This can be extremely hazardous.

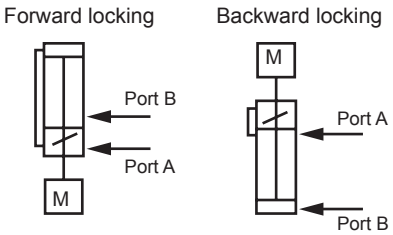

■ If the cylinder is held with pressure is applied on the locking mechanism, the lock could be released.
Do not use 3-position closed center and 3-position P/A/B connection solenoid valves.

■ If a back pressure is applied while locked, the lock may be released. Use a discrete solenoid valve for brake release, or use an individual exhaust manifold.

■ Do not use with the by-pass tube disconnected as lock response could be delayed.

■ Note that due to the structure, a 1 mm deviation may occur when stopped with the lock.

■ How to unlock manually

1. Remove the dust cover A.
2. Screw the hexagon socket bolt (length: 40 or more recommended) fully into the screw hole M4 of the lock metal.
3. Push the hexagon socket bolt in the direction of the arrow to free the rod.

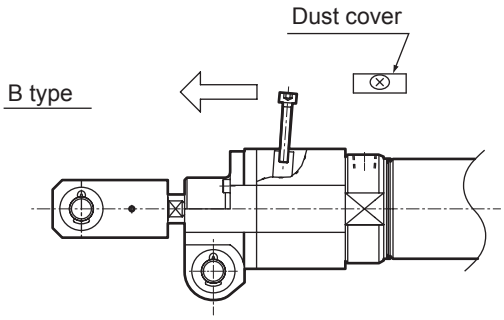

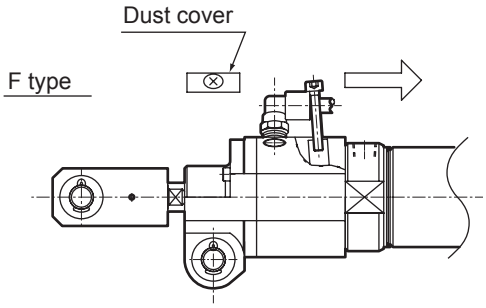

■ Do not disassemble the unit, as doing so may be dangerous.

1. Common (with T-switch)

⚠ CAUTION

■ When moving the switch stroke-direction

- The 1-color LED switch can be fine-tuned by ±3 mm from the default. If the adjusting range exceeds ±3 mm, or when fine-tuning the 2-color LED switch, move the band position.
- Loosen the switch fixing screw, shift the switch along the rail, then tighten at the specified position.
  When using T2, T3, T0, or T5, use a flathead screwdriver (clockwork screwdriver, precision screwdriver, etc.) with a grip diameter of 5 to 6 mm, a 2.4 mm or smaller tip, and a thickness of 0.3 mm or less to tighten the screws with a tightening torque of 0.1 to 0.2 N·m.
  When using T1, T*C, T2J, T2Y, T3Y, or T8, tighten the screw with a tightening torque of 0.5 to 0.7 N·m.
- The switch bracket rail has a marking 4 mm from the rail end. Use as a guide to the mounting position when replacing the switch. Switch rail markings are set to the default switch max. sensitivity position. The max. sensitivity position will change when the switch is changed or when the band is moved. Adjust the position accordingly in this case.

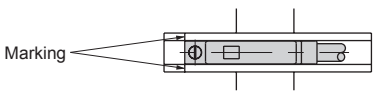

■ When moving the switch position to the circumferential direction

- Loosen the band fixing screw, shift the switch rail in the circumferential direction, then tighten at the specified position. Tightening torque is 0.6 to 0.8 N·m.

■ When the band position shifts

- Loosen the band fixing screw, shift the switch rail and band along the cylinder tube, and tighten at the specified position. Tightening torque is 0.6 to 0.8 N·m.

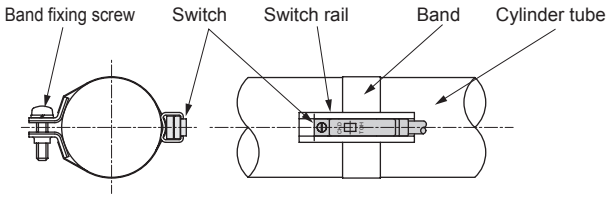

■ Switch mounting and travel method for tie rod mounting (A/C)

Mounting method

(1) Pass the plain and spring washers through the slotted hexagon head bolt, and fit it onto the holder.
(2) Fit the bracket onto the cylinder tie rod and tighten the hexagon socket head cap screw. Tightening torque is 0.5 to 0.7 N·m.
(3) Lastly, tighten the hexagon socket set screw. Tightening torque is 1.7 to 2.0 N·m.

Travel method

(1) Fine adjustment
Loosen the slotted hex socket bolt, move only the switch body, and fix at the required position. Tightening torque is 0.5 to 0.7 N·m.
(2) Rough adjustment
Completely loosen the slotted bolt and set screws, and move the entire mounting bracket to the required position. Tighten the slotted bolt. Tightening torque is 0.5 to 0.7 N·m.
Then tighten the set screw. Tightening torque is 1.7 to 2.0 N·m.

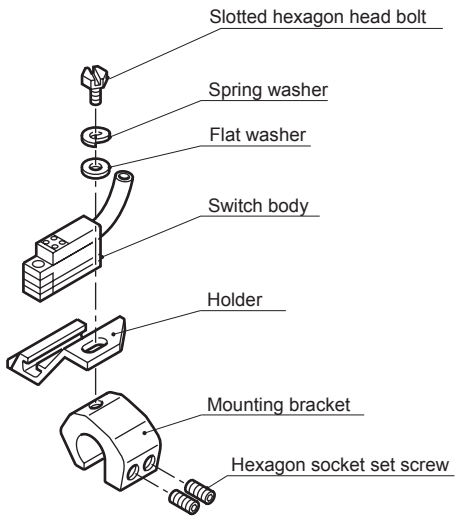

RCS2

Rotary clamp cylinder (single guide)

ø12/ø16/ø20/ø25/ø32/ø40/ø50/ø63

Special function

Overview

A rotary clamp cylinder with a simple structure which helps save space, realizing workpiece clamping in tight spaces.

CONTENTS

Product introduction	1064
Series variation	1066
● Double acting/single rod (RCS2)	1068
● Double acting/packing material fluoro rubber (RCS2-T2)	1078
● Double acting/anti-spatter adherence (RCS2-G4)	1084
Technical data	1090
⚠Safety precautions	1092

The cylinder switches T2YH, T2YV, T3YH, and T3YV are scheduled for end of production at the end of December 2023.

LCM
LCR
LCG
LCW
LCX
STM
STG
STS/STL
STR2
UCA2
ULK*
JSK/M2
JSG
JSC3/JSC4
USSD
UFCD
USC
UB
JSB3
LMB
LML
HCM
HCA
LBC
CAC4
UCAC2
CAC-N
UCAC-N
RCS2
RCC2
PCC
SHC
MCP
GLC
MFC
BBS
RRC
GRC
RV3*
NHS
HRL
LN
Hand
Chuk
MecHnd/Chuk
ShkAbs
FJ
FK
SpdContr
Ending

Simple design makes compact

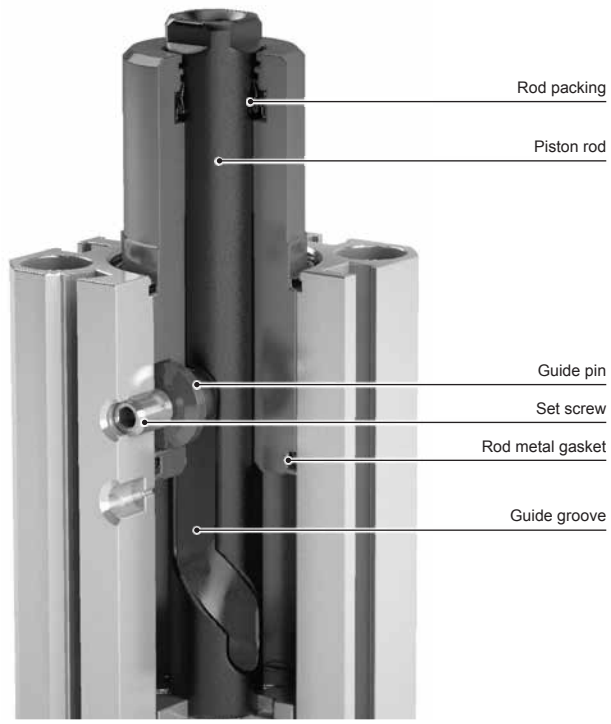

Simple structure helps save space

Single guide structure

A guide groove is used on the piston rod and slid against the guide pin to perform linear and rotational motion.

High maintainability

Consumable parts can be replaced

Guide pins and packing parts can be replaced.

Easy clamp lever orientation

Two widths across flats machining of rod end

Orienting the clamp lever can be done easily by using the rod end 2 WAF as a reference.

Cylinder switches for a variety of applications

A diverse lineup

The T-shaped and miniature F-shaped switches can be mounted.

2-color display AC magnetic field cylinder switch (T2YD, T2YDT) can be mounted

Enables high visibility

Multi-surface mounting that stresses visibility is possible.

4-surface mounting
(RCS2-20 to 63)

3-surface mounting
(RCS2-12/16)

High installation reproducibility

Reduce centering time during cylinder replacement

Centering during cylinder replacement can be done easily using a spigot.

Rod side spigot (standard specifications)

Spigot at head side (option)

Combination of rotary motion and linear motion

Clamp lever rotates 90°

Because the clamp lever rotates 90° when unclamped, workpiece setting and takeout are easy.

Clockwise 90° (R: right rotation)

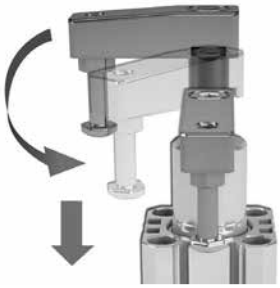

Counterclockwise 90° (L: left rotation)

clamping a reality

Structure that considers environment conditions

A coil scraper is equipped as standard.

A coil scraper with a bore size of ø20 or more is equipped as standard. Removes spatter on the rod surface and prevents it from entering the cylinder.

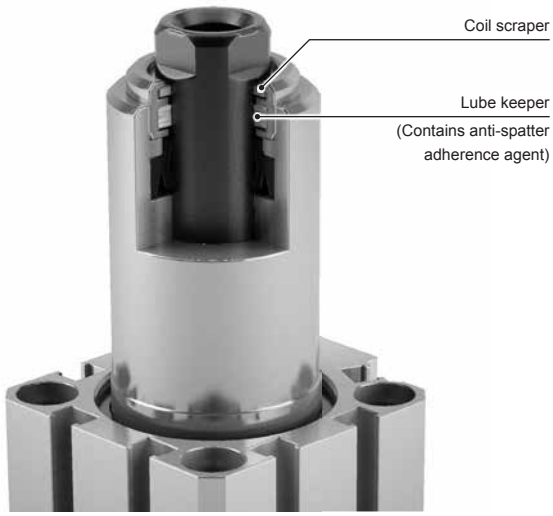

Anti-spatter adherence (G4) can also be selected

Anti-spatter adherence specification G4 is available, including a lubricator with fiber composite containing anti-spatter adherence agent and a coil scraper installed (bore size ø32 or more).
It provides even better prevention of spatter adhering to the piston rod during arc welding.

Packing material fluoro rubber (variation code: T2) can be selected

Usage examples

Jigs (pallets) on the conveyor and workpiece clamps

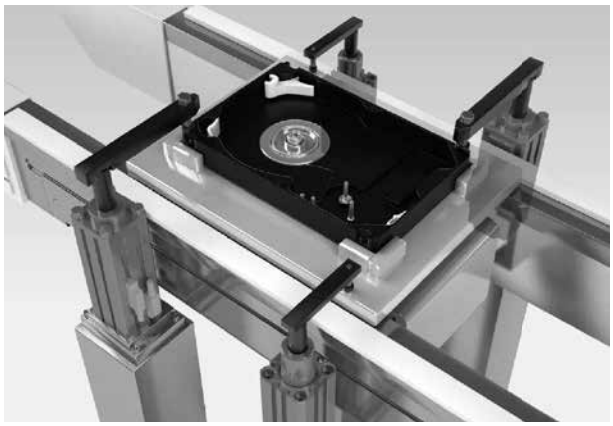

Workpiece clamp for dry burr removal and finishing process

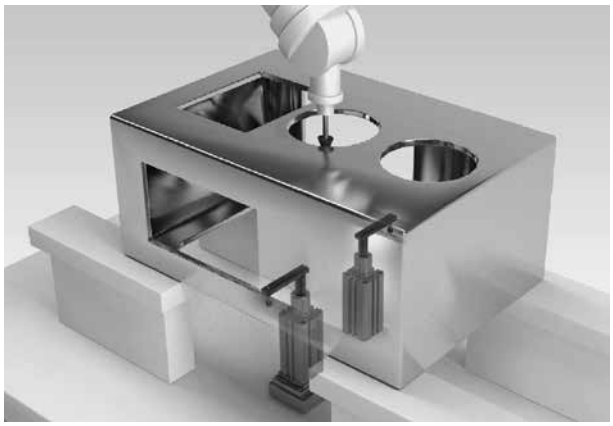

* Short lever: RCS2 Long lever: RCC2

Transport robot workpiece auxiliary holder

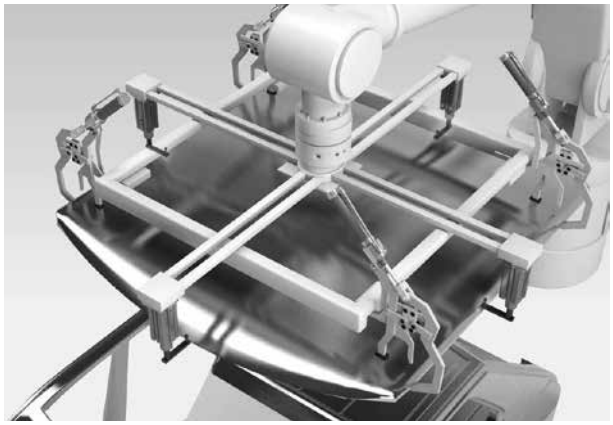

Welding jig workpiece clamp

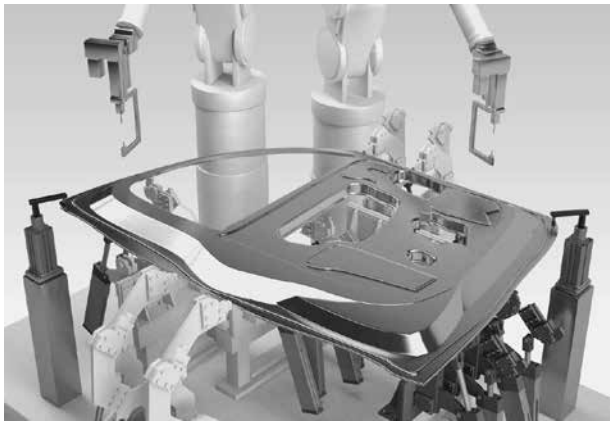

Series variation

Rotary clamp cylinder RCS2 Series

Variation	Model No. JIS symbol	Bore size (mm)	Stroke (mm)							
			17.5	19.5	25	29	27.5	29.5	35	39
Double acting/single rod	RCS2 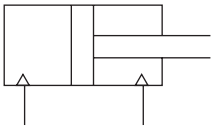	ø12/ø16	●				●			
		ø20/ø25		●				●		
		ø32/ø40			●				●	
		ø50/ø63				●				●
Double acting Packing material fluoro rubber	RCS2-T2 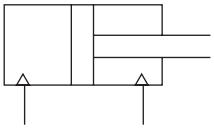	ø12/ø16	●				●			
		ø20/ø25		●				●		
		ø32/ø40			●				●	
		ø50/ø63				●				●
Double acting Anti-spatter adherence	RCS2-G4 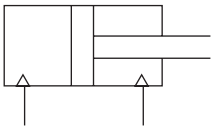	ø32/ø40			●				●	
		ø50/ø63				●				●

LCM
LCR
LCG
LCW
LCX
STM
STG
STS/STL
STR2
UCA2
ULK*
JSK/M2
JSG
JSC3/JSC4
USSD
UFCD
USC
UB
JSB3
LMB
LML
HCM
HCA
LBC
CAC4
UCAC2
CAC-N
UCAC-N
RCS2
RCC2
PCC
SHC
MCP
GLC
MFC
BBS
RRC
GRC
RV3*
NHS
HRL
LN
Hand
Chuk
MecHnd/Chuk
ShkAbs
FJ
FK
SpdContr
Ending

●: Standard, ◎: Option, : Not available

Stroke (mm)						Rotary stroke	Clamp stroke	Mounting			Option	Accessory	Switch	Page
								Basic	Rod side flange	Head side flange	Spigot at head side	Clamp lever		
37.5	39.5	45	49	65	69	(mm)	(mm)	00	FA	FB	H	A		
●						7.5	10/20/30	◎	◎	◎	◎	◎	◎	1068
	●					9.5								
		●		●		15								
			●		●	19	30 / 50							
●						7.5	10/20/30	◎	◎	◎	◎	◎	◎	1078
	●					9.5								
		●		●		15								
			●		●	19	30 / 50							
		●		●		15	10/20/30	◎	◎	◎	◎	◎	◎	1084
			●		●	19	30 / 50							

Rotary clamp cylinder/single guide double acting/single rod

RCS2 Series

● Bore size: ø12/ø16/ø20/ø25/ø32/ø40/ø50/ø63

● Double acting

JIS symbol

RoHS

Specifications

1 MPa ≈ 145.0 psi, 1 MPa = 10 bar

Item		RCS2							
Bore size	mm	ø12	ø16	ø20	ø25	ø32	ø40	ø50	ø63
Actuation		Double acting							
Working fluid		Compressed air							
Max. working pressure	MPa	1.0 (≈145 psi, 10 bar)							0.6 (≈87 psi, 6 bar)
Min. working pressure	MPa	0.1 (≈15 psi, 1 bar) (*1)							
Proof pressure	MPa	1.6 (≈232 psi, 16 bar)							
Ambient temperature	°C	-10 (14°F) to 60 (140°F) (no freezing)							
Port size	Rc, NPT, G	M5				1/8		1/4	
Stroke tolerance	mm	+1.0 0		+1.2 0					
Working piston speed	mm/s	50 to 200							
Cushion		Rod side: rubber cushioned, Head side: no cushioning							
Lubrication		Not required (use turbine oil class 1 ISO VG32 if necessary for lubrication)							
Turning ratio		90° ±10°							
Rotation direction		Right/Left							
Non-rotating accuracy (clamping, default value)		±1.4°	±1.2°			±0.9°		±0.7°	
Pressurized area mm²	Pull side	84	150	201	377	603	1056	1649	2803
	Push side	113	201	314	490	804	1256	1963	3117

*1: With constant pressurization

Stroke

Bore size (mm)	Stroke (mm)	Rotary stroke *1 (mm)	Clamp stroke *2 (mm)
ø12, ø16	17.5, 27.5, 37.5	7.5	10, 20, 30
ø20, ø25	19.5, 29.5, 39.5	9.5	10, 20, 30
ø32, ø40	25, 35, 45, 65	15	10, 20, 30, 50
ø50, ø63	29, 39, 49, 69	19	10, 20, 30, 50

*1: The rotary stroke is the dimension of forward action when rotating from the unclamp end in the clamping direction.
*2: The clamp stroke is the dimension of forward action in the clamping direction after rotation.

Rotating angle/rotation direction/non-rotating accuracy

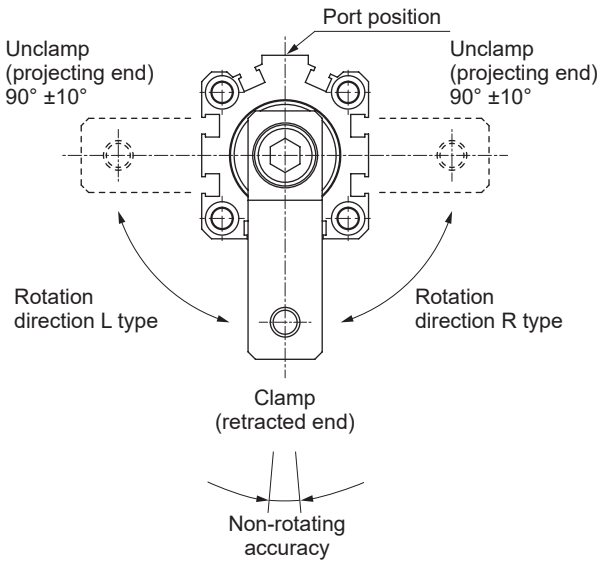

LCM
LCR
LCG
LCW
LCX
STM
STG
STS/STL
STR2
UCA2
ULK*
JSK/M2
JSG
JSC3/JSC4
USSD
UFCD
USC
UB
JSB3
LMB
LML
HCM
HCA
LBC
CAC4
UCAC2
CAC-N
UCAC-N
RCS2
RCC2
PCC
SHC
MCP
GLC
MFC
BBS
RRC
GRC
RV3*
NHS
HRL
LN
Hand
Chuk
MecHnd/Chuk
ShkAbs
FJ
FK
SpdContr
Ending

Switch specifications (T-switch)

● 1-color/2-color LED/for AC magnetic field

Item	Proximity 2-wire	Proximity 2-wire			Proximity 3-wire				Reed 2-wire							Proximity 2-wire
	T1H/T1V	T2H/ T2V	T2YH/ T2YV	T2WH/ T2WV	T3H/ T3V	T3PH/ T3PV	T3YH/ T3YV	T3WH/ T3WV	T0H/T0V		T5H/T5V		T8H/T8V			T2YD (*2) T2YDT
Applications	Programmable controller For relay, compact solenoid valve	Dedicated for programmable controller			Programmable controller, For relay				Programmable controller, For relay		Programmable controller, relay/IC circuit (no indicator lamp), for serial connection		For programmable controller, relay			Dedicated for programmable controller
Output method	-				NPN output	PNP output	NPN output	NPN output	-							
Power supply voltage	-				10 to 28 VDC				-							
Load voltage	85 to 265 VAC	10 to 30 VDC		24 VDC ±10%	30 VDC or less				12/24 VDC	100/110 VAC	5/12/24 VDC	100/110 VAC	12/24 VDC	110 VAC	220 VAC	24 VDC ±10%
Load current	5 to 100mA	5 to 20mA(*1)			100 mA or less		50 mA or less		5 to 50mA	7 to 20mA	50 mA or less	20 mA or less	5 to 50mA	7 to 20mA	7 to 10mA	5 to 20 mA (*1)
Indicator lamp	LED (Lit when ON)	LED (Lit when ON)	Red/green LED (Lit when ON)	Red/green LED (Lit when ON)	LED (Lit when ON)	Yellow LED (Lit when ON)	Red/green LED (Lit when ON)	Red/green LED (Lit when ON)	LED (Lit when ON)		No indicator lamp		LED (Lit when ON)			Red/green LED (Lit when ON)
Leakage current	1 mA or less with 100 VAC, 2 mA or less with 200 VAC	1 mA or less			10 μA or less				0mA							1 mA or less
Weight g	1 m: 33 3 m: 87 5 m: 142	1 m: 18 3 m: 49 5 m: 80	1 m: 33 3 m: 87 5 m: 142	1 m: 18 3 m: 49 5 m: 80	1 m: 18 3 m: 49 5 m: 80		1 m: 33 3 m: 87 5 m: 142	1 m: 18 3 m: 49 5 m: 80	1 m: 18 3 m: 49 5 m: 80				1 m: 33 3 m: 87 5 m: 142			1 m: 61 3 m: 166 5 m: 272

*1: The above max. load current is 20 mA at 25°C. The current is lower than 20 mA if the operating ambient temperature around the switch is higher than 25˚C. (5 to 10 mA at 60°C)
*2: Switch for AC magnetic field (T2YD/T2YDT) cannot be used in DC magnetic field.

Switch specifications (F-switch)

● 1-color/2Color display

Item	Proximity 2-wire	Proximity 3-wire	Proximity 2-wire		Proximity 3-wire		
	F2S	F3S	F2H/F2V	F2YH/ F2YV	F3H/F3V	F3PH/F3PV (Made to order)	F3YH/ F3YV
Applications	Programmable controller Dedicated	Programmable controller,For relay	Programmable controller Dedicated		For programmable controller, relay		
Output method	-	NPN output	-		NPN output	PNP output	NPN output
Power supply voltage	-	10 to 28 VDC	-		10 to 28 VDC	4.5 to 28 VDC	10 to 28 VDC
Load voltage	10 to 30 VDC	30 VDC or less	10 to 30 VDC	24 VDC ±10%	30 VDC or less		
Load current	5 to 20mA	50 mA or less	5 to 20mA		100 mA or less	50 mA or less	
Indicator lamp	LED (Lit when ON)		Yellow LED (Lit when ON)	Red/green LED (Lit when ON)	Yellow LED (Lit when ON)		Red/green LED (Lit when ON)
Leakage current	1 mA or less	10 μA or less	1 mA or less		10 μA or less		
Weight g	1 m: 10 3 m: 29						

*1: The F-switch uses a bend-resistant lead wire.

Cylinder weight

(Unit: g)

Bore size (mm)	Stroke (mm)														Rod side flange(FA)	Head side flange(FB)	Switch weight
	17.5	19.5	25	29	27.5	29.5	35	39	37.5	39.5	45	49	65	69			
ø12	69				84				99						49	49	Refer to the weight in the switch specifications above.
ø16	100				123				146						59	59	
ø20		212				252				292					114	114	
ø25		267				314				361					125	125	
ø32			333				372				411		489		145	145	
ø40			554				629				704		854		193	193	
ø50				997				1118				1239		1481	335	335	
ø63				1373				1526				1679		1985	464	464	

Theoretical thrust table

(Unit: N)

Bore size (mm)	Operating direction	Working pressure MPa									
		0.1	0.2	0.3	0.4	0.5	0.6	0.7	0.8	0.9	1.0
ø12	Push	11.3	22.6	33.9	45.2	56.5	67.9	79.2	90.5	1.02×10^2	1.13×10^2
	Pull	8.5	17.0	25.4	33.9	42.4	50.9	59.4	67.9	76.3	84.8
ø16	Push	20.1	40.2	60.3	80.4	1.01×10^2	1.21×10^2	1.41×10^2	1.61×10^2	1.81×10^2	2.01×10^2
	Pull	15.1	30.2	45.2	60.3	75.4	90.5	1.06×10^2	1.21×10^2	1.36×10^2	1.51×10^2
ø20	Push	31.4	62.8	94.2	1.26×10^2	1.57×10^2	1.88×10^2	2.20×10^2	2.51×10^2	2.83×10^2	3.14×10^2
	Pull	20.1	40.2	60.3	80.4	1.01×10^2	1.21×10^2	1.41×10^2	1.61×10^2	1.81×10^2	2.01×10^2
ø25	Push	49.1	98.2	1.47×10^2	1.96×10^2	2.45×10^2	2.95×10^2	3.44×10^2	3.93×10^2	4.42×10^2	4.91×10^2
	Pull	37.8	75.6	1.13×10^2	1.51×10^2	1.89×10^2	2.27×10^2	2.64×10^2	3.02×10^2	3.40×10^2	3.78×10^2
ø32	Push	80.4	1.61×10^2	2.41×10^2	3.22×10^2	4.02×10^2	4.83×10^2	5.63×10^2	6.43×10^2	7.24×10^2	8.04×10^2
	Pull	60.3	1.21×10^2	1.81×10^2	2.41×10^2	3.02×10^2	3.62×10^2	4.22×10^2	4.83×10^2	5.43×10^2	6.03×10^2
ø40	Push	1.26×10^2	2.51×10^2	3.77×10^2	5.03×10^2	6.28×10^2	7.54×10^2	8.80×10^2	1.01×10^3	1.13×10^3	1.26×10^3
	Pull	1.06×10^2	2.11×10^2	3.17×10^2	4.22×10^2	5.28×10^2	6.33×10^2	7.39×10^2	8.44×10^2	9.50×10^2	1.06×10^3
ø50	Push	1.96×10^2	3.93×10^2	5.89×10^2	7.85×10^2	9.82×10^2	1.18×10^3	1.37×10^3	1.57×10^3	1.77×10^3	1.96×10^3
	Pull	1.65×10^2	3.30×10^2	4.95×10^2	6.60×10^2	8.25×10^2	9.90×10^2	1.15×10^3	1.32×10^3	1.48×10^3	1.65×10^3
ø63	Push	3.12×10^2	6.23×10^2	9.35×10^2	1.25×10^3	1.56×10^3	1.87×10^3	-	-	-	-
	Pull	2.80×10^2	5.61×10^2	8.41×10^2	1.12×10^3	1.40×10^3	1.68×10^3	-	-	-	-

LCM
LCR
LCG
LCW
LCX
STM
STG
STS/STL
STR2
UCA2
ULK*
JSK/M2
JSG
JSC3/JSC4
USSD
UFCD
USC
UB
JSB3
LMB
LML
HCM
HCA
LBC
CAC4
UCAC2
CAC-N
UCAC-N
RCS2
RCC2
PCC
SHC
MCP
GLC
MFC
BBS
RRC
GRC
RV3*
NHS
HRL
LN
Hand
Chuk
MecHnd/Chuk
ShkAbs
FJ
FK
SpdContr
Ending

How to order

Without switch (built-in magnet for switch)

RCS2 - 00 - 12 ◯ - 17.5 - R ———— H A

With switch (built-in magnet for switch)

RCS2 - 00 - 12 ◯ - 17.5 - R - T0H - D - H A

Ⓐ Mounting
Ⓑ Bore size
Ⓒ Port thread
Ⓓ Stroke
Ⓔ Rotation direction
Ⓕ Switch model No.
Ⓖ Switch quantity
Ⓗ Option *1
Ⓘ Accessory

Code	Description
Ⓐ Mounting	
00	Basic
FA	Rod side flange
FB	Head side flange
Ⓑ Bore size (mm)	
12	ø12
16	ø16
20	ø20
25	ø25
32	ø32
40	ø40
50	ø50
63	ø63
Ⓒ Port thread	
Blank	Rc thread (M5 for ø25 and less)
N	NPT thread (ø32 and over)
G	G thread (ø32 and over)
Ⓓ Stroke (mm)	
Refer to the stroke table on the following page.	
Ⓔ Rotation direction	See the following page for details.
R	Rotates 90° in CW direction when retracted
L	Rotates 90° in CCW direction when retracted

Ⓕ Switch model No.

Straight Lead wire	L-shaped Lead wire	Contact	Voltage AC	Voltage DC	Indicator	Lead wire	Bore size 12	16	20	25	32	40	50	63
T0H*	T0V*	Reed	●	●	1-color LED	2-wire	●	●	●	●	●	●	●	●
T5H*	T5V*	Reed	●	●	No indicator lamp	2-wire	●	●	●	●	●	●	●	●
T8H*	T8V*	Reed	●	●	1-color LED				●	●	●	●	●	●
T1H*	T1V*	Proximity	●		1-color LED	2-wire			●	●	●	●	●	●
T2H*	T2V*	Proximity		●	1-color LED	2-wire	●	●	●	●	●	●	●	●
T3H*	T3V*	Proximity		●	1-color LED	3-wire	●	●	●	●	●	●	●	●
T3PH*	T3PV*	Proximity		●	1-color LED (PNP output)	3-wire	●	●	●	●	●	●	●	●
T2WH*	T2WV*	Proximity		●	2-color LED	2-wire	●	●	●	●	●	●	●	●
T2YH*	T2YV*	Proximity		●	2-color LED	2-wire			●	●	●	●	●	●
T3WH*	T3WV*	Proximity		●	2-color LED	3-wire	●	●	●	●	●	●	●	●
T3YH*	T3YV*	Proximity		●	2-color LED	3-wire			●	●	●	●	●	●
T2YD*	-	Proximity		●	2-color LED AC magnetic field	2-wire			●	●	●	●	●	●
T2YDT*	-	Proximity		●	2-color LED AC magnetic field	2-wire			●	●	●	●	●	●
T2JH*	T2JV*	Proximity		●	1-color LED off-delay	2-wire			●	●	●	●	●	●
F2S*		Proximity		●	1-color LED	2-wire			●	●				
F3S*		Proximity		●	1-color LED	3-wire			●	●				
F2H*	F2V*	Proximity		●	1-color LED	2-wire			●	●				
F3H*	F3V*	Proximity		●	1-color LED	3-wire			●	●				
F3PH*	F3PV*	Proximity		●	1-color LED (PNP output) (made to order)	3-wire			●	●				
F2YH*	F2YV*	Proximity		●	2-color LED	2-wire			●	●				
F3YH*	F3YV*	Proximity		●	2-color LED	3-wire			●	●				

* Lead wire length	
Blank	1 m (standard)
3	3 m (option)
5	5 m (option) *2

Ⓖ Switch quantity	
R	1 on rod side
H	1 on head side
D	With both sides

Ⓗ Option	
Blank	No option
H	Spigot at head side

Ⓘ Accessory (included at shipment)	
Blank	No accessories
A	Clamp lever

Precautions for model No. selection

*1: For Ⓐ Mounting format "FA" or "FB", Ⓗ Option "H" cannot be selected.
*2: F-switch cannot be selected.

[Example of model No.]

RCS2-00-12-17.5-R-T0H-D-HA

Model: Rotary clamp cylinder/double acting

Ⓐ Mounting : Basic
Ⓑ Bore size : ø12 mm
Ⓒ Port thread : M5
Ⓓ Stroke : 17.5 mm
Ⓔ Rotation direction : Rotates 90° in CW direction when retracted
Ⓕ Switch model No. : Reed T0H switch, lead wire 1 m
Ⓖ Switch quantity : With both sides
Ⓗ Option : Spigot at head side
Ⓘ Accessory : Clamp lever

[Stroke table]

Stroke	Bore size								Rotation stroke	Clamp stroke
	12	16	20	25	32	40	50	63		
17.5	●	●							7.5	10
19.5			●	●					9.5	10
25					●	●			15	10
29							●	●	19	10
27.5	●	●							7.5	20
29.5			●	●					9.5	20
35					●	●			15	20
39							●	●	19	20
37.5	●	●							7.5	30
39.5			●	●					9.5	30
45					●	●			15	30
49							●	●	19	30
65					●	●			15	50
69							●	●	19	50

[Rotation direction]

R	Rotates 90° in CW direction when retracted	L	Rotates 90° in CCW direction when retracted

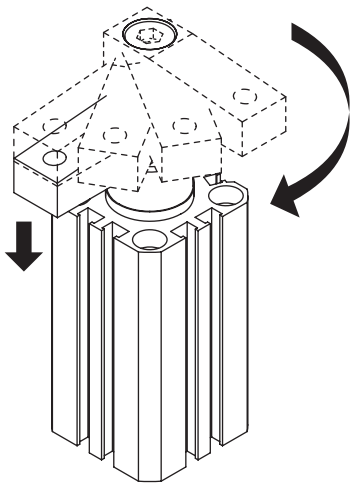

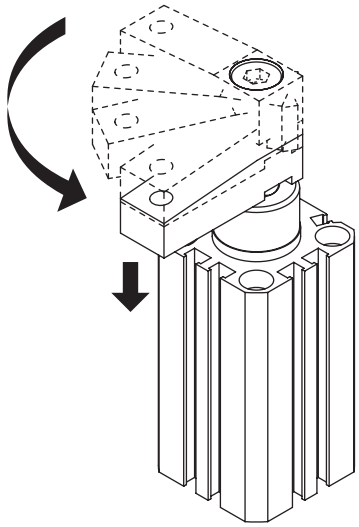

Discrete switch model No.

SW - T0H3

Switch model No.
(Item Ⓕ on page 1070)

Flange kit model No.

RCS2 - FA - 12

Bore size
(Item Ⓑ on page 1070)

Clamp lever kit model No.

RCS2 - A - 12

Code	Applicable bore size
12	ø12
16	ø16
20	ø20, ø25
32	ø32, ø40
50	ø50, ø63

LCM
LCR
LCG
LCW
LCX
STM
STG
STS/STL
STR2
UCA2
ULK*
JSK/M2
JSG
JSC3/JSC4
USSD
UFCD
USC
UB
JSB3
LMB
LML
HCM
HCA
LBC
CAC4
UCAC2
CAC-N
UCAC-N
RCS2
RCC2
PCC
SHC
MCP
GLC
MFC
BBS
RRC
GRC
RV3*
NHS
HRL
LN
Hand
Chuk
MecHnd/Chuk
ShkAbs
FJ
FK
SpdContr
Ending

Internal structure and parts list (ø12, ø16, ø20, ø25)

● RCS2-12/16

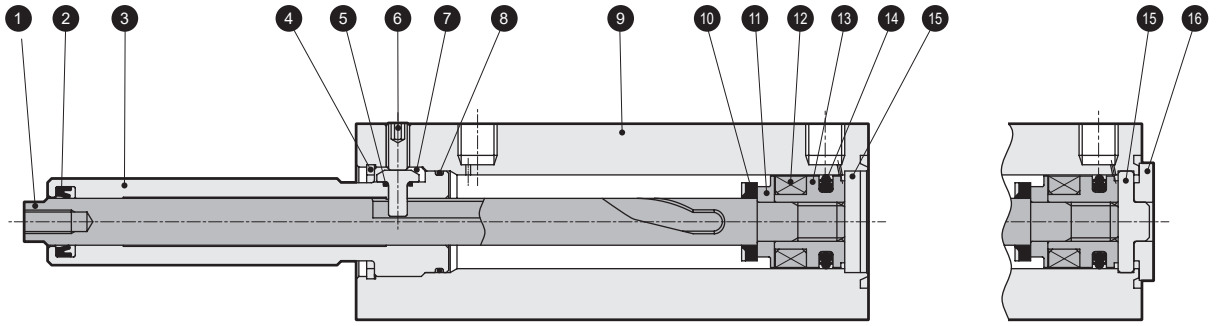

Spigot at head side (H)

No.	Part name	Material	Remarks	No.	Part name	Material	Remarks
1	Piston rod	Stainless steel	Special treatment	10	Cushion rubber (R)	Urethane rubber	
2	Rod packing	Nitrile rubber		11	Spacer	ø12: Aluminum alloy	Zinc chromate
3	Rod metal	Aluminum alloy	Hard alumite			ø16: Special plastic	
4	Round R type snap ring	Steel	Zinc phosphate	12	Magnet	Plastic	
5	Guide pin gasket	Nitrile rubber		13	Piston	Aluminum alloy	Zinc chromate
6	Hexagon socket set screw	Stainless steel		14	Piston packing	Nitrile rubber	
7	Guide pin	Steel	Special treatment	15	Cover	Stainless steel	
8	Rod metal gasket	Nitrile rubber		16	Spigot ring	Aluminum alloy	Zinc chromate
9	Body	Aluminum alloy	Hard alumite				

● RCS2-20/25

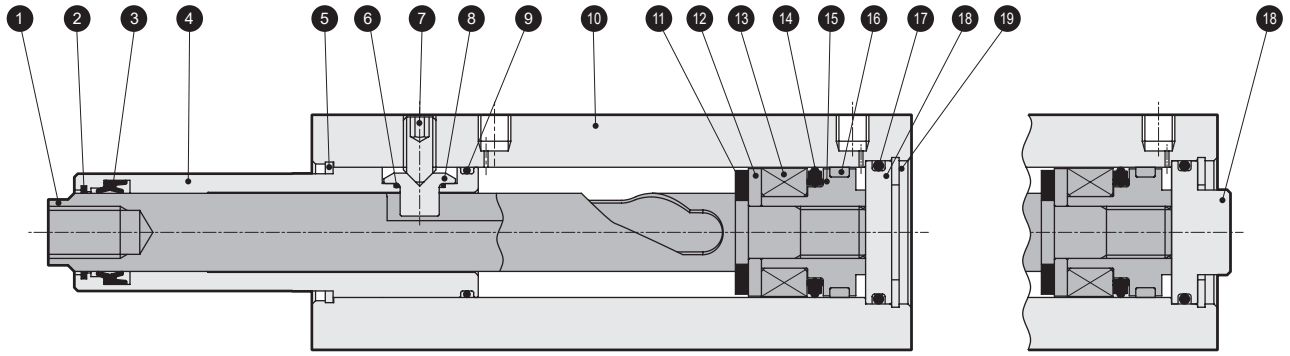

Spigot at head side (H)

No.	Part name	Material	Remarks	No.	Part name	Material	Remarks
1	Piston rod	Stainless steel	Special treatment	11	Cushion rubber (R)	Urethane rubber	
2	Coil scraper	Copper alloy		12	Spacer	Aluminum alloy	Zinc chromate
3	Rod packing	Nitrile rubber		13	Magnet	Plastic	
4	Rod metal	Aluminum alloy	Hard alumite	14	Piston packing	Nitrile rubber	
5	Circlip	Steel		15	Piston	Aluminum alloy	Zinc chromate
6	Guide pin gasket	Nitrile rubber		16	Wear ring	Polyacetal resin	
7	Hexagon socket set screw	Stainless steel		17	Cover gasket	Nitrile rubber	
8	Guide pin	Steel	Special treatment	18	Base plate	Aluminum alloy	Zinc chromate
9	Rod metal gasket	Nitrile rubber		19	C-snap ring	Steel	Zinc phosphate
10	Body	Aluminum alloy	Hard alumite				

Consumable parts list

● Packing kit

Bore size (mm)	Kit No.	Consumable parts No.
ø12	RCS2-12K	2 5 8 10 14
ø16	RCS2-16K	
ø20	RCS2-20K	2 3 6 9 11 14 16 17
ø25	RCS2-25K	

● Guide pin kit

Bore size (mm)	Kit No.	Consumable parts No.
ø12	RCS2-G-12	6 7
ø16	RCS2-G-16	
ø20	RCS2-G-20	7 8
ø25	RCS2-G-25	

LCM
LCR
LCG
LCW
LCX
STM
STG
STS/STL
STR2
UCA2
ULK*
JSK/M2
JSG
JSC3/JSC4
USSD
UFCD
USC
UB
JSB3
LMB
LML
HCM
HCA
LBC
CAC4
UCAC2
CAC-N
UCAC-N
RCS2
RCC2
PCC
SHC
MCP
GLC
MFC
BBS
RRC
GRC
RV3*
NHS
HRL
LN
Hand
Chuk
MecHnd/Chuk
ShkAbs
FJ
FK
SpdContr
Ending

Internal structure and parts list (ø32, ø40, ø50, ø63)

● RCS2-32

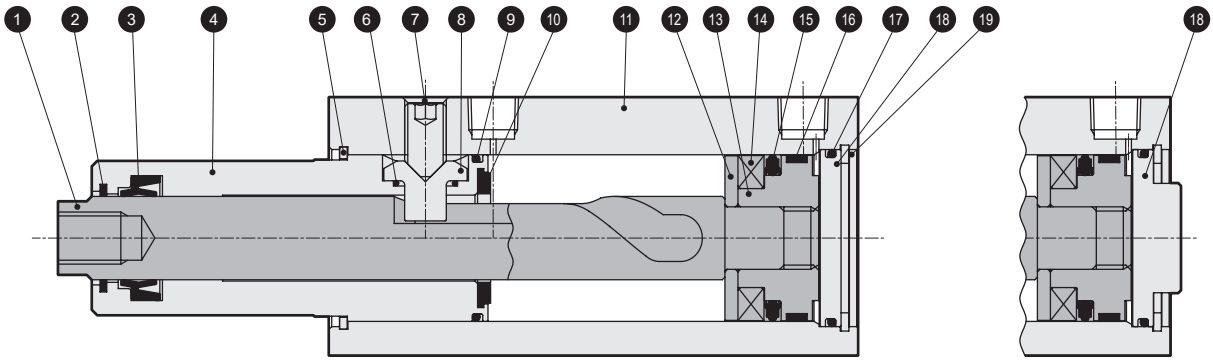

Spigot at head side (H)

No.	Part name	Material	Remarks	No.	Part name	Material	Remarks
1	Piston rod	Stainless steel	Special treatment	11	Body	Aluminum alloy	Hard alumite
2	Coil scraper	Copper alloy		12	Spacer	Aluminum alloy	
3	Rod packing	Nitrile rubber		13	Piston	Aluminum alloy	Zinc chromate
4	Rod metal	Aluminum alloy	Hard alumite	14	Magnet	Plastic	
5	Circlip	Steel		15	Piston packing	Nitrile rubber	
6	Guide pin gasket	Nitrile rubber		16	Wear ring	Polyacetal resin	
7	Hexagon socket set screw	Stainless steel		17	Cover gasket	Nitrile rubber	
8	Guide pin	Steel	Special treatment	18	Base plate	Aluminum alloy	Zinc chromate
9	Rod metal gasket	Nitrile rubber		19	C-snap ring	Steel	Zinc phosphate
10	Cushion rubber (R)	Urethane rubber					

● RCS2-40/50/63

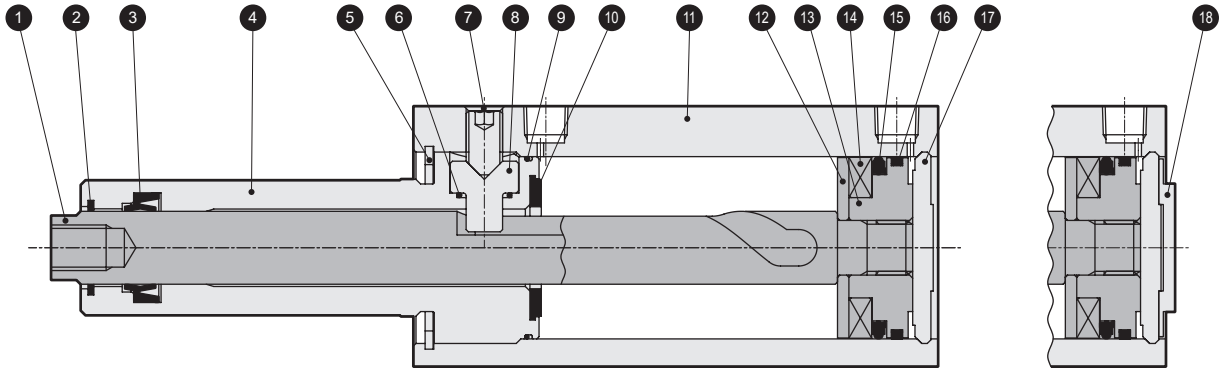

Spigot at head side (H)

No.	Part name	Material	Remarks	No.	Part name	Material	Remarks
1	Piston rod	Stainless steel	Special treatment	10	Cushion rubber (R)	Urethane rubber	
2	Coil scraper	Copper alloy		11	Body	Aluminum alloy	Hard alumite
3	Rod packing	Nitrile rubber		12	Spacer	Aluminum alloy	
4	Rod metal	Aluminum alloy	Hard alumite	13	Piston	Aluminum alloy	Zinc chromate
5	C-snap ring	Steel	Zinc phosphate	14	Magnet	Plastic	
6	Guide pin gasket	Nitrile rubber		15	Piston packing	Nitrile rubber	
7	Hexagon socket set screw	Stainless steel		16	Wear ring	Polyacetal resin	
8	Guide pin	Steel	Special treatment	17	Cover	Aluminum alloy	
9	Rod metal gasket	Nitrile rubber		18	Spigot ring	Aluminum alloy	Zinc chromate

Consumable parts list

● Packing kit

Bore size (mm)	Kit No.	Consumable parts No.
ø32	RCS2-32K	2 3 6 9 10 15 16 17
ø40	RCS2-40K	2 3 6 9 10 15 16
ø50	RCS2-50K	
ø63	RCS2-63K	

● Guide pin kit

Bore size (mm)	Kit No.	Consumable parts No.
ø32	RCS2-G-32	7 8
ø40	RCS2-G-40	7 8
ø50	RCS2-G-50	
ø63	RCS2-G-63	

LCM
LCR
LCG
LCW
LCX
STM
STG
STS/STL
STR2
UCA2
ULK*
JSK/M2
JSG
JSC3/JSC4
USSD
UFCD
USC
UB
JSB3
LMB
LML
HCM
HCA
LBC
CAC4
UCAC2
CAC-N
UCAC-N
RCS2
RCC2
PCC
SHC
MCP
GLC
MFC
BBS
RRC
GRC
RV3*
NHS
HRL
LN
Hand
Chuk
MecHnd/Chuk
ShkAbs
FJ
FK
SpdContr
Ending

Dimensions (basic shape: 00)

● RCS2-00-12/16

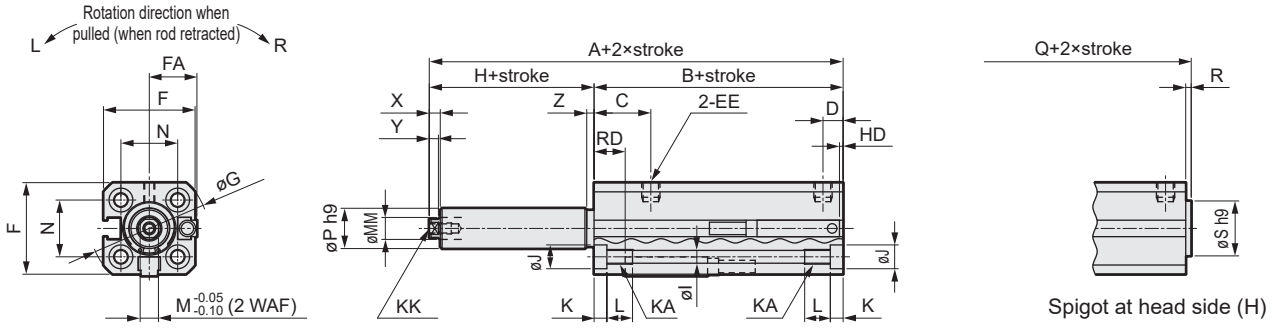

● RCS2-00-20/25

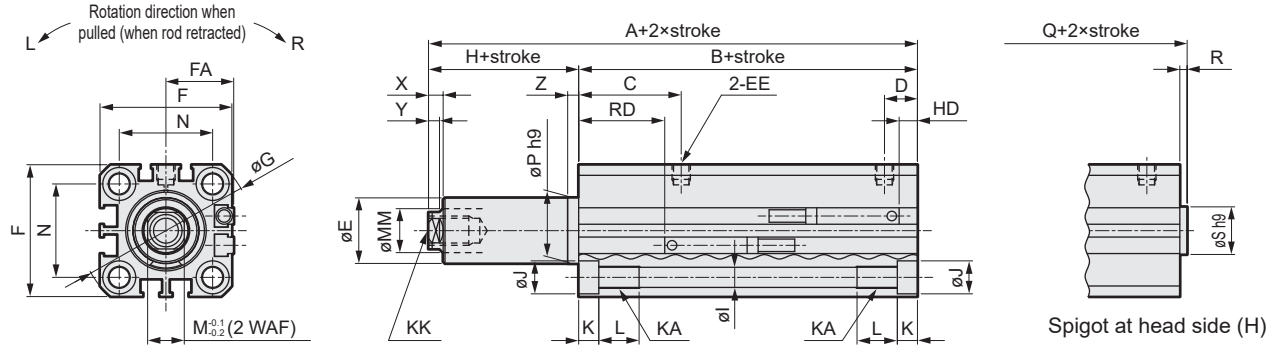

● RCS2-00-32/40/50/63

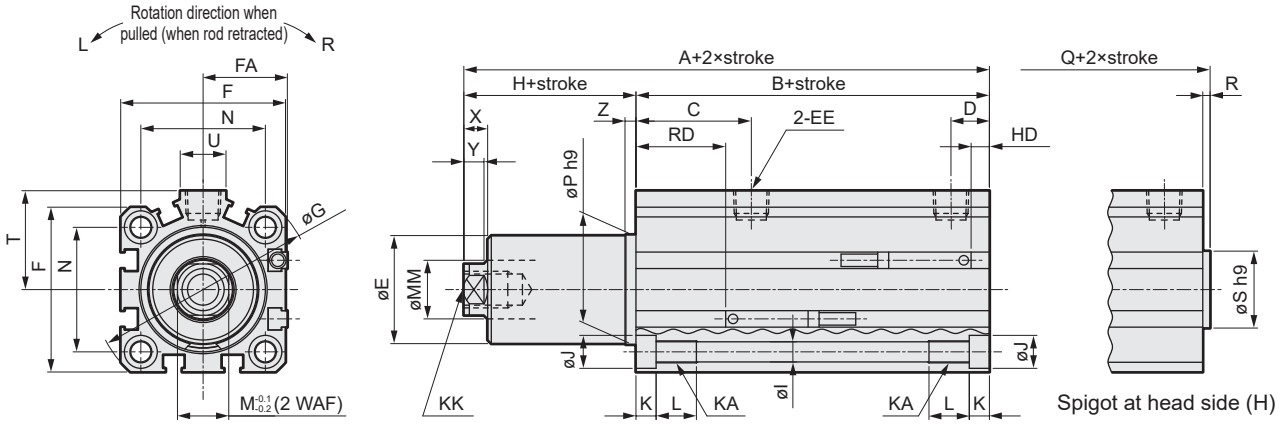

Code	Basic (00) dimensions table																									
Bore size	A	B	C	D	E	EE	F	G	H	I	J	K	KA	KK	L	M	MM	N	P	Q	R	S	T	U	X	Y	Z
ø12	33	28	15.5	5.5	—	M5 depth 4	25	32	5	3.5	6.5	3.5	M4	M3 depth 5.5	7	5	6	15.5	11	34.5	1.5	15	—	–	3	2.5	2
ø16	33.5	28.5	15	5.5	—	M5 depth 4	29	38	5	3.5	6.5	3.5	M4	M5 depth 6.5	7	7	8	20	14	34.9	1.5	20	—	–	3	2.5	2.2
ø20	53.5	52.5	28	9	17.9	M5 depth 4	36	47	1	5.5	9	5.5	M6	M8 depth 11	11	10	12	25.5	18	55.5	2	13	—	–	4	3	3
ø25	54.5	53.5	27.5	10.5	22.5	M5 depth 4	40	51	1	5.5	9	5.5	M6	M8 depth 11	11	10	12	28	23	56.5	2	15	—	–	4	3	3
ø32	63.5	56.5	31.5	10.5	29.5	Rc1/8	45	60	7	5.5	9	5.5	M6	M10 depth 12	11	14	16	34	30	65.5	2	21	27	12.5	6.5	5.5	3
ø40	64.5	50	29	9	29.5	Rc1/8	52	69	14.5	5.5	9	5.5	M6	M10 depth 12	11	14	16	40	30	66.5	2	28	31	15	6.5	5.5	3
ø50	74	57.5	34	11.5	36.5	Rc1/4	64	86	16.5	6.9	11	6.5	M8	M12 depth 16	14	17	20	50	37	76	2	35	39	18	7.5	5.5	3.5
ø63	77	61	34.5	10.5	47.5	Rc1/4	77	103	16	8.7	14	9	M10	M12 depth 16	20	17	20	60	48	79	2	35	45.5	23	7.5	5.5	3.5

Code	Switch model No.																			
	T2, T3, T3P, T0, T5			T1, T2YD, T2YDT			T2Y, T3Y, T2J			T2W, T3W			T8			F2S, F3S			F2, F3, F3P, F2Y, F3Y	
Bore size	RD	HD	FA	RD	HD	FA	RD	HD	FA	RD	HD	FA	RD	HD	FA	RD	HD	FA	RD	HD
ø12	8.5	0.5	13 (16.5)	—	–	–	–	–	–	10.5	2.5	13 (16.5)	—	–	–	–	–	–	–	–
ø16	9	0.5	15 (18.5)	—	–	–	–	–	–	11	2.5	15 (18.5)	—	–	–	–	–	–	–	–
ø20	23.5	10	18.5 (22)	22.5	9	29.3 (32.3)	22.5	9	24.3 (27.3)	25.5	12	18.5 (22)	17.5	4	24.3 (27.3)	27	13.5	31.5	28	14.5
ø25	24.5	9.5	20.5 (24)	23.5	8.5	31.3 (34.3)	23.5	8.5	26.3 (29.3)	26.5	11.5	20.5 (24)	18.5	3.5	26.3 (29.3)	28	13	33.5	29	14
ø32	26.5	10.5	23 (26.5)	25.5	9.5	33.8 (36.8)	25.5	9.5	28.8 (31.8)	28.5	12.5	23 (26.5)	20.5	4.5	28.8 (31.8)	—	–	–	–	–
ø40	23.5	7.5	26.5 (30)	22.5	6.5	37.3 (40.3)	22.5	6.5	32.3 (35.3)	25.5	9.5	26.5 (30)	17.5	1.5	32.3 (35.3)	—	–	–	–	–
ø50	28.5	10	32.5 (36)	27.5	9	43.3 (46.3)	27.5	9	38.3 (41.3)	30.5	12	32.5 (36)	22.5	4	38.3 (41.3)	—	–	–	–	–
ø63	27.5	14.5	39 (42.5)	26.5	13.5	49.8 (52.8)	26.5	13.5	44.8 (47.8)	29.5	16.5	39 (42.5)	21.5	8.5	44.8 (47.8)	—	–	–	–	–

*1: Dimensions in ( ) of FA are for L-shaped lead wire. *2: Bore size ø20 and layout port surface ø25 are for F-switch only.

Dimensions (rod side flange: FA)

● RCS2-FA-12/16

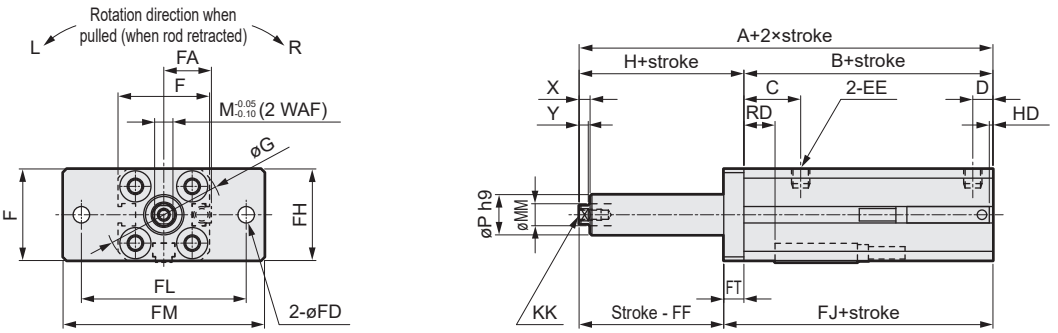

● RCS2-FA-20/25

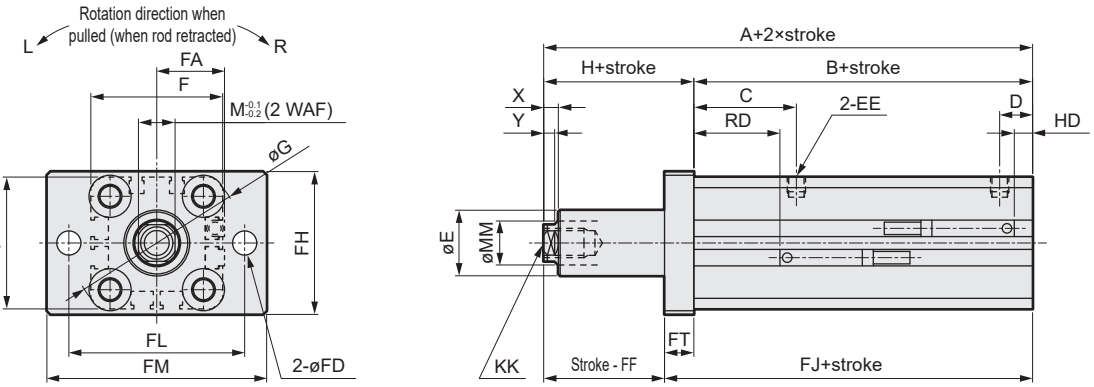

● RCS2-FA-32/40/50/63

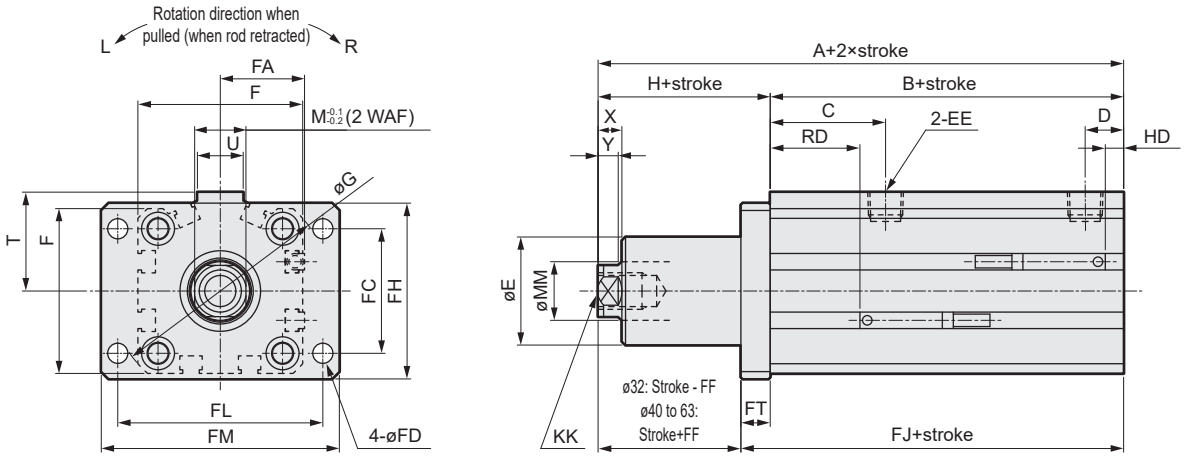

Code	Rod side flange (FA) dimensions table																								
Bore size	A	B	C	D	E	EE	F	G	H	KK	M	MM	P	T	U	X	Y	FC	FD	FF	FJ	FH	FL	FM	FT
ø12	33	28	15.5	5.5	—	M5 depth 4	25	32	5	M3 depth 5.5	5	6	11	—	–	3	2.5	—	4.5	0.5	33.5	25	45	55	5.5
ø16	33.5	28.5	15	5.5	—	M5 depth 4	29	38	5	M5 depth 6.5	7	8	14	—	–	3	2.5	—	4.5	0.6	34	30	45	55	5.5
ø20	53.5	52.5	28	9	17.9	M5 depth 4	36	47	1	M8 depth 11	10	12	—	–	–	4	3	—	6.6	7	60.5	39	48	60	8
ø25	54.5	53.5	27.5	10.5	22.5	M5 depth 4	40	51	1	M8 depth 11	10	12	—	–	–	4	3	—	6.6	7	61.5	42	52	64	8
ø32	63.5	56.5	31.5	10.5	29.5	Rc1/8	45	60	7	M10 depth 12	14	16	—	27	12.5	6.5	5.5	34	5.5	1	64.5	48	56	65	8
ø40	64.5	50	29	9	29.5	Rc1/8	52	69	14.5	M10 depth 12	14	16	—	31	15	6.5	5.5	40	5.5	6.5	58	54	62	72	8
ø50	74	57.5	34	11.5	36.5	Rc1/4	64	86	16.5	M12 depth 16	17	20	—	39	18	7.5	5.5	50	6.6	7.5	66.5	67	76	89	9
ø63	77	61	34.5	10.5	47.5	Rc1/4	77	103	16	M12 depth 16	17	20	—	45.5	23	7.5	5.5	60	9	7	70	80	92	108	9

Code	Switch model No.																			
	T2, T3, T3P, T0, T5			T1, T2YD, T2YDT			T2Y, T3Y, T2J			T2W, T3W			T8			F2S, F3S			F2, F3, F3P, F2Y, F3Y	
Bore size	RD	HD	FA	RD	HD	FA	RD	HD	FA	RD	HD	FA	RD	HD	FA	RD	HD	FA	RD	HD
ø12	8.5	0.5	13 (16.5)	—	–	–	–	–	–	10.5	2.5	13 (16.5)	—	–	–	–	–	–	–	–
ø16	9	0.5	15 (18.5)	—	–	–	–	–	–	11	2.5	15 (18.5)	—	–	–	–	–	–	–	–
ø20	23.5	10	18.5 (22)	22.5	9	29.3 (32.3)	22.5	9	24.3 (27.3)	25.5	12	18.5 (22)	17.5	4	24.3 (27.3)	27	13.5	31.5	28	14.5
ø25	24.5	9.5	20.5 (24)	23.5	8.5	31.3 (34.3)	23.5	8.5	26.3 (29.3)	26.5	11.5	20.5 (24)	18.5	3.5	26.3 (29.3)	28	13	33.5	29	14
ø32	26.5	10.5	23 (26.5)	25.5	9.5	33.8 (36.8)	25.5	9.5	28.8 (31.8)	28.5	12.5	23 (26.5)	20.5	4.5	28.8 (31.8)	—	–	–	–	–
ø40	23.5	7.5	26.5 (30)	22.5	6.5	37.3 (40.3)	22.5	6.5	32.3 (35.3)	25.5	9.5	26.5 (30)	17.5	1.5	32.3 (35.3)	—	–	–	–	–
ø50	28.5	10	32.5 (36)	27.5	9	43.3 (46.3)	27.5	9	38.3 (41.3)	30.5	12	32.5 (36)	22.5	4	38.3 (41.3)	—	–	–	–	–
ø63	27.5	14.5	39 (42.5)	26.5	13.5	49.8 (52.8)	26.5	13.5	44.8 (47.8)	29.5	16.5	39 (42.5)	21.5	8.5	44.8 (47.8)	—	–	–	–	–

*1: Dimensions in ( ) of FA are for L-shaped lead wire. *2: Bore size ø20 and layout port surface ø25 are for F-switch only.

LCM
LCR
LCG
LCW
LCX
STM
STG
STS/STL
STR2
UCA2
ULK*
JSK/M2
JSG
JSC3/JSC4
USSD
UFCD
USC
UB
JSB3
LMB
LML
HCM
HCA
LBC
CAC4
UCAC2
CAC-N
UCAC-N
RCS2
RCC2
PCC
SHC
MCP
GLC
MFC
BBS
RRC
GRC
RV3*
NHS
HRL
LN
Hand
Chuk
MecHnd/Chuk
ShkAbs
FJ
FK
SpdContr
Ending

Dimensions (head side flange: FB)

● RCS2-FB-12/16

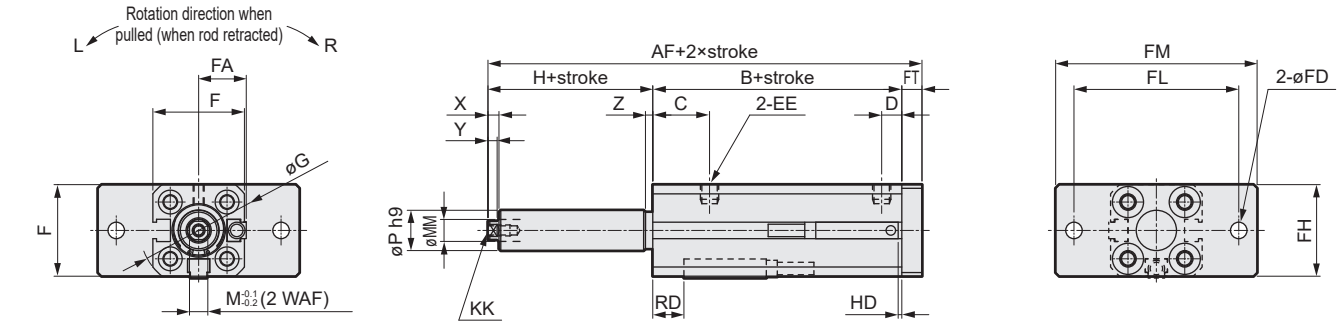

● RCS2-FB-20/25

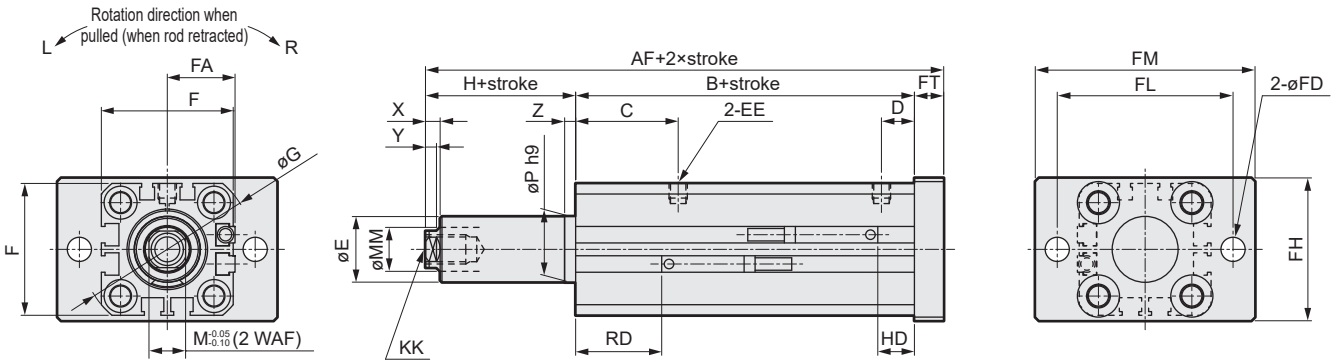

● RCS2-FB-32/40/50/63

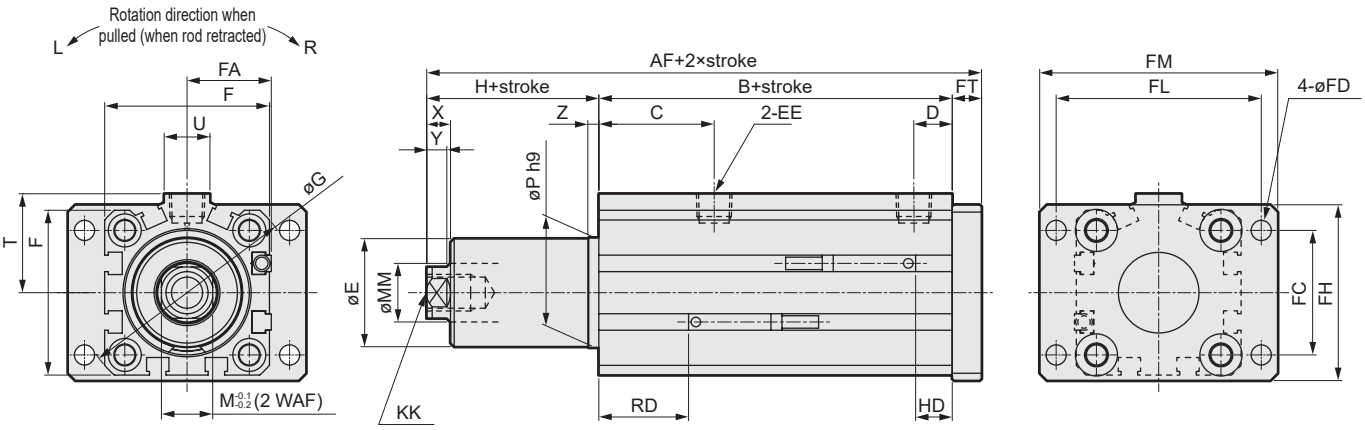

Code	Head side flange (FB) dimensions table																						
Bore size	AF	B	C	D	E	EE	F	G	H	KK	M	MM	P	T	U	X	Y	Z	FC	FD	FH	FL	FM	FT
ø12	38.5	28	15.5	5.5	—	M5 depth 4	25	32	5	M3 depth 5.5	5	6	11	—	–	3	2.5	2	—	4.5	25	45	55	5.5
ø16	39	28.5	15	5.5	—	M5 depth 4	29	38	5	M5 depth 6.5	7	8	14	—	–	3	2.5	2.2	—	4.5	30	45	55	5.5
ø20	61.5	52.5	28	9	17.9	M5 depth 4	36	47	1	M8 depth 11	10	12	18	—	–	4	3	3	—	6.6	39	48	60	8
ø25	62.5	53.5	27.5	10.5	22.5	M5 depth 4	40	51	1	M8 depth 11	10	12	23	—	–	4	3	3	—	6.6	42	52	64	8
ø32	71.5	56.5	31.5	10.5	29.5	Rc1/8	45	60	7	M10 depth 12	14	16	30	27	12.5	6.5	5.5	3	34	5.5	48	56	65	8
ø40	72.5	50	29	9	29.5	Rc1/8	52	69	14.5	M10 depth 12	14	16	30	31	15	6.5	5.5	3	40	5.5	54	62	72	8
ø50	83	57.5	34	11.5	36.5	Rc1/4	64	86	16.5	M12 depth 16	17	20	37	39	18	7.5	5.5	3.5	50	6.6	67	76	89	9
ø63	86	61	34.5	10.5	47.5	Rc1/4	77	103	16	M12 depth 16	17	20	48	45.5	23	7.5	5.5	3.5	60	9	80	92	108	9

Code	Switch model No.																			
	T2, T3, T3P, T0, T5			T1, T2YD, T2YDT			T2Y, T3Y, T2J			T2W, T3W			T8			F2S, F3S			F2, F3, F3P, F2Y, F3Y	
Bore size	RD	HD	FA	RD	HD	FA	RD	HD	FA	RD	HD	FA	RD	HD	FA	RD	HD	FA	RD	HD
ø12	8.5	0.5	13 (16.5)	—	–	–	–	–	–	10.5	2.5	13 (16.5)	—	–	–	–	–	–	–	–
ø16	9	0.5	15 (18.5)	—	–	–	–	–	–	11	2.5	15 (18.5)	—	–	–	–	–	–	–	–
ø20	23.5	10	18.5 (22)	22.5	9	29.3 (32.3)	22.5	9	24.3 (27.3)	25.5	12	18.5 (22)	17.5	4	24.3 (27.3)	27	13.5	31.5	28	14.5
ø25	24.5	9.5	20.5 (24)	23.5	8.5	31.3 (34.3)	23.5	8.5	26.3 (29.3)	26.5	11.5	20.5 (24)	18.5	3.5	26.3 (29.3)	28	13	33.5	29	14
ø32	26.5	10.5	23 (26.5)	25.5	9.5	33.8 (36.8)	25.5	9.5	28.8 (31.8)	28.5	12.5	23 (26.5)	20.5	4.5	28.8 (31.8)	—	–	–	–	–
ø40	23.5	7.5	26.5 (30)	22.5	6.5	37.3 (40.3)	22.5	6.5	32.3 (35.3)	25.5	9.5	26.5 (30)	17.5	1.5	32.3 (35.3)	—	–	–	–	–
ø50	28.5	10	32.5 (36)	27.5	9	43.3 (46.3)	27.5	9	38.3 (41.3)	30.5	12	32.5 (36)	22.5	4	38.3 (41.3)	—	–	–	–	–
ø63	27.5	14.5	39 (42.5)	26.5	13.5	49.8 (52.8)	26.5	13.5	44.8 (47.8)	29.5	16.5	39 (42.5)	21.5	8.5	44.8 (47.8)	—	–	–	–	–

*1: Dimensions in ( ) of FA are for L-shaped lead wire. *2: Bore size ø20 and layout port surface ø25 are for F-switch only.

Clamp lever dimensions

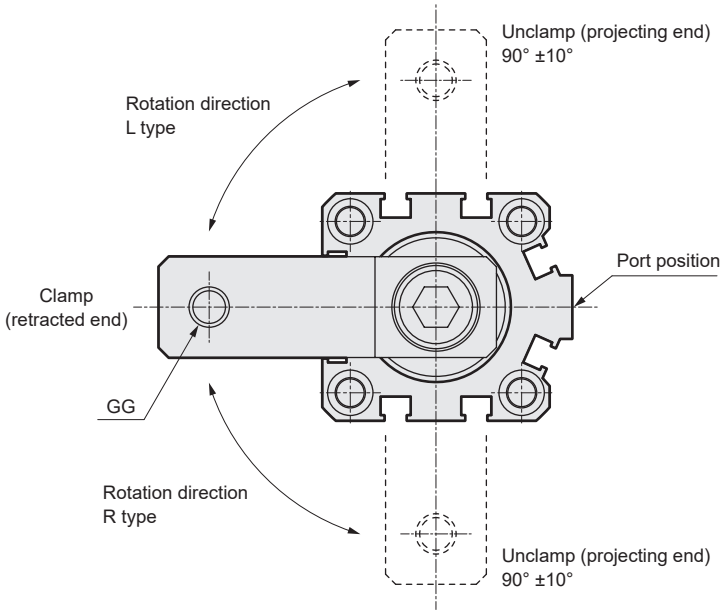

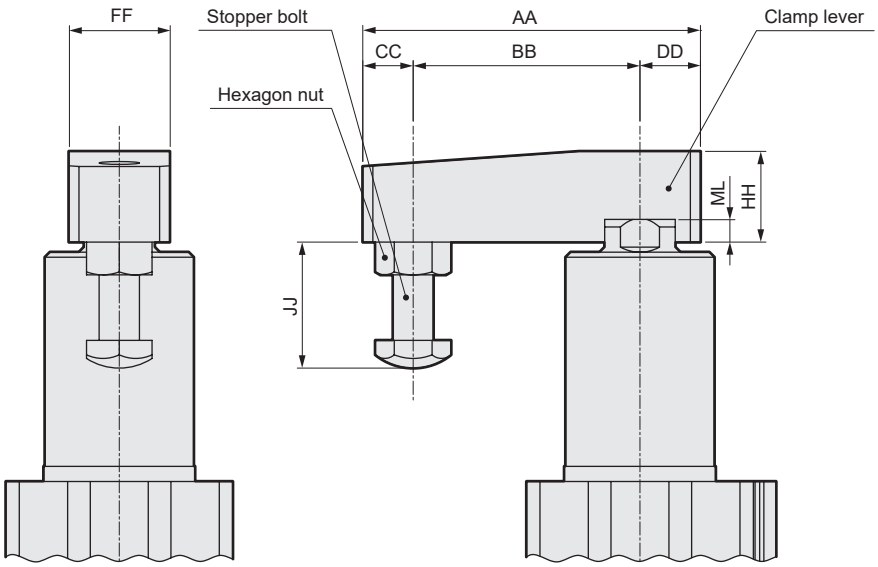

Code	With clamp lever									Moment of inertia (kg/m²)	
Bore size (mm)	AA	BB	CC	DD	FF	GG	HH	JJ	ML	Single clamp lever	With stopper bolt
ø12	29	20	4	5	8	M3x0.5	8	8 to 18	2	1.9×10^{-6}	2.7×10^{-6}
ø16	36	25	5	6	11	M4x0.7	11	8 to 18	2	7.3×10^{-6}	9.8×10^{-6}
ø20, 25	51	35	7	9	16	M6x1.0	14	12 to 22	2.5	3.6×10^{-5}	5×10^{-5}
ø32, 40	67	45	10	12	20	M8x1.25	18	15 to 25	4.5	1.3×10^{-4}	1.8×10^{-4}
ø50, 63	88	65	10	13	22	M10x1.5	22	30 to 40	4.5	4×10^{-4}	6.2×10^{-4}

Clamp lever, stopper bolt, and hexagon nut are made of steel.

Rotary clamp cylinder/single guide double acting/packing material fluoro rubber

RCS2-T2 Series

●Bore size: ø12/ø16/ø20/ø25/ø32/ø40/ø50/ø63

● Double acting

JIS symbol

RoHS

Specifications

1 MPa ≈ 145.0 psi, 1 MPa = 10 bar

Item		RCS2-T2							
Bore size	mm	ø12	ø16	ø20	ø25	ø32	ø40	ø50	ø63
Actuation		Double acting							
Working fluid		Compressed air							
Max. working pressure	MPa	1.0 (≈145 psi, 10 bar)							0.6 (≈87 psi, 6 bar)
Min. working pressure	MPa	0.2 (≈29 psi, 2 bar) (*1)					0.1 (≈15 psi, 1 bar)		
Proof pressure	MPa	1.6 (≈232 psi, 16 bar)							
Ambient temperature	°C	5 (41°F) to 60 (140°F)							
Port size	Rc, NPT, G	M5				1/8		1/4	
Stroke tolerance	mm	+1.0 0		+1.2 0					
Working piston speed	mm/s	50 to 200							
Cushion		Rod side: rubber cushioned, Head side: no cushioning							
Lubrication		Not required (use turbine oil class 1 ISO VG32 if necessary for lubrication)							
Turning ratio		90° ±10°							
Rotation direction		Right/Left							
Non-rotating accuracy (clamping, default value)		±1.4°	±1.2°			±0.9°		±0.7°	
Pressurized area mm²	Pull side	84	150	201	377	603	1056	1649	2803
	Push side	113	201	314	490	804	1256	1963	3117

*1: With constant pressurization

Stroke

Bore size (mm)	Stroke (mm)	Rotary stroke *1 (mm)	Clamp stroke *2 (mm)
ø12, ø16	17.5, 27.5, 37.5	7.5	10, 20, 30
ø20, ø25	19.5, 29.5, 39.5	9.5	10, 20, 30
ø32, ø40	25, 35, 45, 65	15	10, 20, 30, 50
ø50, ø63	29, 39, 49, 69	19	10, 20, 30, 50

*1: The rotary stroke is the dimension of forward action when rotating from the unclamp end in the clamping direction.
*2: The clamp stroke is the dimension of forward action in the clamping direction after rotation.

Rotating angle/rotation direction/non-rotating accuracy

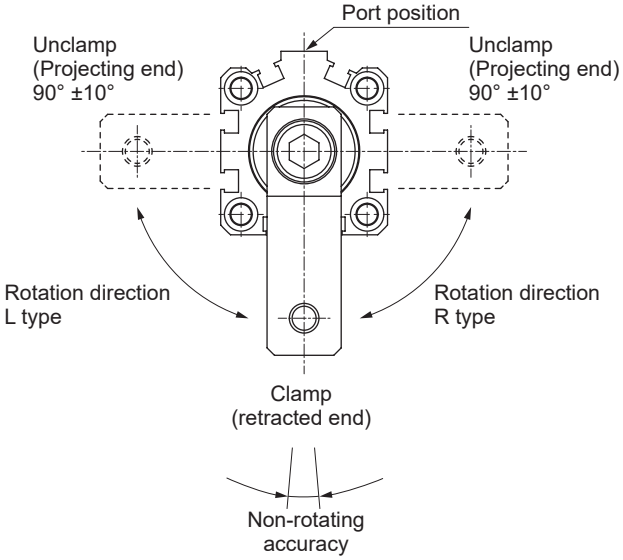

Switch specifications (T-switch)

● 1-color/2-color LED/for AC magnetic field

Item	Proximity 2-wire	Proximity 2-wire			Proximity 3-wire				Reed 2-wire							Proximity 2-wire
	T1H/T1V	T2H/T2V	T2YH/T2YV	T2WH/T2WV	T3H/T3V	T3PH/T3PV	T3YH/T3YV	T3WH/T3WV	T0H/T0V		T5H/T5V		T8H/T8V			T2YD (*2)
Applications	Programmable controller For relay, compact solenoid valve	Dedicated for programmable controller			Programmable controller, For relay				Programmable controller, For relay		Programmable controller, relay/IC circuit (no indicator lamp), for serial connection		For programmable controller, relay			Dedicated for programmable controller
Output method	-				NPN output	PNP output	NPN output	NPN output	-							
Power supply voltage	-				10 to 28 VDC				-							
Load voltage	85 to 265 VAC	10 to 30 VDC		24 VDC ±10%	30 VDC or less				12/24 VDC	100/110 VAC	5/12/24 VDC	100/110 VAC	12/24 VDC	110 VAC	220 VAC	24 VDC ±10%
Load current	5 to 100mA	5 to 20mA(*1)			100 mA or less		50 mA or less		5 to 50mA	7 to 20mA	50 mA or less	20 mA or less	5 to 50mA	7 to 20mA	7 to 10mA	5 to 20 mA (*1)
Indicator lamp	LED (Lit when ON)	LED (Lit when ON)	Red/green LED (Lit when ON)	Red/green LED (Lit when ON)	LED (Lit when ON)	Yellow LED (Lit when ON)	Red/green LED (Lit when ON)	Red/green LED (Lit when ON)	LED (Lit when ON)		No indicator lamp		LED (Lit when ON)			Red/green LED (Lit when ON)
Leakage current	1 mA or less with 100 VAC, 2 mA or less with 200 VAC	1 mA or less			10 μA or less				0mA							1 mA or less
Weight g	1 m: 33 3 m: 87 5 m: 142	1 m: 18 3 m: 49 5 m: 80	1 m: 33 3 m: 87 5 m: 142	1 m: 18 3 m: 49 5 m: 80	1 m: 18 3 m: 49 5 m: 80		1 m: 33 3 m: 87 5 m: 142	1 m: 18 3 m: 49 5 m: 80	1 m: 18 3 m: 49 5 m: 80				1 m: 33 3 m: 87 5 m: 142			1 m: 61 3 m: 166 5 m: 272

*1: The above max. load current is 20 mA at 25°C. The current is lower than 20 mA if the operating ambient temperature around the switch is higher than 25˚C. (5 to 10 mA at 60°C)
*2: Switch for AC magnetic field (T2YD) cannot be used in direct-current magnetic field.

Switch specifications (F-switch)

● 1Color/2-colorIndicator

Item	Proximity 2-wire	Proximity 3-wire	Proximity 2-wire		Proximity 3-wire		
	F2S	F3S	F2H/F2V	F2YH/F2YV	F3H/F3V	F3PH/F3PV (Made to order)	F3YH/F3YV
Applications	Programmable controller dedicated	For programmable controller, relay	Programmable controller dedicated		For programmable controller, relay		
Output method	-	NPN output	-		NPN output	PNP output	NPN output
Power supply voltage	-	10 to 28 VDC	-		10 to 28 VDC	4.5 to 28 VDC	10 to 28 VDC
Load voltage	10 to 30 VDC	30 VDC or less	10 to 30 VDC	24 VDC ±10%	30 VDC or less		
Load current	5 to 20mA	50 mA or less	5 to 20mA		100 mA or less	50 mA or less	
Indicator lamp	LED (Lit when ON)		Yellow LED (Lit when ON)	Red/green LED (Lit when ON)	Yellow LED (Lit when ON)		Red/green LED (Lit when ON)
Leakage current	1 mA or less	10 μA or less	1 mA or less		10 μA or less		
Weight g	1 m: 10 3 m: 29						

*1: The F-switch uses a bend-resistant lead wire.

Cylinder weight

(Unit: g)

Bore size(mm)	Stroke (mm)														Rod side flange(FA)	Head side flange(FB)	Switch weight
	17.5	19.5	25	29	27.5	29.5	35	39	37.5	39.5	45	49	65	69			
ø12	69				84				99						49	49	Refer to the weight in the switch specifications above.
ø16	100				123				146						59	59	
ø20		212				252				292					114	114	
ø25		267				314				361					125	125	
ø32			333				372				411		489		145	145	
ø40			554				629				704		854		193	193	
ø50				997				1118				1239		1481	335	335	
ø63				1373				1526				1679		1985	464	464	

Theoretical thrust table

(Unit: N)

Bore size (mm)	Operating direction	Working pressure MPa									
		0.1	0.2	0.3	0.4	0.5	0.6	0.7	0.8	0.9	1.0
ø12	Push	-	22.6	33.9	45.2	56.5	67.9	79.2	90.5	1.02×10^2	1.13×10^2
	Pull	-	17.0	25.4	33.9	42.4	50.9	59.4	67.9	76.3	84.8
ø16	Push	-	40.2	60.3	80.4	1.01×10^2	1.21×10^2	1.41×10^2	1.61×10^2	1.81×10^2	2.01×10^2
	Pull	-	30.2	45.2	60.3	75.4	90.5	1.06×10^2	1.21×10^2	1.36×10^2	1.51×10^2
ø20	Push	-	62.8	94.2	1.26×10^2	1.57×10^2	1.88×10^2	2.20×10^2	2.51×10^2	2.83×10^2	3.14×10^2
	Pull	-	40.2	60.3	80.4	1.01×10^2	1.21×10^2	1.41×10^2	1.61×10^2	1.81×10^2	2.01×10^2
ø25	Push	-	98.2	1.47×10^2	1.96×10^2	2.45×10^2	2.95×10^2	3.44×10^2	3.93×10^2	4.42×10^2	4.91×10^2
	Pull	-	75.6	1.13×10^2	1.51×10^2	1.89×10^2	2.27×10^2	2.64×10^2	3.02×10^2	3.40×10^2	3.78×10^2
ø32	Push	-	1.61×10^2	2.41×10^2	3.22×10^2	4.02×10^2	4.83×10^2	5.63×10^2	6.43×10^2	7.24×10^2	8.04×10^2
	Pull	-	1.21×10^2	1.81×10^2	2.41×10^2	3.02×10^2	3.62×10^2	4.22×10^2	4.83×10^2	5.43×10^2	6.03×10^2
ø40	Push	1.26×10^2	2.51×10^2	3.77×10^2	5.03×10^2	6.28×10^2	7.54×10^2	8.80×10^2	1.01×10^3	1.13×10^3	1.26×10^3
	Pull	1.06×10^2	2.11×10^2	3.17×10^2	4.22×10^2	5.28×10^2	6.33×10^2	7.39×10^2	8.44×10^2	9.50×10^2	1.06×10^3
ø50	Push	1.96×10^2	3.93×10^2	5.89×10^2	7.85×10^2	9.82×10^2	1.18×10^3	1.37×10^3	1.57×10^3	1.77×10^3	1.96×10^3
	Pull	1.65×10^2	3.30×10^2	4.95×10^2	6.60×10^2	8.25×10^2	9.90×10^2	1.15×10^3	1.32×10^3	1.48×10^3	1.65×10^3
ø63	Push	3.12×10^2	6.23×10^2	9.35×10^2	1.25×10^3	1.56×10^3	1.87×10^3	-	-	-	-
	Pull	2.80×10^2	5.61×10^2	8.41×10^2	1.12×10^3	1.40×10^3	1.68×10^3	-	-	-	-

LCM
LCR
LCG
LCW
LCX
STM
STG
STS/STL
STR2
UCA2
ULK*
JSK/M2
JSG
JSC3/JSC4
USSD
UFCD
USC
UB
JSB3
LMB
LML
HCM
HCA
LBC
CAC4
UCAC2
CAC-N
UCAC-N
RCS2
RCC2
PCC
SHC
MCP
GLC
MFC
BBS
RRC
GRC
RV3*
NHS
HRL
LN
Hand
Chuk
MecHnd/Chuk
ShkAbs
FJ
FK
SpdContr
Ending

How to order

Without switch (built-in magnet for switch)

RCS2-T2 - 00 - 12 ◯ - 17.5 - R ———— H A

With switch (built-in magnet for switch)

RCS2-T2 - 00 - 12 ◯ - 17.5 - R - T0H - D - H A

Ⓐ Mounting
Ⓑ Bore size
Ⓒ Port thread
Ⓓ Stroke
Ⓔ Rotation direction
Ⓕ Switch model No.
Ⓖ Switch quantity
Ⓗ Option *1
Ⓘ Accessory

Code	Description
Ⓐ Mounting	
00	Basic
FA	Rod side flange
FB	Head side flange
Ⓑ Bore size (mm)	
12	ø12
16	ø16
20	ø20
25	ø25
32	ø32
40	ø40
50	ø50
63	ø63
Ⓒ Port thread	
Blank	Rc thread (M5 for ø25 and less)
N	NPT thread (ø32 and over)
G	G thread (ø32 and over)
Ⓓ Stroke (mm)	
Refer to the stroke table on the following page.	
Ⓔ Rotation direction	See the following page for details.
R	Rotates 90° in CW direction when retracted
L	Rotates 90° in CCW direction when retracted

Ⓕ Switch model No.

Straight Lead wire	L-shaped Lead wire	Contact	Voltage AC	Voltage DC	Indicator	Lead wire	Bore size 12	16	20	25	32	40	50	63
T0H*	T0V*	Reed	●	●	1-color LED	2-wire	●	●	●	●	●	●	●	●
T5H*	T5V*	Reed	●	●	No indicator lamp	2-wire	●	●	●	●	●	●	●	●
T8H*	T8V*	Reed	●	●	1-color LED				●	●	●	●	●	●
T1H*	T1V*	Proximity	●		1-color LED	2-wire			●	●	●	●	●	●
T2H*	T2V*	Proximity		●	1-color LED	2-wire	●	●	●	●	●	●	●	●
T3H*	T3V*	Proximity		●	1-color LED	3-wire	●	●	●	●	●	●	●	●
T3PH*	T3PV*	Proximity		●	1-color LED (PNP output)	3-wire	●	●	●	●	●	●	●	●
T2WH*	T2WV*	Proximity		●	2-color LED	2-wire	●	●	●	●	●	●	●	●
T2YH*	T2YV*	Proximity		●	2-color LED	2-wire			●	●	●	●	●	●
T3WH*	T3WV*	Proximity		●	2-color LED	3-wire	●	●	●	●	●	●	●	●
T3YH*	T3YV*	Proximity		●	2-color LED	3-wire			●	●	●	●	●	●
T2YD*	-	Proximity		●	2-color LED AC magnetic field	2-wire			●	●	●	●	●	●
T2YDT*	-	Proximity		●	2-color LED AC magnetic field	2-wire			●	●	●	●	●	●
T2JH*	T2JV*	Proximity		●	1-color LED off-delay	2-wire			●	●	●	●	●	●
F2S*		Proximity		●	1-color LED	2-wire			●	●				
F3S*		Proximity		●	1-color LED	3-wire			●	●				
F2H*	F2V*	Proximity		●	1-color LED	2-wire			●	●				
F3H*	F3V*	Proximity		●	1-color LED	3-wire			●	●				
F3PH*	F3PV*	Proximity		●	1-color LED (PNP output) (made to order)	3-wire			●	●				
F2YH*	F2YV*	Proximity		●	2-color LED	2-wire			●	●				
F3YH*	F3YV*	Proximity		●	2-color LED	3-wire			●	●				

* Lead wire length	
Blank	1 m (standard)
3	3 m (option)
5	5 m (option) *2

Ⓖ Switch quantity	
R	1 on rod side
H	1 on head side
D	With both sides

Ⓗ Option	
Blank	No option
H	Spigot at head side

Ⓘ Accessory (included at shipment)	
Blank	No accessories
A	Clamp lever

Precautions for model No. selection

*1: For Ⓐ Mounting format "FA" or "FB", Ⓗ Option "H" cannot be selected.
*2: F-switch cannot be selected.

[Example of model No.]

RCS2-T2-00-12-17.5-R-T0H-D-HA

Model: Rotary clamp cylinder/double acting/packing material fluoro rubber

Ⓐ Mounting : Basic
Ⓑ Bore size : ø12 mm
Ⓒ Port thread : M5
Ⓓ Stroke : 17.5 mm
Ⓔ Rotation direction : Rotates 90° in CW direction when retracted
Ⓕ Switch model No. : Reed T0H switch, lead wire 1 m
Ⓖ Switch quantity : With both sides
Ⓗ Option : Spigot at head side
Ⓘ Accessory : Clamp lever

[Stroke table]

Stroke	Bore size								Rotation stroke	Clamp stroke
	12	16	20	25	32	40	50	63		
17.5	●	●							7.5	10
19.5			●	●					9.5	10
25					●	●			15	10
29							●	●	19	10
27.5	●	●							7.5	20
29.5			●	●					9.5	20
35					●	●			15	20
39							●	●	19	20
37.5	●	●							7.5	30
39.5			●	●					9.5	30
45					●	●			15	30
49							●	●	19	30
65					●	●			15	50
69							●	●	19	50

[Rotation direction]

R	Rotates 90° in CW direction when retracted	L	Rotates 90° in CCW direction when retracted

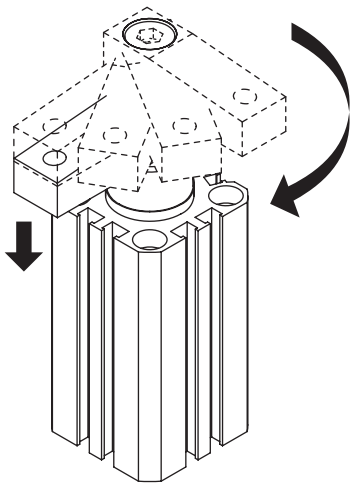

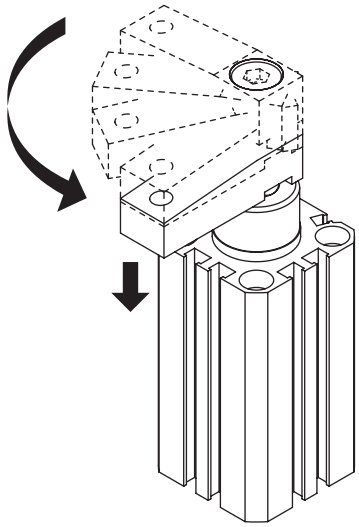

Discrete switch model No.

SW - T0H3

Switch model No.
(Item Ⓕ on page 1080)

Flange kit model No.

RCS2 - FA - 12

Bore size
(Item Ⓑ on page 1080)

Clamp lever kit model No.

RCS2 - A - 12

Code	Applicable bore size
12	ø12
16	ø16
20	ø20, ø25
32	ø32, ø40
50	ø50, ø63

* Dimensions are the same as the RCS2 Series basic shape. Refer to pages 1074 to 1077.

Internal structure and parts list (ø12, ø16, ø20, ø25)

● RCS2-T2-12/16

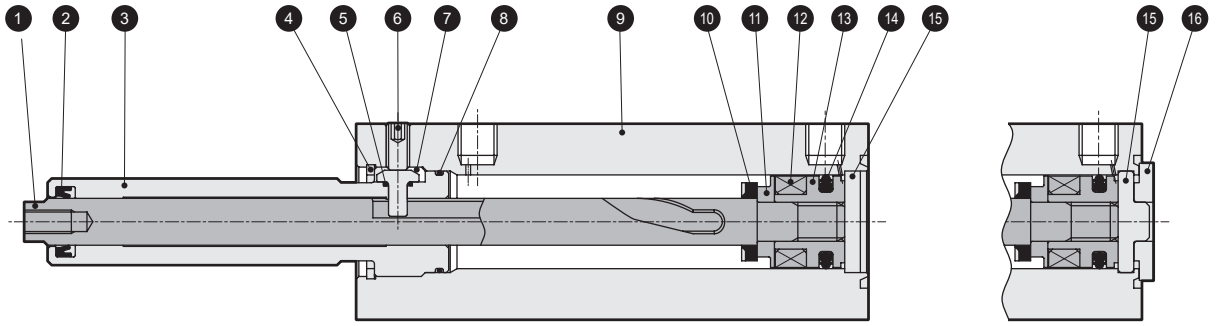

Spigot at head side (H)

No.	Part name	Material	Remarks	No.	Part name	Material	Remarks
1	Piston rod	Stainless steel	Special treatment	10	Cushion rubber (R)	Urethane rubber	
2	Rod packing	Fluoro rubber		11	Spacer	ø12: Aluminum alloy	Zinc chromate
3	Rod metal	Aluminum alloy	Hard alumite			ø16: Special plastic	
4	Round R type snap ring	Steel	Zinc phosphate	12	Magnet	Plastic	
5	Guide pin gasket	Fluoro rubber		13	Piston	Aluminum alloy	Zinc chromate
6	Hexagon socket set screw	Stainless steel		14	Piston packing	Fluoro rubber	
7	Guide pin	Steel	Special treatment	15	Cover	Stainless steel	
8	Rod metal gasket	Fluoro rubber		16	Spigot ring	Aluminum alloy	Zinc chromate
9	Body	Aluminum alloy	Hard alumite				

● RCS2-T2-20/25

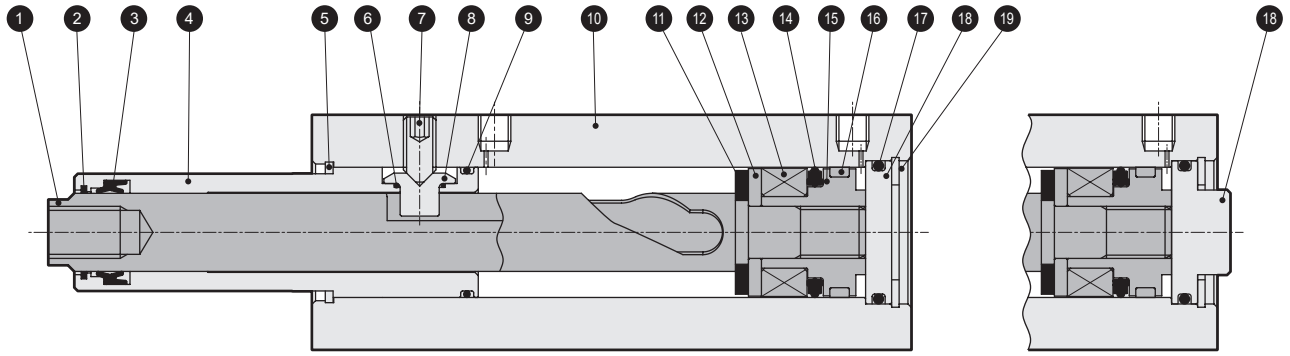

Spigot at head side (H)

No.	Part name	Material	Remarks	No.	Part name	Material	Remarks
1	Piston rod	Stainless steel	Special treatment	11	Cushion rubber (R)	Urethane rubber	
2	Coil scraper	Copper alloy		12	Spacer	Aluminum alloy	Zinc chromate
3	Rod packing	Fluoro rubber		13	Magnet	Plastic	
4	Rod metal	Aluminum alloy	Hard alumite	14	Piston packing	Fluoro rubber	
5	Circlip	Steel		15	Piston	Aluminum alloy	Zinc chromate
6	Guide pin gasket	Fluoro rubber		16	Wear ring	Polyacetal resin	
7	Hexagon socket set screw	Stainless steel		17	Cover gasket	Fluoro rubber	
8	Guide pin	Steel	Special treatment	18	Base plate	Aluminum alloy	Zinc chromate
9	Rod metal gasket	Fluoro rubber		19	C-snap ring	Steel	Zinc phosphate
10	Body	Aluminum alloy	Hard alumite				

Consumable parts list

● Packing kit

Bore size (mm)	Kit No.	Consumable parts No.
ø12	RCS2-T2-12K	2 5 8 10 14
ø16	RCS2-T2-16K	
ø20	RCS2-T2-20K	2 3 6 9 11 14 16 17
ø25	RCS2-T2-25K	

● Guide pin kit

Bore size (mm)	Kit No.	Consumable parts No.
ø12	RCS2-G-12	6 7
ø16	RCS2-G-16	
ø20	RCS2-G-20	7 8
ø25	RCS2-G-25	

Internal structure and parts list (ø32, ø40, ø50, ø63)

● RCS2-T2-32

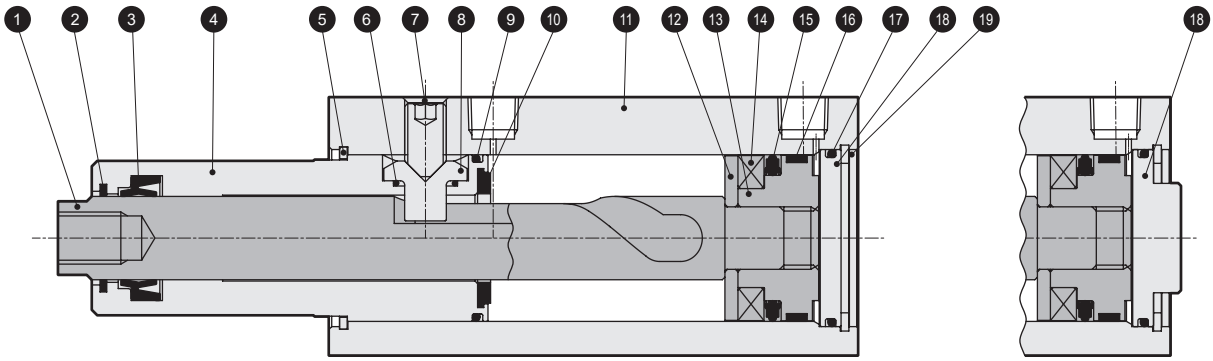

Spigot at head side (H)

No.	Part name	Material	Remarks	No.	Part name	Material	Remarks
1	Piston rod	Stainless steel	Special treatment	11	Body	Aluminum alloy	Hard alumite
2	Coil scraper	Copper alloy		12	Spacer	Aluminum alloy	
3	Rod packing	Fluoro rubber		13	Piston	Aluminum alloy	Zinc chromate
4	Rod metal	Aluminum alloy	Hard alumite	14	Magnet	Plastic	
5	Circlip	Steel		15	Piston packing	Fluoro rubber	
6	Guide pin gasket	Fluoro rubber		16	Wear ring	Polyacetal resin	
7	Hexagon socket set screw	Stainless steel		17	Cover gasket	Fluoro rubber	
8	Guide pin	Steel	Special treatment	18	Base plate	Aluminum alloy	Zinc chromate
9	Rod metal gasket	Fluoro rubber		19	C-snap ring	Steel	Zinc phosphate
10	Cushion rubber (R)	Urethane rubber					

● RCS2-T2-40/50/63

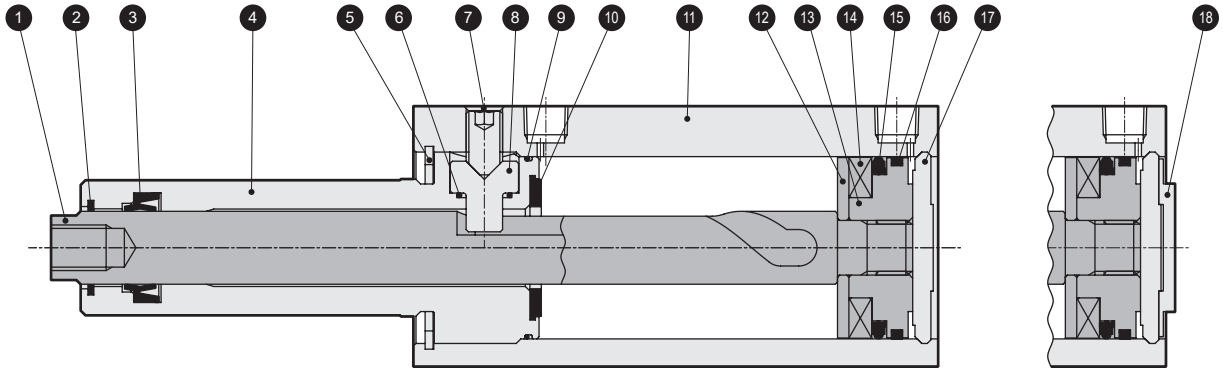

Spigot at head side (H)

No.	Part name	Material	Remarks	No.	Part name	Material	Remarks
1	Piston rod	Stainless steel	Special treatment	10	Cushion rubber (R)	Urethane rubber	
2	Coil scraper	Copper alloy		11	Body	Aluminum alloy	Hard alumite
3	Rod packing	Fluoro rubber		12	Spacer	Aluminum alloy	
4	Rod metal	Aluminum alloy	Hard alumite	13	Piston	Aluminum alloy	Zinc chromate
5	C-snap ring	Steel	Zinc phosphate	14	Magnet	Plastic	
6	Guide pin gasket	Fluoro rubber		15	Piston packing	Fluoro rubber	
7	Hexagon socket set screw	Stainless steel		16	Wear ring	Polyacetal resin	
8	Guide pin	Steel	Special treatment	17	Cover	Aluminum alloy	
9	Rod metal gasket	Fluoro rubber		18	Spigot ring	Aluminum alloy	Zinc chromate

Consumable parts list

● Packing kit

Bore size (mm)	Kit No.	Consumable parts No.
ø32	RCS2-T2-32K	2 3 6 9 10 15 16 17
ø40	RCS2-T2-40K	2 3 6 9 10 15 16
ø50	RCS2-T2-50K	
ø63	RCS2-T2-63K	

● Guide pin kit

Bore size (mm)	Kit No.	Consumable parts No.
ø32	RCS2-G-32	7 8
ø40	RCS2-G-40	7 8
ø50	RCS2-G-50	
ø63	RCS2-G-63	

Rotary clamp cylinder/single guide double acting/anti-spatter adherence

RCS2-G4 Series

● Bore size: ø32/ø40/ø50/ø63

● Double acting

JIS symbol

RoHS

Specifications

1 MPa ≈ 145.0 psi, 1 MPa = 10 bar

Item		RCS2-G4			
Bore size	mm	ø32	ø40	ø50	ø63
Actuation		Double acting			
Working fluid		Compressed air			
Max. working pressure	MPa	1.0 (≈145 psi, 10 bar)			0.6 (≈87 psi, 6 bar)
Min. working pressure	MPa	0.1 (≈15 psi, 1 bar)			
Proof pressure	MPa	1.6 (≈232 psi, 16 bar)			
Ambient temperature	°C	-10 (14°F) to 60 (140°F) (no freezing)			
Port size	Rc, NPT, G	1/8		1/4	
Stroke tolerance	mm	+1.2 0			
Working piston speed	mm/s	50 to 200			
Cushion		Rod side: rubber cushioned, Head side: no cushioning			
Lubrication		Not required (use turbine oil class 1 ISO VG32 if necessary for lubrication)			
Turning ratio		90° ±10°			
Rotation direction		Right/Left			
Non-rotating accuracy (clamping, default value)		±0.9°		±0.7°	
Pressurized area mm²	Pull side	603	1056	1649	2803
	Push side	804	1256	1963	3117

*1: With constant pressurization

Stroke

Bore size (mm)	Stroke (mm)	Rotary stroke *1 (mm)	Clamp stroke *2 (mm)
ø32, ø40	25, 35, 45, 65	15	10, 20, 30, 50
ø50, ø63	29, 39, 49, 69	19	10, 20, 30, 50

*1: The rotary stroke is the dimension of forward action when rotating from the unclamp end in the clamping direction.
*2: The clamp stroke is the dimension of forward action in the clamping direction after rotation.

Rotating angle/rotation direction/non-rotating accuracy

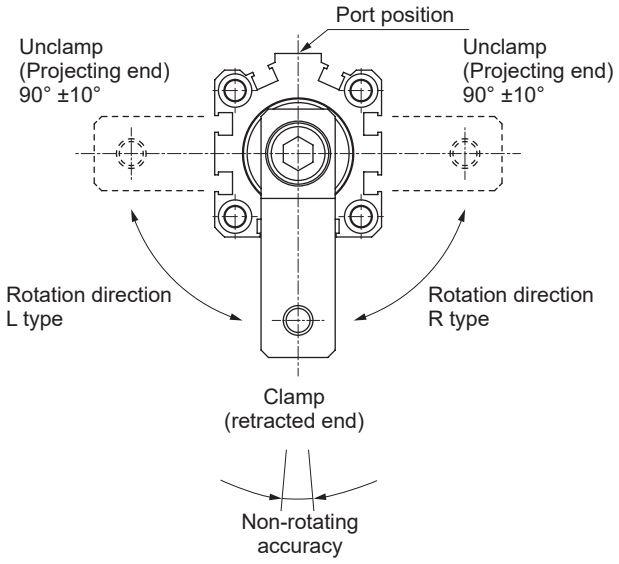

LCM
LCR
LCG
LCW
LCX
STM
STG
STS/STL
STR2
UCA2
ULK*
JSK/M2
JSG
JSC3/JSC4
USSD
UFCD
USC
UB
JSB3
LMB
LML
HCM
HCA
LBC
CAC4
UCAC2
CAC-N
UCAC-N
RCS2
RCC2
PCC
SHC
MCP
GLC
MFC
BBS
RRC
GRC
RV3*
NHS
HRL
LN
Hand
Chuk
MecHnd/Chuk
ShkAbs
FJ
FK
SpdContr
Ending

Switch specifications

Item	Proximity 2-wire	
	T2YD	T2YDT
Applications	Dedicated for programmable controller	
Indicator	Red/green LED (Lit when ON)	
Load voltage	24 VDC ±10%	
Load current	5 to 20 mA DC (*1)	
Internal voltage drop	6 V or less	
Leakage current	1.0 mA or less	
Output delay time *2 (ON delay, OFF delay)	60 ms or less	
Lead wire length *3	1 m (oil resistant vinyl cabtyre cable 2-conductor 0.5 mm²)	1 m (flame-resistant vinyl cabtyre cable 2-conductor 0.5 mm²)
Insulation resistance	100 MΩ or more at 500 VDC megger	
Withstand voltage	No failure after 1 minute of 1,000 VAC application.	
Impact resistance	980 m/s²	
Ambient temperature	-10 to +60°C	
Degree of protection	JIS C0920 (water-tight), IEC standards IP67, oil resistance	
Weight g	1 m: 61 3 m: 166 5 m: 272	

*1 : The above max. load current is 20 mA at 25°C. The current is lower than 20 mA if the operating ambient temperature around the switch is higher than 25˚C. (5 to 10 mA at 60°C)
*2 : Indicates the time from magnetic sensor detection of the piston magnet until switch output.
*3 : 3 m and 5 m lead wires are available as options.
*4 : This switch cannot be used in DC magnetic fields.

Cylinder weight

(Unit: g)

Bore size (mm)	Stroke (mm)								Rod side flange (FA)	Head side flange (FB)	Switch weight
	25	29	35	39	45	49	65	69			
ø32	333		372		411		489		145	145	Refer to the weight in the switch specifications above.
ø40	554		629		704		854		193	193	
ø50		997		1118		1239		1481	335	335	
ø63		1373		1526		1679		1985	464	464	

Theoretical thrust table

(Unit: N)

Bore size (mm)	Operating direction	Working pressure MPa									
		0.1	0.2	0.3	0.4	0.5	0.6	0.7	0.8	0.9	1.0
ø32	Push	80.4	1.61×10^2	2.41×10^2	3.22×10^2	4.02×10^2	4.83×10^2	5.63×10^2	6.43×10^2	7.24×10^2	8.04×10^2
	Pull	60.3	1.21×10^2	1.81×10^2	2.41×10^2	3.02×10^2	3.62×10^2	4.22×10^2	4.83×10^2	5.43×10^2	6.03×10^2
ø40	Push	1.26×10^2	2.51×10^2	3.77×10^2	5.03×10^2	6.28×10^2	7.54×10^2	8.80×10^2	1.01×10^3	1.13×10^3	1.26×10^3
	Pull	1.06×10^2	2.11×10^2	3.17×10^2	4.22×10^2	5.28×10^2	6.33×10^2	7.39×10^2	8.44×10^2	9.50×10^2	1.06×10^3
ø50	Push	1.96×10^2	3.93×10^2	5.89×10^2	7.85×10^2	9.82×10^2	1.18×10^3	1.37×10^3	1.57×10^3	1.77×10^3	1.96×10^3
	Pull	1.65×10^2	3.30×10^2	4.95×10^2	6.60×10^2	8.25×10^2	9.90×10^2	1.15×10^3	1.32×10^3	1.48×10^3	1.65×10^3
ø63	Push	3.12×10^2	6.23×10^2	9.35×10^2	1.25×10^3	1.56×10^3	1.87×10^3	–	–	–	–
	Pull	2.80×10^2	5.61×10^2	8.41×10^2	1.12×10^3	1.40×10^3	1.68×10^3	–	–	–	–

LCM
LCR
LCG
LCW
LCX
STM
STG
STS/STL
STR2
UCA2
ULK*
JSK/M2
JSG
JSC3/JSC4
USSD
UFCD
USC
UB
JSB3
LMB
LML
HCM
HCA
LBC
CAC4
UCAC2
CAC-N
UCAC-N
RCS2
RCC2
PCC
SHC
MCP
GLC
MFC
BBS
RRC
GRC
RV3*
NHS
HRL
LN
Hand
Chuk
MecHnd/Chuk
ShkAbs
FJ
FK
SpdContr
Ending

How to order

Without switch (built-in magnet for switch)

RCS2-G4 - 00 - 32 ◯ - 25 - R ———— H A

With switch (built-in magnet for switch)

RCS2-G4 - 00 - 32 ◯ - 25 - R - T2YD3 - D - H A

Ⓐ Mounting

Ⓑ Bore size

Ⓒ Port thread

Ⓓ Stroke

Ⓔ Rotation direction

Ⓕ Switch model No.

Ⓖ Switch quantity

Ⓗ Option *1

Ⓘ Accessory

Code	Description
Ⓐ Mounting	
00	Basic
FA	Rod side flange
FB	Head side flange

Ⓑ Bore size (mm)	
32	ø32
40	ø40
50	ø50
63	ø63

Ⓒ Port thread	
Blank	Rc thread
N	NPT thread
G	G thread

Ⓓ Stroke (mm)

Stroke	Bore size				Rotation stroke	Clamp stroke
	32	40	50	63		
25	●	●			15	10
29			●	●	19	10
35	●	●			15	20
39			●	●	19	20
45	●	●			15	30
49			●	●	19	30
65	●	●			15	50
69			●	●	19	50

Ⓔ Rotation direction See the following page for details.

R	Rotates 90° in CW direction when retracted
L	Rotates 90° in CCW direction when retracted

Ⓕ Switch model No.

Lead wire Straight	Contact	Voltage	Indicator	Lead wire
T2YD*	Proximity	DC	2-color LED Strong magnetic field proof (Dedicated for AC magnetic field)	2-wire
T2YDT*				2-wire (Flame-resistant cable)

*** Lead wire length**	
Blank	1 m (standard)
3	3 m (option)
5	5 m (option)

Ⓖ Switch quantity	
R	1 on rod side
H	1 on head side
D	With both sides

Ⓗ Option	
Blank	No option
H	Spigot at head side

Ⓘ Accessory (included at shipment)	
Blank	No accessories
A	Clamp lever

Precautions for model No. selection

*1: For Ⓐ Mounting format "FA" or "FB", Ⓗ Option "H" cannot be selected.

[Example of model No.]

RCS2-G4-00-32-25-R-T2YD3-D-HA

Model: Rotary clamp cylinder/double acting/ anti-spatter adherence

Ⓐ Mounting : Basic
Ⓑ Bore size : ø32 mm
Ⓒ Port thread : Rc thread
Ⓓ Stroke : 25 mm
Ⓔ Rotation direction : Rotates 90° in CW direction when retracted
Ⓕ Switch model No. : Proximity T2YD switch, lead wire 3 m
Ⓖ Switch quantity : With both sides
Ⓗ Option : Spigot at head side
Ⓘ Accessory : Clamp lever

[Rotation direction]

R	Rotates 90° in CW direction when retracted	L	Rotates 90° in CCW direction when retracted

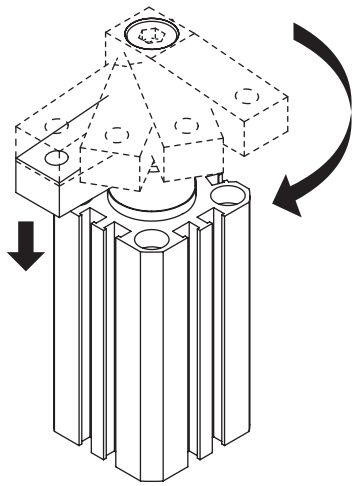

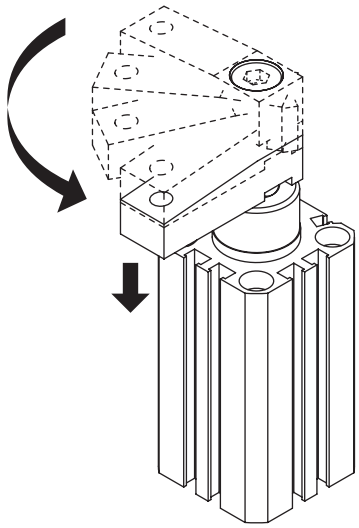

Discrete switch model No.

SW - T2YD3

Switch model No.
(Item Ⓕ on page 1086)

Flange kit model No.

RCS2 - FA - 32

Bore size
(Item Ⓑ on page 1086)

Clamp lever kit model No.

RCS2 - A - 32

Code	Applicable bore size
32	ø32, ø40
50	ø50, ø63

LCM
LCR
LCG
LCW
LCX
STM
STG
STS/STL
STR2
UCA2
ULK*
JSK/M2
JSG
JSC3/JSC4
USSD
UFCD
USC
UB
JSB3
LMB
LML
HCM
HCA
LBC
CAC4
UCAC2
CAC-N
UCAC-N
RCS2
RCC2
PCC
SHC
MCP
GLC
MFC
BBS
RRC
GRC
RV3*
NHS
HRL
LN
Hand
Chuk
MecHnd/Chuk
ShkAbs
FJ
FK
SpdContr
Ending

Internal structure and parts list

● RCS2-G4-32

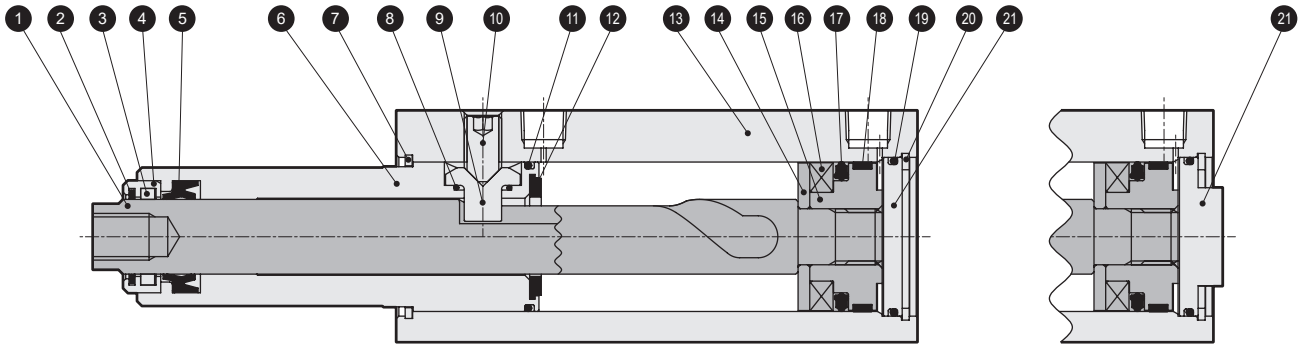

Spigot at head side (H)

No.	Part name	Material	Remarks	No.	Part name	Material	Remarks
1	Piston rod	Stainless steel	Special treatment	12	Cushion rubber	Urethane rubber	
2	Coil scraper	Copper alloy		13	Body	Aluminum alloy	Hard alumite
3	Lube keeper			14	Spacer	Aluminum alloy	Zinc chromate
4	Holder	Aluminum alloy	Zinc chromate	15	Piston	Aluminum alloy	Zinc chromate
5	Rod packing	Nitrile rubber		16	Piston magnet	Plastic	
6	Rod metal	Aluminum alloy	Hard alumite	17	Piston packing	Nitrile rubber	
7	Circlip	Steel	Zinc phosphate	18	Wear ring	Polyacetal resin	
8	Guide pin gasket	Nitrile rubber		19	Cover gasket	Nitrile rubber	
9	Guide pin	Steel	Special treatment	20	C-snap ring	Steel	Zinc phosphate
10	Hexagon socket set screw	Stainless steel		21	Base plate	Aluminum alloy	Zinc chromate
11	Rod metal gasket	Nitrile rubber					

● RCS2-G4-40/50/63

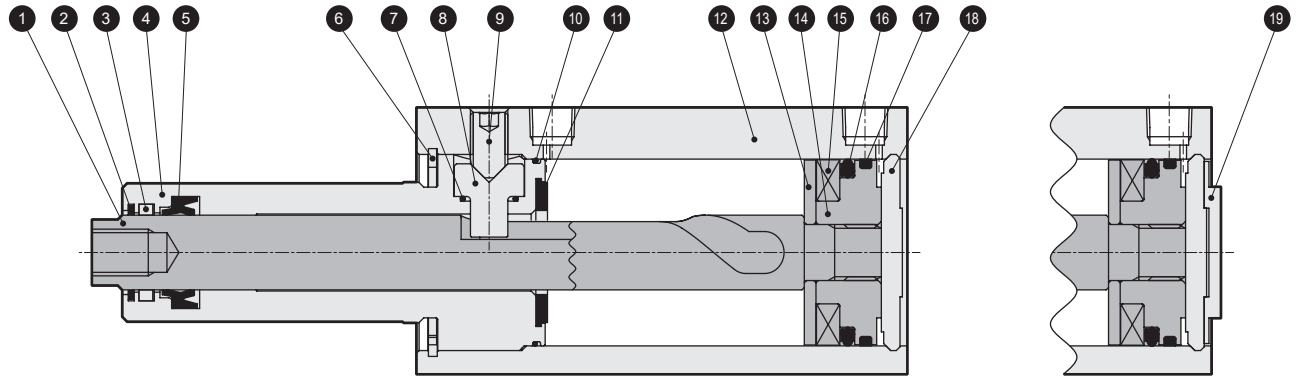

Spigot at head side (H)

No.	Part name	Material	Remarks	No.	Part name	Material	Remarks
1	Piston rod	Stainless steel	Special treatment	11	Cushion rubber	Urethane rubber	
2	Coil scraper	Copper alloy		12	Body	Aluminum alloy	Hard alumite
3	Lube keeper			13	Spacer	Aluminum alloy	Zinc chromate
4	Rod metal	Aluminum alloy	Hard alumite	14	Piston	Aluminum alloy	Zinc chromate
5	Rod packing	Nitrile rubber		15	Piston magnet	Plastic	
6	C-snap ring	Steel	Zinc phosphate	16	Piston packing	Nitrile rubber	
7	Guide pin gasket	Nitrile rubber		17	Wear ring	Polyacetal resin	
8	Guide pin	Steel	Special treatment	18	Cover	Aluminum alloy	Zinc chromate
9	Hexagon socket set screw	Stainless steel		19	Spigot ring	Aluminum alloy	Zinc chromate
10	Rod metal gasket	Nitrile rubber					

Consumable parts list

● Packing kit (There is no lubricator in the kit.)

Bore size (mm)	Kit No.	Consumable parts No.
ø32	RCS2-32K	2 5 8 11 12 17 18 19
ø40	RCS2-40K	2 5 7 10 11 16 17
ø50	RCS2-50K	
ø63	RCS2-63K	

● Guide pin kit

Bore size (mm)	Kit No.	Consumable parts No.
ø32	RCS2-G-32	9 10
ø40	RCS2-G-40	8 9
ø50	RCS2-G-50	
ø63	RCS2-G-63	

Dimensions (basic shape: 00)

● RCS2-G4-00-32

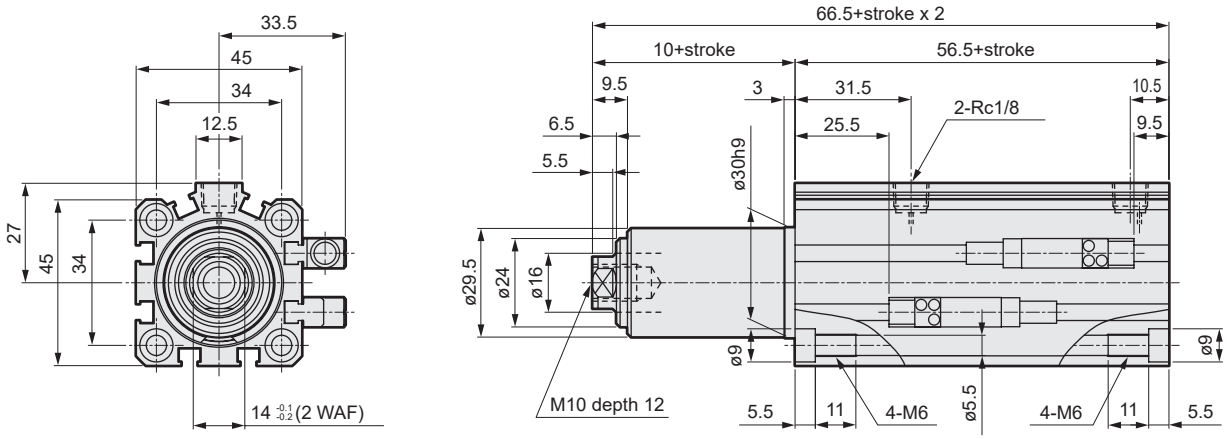

* Dimensions of RCS2-G4-40, 50 and 63 are the same as RCS2 Series basic.
  Refer to page 1074.
* Dimensions of mounting FA and FB are the same as RCS2 Series basic.
  Refer to pages 1075 and 1076.

LCM
LCR
LCG
LCW
LCX
STM
STG
STS/STL
STR2
UCA2
ULK*
JSK/M2
JSG
JSC3/JSC4
USSD
UFCD
USC
UB
JSB3
LMB
LML
HCM
HCA
LBC
CAC4
UCAC2
CAC-N
UCAC-N
RCS2
RCC2
PCC
SHC
MCP
GLC
MFC
BBS
RRC
GRC
RV3*
NHS
HRL
LN
Hand
Chuk
MecHnd/Chuk
ShkAbs
FJ
FK
SpdContr
Ending

Technical data (selection example)

[Specifications]

- Required clamping force: 400 N
- Working pressure: 0.5 MPa
- Maximum piston speed: 100 mm/s
- Lever shape
  M2: 0.31 kg L: 0.08 m
  A: 0.1 m a: 0.01 m
- Jig shape
  M1: 0.04 kg D: 0.02 m

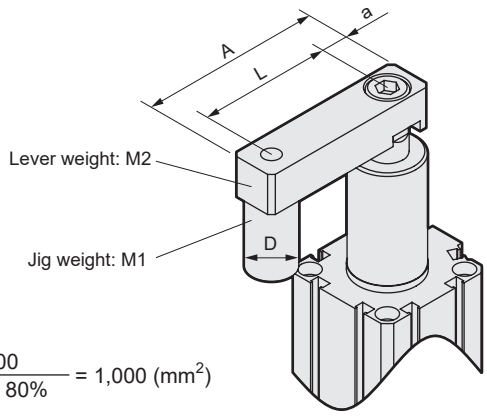

1. Calculate the required pressurized area.

$$\text{Required pressurized area (mm}^2) = \frac{\text{Required clamping force (N)}}{\text{Working pressure (MPa) x efficiency}} = \frac{400}{0.5 \times 80\%} = 1{,}000\ (\text{mm}^2)$$

Note) Efficiency varies depending on the shape and material of the clamp lever.

2. Select the cylinder size from the pressurized area (retracted side) given in the specifications list.

ø40 pressurized area: 1,055 (mm^2) > required pressurized area: 1,000 (mm^2)

3. Confirm the allowable length for the clamp lever.

Working pressure 0.5 MPa, clamp lever length 80 mm
⇒ Within usable range

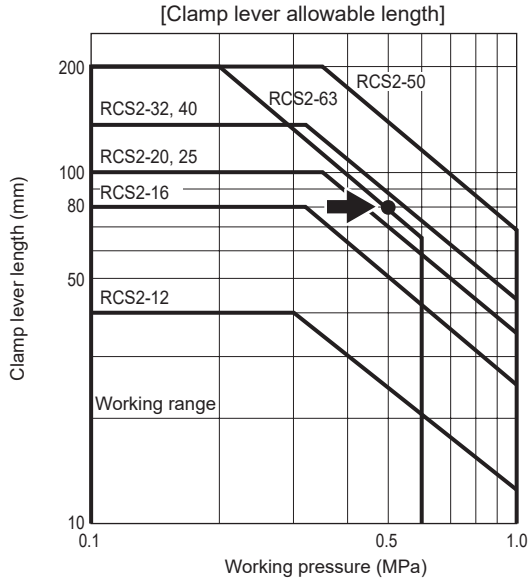

4. Confirm the allowable moment of inertia for the clamp lever.

Calculating moment of inertia
(Use the formula of concentrated load on page 1091)

$$\text{Moment of inertia } I = M_1 (R_1^2 + K_1^2) + \frac{M_2 R_2^2}{3}$$

$$R_1 = L,\ R_2 = A - a,\ K_1^2 = \frac{D^2}{8}$$

$$I = 0.04 \times \left(0.08^2 + \frac{0.02^2}{8}\right) + \frac{0.31 \times (0.1 - 0.01)^2}{3}$$

$$= 1.10 \times 10^{-3}\ \text{kg/m}^2$$

Moment of inertia 1.10×10^{-3} kg/m^2
Maximum piston speed 100 mm/s
⇒ Within usable range

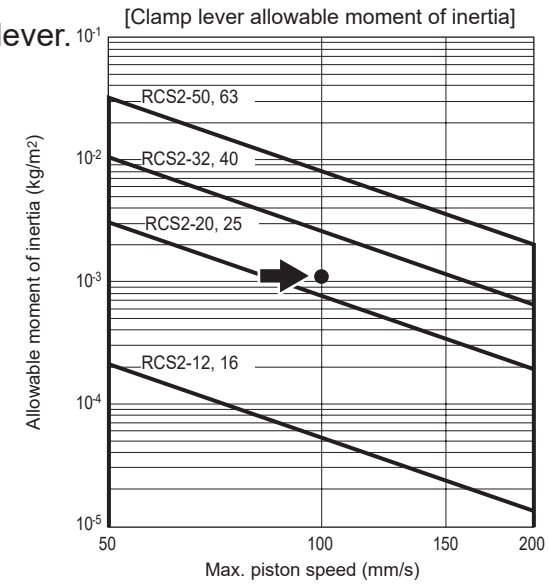

Based on the above, size ø40 is selected.

Figure for moment of inertia calculation

Shape	Sketch	Requirements	Moment of inertia I kg/m²	Radius of rotation K_1^2	Remarks
Dial plate	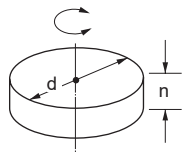	● Diameter d (m) ● Weight M (kg)	$I = \frac{Md^2}{8}$	$\frac{d^2}{8}$	● No mounting direction
Stepped dial plate	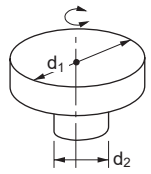	● Diameter d_1 (m) d_2 (m) ● Weight d_1 section M_1 (kg) d_2 section M_2 (kg)	$I = \frac{1}{8}(M_1d_1^2+M_2d_2^2)$	$\frac{d_1^2+d_2^2}{8}$	● Ignore when the d_2 section is extremely small compared to the d_1 section
Bar (center of rotation at end)	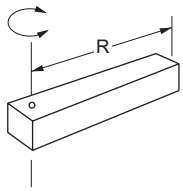	● Bar length R (m) ● Weight M (kg)	$I = \frac{MR^2}{3}$	$\frac{R^2}{3}$	● Mounting direction is horizontal
Thin rod	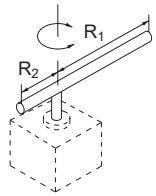	● Bar length R_1 R_2 ● Weight M_1 M_2	$I = \frac{M_1, R_1^2}{3} + \frac{M_2, R_2^2}{3}$	$\frac{R_1^2+R_2^2}{3}$	● Mounting direction is horizontal
Bar (center of rotation at CG)	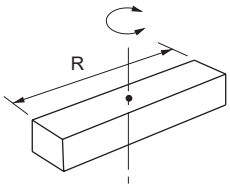	● Bar length R (m) ● Weight M (kg)	$I = \frac{MR^2}{12}$	$\frac{R^2}{12}$	● No mounting direction
Thin rectangular parallelepiped	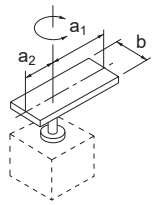	● Plate length a_1 a_2 ● Side length b ● Weight M_1 M_2	$I = \frac{M_1}{12}(4a_1^2+b^2)+\frac{M_2}{12}(4a_2^2+b^2)$	$\frac{(4a_1^2+b^2)+(4a_2^2+b^2)}{12}$	● Mounting direction is horizontal
Rectangular parallelepiped	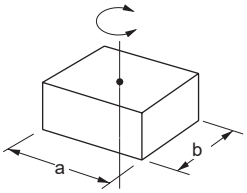	● Side length a (m) ● Weight b (m) M (kg)	$I = \frac{M}{12}(a^2+b^2)$	$\frac{a^2+b^2}{12}$	● No mounting direction
Concentrated load	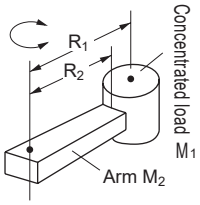	● Shape of concentrated load ● Length to center of gravity of concentrated load R_1 ● Arm length R_2 (m) ● Concentrated load weight M_1 (kg) ● Arm weight M_2 (kg)	$I = M_1(R_1^2+k_1^2) + \frac{M_2R_2^2}{3}$	Calculate k_1^2 according to shape of concentrated load	● Mounting direction is horizontal ● When M_2 is extremely small compared to M_1, it may be calculated as $M_2 = 0$

Safety Precautions

Be sure to read this section before use.
Refer to Intro Page 73 for cylinders in general and Intro Page 80 for cylinder switches.

Product-specific cautions: Rotary clamp cylinder/single guide RCS2 Series

Design/selection

1. Common

WARNING

■ Precautions for operation

The piston rod of this cylinder swivels 90° during operation. Make sure that the clamp lever mounted to the piston rod end does not interfere with the exterior while rotating. If the rotation of the clamp lever could cause bodily injury, be sure to provide safety measures by installing a protective cover, etc., to the clamp lever's surroundings.

CAUTION

■ Using this product with rotation applied to the piston rod may lead to damage, malfunctions, or decreased non-rotating accuracy. Be sure to observe the following precautions.

1. Do not clamp the product mid-rotary stroke. Adjust the clamping position to be approx. 3 mm or more before the stroke end position.

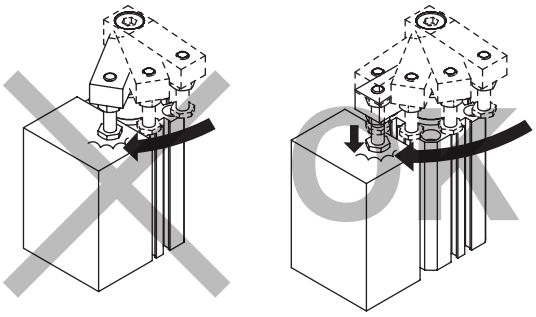

2. Do not clamp the product in the rotational direction.

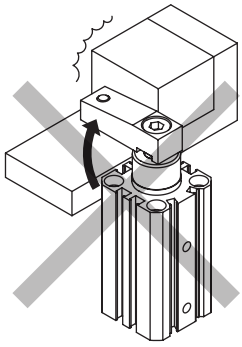

3. Do not use as a stopper.

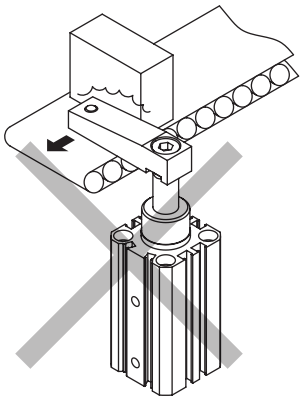

4. Do not clamp the inclined portion.

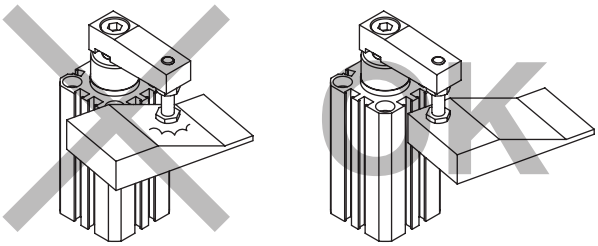

5. Do not move the workpiece with exterior power while clamping.

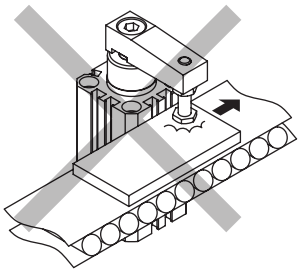

6. Do not install horizontally.

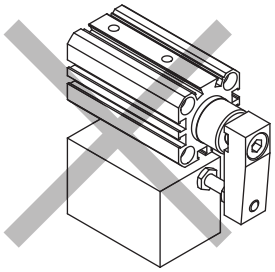

■ Clamp lever allowable length and working pressure

The upper limit of the clamp lever's allowable length differs depending on the working pressure. Set it to within the range shown below.

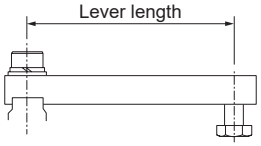

[Clamp lever allowable length]

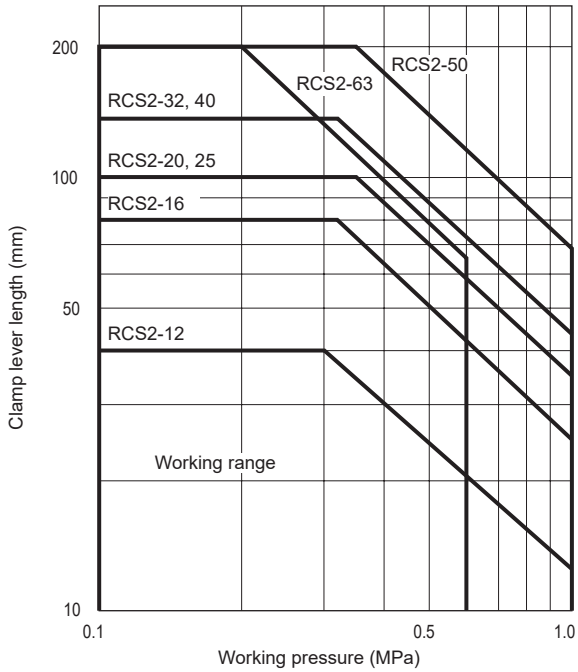

■ Clamp lever allowable moment of inertia and piston speed

The upper limit of the clamp lever's allowable moment of inertia differs depending on the piston speed. Set it to within the range shown below.

[Clamp lever allowable moment of inertia]

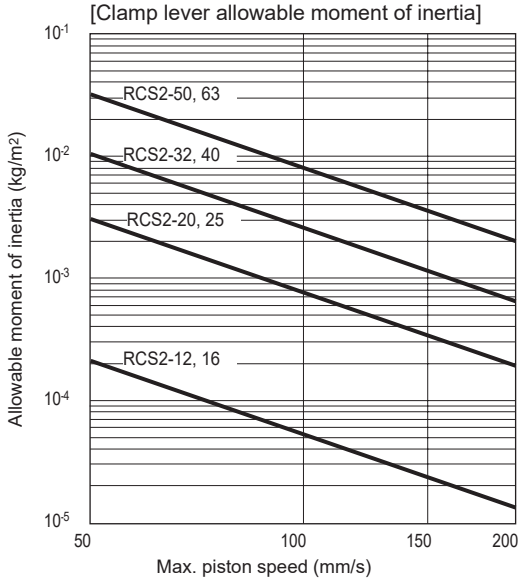

2. Anti-spatter adherence RCS2-G4

■ The durability of this cylinder is improved in comparison to standard cylinders when used in an atmosphere exposed to spatter. However, durability may be shorter than the standard cylinder when used other than in an atmosphere exposed to spatter. Do not use this cylinder in atmospheres other than those with spatter.

■ Anti-spatter adherence agent is volatile. If the anti-spatter adherence agent starts drying up on the rod surface, apply the agent to the rod surface again.

Mounting, installation and adjustment

⚠ WARNING

■ The piston rod of this cylinder strokes while swiveling (90°) during operation.

As the lever mounted to the piston rod end rotates, do not insert your hands or enter the drive zone during operation.

⚠ CAUTION

■ Mounting and removing the lever

Use the following procedures to attach and remove the lever. (Applying excessive rotational force to the piston rod may cause damage to the internal parts.)

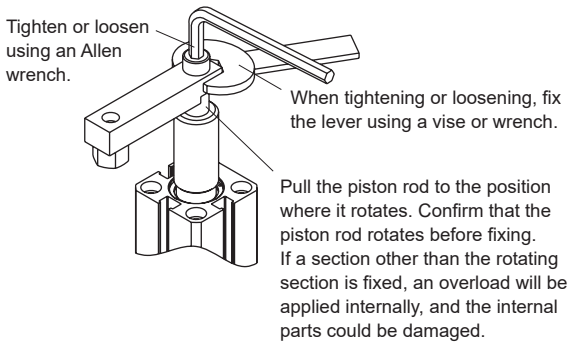

■ Impact

Do not apply impact to the rod metal. There is a risk of damage.

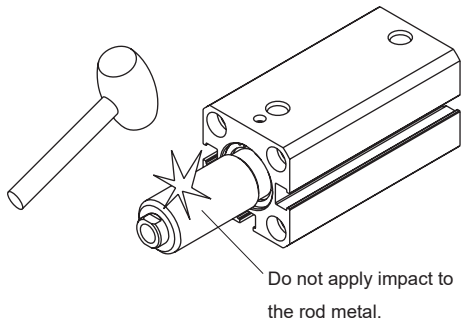

MEMO

RCC2

Rotary clamp cylinder

ø16/ø20/ø25/ø32/ø40/ø50/ø63

Special

Overview

The rotary clamp mechanism is incorporated into a square, space saving cylinder.
Ideal for clamping small workpieces such as electronic components.
Simple clean-room specifications (with exhaust port) can also be custom made. Ideal for alignment of liquid crystal glass, etc.
Contact CKD for details.

Features

Space saving/square shape
All bore size switch mountable
- Reed/proximity/ strong magnetic field proof switch mountable

Two guide grooves and roller
- Two guide grooves are provided on all bore sizes to improve the wear resistance of the grooves. Also, rollers are attached to the guide pins (ø32 to ø50).

CONTENTS

● Double acting/single rod (RCC2) 1096
● Double acting/anti-spatter adherence (RCC2-G4) 1108
⚠ Safety precautions 1115

The cylinder switches T2YH, T2YV, T3YH, and T3YV are scheduled for end of production at the end of December 2023.

Series variation

○: Made to order

Variation	Model No. JIS symbol	Bore size (mm)	Stroke (mm)								Rotor stroke	Clamp section stroke	Mounting				Option	Switch	Page
													Basic	Rod side flange	Head side flange	With spigot at head side	Rod end 2 widths across flats		
			19	21	25	29	31	35	40	70	(mm)	(mm)	00	FA	FB	HI	N4		
Double acting/ single rod	RCC2 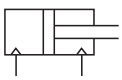	ø16	○			○					9		○	○	○	○	○	○	1096
		ø20/ø25		○			○				11	10/20	○	○	○	○			
		ø32/ø40			○			○			15		○	○	○	○			
		ø50/ø63							○	○	20	20/50	○	○	○	○			
Double acting/ anti-spatter adherence	RCC2-G4 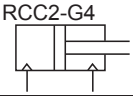	ø20/ø25		○			○				11	10/20	○	○	○			○	1108
		ø32/ø40			○			○			15		○	○	○				
		ø50/ø63							○	○	20	20/50	○	○	○				

Rotary clamp cylinder Double acting/single rod

RCC2 Series

● Bore size: ø16/ø20/ø25/ø32/ø40/ø50/ø63

● Double acting

JIS symbol

RoHS CAD

Specifications

* Made-to-order product.

Item		RCC2						
Bore size mm		ø16	ø20	ø25	ø32	ø40	ø50	ø63
Actuation		Double acting						
Working fluid		Compressed air						
Max. working pressure MPa		1.0 (≈150 psi, 10 bar)						
Min. working pressure MPa		0.2 (≈29 psi, 2 bar)						
Proof pressure MPa		1.6 (≈230 psi, 16 bar)						
Ambient temperature °C		-10 (14°F) to 60 (140°F) (no freezing)						
Port size		M5			Rc1/8		Rc1/4	
Working piston speed mm/s		50 to 200						
Cushion		With rubber cushion						
Lubrication		Not required (use turbine oil class 1 ISO VG32 if necessary for lubrication)						
Rotating angle		90°±10°						
Rotating direction		Right/Left						
Non-rotating accuracy (clamping): Initial value		±1°			±0.9°		±0.7°	
Pressurized area mm^2	Pull	123	201	377	603	1055	1649	2626
	Push	201	314	490	804	1256	1963	3117
Durability		1 million times						

Stroke

Bore size (mm)	Stroke (mm)	Rotor stroke (mm)	Clamp section stroke (mm)
ø16	19, 29	9	10, 20
ø20	21, 31	11	10, 20
ø25			
ø32	25, 35	15	10, 20
ø40			
ø50	40, 70	20	20, 50
ø63			

Rotating direction

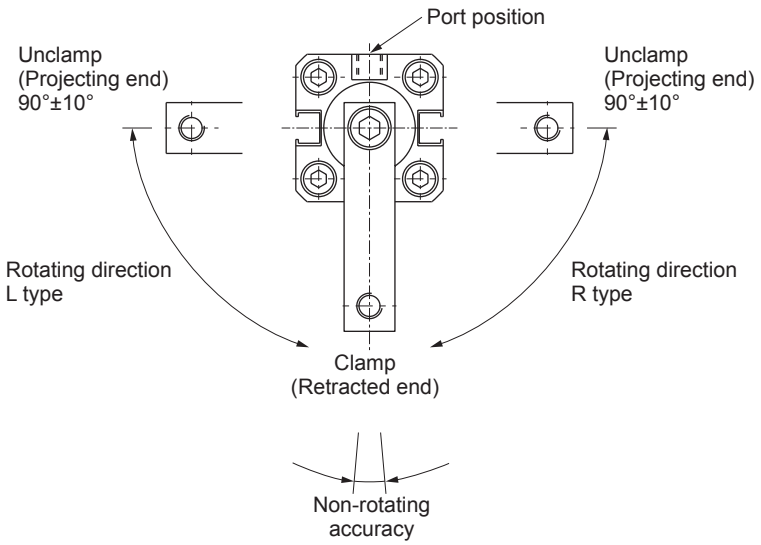

Switch specifications

● 1-color/2-color LED/for AC magnetic field proof

Item	Proximity 2-wire			Proximity 3-wire				Reed 2-wire				Proximity 2-wire
	T2H/T2V	T2YH/ T2YV	T2WH/ T2WV	T3H/T3V	T3PH/ T3PV	T3YH/ T3YV	T3WH/ T3WV	T0H/T0V		T5H/T5V		T2YD
Applications	Dedicated for programmable controller			For programmable controller, relay				For programmable controller, relay		For programmable controller, relay, IC circuit (no indicator lamp), serial connection		For programmable controller
Output method	-			NPN output	PNP output	NPN output	NPN output	-				
Pwr. supp. V.	-			10 to 28 VDC				-				
Load voltage	10 to 30 VDC		24 VDC ±10%	30 VDC or less				12/24 VDC	110 VAC	5/12/24 VDC	110 VAC	24 VDC ±10%
Load current	5 to 20 mA (*3)			100 mA or less		50 mA or less		5 to 50 mA	7 to 20 mA	50 mA or less	20 mA or less	5 to 20 mA
Indicator lamp	LED (Lit when ON)	Red/green LED (Lit when ON)	Red/green LED (Lit when ON)	LED (Lit when ON)	Yellow LED (Lit when ON)	Red/green LED (Lit when ON)	Red/green LED (Lit when ON)	LED (Lit when ON)		Without LED		Red/green LED (Lit when ON)
Leakage current	1 mA or less			10 μA or less				0 mA				1 mA or less
Weight g	1 m:18 3 m:49 5 m:80	1 m:33 3 m:87 5 m:142	1 m:18 3 m:49 5 m:80	1 m:18 3 m:49 5 m:80		1 m:33 3 m:87 5 m:142	1 m:18 3 m:49 5 m:80	1 m:18 3 m:49 5 m:80				1 m:61 3 m:166 5 m:272

*1 : Refer to Ending Page 1 for detailed switch specifications and dimensions.
*2 : Switches other than the above models, such as switches with connectors, are also available. Refer to Ending Page 1.
*3 : The max. load current is 20 mA at 25°C. The current is lower than 20 mA if the operating ambient temperature around the switch is higher than 25°C. (5 to 10 mA at 60°C)
*4 : AC magnetic field proof switch (T2YD) cannot be used in DC magnetic fields.

Cylinder weight

(Unit: kg)

Item/mounting	Stroke (mm)								Rod side flange (FA)	Head side flange FB	Switch weight
Bore size (mm)	19	29	21	31	25	35	40	70			
ø16	0.22	0.28	-	-	-	-	-	-	0.07	0.07	Refer to the weight in the switch specifications.
ø20	-	-	0.35	0.43	-	-	-	-	0.13	0.13	
ø25	-	-	0.38	0.45	-	-	-	-	0.16	0.16	
ø32	-	-	-	-	0.8	0.9	-	-	0.16	0.16	
ø40	-	-	-	-	1.0	1.1	-	-	0.25	0.25	
ø50	-	-	-	-	-	-	1.6	2.2	0.5	0.5	
ø63	-	-	-	-	-	-	2.8	3.6	0.65	0.65	

Theoretical thrust table

(Unit: N)

Bore size (mm)	Operating direction	Working pressure MPa								
		0.2	0.3	0.4	0.5	0.6	0.7	0.8	0.9	1.0
ø16	Push	40.2	60.3	80.4	1.01×10^2	1.21×10^2	1.41×10^2	1.61×10^2	1.81×10^2	2.01×10^2
	Pull	24.5	36.8	49.0	61.3	73.5	85.8	98.0	1.10×10^2	1.23×10^2
ø20	Push	62.8	94.2	1.26×10^2	1.57×10^2	1.89×10^2	2.20×10^2	2.51×10^2	2.83×10^2	3.14×10^2
	Pull	40.2	60.3	80.4	1.01×10^2	1.21×10^2	1.41×10^2	1.61×10^2	1.81×10^2	2.01×10^2
ø25	Push	98.2	1.47×10^2	1.96×10^2	2.45×10^2	2.95×10^2	3.44×10^2	3.93×10^2	4.42×10^2	4.91×10^2
	Pull	75.6	1.13×10^2	1.51×10^2	1.89×10^2	2.27×10^2	2.64×10^2	3.02×10^2	3.40×10^2	3.78×10^2
ø32	Push	1.61×10^2	2.41×10^2	3.22×10^2	4.02×10^2	4.83×10^2	5.63×10^2	6.43×10^2	7.24×10^2	8.04×10^2
	Pull	1.21×10^2	1.81×10^2	2.41×10^2	3.02×10^2	3.62×10^2	4.22×10^2	4.83×10^2	5.43×10^2	6.03×10^2
ø40	Push	2.51×10^2	3.77×10^2	5.03×10^2	6.28×10^2	7.54×10^2	8.80×10^2	1.01×10^3	1.13×10^3	1.26×10^3
	Pull	2.11×10^2	3.17×10^2	4.22×10^2	5.28×10^2	6.33×10^2	7.39×10^2	8.45×10^2	9.50×10^2	1.06×10^3
ø50	Push	3.93×10^2	5.89×10^2	7.85×10^2	9.82×10^2	1.18×10^3	1.37×10^3	1.57×10^3	1.77×10^3	1.96×10^3
	Pull	3.30×10^2	4.95×10^2	6.60×10^2	8.25×10^2	9.90×10^2	1.15×10^3	1.32×10^3	1.48×10^3	1.65×10^3
ø63	Push	6.23×10^2	9.35×10^2	1.25×10^3	1.56×10^3	1.87×10^3	2.18×10^3	2.49×10^3	2.81×10^3	3.12×10^3
	Pull	5.25×10^2	7.88×10^2	1.05×10^3	1.31×10^3	1.58×10^3	1.84×10^3	2.10×10^3	2.36×10^3	2.63×10^3

LCM
LCR
LCG
LCW
LCX
STM
STG
STS/STL
STR2
UCA2
ULK*
JSK/M2
JSG
JSC3/JSC4
USSD
UFCD
USC
UB
JSB3
LMB
LML
HCM
HCA
LBC
CAC4
UCAC2
CAC-N
UCAC-N
RCS2
RCC2
PCC
SHC
MCP
GLC
MFC
BBS
RRC
GRC
RV3*
NHS
HRL
LN
Hand
Chuk
MecHnd/Chuk
ShkAbs
FJ
FK
SpdContr
Ending

How to order

Without switch (built-in magnet for switch)

RCC2 - 00 - 20 - 21 - R ——— ○

With switch (built-in magnet for switch)

RCC2 - 00 - 20 - 21 - R - T0H - R - ○

Ⓐ Mounting
Ⓑ Bore size
Ⓒ Stroke
Ⓓ Rotating direction
Ⓔ Switch model No. *1 *2
Ⓕ Switch quantity
Ⓖ Option

Code	Description
Ⓐ Mounting	
00	Basic
FA	Rod side flange
FB	Head side flange *3
HI	With spigot at head side

Ⓑ Bore size (mm)

16	ø16
20	ø20
25	ø25
32	ø32
40	ø40
50	ø50
63	ø63

Ⓒ Stroke (mm)

Stroke	Bore size	Rotor	Clamp
19	ø16	9	10
21	ø20/ø25	11	10
25	ø32/ø40	15	10
29	ø16	9	20
31	ø20/ø25	11	20
35	ø32/ø40	15	20
40	ø50/ø63	20	20
70	ø50/ø63	20	50

Ⓓ Rotating direction

R	Clamp (Pull) looking from rod side: Rotated 90° in CW direction
L	Clamp (Pull) looking from rod side: Rotated 90° in CCW direction

Ⓔ Switch model No.

Axial lead wire	Radial lead wire	Contact	Voltage AC	Voltage DC	Indicator	Lead wire
T0H*	**T0V***	Reed	●	●	1-color LED	2-wire
T5H*	**T5V***	Reed	●	●	Without LED	2-wire
T2H*	**T2V***	Proximity		●	1-color LED	2-wire
T3H*	**T3V***	Proximity		●	1-color LED	3-wire
T3PH*	**T3PV***	Proximity		●	1-color LED	3-wire
T2WH*	**T2WV***	Proximity		●	2-color LED	2-wire
T2YH*	**T2YV***	Proximity		●	2-color LED	2-wire
T3WH*	**T3WV***	Proximity		●	2-color LED	3-wire
T3YH*	**T3YV***	Proximity		●	2-color LED	3-wire
T2YD*	**-**	Proximity		●	2-color LED	2-wire
T2YDT*	**-**	Proximity		●	AC magnetic field	2-wire

*** Lead wire length (m)**

Blank	1 m (standard)
3	3 m (option)
5	5 m (option)

Ⓕ Switch quantity

R	1 on rod side
H	1 on head side
D	2

Ⓖ Option

Blank	Rod end width across flats
N4	Rod end 2 widths across flats (ø16 only)

⚠ Precautions for model No. selection

*1: Switches are shipped with the product. Contact CKD if assembling before shipment is necessary.
2: T3P⇅, T2Y⇅*, T3Y⇅*, T2YD*, and T2YDT* switches cannot be used for ø16.
*3: When the type with the switch is selected, the product could interfere with the fixing screws depending on the switch mounting surface and switch.

[Example of model No.]

RCC2-00-20-21-R-T0H-R

Model: Rotary clamp cylinder double acting

Ⓐ Mounting : Basic
Ⓑ Bore size : ø20 mm
Ⓒ Stroke : 21 mm
Ⓓ Rotating direction : Clamp (Pull) looking from rod side: Rotated 90° in CW direction
Ⓔ Switch model No. : Reed T0H switch, lead wire length 1 m
Ⓕ Switch quantity : 1 on rod side

How to order switch

SW - T0H

↓

Switch model No. (Item Ⓔ above)

Internal structure and parts list

● RCC2-16/20/25

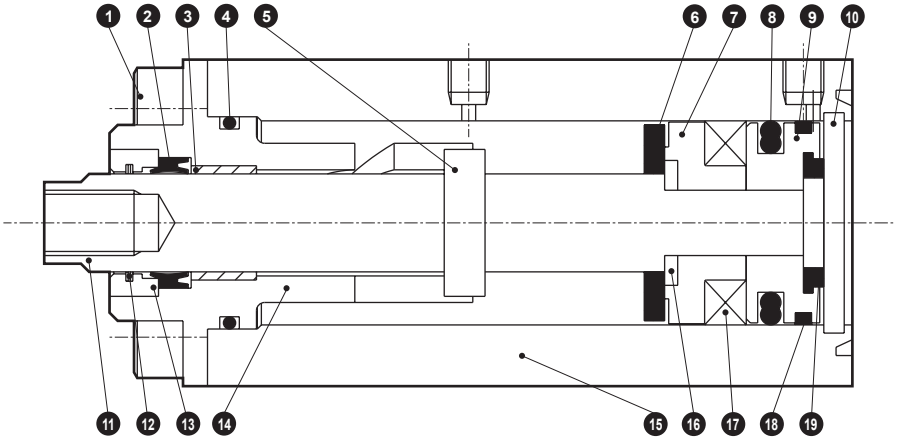

● RCC2-32/40/50/63

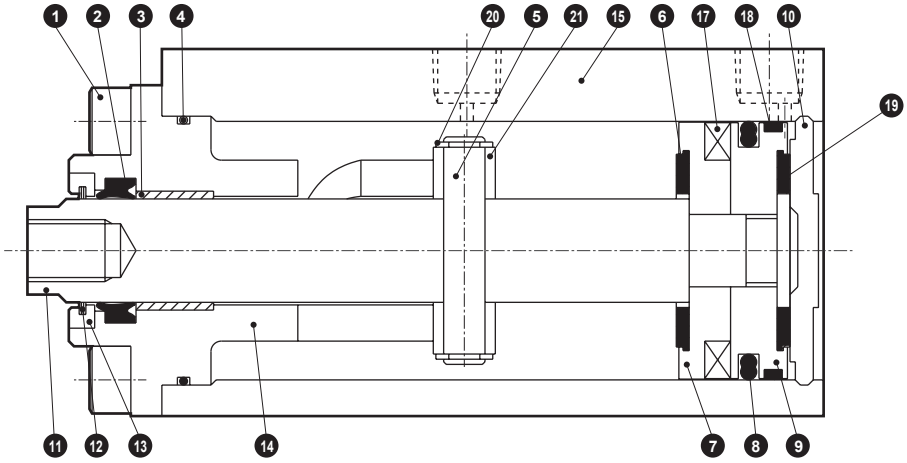

No.	Part name	Material	Remarks	No.	Part name	Material	Remarks
1	Hexagon socket head cap screw	Stainless steel		11	Piston rod	ø16: Stainless steel ø20 to ø63: Steel	
2	Rod packing	Nitrile rubber		12	Coil scraper	Copper alloy	Except for ø16
3	Bush	Copper-based		13	Holder	Aluminum alloy	
4	Cylinder gasket	Nitrile rubber		14	Rod cover	Steel	
5	Pin	Steel		15	Cylinder body	Aluminum alloy	
6	Cushion rubber (R)	Urethane rubber		16	Spacer washer	Stainless steel	Except for ø16
7	Spacer	ø20, ø25: Special resin ø16, ø32 to ø63: Aluminum alloy		17	Magnet	Plastic	
				18	Wear ring	Acetal resin	
8	Piston packing	Nitrile rubber		19	Cushion rubber (H)	Urethane rubber	
9	Piston	Aluminum alloy		20	E type snap ring	Steel	
10	Cover	ø16, ø20, ø25: Stainless steel ø32 to ø63: Aluminum alloy		21	Roller	Steel	

Repair parts list

Bore size (mm)	Kit No.	Repair parts No.
ø16	RCC2-16K	❷ ❹ ❻ ❽ ⓬ ⓲ ⓳
ø20	RCC2-20K	
ø25	RCC2-25K	
ø32	RCC2-32K	
ø40	RCC2-40K	
ø50	RCC2-50K	
ø63	RCC2-63K	

Note: ⓬ Coil scraper is not supplied for ø16.
Note: ❻ Cushion rubber (R) cannot be replaced for ø16 to ø25.

LCM
LCR
LCG
LCW
LCX
STM
STG
STS/STL
STR2
UCA2
ULK*
JSK/M2
JSG
JSC3/JSC4
USSD
UFCD
USC
UB
JSB3
LMB
LML
HCM
HCA
LBC
CAC4
UCAC2
CAC-N
UCAC-N
RCS2
RCC2
PCC
SHC
MCP
GLC
MFC
BBS
RRC
GRC
RV3*
NHS
HRL
LN
Hand
Chuk
MecHnd/Chuk
ShkAbs
FJ
FK
SpdContr
Ending

Dimensions CAD (ø16, ø20, ø25)

● Basic (00)

ø16

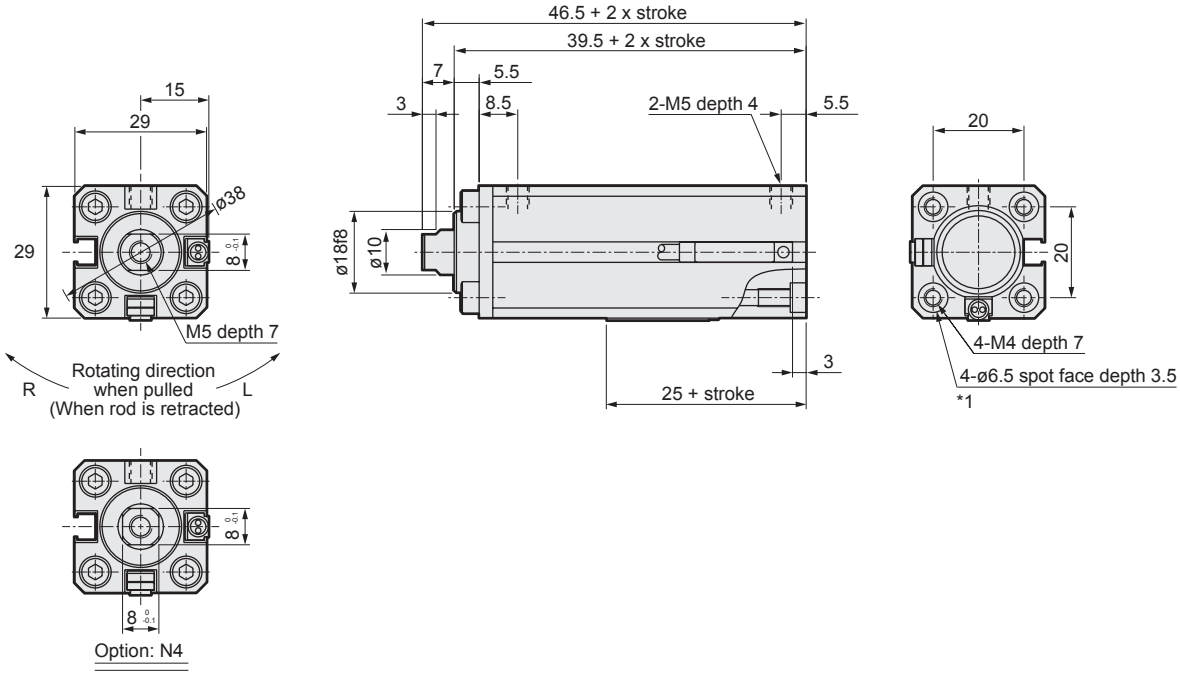

ø20/ø25

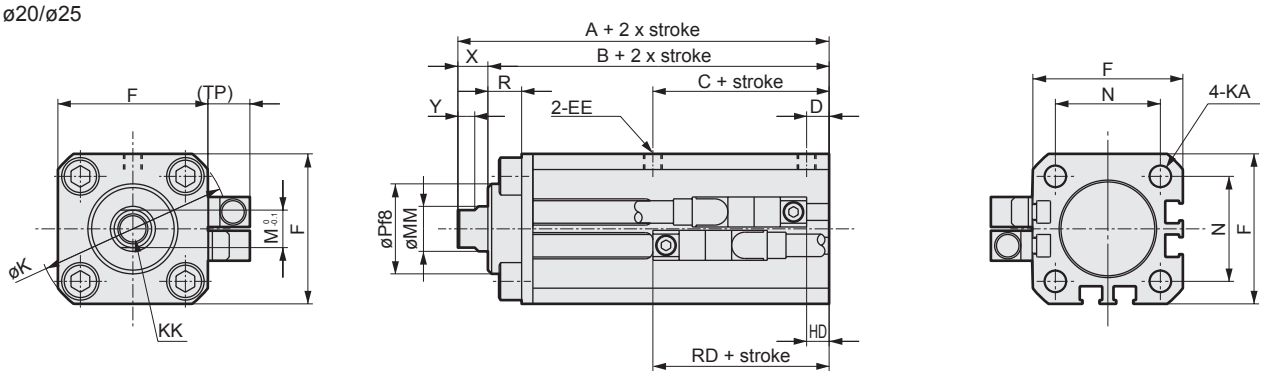

Code	Basic (00) dimensions table															
Bore size (mm)	A	B	C	D	EE	F	K	KA	KK	M	MM	N	P	R	X	Y
ø20	56	48	24	5.5	M5x0.8	36	47	M6 depth 11	M8 depth 15	10	12	25.5	24	9	8	4.5
ø25	57	49	26	6	M5x0.8	40	51	M6 depth 11	M8 depth 15	10	12	28	24	9	8	4.5

Code	With switch											
Bore size (mm)	T2/3H / T2/3V			T0/5H, T0/5V			T*YH/T*YV			T2YD*		
	HD	RD	TP	HD	RD	TP	HD	RD	TP	HD	RD	TP
ø20	7	26	0	6	27	0	6	27	5	6	27	11
ø25	6	25	0	5	26	0	5	26	5	5	26	11

*1: Cannot be mounted with a through bolt.

Dimensions CAD (ø32, ø40, ø50, ø63)

● Basic (00)

ø32/ø40

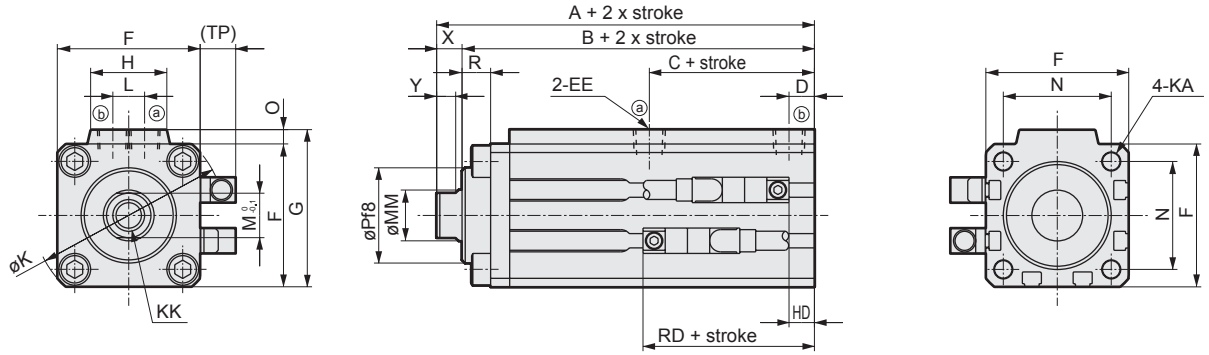

ø50/ø63

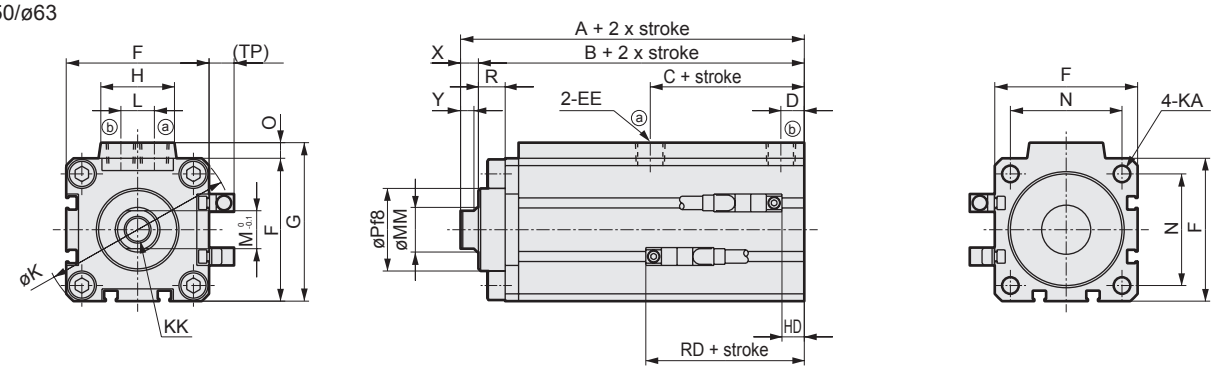

Code	Basic (00) dimensions table																			
Bore size (mm)	A	B	C	D	EE	F	G	H	K	KA	KK	L	M	MM	N	O	P	R	X	Y
ø32	69	61	27	8	Rc1/8	45	49.5	24	60	M6 depth 11	M10 depth 15	10	14	16	34	4.5	30	9	8	6
ø40	70	62	29	8.5	Rc1/8	52	57	24	69	M6 depth 11	M10 depth 15	10	14	16	40	5	35	9	8	6
ø50	74	66	29	10.5	Rc1/4	64	71	33	86	M8 depth 13	M12 depth 15	15	17	20	50	7	37	12	8	6
ø63	85	75	38	11	Rc1/4	77	84	33	103	M10 depth 25	M16 depth 21	15	22	25	60	7	48	12	10	8

Code	With switch											
Bore size	T2/3H / T2/3V			T0/5H, T0/5V			T*YH/T*YV			T2YD*		
(mm)	HD	RD	TP	HD	RD	TP	HD	RD	TP	HD	RD	TP
ø32	9	28	0	8	29	0	8	29	5	8	29	11
ø40	10	29	0	9	30	0	9	30	5	9	30	11
ø50	11	30	0	10	31	0	10	31	5	10	31	11
ø63	19	37	0	18	38	0	18	38	5	18	38	11

*1: Cannot be mounted with a through bolt.

LCM
LCR
LCG
LCW
LCX
STM
STG
STS/STL
STR2
UCA2
ULK*
JSK/M2
JSG
JSC3/JSC4
USSD
UFCD
USC
UB
JSB3
LMB
LML
HCM
HCA
LBC
CAC4
UCAC2
CAC-N
UCAC-N
RCS2
RCC2
PCC
SHC
MCP
GLC
MFC
BBS
RRC
GRC
RV3*
NHS
HRL
LN
Hand
Chuk
MecHnd/Chuk
ShkAbs
FJ
FK
SpdContr
Ending

Dimensions CAD (ø16, ø20, ø25)

● Rod side flange (FA)

ø16

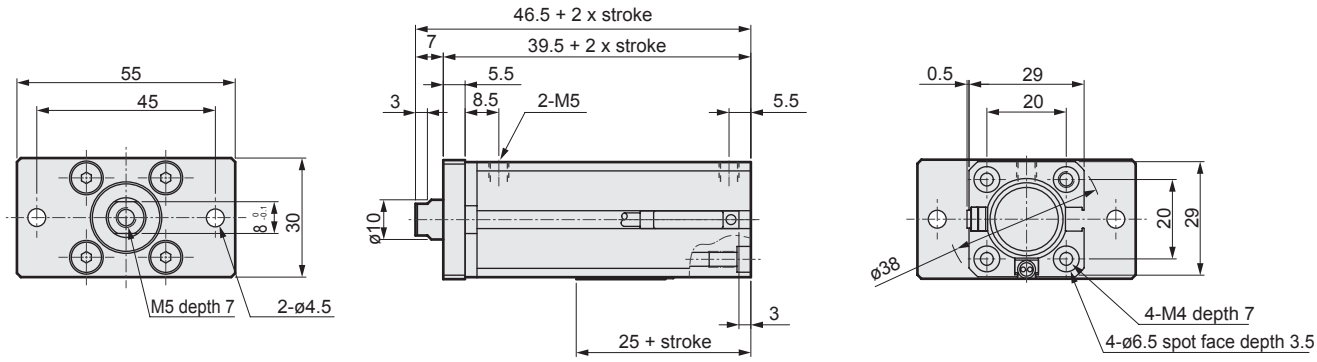

ø20/ø25

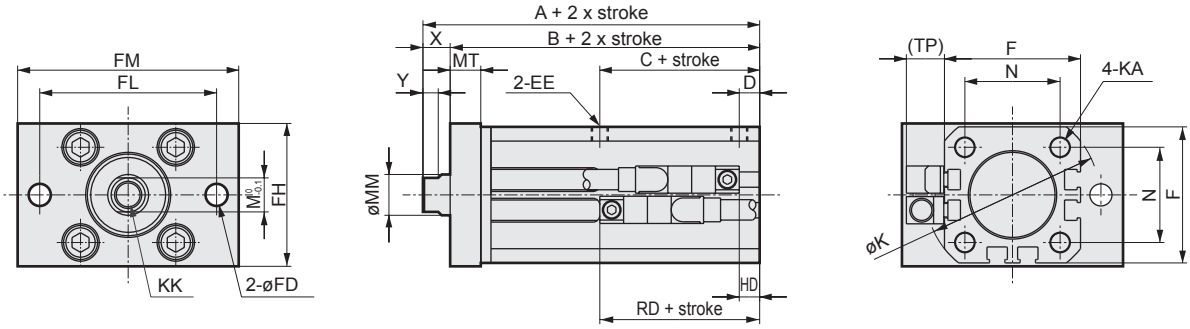

Code	Rod side flange (FA) basic dimensions																	
Bore size (mm)	A	B	C	D	EE	F	K	KA	KK	M	MM	N	X	Y	FD	FH	FL	FM
ø20	56	48	24	5.5	M5x0.8	36	47	M6 depth 11	M8 depth 15	10	12	25.5	8	4.5	6.5	38	48	60
ø25	57	49	26	6	M5x0.8	40	51	M6 depth 11	M8 depth 15	10	12	28	8	4.5	6.5	42	52	65

Code		With switch											
Bore size (mm)	MT	T2/3H / T2/3V			T0/5H, T0/5V			T*YH/T*YV			T2YD*		
		HD	RD	TP	HD	RD	TP	HD	RD	TP	HD	RD	TP
ø20	9	7	26	0	6	27	0	6	27	5	6	27	11
ø25	9	6	25	0	5	26	0	5	26	5	5	26	11

Dimensions CAD (ø32, ø40, ø50, ø63)

● Rod side flange (FA)

ø32/ø40

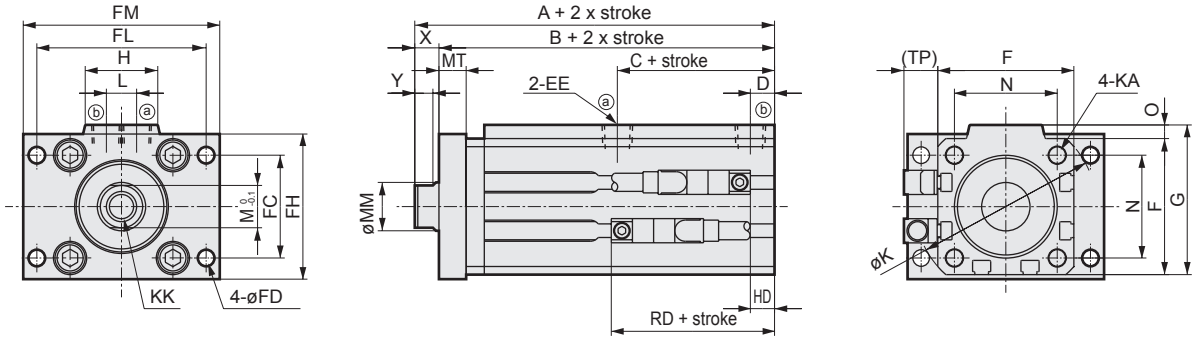

ø50/ø63

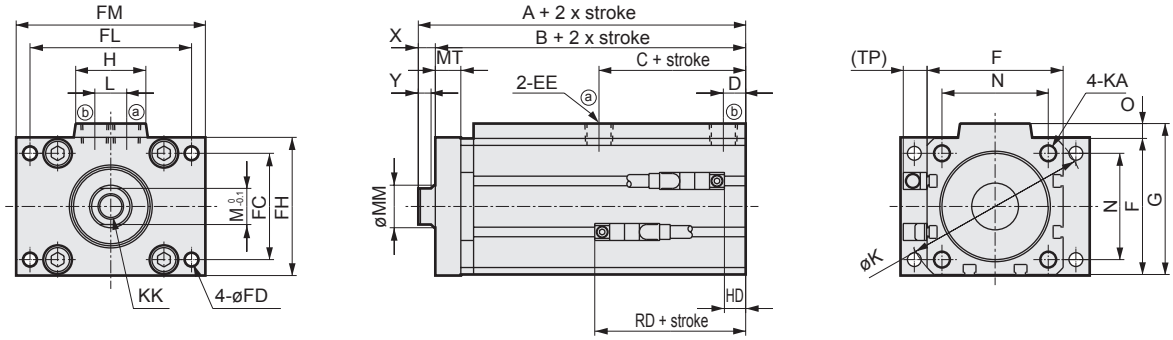

Code	Rod side flange (FA) basic dimensions																	
Bore size (mm)	A	B	C	D	EE	F	G	H	K	KA	KK	L	M	MM	N	O	X	Y
ø32	69	61	27	8	Rc1/8	45	49.5	24	60	M6 depth 11	M10 depth 15	10	14	16	34	4.5	8	6
ø40	70	62	29	8.5	Rc1/8	52	57	24	69	M6 depth 11	M10 depth 15	10	14	16	40	5	8	6
ø50	74	66	29	10.5	Rc1/4	64	71	33	86	M8 depth 13	M12 depth 15	15	17	20	50	7	8	6
ø63	85	75	38	11	Rc1/4	77	84	33	103	M10 depth 25	M16 depth 21	15	22	25	60	7	10	8

Code							With switch											
Bore size (mm)	FD	FC	FH	FL	FM	MT	T2/3H / T2/3V			T0/5H, T0/5V			T*YH/T*YV			T2YD*		
							HD	RD	TP	HD	RD	TP	HD	RD	TP	HD	RD	TP
ø32	5.5	34	48	56	65	9	9	28	0	8	29	0	8	29	5	8	29	11
ø40	5.5	40	55	62	75	9	10	29	0	9	30	0	9	30	5	9	30	11
ø50	6.5	50	66	76	89	12	11	30	0	10	31	0	10	31	5	10	31	11
ø63	9	60	82	92	108	12	19	37	0	18	38	0	18	38	5	18	38	11

LCM
LCR
LCG
LCW
LCX
STM
STG
STS/STL
STR2
UCA2
ULK*
JSK/M2
JSG
JSC3/JSC4
USSD
UFCD
USC
UB
JSB3
LMB
LML
HCM
HCA
LBC
CAC4
UCAC2
CAC-N
UCAC-N
RCS2
RCC2
PCC
SHC
MCP
GLC
MFC
BBS
RRC
GRC
RV3*
NHS
HRL
LN
Hand
Chuk
MecHnd/Chuk
ShkAbs
FJ
FK
SpdContr
Ending

Dimensions CAD (ø16, ø20, ø25)

● Head side flange (FB)

ø16

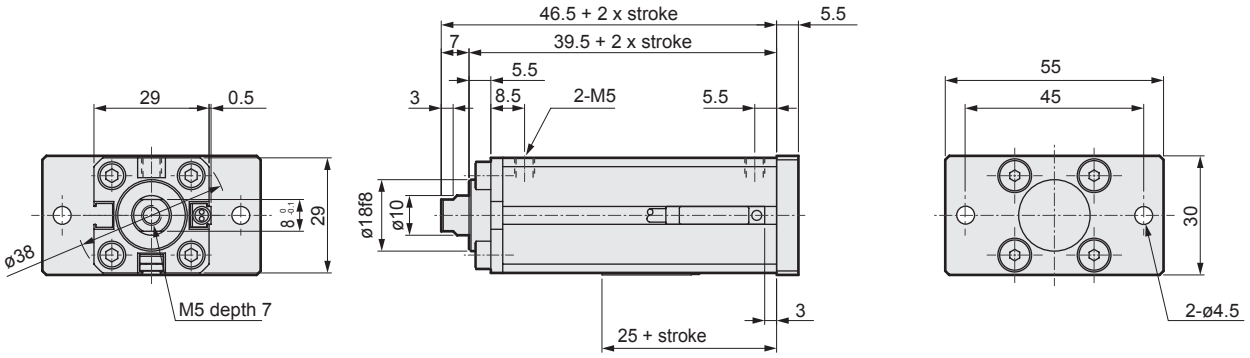

ø20/ø25

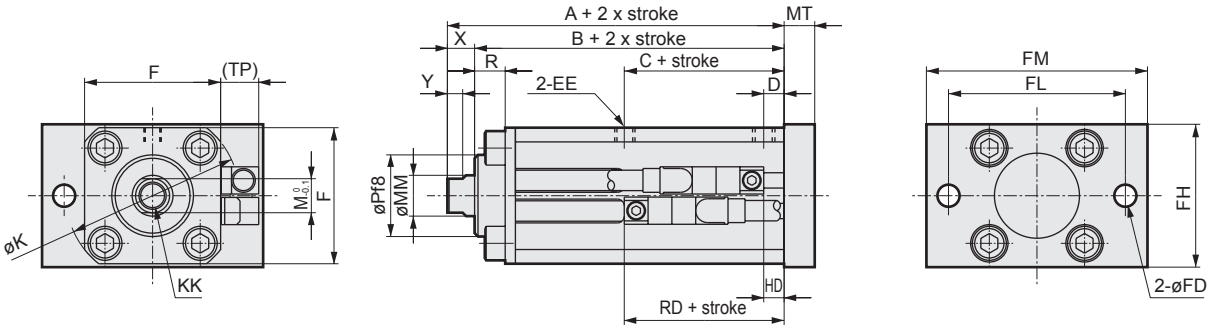

Code	Head side flange (FB) basic dimensions																		
Bore size (mm)	A	B	C	D	EE	F	K	KK	M	MM	P	R	X	Y	FD	FH	FL	FM	MT
ø20	56	48	24	5.5	M5x0.8	36	47	M8 depth 15	10	12	24	9	8	4.5	6.5	38	48	60	9
ø25	57	49	26	6	M5x0.8	40	51	M8 depth 15	10	12	24	9	8	4.5	6.5	42	52	65	9

Code	With switch											
Bore size	T2/3H / T2/3V			T0/5H, T0/5V			T*YH/T*YV			T2YD*		
(mm)	HD	RD	TP	HD	RD	TP	HD	RD	TP	HD	RD	TP
ø20	7	26	0	6	27	0	6	27	5	6	27	11
ø25	6	25	0	5	26	0	5	26	5	5	26	11

Dimensions CAD (ø32, ø40, ø50, ø63)

● Head side flange (FB)

ø32/ø40

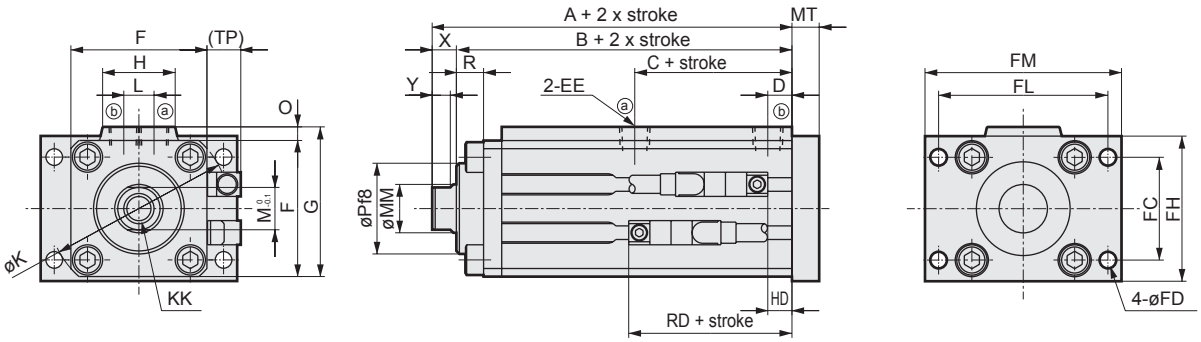

ø50/ø63

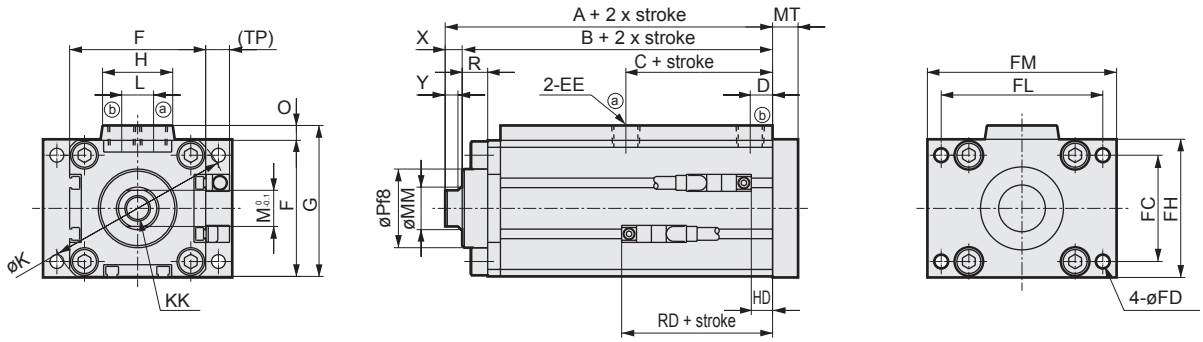

Code	Head side flange (FB) basic dimensions																		
Bore size (mm)	A	B	C	D	EE	F	G	H	K	KK	L	M	MM	O	P	R	X	Y	FD
ø32	69	61	27	8	Rc1/8	45	49.5	24	60	M10 depth 15	10	14	16	4.5	30	9	8	6	5.5
ø40	70	62	29	8.5	Rc1/8	52	57	24	69	M10 depth 15	10	14	16	5	35	9	8	6	5.5
ø50	74	66	29	10.5	Rc1/4	64	71	33	86	M12 depth 15	15	17	20	7	37	12	8	6	6.5
ø63	85	75	38	11	Rc1/4	77	84	33	103	M16 depth 21	15	22	25	7	48	12	10	8	9

Code						With switch											
Bore size (mm)	FC	FH	FL	FM	MT	T2/3H / T2/3V			T0/5H, T0/5V			T*YH/T*YV			T2YD*		
						HD	RD	TP	HD	RD	TP	HD	RD	TP	HD	RD	TP
ø32	34	48	56	65	9	9	28	0	8	29	0	8	29	5	8	29	11
ø40	40	55	62	75	9	10	29	0	9	30	0	9	30	5	9	30	11
ø50	50	66	76	89	12	11	30	0	10	31	0	10	31	5	10	31	11
ø63	60	82	92	108	12	19	37	0	18	38	0	18	38	5	18	38	11

LCM
LCR
LCG
LCW
LCX
STM
STG
STS/STL
STR2
UCA2
ULK*
JSK/M2
JSG
JSC3/JSC4
USSD
UFCD
USC
UB
JSB3
LMB
LML
HCM
HCA
LBC
CAC4
UCAC2
CAC-N
UCAC-N
RCS2
RCC2
PCC
SHC
MCP
GLC
MFC
BBS
RRC
GRC
RV3*
NHS
HRL
LN
Hand
Chuk
MecHnd/Chuk
ShkAbs
FJ
FK
SpdContr
Ending

Dimensions CAD (ø16, ø20, ø25)

● With spigot at head side (HI)

ø16

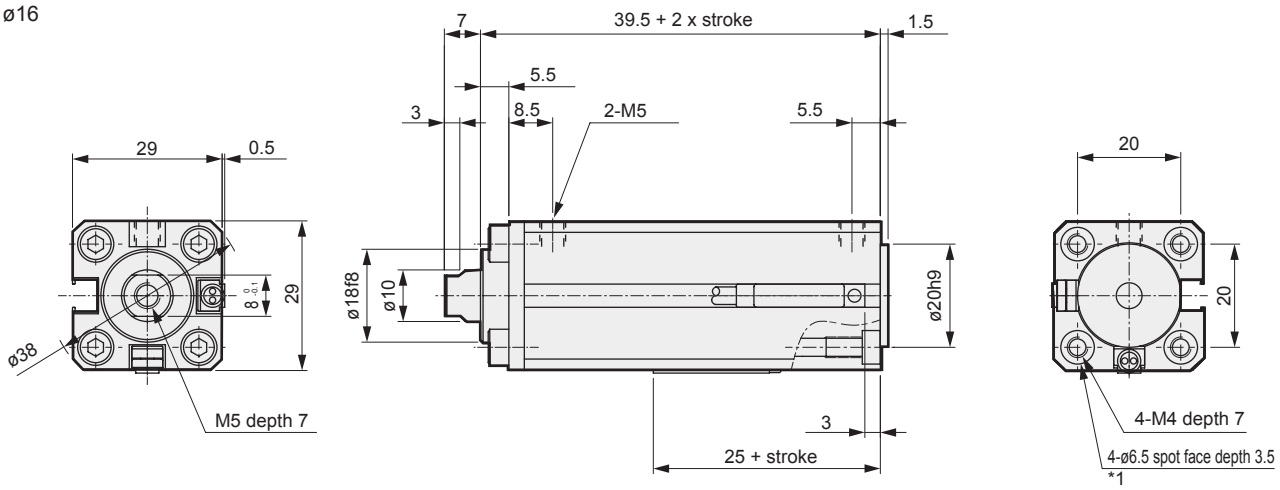

ø20/ø25

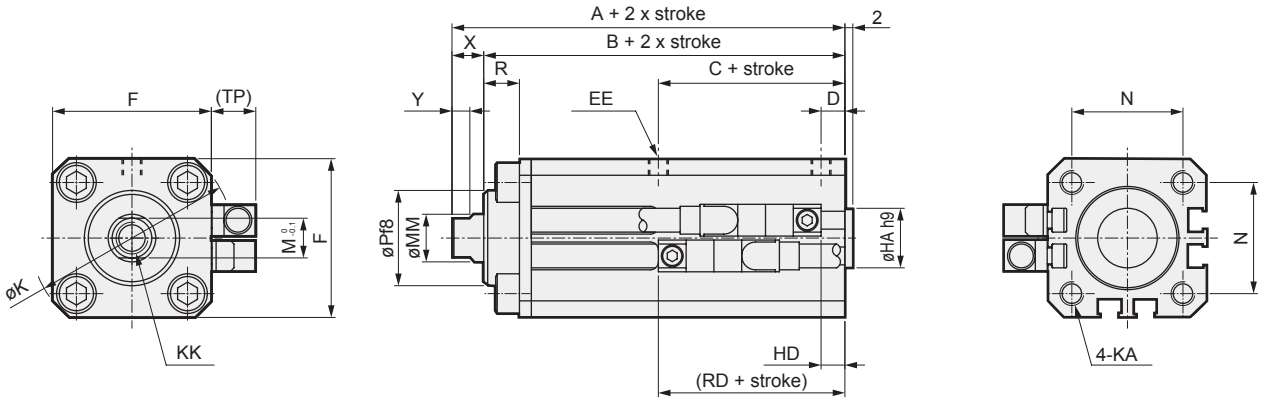

Code	Basic dimensions with spigot at head side (HI)																
Bore size (mm)	A	B	C	D	EE	F	HA	K	KA	KK	M	MM	N	P	R	X	Y
ø20	56	48	24	5.5	M5x0.8	36	13	47	M6 depth 11	M8 depth 15	10	12	25.5	24	9	8	4.5
ø25	57	49	26	6	M5x0.8	40	15	51	M6 depth 11	M8 depth 15	10	12	28	24	9	8	4.5

Code	With switch											
Bore size (mm)	T2/3H / T2/3V			T0/5H, T0/5V			T*YH/T*YV			T2YD*		
	HD	RD	TP	HD	RD	TP	HD	RD	TP	HD	RD	TP
ø20	7	26	0	6	27	0	6	27	5	6	27	11
ø25	6	25	0	5	26	0	5	26	5	5	26	11

*1: Cannot be mounted with a through bolt.

Dimensions CAD (ø32, ø40, ø50, ø63)

● With spigot at head side (HI)

ø32, ø40

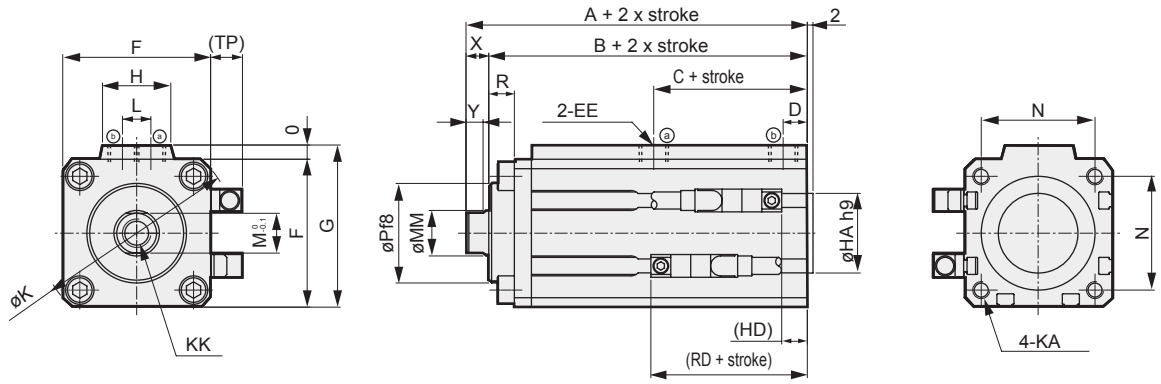

ø50, ø63

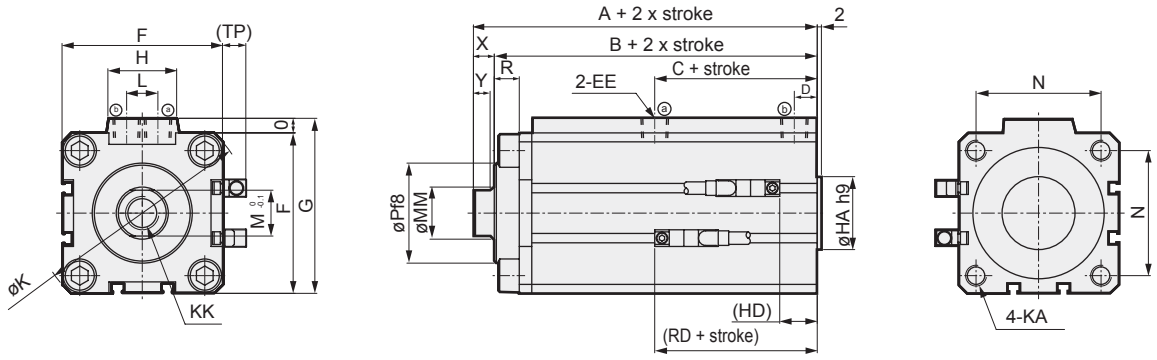

Code	Basic dimensions with spigot at head side (HI)																				
Bore size (mm)	A	B	C	D	EE	F	G	H	HA	K	KA	KK	L	M	MM	N	O	P	R	X	Y
ø32	69	61	27	8	Rc1/8	45	49.5	24	21	60	M6 depth 11	M10 depth 15	10	14	16	34	4.5	30	9	8	6
ø40	70	62	29	8.5	Rc1/8	52	57	24	28	69	M6 depth 11	M10 depth 15	10	14	16	40	5	35	9	8	6
ø50	74	66	29	10.5	Rc1/4	64	71	33	35	86	M8 depth 13	M12 depth 15	15	17	20	50	7	37	12	8	6
ø63	85	75	38	11	Rc1/4	77	84	33	35	103	M10 depth 25	M16 depth 21	15	22	25	60	7	48	12	10	8

Code	With switch											
Bore size (mm)	T2/3H / T2/3V			T0/5H, T0/5V			T*YH/T*YV			T2YD*		
	HD	RD	TP	HD	RD	TP	HD	RD	TP	HD	RD	TP
ø32	9	28	0	8	29	0	8	29	5	8	29	11
ø40	10	29	0	9	30	0	9	30	5	9	30	11
ø50	11	30	0	10	31	0	10	31	5	10	31	11
ø63	19	37	0	18	38	0	18	38	6	18	38	11

*1: Cannot be mounted with a through bolt.

Rotary clamp cylinder Double acting/anti-spatter adherence

RCC2-G4 Series

● Bore size: ø20/ø25/ø32/ø40/ø50/ø63

JIS symbol

RoHS

Specifications

* Made-to-order product.

Item		RCC2-G4					
Bore size	mm	ø20	ø25	ø32	ø40	ø50	ø63
Actuation		Double acting					
Max. working pressure	MPa	1 (≈150 psi, 10 bar)					
Min. working pressure	MPa	0.2 (≈29 psi, 2 bar)					
Proof pressure	MPa	1.6 (≈230 psi, 16 bar)					
Ambient temperature	°C	-10 (14°F) to 60 (140°F) (no freezing)					
Port size		M5		Rc1/8		Rc1/4	
Working piston speed	mm/s	50 to 200					
Cushion		With rubber cushion					
Lubrication		Not required (use turbine oil class 1 ISO VG32 if necessary for lubrication)					
Rotating angle		90°±10°					
Rotating direction		Right/Left					
Non-rotating accuracy (clamping): Default value		±1°		±0.9°		±0.7°	
Pressurized area mm^2	Pulling side	201	377	603	1055	1649	2626
	Pushing side	314	490	804	1256	1963	3117

Stroke

Bore size (mm)	Stroke (mm)	Rotor stroke (mm)	Clamp section stroke (mm)
ø20	21, 31	11	10, 20
ø25			
ø32	25, 35	15	10, 20
ø40			
ø50	40, 70	20	20, 50
ø63			

Switch specifications

● 1-color/2-color LED/for AC magnetic field proof

Item	Proximity 2-wire			Proximity 3-wire				Reed 2-wire				Proximity 2-wire
	T2H/T2V	T2YH/ T2YV	T2WH/ T2WV	T3H/T3V	T3PH/ T3PV	T3YH/ T3YV	T3WH/ T3WV	T0H/T0V		T5H/T5V		T2YD
Applications	Dedicated for programmable controller			For programmable controller, relay				For programmable controller, relay		For programmable controller, relay, IC circuit (no indicator lamp), serial connection		For programmable controller
Output method	-			NPN output	PNP output	NPN output	NPN output	-				
Pwr. supp. V.	-			10 to 28 VDC				-				
Load voltage	10 to 30 VDC		24 VDC ±10%	30 VDC or less				12/24 VDC	110 VAC	5/12/24 VDC	110 VAC	24 VDC ±10%
Load current	5 to 20 mA (*3)			100 mA or less		50 mA or less		5 to 50 mA	7 to 20 mA	50 mA or less	20 mA or less	5 to 20 mA
Indicator lamp	LED (Lit when ON)	Red/green LED (Lit when ON)	Red/green LED (Lit when ON)	LED (Lit when ON)	Yellow LED (Lit when ON)	Red/green LED (Lit when ON)	Red/green LED (Lit when ON)	LED (Lit when ON)		Without LED		Red/green LED (Lit when ON)
Leakage current	1 mA or less			10 μA or less				0 mA				1 mA or less
Weight g	1 m:18 3 m:49 5 m:80	1 m:33 3 m:87 5 m:142	1 m:18 3 m:49 5 m:80	1 m:18 3 m:49 5 m:80		1 m:33 3 m:87 5 m:142	1 m:18 3 m:49 5 m:80	1 m:18 3 m:49 5 m:80				1 m:61 3 m:166 5 m:272

*1 : Refer to Ending Page 1 for detailed switch specifications and dimensions.
*2 : Switches other than the above models, such as switches with connectors, are also available. Refer to Ending Page 1.
*3 : The max. load current is 20 mA at 25°C. The current is lower than 20 mA if the operating ambient temperature around the switch is higher than 25°C. (5 to 10 mA at 60°C)
*4 : AC magnetic field proof switch (T2YD) cannot be used in DC magnetic fields.

Theoretical thrust table

(Unit: N)

Bore size (mm)	Operating direction	Working pressure MPa								
		0.2	0.3	0.4	0.5	0.6	0.7	0.8	0.9	1.0
ø20	Push	62.8	94.2	$1.26x10^2$	$1.57x10^2$	$1.89x10^2$	$2.20x10^2$	$2.51x10^2$	$2.83x10^2$	$3.14x10^2$
	Pull	40.2	60.3	80.4	$1.01x10^2$	$1.21x10^2$	$1.41x10^2$	$1.61x10^2$	$1.81x10^2$	$2.01x10^2$
ø25	Push	98.2	$1.47x10^2$	$1.96x10^2$	$2.45x10^2$	$2.95x10^2$	$3.44x10^2$	$3.93x10^2$	$4.42x10^2$	$4.91x10^2$
	Pull	75.6	$1.13x10^2$	$1.51x10^2$	$1.89x10^2$	$2.27x10^2$	$2.64x10^2$	$3.02x10^2$	$3.40x10^2$	$3.78x10^2$
ø32	Push	$1.61x10^2$	$2.41x10^2$	$3.22x10^2$	$4.02x10^2$	$4.83x10^2$	$5.63x10^2$	$6.43x10^2$	$7.24x10^2$	$8.04x10^2$
	Pull	$1.21x10^2$	$1.81x10^2$	$2.41x10^2$	$3.02x10^2$	$3.62x10^2$	$4.22x10^2$	$4.83x10^2$	$5.43x10^2$	$6.03x10^2$
ø40	Push	$2.51x10^2$	$3.77x10^2$	$5.03x10^2$	$6.28x10^2$	$7.54x10^2$	$8.80x10^2$	$1.01x10^3$	$1.13x10^3$	$1.26x10^3$
	Pull	$2.11x10^2$	$3.17x10^2$	$4.22x10^2$	$5.28x10^2$	$6.33x10^2$	$7.39x10^2$	$8.45x10^2$	$9.50x10^2$	$1.06x10^3$
ø50	Push	$3.93x10^2$	$5.89x10^2$	$7.85x10^2$	$9.82x10^2$	$1.18x10^3$	$1.37x10^3$	$1.57x10^3$	$1.77x10^3$	$1.96x10^3$
	Pull	$3.30x10^2$	$4.95x10^2$	$6.60x10^2$	$8.25x10^2$	$9.90x10^2$	$1.15x10^3$	$1.32x10^3$	$1.48x10^3$	$1.65x10^3$
ø63	Push	$6.23x10^2$	$9.35x10^2$	$1.25x10^3$	$1.56x10^3$	$1.87x10^3$	$2.18x10^3$	$2.49x10^3$	$2.81x10^3$	$3.12x10^3$
	Pull	$5.25x10^2$	$7.88x10^2$	$1.05x10^3$	$1.31x10^3$	$1.58x10^3$	$1.84x10^3$	$2.10x10^3$	$2.36x10^3$	$2.63x10^3$

LCM
LCR
LCG
LCW
LCX
STM
STG
STS/STL
STR2
UCA2
ULK*
JSK/M2
JSG
JSC3/JSC4
USSD
UFCD
USC
UB
JSB3
LMB
LML
HCM
HCA
LBC
CAC4
UCAC2
CAC-N
UCAC-N
RCS2
RCC2
PCC
SHC
MCP
GLC
MFC
BBS
RRC
GRC
RV3*
NHS
HRL
LN
Hand
Chuk
MecHnd/Chuk
ShkAbs
FJ
FK
SpdContr
Ending

How to order

Without switch (built-in magnet for switch)

RCC2-G4 - 00 - 20 - 21 - R

With switch (built-in magnet for switch)

RCC2-G4 - 00 - 20 - 21 - R - T0H - R

Model No. — Ⓐ Mounting — Ⓑ Bore size — Ⓒ Stroke — Ⓓ Rotating direction — Ⓔ Switch model No. *1 — Ⓕ Switch quantity

Code	Description
Ⓐ Mounting	
00	Basic
FA	Rod side flange
FB	Head side flange *2
HI	With spigot at head side

Ⓑ Bore size (mm)	
20	ø20
25	ø25
32	ø32
40	ø40
50	ø50
63	ø63

Ⓒ Stroke (mm)

Stroke	Bore size	Rotor	Clamp
21	ø20/ø25	11	10
25	ø32/ø40	15	10
31	ø20/ø25	11	20
35	ø32/ø40	15	20
40	ø50/ø63	20	20
70	ø50/ø63	20	50

Ⓓ Rotating direction	
R	Clamp (Pull) looking from rod side: Rotated 90° in CW direction
L	Clamp (Pull) looking from rod side: Rotated 90° in CCW direction

Ⓔ Switch model No.

Axial lead wire	Axial lead wire	Contact	Voltage AC	Voltage DC	Indicator	Lead wire
T0H*	**T0V***	Reed	●	●	1-color LED	2-wire
T5H*	**T5V***	Reed	●	●	Without LED	2-wire
T2H*	**T2V***	Proximity		●	1-color LED	2-wire
T3H*	**T3V***	Proximity		●	1-color LED	3-wire
T3PH*	**T3PV***	Proximity		●	1-color LED	3-wire
T2WH*	**T2WV***	Proximity		●	2-color LED	2-wire
T2YH*	**T2YV***	Proximity		●	2-color LED	2-wire
T3WH*	**T3WV***	Proximity		●	2-color LED	3-wire
T3YH*	**T3YV***	Proximity		●	2-color LED	3-wire
T2YD*	**-**	Proximity		●	2-color LED for AC magn field	2-wire

*** Lead wire length (m)**	
Blank	1 m (standard)
3	3 m (option)
5	5 m (option)

Ⓕ Switch quantity	
R	1 on rod side
H	1 on head side
D	2

⚠ Precautions for model No. selection

*1: Switches are shipped with the product. Contact CKD if assembling before shipment is necessary.
*2: When the type with the switch is selected, the product could interfere with the fixing screws depending on the switch mounting surface and switch.

[Example of model No.]

RCC2-G4-00-20-21-R-T2YD3-D

Model: Rotary clamp cylinder Double acting/ anti-spatter adherence

Ⓐ Mounting : Basic
Ⓑ Bore size : ø20
Ⓒ Stroke : 21 mm
Ⓓ Rotating direction : Clamp (Pull) looking from rod side,rotated 90° in CW direction
Ⓔ Switch model No. : Strong magnetic field proof proximity T2YD switch, Lead wire length 3 m
Ⓕ Switch quantity : 2

How to order switch

SW - T0H

Switch model No. (Item Ⓔ above)

Internal structure and parts list

● RCC2-G4-20/25

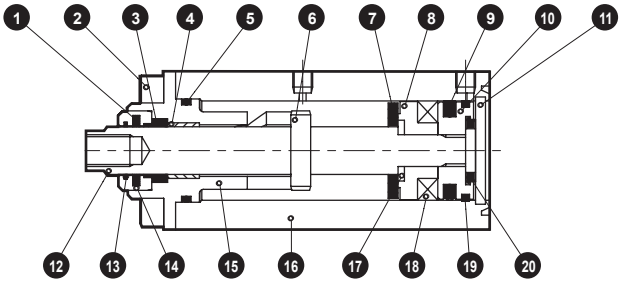

● RCC2-G4-32/40/50/63

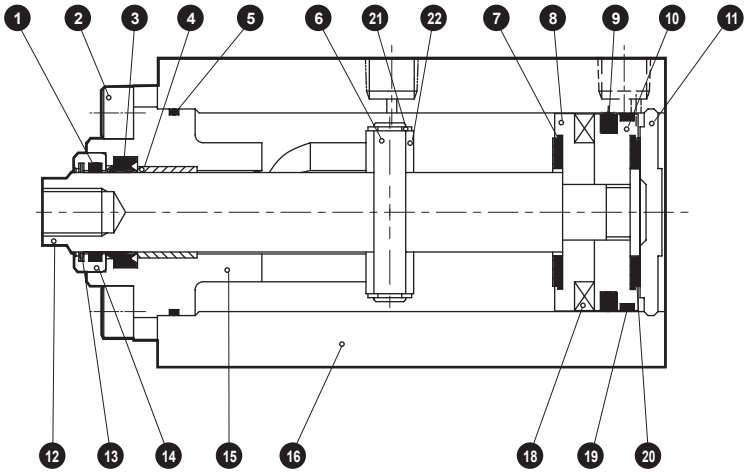

No.	Part name	Material	Remarks	No.	Part name	Material	Remarks
1	Lube keeping structure	Special rubber		12	Piston rod	Steel	
2	Hexagon socket head cap screw	Stainless steel		13	Coil scraper	Copper alloy	
3	Rod packing	Nitrile rubber		14	Holder	Aluminum alloy	
4	Bush	Copper-based		15	Rod cover	Steel	
5	Cylinder gasket	Nitrile rubber		16	Cylinder body	Aluminum alloy	
6	Pin	Steel		17	Spacer washer	Stainless steel	
7	Cushion rubber (R)	Urethane rubber		18	Magnet	Plastic magnet	
8	Spacer	ø20/ø25: Special resin ø32 to ø63: Aluminum alloy		19	Wear ring	Acetal resin	
				20	Cushion rubber (H)	Urethane rubber	
9	Piston packing	Nitrile rubber		21	E type snap ring	Steel	
10	Piston	Aluminum alloy		22	Roller	Steel	
11	Cover	ø20/ø25: Stainless steel ø32 to ø63: Aluminum Alloy					

Repair parts list

Bore size (mm)	Kit No.	Repair parts No.
ø20	RCC2-20K	3 5 7 9 13 19 20
ø25	RCC2-25K	
ø32	RCC2-32K	
ø40	RCC2-40K	
ø50	RCC2-50K	
ø63	RCC2-63K	

Note: 7 Cushion rubber (R) cannot be replaced for ø20 and ø25.
Note: Contact CKD separately if 1 Lube keeping structure is required.

LCM
LCR
LCG
LCW
LCX
STM
STG
STS/STL
STR2
UCA2
ULK*
JSK/M2
JSG
JSC3/JSC4
USSD
UFCD
USC
UB
JSB3
LMB
LML
HCM
HCA
LBC
CAC4
UCAC2
CAC-N
UCAC-N
RCS2
RCC2
PCC
SHC
MCP
GLC
MFC
BBS
RRC
GRC
RV3*
NHS
HRL
LN
Hand
Chuk
MecHnd/Chuk
ShkAbs
FJ
FK
SpdContr
Ending

Dimensions

● ø20, ø25

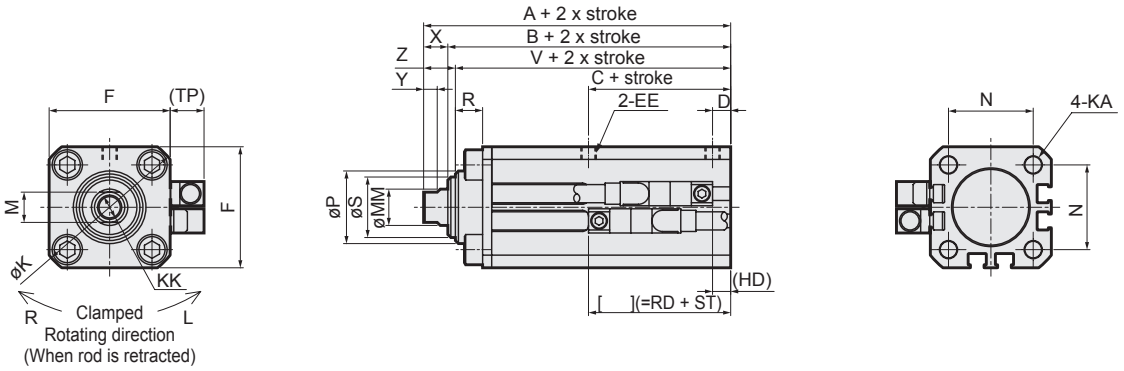

● ø32 to ø63

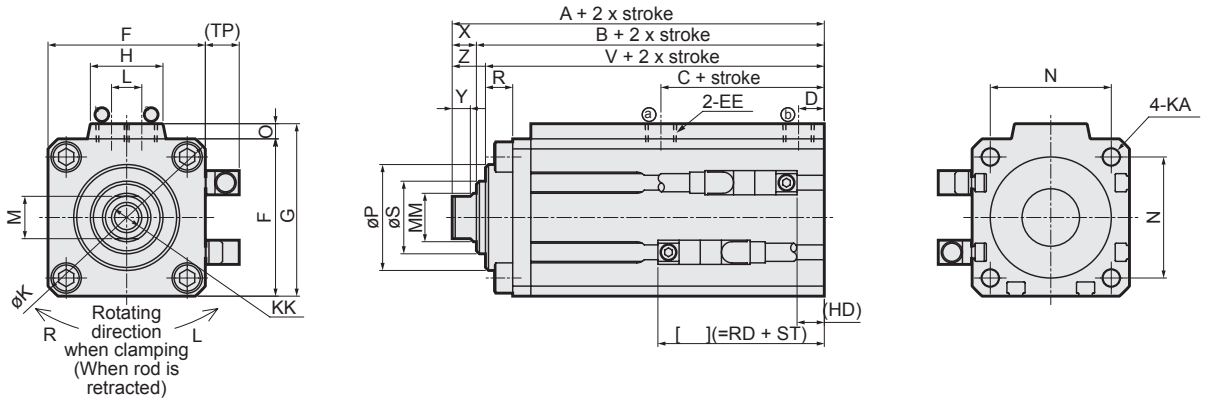

Note) The ø50 and ø63 switch grooves differ from the dimensions above. Refer to RCC2 Series double acting/single rod.

Code / Bore size	A	B	C	D	EE	F	G	H	K	KA	KK	L	M	MM
ø20	58.5	50.5	24	5.5	M5x0.8	36	-	-	47	M6 depth 11	M8 depth 15	-	10	12
ø25	59.5	51.5	26	6	M5x0.8	40	-	-	51	M6 depth 11	M8 depth 15	-	10	12
ø32	72	64	27	8	Rc1/8	45	49.5	24	60	M6 depth 11	M10 depth 15	10	14	16
ø40	73	65	29	8.5	Rc1/8	52	57	24	69	M6 depth 11	M10 depth 15	10	14	16
ø50	77	69	29	10.5	Rc1/4	64	71	33	86	M8 depth 13	M12 depth 15	15	17	20
ø63	88	78	38	11	Rc1/4	77	84	33	103	M10 depth 25	M16 depth 21	15	22	25

Code / Bore size	N	O	P	R	X	Y	V	Z	S
ø20	25.5	-	24	9	8	4.5	48	10.5	20
ø25	28	-	24	9	8	4.5	49	10.5	20
ø32	34	4.5	30	9	8	6	61	11	24
ø40	40	5	35	9	8	6	62	11	24
ø50	50	7	37	12	8	6	66	11	30
ø63	60	7	48	12	10	8	75	13	36

Switch code	T2/3H, T2/3V			T0/5H, T0/5V			T*YH, T*YV			T2YD*		
Bore size	HD	RD	TP	HD	RD	TP	HD	RD	TP	HD	RD	TP
ø20	7	26	0	6	27	0	6	27	5	6	27	11
ø25	6	25	0	5	26	0	5	26	5	5	26	11
ø32	9	28	0	8	29	0	8	29	5	8	29	11
ø40	10	29	0	9	30	0	9	30	5	9	30	11
ø50	11	30	0	10	31	0	10	31	5	10	31	11
ø63	19	37	0	18	38	0	18	38	5	18	38	11

Note: Installation method of the mountings are the same as those of RCC2 (double acting). Refer to pages 1100 to 1107.

Technical data (selection example)

[Specifications]

- Required clamping force: 400 N
- Working pressure: 0.5 MPa
- Maximum piston speed: 100 mm/s
- Lever shape
  M2:0.31 kg L:0.080 m
  A:0.1 m a:0.010 m
- Jig shape
  M1:0.04 kg D:0.020 m

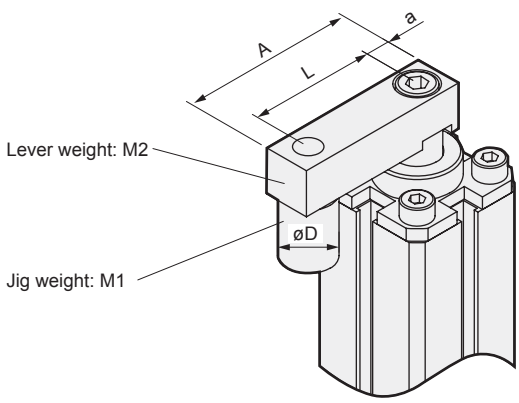

1. Calculate the required pressurized area.

$$\text{Required pressurized area (mm}^2) = \frac{\text{Required clamping force (N)}}{\text{Working pressure (MPa)x efficiency}} = \frac{400}{0.5\text{x}80\%} = 1{,}000\ (\text{mm}^2)$$

Note) Efficiency varies depending on lever length or cylinder resistance.

2. Select the cylinder size from the pressurized area (retracted side) given in the specifications list.

ø40 pressurized area: 1,055 (mm^2) > required pressurized area: 1,000 (mm^2)

3. Confirm the allowable lever length.

Working pressure 0.5 MPa, lever length 80 mm
Confirm with the graph on page 1115
→ Within usable range

[Allowable lever length]

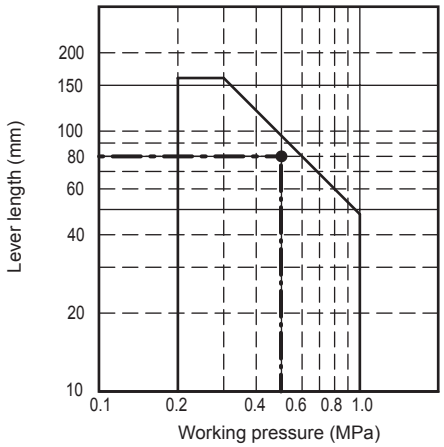

4. Confirm the allowable moment of inertia for lever.

Calculating moment of inertia
(Use the formula for concentrated load on page 1114)

$$\text{Moment of inertia } I = M_1 (R_1^2 + K_1^2) + \frac{M_2 R_2^2}{3}$$

$$R_1 = L,\ R_2 = A - a,\ K_1^2 = \frac{D^2}{8}$$

$$I = 0.04\text{x}(0.08^2 + \frac{0.02^2}{8}) + \frac{0.31\text{x}(0.1-0.01)^2}{3}$$

$$= 1.10\text{x}10^{-3}\ \text{kg}\cdot\text{m}^2$$

Moment of inertia $1.10\text{x}10^{-3}$ kg·m^2
Maximum piston speed 100 mm/s
Confirm with the graph on page 1115
→ Within usable range

[Allowable moment of inertia for lever]

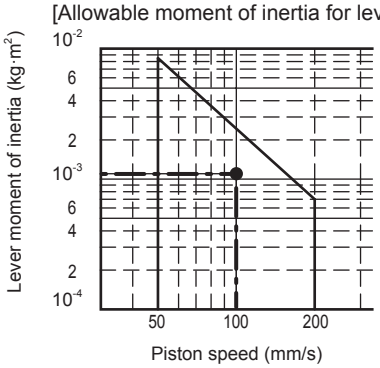

Based on the above, size ø40 is selected.

LCM
LCR
LCG
LCW
LCX
STM
STG
STS/STL
STR2
UCA2
ULK*
JSK/M2
JSG
JSC3/JSC4
USSD
UFCD
USC
UB
JSB3
LMB
LML
HCM
HCA
LBC
CAC4
UCAC2
CAC-N
UCAC-N
RCS2
RCC2
PCC
SHC
MCP
GLC
MFC
BBS
RRC
GRC
RV3*
NHS
HRL
LN
Hand
Chuk
MecHnd/Chuk
ShkAbs
FJ
FK
SpdContr
Ending

Figure for moment of inertia calculation

Shape	Sketch	Requirements	Moment of inertia I kg·m²	Rotation radius K_1^2	Remarks
Dial plate	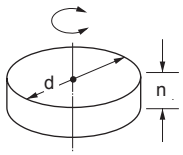	● Diameter d (m) ● Weight M (kg)	$I = \frac{Md^2}{8}$	$\frac{d^2}{8}$	● No mounting direction
Circular stepped plate	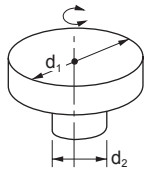	● Diameter d_1(m) d_2(m) ● Weight d_1 Part M_1 (kg) d_2 Part M_2 (kg)	$I = \frac{1}{8}(M_1d_1^2+M_2d_2^2)$	$\frac{d_1^2+d_2^2}{8}$	● Ignore when the d_2 section is extremely small compared to the d_1 section
Bar (center of rotation at end)	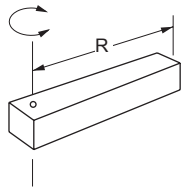	● Bar length R (m) ● Weight M (kg)	$I = \frac{MR^2}{3}$	$\frac{R^2}{3}$	● The mounting direction is horizontal.
Thin rod	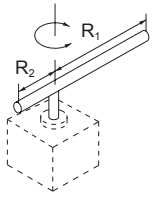	● Bar length R_1 R_2 ● Weight M_1 M_2	$I = \frac{M_1.R_1^2}{3} + \frac{M_2.R_2^2}{3}$	$\frac{R_1^2+R_2^2}{3}$	● The mounting direction is horizontal.
Bar (center of rotation / gravity)	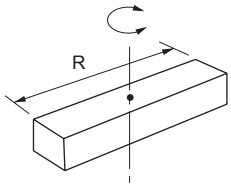	● Bar length R (m) ● Weight M (kg)	$I = \frac{MR^2}{12}$	$\frac{R^2}{12}$	● No mounting direction
Thin rectangle plate (rectangular parallelepiped)	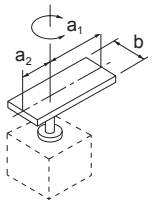	● Plate length a_1 a_2 ● Side length b ● Weight M_1 M_2	$I = \frac{M_1}{12}(4a_1^2+b^2) + \frac{M_2}{12}(4a_2^2+b^2)$	$\frac{(4a_1^2+b^2)+(4a_2^2+b^2)}{12}$	● The mounting direction is horizontal.
Rectangular parallelepiped	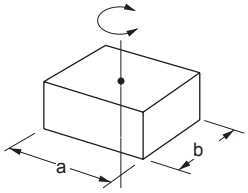	● Side length a (m) ● Weight b (m) M(kg)	$I = \frac{M}{12}(a^2+b^2)$	$\frac{a^2+b^2}{12}$	● No mounting direction
Concentrated load	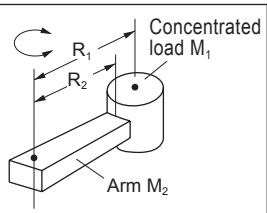	● Shape of concentrated load ● Length to center of gravity of concentrated load R_1 ● Arm length R_2 (m) ● Concentrated load weight M_1 (kg) ● Arm weight M_2 (kg)	$I = M_1(R_1^2+k_1^2) + \frac{M_2R_2^2}{3}$	Calculate k_1^2 according to shape of concentrated load	● The mounting direction is horizontal. ● When M_2 is extremely small compared to M_1, it may be calculated as $M_2 = 0$

Pneumatic components

Safety Precautions

Be sure to read this section before use.
Refer to Intro Page 73 for general information of the cylinder, and to Intro Page 80 for general information of the cylinder switch.

Product-specific cautions: Rotary clamp cylinder RCC2 Series

Design/selection

1. Common

WARNING

■ In this cylinder, the piston rod strokes while rotating (90°) during its operation.
Make sure that the lever mounted to the piston rod end does not interfere with the exterior while rotating.
If the rotation of the lever attached to the piston rod end could cause bodily injury, be sure to provide safety measures by installing a protective cover, etc.

CAUTION

■ Clamp position
- Do not clamp during a rotation operation.
  Adjust the clamping position to be approx. 3 mm or more before the stroke end position.
- Do not clamp the product so as to apply rotational force to the piston rod.
  (a) Do not clamp the product in the rotational direction.
  (b) Do not clamp the inclined portion.
  (c) Do not use if the workpiece moves while clamping.

■ Lever length and working pressure
Set the lever length and working pressure within the range shown below.

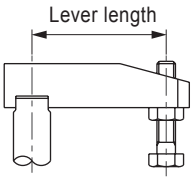

[Allowable lever length]

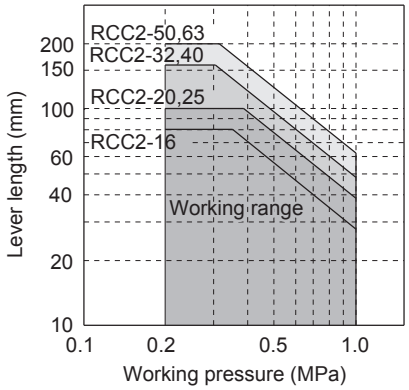

■ Lever inertia moment and piston speed
Set the lever's moment of inertia and the piston speed within the range shown below.

[Allowable moment of inertia for lever]

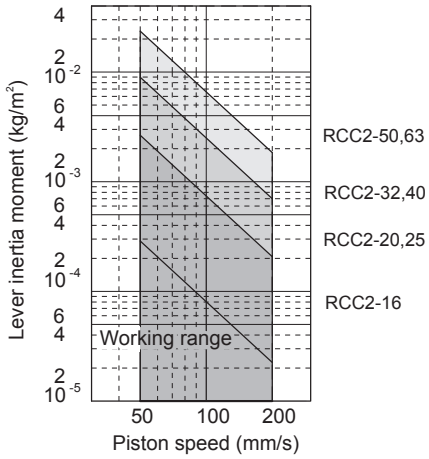

Note: The allowable lever inertia moment graph is only compatible with vertical installation

■ Working environment
Coil scraper for welding environment is not built in for ø16.

2. Anti-spatter adherence RCC2-G4

■ The durability of this cylinder is improved in comparison to standard cylinders when used in an atmosphere exposed to spatter. However, durability may be shorter than the standard cylinder when used other than in an atmosphere exposed to spatter. Do not use this cylinder in atmospheres other than those with spatter.

■ Spatter adherence prevention agent is volatile. If the agent starts drying up on the rod surface, apply the agent to the rod surface again.

■ When using the FA mounting (rod side flange), use caution with the holder protruding from the flange end.

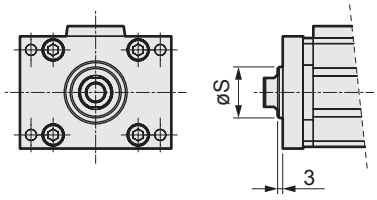

Bore size	S
ø20	20
ø25	20
ø32	24
ø40	24
ø50	30
ø63	36

LCM
LCR
LCG
LCW
LCX
STM
STG
STS/STL
STR2
UCA2
ULK*
JSK/M2
JSG
JSC3/JSC4
USSD
UFCD
USC
UB
JSB3
LMB
LML
HCM
HCA
LBC
CAC4
UCAC2
CAC-N
UCAC-N
RCS2
RCC2
PCC
SHC
MCP
GLC
MFC
BBS
RRC
GRC
RV3*
NHS
HRL
LN
Hand
Chuk
MecHnd/Chuk
ShkAbs
FJ
FK
SpdContr
Ending

Mounting, installation and adjustment

⚠ WARNING

■ In this cylinder, the piston rod strokes while rotating (90°) during its operation.

As the lever mounted to the piston rod end rotates, do not insert your hands or enter the drive zone during operation.

⚠ CAUTION

■ Mounting and removing the lever

Use the following procedures to attach and remove the lever. (Applying excessive rotational force to the piston rod may cause damage to the internal parts.)

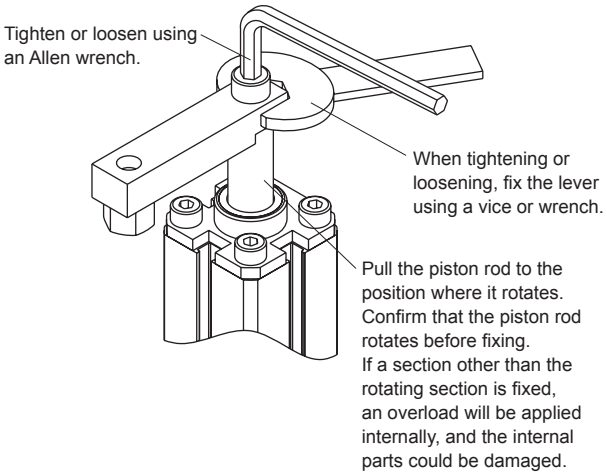

■ Piston speed

Adjust the speed within the range given in the lever moment of inertia and piston speed graphs.

PCC

Pin clamp cylinder

ø50

Special

Features

- The lever direction can be selected from 4 options.
- Two types of locating pin shape are available.
- The receiving surface position of the workpiece can be adjusted by up to 2 mm.
- Position locking mechanism can be selected.
- Spatter-proof specification can be selected.
- With cleaning holes as standard.
- Extensive mounting types are available.

CONTENTS

- Double acting/single rod (PCC) 1118
- Double acting/position locking (PCC-Q) 1118

⚠ Safety precautions 1135

Pin clamp cylinder

Double acting/single rod **PCC Series**

Double acting/position locking **PCC-Q Series**

JIS symbol 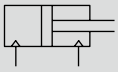
Double acting/single rod

JIS symbol 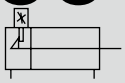
Double acting/position locking

RoHS

Common specifications

Item		PCC/PCC-Q
Bore size	mm	50
Actuation		Double acting
Working fluid		Compressed air
Max. working pressure	MPa	0.5 (≈73 psi, 5 bar)
Min. working pressure	MPa	0.2 (≈29 psi, 2 bar)
Guaranteed proof pressure	MPa	1.0 (≈150 psi, 10 bar)
Ambient temperature	°C	-10 (14°F) to 60 (140°F)
Port size		Rc1/4
Working piston speed	mm/s	50 to 300
Cushion		None
Lubrication		Not required

Theoretical clamping force

(Unit: N)

Pressure (MPa)	0.2	0.3	0.4	0.5
Clamping force (N)	329	494	659	824

Clamp specifications

Item		PCC/PCC-Q	
Clamp stroke length	mm	With shim	Without shim
		10 to 12	12
Relief stroke	mm	5	
Locating pin shape		Round shape	Diamond shape
Clamp lever		Single jaw	

Position locking part specifications

Item		PCC-Q
Position locking method		Round slit method
Lock direction		Locked when clamping (cylinder forward)
Lock force	N	943
Min. working pressure	MPa	0.25 (≈36 psi, 2.5 bar) (Note)
Max. working pressure	MPa	0.5 (≈73 psi, 5 bar)
Port size		Rc1/4
Lubrication		Not available

Note: Depending on the installation condition, it may start moving at 0.05 MPa. Therefore, pay attention to residual and exhaust pressure.

Cylinder weight

(Unit: kg)

Locating pin diameter	Standard					Position locking			
	A1	B1	C1	C2	D1	A1	B1	C1	C2
ø12.5 to ø13.0	1.8	2.0	2.0	2.0	1.7	2.2	2.4	2.4	2.4
ø14.5 to ø15.0	1.8	2.0	2.0	2.0	1.7	2.2	2.4	2.4	2.4
ø15.5 to ø16.0	1.8	2.0	2.0	2.0	1.7	2.2	2.4	2.4	2.4
ø17.5 to ø18.0	1.9	2.0	2.0	2.0	1.8	2.3	2.4	2.4	2.4
ø19.5 to ø20.0	1.9	2.1	2.0	2.0	1.8	2.3	2.5	2.4	2.4
ø24.5 to ø25.0	2.0	2.1	2.1	2.1	1.9	2.4	2.5	2.5	2.5
ø29.5 to ø30.0	2.1	2.2	2.2	2.2	2.0	2.5	2.6	2.6	2.6

Switch specifications

Item	Proximity 2-wire		
	T2YD	T2YDT	T2YDU (Made to order)
Applications	Dedicated for programmable controller		
Indicator lamp	Red/green LED (Lit when ON)		
Load voltage	24 VDC ±10%		
Load current	5 to 20 mA		
Internal voltage drop	6 V or less		
Leakage current	1.0 mA or less		
Output delay time *1 (ON Delay, OFF delay)	60 ms or less		
Lead wire length	1 m (oil resistant vinyl cabtyre cable ø6, 0.5 mm^2 x 2-conductor) *2	1 m (flame-resistant vinyl cabtyre cable ø6, 0.5 mm^2 x 2-conductor) *2	0.3 m (flame-resistant vinyl cabtyre cable with M12 cable connector, AWG20, 2-conductor)
Insulation resistance	100 MΩ and over with 500 VDC megger		
Withstand voltage	No failure after 1 minute of 1,000 VAC application.		
Max. shock resistance	980 m/s^2		
Ambient temperature	-10 to +60°C		
Degree of protection	JIS C0920 (water-tight), IEC standards IP67, oil resistance		
Weight g	1 m:61 3 m:166 5 m:272		35

*1: Indicates the time from magnetic sensor detection of the piston magnet until switch output.
*2: 3 m and 5 m lead wires are available as options.
3: As the switch for AC magnetic field (T2YD) is for spot welding machine, it cannot be used with arc welding machine (DC).
*4: Flame-resistant lead wires are available as options.

LCM
LCR
LCG
LCW
LCX
STM
STG
STS/STL
STR2
UCA2
ULK*
JSK/M2
JSG
JSC3/JSC4
USSD
UFCD
USC
UB
JSB3
LMB
LML
HCM
HCA
LBC
CAC4
UCAC2
CAC-N
UCAC-N
RCS2
RCC2
PCC
SHC
MCP
GLC
MFC
BBS
RRC
GRC
RV3*
NHS
HRL
LN
Hand
Chuk
MecHnd/Chuk
ShkAbs
FJ
FK
SpdContr
Ending

Pin clamp cylinder PCC Series

The lever direction can be selected from 4 options.

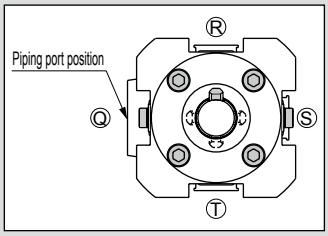

Two types of locating pin shape are available.

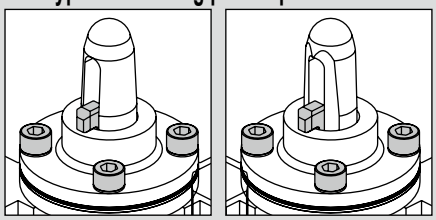

Round pin | Diamond pin

The receiving surface position of the workpiece can be adjusted by up to 2 mm (when unit with shim is selected)

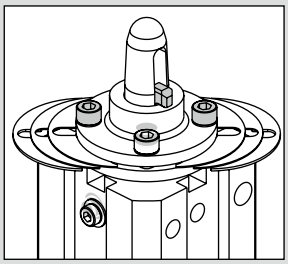

Adjustable by 0.5 mm to 2 mm
One side 1 × t1 + 2 × t0.5
(one side: 3, both sides: 6)

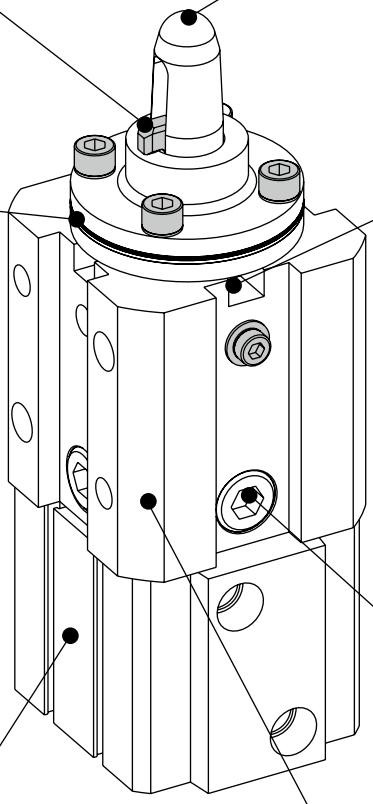

Spatter-proof

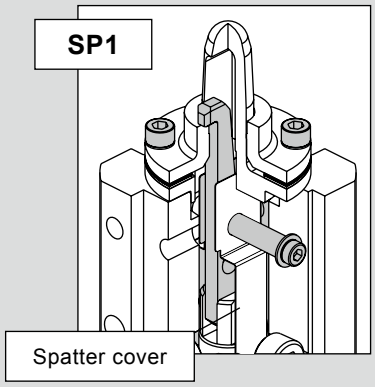

SP1: Prevents spatter deposits in the clamp lever cam groove.

With cleaning holes as standard.

As the cleaning hole has tapered pipe threading (Rc3/8), it can be used as an air blow port for internal cleaning.

Position locking mechanism can be selected.

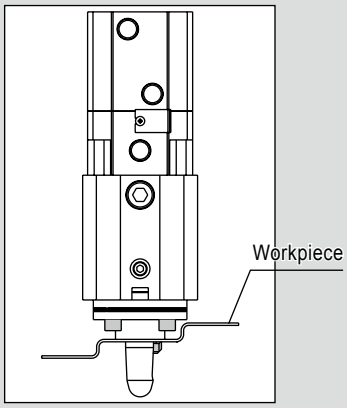

- It holds the clamp position regardless of the thickness of the workpiece
- It prevents the workpiece from falling out in emergencies.

Note: The D1 type is not supported.

Extensive mounting types are available.

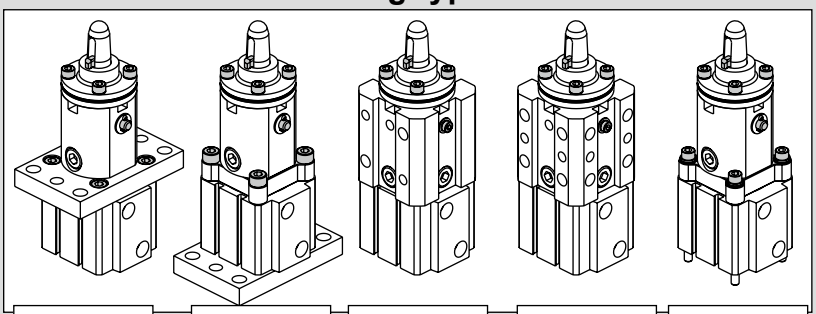

A1	B1	C1	C2	D1
Top flange	Bottom flange	Side mounting (2 surfaces)	Side mounting (2 surfaces)	Bottom mounting

LCM
LCR
LCG
LCW
LCX
STM
STG
STS/STL
STR2
UCA2
ULK*
JSK/M2
JSG
JSC3/JSC4
USSD
UFCD
USC
UB
JSB3
LMB
LML
HCM
HCA
LBC
CAC4
UCAC2
CAC-N
UCAC-N
RCS2
RCC2
PCC
SHC
MCP
GLC
MFC
BBS
RRC
GRC
RV3*
NHS
HRL
LN
Hand
Chuk
MecHnd/Chuk
ShkAbs
FJ
FK
SpdContr
Ending

How to order

Basic

PCC — C1 5 R 177 D - T2YD D - 2 SP1

With position locking

PCC - Q C1 5 R 177 D - T2YD D - 2 SP1

Model No.

Ⓐ Mounting *1

Ⓑ Clamp lever direction

Ⓒ Locating pin diameter *2

Ⓓ Locating pin shape

Ⓔ Switch model No. *3, *5

Ⓕ Switch quantity

Ⓖ Shim

Ⓗ Spatter-proof

Code	Description
Ⓐ Mounting	*1
A1	Top flange ●:ø10H7 ○:ø11
B1	Bottom flange ●:ø10H7 ○:ø11
C1	Side mounting (2 surfaces) Port position Locating pin ●:ø8H7 ○:M10 Both mounting surfaces have the same shape
C2	Side mounting (2 surfaces) Port position Locating pin ●:ø8H7 ○:M10 Both mounting surfaces have the same shape
D1	Bottom mount 4-M6 bolt

Ⓑ Clamp lever direction	
Q	R: Clamp lever; Q: Port position; S; T
R	
S	
T	

Ⓒ Locating pin diameter	*2
Refer to the locator pin diameter on the following page.	

Ⓓ Locating pin shape	
Blank	Round pin
D	Diamond pin

Ⓔ Switch model No.	*3, *5
Code	**Type**
T2YD*	2-color display for AC magnetic field
T2YDT*	
T2YDU	
*** Lead wire length**	
Blank	1 m
3	3 m
5	5 m

Ⓕ Switch quantity	
Blank	Without switch
R	With unclamp side switch
H	With clamp side switch
D	With switches on both sides

Ⓖ Shim	
0	Without shim
2	With 2 mm shim

Ⓗ Spatter-proof	
Blank	No spatter-proofing
SP1	With spatter cover

⚠ Precautions for model No. selection

*1 : When the position locking (Q) is selected, D1 (bottom mount) cannot be selected.
*2 : Consult with CKD for other locating pin diameters.
*3 : T type switches can also be installed. Consult with CKD for H and V type strong magnetic field switches.
*4 : Refer to pages 1118 and 1135 for the switch specifications and usage guidelines.
*5 : Switches are shipped with the product.

[Example of model No.]

PCC-C15R177D-T2YDD-2SP1

Model: Pin clamp cylinder double acting/single rod

Ⓐ Mounting	: Side mounting
Ⓑ Clamp lever direction	: R
Ⓒ Locating pin diameter	: ø17.7
Ⓓ Locating pin shape	: Diamond pin
Ⓔ Switch model No.	: Strong magnetic field proof switch T2YD, 1 m lead wire
Ⓕ Switch quantity	: With switches on both sides
Ⓖ Shim	: With 2 mm shim
Ⓗ Spatter protection	: With spatter cover

LCM
LCR
LCG
LCW
LCX
STM
STG
STS/STL
STR2
UCA2
ULK*
JSK/M2
JSG
JSC3/JSC4
USSD
UFCD
USC
UB
JSB3
LMB
LML
HCM
HCA
LBC
CAC4
UCAC2
CAC-N
UCAC-N
RCS2
RCC2
PCC
SHC
MCP
GLC
MFC
BBS
RRC
GRC
RV3*
NHS
HRL
LN
Hand
Chuk
MecHnd/Chuk
ShkAbs
FJ
FK
SpdContr
Ending

(Ⓒ Locating pin diameter)

Ⓒ Locating pin diameter					
Code	**Locating pin diameter**	**Applicable workpiece hole diameter**	**Code**	**Locating pin diameter**	**Applicable workpiece hole diameter**
125	ø12.5	ø13	**179**	ø17.9	ø18
127	ø12.7		**180**	ø18.0	
128	ø12.8		**195**	ø19.5	ø20
129	ø12.9		**197**	ø19.7	
130	ø13.0		**198**	ø19.8	
145	ø14.5	ø15	**199**	ø19.9	
147	ø14.7		**200**	ø20.0	
148	ø14.8		**245**	ø24.5	ø25
149	ø14.9		**247**	ø24.7	
150	ø15.0		**248**	ø24.8	
155	ø15.5	ø16	**249**	ø24.9	
157	ø15.7		**250**	ø25.0	
158	ø15.8		**295**	ø29.5	ø30
159	ø15.9		**297**	ø29.7	
160	ø16.0		**298**	ø29.8	
175	ø17.5	ø18	**299**	ø29.9	
177	ø17.7		**300**	ø30.0	
178	ø17.8				

Internal structure and parts list (PCC-A1)

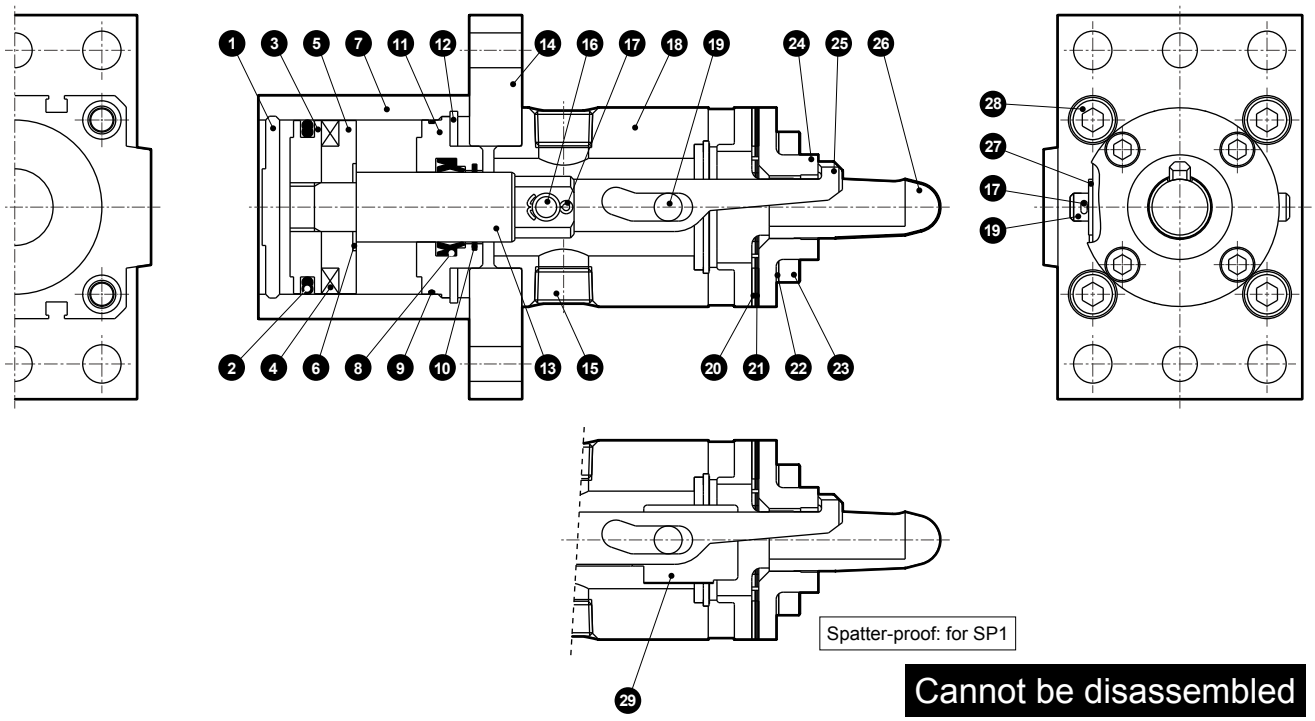

Cannot be disassembled

No.	Part name	Material	No.	Part name	Material
1	Cover	Aluminum alloy	16	Hinge pin (2)	Steel
2	Piston packing	Nitrile rubber	17	Split pin	Steel
3	Piston	Aluminum alloy	18	Guide	Aluminum alloy
4	Piston magnet	Plastic magnet	19	Hinge pin (1)	Steel
5	Spacer	Special resin	20	Shim 1	Stainless steel
6	Spacer washer	Stainless steel	21	Shim 0.5	Stainless steel
7	Body	Aluminum alloy	22	Conical spring washer	Steel
8	Rod packing	Nitrile rubber	23	Hexagon socket head cap screw	Steel
9	Rod metal gasket	Nitrile rubber	24	Spacer	Steel
10	Coil scraper	Phosphor bronze	25	Clamp lever	Steel
11	Rod metal	Special aluminum	26	Locating pin	Steel
12	C type snap ring	Steel	27	Plain washer	Steel
13	Piston rod	Steel	28	Hexagon socket head cap screw	Steel
14	Flange	Aluminum alloy	29	Spatter cover	Copper alloy
15	Plug	Steel			

Internal structure and parts list (PCC-B1)

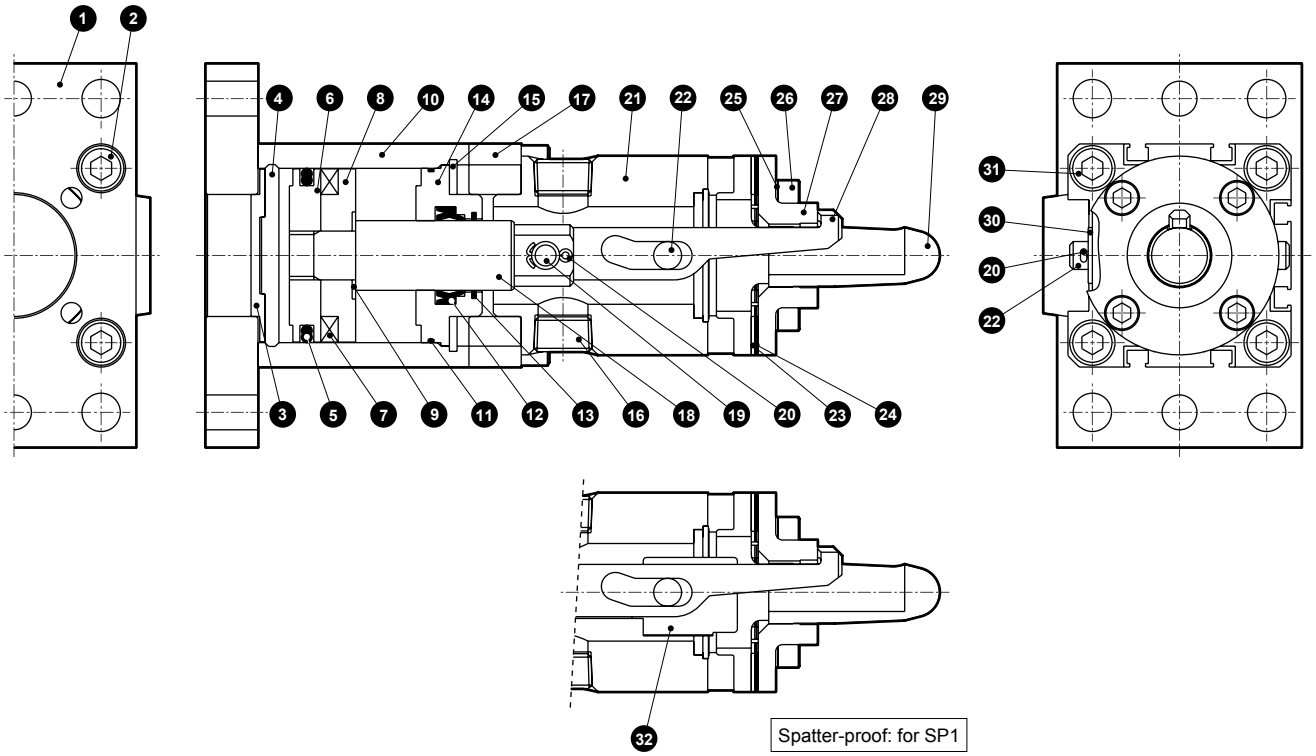

Cannot be disassembled

No.	Part name	Material	No.	Part name	Material
1	Flange	Aluminum alloy	17	Collar	Aluminum alloy
2	Hexagon socket head cap screw	Steel	18	Piston rod	Steel
3	Spigot ring	Aluminum alloy	19	Hinge pin (2)	Steel
4	Cover	Aluminum alloy	20	Split pin	Steel
5	Piston packing	Nitrile rubber	21	Guide	Aluminum alloy
6	Piston	Aluminum alloy	22	Hinge pin (1)	Steel
7	Piston magnet	Plastic magnet	23	Shim 1	Stainless steel
8	Spacer	Special resin	24	Shim 0.5	Stainless steel
9	Spacer washer	Stainless steel	25	Conical spring washer	Steel
10	Body	Aluminum alloy	26	Hexagon socket head cap screw	Steel
11	Rod metal gasket	Nitrile rubber	27	Spacer	Steel
12	Rod packing	Nitrile rubber	28	Clamp lever	Steel
13	Coil scraper	Phosphor bronze	29	Locating pin	Steel
14	Rod metal	Special aluminum	30	Plain washer	Steel
15	C type snap ring	Steel	31	Hexagon socket head cap screw	Steel
16	Plug	Steel	32	Spatter cover	Copper alloy

Internal structure and parts list (PCC-C1, PCC-C2)

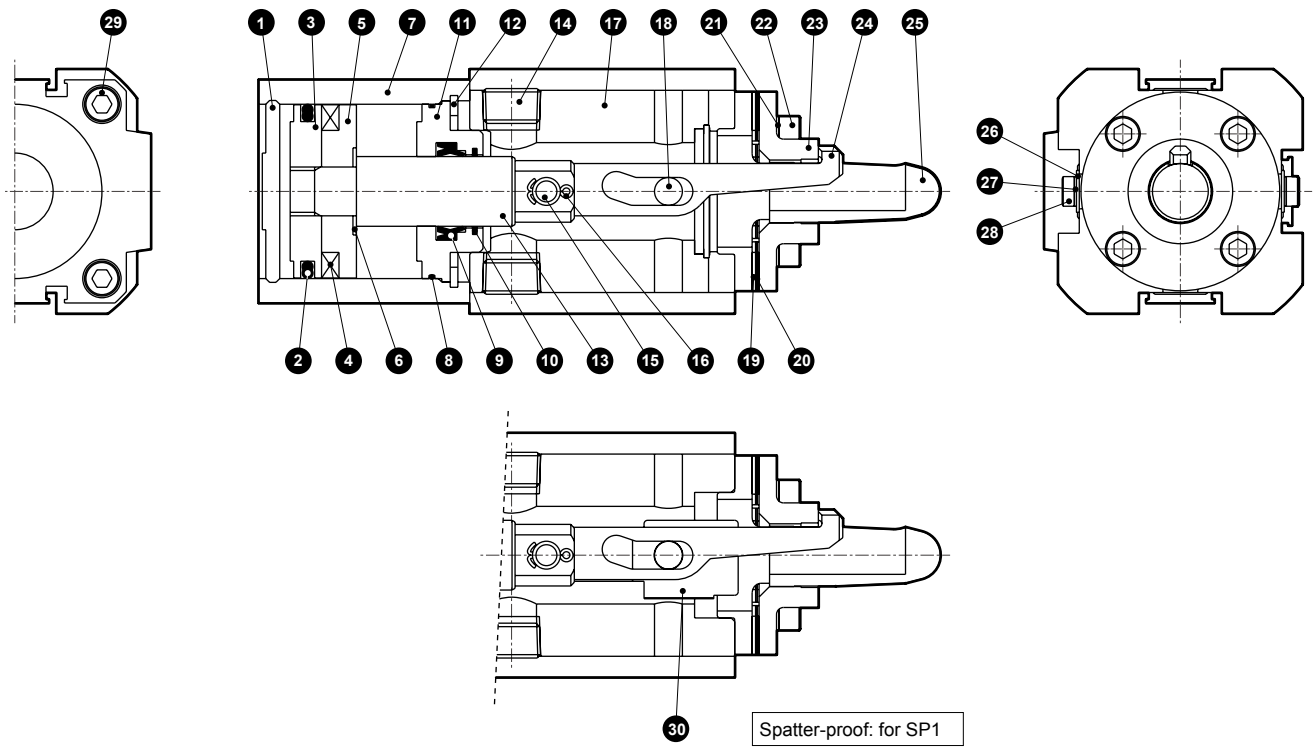

Cannot be disassembled

No.	Part name	Material	No.	Part name	Material
1	Cover	Aluminum alloy	16	Split pin	Steel
2	Piston packing	Nitrile rubber	17	Guide	Aluminum alloy
3	Piston	Aluminum alloy	18	Hinge pin (1)	Steel
4	Piston magnet	Plastic magnet	19	Shim 1	Stainless steel
5	Spacer	Special resin	20	Shim 0.5	Stainless steel
6	Spacer washer	Stainless steel	21	Conical spring washer	Steel
7	Body	Aluminum alloy	22	Hexagon socket head cap screw	Steel
8	Rod metal gasket	Nitrile rubber	23	Spacer	Steel
9	Rod packing	Nitrile rubber	24	Clamp lever	Steel
10	Coil scraper	Phosphor bronze	25	Locating pin	Steel
11	Rod metal	Special aluminum	26	Plain washer	Steel
12	C type snap ring	Steel	27	Conical spring washer	Steel
13	Piston rod	Steel	28	Hexagon socket head cap screw	Steel
14	Plug	Steel	29	Hexagon socket head cap screw	Steel
15	Hinge pin (2)	Steel	30	Spatter cover	Copper alloy

LCM
LCR
LCG
LCW
LCX
STM
STG
STS/STL
STR2
UCA2
ULK*
JSK/M2
JSG
JSC3/JSC4
USSD
UFCD
USC
UB
JSB3
LMB
LML
HCM
HCA
LBC
CAC4
UCAC2
CAC-N
UCAC-N
RCS2
RCC2
PCC
SHC
MCP
GLC
MFC
BBS
RRC
GRC
RV3*
NHS
HRL
LN
Hand
Chuk
MecHnd/Chuk
ShkAbs
FJ
FK
SpdContr
Ending

Internal structure and parts list (PCC-D1)

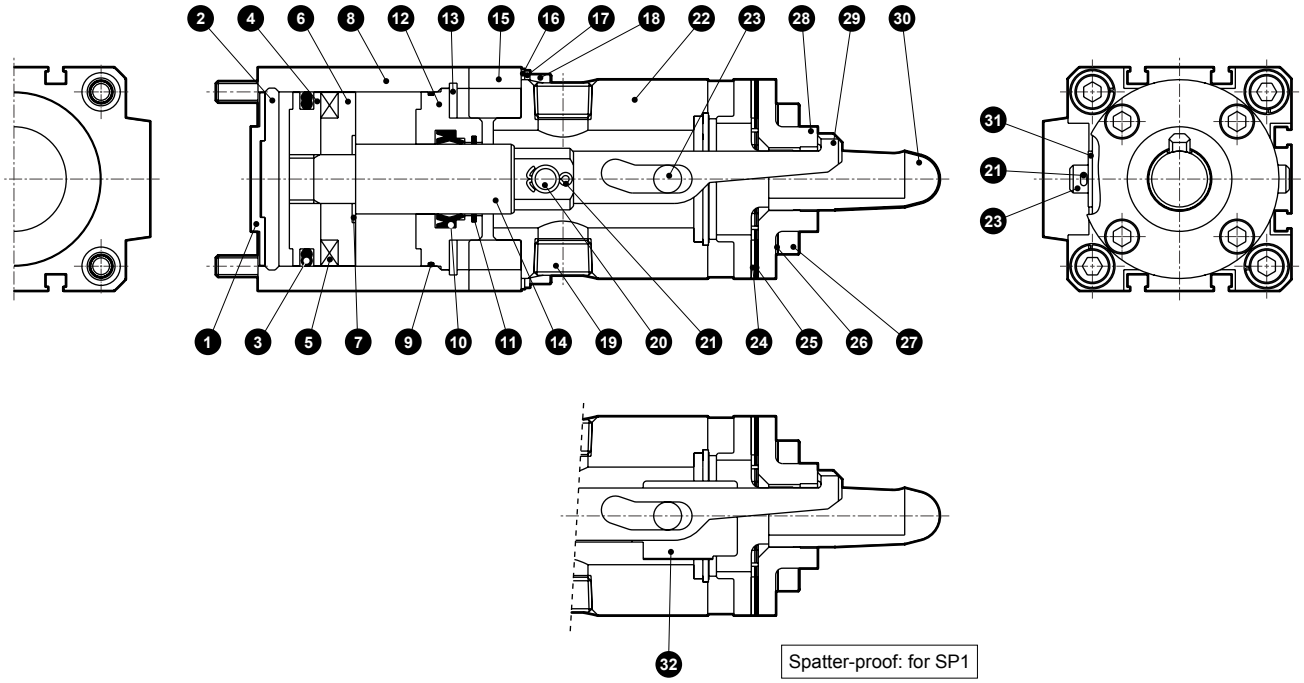

Cannot be disassembled

No.	Part name	Material	No.	Part name	Material
1	Spigot ring	Aluminum alloy	17	Spring washer	Steel
2	Cover	Aluminum alloy	18	Hexagon socket head cap screw	Steel
3	Piston packing	Nitrile rubber	19	Plug	Steel
4	Piston	Aluminum alloy	20	Hinge pin (2)	Steel
5	Piston magnet	Plastic magnet	21	Split pin	Steel
6	Spacer	Special resin	22	Guide	Aluminum alloy
7	Spacer washer	Stainless steel	23	Hinge pin (1)	Steel
8	Body	Aluminum alloy	24	Shim 1	Stainless steel
9	Rod metal gasket	Nitrile rubber	25	Shim 0.5	Stainless steel
10	Rod packing	Nitrile rubber	26	Conical spring washer	Steel
11	Coil scraper	Phosphor bronze	27	Hexagon socket head cap screw	Steel
12	Rod metal	Special aluminum	28	Spacer	Steel
13	C type snap ring	Steel	29	Clamp lever	Steel
14	Piston rod	Steel	30	Locating pin	Steel
15	Collar	Aluminum alloy	31	Plain washer	Steel
16	Plain washer	Steel	32	Spatter cover	Copper alloy

Dimensions (PCC-A1, PCC-QA1)

● PCC-A1

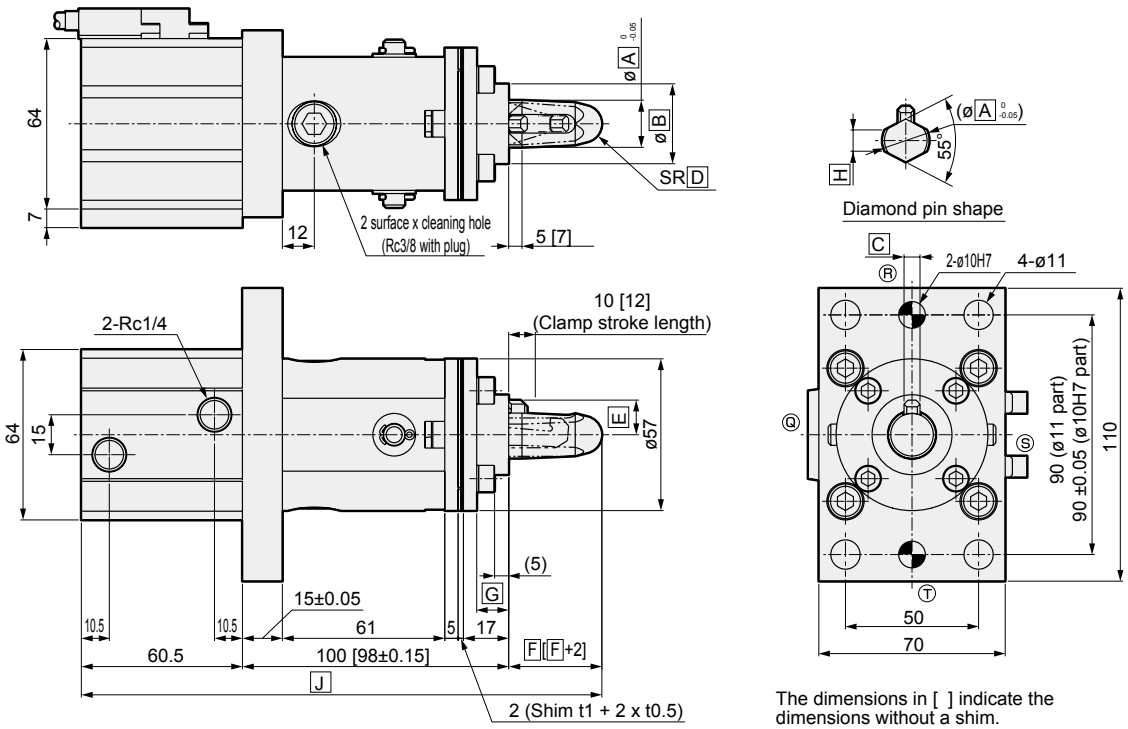

The dimensions in [ ] indicate the dimensions without a shim.

● PCC-QA1

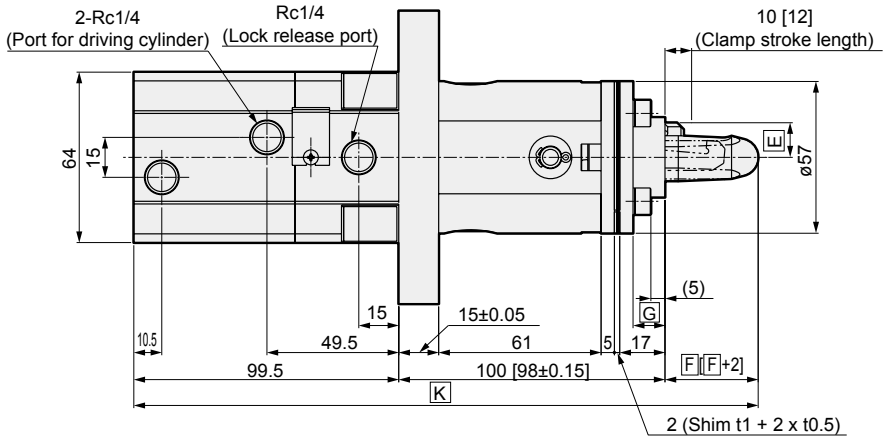

Code Locating pin ø (mm)	Common dimensions (mm)									
	A	B	C	D	E	F	G	H	J	K
ø12.5	12.5	30	4.5	5	9.5	30	12	6	190.5	229.5
ø12.7	12.7	30	4.5	5	9.5	30	12	6	190.5	229.5
ø12.8	12.8	30	4.5	5	9.5	30	12	6	190.5	229.5
ø12.9	12.9	30	4.5	5	9.5	30	12	6	190.5	229.5
ø13.0	13.0	30	4.5	5	10	30	12	6	190.5	229.5
ø14.5	14.5	30	6	5	11	30	12	7	190.5	229.5
ø14.7	14.7	30	6	5	11	30	12	7	190.5	229.5
ø14.8	14.8	30	6	5	11	30	12	7	190.5	229.5
ø14.9	14.9	30	6	5	11	30	12	7	190.5	229.5
ø15.0	15.0	30	6	6	11.5	30	12	7	190.5	229.5
ø15.5	15.5	30	6	6	11.5	30	12	7	190.5	229.5
ø15.7	15.7	30	6	6	11.5	30	12	7	190.5	229.5
ø15.8	15.8	30	6	6	11.5	30	12	7	190.5	229.5
ø15.9	15.9	30	6	6	11.5	30	12	7	190.5	229.5
ø16.0	16.0	30	6	6.5	12	30	12	7	190.5	229.5
ø17.5	17.5	30	6	7	13	35	12	8	195.5	234.5
ø17.7	17.7	30	6	7	13	35	12	8	195.5	234.5
ø17.8	17.8	30	6	7	13	35	12	8	195.5	234.5

Code Locating pin ø (mm)	Common dimensions (mm)									
	A	B	C	D	E	F	G	H	J	K
ø17.9	17.9	30	6	7	13	35	12	8	195.5	234.5
ø18.0	18.0	30	6	7	13.5	35	12	8	195.5	234.5
ø19.5	19.5	30	6	8	14	35	12	10	195.5	234.5
ø19.7	19.7	30	6	8	14	35	12	10	195.5	234.5
ø19.8	19.8	30	6	8	14	35	12	10	195.5	234.5
ø19.9	19.9	30	6	8	14	35	12	10	195.5	234.5
ø20.0	20.0	30	6	8	14.5	35	12	10	195.5	234.5
ø24.5	24.5	40	6	9	16.5	35	11.5	12	195.5	234.5
ø24.7	24.7	40	6	9	16.5	35	11.5	12	195.5	234.5
ø24.8	24.8	40	6	9	16.5	35	11.5	12	195.5	234.5
ø24.9	24.9	40	6	9	16.5	35	11.5	12	195.5	234.5
ø25.0	25.0	40	6	10	17	35	11.5	12	195.5	234.5
ø29.5	29.5	40	6	12	19.5	35	11.5	14	195.5	234.5
ø29.7	29.7	40	6	12	19.5	35	11.5	14	195.5	234.5
ø29.8	29.8	40	6	12	19.5	35	11.5	14	195.5	234.5
ø29.9	29.9	40	6	12	19.5	35	11.5	14	195.5	234.5
ø30.0	30.0	40	6	12.5	20	35	11.5	15	195.5	234.5

LCM
LCR
LCG
LCW
LCX
STM
STG
STS/STL
STR2
UCA2
ULK*
JSK/M2
JSG
JSC3/JSC4
USSD
UFCD
USC
UB
JSB3
LMB
LML
HCM
HCA
LBC
CAC4
UCAC2
CAC-N
UCAC-N
RCS2
RCC2
PCC
SHC
MCP
GLC
MFC
BBS
RRC
GRC
RV3*
NHS
HRL
LN
Hand
Chuk
MecHnd/Chuk
ShkAbs
FJ
FK
SpdContr
Ending

Dimensions (PCC-B1, PCC-QB1)

● PCC-B1

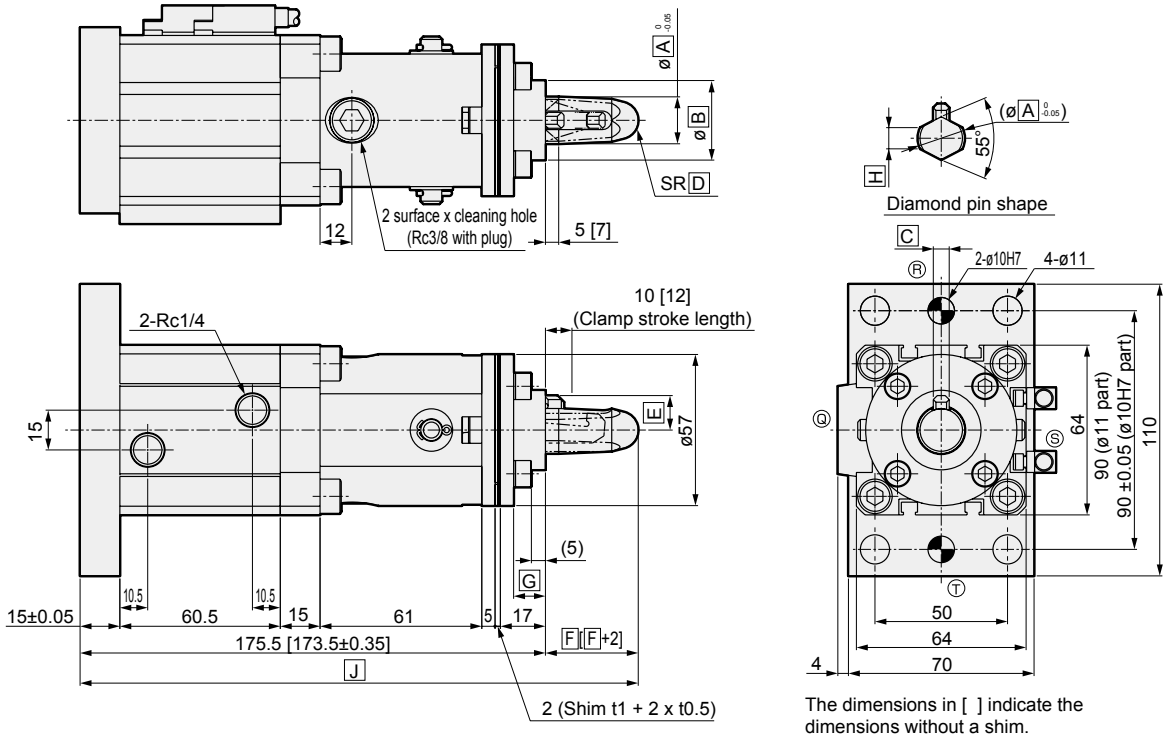

The dimensions in [ ] indicate the dimensions without a shim.

● PCC-QB1

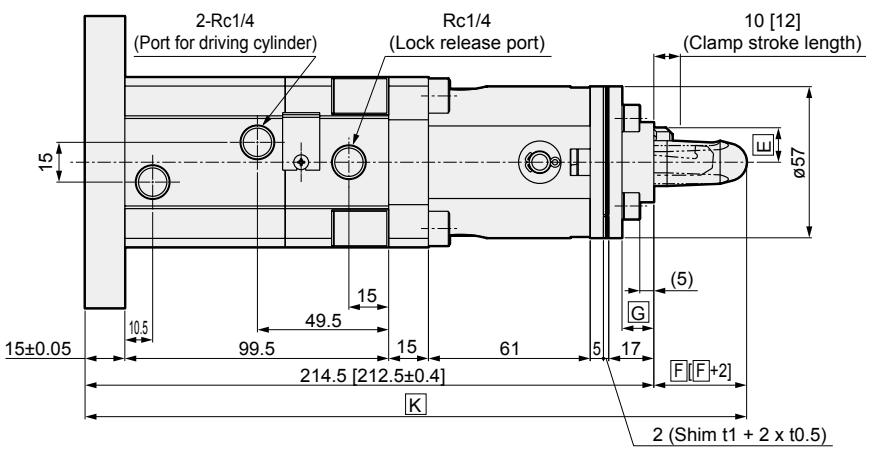

Code Locating pin ø (mm)	Common dimensions (mm)									
	A	B	C	D	E	F	G	H	J	K
ø12.5	12.5	30	4.5	5	9.5	30	12	6	205.5	244.5
ø12.7	12.7	30	4.5	5	9.5	30	12	6	205.5	244.5
ø12.8	12.8	30	4.5	5	9.5	30	12	6	205.5	244.5
ø12.9	12.9	30	4.5	5	9.5	30	12	6	205.5	244.5
ø13.0	13.0	30	4.5	5	10	30	12	6	205.5	244.5
ø14.5	14.5	30	6	5	11	30	12	7	205.5	244.5
ø14.7	14.7	30	6	5	11	30	12	7	205.5	244.5
ø14.8	14.8	30	6	5	11	30	12	7	205.5	244.5
ø14.9	14.9	30	6	6	11	30	12	7	205.5	244.5
ø15.0	15.0	30	6	6	11.5	30	12	7	205.5	244.5
ø15.5	15.5	30	6	6	11.5	30	12	7	205.5	244.5
ø15.7	15.7	30	6	6	11.5	30	12	7	205.5	244.5
ø15.8	15.8	30	6	6	11.5	30	12	7	205.5	244.5
ø15.9	15.9	30	6	6	11.5	30	12	7	205.5	244.5
ø16.0	16.0	30	6	6.5	12	30	12	7	205.5	244.5
ø17.5	17.5	30	6	7	13	35	12	8	210.5	249.5
ø17.7	17.7	30	6	7	13	35	12	8	210.5	249.5
ø17.8	17.8	30	6	7	13	35	12	8	210.5	249.5

Code Locating pin ø (mm)	Common dimensions (mm)									
	A	B	C	D	E	F	G	H	J	K
ø17.9	17.9	30	6	7	13	35	12	8	210.5	249.5
ø18.0	18.0	30	6	7	13.5	35	12	8	210.5	249.5
ø19.5	19.5	30	6	8	14	35	12	10	210.5	249.5
ø19.7	19.7	30	6	8	14	35	12	10	210.5	249.5
ø19.8	19.8	30	6	8	14	35	12	10	210.5	249.5
ø19.9	19.9	30	6	8	14	35	12	10	210.5	249.5
ø20.0	20.0	30	6	8	14.5	35	12	10	210.5	249.5
ø24.5	24.5	40	6	9	16.5	35	11.5	12	210.5	249.5
ø24.7	24.7	40	6	9	16.5	35	11.5	12	210.5	249.5
ø24.8	24.8	40	6	9	16.5	35	11.5	12	210.5	249.5
ø24.9	24.9	40	6	9	16.5	35	11.5	12	210.5	249.5
ø25.0	25.0	40	6	10	17	35	11.5	12	210.5	249.5
ø29.5	29.5	40	6	12	19.5	35	11.5	14	210.5	249.5
ø29.7	29.7	40	6	12	19.5	35	11.5	14	210.5	249.5
ø29.8	29.8	40	6	12	19.5	35	11.5	14	210.5	249.5
ø29.9	29.9	40	6	12	19.5	35	11.5	14	210.5	249.5
ø30.0	30.0	40	6	12.5	20	35	11.5	15	210.5	249.5

Dimensions (PCC-C1, PCC-QC1)

● PCC-C1

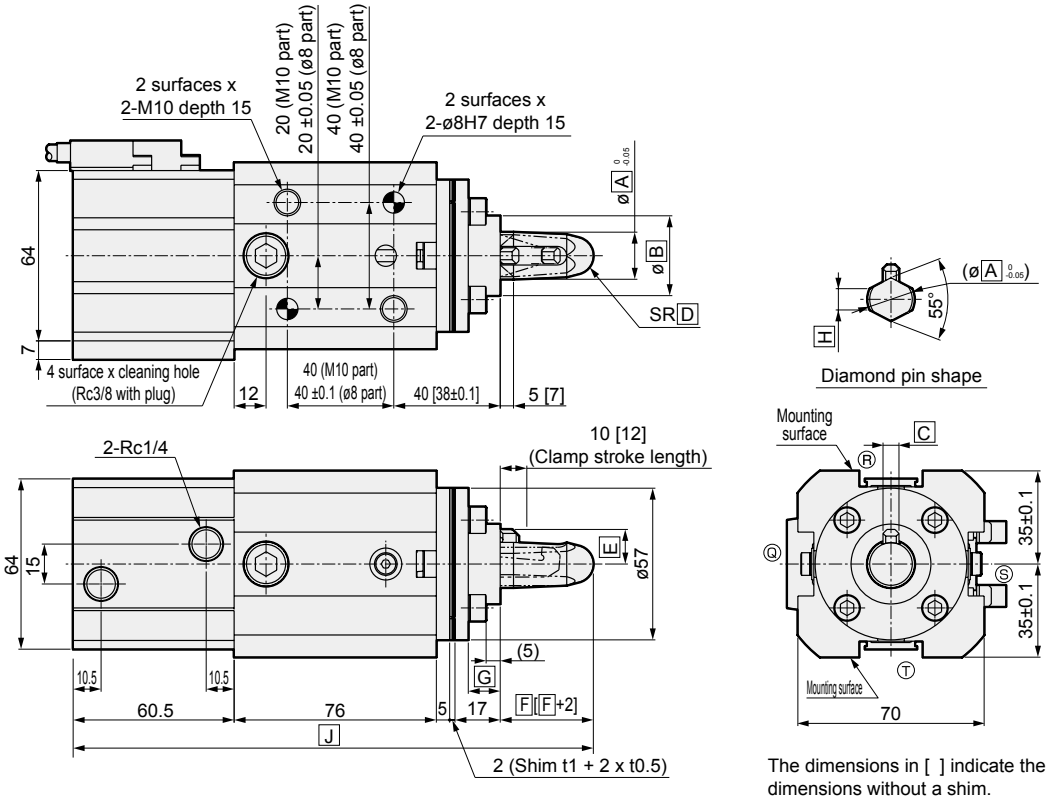

The dimensions in [ ] indicate the dimensions without a shim.

● PCC-QC1 (position locking)

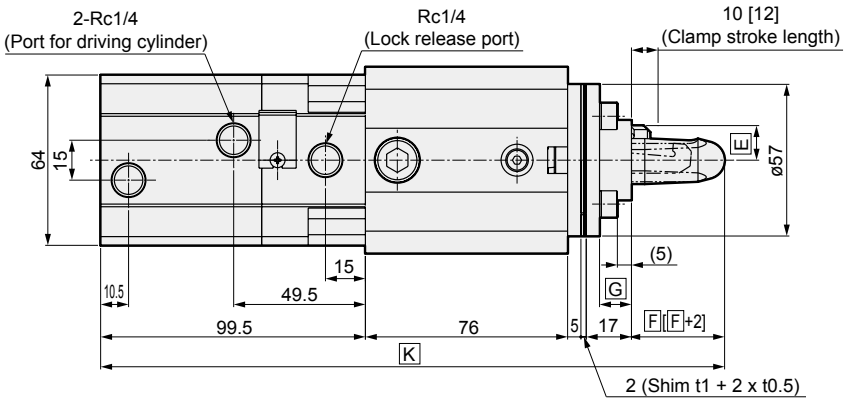

Code Locating pin ø (mm)	Common dimensions (mm)									
	A	B	C	D	E	F	G	H	J	K
ø12.5	12.5	30	4.5	5	9.5	30	12	6	190.5	229.5
ø12.7	12.7	30	4.5	5	9.5	30	12	6	190.5	229.5
ø12.8	12.8	30	4.5	5	9.5	30	12	6	190.5	229.5
ø12.9	12.9	30	4.5	5	9.5	30	12	6	190.5	229.5
ø13.0	13.0	30	4.5	5	10	30	12	6	190.5	229.5
ø14.5	14.5	30	6	5	11	30	12	7	190.5	229.5
ø14.7	14.7	30	6	5	11	30	12	7	190.5	229.5
ø14.8	14.8	30	6	5	11	30	12	7	190.5	229.5
ø14.9	14.9	30	6	5	11	30	12	7	190.5	229.5
ø15.0	15.0	30	6	6	11.5	30	12	7	190.5	229.5
ø15.5	15.5	30	6	6	11.5	30	12	7	190.5	229.5
ø15.7	15.7	30	6	6	11.5	30	12	7	190.5	229.5
ø15.8	15.8	30	6	6	11.5	30	12	7	190.5	229.5
ø15.9	15.9	30	6	6	11.5	30	12	7	190.5	229.5
ø16.0	16.0	30	6	6.5	12	30	12	7	190.5	229.5
ø17.5	17.5	30	6	7	13	35	12	8	195.5	234.5
ø17.7	17.7	30	6	7	13	35	12	8	195.5	234.5
ø17.8	17.8	30	6	7	13	35	12	8	195.5	234.5

Code Locating pin ø (mm)	Common dimensions (mm)									
	A	B	C	D	E	F	G	H	J	K
ø17.9	17.9	30	6	7	13	35	12	8	195.5	234.5
ø18.0	18.0	30	6	7	13.5	35	12	8	195.5	234.5
ø19.5	19.5	30	6	8	14	35	12	10	195.5	234.5
ø19.7	19.7	30	6	8	14	35	12	10	195.5	234.5
ø19.8	19.8	30	6	8	14	35	12	10	195.5	234.5
ø19.9	19.9	30	6	8	14	35	12	10	195.5	234.5
ø20.0	20.0	30	6	8	14.5	35	12	10	195.5	234.5
ø24.5	24.5	40	6	9	16.5	35	11.5	12	195.5	234.5
ø24.7	24.7	40	6	9	16.5	35	11.5	12	195.5	234.5
ø24.8	24.8	40	6	9	16.5	35	11.5	12	195.5	234.5
ø24.9	24.9	40	6	9	16.5	35	11.5	12	195.5	234.5
ø25.0	25.0	40	6	10	17	35	11.5	12	195.5	234.5
ø29.5	29.5	40	6	12	19.5	35	11.5	14	195.5	234.5
ø29.7	29.7	40	6	12	19.5	35	11.5	14	195.5	234.5
ø29.8	29.8	40	6	12	19.5	35	11.5	14	195.5	234.5
ø29.9	29.9	40	6	12	19.5	35	11.5	14	195.5	234.5
ø30.0	30.0	40	6	12.5	20	35	11.5	15	195.5	234.5

LCM
LCR
LCG
LCW
LCX
STM
STG
STS/STL
STR2
UCA2
ULK*
JSK/M2
JSG
JSC3/JSC4
USSD
UFCD
USC
UB
JSB3
LMB
LML
HCM
HCA
LBC
CAC4
UCAC2
CAC-N
UCAC-N
RCS2
RCC2
PCC
SHC
MCP
GLC
MFC
BBS
RRC
GRC
RV3*
NHS
HRL
LN
Hand
Chuk
MecHnd/Chuk
ShkAbs
FJ
FK
SpdContr
Ending

Dimensions (PCC-C2, PCC-QC2)

● PCC-C2

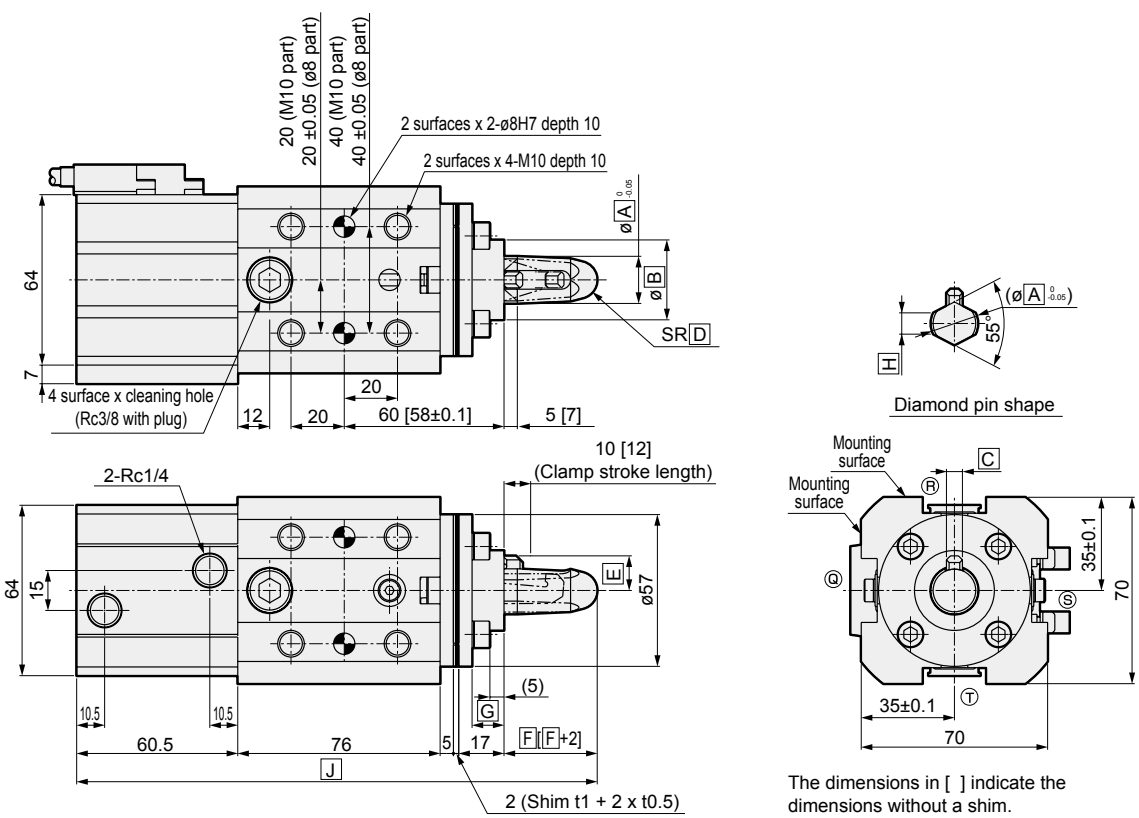

The dimensions in [ ] indicate the dimensions without a shim.

● PCC-QC2

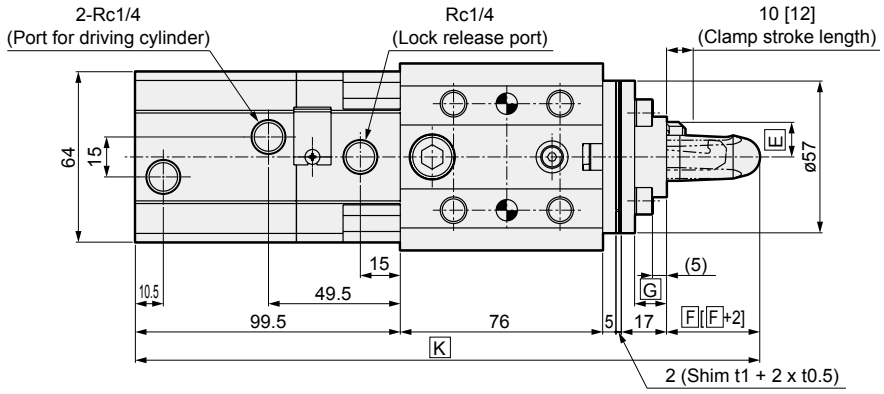

Code Locating pin ø (mm)	Common dimensions (mm)										Code Locating pin ø (mm)	Common dimensions (mm)									
	A	B	C	D	E	F	G	H	J	K		A	B	C	D	E	F	G	H	J	K
ø12.5	12.5	30	4.5	5	9.5	30	12	6	190.5	229.5	ø17.9	17.9	30	6	7	13	35	12	8	195.5	234.5
ø12.7	12.7	30	4.5	5	9.5	30	12	6	190.5	229.5	ø18.0	18.0	30	6	7	13.5	35	12	8	195.5	234.5
ø12.8	12.8	30	4.5	5	9.5	30	12	6	190.5	229.5	ø19.5	19.5	30	6	8	14	35	12	10	195.5	234.5
ø12.9	12.9	30	4.5	5	9.5	30	12	6	190.5	229.5	ø19.7	19.7	30	6	8	14	35	12	10	195.5	234.5
ø13.0	13.0	30	4.5	5	10	30	12	6	190.5	229.5	ø19.8	19.8	30	6	8	14	35	12	10	195.5	234.5
ø14.5	14.5	30	6	5	11	30	12	7	190.5	229.5	ø19.9	19.9	30	6	8	14	35	12	10	195.5	234.5
ø14.7	14.7	30	6	5	11	30	12	7	190.5	229.5	ø20.0	20.0	30	6	8	14.5	35	12	10	195.5	234.5
ø14.8	14.8	30	6	5	11	30	12	7	190.5	229.5	ø24.5	24.5	40	6	9	16.5	35	11.5	12	195.5	234.5
ø14.9	14.9	30	6	5	11	30	12	7	190.5	229.5	ø24.7	24.7	40	6	9	16.5	35	11.5	12	195.5	234.5
ø15.0	15.0	30	6	6	11.5	30	12	7	190.5	229.5	ø24.8	24.8	40	6	9	16.5	35	11.5	12	195.5	234.5
ø15.5	15.5	30	6	6	11.5	30	12	7	190.5	229.5	ø24.9	24.9	40	6	9	16.5	35	11.5	12	195.5	234.5
ø15.7	15.7	30	6	6	11.5	30	12	7	190.5	229.5	ø25.0	25.0	40	6	10	17	35	11.5	12	195.5	234.5
ø15.8	15.8	30	6	6	11.5	30	12	7	190.5	229.5	ø29.5	29.5	40	6	12	19.5	35	11.5	14	195.5	234.5
ø15.9	15.9	30	6	6	11.5	30	12	7	190.5	229.5	ø29.7	29.7	40	6	12	19.5	35	11.5	14	195.5	234.5
ø16.0	16.0	30	6	6.5	12	30	12	7	190.5	229.5	ø29.8	29.8	40	6	12	19.5	35	11.5	14	195.5	234.5
ø17.5	17.5	30	6	7	13	35	12	8	195.5	234.5	ø29.9	29.9	40	6	12	19.5	35	11.5	14	195.5	234.5
ø17.7	17.7	30	6	7	13	35	12	8	195.5	234.5	ø30.0	30.0	40	6	12.5	20	35	11.5	15	195.5	234.5
ø17.8	17.8	30	6	7	13	35	12	8	195.5	234.5											

Dimensions (PCC-D1)

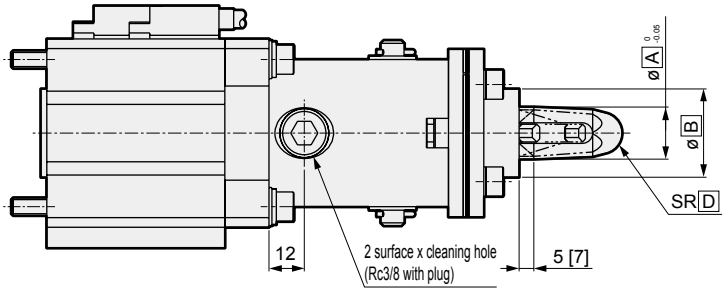

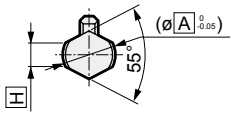

Diamond pin shape

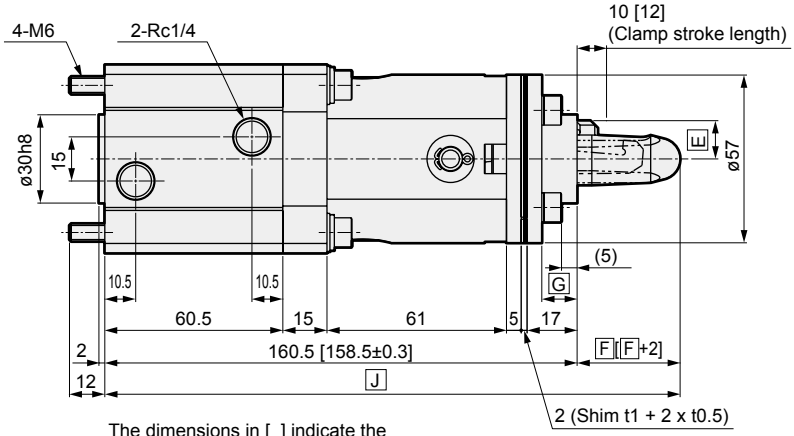

The dimensions in [ ] indicate the dimensions without a shim.

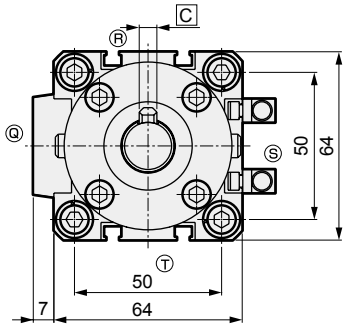

Code Locating pin ø (mm)	Common dimensions (mm)								
	A	B	C	D	E	F	G	H	J
ø12.5	12.5	30	4.5	5	9.5	30	12	6	190.5
ø12.7	12.7	30	4.5	5	9.5	30	12	6	190.5
ø12.8	12.8	30	4.5	5	9.5	30	12	6	190.5
ø12.9	12.9	30	4.5	5	9.5	30	12	6	190.5
ø13.0	13.0	30	4.5	5	10	30	12	6	190.5
ø14.5	14.5	30	6	5	11	30	12	7	190.5
ø14.7	14.7	30	6	5	11	30	12	7	190.5
ø14.8	14.8	30	6	5	11	30	12	7	190.5
ø14.9	14.9	30	6	5	11	30	12	7	190.5
ø15.0	15.0	30	6	6	11.5	30	12	7	190.5
ø15.5	15.5	30	6	6	11.5	30	12	7	190.5
ø15.7	15.7	30	6	6	11.5	30	12	7	190.5
ø15.8	15.8	30	6	6	11.5	30	12	7	190.5
ø15.9	15.9	30	6	6	11.5	30	12	7	190.5
ø16.0	16.0	30	6	6.5	12	30	12	7	190.5
ø17.5	17.5	30	6	7	13	35	12	8	195.5
ø17.7	17.7	30	6	7	13	35	12	8	195.5
ø17.8	17.8	30	6	7	13	35	12	8	195.5

Code Locating pin ø (mm)	Common dimensions (mm)								
	A	B	C	D	E	F	G	H	J
ø17.9	17.9	30	6	7	13	35	12	8	195.5
ø18.0	18.0	30	6	7	13.5	35	12	8	195.5
ø19.5	19.5	30	6	8	14	35	12	10	195.5
ø19.7	19.7	30	6	8	14	35	12	10	195.5
ø19.8	19.8	30	6	8	14	35	12	10	195.5
ø19.9	19.9	30	6	8	14	35	12	10	195.5
ø20.0	20.0	30	6	8	14.5	35	12	10	195.5
ø24.5	24.5	40	6	9	16.5	35	11.5	12	195.5
ø24.7	24.7	40	6	9	16.5	35	11.5	12	195.5
ø24.8	24.8	40	6	9	16.5	35	11.5	12	195.5
ø24.9	24.9	40	6	9	16.5	35	11.5	12	195.5
ø25.0	25.0	40	6	10	17	35	11.5	12	195.5
ø29.5	29.5	40	6	12	19.5	35	11.5	14	195.5
ø29.7	29.7	40	6	12	19.5	35	11.5	14	195.5
ø29.8	29.8	40	6	12	19.5	35	11.5	14	195.5
ø29.9	29.9	40	6	12	19.5	35	11.5	14	195.5
ø30.0	30.0	40	6	12.5	20	35	11.5	15	195.5

LCM
LCR
LCG
LCW
LCX
STM
STG
STS/STL
STR2
UCA2
ULK*
JSK/M2
JSG
JSC3/JSC4
USSD
UFCD
USC
UB
JSB3
LMB
LML
HCM
HCA
LBC
CAC4
UCAC2
CAC-N
UCAC-N
RCS2
RCC2
PCC
SHC
MCP
GLC
MFC
BBS
RRC
GRC
RV3*
NHS
HRL
LN
Hand
Chuk
MecHnd/Chuk
ShkAbs
FJ
FK
SpdContr
Ending

PCC-A1 custom-made specification sheet (copy for use)

1. Basic model No.

PCC-A15 □ □□ □ - □□□ □ - □ □□□ ...Basic

PCC-QA15 □ □□ □ - □□□ □ - □ □□□ ...Position locking

2. Specified dimension points (fill in the blanks for required points)

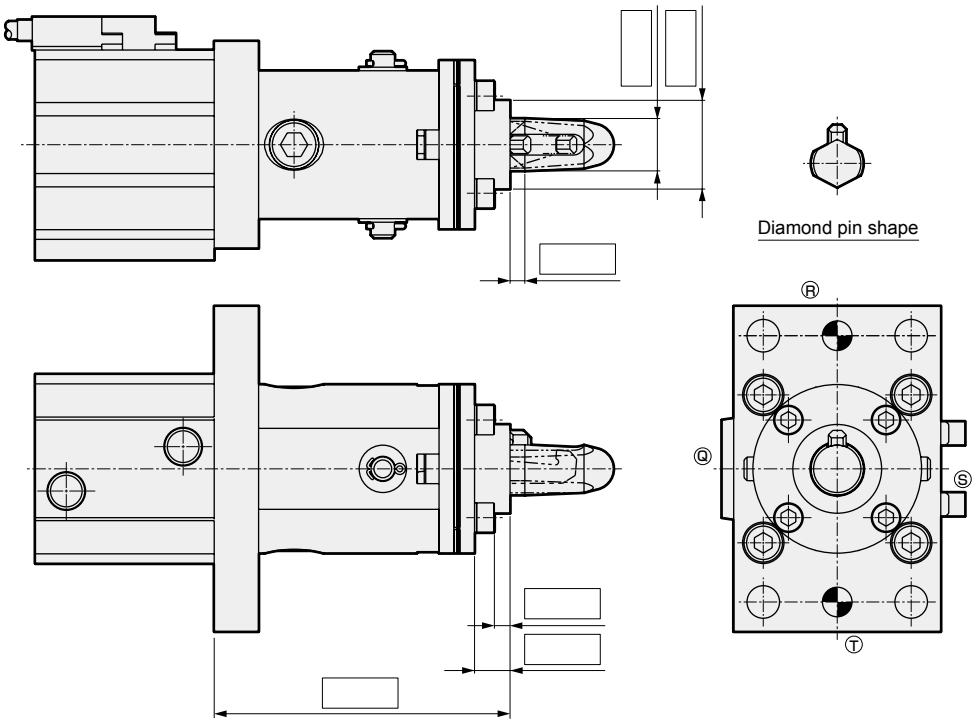

3. Other remarks

PCC-B1 custom-made specification sheet (copy for use)

1. Basic model No.

PCC-B15 ☐ ☐ ☐ - ☐ ☐ - ☐ ☐ **...Basic**

PCC-QB15 ☐ ☐ ☐ - ☐ ☐ - ☐ ☐ **...Position locking**

2. Specified dimension points (fill in the blanks for required points)

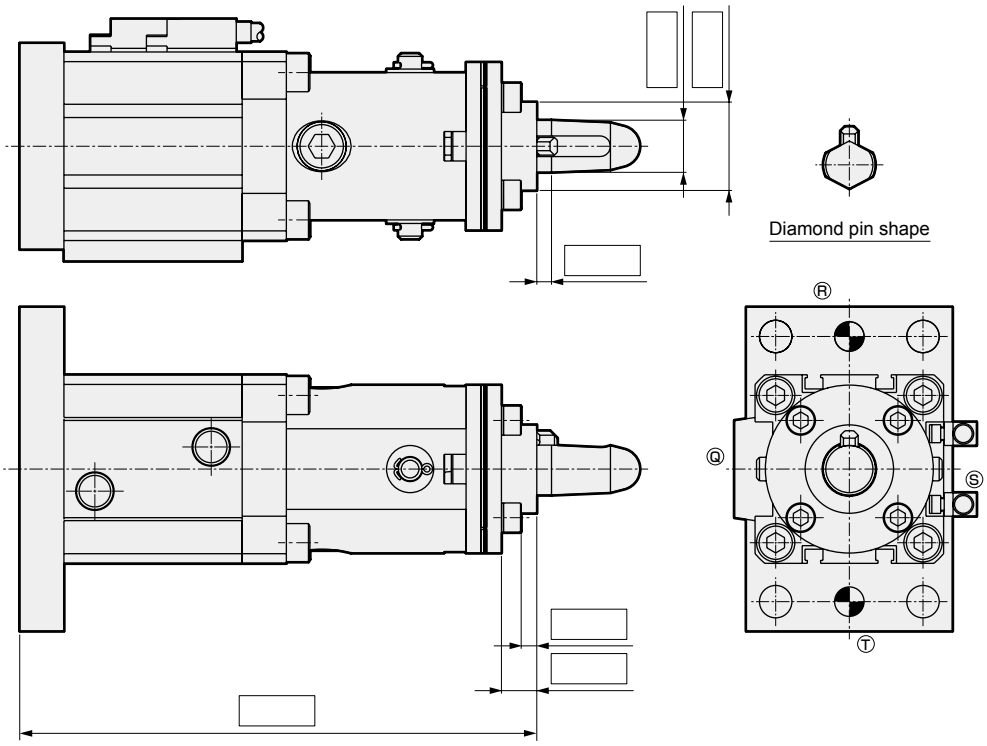

3. Other remarks

LCM
LCR
LCG
LCW
LCX
STM
STG
STS/STL
STR2
UCA2
ULK*
JSK/M2
JSG
JSC3/JSC4
USSD
UFCD
USC
UB
JSB3
LMB
LML
HCM
HCA
LBC
CAC4
UCAC2
CAC-N
UCAC-N
RCS2
RCC2
PCC
SHC
MCP
GLC
MFC
BBS
RRC
GRC
RV3*
NHS
HRL
LN
Hand
Chuk
MecHnd/Chuk
ShkAbs
FJ
FK
SpdContr
Ending

PCC-C1 custom-made specification sheet (copy for use)

1. Basic model No.

PCC-C15 □ □□ □ - □□□ □ - □ □□□ ...Basic

PCC-QC15 □ □□ □ - □□□ □ - □ □□□ ...Position locking

2. Specified dimension points (fill in the blanks for required points)

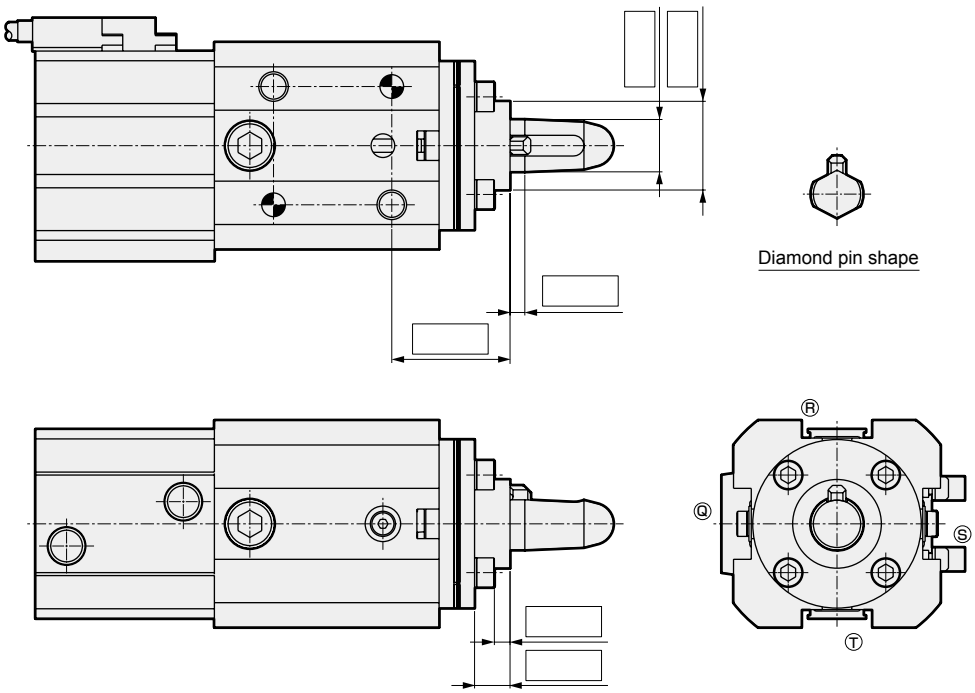

3. Other remarks

PCC-C2 custom-made specification sheet (copy for use)

1. Basic model No.

PCC-C25 ☐ ☐ ☐ - ☐ ☐ - ☐ ☐ **...Basic**

PCC-QC25 ☐ ☐ ☐ - ☐ ☐ - ☐ ☐ **...Position locking**

2. Specified dimension points (fill in the blanks for required points)

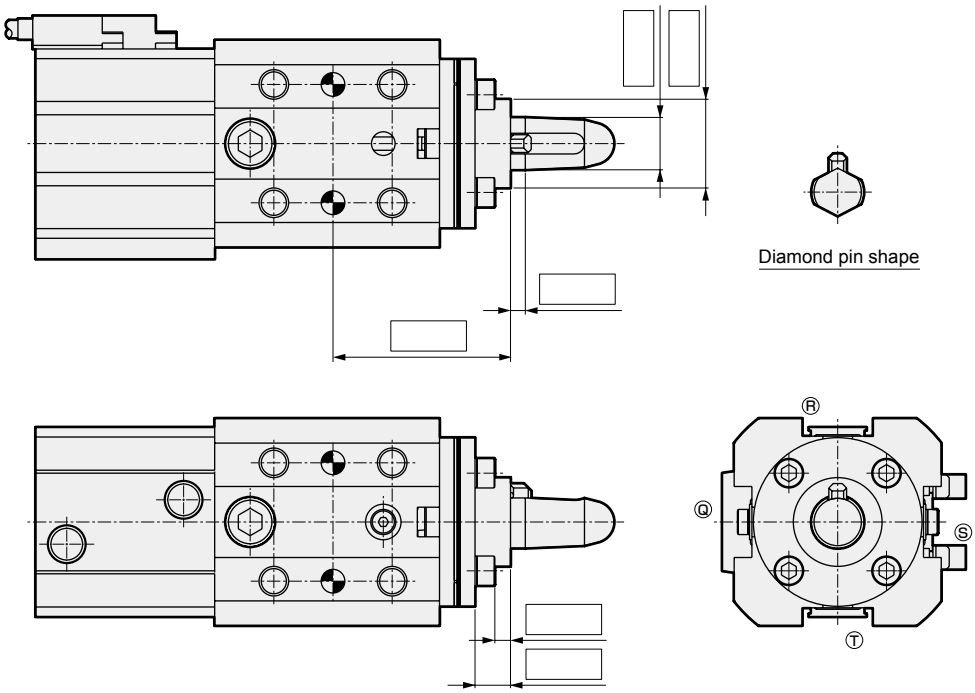

3. Other remarks

LCM
LCR
LCG
LCW
LCX
STM
STG
STS/STL
STR2
UCA2
ULK*
JSK/M2
JSG
JSC3/JSC4
USSD
UFCD
USC
UB
JSB3
LMB
LML
HCM
HCA
LBC
CAC4
UCAC2
CAC-N
UCAC-N
RCS2
RCC2
PCC
SHC
MCP
GLC
MFC
BBS
RRC
GRC
RV3*
NHS
HRL
LN
Hand
Chuk
MecHnd/Chuk
ShkAbs
FJ
FK
SpdContr
Ending

PCC-D1 custom-made specification sheet (copy for use)

1. Basic model No.

PCC-D15 □ □ □ - □ □ - □ □ ...Basic

2. Specified dimension points (fill in the blanks for required points)

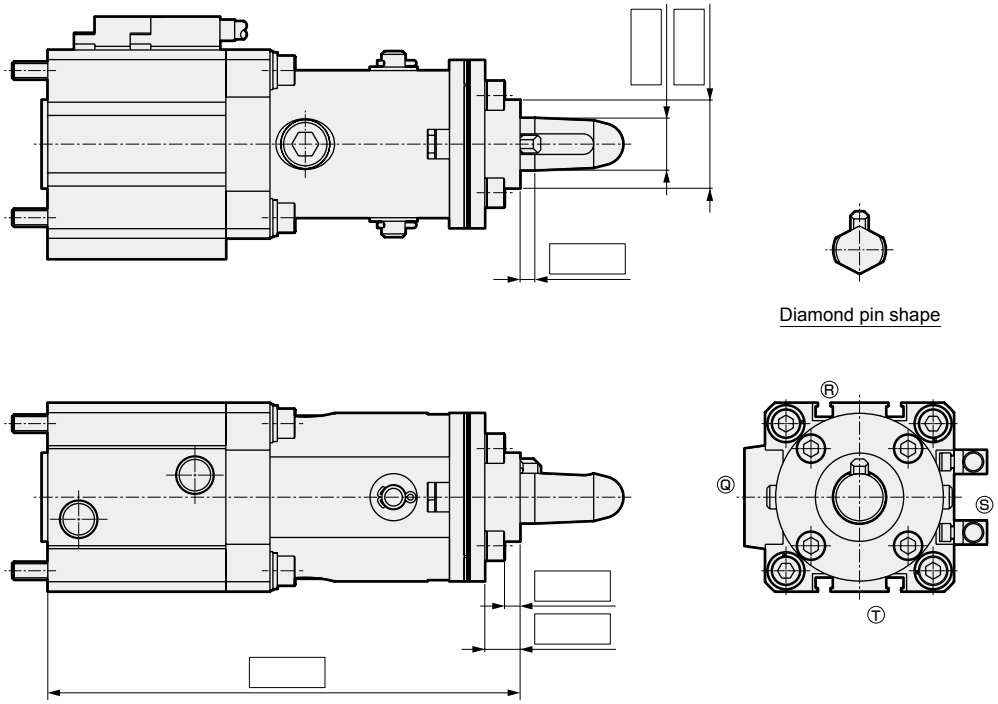

3. Other remarks

Safety precautions

■ Design/selection

⚠ WARNING

- This cylinder has been designed to simultaneously perform positioning and clamping of the workpiece. Do not use it for other applications, as this may cause accidents, damage to the cylinder, etc.
- If fingers may be caught in the clamp lever, install a protective cover, etc.
- When the circuit pressure drops due to power outage or problems in the air source, the clamping force drops, which may cause the workpiece to fall out depending on the mounting orientation of the product. Provide a position locking cylinder or safety measures on the device so that personnel are not injured or machines damaged.
- When mounting this cylinder to a transport robot or the like, it may not be possible to maintain clamping force due to the weight of the workpiece to be transported, inertial force during transportation, etc. Provide scattering protection to the workpiece as required upon considering the weight and inertial force of the workpiece to be transported.

PCC-Q (position locking) only

- Cylinder with position locking mechanism (for holding clamping position).
  Emergency stops (while in operation) can significantly decrease the service life.
- If back pressure is applied to the locking mechanism, the lock may be released. Use a discrete valve, or use an individual exhaust manifold.
- When unlocking, make sure to supply pressure to the clamp (rod) side port, and check that load is not applied to the lock mechanism before unlocking.
- Due to the structure, the clamp lever moves by about 1 mm when the lock is applied.

⚠ CAUTION

- Set the clamping of the workpiece within the clamp stroke range.
- When using this product in the welding process, be sure to ground to avoid current leading to the product.

PCC-Q (position locking) only

- Arrange the air piping of this cylinder (position locking) as shown in the figure on the right.
  Arranging the pipes differently from the figure at right, such as piping the position locking part as a single unit, may cause problems such as delayed response.
  · Be sure to branch the piping of this cylinder after the valve into the position locking part (main piping) and cylinder part (branch piping) as shown in the figure on the right.
  · Be sure to design the piping so that the lock is released before the cylinder starts operating. Failure to do so may prevent unlocking or cause the piston rod to jump out.

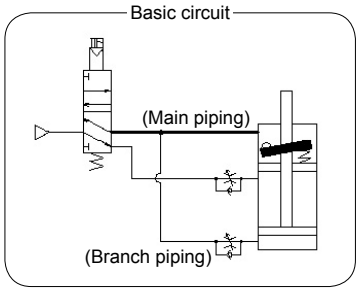

■ Use/maintenance

⚠ WARNING

PCC-Q (position locking) only

- Do not lubricate the lock, as this may cause the holding force to decrease.
- Do not disassemble the lock, as doing so may be dangerous.
- Always use the product with the dust cover on, except for when performing manual release, in order to prevent failure or malfunction.

⚠ CAUTION

- Remove spatter from the product upon removing the plug (R3/8) of the product side cleaning hole. During work, protect the piston rod sliding surface from scratches and dents.
- Locating pin and clamp lever are repair parts. Using an abraded locating pin or clamp lever may cause the position of the workpiece to be shifted while clamping or prevent proper clamping.

PCC-Q (position locking) only

- When locking the first time after leaving the lock released for a long time, a delayed response may occur in the lock. Do not leave the lock pressurized, and operate the lock at each cylinder operation.
- If no air pressure is supplied in vertical downward mounting, etc., holding force may not be sufficient when the lock is manually released. This may cause the clamp to release and the workpiece to fall from its own weight.

MEMO

SHC

High power cylinder

ø40/ø50/ø63/ø80/ø100

Special

Overview

High power cylinder is an ultra energy saving cylinder developed for applications where high power is required at the stroke end. Compared to conventional types, this cylinder is far superior in terms of operation costs, space and environmental friendliness, making it well suited to the next generation factory lines and equipment.

Features

Ultra energy saving realized

Air consumption volume is approximately 1/2 to 1/8 (compared to conventional).

The conventional ø100 is reduced to ø50.

Power equivalent to conventional cylinders is realized with a cylinder bore size of less than half. (Quad force)

Drastically reduced footprint

Conventionally, the same amount of power is obtained with a cylinder bore size one to two sizes larger.
This offers a superior advantage when installing in a narrow space.

CONTENTS

Product introduction and application examples	1138
Series variation	1142
● Double acting/double force (SHC)	1144
● Double acting/quad force (SHC-K)	1154
SHC Series common option/accessory dimensions	1162
Technical data	1165
⚠ Safety precautions	1172

LCM
LCR
LCG
LCW
LCX
STM
STG
STS/STL
STR2
UCA2
ULK*
JSK/M2
JSG
JSC3/JSC4
USSD
UFCD
USC
UB
JSB3
LMB
LML
HCM
HCA
LBC
CAC4
UCAC2
CAC-N
UCAC-N
RCS2
RCC2
PCC
SHC
MCP
GLC
MFC
BBS
RRC
GRC
RV3*
NHS
HRL
LN
Hand
Chuk
MecHnd/Chuk
ShkAbs
FJ
FK
SpdContr
Ending

Cylinders are changing.

High power cylinders that promise higher profits at production sites.

This high power cylinder is an ultra energy saving cylinder developed for applications where high power is required at the stroke end. Compared to conventional types, this cylinder is far superior in terms of operation costs, space and environmental friendliness, making it well suited for the next generation factory lines and equipment.

■ Ultra energy saving realized

Air consumption volume is approximately 1/2 to 1/8 (compared to conventional).

■ The conventional ø100 is reduced to ø50.

Power equivalent to conventional cylinders is realized with a cylinder bore size of less than half. (Quad force)

■ Drastically reduced footprint

The same amount of power is conventionally obtained with a cylinder bore size one to two sizes larger. This offers a superior advantage when installing in a narrow space.

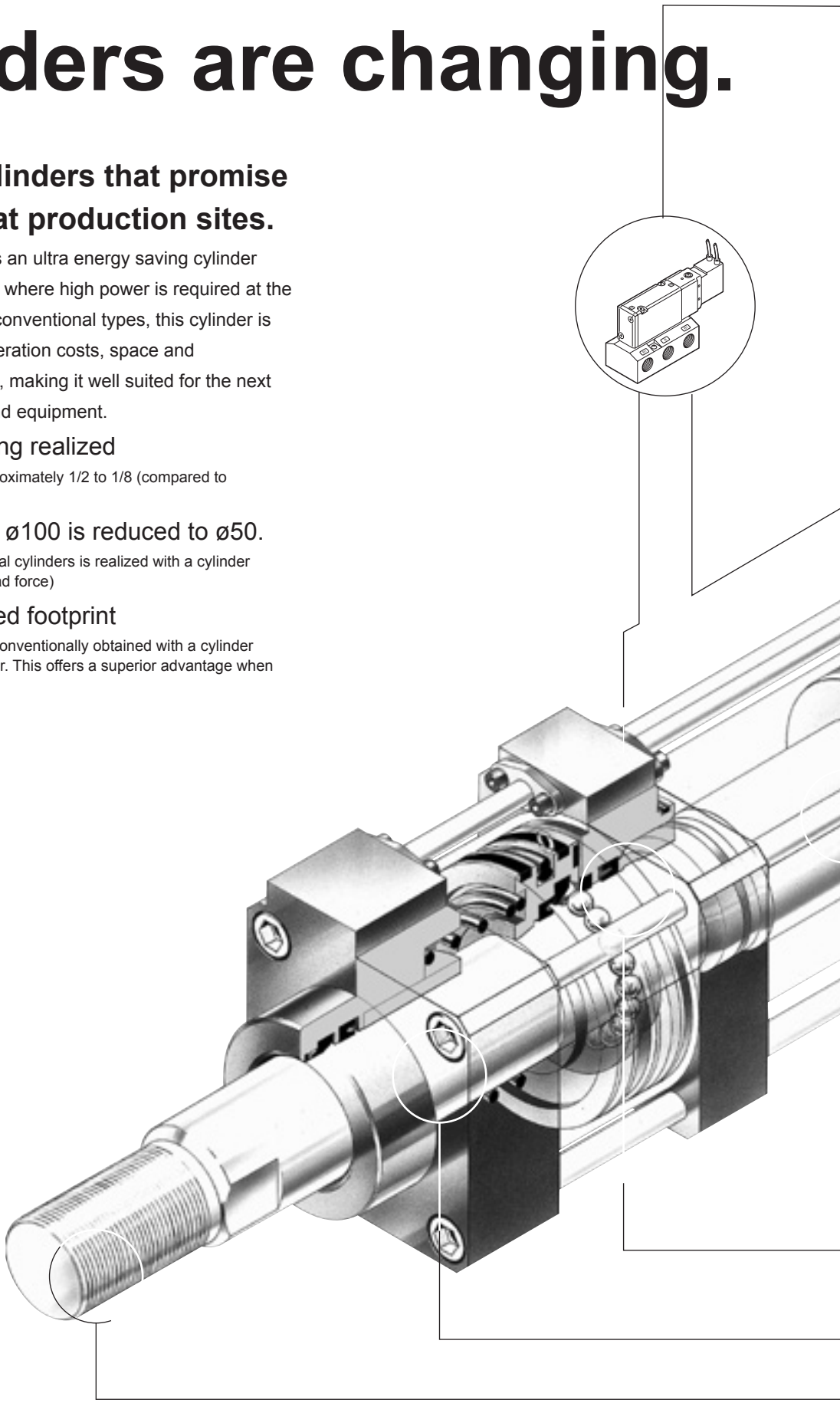

● Piping is the same as conventional

The piping is the same as the conventional cylinder driven by a 4-way valve. Direct replacement of the current cylinder is possible.
For general use, the piping is the same as the conventional cylinder as the air is supplied to the booster cylinder by pass-pipe.

● Air consumption is significantly reduced

As most of the cylinder stroke has a small-bore cylinder mechanism with low thrust, air consumption can be greatly reduced.

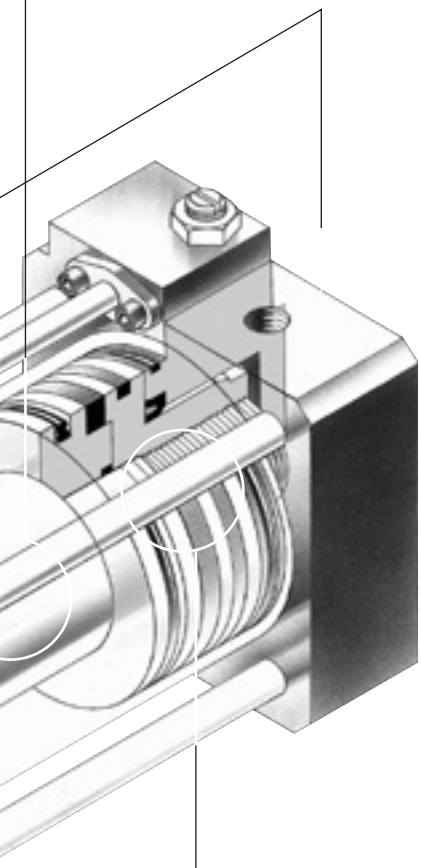

● Easy switch mounting

Position detecting switch can be easily attached.
(Option)

● Saves space significantly

Compared to conventional products, the double force cylinder diameter is reduced to 60% of the original and the quad force volume is reduced to 25%, realizing dramatic space savings.

● Wide range of mounting

Extensive mounting types are available, such as foot and flange.

● Available in ø40 to ø100 to cover the maximum end power of ø200 or equivalent

Double and quad force are available

The stroke end has twice as much thrust as the conventional cylinder due to the booster mechanism. For example, the ø63 double is comparable to the conventional ø100 unit and the ø63 quad is comparable to the conventional ø125.
(After the booster retreats, the thrust will be about 70% of the theoretical thrust.)

● Operational explanation

● At PUSH

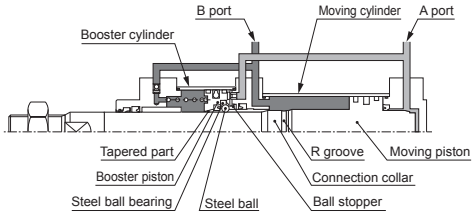

1) The piston rod moves the same way as the normal cylinder, with air supplied from port A and exhausted from port B.

● When linked

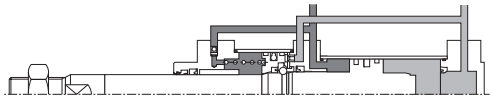

2) When the piston rod moves, the linking collar enters the booster piston. When it reaches the booster piston taper, the booster piston moves, causing the steel ball to fit into the R groove due to the elasticity of the steel ball bearing. This causes the booster piston and connecting collar to connect and form a booster cylinder.

● When boosting

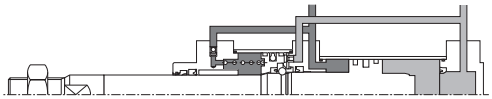

3) By connecting, the united pressure receiving area of the moving piston and booster piston transmits the thrust to the piston rod.

● During PULL Booster backward

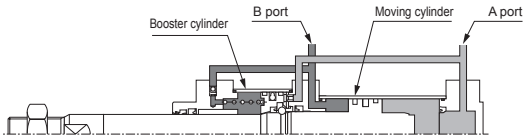

4) When the piston rod is retracted by the air supplied from port A and exhausted from B port, the booster cylinder transmits thrust in the united pressure receiving area of the moving piston and booster piston.

● When uncoupled

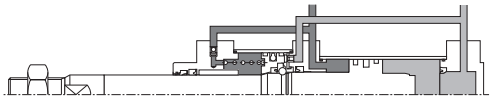

5) Using the ball stopper, push out the steel ball from R groove in the direction of the steel ball bearing before the booster piston is fully retracted to release the connection and retract the piston rod to the stroke end.

LCM
LCR
LCG
LCW
LCX
STM
STG
STS/STL
STR2
UCA2
ULK*
JSK/M2
JSG
JSC3/JSC4
USSD
UFCD
USC
UB
JSB3
LMB
LML
HCM
HCA
LBC
CAC4
UCAC2
CAC-N
UCAC-N
RCS2
RCC2
PCC
SHC
MCP
GLC
MFC
BBS
RRC
GRC
RV3*
NHS
HRL
LN
Hand
Chuk
MecHnd/Chuk
ShkAbs
FJ
FK
SpdContr
Ending

LCM
LCR
LCG
LCW
LCX
STM
STG
STS/STL
STR2
UCA2
ULK*
JSK/M2
JSG
JSC3/JSC4
USSD
UFCD
USC
UB
JSB3
LMB
LML
HCM
HCA
LBC
CAC4
UCAC2
CAC-N
UCAC-N
RCS2
RCC2
PCC
SHC
MCP
GLC
MFC
BBS
RRC
GRC
RV3*
NHS
HRL
LN
Hand
Chuk
MecHnd/Chuk
ShkAbs
FJ
FK
SpdContr
Ending

The difference in cost becomes clearer the more you use it.

DATA

Various comparison data with the conventional cylinder

	● Conventional	SHC ● Double force	SHC-K ● Quad force
	ø100 x 300 stroke Theoretical thrust: 3927 N [0.5 MPa]	ø63 x 300 stroke Theoretical thrust: 3139 N [0.5 MPa]	ø50 x 300 stroke Theoretical thrust: 4507 N [0.5 MPa]
Weight ● Unit kg			
Air consumption (reciprocating 100 million times) ● Converted to atmospheric pressure at 0.5 MPa		Approx. 42% of conventional	Approx. 30% of conventional
Operation costs ● Calculate the cost by the compressed air cost of 8 JPY/m^2		Approx. 42% of conventional	Approx. 30% of conventional
Total cost ● Total cost at 1 million reciprocations		Approx. 57% of conventional	Approx. 44% of conventional

Space

● Unit: mm

● Conventional (ø100 I.D. type)

SHC

● Double force (ø63 I.D. type)

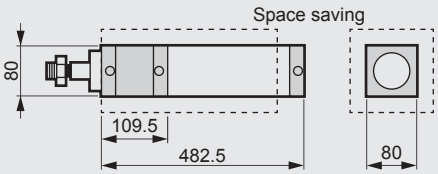

SHC-K

● Quad force (ø50 I.D. type)

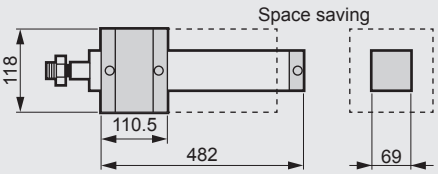

Superior functionality and various applications.

■ Booster single control of high power cylinder

Using booster single control (option code A) realizes a high cycle that conventional cylinders could not achieve.
In most cases, for high frequency cylinder reciprocating operations such as welding gun lines, etc., the tact time is determined by the cylinder's reciprocating time. Even in this case, high-cycle use of the high power cylinder is possible as in the figure below: first reaching out with travel stroke, then stopping for 0.1 sec. and reciprocating several times with booster stroke alone. It can also significantly reduce the stroke reciprocation time, improving the productivity and energy efficiency.

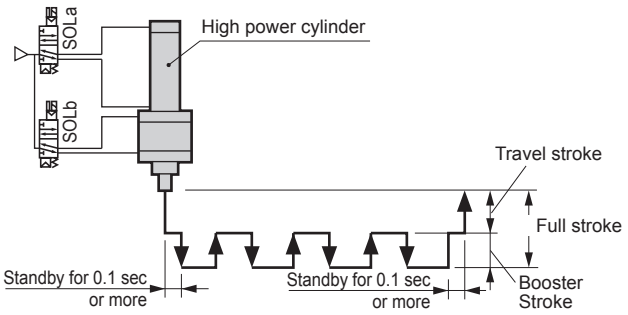

● Welding gun

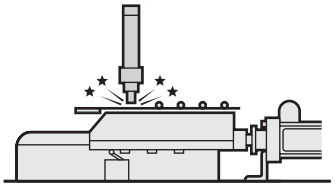

● Engraved mark

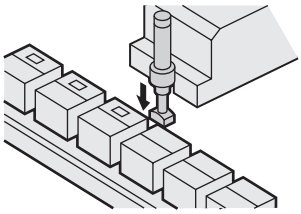

● Clamp 1

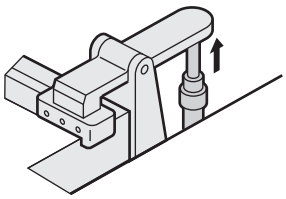

● Press-fit/insert

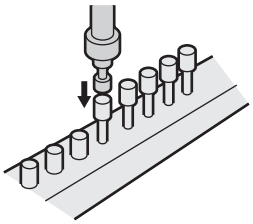

● Clamp 2

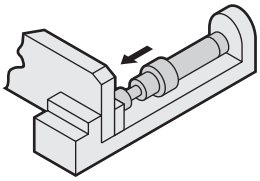

● Crimping

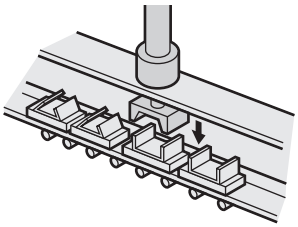

High power cylinder SHC Series

Variation	Model No. JIS symbol	Bore size (mm)	Standard stroke (mm)													Min. stroke (mm)	Max. stroke (mm)	Custom stroke (per mm)	Booster stroke (mm)		Mounting		
			100	150	200	250	300	350	400	500	600	700	800	900	1000				10	20	Basic 00	Axial foot LB	
Double acting/double force	SHC	ø40/ø50	●	●	●	●	●	●	●	●	●	●				40	700	5	●	●	●	●	
		ø63	●	●	●	●	●	●	●	●	●	●	●				800		●	●	●	●	
		ø80	●	●	●	●	●	●	●	●	●	●	●	●			900		●	●	●	●	
		ø100	●	●	●	●	●	●	●	●	●	●	●	●	●		1000		●	●	●	●	
Double acting/quad force	SHC-K	ø40/ø50	●	●	●	●	●	●	●	●	●	●				40	700	5	●	●		●	
		ø63	●	●	●	●	●	●	●	●	●	●	●				800		●	●		●	
		ø80	●	●	●	●	●	●	●	●	●	●	●	●			900		●	●		●	
		ø100	●	●	●	●	●	●	●	●	●	●	●	●	●		1000		●	●		●	

●: Standard ◎: Option ○: Made to order, ■: Not available

Mounting								Cushion		Option											Accessory						Switch	Page
												Piping port position																
	Rod side flange	Head side flange	Eye bracket	Clevis bracket	Intermediate trunnion	Rod side trunnion	Head side trunnion	Without cushion	Head side cushioned	Rod end form male thread	Rod end form flange	Top from rod side	Right from rod side	Bottom from rod side	Left from rod side	Bellows (100°C)	Bellows (250°C)	Metal scraper	Copper and PTFE free	Booster single control port	Rod eye	Rod clevis	Eye bracket (for clevis)	Clevis bracket (for clevis)	Eye bracket (for rod eye)	Clevis bracket (for rod eye/clevis)		
	FA	FB	CA	CB	TC	TA	TB	N	H	Blank	F	Blank	R	S	T	J	L	G1	P6	A	I	Y	B11	B21	B12	B22		
	●	●	●	●	●	●	●	●	●	◎	◎	◎	◎	◎	◎	◎	○	◎	◎	◎	◎	◎	◎	◎	◎	◎	◎	1144
	●	●	●	●	●	●	●	●	●	◎	◎	◎	◎	◎	◎	◎	○	◎	◎	◎	◎	◎	◎	◎	◎	◎		
	●	●	●	●	●	●	●	●	●	◎	◎	◎	◎	◎	◎	◎	○	◎	◎	◎	◎	◎	◎	◎	◎	◎		
	●	●	●	●	●	●	●	●	●	◎	◎	◎	◎	◎	◎	◎	○	◎	◎	◎	◎	◎	◎	◎	◎	◎		
	●					●		●	●	◎	◎	◎	◎	◎	◎	◎	○	◎	◎	◎	◎	◎			◎	◎	◎	1154
	●					●		●	●	◎	◎	◎	◎	◎	◎	◎	○	◎	◎	◎	◎	◎			◎	◎		
	●					●		●	●	◎	◎	◎	◎	◎	◎	◎	○	◎	◎	◎	◎	◎			◎	◎		
	●					●		●	●	◎	◎	◎	◎	◎	◎	◎	○	◎	◎	◎	◎	◎			◎	◎		

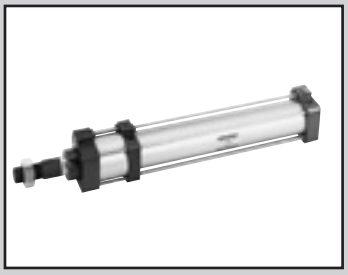

High power cylinder/double acting/double force

SHC Series

● Equivalent bore size: ø40/ø50/ø63/ø80/ø100

JIS symbol

RoHS CAD

Specifications

Item		SHC				
Bore size	mm	ø40	ø50	ø63	ø80	ø100
Actuation		Double acting/projection double force				
Working fluid		Compressed air				
Max. working pressure	MPa	0.9 (≈130 psi, 9 bar)				
Min. working pressure	MPa	0.2 (≈29 psi, 2 bar)	0.15 (≈22 psi, 1.5 bar)			
Proof pressure	MPa	1.35 (≈200 psi, 13.5 bar)				
Ambient temperature	°C	-10 (14°F) to 60 (140°F) (no freezing)				
Port size	Rc	1/8	1/4	1/4	3/8	3/8
Stroke tolerance	mm	$^{+1.3}_{0}$ (to 300), $^{+1.7}_{0}$ (to 1000), $^{+2.1}_{0}$ (1000 to)				
Working piston speed *1	mm/s Cylinder	50 to 500				
	mm/s Booster section	40 to 70 (booster section single control)				
Cushion		Air cushion				
Lubrication		Not required (use turbine oil class 1 ISO VG32 if necessary for lubrication)				
Rod side allowable absorbed energy (J)		12.2	22.9	31.3	47.2	76.2
Head side allowable absorbed energy (J)		5.84	9.99	15.1	25.5	41.0

*1: As the piston speed differs depending on the supply pressure, refer to the technical data on page 1166.

Stroke

Bore size (mm)	Standard stroke (mm)	Max. stroke (mm)	Booster stroke	(mm) Dead zone
ø40	100, 150, 200, 250, 300, 400, 500	700	10, 20	1.9
ø50				1.9
ø63		800		2
ø80		900		2.3
ø100		1000		2.8

Normal use

Dead zone

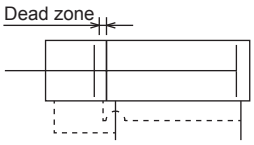

Booster section single operation

Dead zone

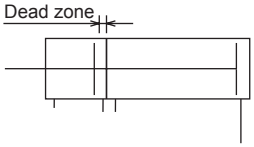

*1: The custom stroke is available in 5 mm increments.
*2: Dead zone (area not generating boosted thrust) stroke, until connection with booster piston completes, is included in the booster stroke.
*3: Min. stroke is 40 mm with or without switch. For types with switch, minimum stroke varies depending on mounting method. Refer to the following table.

Min. stroke with switch

Bore size (mm)	When mounted on the same surface	When mounted on different surfaces
	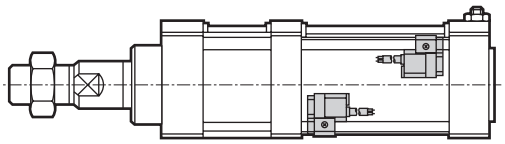	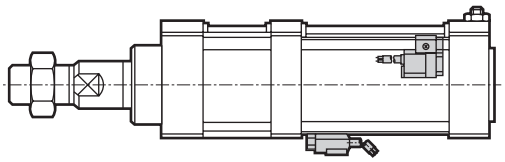
ø40	65	40
ø50		
ø63	40	
ø80		
ø100		

LCM
LCR
LCG
LCW
LCX
STM
STG
STS/STL
STR2
UCA2
ULK*
JSK/M2
JSG
JSC3/JSC4
USSD
UFCD
USC
UB
JSB3
LMB
LML
HCM
HCA
LBC
CAC4
UCAC2
CAC-N
UCAC-N
RCS2
RCC2
PCC
SHC
MCP
GLC
MFC
BBS
RRC
GRC
RV3*
NHS
HRL
LN
Hand
Chuk
MecHnd/Chuk
ShkAbs
FJ
FK
SpdContr
Ending

Switch specifications

● 1-color/2-color LED

Item		Proximity 2-wire			Proximity 3-wire	
		R1	R2	R2Y (2-color LED)	R3	R3Y (2-color LED)
Applications		Programmable controller, relay, compact solenoid valve	Dedicated for programmable controller		For programmable controller, relay, IC circuit, solenoid valve	
Output method		-			NPN output	
Power supply voltage		-			4.5 VDC to 28 VDC	
Load voltage		85 VAC to 265 VAC	10 to 30 VDC		30 VDC or less	
Load current		5 to 100 mA	5 to 30 mA		200 mA or less	100 mA or less
Indicator		LED (Lit when ON)		Red/green LED (Lit when ON)	LED (Lit when ON)	Red/green LED (Lit when ON)
Leakage current		1 mA or less with 100 VAC, 2 mA or less with 200 VAC	1 mA or less	1.2 mA or less	10 μA or less	
Weight g	Grommet	1 m:42 3 m:100 5 m:158		1 m:56 3 m:114 5 m:172	1 m:42 3 m:100 5 m:158	1 m:56 3 m:114 5 m:172
	Terminal box	68		82	68	82

Item		Reed 2-wire								
		R0			R4		R5			R6
Applications		Relay, programmable controller			For high capacity relay, solenoid valve		For programmable controller, relay, IC circuit (without indicator lamp), serial connection			Dedicated for programmable controller (with DC self-hold)
Load voltage		12/24 VDC	110 VAC	220 VAC	110 VAC	220 VAC	12/24 VDC	110 VAC	220 VAC	24 VDC
Load current		5 to 50 mA	7 to 20 mA	7 to 10 mA	20 to 200 mA	10 to 200 mA	50 mA or less	20 mA or less	10 mA or less	5 to 50 mA
Indicator		LED (Lit when ON)			Neon lamp (Lit when OFF)		No indicator lamp			LED (Lit when ON)
Leakage current		0 mA			1 mA or less		0 mA			0.1 mA or less
Weight g	Grommet	1 m:42 3 m:100 5 m:158								
	Terminal box	68								

● Strong magnetic field proof

Item	Reed 2-wire	
	H0	
Applications	For relay, programmable controller	
Load voltage	12/24 VDC	110 VAC
Load current	5 to 50 mA	7 to 20 mA
Indicator	Green LED (Lit when ON)	
Leakage current	10 μA or less	
Weight g	1 m:76 3 m:181 5 m:289	

*1: Refer to Ending Page 1 for detailed switch specifications and dimensions.

Cylinder weight

(Unit: kg)

Bore size (mm)	Product weight when at 0 mm stroke						Switch weight	Mounting bracket weight		Additional weight per 100 mm cylinder stroke	Additional weight per 10 mm booster stroke	Additional weight of F type
	Basic (00)	Axial foot (LB)	Flange (FA/FB)	Eye bracket (CA)	Clevis bracket (CB)	Trunnion (TA/TB/TC)		R type	H type			
ø40	1.84	1.99	2.21	2.19	2.19	2.27	Refer to the weight in the switch specifications.	0.023	0.028	0.43	0.08	0.16
ø50	2.80	3.02	3.23	3.24	3.24	3.37		0.021	0.026	0.45	0.10	0.28
ø63	4.02	4.35	5.02	4.57	4.62	4.92		0.019	0.024	0.60	0.13	0.30
ø80	6.78	7.40	8.48	8.32	8.33	8.18		0.025	0.029	0.79	0.19	0.50
ø100	9.85	9.93	12.35	12.00	11.96	12.45		0.023	0.028	1.23	0.40	0.49

Formula for product weight
(Example) SHC-LB-40H-200-20-R0-D-F

- ● Product weight at 0 mm stroke.....1.99 kg
- ● Additional weight per 200 mm stroke .....0.43x $\frac{200}{100}$ =0.86 kg
- ● Additional weight per 20 mm booster stroke .....0.08x $\frac{20}{10}$ =0.16 kg
- ● Additional weight of F type .....0.16 kg
- ● Weight of two RO switches .....0.042x2=0.084 kg
- ● Weight of 2 mounting brackets.....0.023x2=0.046 kg
- ● Product weight.....1.99+0.86+0.16+0.16+0.084+0.046=3.300 kg

LCM
LCR
LCG
LCW
LCX
STM
STG
STS/STL
STR2
UCA2
ULK*
JSK/M2
JSG
JSC3/JSC4
USSD
UFCD
USC
UB
JSB3
LMB
LML
HCM
HCA
LBC
CAC4
UCAC2
CAC-N
UCAC-N
RCS2
RCC2
PCC
SHC
MCP
GLC
MFC
BBS
RRC
GRC
RV3*
NHS
HRL
LN
Hand
Chuk
MecHnd/Chuk
ShkAbs
FJ
FK
SpdContr
Ending

How to order

● Without switch (built-in magnet for switch)

SHC - LB - 40 H - 100 - 20 ——— S I

● R type with switch (built-in magnet for switch)

SHC - LB - 40 H - 100 - 20 - R0 - R - S I

● With strong magnetic field proof switch (H0, H0Y) (built-in magnet for switch)

SHC-L2 - LB - 40 H - 100 - 20 - H0 - R - S I

Ⓐ Mounting *2 *3 *4

Ⓑ Bore size

Ⓒ Cushion

Ⓓ Stroke *5

Ⓔ Booster stroke

Ⓕ Switch model No. * indicates the lead wire length.

Ⓖ Switch quantity *7

Ⓗ Option *8 *9 *11

Ⓘ Accessory *10

Code	Description
Ⓐ Mounting	
00	Basic
LB	Axial foot
FA	Rod side flange
FB	Head side flange
CA	Eye bracket
CB	Clevis bracket (pin and snap ring attached)
TA	Rod side trunnion
TB	Head side trunnion
TC	Intermediate trunnion

Ⓑ Bore size (mm)	
40	ø40
50	ø50
63	ø63
80	ø80
100	ø100

Ⓒ Cushion	
H	Head side cushioned
N	Without cushion

Ⓓ Stroke (mm)

Bore size	Stroke *6	Custom stroke
ø40	40 to 700	In 5 mm increments
ø50	40 to 700	
ø63	40 to 800	
ø80	40 to 900	
ø100	40 to 1000	

Ⓔ Booster stroke (mm)	
10	10
20	20

Ⓕ Switch model No.

Grommet	Terminal box	Contact	Voltage AC	Voltage DC	Indicator	Lead wire
R1*	R1B	Proximity	●		1-color LED	2-wire
R2*	R2B			●		
R2Y*	R2YB			●	2-color LED	
R3*	R3B			●	1-color LED	3-wire
R3Y*	R3YB			●	2-color LED	
R0*	R0B	Reed	●	●	1-color LED	2-wire
R4*	R4B		●			
R5*	R5B		●	●	no indicator lamp	
R6*	R6B			●	1-color LED	
HO*	-		●	●	Strong magn field proof SW	

*** Lead wire length**	
Code	1 m (standard)
3	3 m (option)
5	5 m (option)

Ⓖ Switch quantity	
R	1 on rod side
H	1 on head side
D	2
T	3
4	4
5	5

Ⓗ Option

		Max. ambient temperature	instantaneous max. temp
J	Bellows	100°C	200°C
L	Bellows	250°C	400°C
Blank	Rod end form/male thread (standard)		
F	Rod end form/flange		
Blank	Piping port position, top from rod side (standard)		
R	Piping port position, right from rod side		
S	Piping port position, bottom from rod side		
T	Piping port position, left from rod side		
G1	Metal scraper		
P6	Copper and PTFE free		
A	Booster single control port		

Ⓘ Accessory	
I	Rod eye
Y	Rod clevis (pin and snap ring attached)
B11	Eye bracket (for clevis)
B21	Clevis bracket (for clevis)
B12	Eye bracket (for rod eye)
B22	Clevis bracket (for rod eye) (pin and snap ring attached)

⚠ Precautions for model No. selection

*1 : Mounting bracket will be shipped assembled with the product.
*2 : For TA (rod side trunnion), the booster single control ports C/D are located on the bottom when viewed from the rod side.
Refer to the booster single control port position full view on page 1162.
*3 : In the case of the TA (rod side trunnion), since the trunnion mounting position is placed at the moving part of the stroke projection or booster section return, the position of the stroke projection of the cylinder switch or the booster section return cannot be detected.
*4 : For TA (rod side trunnion) and TB (head side trunnion), piping port position cannot be specified on the trunnion shaft projecting surface.
*5 : For the stroke indicated in Item Ⓓ Stroke, indicate the full stroke (movement stroke + booster stroke).
*6 : Refer to page 1144 for min. stroke with switch.
*7 : When selecting TA or TB as mounting, the switch quantity is limited to "H" (1 on head side) for TA, and "R" (1 on rod side) for TB.
*8 : L (bellows (for max. ambient temperature 250°C)) is available as a made-to-order product.
*9 : Booster cylinder can be individually controlled.
In this case, select option A (booster single control port).
*10: "I" and "Y" cannot be selected together.
*11: The piping port position R and T cannot be selected for FA (rod side flange).

[Example of model No.]

SHC-LB-40H-100-20-R0-R-SI

Model No.: High power cylinder Double acting/double force

Ⓐ Mounting : Axial foot
Ⓑ Bore size : ø40 mm
Ⓒ Cushion : Head side cushioned
Ⓓ Stroke : 100 mm
(movement stroke 80 mm + booster stroke 20 mm)
Ⓔ Booster stroke : 20 mm
Ⓕ Switch model No.: Reed R0 switch, lead wire 1 m
Ⓖ Switch quantity : 1 on rod side
Ⓗ Option : Piping port position, bottom from rod side
Ⓘ Accessory : Rod eye

LCM
LCR
LCG
LCW
LCX
STM
STG
STS/STL
STR2
UCA2
ULK*
JSK/M2
JSG
JSC3/JSC4
USSD
UFCD
USC
UB
JSB3
LMB
LML
HCM
HCA
LBC
CAC4
UCAC2
CAC-N
UCAC-N
RCS2
RCC2
PCC
SHC
MCP
GLC
MFC
BBS
RRC
GRC
RV3*
NHS
HRL
LN
Hand
Chuk
MecHnd/Chuk
ShkAbs
FJ
FK
SpdContr
Ending

How to order R-switch

A) Switch body + mounting bracket

SHC - R0* - 40

- R0*: Switch model No. (Item Ⓕ on page 1146)
- 40: Bore size (Item Ⓑ on page 1146)

B) Switch body only

SW - R0*

- R0*: Switch model No. (Item Ⓕ on page 1146)

C) Mounting bracket set

SHC - R - 40

- 40: Bore size (Item Ⓑ on page 1146)

● Terminal box only
·For R□B

SW - RB

How to order H-switch

A) Switch body + mounting bracket set

SHC-L2 - H0 - 40

- H0: Switch model No. (Item Ⓕ on page 1146)
- 40: Bore size (Item Ⓑ on page 1146)

B) Switch body only

SW - H0

- H0: Switch model No. (Item Ⓕ on page 1146)

C) Mounting bracket set

SHC-L2 - H - 40

- 40: Bore size (Item Ⓑ on page 1146)

How to order mounting bracket

Table inside diameter (mm) / Mounting bracket	ø40	ø50	ø63	ø80	ø100
Foot (LB) *1	SHC-LB-40	SHC-LB-50	SHC-LB-63	SHC-LB-80	SHC-LB-100
Rod side flange (FA)	SHC-FA-40	SHC-FA-50	SHC-FA-63	SHC-FA-80	SHC-FA-100
Head side flange (FB)	SHC-FB-40	SHC-FB-50	SHC-FB-63	SHC-FB-80	SHC-FB-100
Eye bracket (CA)	SHC-CA-40	SHC-CA-50	SHC-CA-63	SHC-CA-80	SHC-CA-100
Clevis bracket (CB)	SHC-CB-40	SHC-CB-50	SHC-CB-63	SHC-CB-80	SHC-CB-100

*1: The foot mounting bracket is provided as 2 pcs./set.

Theoretical thrust table

(Unit: N)

Push ←
Pull →

Bore size (mm)	Operating direction	Piston position	Working pressure MPa 0.2	0.3	0.4	0.5	0.6	0.7	0.8	0.9
ø40	Push	Thrust	2.51×10^{2}	3.76×10^{2}	5.02×10^{2}	6.28×10^{2}	7.53×10^{2}	8.79×10^{2}	1.0×10^{3}	1.13×10^{3}
		Booster section	5.2×10^{2}	7.8×10^{2}	1.04×10^{3}	1.30×10^{3}	1.56×10^{3}	1.82×10^{3}	2.08×10^{3}	2.34×10^{3}
	Pull	Thrust	1.28×10^{2}	1.92×10^{2}	2.56×10^{2}	3.20×10^{2}	3.84×10^{2}	4.48×10^{2}	5.12×10^{2}	5.76×10^{2}
		Booster section	3.97×10^{2}	5.96×10^{2}	7.95×10^{2}	9.94×10^{2}	1.19×10^{3}	1.39×10^{3}	1.59×10^{3}	1.79×10^{3}
ø50	Push	Thrust	3.92×10^{2}	5.88×10^{2}	7.85×10^{2}	9.81×10^{2}	1.18×10^{3}	1.37×10^{3}	1.57×10^{3}	1.77×10^{3}
		Booster section	8.55×10^{2}	1.28×10^{3}	1.71×10^{3}	2.14×10^{3}	2.57×10^{3}	2.99×10^{3}	3.42×10^{3}	3.85×10^{3}
	Pull	Thrust	2.31×10^{2}	3.47×10^{2}	4.63×10^{2}	5.79×10^{2}	6.95×10^{2}	8.11×10^{2}	9.27×10^{2}	1.04×10^{3}
		Booster section	6.94×10^{2}	1.04×10^{3}	1.39×10^{3}	1.74×10^{3}	2.08×10^{3}	2.43×10^{3}	2.78×10^{3}	3.12×10^{3}
ø63	Push	Thrust	6.23×10^{2}	9.35×10^{2}	1.25×10^{3}	1.56×10^{3}	1.87×10^{3}	2.18×10^{3}	2.49×10^{3}	2.81×10^{3}
		Booster section	1.26×10^{3}	1.88×10^{3}	2.51×10^{3}	3.14×10^{3}	3.77×10^{3}	4.39×10^{3}	5.02×10^{3}	5.65×10^{3}
	Pull	Thrust	3.72×10^{2}	5.58×10^{2}	7.44×10^{2}	9.30×10^{2}	1.12×10^{3}	1.30×10^{3}	1.49×10^{3}	1.67×10^{3}
		Booster section	1.00×10^{3}	1.51×10^{3}	2.01×10^{3}	2.51×10^{3}	3.01×10^{3}	3.52×10^{3}	4.02×10^{3}	4.52×10^{3}
ø80	Push	Thrust	1.01×10^{3}	1.51×10^{3}	2.01×10^{3}	2.51×10^{3}	3.02×10^{3}	3.52×10^{3}	4.02×10^{3}	4.52×10^{3}
		Booster section	1.88×10^{3}	2.82×10^{3}	3.77×10^{3}	4.71×10^{3}	5.65×10^{3}	6.59×10^{3}	7.53×10^{3}	8.47×10^{3}
	Pull	Thrust	6.12×10^{2}	9.18×10^{2}	1.23×10^{3}	1.53×10^{3}	1.84×10^{3}	2.14×10^{3}	2.45×10^{3}	2.76×10^{3}
		Booster section	1.49×10^{3}	2.24×10^{3}	2.98×10^{3}	3.73×10^{3}	4.47×10^{3}	5.22×10^{3}	5.96×10^{3}	6.71×10^{3}
ø100	Push	Thrust	1.57×10^{3}	2.36×10^{3}	3.14×10^{3}	3.93×10^{3}	4.71×10^{3}	5.5×10^{3}	6.28×10^{3}	7.07×10^{3}
		Booster section	2.91×10^{3}	4.36×10^{3}	5.81×10^{3}	7.26×10^{3}	8.72×10^{3}	1.02×10^{4}	1.16×10^{4}	1.31×10^{4}
	Pull	Thrust	1.01×10^{3}	1.51×10^{3}	2.01×10^{3}	2.51×10^{3}	3.02×10^{3}	3.52×10^{3}	4.02×10^{3}	4.52×10^{3}
		Booster section	2.34×10^{3}	3.51×10^{3}	4.68×10^{3}	5.85×10^{3}	7.02×10^{3}	8.19×10^{3}	9.36×10^{3}	1.05×10^{4}

Note: When the booster section is pulled (backward), due to product structure, theoretical thrust is reduced to approximately 70% when the connection is released.

LCM
LCR
LCG
LCW
LCX
STM
STG
STS/STL
STR2
UCA2
ULK*
JSK/M2
JSG
JSC3/JSC4
USSD
UFCD
USC
UB
JSB3
LMB
LML
HCM
HCA
LBC
CAC4
UCAC2
CAC-N
UCAC-N
RCS2
RCC2
PCC
SHC
MCP
GLC
MFC
BBS
RRC
GRC
RV3*
NHS
HRL
LN
Hand
Chuk
MecHnd/Chuk
ShkAbs
FJ
FK
SpdContr
Ending

Internal structure and parts list

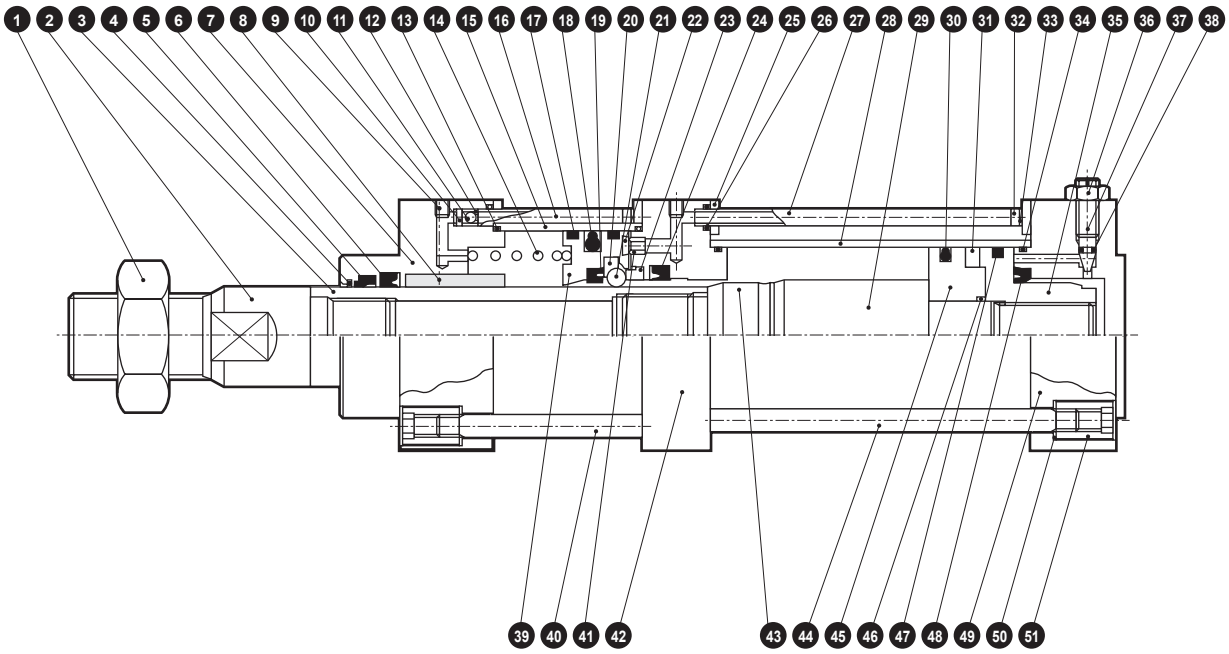

Cannot be disassembled

No.	Part name	Material	Remarks	No.	Part name	Material	Remarks
1	Rod nut	Steel	Zinc chromate	27	Pass-pipe (2)	Stainless steel	
2	Cap	Steel	Manganese phosphate	28	Cylinder tube	Aluminum alloy	Hard alumite
3	Piston rod	Steel	Industrial chrome plating	29	Connection piston	Steel	Industrial chrome plating
4	Metal scraper	Copper alloy	G1 type only	30	Piston packing (2)	Nitrile rubber	
5	Dust wiper	Nitrile rubber		31	Magnet	Plastic	
6	Rod packing (1)	Nitrile rubber		32	Hexagon socket head cap screw	Alloy steel	Black finish
7	Rod cover	Aluminum alloy	Black alumite	33	Spring washer	Steel	Black finish
8	Bush	Copper alloy casting	Oil impregnation	34	Cylinder gasket (2)	Nitrile rubber	
9	Hexagon socket set screw	Alloy steel	Black finish	35	Piston (H)	Aluminum alloy	
10	Spring pin	Steel		36	Needle nut	Copper alloy	Zinc chromate
11	Check ball	Alloy steel		37	Cushion needle	Copper alloy	
12	Fixed orifice	Copper alloy		38	Needle gasket	Nitrile rubber	
13	Cylinder gasket (1)	Nitrile rubber		39	Booster piston	Alloy steel	
14	Compression spring	Steel	Electrodeposition	40	Tie rod (1)	Steel	Zinc chromate
15	Booster pipe	Aluminum alloy	Hard alumite	41	Valve seat	Copper alloy	
16	Pass-pipe (1)	Stainless steel		42	Intermediate cover	Aluminum alloy	Black alumite
17	Wear ring (1)	Polyacetal		43	Connection collar	Alloy steel	
18	Piston packing (1)	Nitrile rubber		44	Tie rod (2)	Steel	Zinc chromate
19	Cushion packing (1)	Nitrile rubber		45	Piston (R)	Aluminum alloy	
20	Steel ball bearing	Nitrile rubber		46	Piston gasket	Nitrile rubber	
21	Steel ball	Alloy steel		47	Wear ring (2)	Acetal resin	
22	Seal cushion	Nitrile rubber		48	Cushion packing (2)	Nitrile rubber	
23	Ball stopper	Steel		49	Head cover	Aluminum alloy	Black alumite
24	Rod packing (2)	Nitrile rubber		50	Conical spring washer	Steel	Black finish
25	Packing holder	Steel	Manganese phosphate	51	Round nut	Steel	Zinc chromate
26	Pass-pipe gasket	Nitrile rubber					

Note: This product cannot be disassembled.

Dimensions

● Basic (00)

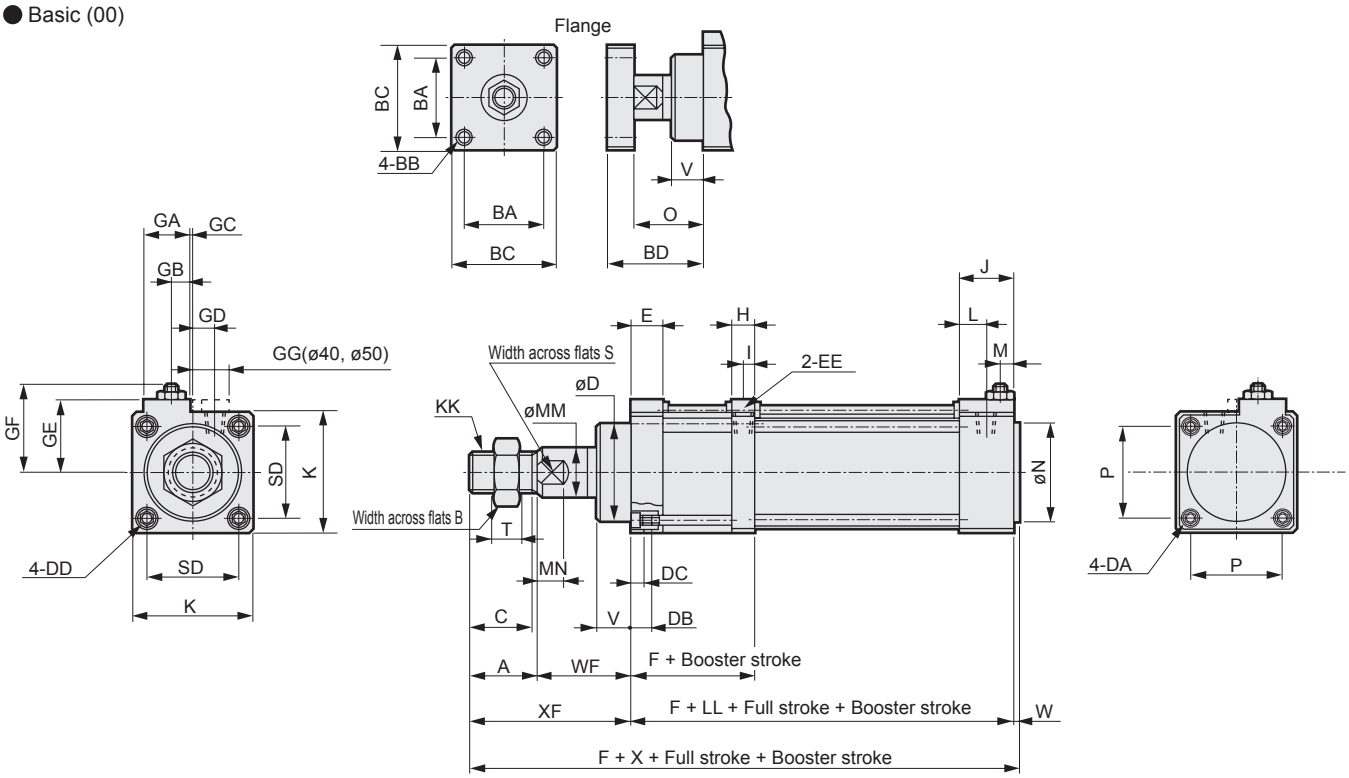

*1 : GG dimension applies to ø40 and ø50.
*2 : For dimensions with bellows, refer to page 1162.
*3 : For the dimensions of the accessories, refer to page 1163.

Bore size (mm)	Basic (00) basic dimensions																					
	A	B	BA	BB	BC	BD	C	D	DA	DB	DC	DD	E	EE	F	GA	GB	GC	GD	GE	GF	H
ø40	36	32	32	M8	50	68	34	ø43	M8	9	3.5	M6	25	Rc1/8	74.5	26	4	-	8.5	36.5	47.5	18
ø50	45	41	40	M10	60	75	43	ø51	M8	9	3.5	M6	26.5	Rc1/4	81	30	2	-	10	43	53.5	22
ø63	50	46	48	M12	70	74.5	47	ø57	M8	12	4	M8	33	Rc1/4	90	32	9	1	13	48	58	24
ø80	56	55	54	M14	80	89	53	ø62.5	M12	12	4	M10	34	Rc3/8	105	38	8	1	16	59	69	28
ø100	72	70	70	M16	100	100	69	ø75	M12	15	5	M12	37	Rc3/8	110.5	41	12.5	5	20	71	81	26

Bore size (mm)	I	J	K	KK	L	LL	M	MM	MN	N	O	P	S	SD	T	V	W	WF	X	XF	GG
ø40	8	26	57	M22x1.5	7	65.5	8	ø25	14	ø31	52	40.5	23	44	13	24	2	48	151.5	84	20
ø50	10.5	32	69	M26x1.5	9	73.5	9	ø30	17	ø38	54	48	26	56	16	24	2	53	173.5	98	20
ø63	11	30	80	M30x1.5	15	73	10	ø35	20	ø38	53	59	31	63	18	21	3	63	189	113	-
ø80	13	34	98	M36x1.5	17	87.5	11	ø40	26	ø43	64	74	36	78	21	24	2	70	215.5	126	-
ø100	14	37	118	M45x1.5	22	96	15	ø50	26	ø51	71	90	46	96	27	30	2	87	257	159	-

● R-switch mounting position

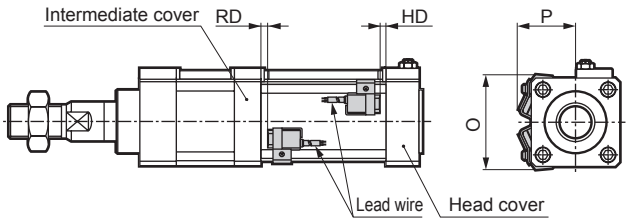

Bore size (mm)	RD	HD	O	P
ø40	6	4	66	42
ø50	4.5	7	73	44
ø63	7	6	84	47
ø80	12	11.5	104	58
ø100	12	16	120	64

● H-switch mounting position

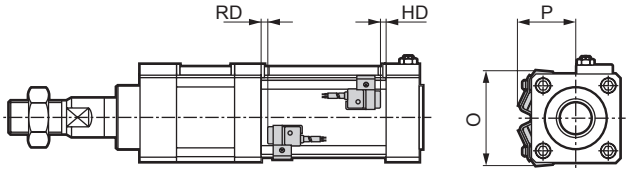

Bore size (mm)	RD	HD	O	P
ø40	4.5	2.5	66	42
ø50	3	5.5	73	44
ø63	5.5	4.5	84	47
ø80	10.5	10	104	58
ø100	10.5	14.5	120	64

LCM
LCR
LCG
LCW
LCX
STM
STG
STS/STL
STR2
UCA2
ULK*
JSK/M2
JSG
JSC3/JSC4
USSD
UFCD
USC
UB
JSB3
LMB
LML
HCM
HCA
LBC
CAC4
UCAC2
CAC-N
UCAC-N
RCS2
RCC2
PCC
SHC
MCP
GLC
MFC
BBS
RRC
GRC
RV3*
NHS
HRL
LN
Hand
Chuk
MecHnd/Chuk
ShkAbs
FJ
FK
SpdContr
Ending

Dimensions CAD

● Axial foot (LB)

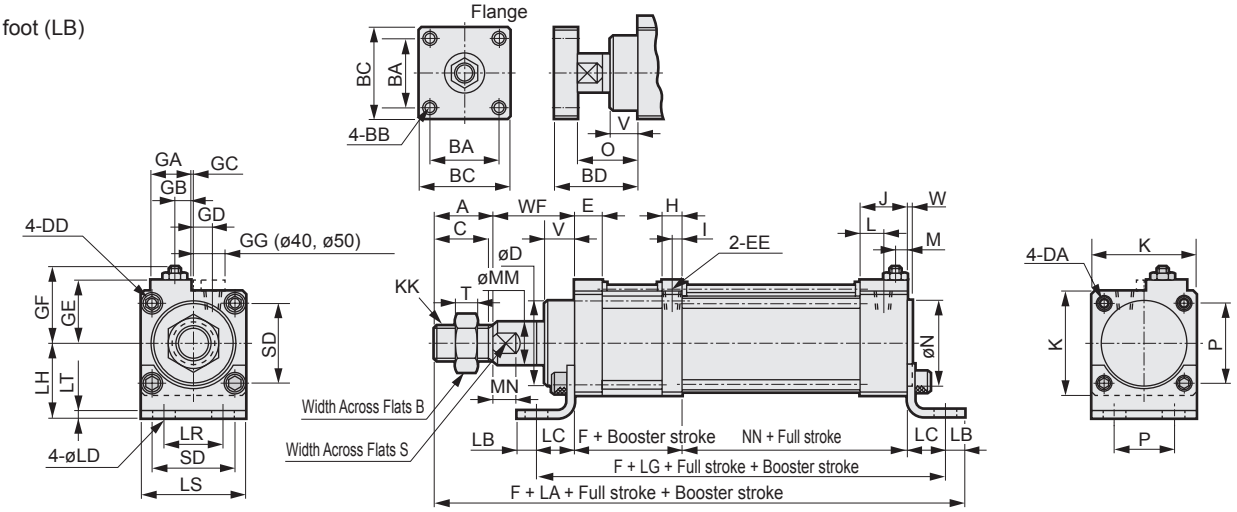

*1 : GG dimension applies to ø40 and ø50.
*2 : For dimensions with bellows, refer to page 1162.
*3 : For the dimensions of the accessories, refer to page 1163.

Bore size (mm)	Axial foot (LB) basic dimensions																						
	A	B	BA	BB	BC	BD	C	D	DA	DD	E	EE	F	GA	GB	GC	GD	GE	GF	H	I	J	K
ø40	36	32	32	M8	50	68	34	ø43	M8	M6	25	Rc1/8	74.5	26	4	-	8.5	36.5	47.5	18	8	26	57
ø50	45	41	40	M10	60	75	43	ø51	M8	M6	26.5	Rc1/4	81	30	2	-	10	43	53.5	22	10.5	32	69
ø63	50	46	48	M12	70	74.5	47	ø57	M8	M8	33	Rc1/4	90	32	9	1	13	48	58	24	11	30	80
ø80	56	55	54	M14	80	89	53	ø62.5	M12	M10	34	Rc3/8	105	38	8	1	16	59	69	28	13	34	98
ø100	72	70	70	M16	100	100	69	ø75	M12	M12	37	Rc3/8	110.5	41	12.5	5	20	71	81	26	14	37	118

Bore size (mm)	KK	L	LA	LB	LC	LD	LG	LH	LR	LS	LT	M	MM	MN	N	NN	O	P	S	SD	T	V	W	WF	GG
ø40	M 22 x 1.5	7	179	10	19.5	9	104.5	40	40	57	3.2	8	ø25	14	ø31	65.5	52	40.5	23	44	13	24	2	48	20
ø50	M 26 x 1.5	9	205.5	12	22	9	117.5	40	46	69	4.5	9	ø30	17	ø38	73.5	54	48	26	56	16	24	2	53	20
ø63	M 30 x 1.5	15	228	12	30	11	133	50	60	80	4.5	10	ø35	20	ø38	73	53	59	31	63	18	21	3	63	-
ø80	M 36 x 1.5	17	264.5	14	37	14	161.5	60	74	98	6.0	11	ø40	26	ø43	87.5	64	74	36	78	21	24	2	70	-
ø100	M 45 x 1.5	22	307	21	31	14	158	67	80	118	6.0	15	ø50	26	ø51	96	71	90	46	96	27	30	2	87	-

● Rod side flange (FA)

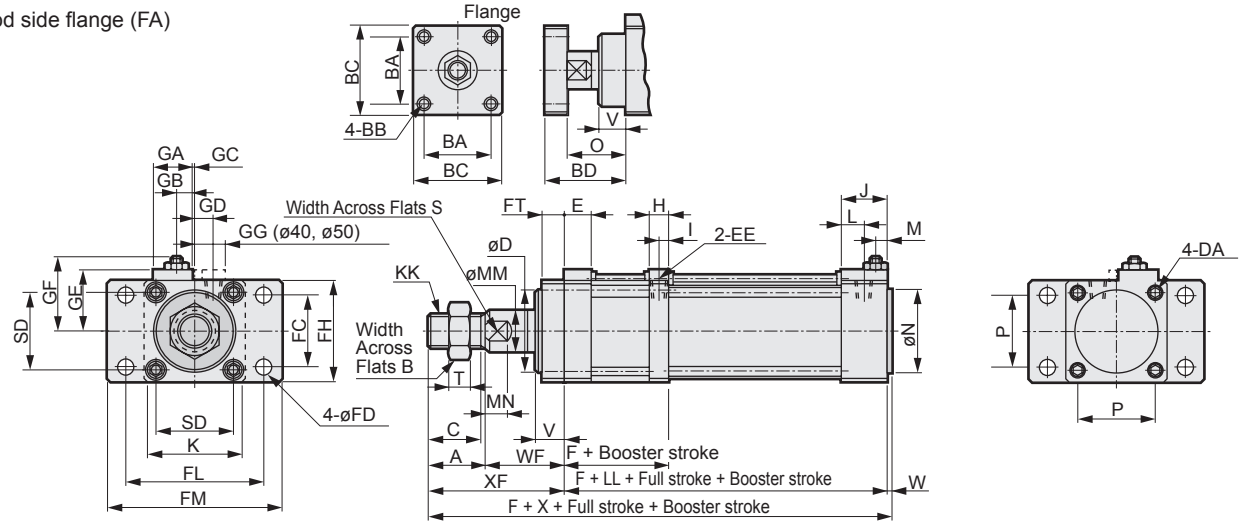

*1 : GG dimension applies to ø40 and ø50.
*2 : For dimensions with bellows, refer to page 1162.
*3 : For the dimensions of the accessories, refer to page 1163.

Bore size (mm)	Rod side flange (FA) basic dimensions																						
	A	B	BA	BB	BC	BD	C	D	DA	E	EE	F	FC	FD	FH	FL	FM	FT	GA	GB	GC	GD
ø40	36	32	32	M8	50	68	34	ø43	M8	25	Rc1/8	74.5	40	ø9	57	80	100	12	26	4	-	8.5
ø50	45	41	40	M10	60	75	43	ø51	M8	26.5	Rc1/4	81	47	ø9	69	85	108	12	30	2	-	10
ø63	50	46	48	M12	70	74.5	47	ø57	M8	33	Rc1/4	90	60	ø11	80	106	130	16	32	9	1	13
ø80	56	55	54	M14	80	89	53	ø62.5	M12	34	Rc3/8	105	74	ø14	98	125	153	19	38	8	1	16
ø100	72	70	70	M16	100	100	69	ø75	M12	37	Rc3/8	110.5	88	ø14	118	144	180	19	41	12.5	5	20

Bore size (mm)	GE	GF	H	I	J	K	KK	L	LL	M	MM	MN	N	O	P	S	SD	T	V	W	WF	X	XF	GG
ø40	36.5	47.5	18	8	26	57	M 22 x 1.5	7	65.5	8	ø25	14	ø31	52	40.5	23	44	13	24	2	48	151.5	84	20
ø50	43	53.5	22	10.5	32	69	M 26 x 1.5	9	73.5	9	ø30	17	ø38	54	48	26	56	16	24	2	53	173.5	98	20
ø63	48	58	24	11	30	80	M 30 x 1.5	15	73	10	ø35	20	ø38	53	59	31	63	18	21	3	63	189	113	-
ø80	59	69	28	13	34	98	M 36 x 1.5	17	87.5	11	ø40	26	ø43	64	74	36	78	21	24	2	70	215.5	126	-
ø100	71	81	26	14	37	118	M 45 x 1.5	22	96	15	ø50	26	ø51	71	90	46	96	27	30	2	87	257	159	-

Dimensions

● Head side flange FB

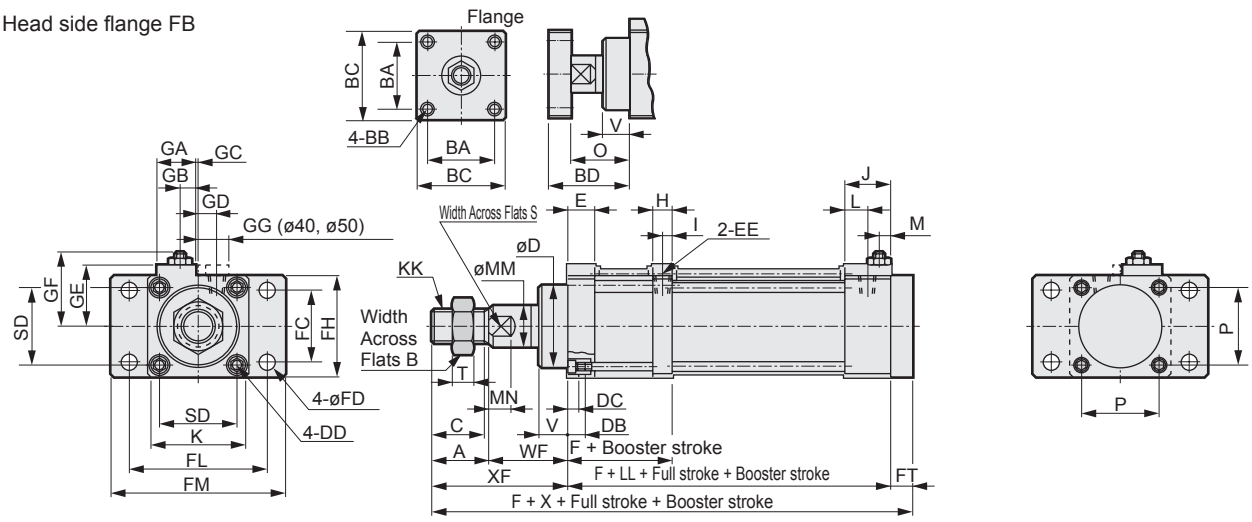

*1 : GG dimension applies to ø40 and ø50.
*2 : For dimensions with bellows, refer to page 1162.
*3 : For the dimensions of the accessories, refer to page 1163.

Bore size (mm)	Head side flange (FB) basic dimensions																							
	A	B	BA	BB	BC	BD	C	D	DB	DC	DD	E	EE	F	FC	FD	FH	FL	FM	FT	GA	GB	GC	GD
ø40	36	32	32	M8	50	68	34	ø43	9	3.5	M6	25	Rc1/8	74.5	40	ø9	57	80	100	12	26	4	-	8.5
ø50	45	41	40	M10	60	75	43	ø51	9	3.5	M6	26.5	Rc1/4	81	47	ø9	69	85	108	12	30	2	-	10
ø63	50	46	48	M12	70	74.5	47	ø57	12	4	M8	33	Rc1/4	90	60	ø11	80	106	130	16	32	9	1	13
ø80	56	55	54	M14	80	89	53	ø62.5	12	4	M10	34	Rc3/8	105	74	ø14	98	125	153	19	38	8	1	16
ø100	72	70	70	M16	100	100	69	ø75	15	5	M12	37	Rc3/8	110.5	88	ø14	118	144	180	19	41	12.5	5	20

Bore size (mm)	GE	GF	H	I	J	K	KK	L	LL	M	MM	MN	O	P	S	SD	T	V	WF	X	XF	GG
ø40	36.5	47.5	18	8	26	57	M 22 x 1.5	7	65.5	8	ø25	14	52	40.5	23	44	13	24	48	161.5	84	20
ø50	43	53.5	22	10.5	32	69	M 26 x 1.5	9	73.5	9	ø30	17	54	48	26	56	16	24	53	183.5	98	20
ø63	48	58	24	11	30	80	M 30 x 1.5	15	73	10	ø35	20	53	59	31	63	18	21	63	202	113	-
ø80	59	69	28	13	34	98	M 36 x 1.5	17	87.5	11	ø40	26	64	74	36	78	21	24	70	232.5	126	-
ø100	71	81	26	14	37	118	M 45 x 1.5	22	96	15	ø50	26	71	90	46	96	27	30	87	274	159	-

● Eye bracket (CA)

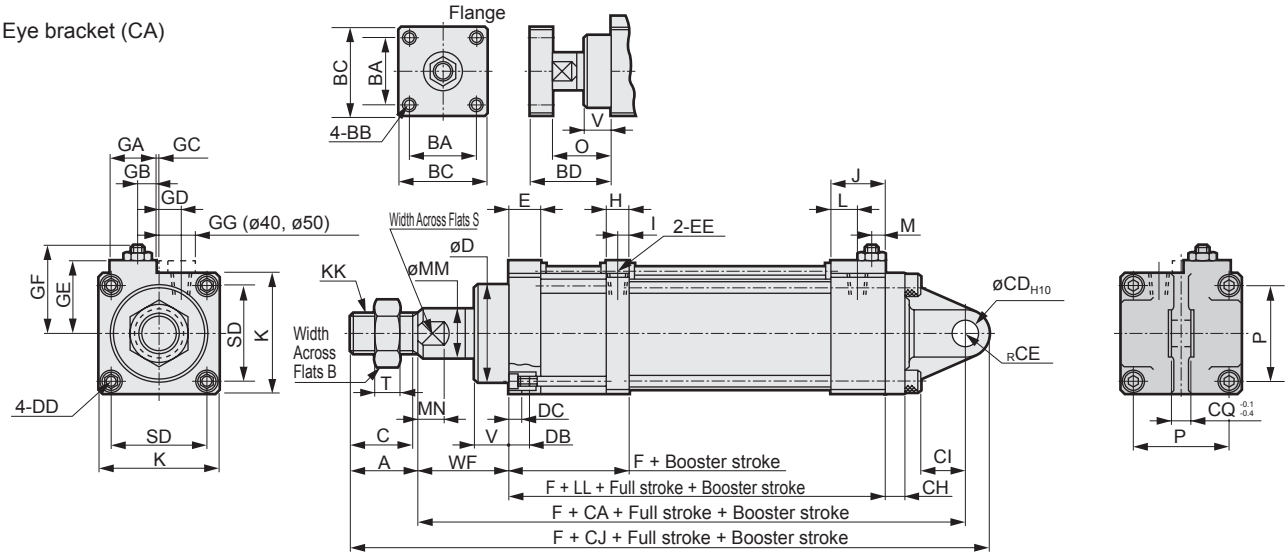

*1 : GG dimension applies to ø40 and ø50.
*2 : For dimensions with bellows, refer to page 1162.
*3 : For the dimensions of the accessories, refer to page 1163.

Bore size (mm)	Eye bracket (CA) basic dimensions																					
	A	B	BA	BB	BC	BD	C	CA	CD	CE	CH	CI	CJ	CQ	D	DB	DC	DD	E	EE	F	GA
ø40	36	32	32	M8	50	68	34	145.5	12	12	10	18	193.5	18	ø43	9	3.5	M6	25	Rc1/8	74.5	26
ø50	45	41	40	M10	60	75	43	158.5	12	12	10	18	215.5	18	ø51	9	3.5	M6	26.5	Rc1/4	81	30
ø63	50	46	48	M12	70	74.5	47	173	14	16	10	24	239	20	ø57	12	4	M8	33	Rc1/4	90	32
ø80	56	55	54	M14	80	89	53	209.5	20	20	14	30	285.5	28	ø62.5	12	4	M10	34	Rc3/8	105	38
ø100	72	70	70	M16	100	100	69	235	20	20	16	30	327	28	ø75	15	5	M12	37	Rc3/8	110.5	41

Bore size (mm)	GB	GC	GD	GE	GF	H	I	J	K	KK	L	LL	M	MM	MN	O	P	S	SD	T	V	WF	GG
ø40	4	-	8.5	36.5	47.5	18	8	26	57	M 22 x 1.5	7	65.5	8	ø25	14	52	40.5	23	44	13	24	48	20
ø50	2	-	10	43	53.5	22	10.5	32	69	M 26 x 1.5	9	73.5	9	ø30	17	54	48	26	56	16	24	53	20
ø63	9	1	13	48	58	24	11	30	80	M 30 x 1.5	15	73	10	ø35	20	53	59	31	63	18	21	63	-
ø80	8	1	16	59	69	28	13	34	98	M 36 x 1.5	17	87.5	11	ø40	26	64	74	36	78	21	24	70	-
ø100	12.5	5	20	71	81	26	14	37	118	M 45 x 1.5	22	96	15	ø50	26	71	90	46	96	27	30	87	-

LCM
LCR
LCG
LCW
LCX
STM
STG
STS/STL
STR2
UCA2
ULK*
JSK/M2
JSG
JSC3/JSC4
USSD
UFCD
USC
UB
JSB3
LMB
LML
HCM
HCA
LBC
CAC4
UCAC2
CAC-N
UCAC-N
RCS2
RCC2
PCC
SHC
MCP
GLC
MFC
BBS
RRC
GRC
RV3*
NHS
HRL
LN
Hand
Chuk
MecHnd/Chuk
ShkAbs
FJ
FK
SpdContr
Ending

Dimensions CAD

● Clevis bracket (CB)

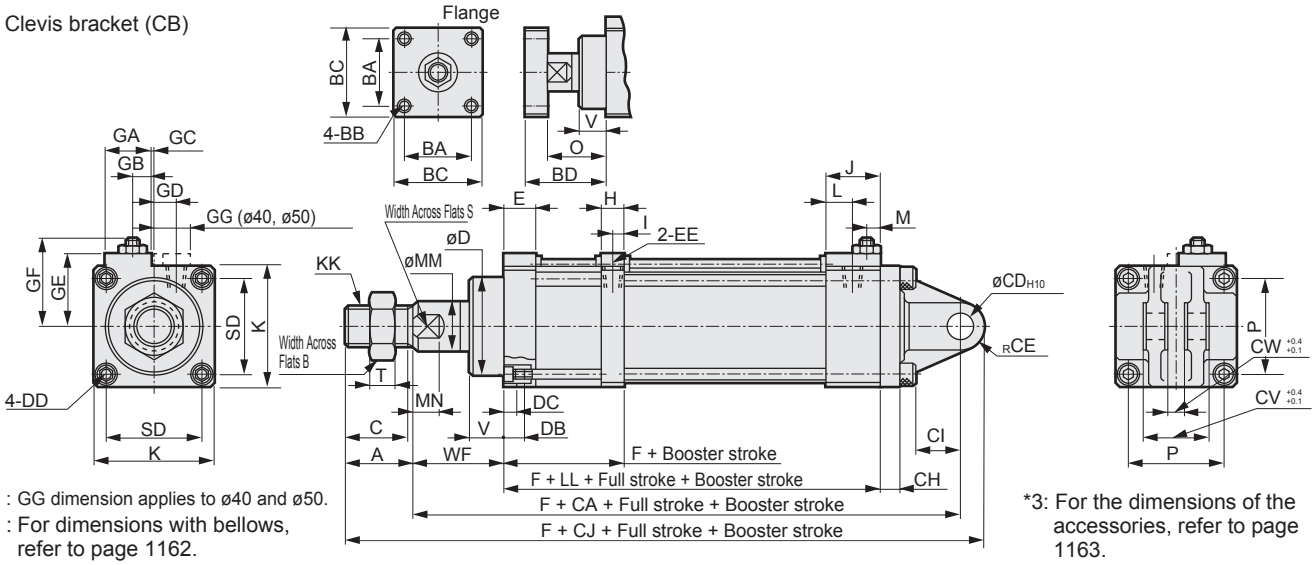

*1 : GG dimension applies to ø40 and ø50.
*2 : For dimensions with bellows, refer to page 1162.
*3: For the dimensions of the accessories, refer to page 1163.

Bore size (mm)	Clevis bracket (CB) basic dimensions																					
	A	B	BA	BB	BC	BD	C	CA	CD	CE	CH	CI	CJ	CV	CW	D	DB	DC	DD	E	EE	F
ø40	36	32	32	M8	50	68	34	145.5	12	12	10	18	193.5	36	18	ø43	9	3.5	M6	25	Rc1/8	74.5
ø50	45	41	40	M10	60	75	43	158.5	12	12	10	18	215.5	36	18	ø51	9	3.5	M6	26.5	Rc1/4	81
ø63	50	46	48	M12	70	74.5	47	173	14	16	10	24	239	40	20	ø57	12	4	M8	33	Rc1/4	90
ø80	56	55	54	M14	80	89	53	209.5	20	20	14	30	285.5	56	28	ø62.5	12	4	M10	34	Rc3/8	105
ø100	72	70	70	M16	100	100	69	235	20	20	16	30	327	56	28	ø75	15	5	M12	37	Rc3/8	110.5

Bore size (mm)	GA	GB	GC	GD	GE	GF	H	I	J	K	KK	L	LL	M	MM	MN	O	P	S	SD	T	V	WF	GG
ø40	26	4	-	8.5	36.5	47.5	18	8	26	57	M 22 x 1.5	7	65.5	8	ø25	14	52	40.5	23	44	13	24	48	20
ø50	30	2	-	10	43	53.5	22	10.5	32	69	M 26 x 1.5	9	73.5	9	ø30	17	54	48	26	56	16	24	53	20
ø63	32	9	1	13	48	58	24	11	30	80	M 30 x 1.5	15	73	10	ø35	20	53	59	31	63	18	21	63	-
ø80	38	8	1	16	59	69	28	13	34	98	M 36 x 1.5	17	87.5	11	ø40	26	64	74	36	78	21	24	70	-
ø100	41	12.5	5	20	71	81	26	14	37	118	M 45 x 1.5	22	96	15	ø50	26	71	90	46	96	27	30	87	-

● Rod side trunnion (TA)

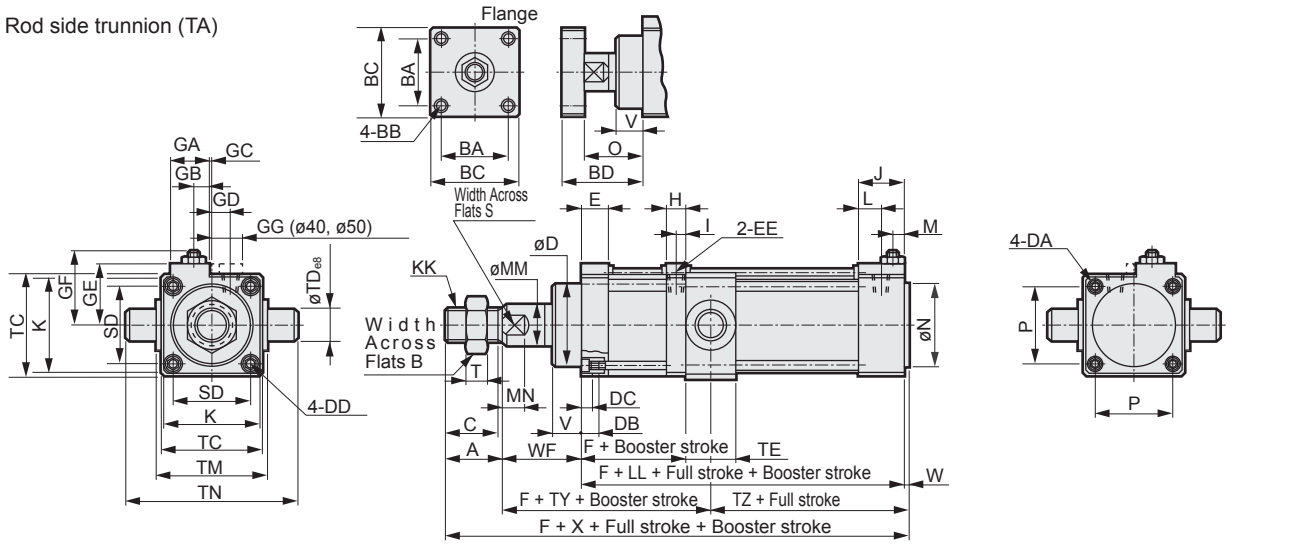

*1 : GG dimension applies to ø40 and ø50.
*2 : Since it would hit the trunnion, a switch cannot be installed at the forward end.
*3 : For dimensions with bellows, refer to page 1162.
*4 : For the dimensions of the accessories, refer to page 1163.

Bore size (mm)	Rod side trunnion (TA) basic dimensions																							
	A	B	BA	BB	BC	BD	C	D	DA	DB	DC	DD	E	EE	F	GA	GB	GC	GD	GE	GF	H	I	J	K
ø40	36	32	32	M8	50	68	34	ø43	M8	9	3.5	M6	25	Rc1/8	74.5	26	4	-	8.5	36.5	47.5	18	8	26	57
ø50	45	41	40	M10	60	75	43	ø51	M8	9	3.5	M6	26.5	Rc1/4	81	30	2	-	10	43	53.5	22	10.5	32	69
ø63	50	46	48	M12	70	74.5	47	ø57	M8	12	4	M8	33	Rc1/4	90	32	9	1	13	48	58	24	11	30	80
ø80	56	55	54	M14	80	89	53	ø62.5	M12	12	4	M10	34	Rc3/8	105	38	8	1	16	59	69	28	13	34	98
ø100	72	70	70	M16	100	100	69	ø75	M12	15	5	M12	37	Rc3/8	110.5	41	12.5	5	20	71	81	26	14	37	118

Bore size (mm)	KK	L	LL	M	MM	MN	N	O	P	S	SD	T	TC	TD	TE	TM	TN	TY	TZ	V	W	WF	X	GG
ø40	M 22 x 1.5	7	65.5	8	ø25	14	ø31	52	40.5	23	44	13	57	16	30	63	95	63	52.5	24	2	48	151.5	20
ø50	M 26 x 1.5	9	73.5	9	ø30	17	ø38	54	48	26	56	16	67	18	30	80	116	68	60.5	24	2	53	173.5	20
ø63	M 30 x 1.5	15	73	10	ø35	20	ø38	53	59	31	63	18	82	20	35	90	130	80.5	58.5	21	3	63	189	-
ø80	M 36 x 1.5	17	87.5	11	ø40	26	ø43	64	74	36	78	21	100	25	40	115	165	90	69.5	24	2	70	215.5	-
ø100	M 45 x 1.5	22	96	15	ø50	26	ø51	71	90	46	96	27	121	35	50	135	205	112	73	30	2	87	257	-

Dimensions

● Head side trunnion (TB)

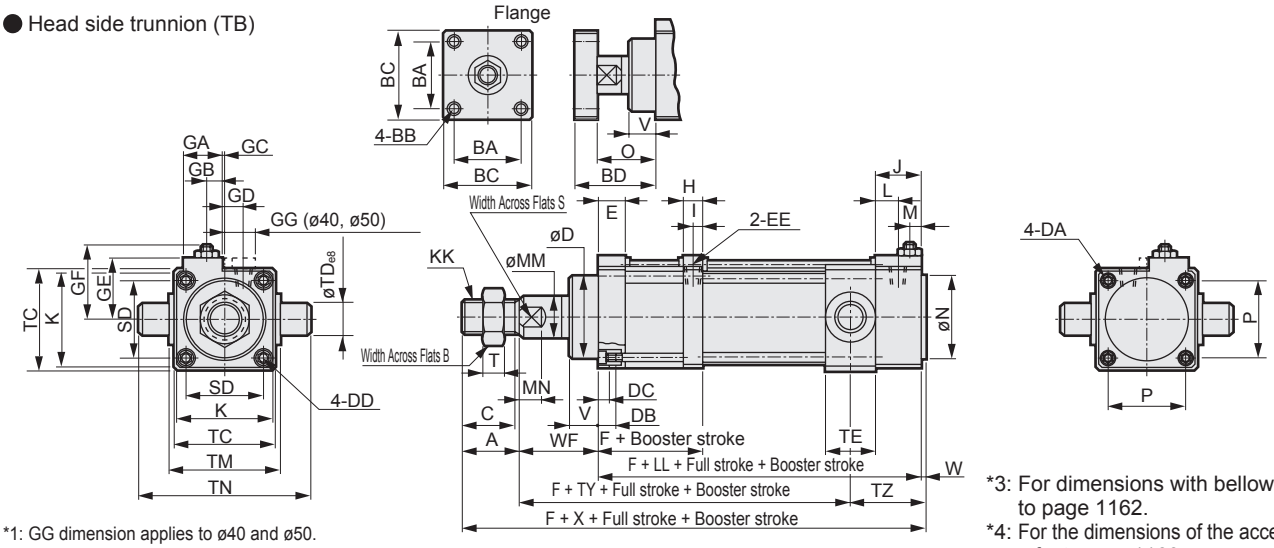

*1: GG dimension applies to ø40 and ø50.
*2: For all strokes 100mm or less, a cylinder switch cannot be installed.
*3: For dimensions with bellows, refer to page 1162.
*4: For the dimensions of the accessories, refer to page 1163.

Bore size (mm)	Head side trunnion (TB) basic dimensions																								
	A	B	BA	BB	BC	BD	C	D	DA	DB	DC	DD	E	EE	F	GA	GB	GC	GD	GE	GF	H	I	J	K
ø40	36	32	32	M8	50	68	34	ø43	M8	9	3.5	M6	25	Rc1/8	74.5	26	4	-	8.5	36.5	47.5	18	8	26	57
ø50	45	41	40	M10	60	75	43	ø51	M8	9	3.5	M6	26.5	Rc1/4	81	30	2	-	10	43	53.5	22	10.5	32	69
ø63	50	46	48	M12	70	74.5	47	ø57	M8	12	4	M8	33	Rc1/4	90	32	9	1	13	48	58	24	11	30	80
ø80	56	55	54	M14	80	89	53	ø62.5	M12	12	4	M10	34	Rc3/8	105	38	8	1	16	59	69	28	13	34	98
ø100	72	70	70	M16	100	100	69	ø75	M12	15	5	M12	37	Rc3/8	110.5	46	12.5	5	20	71	81	26	14	37	118

Bore size (mm)	KK	L	LL	M	MM	MN	N	O	P	S	SD	T	TC	TD	TE	TM	TN	TY	TZ	V	W	WF	X	GG
ø40	M 22 x 1.5	7	65.5	8	ø25	14	ø31	52	40.5	23	44	13	57	16	30	63	95	72.5	43	24	2	48	151.5	20
ø50	M 26 x 1.5	9	73.5	9	ø30	17	ø38	54	48	26	56	16	67	18	30	80	116	79.5	49	24	2	53	173.5	20
ø63	M 30 x 1.5	15	73	10	ø35	20	ø38	53	59	31	63	18	82	20	35	90	130	88.5	50.5	21	3	63	189	-
ø80	M 36 x 1.5	17	87.5	11	ø40	26	ø43	64	74	36	78	21	100	25	40	115	165	103.5	56	24	2	70	215.5	-
ø100	M 45 x 1.5	22	96	15	ø50	26	ø51	71	90	46	96	27	121	35	50	135	205	121	64	30	2	87	257	-

● Intermediate trunnion (TC)

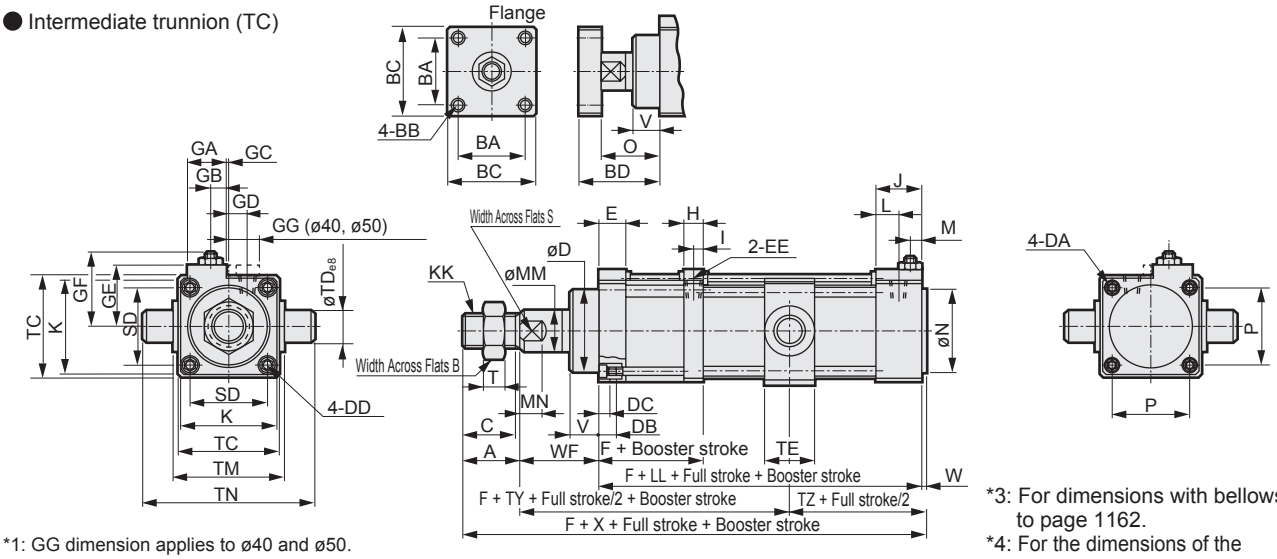

*1: GG dimension applies to ø40 and ø50.
*2: For all strokes 100mm or less, a cylinder switch cannot be installed.
*3: For dimensions with bellows, refer to page 1162.
*4: For the dimensions of the accessories, refer to page 1163.

Bore size (mm)	Intermediate trunnion (TC) basic dimensions																								
	A	B	BA	BB	BC	BD	C	D	DA	DB	DC	DD	E	EE	F	GA	GB	GC	GD	GE	GF	H	I	J	K
ø40	36	32	32	M8	50	68	34	ø43	M8	9	3.5	M6	25	Rc1/8	74.5	26	4	-	8.5	36.5	47.5	18	8	26	57
ø50	45	41	40	M10	60	75	43	ø51	M8	9	3.5	M6	26.5	Rc1/4	81	30	2	-	10	43	53.5	22	11	32	69
ø63	50	46	48	M12	70	74.5	47	ø57	M8	12	4	M8	33	Rc1/4	90	32	9	1	13	48	58	24	11	30	80
ø80	56	55	54	M14	80	89	53	ø62.5	M12	12	4	M10	34	Rc3/8	105	38	8	1	16	59	69	28	13	34	98
ø100	72	70	70	M16	100	100	69	ø75	M12	15	5	M12	37	Rc3/8	110.5	41	12.5	5	20	71	81	26	14	37	118

Bore size (mm)	KK	L	LL	M	MM	MN	N	O	P	S	SD	T	TC	TD	TE	TM	TN	TY	TZ	V	W	WF	X	GG
ø40	M 22 x 1.5	7	65.5	8	ø25	14	ø31	52	40.5	23	44	13	57	16	30	63	95	68	47.5	24	2	48	151.5	20
ø50	M 26 x 1.5	9	73.5	9	ø30	17	ø38	54	48	26	56	16	67	18	30	80	116	74	54.5	24	2	53	173.5	20
ø63	M 30 x 1.5	15	73	10	ø35	20	ø38	53	59	31	63	18	82	20	35	90	130	84.5	54.5	21	3	63	189	-
ø80	M 36 x 1.5	17	87.5	11	ø40	26	ø43	64	74	36	78	21	100	25	40	115	165	97	62.5	24	2	70	215.5	-
ø100	M 45 x 1.5	22	96	15	ø50	26	ø51	71	90	46	96	27	121	35	50	135	205	116.5	68.5	30	2	87	257	-

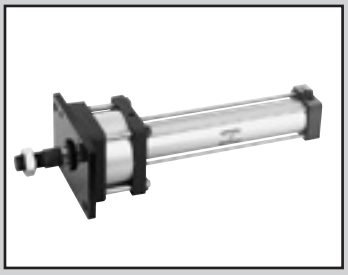

High power cylinder/double acting/quad force

SHC-K Series

● Equivalent bore size: ø40/ø50/ø63/ø80/ø100

JIS symbol

RoHS CAD

Specifications

Item		SHC-K				
Bore size	mm	ø40	ø50	ø63	ø80	ø100
Actuation		Double acting/projection quad force				
Working fluid		Compressed air				
Max. working pressure	MPa	0.9 (≈130 psi, 9 bar)				
Min. working pressure	MPa	0.2 (≈29 psi, 2 bar)	0.15 (≈22 psi, 1.5 bar)			
Proof pressure	MPa	1.35 (≈200 psi, 13.5 bar)				
Ambient temperature	°C	-10 (14°F) to 60 (140°F) (no freezing)				
Port size	Rc	1/8	1/4	1/4	3/8	3/8
Stroke tolerance	mm	$^{+1.3}_{0}$ (to 300), $^{+1.7}_{0}$ (to 1000), $^{+2.1}_{0}$ (1000 to)				
Working piston speed *1	mm/s Cylinder	50 to 500				
	mm/s Booster section	10 to 30 (booster section single control)				
Cushion		Air cushion				
Lubrication		Not required (use turbine oil class 1 ISO VG32 if necessary for lubrication)				
Rod side allowable absorbed energy (J)		23.3	39.9	60.2	102	164
Head side allowable absorbed energy (J)		5.84	9.99	15.1	25.5	41.0

*1: As the piston speed differs depending on the supply pressure, refer to the technical data on page 1166.

Stroke

Bore size (mm)	Standard stroke (mm)	Max. stroke (mm)	Booster stroke	Dead zone
ø40	100, 150, 200, 250, 300, 400, 500	700	10, 20	1.9
ø50				1.9
ø63		800		2
ø80		900		2.3
ø100		1000		2.8

Normal use

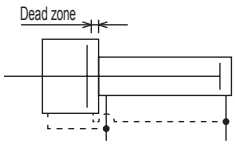

Booster section single operation

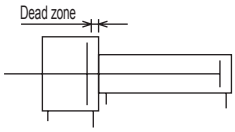

*1: The custom stroke is available in 5 mm increments.
*2: Dead zone (area not generating boosted thrust) stroke, until connection with booster piston completes, is included in the booster stroke.
*3: Min. stroke is 40 mm with or without switch. For types with switch, minimum stroke varies depending on mounting method. Refer to the following table.

Min. stroke with switch

Bore size (mm)	When mounted on the same surface	When mounted on different surfaces
	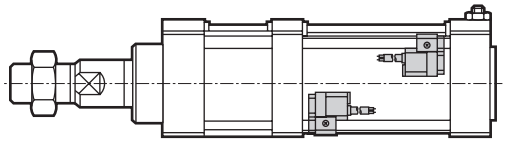	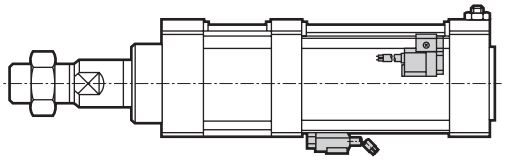
ø40	65	40
ø50		
ø63	40	
ø80		
ø100		

Switch specifications

● 1-color/2-color LED

Item		Proximity 2-wire			Proximity 3-wire	
		R1	R2	R2Y (2-color LED)	R3	R3Y (2-color LED)
Applications		Programmable controller, relay, compact solenoid valve	Dedicated for programmable controller		For programmable controller, relay, IC circuit, solenoid valve	
Output method		-			NPN output	
Power supply voltage		-			4.5 VDC to 28 VDC	
Load voltage		85 VAC to 265 VAC	10 to 30 VDC		30 VDC or less	
Load current		5 to 100 mA	5 to 30 mA		200 mA DC or less	100 mA DC or less
Indicator		LED (Lit when ON)		Red/green LED (Lit when ON)	LED (Lit when ON)	Red/green LED (Lit when ON)
Leakage current		1 mA or less with 100 VAC, 2 mA or less with 200 VAC	1 mA or less	1.2 mA or less	10 μA or less	
Weightg	Grommet	1 m:42 3 m:100 5 m:158		1 m:56 3 m:114 5 m:172	1 m:42 3 m:100 5 m:158	1 m:56 3 m:114 5 m:172
	Terminal box	68		82	68	82

Item		Reed 2-wire								
		R0			R4		R5			R6
Applications		Relay, programmable controller			For high capacity relay, solenoid valve		For programmable controller, relay, IC circuit (without indicator lamp), serial connection			Dedicated for programmable controller (with DC self-hold)
Load voltage		12/24 VDC	110 VAC	220 VAC	110 VAC	220 VAC	12/24 VDC	110 VAC	220 VAC	24 VDC
Load current		5 to 50 mA	7 to 20 mA	7 to 10 mA	20 to 200 mA	10 to 200 mA	50 mA or less	20 mA or less	10 mA or less	5 to 50 mA
Indicator		LED (Lit when ON)			Neon lamp (Lit when OFF)		No indicator lamp			LED (Lit when ON)
Leakage current		0 mA			1 mA or less		0 mA			0.1 mA or less
Weightg	Grommet	1 m:42 3 m:100 5 m:158								
	Terminal box	68								

● Strong magnetic field

Item	Reed 2-wire	
	H0	
Applications	For relay, programmable controller	
Load voltage	12/24 VDC	110 VAC
Load current	5 to 50 mA	7 to 20 mA
Indicator	Green LED (Lit when ON)	
Leakage current	10 μA or less	
Weight g	1 m:76 3 m:181 5 m:289	

*1: Refer to Ending Page 1 for detailed switch specifications and dimensions.

Cylinder weight

(Unit: kg)

Bore size (mm)	Product weight when at 0 mm stroke				Switch weight	Mounting bracket weight		Additional weight per 100 mm cylinder stroke	Additional weight per 10 mm booster stroke	Additional weight of F type
	Basic (00)	Axial foot (LB)	Flange (FA)	Trunnion (TA)		R type	H type			
ø40	3.37	4.14	5.22	4.73	Refer to the weight in the switch specifications.	0.023	0.028	0.43	0.15	0.16
ø50	5.17	6.09	7.82	7.69		0.021	0.026	0.48	0.15	0.28
ø63	7.35	8.95	10.40	10.85		0.019	0.024	0.59	0.27	0.30
ø80	13.93	17.23	20.65	20.43		0.025	0.029	0.96	0.36	0.50
ø100	21.76	28.13	34.36	33.56		0.023	0.028	0.93	0.65	0.49

Formula for product weight
(Example) SHC-K-LB-40H-200-20-R0-D-F

- ● Product weight at 0 mm stroke.....4.14 kg
- ● Additional weight per 200 mm stroke .....$0.43 \times \frac{200}{100}$=0.86 kg
- ● Additional weight per 20 mm booster stroke .....$0.15 \times \frac{20}{10}$=0.30 kg
- ● Additional weight of F type .....0.16 kg
- ● Weight of two RO switches .....0.042x2=0.084 kg
- ● Weight of 2 mounting brackets.....0.023x2=0.046 kg
- ● Product weight.....4.14+0.86+0.30+0.16+0.084+0.046=5.590 kg

LCM
LCR
LCG
LCW
LCX
STM
STG
STS/STL
STR2
UCA2
ULK*
JSK/M2
JSG
JSC3/JSC4
USSD
UFCD
USC
UB
JSB3
LMB
LML
HCM
HCA
LBC
CAC4
UCAC2
CAC-N
UCAC-N
RCS2
RCC2
PCC
SHC
MCP
GLC
MFC
BBS
RRC
GRC
RV3*
NHS
HRL
LN
Hand
Chuk
MecHnd/Chuk
ShkAbs
FJ
FK
SpdContr
Ending

● Without switch (built-in magnet for switch)

SHC-K — LB - 40 H - 100 - 20 — S I

● R type with switch (built-in magnet for switch)

SHC-K — LB - 40 H - 100 - 20 - R0 - R - S I

● With strong magnetic field proof switch (H0, H0Y) (built-in magnet for switch)

SHC-K-L2 - LB - 40 H - 100 - 20 - H0 - R - S I

Ⓐ Mounting *2 *3

Ⓑ Bore size

Ⓒ Cushion

Ⓓ Stroke *4

Ⓔ Booster stroke

Ⓕ Switch model No. * indicates the lead wire length.

Ⓖ Switch quantity *6

Ⓗ Option *7 *8

Ⓘ Accessory

Code	Description
Ⓐ Mounting	
LB	Axial foot
FA	Rod side flange
TA	Rod side trunnion
Ⓑ Bore size (mm)	
40	ø40
50	ø50
63	ø63
80	ø80
100	ø100
Ⓒ Cushion	
H	Head side cushioned
N	Without cushion

Ⓓ Stroke (mm)

Bore size	Stroke *5	Custom stroke
ø40	40 to 700	In 5 mm increments
ø50	40 to 700	
ø63	40 to 800	
ø80	40 to 900	
ø100	40 to 1000	

Ⓔ Booster stroke (mm)	
10	10
20	20

Ⓕ Switch model No.

Grommet	Terminal box	Contact	Voltage AC	Voltage DC	Indicator	Lead wire
R1*	R1B	Proximity	●		1-color LED	2-wire
R2*	R2B			●		
R2Y*	R2YB			●	2-color LED	
R3*	R3B			●	1-color LED	3-wire
R3Y*	R3YB			●	2-color LED	
R0*	R0B	Reed	●	●	1-color LED	2-wire
R4*	R4B		●			
R5*	R5B		●	●	No indicator lamp	
R6*	R6B			●	1-color LED	
H0*	-		●	●	Strong magn field proof SW	2-wire

*** Lead wire length**	
Blank	1 m (standard)
3	3 m (option)
5	5 m (option)

Ⓖ Switch quantity	
R	1 on rod side
H	1 on head side
D	2
T	3
4	4
5	5

Ⓗ Option

		Max. ambient temperature	Instantaneous max. temp
J	Bellows	100°C	200°C
L	Bellows	250°C	400°C
Blank	Rod end form/male thread (standard)		
F	Rod end form/flange		
Blank	Piping port position, top from rod side (standard)		
R	Piping port position, right from rod side		
S	Piping port position, bottom from rod side		
T	Piping port position, left from rod side		
G1	Metal scraper		
P6	Copper and PTFE free		
A	Booster single control port		

Ⓘ Accessory	
I	Rod eye
Y	Rod clevis (pin and snap ring attached)
B12	Eye bracket (for rod eye)
B22	Clevis bracket (for rod eye) (pin and snap ring attached)

⚠ Precautions for model No. selection

*1 : Mounting bracket will be shipped assembled with the product.
*2 : In the case of TA (rod side trunnion), since the trunnion mounting position is placed at the moving part of the stroke projection or booster section return, the position of the stroke projection of the cylinder switch and the booster section return cannot be detected.
*3 : For TA (rod side trunnion) and TB (head side trunnion), piping port position cannot be specified on the trunnion shaft projecting surface.
*4 : For the stroke indicated in Item ⒹStroke, indicate the full stroke (movement stroke + booster stroke).
*5 : Refer to page 1154 for the min. stroke with switch.
*6 : When selecting TA or TB as mounting, the number of switches is limited to "H" (1 on head side) for TA, and "R" (1 on rod side) for TB.
*7 : L (bellows (for max. ambient temperature 100°C)) is available as a made-to-order product.
*8 : Booster cylinder can be individually controlled. In this case, select option A (booster single control port).

[Example of model No.]

SHC-K-LB-40H-100-20-R0-R-SI

Model No.: High power cylinder Double acting/quad force

Ⓐ Mounting : Axial foot
Ⓑ Bore size : ø40 mm
Ⓒ Cushion : Head side cushioned
Ⓓ Stroke : 100 mm
(movement stroke 80 mm + booster stroke 20 mm)
Ⓔ Booster stroke : 20 mm
Ⓕ Switch model No. : Reed R0 switch, lead wire 1 m
Ⓖ Switch quantity : 1 on rod side
Ⓗ Option : Piping port position, bottom from rod side
Ⓘ Accessory : Rod eye

LCM
LCR
LCG
LCW
LCX
STM
STG
STS/STL
STR2
UCA2
ULK*
JSK/M2
JSG
JSC3/JSC4
USSD
UFCD
USC
UB
JSB3
LMB
LML
HCM
HCA
LBC
CAC4
UCAC2
CAC-N
UCAC-N
RCS2
RCC2
PCC
SHC
MCP
GLC
MFC
BBS
RRC
GRC
RV3*
NHS
HRL
LN
Hand
Chuk
MecHnd/Chuk
ShkAbs
FJ
FK
SpdContr
Ending

How to order R-switch

A) Switch body + mounting bracket

SHC - R0* - 40

Switch model No. (Item Ⓕ on page 1156)

Bore size (Item Ⓑ on page 1156)

B) Switch body only

SW - R0*

Switch model No. (Item Ⓕ on page 1156)

C) Mounting bracket set

SHC - R - 40

Bore size (Item Ⓑ on page 1156)

● Terminal box only

·For R□B

SW - RB

How to order H-switch

A) Switch body + mounting bracket set

SHC-L2 - H0 - 40

Switch model No. (Item Ⓕ on page 1156)

Bore size (Item Ⓑ on page 1156)

B) Switch body only

SW - H0

Switch model No. (Item Ⓕ on page 1156)

C) Mounting bracket set

SHC-L2 - H - 40

Bore size (Item Ⓑ on page 1156)

How to order mounting bracket

Bore size (mm) / Mounting bracket	ø40	ø50
Rod side flange (FA)	SHC-K-FA-40	SHC-K-FA-50

*1: Order for mounting bracket only is not possible for ø63 to ø100.

Theoretical thrust table

(Unit: N)

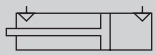

Bore size (mm)	Operating direction	Piston position	Working pressure MPa 0.2	0.3	0.4	0.5	0.6	0.7	0.8	0.9
ø40	Push	Thrust	2.51×10^{2}	3.76×10^{2}	5.02×10^{2}	6.28×10^{2}	7.53×10^{2}	8.79×10^{2}	1.0×10^{3}	1.13×10^{3}
		Booster section	1.13×10^{3}	1.70×10^{3}	2.27×10^{3}	2.83×10^{3}	3.40×10^{3}	3.97×10^{3}	4.53×10^{3}	5.10×10^{3}
	Pull	Thrust	1.28×10^{2}	1.92×10^{2}	2.56×10^{2}	3.20×10^{2}	3.84×10^{2}	4.48×10^{2}	5.12×10^{2}	5.76×10^{2}
		Booster section	1.01×10^{3}	1.52×10^{3}	2.02×10^{3}	2.53×10^{3}	3.03×10^{3}	3.54×10^{3}	4.04×10^{3}	4.55×10^{3}
ø50	Push	Thrust	3.92×10^{2}	5.88×10^{2}	7.85×10^{2}	9.81×10^{2}	1.18×10^{3}	1.37×10^{3}	1.57×10^{3}	1.77×10^{3}
		Booster section	1.80×10^{3}	2.70×10^{3}	3.60×10^{3}	4.51×10^{3}	5.41×10^{3}	6.31×10^{3}	7.21×10^{3}	8.11×10^{3}
	Pull	Thrust	2.31×10^{2}	3.47×10^{2}	4.63×10^{2}	5.79×10^{2}	6.95×10^{2}	8.11×10^{2}	9.27×10^{2}	1.04×10^{3}
		Booster section	1.64×10^{3}	2.46×10^{3}	3.28×10^{3}	4.10×10^{3}	4.92×10^{3}	5.75×10^{3}	6.57×10^{3}	7.39×10^{3}
ø63	Push	Thrust	6.23×10^{2}	9.35×10^{2}	1.25×10^{3}	1.56×10^{3}	1.87×10^{3}	2.18×10^{3}	2.49×10^{3}	2.81×10^{3}
		Booster section	2.83×10^{3}	4.24×10^{3}	5.65×10^{3}	7.07×10^{3}	8.48×10^{3}	9.89×10^{3}	1.13×10^{4}	1.27×10^{4}
	Pull	Thrust	3.72×10^{2}	5.58×10^{2}	7.44×10^{2}	9.30×10^{2}	1.12×10^{3}	1.30×10^{3}	1.49×10^{3}	1.67×10^{3}
		Booster section	2.58×10^{3}	3.86×10^{3}	5.15×10^{3}	6.44×10^{3}	7.73×10^{3}	9.01×10^{3}	1.03×10^{4}	1.16×10^{4}
ø80	Push	Thrust	1.01×10^{3}	1.51×10^{3}	2.01×10^{3}	2.51×10^{3}	3.02×10^{3}	3.52×10^{3}	4.02×10^{3}	4.52×10^{3}
		Booster section	4.63×10^{3}	6.95×10^{3}	9.27×10^{3}	1.16×10^{4}	1.39×10^{4}	1.62×10^{4}	1.85×10^{4}	2.09×10^{4}
	Pull	Thrust	6.12×10^{2}	9.18×10^{2}	1.23×10^{3}	1.53×10^{3}	1.84×10^{3}	2.14×10^{3}	2.45×10^{3}	2.76×10^{3}
		Booster section	4.24×10^{3}	6.36×10^{3}	8.48×10^{3}	1.06×10^{4}	1.27×10^{4}	1.48×10^{4}	1.70×10^{4}	1.91×10^{4}
ø100	Push	Thrust	1.57×10^{3}	2.36×10^{3}	3.14×10^{3}	3.93×10^{3}	4.71×10^{3}	5.50×10^{3}	6.28×10^{3}	7.07×10^{3}
		Booster section	7.29×10^{3}	1.09×10^{4}	1.46×10^{4}	1.82×10^{4}	2.19×10^{4}	2.55×10^{4}	2.91×10^{4}	3.28×10^{4}
	Pull	Thrust	1.01×10^{3}	1.51×10^{3}	2.01×10^{3}	2.51×10^{3}	3.02×10^{3}	3.52×10^{3}	4.02×10^{3}	4.52×10^{3}
		Booster section	6.72×10^{3}	1.01×10^{4}	1.34×10^{4}	1.68×10^{4}	2.02×10^{4}	2.35×10^{4}	2.69×10^{4}	3.02×10^{4}

Note: When the booster section is pulled (backward), due to product structure, theoretical thrust is reduced to approximately 70% when the connection is released.

LCM
LCR
LCG
LCW
LCX
STM
STG
STS/STL
STR2
UCA2
ULK*
JSK/M2
JSG
JSC3/JSC4
USSD
UFCD
USC
UB
JSB3
LMB
LML
HCM
HCA
LBC
CAC4
UCAC2
CAC-N
UCAC-N
RCS2
RCC2
PCC
SHC
MCP
GLC
MFC
BBS
RRC
GRC
RV3*
NHS
HRL
LN
Hand
Chuk
MecHnd/Chuk
ShkAbs
FJ
FK
SpdContr
Ending

Internal structure and parts list (ø40, ø50)

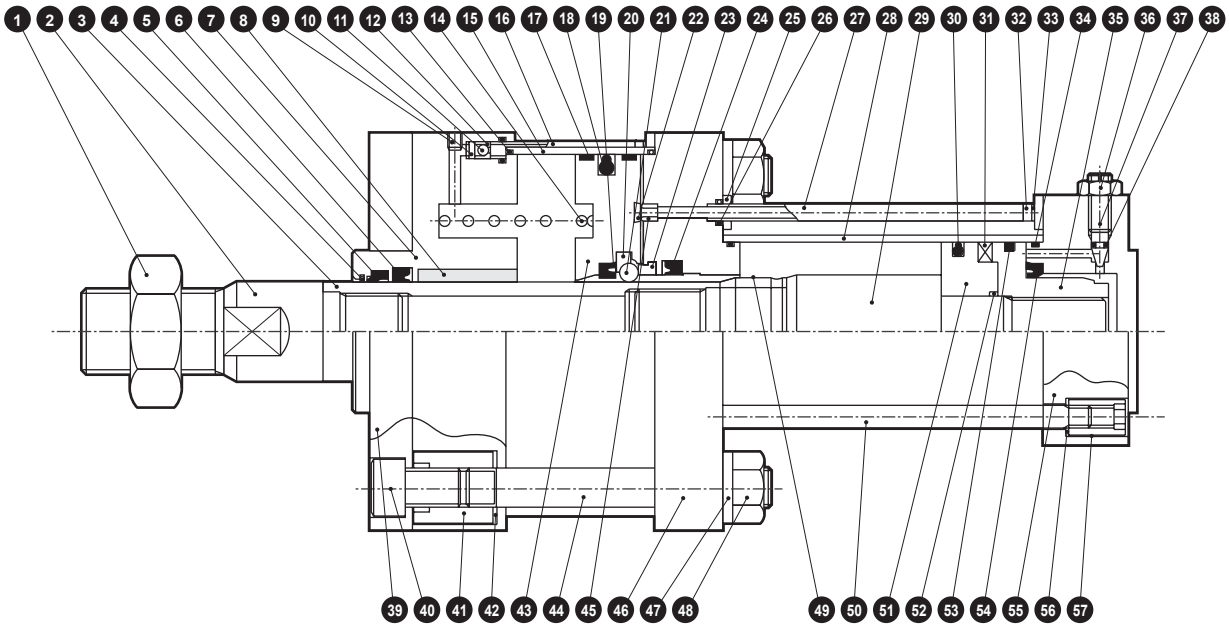

Cannot be disassembled

No.	Part name	Material	Remarks	No.	Part name	Material	Remarks
1	Rod nut	Steel	Zinc chromate	30	Piston packing (2)	Nitrile rubber	
2	Cap	Steel	Manganese phosphate	31	Magnet	Plastic	
3	Piston rod	Steel	Industrial chrome plating	32	Hexagon socket head cap screw	Alloy steel	Black finish
4	Metal scraper	Copper alloy	G1 type only	33	Spring washer	Steel	Black finish
5	Dust wiper	Nitrile rubber		34	Cylinder gasket (2)	Nitrile rubber	
6	Rod packing (1)	Nitrile rubber		35	Piston (H)	Aluminum alloy	
7	Rod cover	Aluminum alloy	Black alumite	36	Needle nut	Copper alloy	Zinc chromate
8	Bush	Copper alloy casting	Oil impregnation	37	Cushion needle	Copper alloy	
9	Hexagon socket set screw	Alloy steel	Black finish	38	Needle gasket	Nitrile rubber	
10	Spring pin	Steel		39	FA flange	Steel	Paint
11	Check ball	Alloy steel		40	Hexagon socket head cap screw	Alloy steel	Black finish
12	Fixed orifice	Copper alloy		41	Round nut (1)	Steel	Zinc chromate
13	Cylinder gasket (1)	Nitrile rubber		42	Conical spring washer (1)	Steel	Black finish
14	Compression spring	Steel	Electrodeposition	43	Booster piston	Alloy steel	
15	Booster pipe	Aluminum alloy	Hard alumite	44	Tie rod (1)	Steel	Zinc chromate
16	Pass-pipe (1)	Stainless steel		45	Valve seat	Copper alloy	
17	Wear ring (1)	Polyacetal		46	Intermediate cover	Aluminum alloy	Black alumite
18	Piston packing (1)	Nitrile rubber		47	Toothed washer	Steel	Zinc chromate
19	Cushion packing (1)	Nitrile rubber		48	Hexagon nut	Steel	Zinc chromate
20	Steel ball bearing	Nitrile rubber		49	Connection collar	Alloy steel	
21	Steel ball	Alloy steel		50	Tie rod (2)	Steel	Zinc chromate
22	Seal cushion	Nitrile rubber		51	Piston (R)	Aluminum alloy	
23	Ball stopper	Steel		52	Piston gasket	Nitrile rubber	
24	Rod packing (2)	Nitrile rubber		53	Wear ring (2)	Polyacetal	
25	Packing holder	Steel	Manganese phosphate	54	Cushion packing (2)	Nitrile rubber	
26	Pass-pipe gasket	Nitrile rubber		55	Head cover	Aluminum alloy	Black alumite
27	Pass-pipe (2)	Stainless steel		56	Conical spring washer	Steel	Black finish
28	Cylinder tube	Aluminum alloy	Hard alumite	57	Round nut (2)	Steel	Zinc chromate
29	Connection piston	Steel	Industrial chrome plating				

Note: This product cannot be disassembled.

Internal structure and parts list (ø63 to ø100)

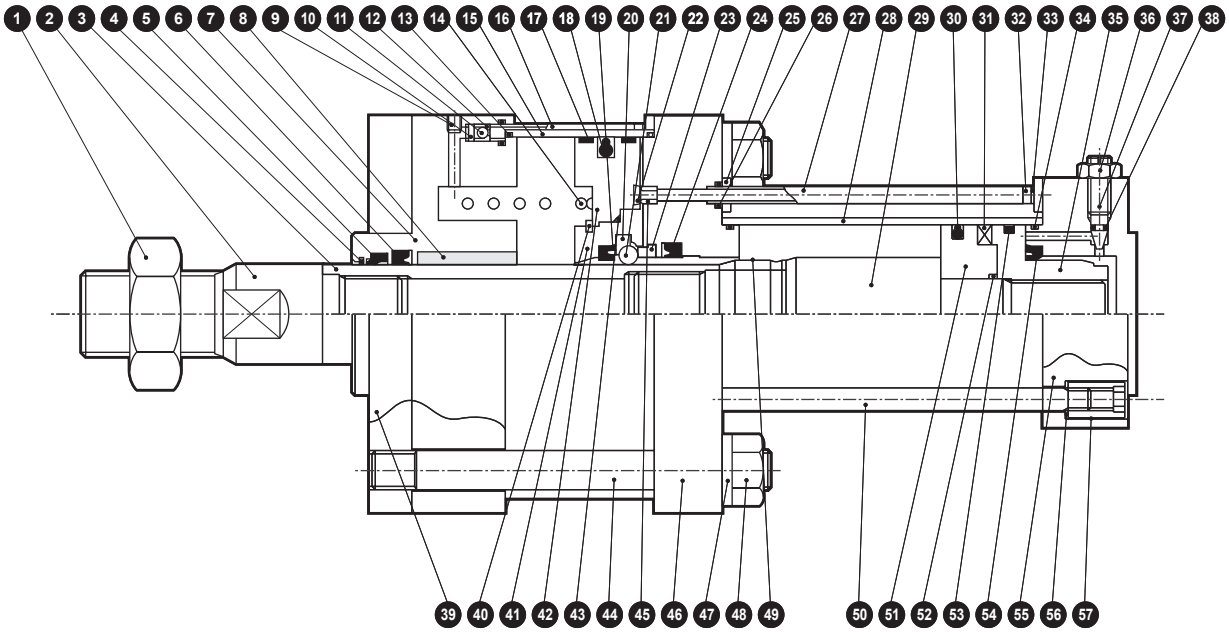

Cannot be disassembled

No.	Part name	Material	Remarks	No.	Part name	Material	Remarks
1	Rod nut	Steel	Zinc chromate	30	Piston packing (2)	Nitrile rubber	
2	Cap	Steel	Manganese phosphate	31	Magnet	Plastic	
3	Piston rod	Steel	Industrial chrome plating	32	Hexagon socket head cap screw	Steel	Black finish
4	Metal scraper	Copper alloy	G1 type only	33	Spring washer	Steel	Black finish
5	Dust wiper	Nitrile rubber		34	Cylinder gasket (2)	Nitrile rubber	
6	Rod packing (1)	Nitrile rubber		35	Piston (H)	Aluminum alloy	
7	Rod cover	Aluminum alloy	Black alumite	36	Needle nut	Copper alloy	Zinc chromate
8	Bush	Copper alloy casting	Oil impregnation	37	Cushion needle	Copper alloy	
9	Hexagon socket set screw	Alloy steel	Black finish	38	Needle gasket	Nitrile rubber	
10	Spring pin	Steel		39	FA flange	Steel	Electrodeposition
11	Check ball	Alloy steel		40	C-snap ring	Steel	
12	Fixed orifice	Copper alloy		41	Booster piston (A)	Alloy steel	
13	Cylinder gasket (1)	Nitrile rubber		42	Booster piston (B)	Steel	Zinc chromate
14	Compression spring	Steel	Electrodeposition	43	Gasket	Nitrile rubber	
15	Booster pipe	Aluminum alloy	Hard alumite	44	Tie rod (1)	Steel	Zinc chromate
16	Pass-pipe (1)	Stainless steel		45	Valve seat	Copper alloy	
17	Wear ring (1)	Polyacetal		46	Intermediate cover	Aluminum alloy	Black alumite
18	Piston packing (1)	Nitrile rubber		47	Toothed washer	Steel	Zinc chromate
19	Cushion packing (1)	Nitrile rubber		48	Hexagon nut	Steel	Zinc chromate
20	Steel ball bearing	Nitrile rubber		49	Connection collar	Alloy steel	
21	Steel ball	Alloy steel		50	Tie rod (2)	Steel	Zinc chromate
22	Seal cushion	Urethane rubber		51	Piston (R)	Aluminum alloy	
23	Ball stopper	Steel		52	Piston gasket	Nitrile rubber	
24	Rod packing (2)	Nitrile rubber		53	Wear ring (2)	Polyacetal	
25	Packing holder	Steel	Manganese phosphate	54	Cushion packing (2)	Nitrile rubber	
26	Pass-pipe gasket	Nitrile rubber		55	Head cover	Aluminum alloy	Black alumite
27	Pass-pipe (2)	Stainless steel		56	Conical spring washer	Steel	Black finish
28	Cylinder tube	Aluminum alloy	Hard alumite	57	Round nut	Steel	Zinc chromate
29	Connection piston	Steel	Industrial chrome plating				

Note: This product cannot be disassembled.

LCM
LCR
LCG
LCW
LCX
STM
STG
STS/STL
STR2
UCA2
ULK*
JSK/M2
JSG
JSC3/JSC4
USSD
UFCD
USC
UB
JSB3
LMB
LML
HCM
HCA
LBC
CAC4
UCAC2
CAC-N
UCAC-N
RCS2
RCC2
PCC
SHC
MCP
GLC
MFC
BBS
RRC
GRC
RV3*
NHS
HRL
LN
Hand
Chuk
MecHnd/Chuk
ShkAbs
FJ
FK
SpdContr
Ending

Dimensions [axial foot (LB), rod side flange (FA)]

CAD

● Axial foot (LB)

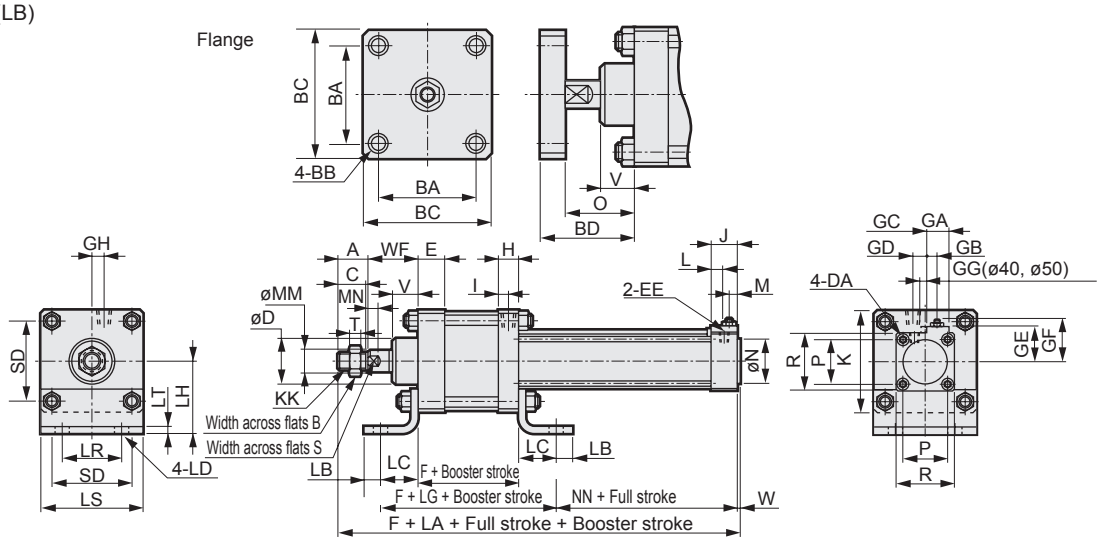

*1 : GG dimension applies to ø40 and ø50.
*2 : For dimensions with bellows, refer to page 1162.
*3 : For the dimensions of the accessories, refer to page 1163.

Bore size (mm)	A	B	BA	BB	BC	BD	C	D	DA	E	EE	F	GA	GB	GC	GD	GE	GF	GH	H	I	J	K	KK
ø40	36	32	50	M12	74	68	34	ø43	M8	35	Rc1/8	84.5	26	4	-	8.5	36.5	47.5	12	18	10	26	98	M22x1.5
ø50	45	41	60	M12	90	75	43	ø51	M8	36	Rc1/4	90.5	30	2	-	10	43	53.5	16	22	11.5	32	118	M26x1.5
ø63	50	46	80	M14	110	74	47	ø57	M8	33	Rc1/4	90	32	9	1	13	48	58	13	24	13	30	140	M30x1.5
ø80	56	55	110	M16	142	89	53	ø62.5	M12	34	Rc3/8	105	38	8	1	16	59	69	15	28	15	34	177	M36x1.5
ø100	72	70	130	M20	175	100	69	ø75	M12	37	Rc3/8	110.5	41	12.5	5	20	71	81	20	26	13	37	220	M45x1.5

Bore size (mm)	L	LA	LB	LC	LD	LG	LH	LR	LS	LT	M	MM	MN	N	NN	O	P	S	SD	T	V	W	WF	GG	R
ø40	7	151.5	14	37	14	74	60	74	98	6	8	ø25	14	ø31	28.5	52	40.5	23	74	13	24	2	48	20	57
ø50	9	173.5	21	31	14	62	67	80	118	6	9	ø30	17	ø38	42.5	54	48	26	90	16	24	2	53	20	69
ø63	15	189	20	45	19	90	85	100	140	7	10	ø35	20	ø38	28	53	59	31	110	18	21	3	63	-	80
ø80	17	215.5	20	53	19	106	106	118	177	10	11	ø40	26	ø43	34.5	64	74	36	142	21	24	2	70	-	98
ø100	22	257	27	62	24	124	132	150	220	12	15	ø50	26	ø51	34	71	90	46	175	27	30	2	87	-	118

● Rod side flange (FA)

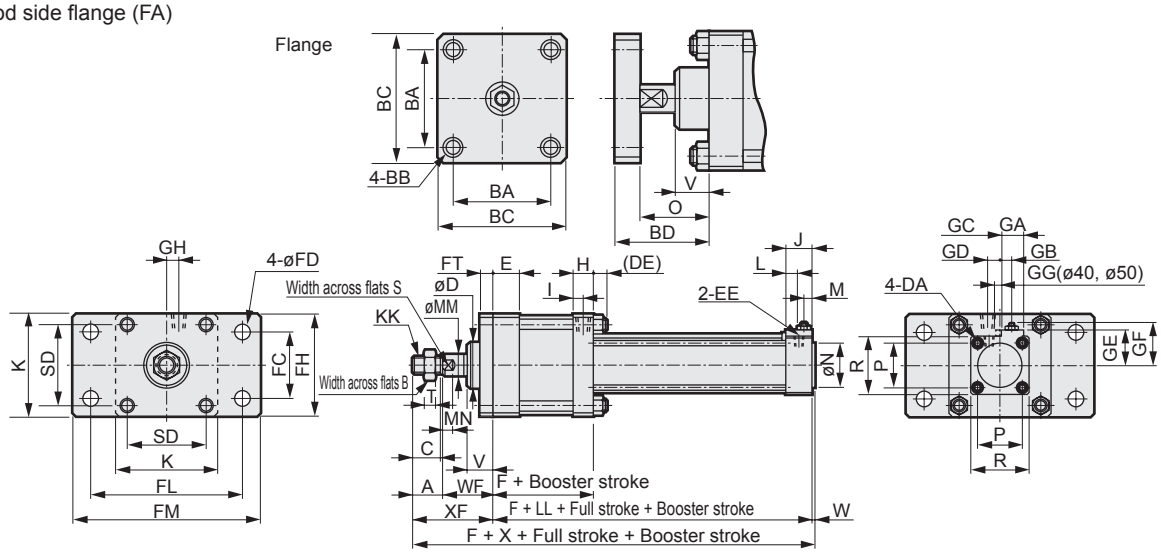

*1 : GG dimension applies to ø40 and ø50.
*2 : For dimensions with bellows, refer to page 1162.
*3 : For the dimensions of the accessories, refer to page 1163.

Bore size (mm)	A	B	BA	BB	BC	BD	C	D	DA	DE	E	EE	F	FC	FD	FH	FL	FM	FT	GA	GB	GC	GD	GE	GF
ø40	36	32	50	M12	74	68	34	ø43	M8	-	35	Rc1/8	84.5	74	14	98	125	153	19	26	4	-	8.5	36.5	47.5
ø50	45	41	60	M12	90	75	43	ø51	M8	-	36	Rc1/4	90.5	88	14	118	144	180	19	30	2	-	10	43	53.5
ø63	50	46	80	M14	110	74	47	ø57	M8	18	33	Rc1/4	90	100	19	140	190	230	14	32	9	1	13	48	58
ø80	56	55	110	M16	142	89	53	ø62.5	M12	20	34	Rc3/8	105	118	19	177	236	280	19	38	8	1	16	59	69
ø100	72	70	130	M20	175	100	69	ø75	M12	24	37	Rc3/8	110.5	150	24	220	280	330	25	41	12.5	5	20	71	81

Bore size (mm)	GH	H	I	J	K	KK	L	LL	M	MM	MN	N	O	P	R	S	SD	T	V	W	WF	X	XF	GG
ø40	12	18	10	26	98	M22x1.5	7	65.5	8	ø25	14	ø31	52	40.5	57	23	74	13	24	2	48	151.5	84	20
ø50	16	22	11.5	32	118	M26x1.5	9	73.5	9	ø30	17	ø38	54	48	69	26	90	16	24	2	53	173.5	98	20
ø63	13	24	13	30	140	M30x1.5	15	73	10	ø35	20	ø38	53	59	80	31	110	18	21	3	63	189	113	-
ø80	15	28	15	34	177	M36x1.5	17	87.5	11	ø40	26	ø43	64	74	98	36	142	21	24	2	70	215.5	126	-
ø100	20	26	13	37	220	M45x1.5	22	96	15	ø50	26	ø51	71	90	118	46	175	27	30	2	87	257	159	-

Dimensions [rod side trunnion (TA)]

CAD

● Rod side trunnion (TA)

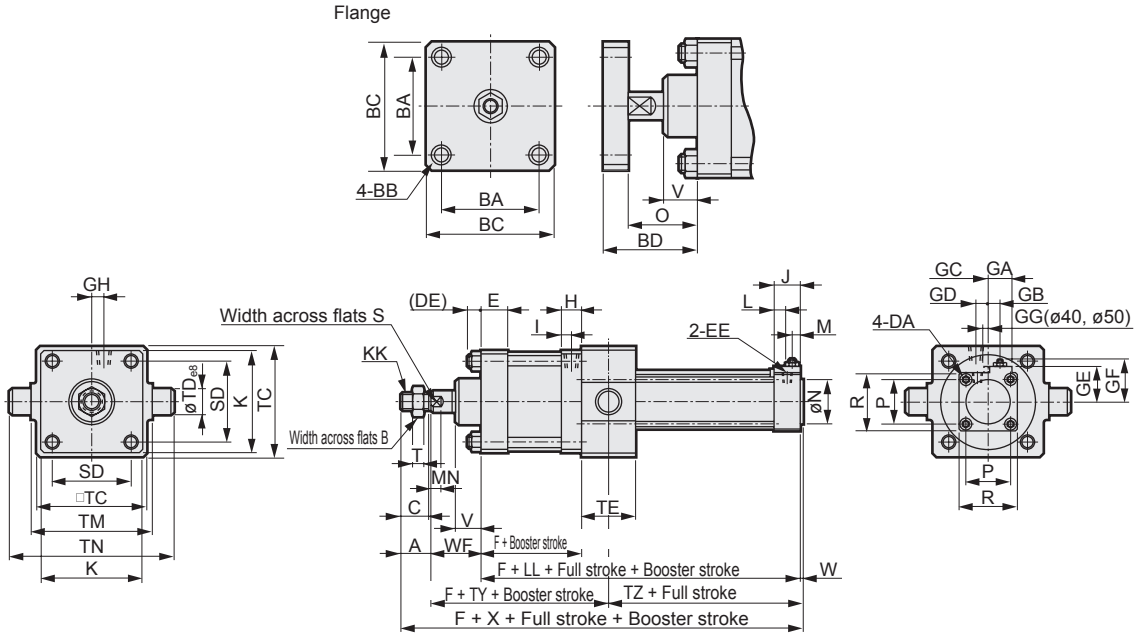

*1 : GG dimension applies to ø40 and ø50.
*2 : Since it would hit the trunnion, a switch cannot be installed at the forward end.
*3 : A piping port cannot be attached on the side where the trunnion shaft is protruding out.
*4 : For dimensions with bellows, refer to page 1162.
*5 : For the dimensions of the accessories, refer to page 1163.

Bore size (mm)	A	B	BA	BB	BC	BD	C	D	DA	DE	E	EE	F	GA	GB	GC	GD	GE	GF	GH	H	I	J	K
ø40	36	32	50	M12	74	68	34	ø43	M8	-	35	Rc1/8	84.5	26	4	-	8.5	36.5	47.5	12	18	10	26	98
ø50	45	41	60	M12	90	75	43	ø51	M8	-	36	Rc1/4	90.5	30	2	-	10	43	53.5	16	22	11.5	32	118
ø63	50	46	80	M14	110	74	47	ø57	M8	18	33	Rc1/4	90	32	9	1	13	48	58	13	24	13	30	140
ø80	56	55	110	M16	142	89	53	ø62.5	M12	20	34	Rc3/8	105	38	8	1	16	59	69	15	28	15	34	177
ø100	72	70	130	M20	175	100	69	ø75	M12	24	37	Rc3/8	110.5	41	12.5	5	20	71	81	20	26	13	37	220

Bore size (mm)	KK	L	LL	M	MM	MN	N	O	P	R	S	SD	T	TC	TD	TE	TM	TN	TY	TZ	V	W	WF	X	GG
ø40	M22x1.5	7	65.5	8	ø25	14	ø31	52	40.5	57	23	74	13	100	25	40	115	165	68	47.5	24	2	48	151.5	20
ø50	M26x1.5	9	73.5	9	ø30	17	ø38	54	48	69	26	90	16	121	35	50	135	205	78	50.5	24	2	53	173.5	20
ø63	M30x1.5	15	73	10	ø35	20	ø38	53	59	80	31	110	18	150	32	50	170	234	88	51	21	3	63	189	-
ø80	M36x1.5	17	87.5	11	ø40	26	ø43	64	74	98	36	142	21	190	40	60	212	292	100	59.5	24	2	70	215.5	-
ø100	M45x1.5	22	96	15	ø50	26	ø51	71	90	118	46	175	27	242	45	70	265	355	122	63	30	2	87	257	-

LCM
LCR
LCG
LCW
LCX
STM
STG
STS/STL
STR2
UCA2
ULK*
JSK/M2
JSG
JSC3/JSC4
USSD
UFCD
USC
UB
JSB3
LMB
LML
HCM
HCA
LBC
CAC4
UCAC2
CAC-N
UCAC-N
RCS2
RCC2
PCC
SHC
MCP
GLC
MFC
BBS
RRC
GRC
RV3*
NHS
HRL
LN
Hand
Chuk
MecHnd/Chuk
ShkAbs
FJ
FK
SpdContr
Ending

Booster single control port position dimensions (option)

● SHC (double force)

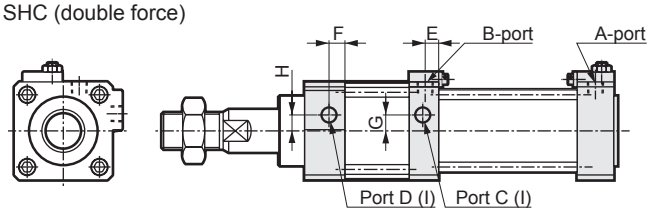

Bore size (mm)	E	F	G	H	2-I
ø40	10	11	10	2	Rc1/8
ø50	11	13	13	5	Rc1/4
ø63	13	17.5	14	9.5	Rc1/4
ø80	14	17	18	12	Rc3/8
ø100	13	19	26	15	Rc3/8

● SHC-TA (rod side trunnion)

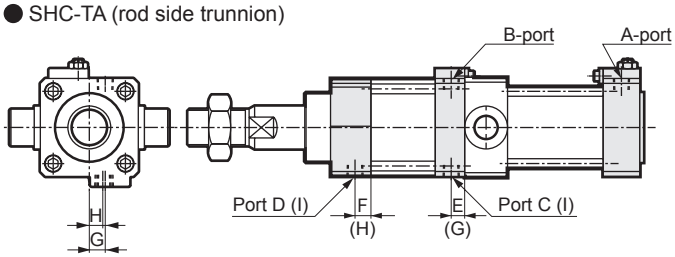

● SHC-FA (rod side flange)

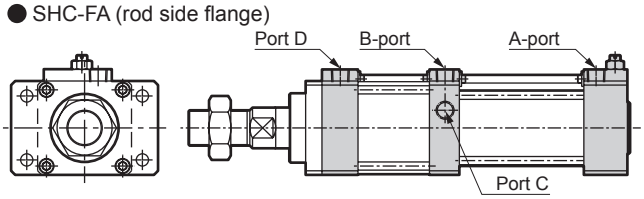

● SHC-K (quad force)

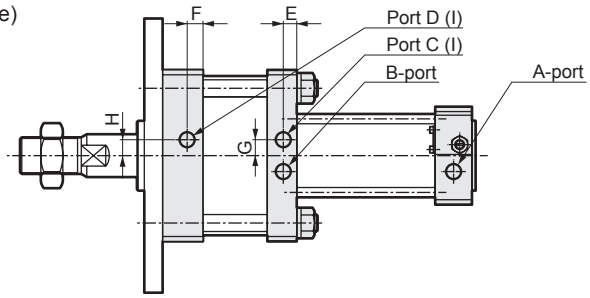

Bore size (mm)	E	F	G	H	2-I
ø40	8	10	6	6	Rc1/8
ø50	10.5	11	6	6	Rc1/4
ø63	13	13	13	13	Rc1/4
ø80	14	14	14	14	Rc3/8
ø100	13	13	21	42	Rc3/8

Dimensions with bellows (common to SHC and SHC-K)

● Standard

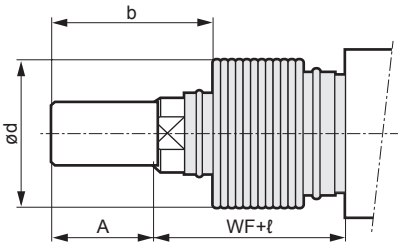

● Rod end flange

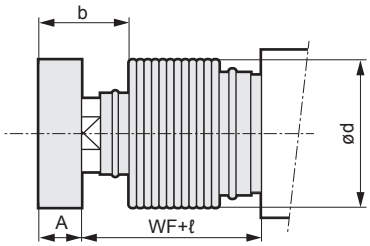

● SHC

Bore size (mm)	A	b	d	WF
ø40	36	51.5	53	42
ø50	45	65	61	47
ø63	50	80	75	55.5
ø80	56	88	80	61
ø100	72	108	95	71

Bore size (mm)	ℓ							
ø40	50 or less	51 to 100	101 to 150	151 to 200	201 to 300	301 to 400	401 to 500	501 or more
	14	26	38	49	72	96	119	(Full stroke/4.3) + 2.5
ø50	50 or less	51 to 100	101 to 150	151 to 200	201 to 300	301 to 400	401 to 500	501 or more
	20	32	42	53	76	98	120	(Full stroke/4.5) + 9
ø63	(Full stroke/4.55) + 11							
ø80	(Full stroke/5.15) + 9							
ø100	(Full stroke/5.3) + 9							

● SHC

Bore size (mm)	A	b	d	WF
ø40	16	35.5	53	46
ø50	21	42	61	48
ø63	21	41	75	45.5
ø80	25	51	80	56
ø100	29	49	95	55

Bore size (mm)	ℓ							
ø40	50 or less	51 to 100	101 to 150	151 to 200	201 to 300	301 to 400	401 to 500	501 or more
	14	26	38	49	72	96	119	(Full stroke/4.3) + 2.5
ø50	50 or less	51 to 100	101 to 150	151 to 200	201 to 300	301 to 400	401 to 500	501 or more
	20	32	42	53	76	98	120	(Full stroke/4.5) + 9
ø63	(Full stroke/4.55) + 11							
ø80	(Full stroke/5.15) + 9							
ø100	(Full stroke/5.3) + 9							

● SHC-K

Bore size (mm)	A	b	d	WF
ø40	36	51.5	53	42
ø50	45	65	61	47
ø63	50	80	75	55.5
ø80	56	88	80	61
ø100	72	108	95	71

Bore size (mm)	ℓ							
ø40	50 or less	51 to 100	101 to 150	151 to 200	201 to 300	301 to 400	401 to 500	501 or more
	14	26	38	49	72	96	119	(Full stroke/4.3) + 2.5
ø50	50 or less	51 to 100	101 to 150	151 to 200	201 to 300	301 to 400	401 to 500	501 or more
	20	32	42	53	76	98	120	(Full stroke/4.5) + 9
ø63	(Full stroke/4.55) + 11							
ø80	(Full stroke/5.15) + 9							
ø100	(Full stroke/5.3) + 9							

● SHC-K

Bore size (mm)	A	b	d	WF
ø40	16	35.5	53	46
ø50	21	42	61	48
ø63	21	41	75	45.5
ø80	25	51	80	56
ø100	29	49	95	55

Bore size (mm)	ℓ							
ø40	50 or less	51 to 100	101 to 150	151 to 200	201 to 300	301 to 400	401 to 500	501 or more
	14	26	38	49	72	96	119	(Full stroke/4.3) + 2.5
ø50	50 or less	51 to 100	101 to 150	151 to 200	201 to 300	301 to 400	401 to 500	501 or more
	20	32	42	53	76	98	120	(Full stroke/4.5) + 9
ø63	(Full stroke/4.55) + 11							
ø80	(Full stroke/5.15) + 9							
ø100	(Full stroke/5.3) + 9							

Accessory dimensions (rod eye/clevis bracket/pin)

● Rod eye (I)

Material: Cast iron Painting

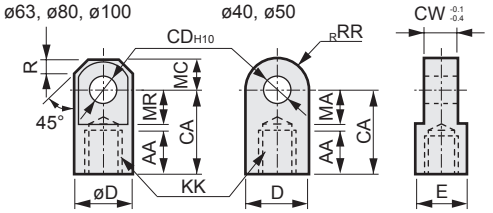

Model No.	Bore size (mm)	AA	CA	CD	CW	D	E	KK	MA	MC	R	RR	Weight (kg)
SHC-I-40	ø40	30	70	20	28	46	41	M22x1.5	30	-	-	25	0.83
SHC-I-50	ø50	30	70	20	28	46	41	M26x1.5	30	-	-	25	0.83
SHC-I-63	ø63	50	85	25	32	55	-	M30x1.5	32	27.5	15.5	-	1.2
SHC-I-80	ø80	60	105	32	40	70	-	M36x1.5	40	35	21	-	2.5
SHC-I-100	ø100	75	125	40	50	85	-	M45x1.5	47.5	42.5	29	-	4.2

● Rod clevis (Y)

Material: Cast iron Painting

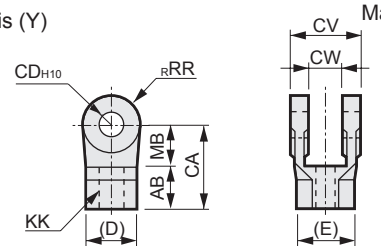

Model No.	Bore size (mm)	AB	CA	CD	CW	CV	D	E	KK	MB	RR	Weight (kg)
SHC-Y-40	ø40	35	70	20	28	56	41	47.3	M22x1.5	30	25	0.7
SHC-Y-50	ø50	35	70	20	28	56	41	47.3	M26x1.5	30	25	0.7
SHC-Y-63	ø63	50	85	25	32	64	46	53.1	M30x1.5	35	27.5	1
SHC-Y-80	ø80	60	105	32	40	80	55	63.5	M36x1.5	45	35	2
SHC-Y-100	ø100	75	125	40	50	100	70	80.8	M45x1.5	50	42.5	3.7

Note: A pin and a snap ring are attached.

A) Second bracket for clevis

● Eye bracket (B11)

Material: Cast iron Painting

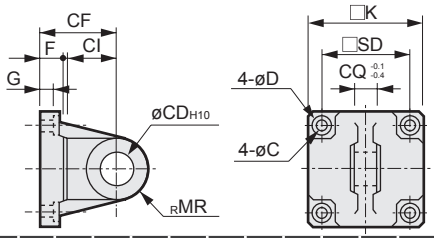

Model No.	Bore size (mm)	C	CD	CF	CI	CQ	D	F	G	K	MR	SD	Weight (kg)
SHC-B11-40	ø40	9	12	32	18	18	14	10	6.5	57	12	40.5	0.27
SHC-B11-50	ø50	9	12	32	18	18	14	10	6.5	66	12	48	0.33
SHC-B11-63	ø63	9	14	37	24	20	14	10	7.5	80	16	59	0.54
SHC-B11-80	ø80	14	20	52	30	28	20	14	10.5	98	20	74	1.3
SHC-B11-100	ø100	14	20	52	30	28	20	16	10.5	118	20	90	1.7

● Clevis bracket (B21)

Material: Cast iron Painting

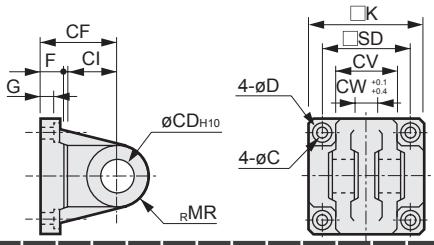

Model No.	Bore size (mm)	C	CD	CF	CI	CV	CW	D	F	G	K	MR	SD	Weight (kg)
SHC-B21-40	ø40	9	12	32	18	36	18	14	10	6.5	57	12	40.5	0.28
SHC-B21-50	ø50	9	12	32	18	36	18	14	10	6.5	66	12	48	0.33
SHC-B21-63	ø63	9	14	37	24	40	20	14	10	7.5	80	16	59	0.53
SHC-B21-80	ø80	14	20	52	30	56	28	20	14	10.5	98	20	74	1.3
SHC-B21-100	ø100	14	20	52	30	56	28	20	16	10.5	118	20	90	1.7

Note: A pin and a snap ring are attached.

B) Second bracket for rod eye

● Eye bracket (B12)

Material: Cast iron Painting

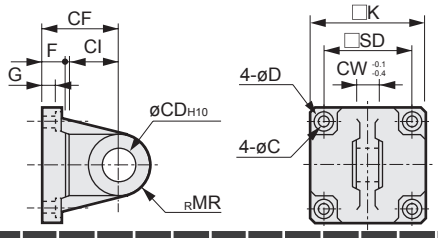

Model No.	Bore size (mm)	C	CD	CF	CI	CW	D	F	G	K	MR	SD	Weight (kg)
SHC-B12-40	ø40	14	20	52	30	28	20	14	10.5	98	20	74	1.3
SHC-B12-50	ø50	14	20	52	30	28	20	16	10.5	118	20	90	1.7
SHC-B12-63	ø63	16	25	63	35	32	23	20	18	140	25	110	2.3
SHC-B12-80	ø80	18	32	75	40	40	26	24	22	174	32	142	4.6
SHC-B12-100	ø100	22	40	90	55	50	32	30	28	220	40	175	8.9

● Clevis bracket (B22)

Material: Cast iron Painting

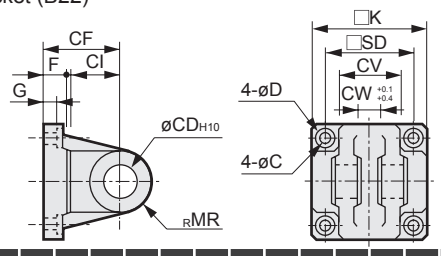

Model No.	Bore size (mm)	C	CD	CF	CI	CV	CW	D	F	G	K	MR	SD	Weight (kg)
SHC-B22-40	ø40	14	20	52	30	56	28	20	14	10.5	98	20	74	1.3
SHC-B22-50	ø50	14	20	52	30	56	28	20	16	10.5	118	20	90	1.7
SHC-B22-63	ø63	16	25	63	35	64	32	23	20	18	140	25	110	2.6
SHC-B22-80	ø80	18	32	75	40	80	40	26	24	22	174	32	142	5
SHC-B22-100	ø100	22	40	90	55	100	50	32	30	28	220	40	175	9.2

Note: A pin and a snap ring are attached.

Clevis pin

● Pin (P)

Material: Carbon steel Zinc chromate treatment

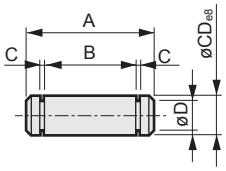

Model No.	Applicable bore size (mm)	A	B	C	D	CD	Applicable snap ring	Weight (kg)
S1-P-40	ø40,50	43.5	36.3	1.15	11.5	12	C type for shaft 12	0.04
S1-P-63	ø63	47.5	40.2	1.15	13.4	14	C type for shaft 14	0.04
S1-P-80	ø80,100	64	56.2	1.35	19	20	C type for shaft 20	0.16

Pin for rod eye

● Pin (P)

Material: Carbon steel Zinc chromate treatment

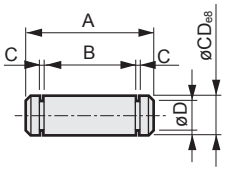

Model No.	Applicable bore size (mm)	A	B	C	D	CD	Applicable snap ring	Weight (kg)
S1-P-80	ø40,50	64	56.2	1.35	19	20	C type for shaft 20	0.16
SCS-125-P	ø63	75	66.3	1.35	23.9	25	C type for shaft 25	0.27
SCS-160-P	ø80	92	82.7	1.65	30.3	32	C type for shaft 32	0.56
SCS-180-P	ø100	115	103.2	1.9	38	40	C type for shaft 40	1.1

LCM
LCR
LCG
LCW
LCX
STM
STG
STS/STL
STR2
UCA2
ULK*
JSK/M2
JSG
JSC3/JSC4
USSD
UFCD
USC
UB
JSB3
LMB
LML
HCM
HCA
LBC
CAC4
UCAC2
CAC-N
UCAC-N
RCS2
RCC2
PCC
SHC
MCP
GLC
MFC
BBS
RRC
GRC
RV3*
NHS
HRL
LN
Hand
Chuk
MecHnd/Chuk
ShkAbs
FJ
FK
SpdContr
Ending

Control circuit

● Standard SHC / SHC-K (circuit 1)

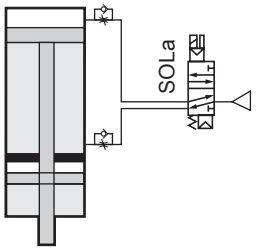

Driven the same as general cylinder.

● Booster single control circuit SHC-A (circuit 2)

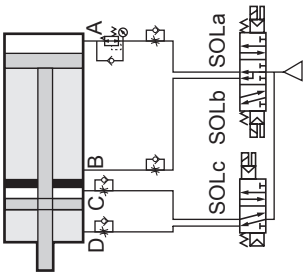

Solenoid valve	Travel stroke		Booster stroke
Operation status	SOLa	SOLb	SOLc
Travel stroke forward	ON	OFF	OFF
Travel stroke end	OFF	OFF	OFF
Standby for 0.1 sec or more	OFF	OFF	OFF
Booster stroke forward	ON	OFF	ON
Booster stroke backward	OFF	OFF	OFF
Standby for 0.1 sec or more	OFF	OFF	OFF
Travel stroke backward	OFF	ON	OFF

(Note) Attach the reverse regulator to the forward side (port A) of the moving cylinder, and vacuum it so that the port A and B sides can be balanced.
Otherwise, faulty operation at booster cylinder retraction may result.

● Booster single control circuit SHC-K-A (circuit 3)

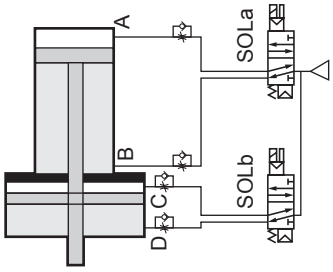

Solenoid valve	Travel stroke	Booster stroke
Operation status	SOLa	SOLb
Travel stroke forward	ON	OFF
Travel stroke end	ON	OFF
Standby for 0.1 sec or more	ON	OFF
Booster stroke forward	ON	ON
Booster stroke backward	ON	OFF
Standby for 0.1 sec or more	ON	OFF
Travel stroke backward	OFF	OFF

Booster single control operational diagram

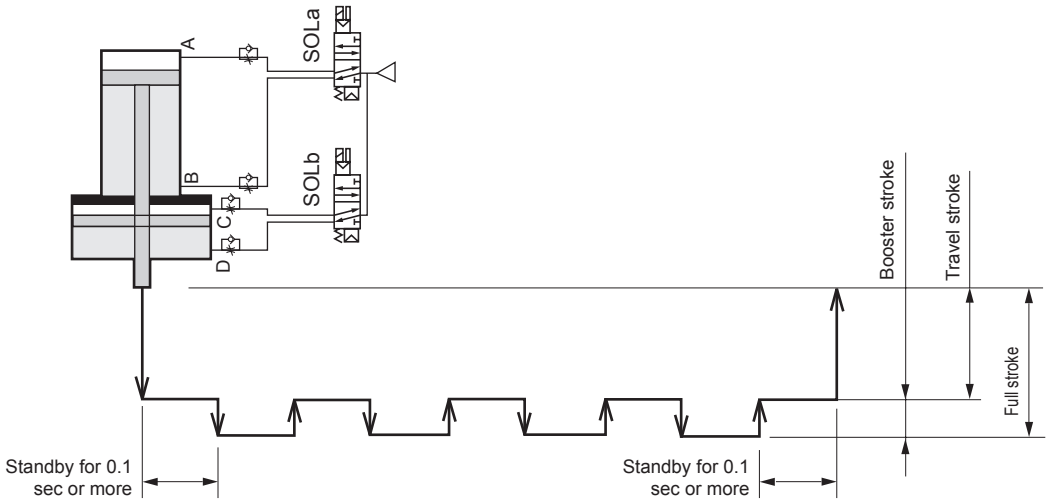

* Selection of solenoid valve is the same as selection of conventional bore size.
*1: When using a manifold, since upward load may allow back pressure from port D to enter port B, use individual exhaust spacers. Or control with a single unit.

LCM
LCR
LCG
LCW
LCX
STM
STG
STS/STL
STR2
UCA2
ULK*
JSK/M2
JSG
JSC3/JSC4
USSD
UFCD
USC
UB
JSB3
LMB
LML
HCM
HCA
LBC
CAC4
UCAC2
CAC-N
UCAC-N
RCS2
RCC2
PCC
SHC
MCP
GLC
MFC
BBS
RRC
GRC
RV3*
NHS
HRL
LN
Hand
Chuk
MecHnd/Chuk
ShkAbs
FJ
FK
SpdContr
Ending

Air consumption (in standard condition)

A) For simple reciprocating operation

(1) Air consumption per reciprocation

$$V=Q_1 x \frac{S_1}{100} + Q_2 x \frac{S_2}{10}$$

(2) Air consumption per minute

$$Q=VxN=(Q_1 x \frac{S_1}{100} + Q_2 x \frac{S_2}{10})xN$$

B) For high frequency operation

(1) Air consumption per reciprocation

$$V=Q_1 x \frac{S_1}{100} + Q_2 x \frac{S_2}{10} xn$$

(2) Air consumption per minute

$$Q=VxN=(Q_1 x \frac{S_1}{100} + Q_2 x \frac{S_2}{10} xn)xN$$

V:	Air consumption per reciprocation	ℓ(ANR)
Q:	Air consumption per minute	ℓ/min(ANR)
Q_1:	Air consumption of travel stroke section (Table 1)	ℓ(ANR)
Q_2:	Air consumption of booster stroke section (Table 2)	ℓ(ANR)
S_1:	Full stroke	mm
S_2:	Booster stroke	mm
N:	Full stroke reciprocating cycle per minute	cpm
n:	Number of reciprocations of booster stroke	Cycle

Table 1. Air consumption of movement stroke section (common to SHC and SHC-K)

Bore size (mm)	1 reciprocating air consumption per stroke 100 mm: Q_1ℓ (ANR)							
	Working pressure MPa							
	0.2	0.3	0.4	0.5	0.6	0.7	0.8	0.9
ø40	0.60	0.80	1.00	1.20	1.40	1.60	1.80	2.00
ø50	0.96	1.28	1.59	1.91	2.23	2.55	2.87	3.18
ø63	1.57	2.09	2.61	3.13	3.65	4.17	4.69	5.21
ø80	2.62	3.48	4.35	5.22	6.09	6.96	7.83	8.69
ø100	4.09	5.44	6.80	8.16	9.52	10.87	12.23	13.59

Table 2. Air consumption of booster stroke section

Bore size (mm)		1 reciprocating air consumption per stroke 100 mm: Q_2ℓ (ANR)							
		Working pressure MPa							
		0.2	0.3	0.4	0.5	0.6	0.7	0.8	0.9
Double force SHC	ø40	0.08	0.11	0.14	0.17	0.20	0.22	0.25	0.28
	ø50	0.14	0.19	0.23	0.28	0.33	0.37	0.42	0.47
	ø63	0.20	0.26	0.33	0.39	0.46	0.52	0.59	0.65
	ø80	0.28	0.38	0.47	0.56	0.66	0.75	0.85	0.94
	ø100	0.42	0.56	0.70	0.84	0.98	1.12	1.26	1.41
Quad force SHC-K	ø40	0.27	0.35	0.44	0.53	0.62	0.71	0.80	0.88
	ø50	0.42	0.56	0.70	0.84	0.98	1.12	1.26	1.40
	ø63	0.66	0.88	1.10	1.33	1.55	1.77	1.99	2.21
	ø80	1.10	1.47	1.83	2.20	2.56	2.93	3.29	3.66
	ø100	1.73	2.30	2.87	3.45	4.02	4.59	5.16	5.74

Example of calculation

Example 1. Simple reciprocating operation

Model No.: SHC-00-63H-300-20

Full stroke S_1 = 300 mm

Booster stroke S_2 = 20 mm

Working pressure = 0.5 MPa

Full stroke reciprocating cycle per minute N = 10 cpm

(1) Air consumption per reciprocation

$$V=3.13x\frac{300}{100}+0.39x\frac{20}{10}=10.17\ \ell(ANR)$$

(2) Air consumption per minute

$$Q=10.17x10=101.7\ \ell/min(ANR)$$

Example 2. High frequency operation

Model No.: SHC-00-63H-300-20

Full stroke S_1 = 300 mm

Booster stroke S_2 = 20 mm

Working pressure = 0.5 MPa

Full stroke reciprocating cycle per minute N = 1 cpm

Number of reciprocations of booster stroke n = 10 cycles

(1) Air consumption per reciprocation

$$V=3.13x\frac{300}{100}+0.39x\frac{20x10}{10}=17.19\ \ell(ANR)$$

(2) Air consumption per minute

$$Q=17.19x1=17.19\ \ell/min(ANR)$$

LCM
LCR
LCG
LCW
LCX
STM
STG
STS/STL
STR2
UCA2
ULK*
JSK/M2
JSG
JSC3/JSC4
USSD
UFCD
USC
UB
JSB3
LMB
LML
HCM
HCA
LBC
CAC4
UCAC2
CAC-N
UCAC-N
RCS2
RCC2
PCC
SHC
MCP
GLC
MFC
BBS
RRC
GRC
RV3*
NHS
HRL
LN
Hand
Chuk
MecHnd/Chuk
ShkAbs
FJ
FK
SpdContr
Ending

Calculating travel and booster speed relationship

Standard

Code

Sz: Booster speed (mm/s)

Si: Travel speed (mm/s)

a: Coefficient

b: Initial speed (when travel speed is 50 mm/s) (mm/s)

SHC Formula for 0.5 MPa supply pressure

Bore size (mm)	Booster speed formula (mm/s) Sz = a (Si-50) + b (50 ≤ Si ≤ max. travel speed)	Max. travel speed (mm/s)	
		0.5 [MPa]	0.9 [MPa]
ø40	Sz=0.186(Si-50)+7.2	540	640
ø50	Sz=0.173(Si-50)+8	520	620
ø63	Sz=0.157(Si-50)+9	510	610
ø80	Sz=0.135(Si-50)+10.3	480	570
ø100	Sz=0.123(Si-50)+11.1	450	540

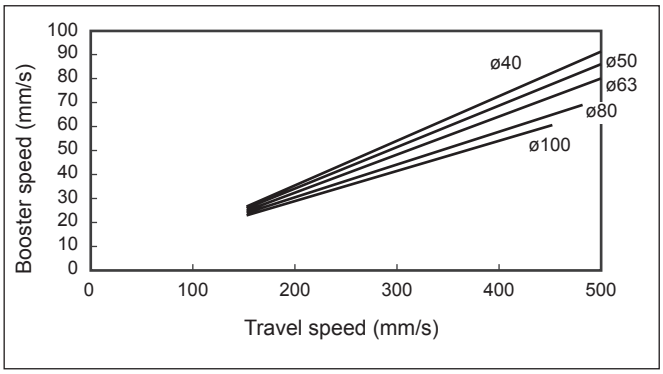

Note that travel and booster speed change about 5% when pressure increases by 0.1 [MPa].

· Example of formula

Booster speed to move SHC-00-63H-300-20 cylinder at a pressure of 0.5 [MPa] and travel speed of 500 [mm/s].

With the above formula,

Sz = 0.157 x (500-50) + 9 = 79.6 (mm/s) ≈ 79 (mm/s)

there will be 5% change at about 0.1 [MPa] at pressure of 0.8 [MPa] and so

it will be Sz' = 1.15 x Sz = 91.6 (mm/s) ≈ 91 (mm/s)

Since the max. travel speed also changes by about 5% as the pressure increases by 0.1 [MPa],

it will be SiMAX = 1.2 x Si = 612 (mm/s) ≈ 610 (mm/s)

The same formula applies when calculating the following.

SHC-K Formula for 0.5 MPa supply pressure

Bore size (mm)	Booster speed formula (mm/s) Sz = a (Si-50) + b (50 ≤ Si ≤ max. travel speed)	Max. travel speed (mm/s)	
		0.5 [MPa]	0.9 [MPa]
ø40	Sz=0.0149(Si-50)+2.3	540	640
ø50	Sz=0.025(Si-50)+2.6	520	620
ø63	Sz=0.0381(Si-50)+2.9	510	610
ø80	Sz=0.0553(Si-50)+3.3	480	570
ø100	Sz=0.0756(Si-50)+3.9	450	540

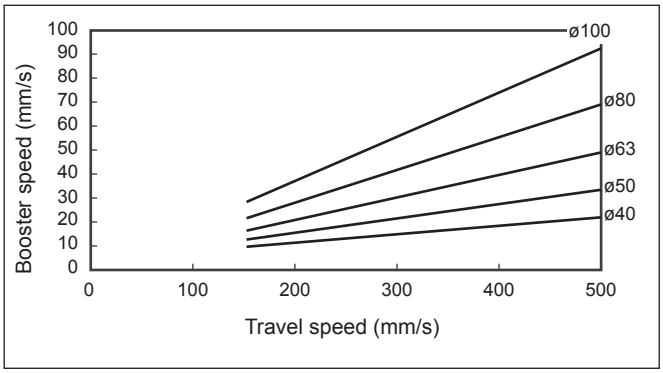

LCM
LCR
LCG
LCW
LCX
STM
STG
STS/STL
STR2
UCA2
ULK*
JSK/M2
JSG
JSC3/JSC4
USSD
UFCD
USC
UB
JSB3
LMB
LML
HCM
HCA
LBC
CAC4
UCAC2
CAC-N
UCAC-N
RCS2
RCC2
PCC
SHC
MCP
GLC
MFC
BBS
RRC
GRC
RV3*
NHS
HRL
LN
Hand
Chuk
MecHnd/Chuk
ShkAbs
FJ
FK
SpdContr
Ending

Booster single control

The booster cylinder reciprocates independently, so boosting speed changes with changes in supply pressure.

Code

Sz : Booster speed (mm/s)
P : Pressure (MPa)
c : Coefficient
d : Booster speed coefficient (mm/s)

SHC-A

Bore size (mm)	Booster speed formula (mm/s) Sz = cP + d (0.15 ≤ P ≤ 0.9 [MPa])
ø40	Sz=144P+67.3
ø50	Sz=152.1P+69.8
ø63	Sz=162.7P+73
ø80	Sz=176.6P+77.3
ø100	Sz=193P+82.3

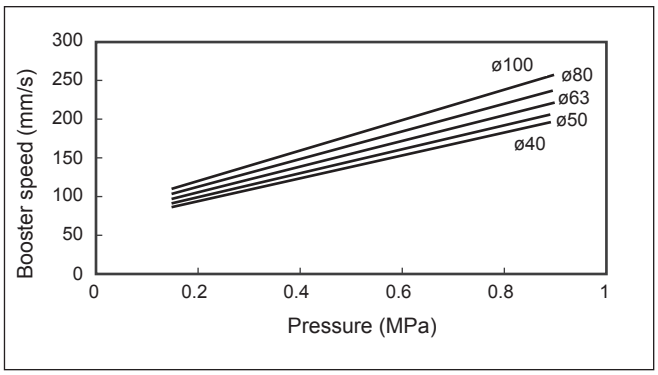

· Example of formula

Booster speed to move SHC-00-40-300-20-A cylinder at pressure of 0.5 [MPa].

With the above formula,

it will be Sz = 144 x 0.5 + 67.3 = 139.3 (mm/s) ≈ 139 (mm/s)

The same formula applies when calculating the following.

SHC-K-A

Bore size (mm)	Booster speed formula (mm/s) Sz = cP + d (0.15 ≤ P ≤ 0.9 [MPa])
ø40	Sz=48.4P+92.6
ø50	Sz=42.7P+85.3
ø63	Sz=35.2P+75.7
ø80	Sz=25.5P+63.2
ø100	Sz=14.1P+48.6

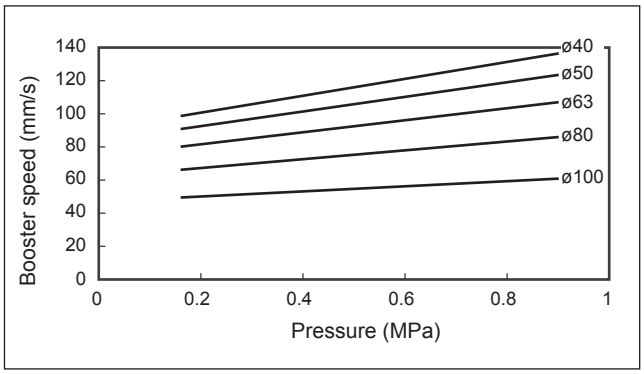

LCM
LCR
LCG
LCW
LCX
STM
STG
STS/STL
STR2
UCA2
ULK*
JSK/M2
JSG
JSC3/JSC4
USSD
UFCD
USC
UB
JSB3
LMB
LML
HCM
HCA
LBC
CAC4
UCAC2
CAC-N
UCAC-N
RCS2
RCC2
PCC
SHC
MCP
GLC
MFC
BBS
RRC
GRC
RV3*
NHS
HRL
LN
Hand
Chuk
MecHnd/Chuk
ShkAbs
FJ
FK
SpdContr
Ending

Travel speed and time to reach 90% thrust

Standard

Code

t: Time to reach 90% thrust (time to reach 90% thrust after contacting object) (s)

e, e': Coefficient

Si: Travel speed (mm/s)

f, f', f'': Time (s) at travel speed of 50, 100 and 300 mm/s

SHC Formula for 0.5 MPa supply pressure

Bore size (mm)	Formula for time to reach 90% thrust at 50 to 100 mm/s travel speed (s) t = e (Si-50) + f (50 ≤ Si ≤ 100)	Formula for time to reach 90% thrust at 100 mm/s or higher travel speed (s) t = e (Si-100) + f (100 ≤ Si ≤ max. travel speed)	Max. travel speed (mm/s)
ø40	t=-0.0146(Si-50)+2.1	t=-0.00167(Si-100)+1.37	540
ø50	t=-0.013(Si-50)+2.05	t=-0.0013(Si-100)+1.4	520
ø63	t=-0.013(Si-50)+1.93	t=-0.00125(Si-100)+1.35	510
ø80	t=-0.0118(Si-50)+1.93	t=-0.000934(Si-100)+1.34	480
ø100	t=-0.0104(Si-50)+1.85	t=-0.0005625(Si-100)+1.33	450

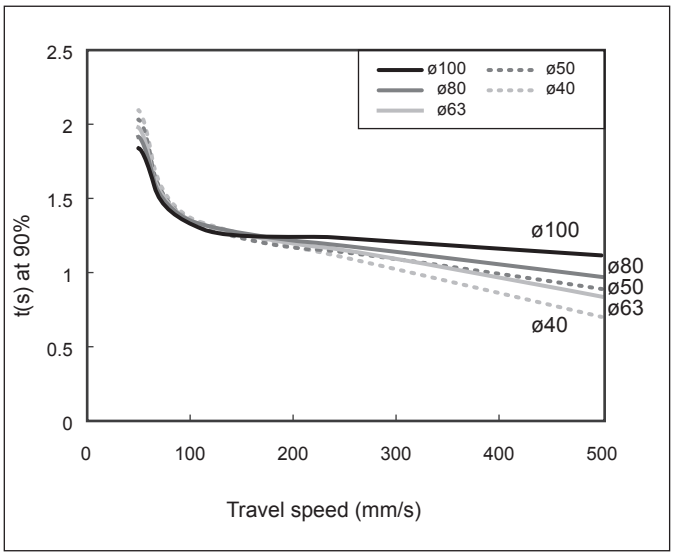

Note that the time to reach 90% thrust takes about 5 to 10% longer when supply pressure rises by 0.1 [MPa]. The max. travel speed increases about 5% when pressure rises by 0.1 [MPa].

· Example of calculation

Time to reach 90% thrust when SHC-00-63H-300-20 cylinder is moved at a pressure of 0.5 [MPa] and travel speed of 500 [mm/s].

With the above formula,

t = -0.00125 x (500-100) + 1.35 = 0.85 (s) ≈ 0.8 (s)

Since there is a 5 to 10% change at about 0.1 [MPa] at pressure of 0.8 [MPa],

t' = (1.15 to 1.3) t = 0.98 to 1.1 (s) ≈ 1.0 (s)

is a guideline. When using the double force, time is not varied much by the full stroke. The K (quad force) below has a separate functional expression because the time to attain thrust differs slightly with the full stroke (full stroke < 300 and full stroke ≥ 300). The time for the booster stroke 10 [mm] and 20 [mm] does not vary much.

LCM
LCR
LCG
LCW
LCX
STM
STG
STS/STL
STR2
UCA2
ULK*
JSK/M2
JSG
JSC3/JSC4
USSD
UFCD
USC
UB
JSB3
LMB
LML
HCM
HCA
LBC
CAC4
UCAC2
CAC-N
UCAC-N
RCS2
RCC2
PCC
SHC
MCP
GLC
MFC
BBS
RRC
GRC
RV3*
NHS
HRL
LN
Hand
Chuk
MecHnd/Chuk
ShkAbs
FJ
FK
SpdContr
Ending

SHC-K Formula for 0.5 MPa supply pressure

· Full stroke < 300 mm

Bore size (mm)	Formula for time to reach 90% thrust at 50 to 100 mm/s travel speed (s) t = e (Si−50) + f (50 ≤ Si ≤ 100)	Formula for time to reach 90% thrust at 100 to 300 mm/s travel speed (s) t = e (Si-100) + f (100 ≤ Si ≤ max. travel speed)	Formula for time to reach 90% thrust at 300 mm/s or higher travel speed (s) t = e" (Si-300) + f" (300 ≤ Si ≤ max. travel speed)	Max. travel speed (mm/s)
ø40 Note	t=-0.094(Si-50)+8.7	t=-0.014(Si-100)+4	t=-0.0034(Si-300)+1.2	540
ø50	t=-0.1(Si-50)+8.9	t=-0.01(Si-100)+3.9	t=-0.00078(Si-300)+1.9	520
ø63	t=-0.095(Si-50)+8.51	t=-0.009885(Si-100)+3.76	t=-0.0011(Si-300)+1.783	510
ø80	t=-0.0886(Si-50)+8	t=-0.0097(Si-100)+3.57	t=-0.00152(Si-300)+1.63	480
ø100	t=-0.081(Si-50)+7.4	t=-0.0095(Si-100)+3.35	t=-0.002(Si-300)+1.45	450

Note For SHC-K-40 only, when travel speed is 500 [mm/s] and over, there is almost no time variation until thrust attains 90%.

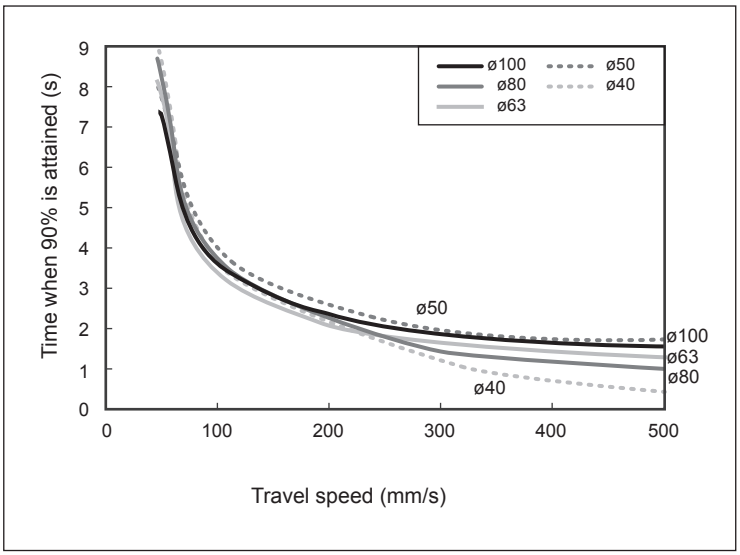

· Full stroke ≥ 300 mm

Bore size (mm)	Formula for time to reach 90% thrust at 50 to 100 mm/s travel speed (s) t = e (Si−50) + f (50 ≤ Si ≤ 100)	Formula for time to reach 90% thrust at 100 to 300 mm/s travel speed (s) t = e (Si-100) + f (100 ≤ Si ≤ max. travel speed)	Formula for time to reach 90% thrust at 300 mm/s or higher travel speed (s) t = e" (Si-300) + f" (300 ≤ Si ≤ max. travel speed)	Max. travel speed (mm/s)
ø40 Note	t=-0.049(Si-50)+5.15	t=-0.00925(Si-100)+2.7	t=-0.0017(Si-300)+0.85	540
ø50	t=-0.051(Si-50)+5.21	t=-0.0063(Si-100)+2.66	t=-0.00039(Si-300)+1.4	520
ø63	t=-0.0484(Si-50)+4.98	t=-0.0062(Si-100)+2.56	t=-0.000548(Si-300)+1.32	510
ø80	t=-0.045(Si-50)+4.68	t=-0.00612(Si-100)+2.43	t=-0.000765(Si-300)+1.206	480
ø100	t=-0.041(Si-50)+4.33	t=-0.006(Si-100)+2.28	t=-0.001(Si-300)+1.08	450

Note For SHC-K-40 only, when travel speed is 500 [mm/s] and over, there is almost no time variation until thrust attains 90%.

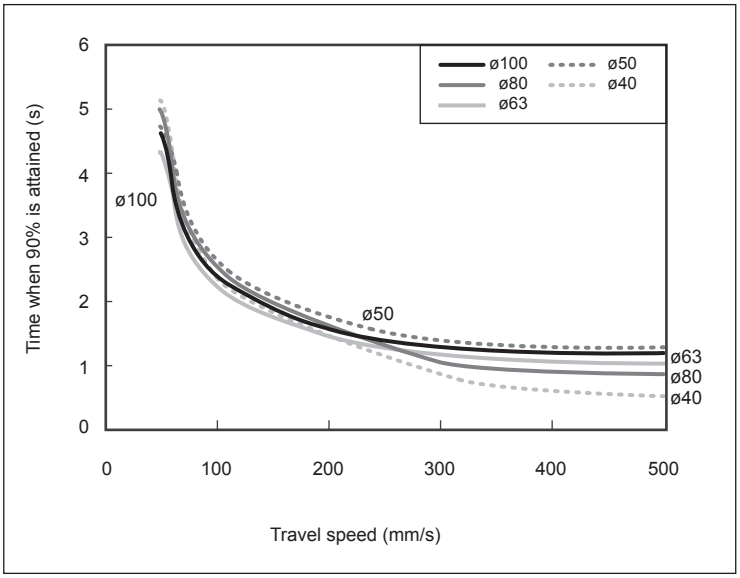

LCM
LCR
LCG
LCW
LCX
STM
STG
STS/STL
STR2
UCA2
ULK*
JSK/M2
JSG
JSC3/JSC4
USSD
UFCD
USC
UB
JSB3
LMB
LML
HCM
HCA
LBC
CAC4
UCAC2
CAC-N
UCAC-N
RCS2
RCC2
PCC
SHC
MCP
GLC
MFC
BBS
RRC
GRC
RV3*
NHS
HRL
LN
Hand
Chuk
MecHnd/Chuk
ShkAbs
FJ
FK
SpdContr
Ending

Booster single control

Individually reciprocating booster cylinder part varies the time until thrust is generated by supply pressure. The time until thrust generated applies only to the booster cylinder section.

Code

t: Time to reach 90% thrust (time to reach 90% thrust after contacting object) (s)

G: Coefficient

P: Pressure (MPa)

H: Time coefficient (s) until thrust attains 90%

SHC-A

Bore size (mm)	Formula for time to reach 90% thrust (s) t = GP + H (0.15 ≤ P ≤ 0.9 [MPa])
ø40	t=0.05P+0.123
ø50	t=0.0826P+0.135
ø63	t=0.125P+0.1525
ø80	t=0.18P+0.174
ø100	t=0.245P+0.2

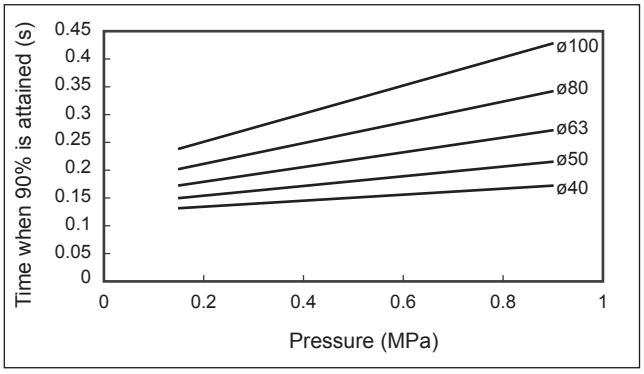

· Example of calculation

Time to reach 90% thrust when SHC-00-63H-300-20-A cylinder is moved at a pressure of 0.5 [MPa].

With the above formula,

it will be t = 0.125 x 0.5 + 0.1525 = 0.215 (s) ≈ 0.2 (s)

The time for the booster stroke 10 [mm] and 20 [mm] does not vary much.

The same formula applies when calculating the following.

SHC-K-A

Bore size (mm)	Formula for time to reach 90% thrust (s) t=GP+H (0.15 ≤ P ≤ 0.9 [MPa])
ø40	t=0.11P+0.165
ø50	t=0.121P+0.172
ø63	t=0.135P+0.181
ø80	t=0.153P+0.193
ø100	t=0.175P+0.2075

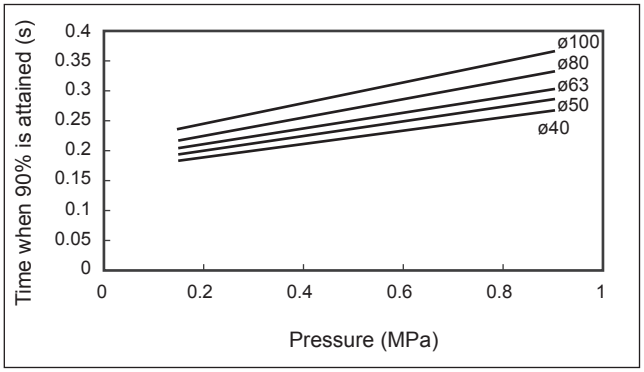

LCM
LCR
LCG
LCW
LCX
STM
STG
STS/STL
STR2
UCA2
ULK*
JSK/M2
JSG
JSC3/JSC4
USSD
UFCD
USC
UB
JSB3
LMB
LML
HCM
HCA
LBC
CAC4
UCAC2
CAC-N
UCAC-N
RCS2
RCC2
PCC
SHC
MCP
GLC
MFC
BBS
RRC
GRC
RV3*
NHS
HRL
LN
Hand
Chuk
MecHnd/Chuk
ShkAbs
FJ
FK
SpdContr
Ending

Theoretical thrust formula

SHC pressurized area table

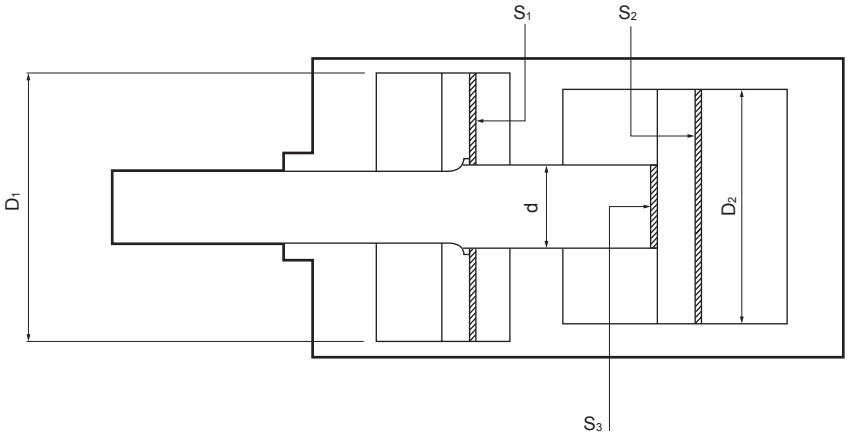

● SHC

Bore size (mm)	S_1 [cm^2]	S_2 [cm^2]	S_3 [cm^2]	D_1 [mm]	D_2 [mm]	d [mm]
ø40	13.4	12.5	6.15	ø50	ø40	ø28
ø50	23.1	19.6	8.04	ø63	ø50	ø32
ø63	31.6	31.1	12.5	ø75	ø63	ø40
ø80	43.9	50.2	19.6	ø90	ø80	ø50
ø100	66.7	78.5	28.2	ø110	ø100	ø60

● SHC-K

Bore size (mm)	S_1 [cm^2]	S_2 [cm^2]	S_3 [cm^2]	D_1 [mm]	D_2 [mm]	d [mm]
ø40	44.1	12.5	6.15	ø80	ø40	ø28
ø50	70.4	19.6	8.04	ø100	ø50	ø32
ø63	110.1	31.1	12.5	ø125	ø63	ø40
ø80	181.4	50.2	19.6	ø160	ø80	ø50
ø100	285.8	78.5	28.2	ø200	ø100	ø60

$S_1 = \frac{\pi}{4}(D_1^2 - d^2)$ $S_2 = \frac{\pi}{4} D_2^2$ $S_3 = \frac{\pi}{4} d^2$

Formula

Theoretical thrust = low thrust (booster section) effective cross-sectional area * air pressure

Example: Theoretical thrust when a ø63 cylinder is operated at 0.5 [MPa]

· Theoretical thrust of thrust section for push

$F = S_2P = 31.1(cm^2) \times 10^{-4} \times 0.5(MPa) \times 10^6 = 1558(N)$

· Theoretical thrust of booster section for push

$F = (S_1+S_2)P = (31.6+31.1)(cm^2) \times 10^{-4} \times 0.5(MPa) \times 10^6 = 3139(N)$

· Theoretical thrust of thrust section for pull

$F = (S_2-S_3)P = (31.1-12.5)(cm^2) \times 10^{-4} \times 0.5(MPa) \times 10^6 = 930(N)$

· Theoretical thrust of booster section for pull

$F = \{S_1 + (S_2 - S_3)\} P = \{31.6 + (31.1-12.5)\} (cm^2) \times 10^{-4} \times 0.5 (MPa) \times 10^6 = 2511 (N)$

Below decimal point is rounded up.

Pneumatic components

Safety Precautions

Be sure to read this section before use.
Refer to Intro Page 73 for general information of the cylinder, and to Intro Page 80 for general information of the cylinder switch.

Product-specific cautions: High power cylinder SHC Series

Design/selection

WARNING

■ Intermediate stop
Do not use it for braking due to its structure. The stopping position will become extremely unstable.

CAUTION

■ Use within the max. stroke.

■ Do not use an ABR port connection solenoid valve for the independent control of the booster.
B and D port passages are connected in the cylinder when the booster cylinder retracts, so air is exhausted from the R port of the solenoid valve.

■ Set the boosted stroke at a position exceeding the dead zone below.
Using it at the dead zone stroke may compromise the thrust of the booster.

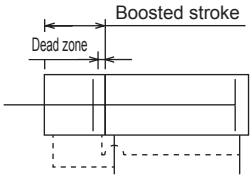

Refer to boosted stroke dead zone dimensions on pages 1144 and 1154.

■ Use discrete solenoid valves in the booster control single circuit. Also, use a separate exhaust spacer when embedding it to a manifold.
The booster port exhaust may flow into the travel port and cause operation faults.

■ Provide a lag of 0.1 seconds or longer at the movement stroke end in the independent control of the booster.
If A and C ports are pressurized simultaneously, the booster piston and coupling collar cannot be connected and will lead to malfunctions. When operating, pressurize A port, then provide a 0.1 second or longer lag at the travel stroke limit before pressurizing the C port.

■ Do not allow a supply pressure differential between port B side and ports C and D side in the independent control of the booster.
Otherwise, disrupted air flow may cause malfunctions. Consult with CKD if a pressure difference must be set.

■ Select in consideration of impact at the time of cylinder coupling.
Due to the product structure, impact is generated when the booster piston and coupling collar connect. Take impact into consideration when designing the equipment. Consult with CKD because the impact value differs with working conditions.

Bore size	Impact value (m/s^2)
ø40	147
ø50	147
ø63	147
ø80	196
ø100	196

■ Note that thrust differs when the boosted stroke cylinder is advancing and retracting.
When the booster starts to retract, a thrust equivalent to double or 4-fold is applied. However, due to the product structure, the thrust is about 70% of the theoretical thrust during travel. Note that the dead zone stroke may compromise the booster thrust in both advancing and retracting.

■ Do not apply an eccentric load to the piston rod.
The booster piston and connecting collar cannot be connected and will lead to malfunctions due to the structure. Be sure to provide guides, floating fittings and the like so as to prevent eccentric load from being applied.

■ Mount a speed controller on the cylinder.
If each cylinder is used at a speed exceeding the working piston speed, correct coupling is not possible and operation faults may occur.
In addition, contact CKD if the load factor is high as inertia may cause the load to reach the end of the force-increasing stroke and strike the workpiece.

■ Do not use multiple synchronized cylinders.
The booster piston and connecting collar cannot be connected and will lead to malfunctions.

■ Note that the piston rod may pop out when decoupling the cylinder.
When using the cylinder with the rod facing upward, if the load factor for the rapid feed section thrust is high, the back pressure of the rapid feed section will decrease when the coupling is released when the rod is lowered, possibly causing the popping out phenomenon. With a high load factor, use of the independent control of the booster “-A” is recommended.

■ Do not apply a reaction force on the piston rod during the travel stroke.
The booster piston and connecting collar cannot be connected and will lead to malfunctions due to the structure.

■ Allow a sufficient margin for the supply pressure with respect to the load weight at the end.

If the load at the end is heavier than the supply pressure, faulty connection release or popping out could occur. For the load weight at the end, use the weight equal to or less than the theoretical thrust of PULL PUSH for the rapid feed section when the rod is facing downward and -0.25MPa for the rapid feed section when the rod is facing upward. With a high load factor, use of the independent control of the booster "-A" is recommended.

Mounting, installation and adjustment

⚠ WARNING

■ Do not apply load to the pass-pipe.

Otherwise, air to the boosted stroke passes through and may prevent the boosted stroke cylinder from operating.

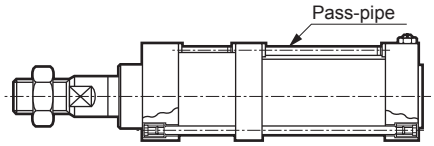

MCP

Mechanical power cylinder

Actual thrust : 2t / 5t

Special

Overview

An environmentally-friendly cylinder that allows 2t or 5t high thrust power at your desired position with a pneumatic source alone.

Description

Product introduction	1176
Series variation	1178
● Mechanical power cylinder (MCP)	1180
⚠ Safety precautions	1188

The cylinder switches T2YH, T2YV, T3YH, and T3YV are scheduled for end of production at the end of December 2023.

Realizes high thrust at any position using only a pneumatic source! Incorporated flexibly into a multi-model production line

Mechanical power cylinder

MCP Series

Only pneumatic units are used for driving.
Since no hydraulic devices such as pneumatic units or high-pressure hoses are used with this eco-friendly cylinder, no waste oil is generated.

- Thrust eight times higher than a cylinder with the same bore size is achieved during boosting.
- Space saving design needs no dedicated units.
- No oil is used, eliminating the need for maintenance such as lubrication and oil replacement.
- Free installation

Operation principle

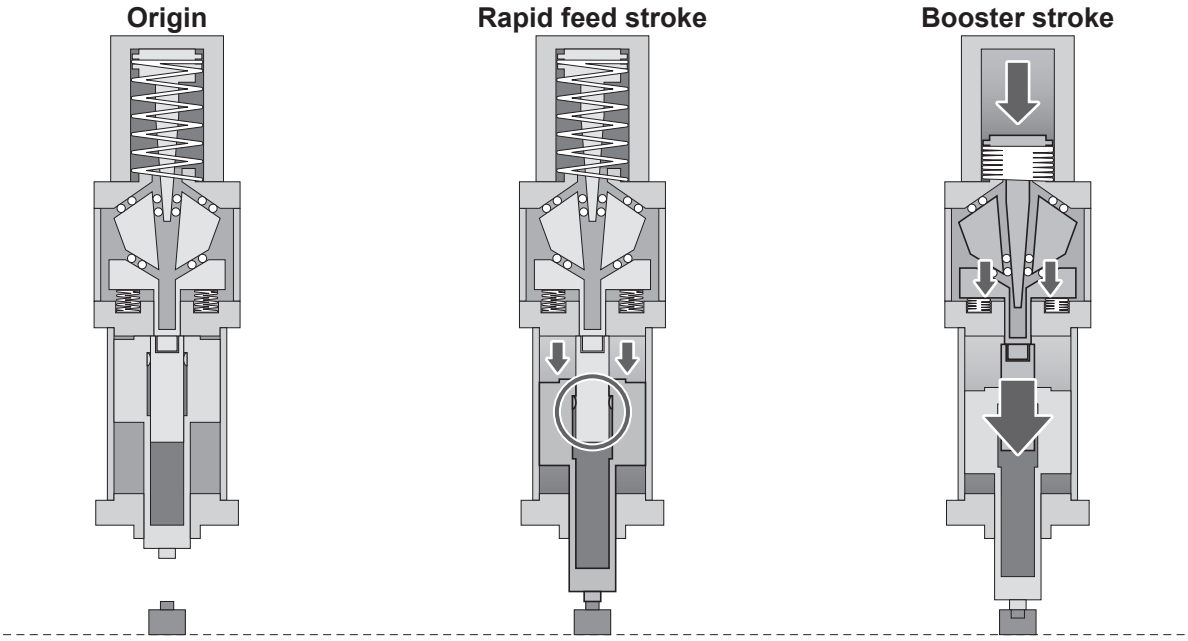

When the rapid feed section of cylinder contacts the workpiece, the circled section is coupled due to the internal mechanism.

After coupling, force is conveyed to the rapid feed section by operating the booster section, generating high thrust.

Boost power at an arbitrary position!

Automatic boosting even if the workpiece height is changed or there are variations in the workpiece.

Booster stroke 10 mm or more is possible!

You can hold down the workpiece at rapid speeds until the required booster stroke, and repeat the pressure and exhaust of the booster stroke unit.

×8

■Applications

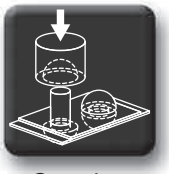
Swaging

Press-fitting

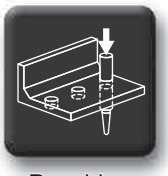
Punching

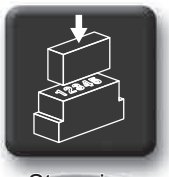
Stamping

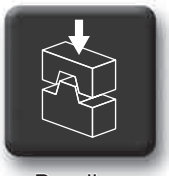
Bending

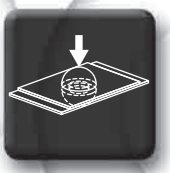
Riveting

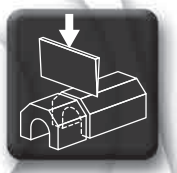
Cutting

POWER

Mechanical power cylinder MCP Series

Variation	Model No.	Effective thrust (Thrust at 0.6 MPa)	Stroke (mm)	
Rapid feed + booster	MCP-W	For 2t/5t	50/100/150/200/250/300/350/400/450/500	
Booster section only	MCP-S	For 2t/5t	10	

LCM
LCR
LCG
LCW
LCX
STM
STG
STS/STL
STR2
UCA2
ULK*
JSK/M2
JSG
JSC3/JSC4
USSD
UFCD
USC
UB
JSB3
LMB
LML
HCM
HCA
LBC
CAC4
UCAC2
CAC-N
UCAC-N
RCS2
RCC2
PCC
SHC
MCP
GLC
MFC
BBS
RRC
GRC
RV3*
NHS
HRL
LN
Hand
Chuk
MecHnd/Chuk
ShkAbs
FJ
FK
SpdContr
Ending

●: Standard ○:Option

	Min. stroke	Max. stroke	Mounting		Option	Page
			Basic	Rod side flange	Rod end male thread	
	(mm)	(mm)	00	FA	N	
	50	500	●	●	○	1180
	-	-	●	●	○	

Mechanical power cylinder

MCP Series

● Effective thrust: For 2t/5t

RoHS CAD

Specifications

1 MPa = 10 bar

Item		Effective thrust (Thrust at 0.6 MPa)	
		2 (for 2t)	5 (for 5t)
Working fluid		Compressed air	
Actuation		Rapid feed : Double acting, Booster : Single acting push	
Min. working pressure	MPa	Rapid feed : 0.3 (≈44 psi, 3 bar), Booster and MCP-S: 0.2 (≈29 psi, 2 bar)	
Max. working pressure	MPa	0.6 (≈87 psi, 6 bar)	
Proof pressure	MPa	1.0 (≈150 psi, 10 bar)	
Ambient temperature	°C	-5 (23°F) to 60 (140°F) (no freezing)	
Rod end form		Female thread (male thread optional)	
Booster stroke	mm	10^{+5}_{0} *1	
Rapid feed port size		Rc1/4	Rc3/8
Booster port size		Rc3/8	
Rapid feed working piston speed	mm/s	50 to 300	
Booster working piston speed	mm/s	10 to 50	
Lubrication		Not available	
Theoretical booster thrust (when the booster and rapid feed pressures are equal) *2	KN	0.3 MPa (≈44 psi)	S=11.5 W=13.9	S=28.5 W=33.1
		0.4 MPa (≈58 psi)	S=15.7 W=18.9	S=38.7 W=44.9
		0.5 MPa (≈73 psi)	S=19.9 W=23.8	S=49.0 W=56.7
		0.6 MPa (≈87 psi)	S=24.1 W=28.8	S=59.2 W=68.4
Theoretical rapid feed thrust	KN	0.3 MPa (≈44 psi)	Forward 2.3, backward 1.6	Forward 4.6, backward 2.9
		0.4 MPa (≈58 psi)	Forward 3.1, backward 2.1	Forward 6.1, backward 3.8
		0.5 MPa (≈73 psi)	Forward 3.9, backward 2.7	Forward 7.6, backward 4.8
		0.6 MPa (≈87 psi)	Forward 4.7, backward 3.2	Forward 9.2, backward 5.8

*1 : By repeating pressurizing and exhaust of the booster section only, a 10-mm boost per repeat can be obtained within the total stroke.
*2 : The actual thrust is about 80% of the theoretical value
*3 : Because MCP-S is a single acting cylinder, the applied load (jig weight) on the piston rod end should be 20 kg or less for the 2t and 50 kg or less for the 5t.

Air consumption

Air consumption per reciprocation of booster stroke ℓ (ANR)

Pressure (MPa) / Thrust	0.3	0.4	0.5	0.6
2t	2.51	3.13	3.76	4.38
5t	6.13	7.65	9.18	10.70

Air consumption per 100 mm reciprocation of rapid feed stroke ℓ (ANR)

Pressure (MPa) / Thrust	0.3	0.4	0.5	0.6
2t	5.28	6.60	7.91	9.23
5t	9.95	12.43	14.91	17.39

Total stroke *4

Standard stroke (mm)	Max. stroke (mm)	Min. stroke (mm)	Min. stroke with switch (mm)
50,100,150,200,250,300,350, 400,450,500	500	50	50

*4 : For "rapid feed stroke + booster stroke", set the stroke of "+5 mm and over" as total stroke.

Switch specifications (T-switch)

Item	Proximity 2-wire	Proximity 2-wire			Proximity 3-wire				Reed 2-wire						
	T1H/T1V	T2H/T2V/ T2JH/T2JV	T2YH/ T2YV	T2WH/ T2WV	T3H/ T3V	T3PH/ T3PV	T3YH/ T3YV	T3WH/ T3WV	T0H/T0V		T5H/T5V		T8H/T8V		
Applications	For programmable controller, relay, compact solenoid valve	Dedicated for programmable controller			For programmable controller, relay				For programmable controller, relay		For programmable controller, relay, IC circuit (no indicator lamp), serial connection		For programmable controller, relay		
Output method	-				NPN output	PNP output	NPN output	NPN output	-						
Pwr. supp. V.	-				10 to 28 VDC				-						
Load voltage	85 to 265 VAC	10 to 30 VDC		24 VDC ±10%	30 VDC or less				12/24 VDC	110 VAC	5/12/24 VDC	110 VAC	12/24 VDC	110 VAC	220 VAC
Load current	5 to 100 mA	5 to 20 mA (*3)			100 mA or less		50 mA or less		5 to 50 mA	7 to 20 mA	50 mA or less	20 mA or less	5 to 50 mA	7 to 20 mA	7 to 10 mA
Indicator	LED (Lit when ON)	LED (Lit when ON)	Red/green LED (Lit when ON)	Red/green LED (Lit when ON)	LED (Lit when ON)	Yellow LED (Lit when ON)	Red/green LED (Lit when ON)	Red/green LED (Lit when ON)	LED (Lit when ON)		No indicator lamp		LED (Lit when ON)		
Leakage current	≤ 1 mA at 100 VAC, ≤ 2 mA at 200 VAC	1 mA or less			10 μA or less				0 mA						
Weight g	1 m:33 3 m:87 5 m:142	1 m:18 3 m:49 5 m:80	1 m:33 3 m:87 5 m:142	1 m:18 3 m:49 5 m:80	1 m:18 3 m:49 5 m:80		1 m:33 3 m:87 5 m:142	1 m:18 3 m:49 5 m:80	1 m:18 3 m:49 5 m:80				1 m:33 3 m:87 5 m:142		

*1 : Refer to Ending Page 1 for detailed switch specifications and dimensions.
*2 : Switches other than the above models, such as switches with connectors, are also available. Refer to Ending Page 1.
*3 : The max. load current is 20 mA at 25°C. The current is lower than 20 mA if the operating ambient temperature around the switch is higher than 25°C. (5 to 10 mA at 60°C)

Cylinder weight

● MCP-S (booster only)

Unit: kg

Item	Product weight for 10st stroke		Additional weight per 100 mm	Additional weight for male thread (N)	Switch weight
	Basic (00)	Rod side flange (FA)			
MCP-S-2-10	14.3	16.9	-	0.4	Refer to the weight in the switch specifications.
MCP-S-5-10	36.1	43.4	-	1.2	

● MCP-W (rapid feed + booster)

Unit: kg

Item	Product weight when at 0 mm stroke		Additional weight per 100 mm	Additional weight for male thread (N)	Switch weight	Mounting bracket weight
	Basic (00)	Rod side flange (FA)				
MCP-W-2	24.3	26.9	1.9	0.95	Refer to the weight in the switch specifications.	0.024
MCP-W-5	63.8	71.1	4.5	4.6		0.030

(Example) Product weight of MCP-W-00-2-100-T2H-D-N

- ● Product weight at 0 mm stroke ……24.3 kg
- ● Additional weight per 100 mm stroke ……1.9 x $\frac{100}{100}$ = 1.9 kg
- ● Male thread additional weight ……0.92 kg
- ● Weight of 2 T2H switches ……0.018 x 2 = 0.036 kg
- ● Weight of 2 mounting brackets ……0.024 x 2 = 0.048 kg
- ● Product weight ……24.3 + 1.9 + 0.92 + 0.036 + 0.048 = 27.204 kg

LCM
LCR
LCG
LCW
LCX
STM
STG
STS/STL
STR2
UCA2
ULK*
JSK/M2
JSG
JSC3/JSC4
USSD
UFCD
USC
UB
JSB3
LMB
LML
HCM
HCA
LBC
CAC4
UCAC2
CAC-N
UCAC-N
RCS2
RCC2
PCC
SHC
MCP
GLC
MFC
BBS
RRC
GRC
RV3*
NHS
HRL
LN
Hand
Chuk
MecHnd/Chuk
ShkAbs
FJ
FK
SpdContr
Ending

How to order

Without switch (built-in magnet for switch)

MCP-W - 00 - 2 - 100 ——— N

With switch (built-in magnet for switch)

MCP-W - 00 - 2 - 100 - T2H - R - N

Ⓐ Model No.

Ⓑ Mounting *1

Ⓒ Effective thrust

Ⓓ Total stroke *2

Ⓔ Switch model No.
* indicates the lead wire length.

Ⓕ Switch quantity

Ⓖ Option

Code	Description
Ⓐ Model No.	
MCP-W	Rapid feed + booster
MCP-S	Booster section only
Ⓑ Mounting	
00	Basic
FA	Rod side flange
Ⓒ Effective thrust	
2	For 2t
5	For 5t
Ⓓ Total stroke (mm)	
50, 100, 150, 200, 250, 300, 350, 400, 450, 500	

Ⓔ Switch model No.

Straight Lead wire	L-shaped Lead wire	Contact	Voltage AC	Voltage DC	Indicator	Lead wire
T0H*	T0V*	Reed	●	●	1-color LED	2-wire
T5H*	T5V*	Reed	●	●	No indicator lamp	2-wire
T8H*	T8V*	Reed	●	●	1-color LED	2-wire
T1H*	T1V*	Proximity	●		1-color LED	2-wire
T2H*	T2V*	Proximity		●	1-color LED	2-wire
T3H*	T3V*	Proximity		●	1-color LED	3-wire
T3PH*	T3PV*	Proximity		●	1-color LED	3-wire
T2YH*	T2YV*	Proximity		●	2-color LED	2-wire
T2WH*	T2WV*	Proximity		●	2-color LED	2-wire
T3YH*	T3YV*	Proximity		●	2-color LED	3-wire
T3WH*	T3WV*	Proximity		●	2-color LED	3-wire
T2JH*	T2JV*	Proximity		●	Off-delay	2-wire

* Lead wire length	
Blank	1 m (standard)
3	3 m (option)
5	5 m (option)

Ⓕ Switch quantity	
R	1 on rod side
H	1 on head side
D	2
T	3

Ⓖ Option	
Blank	Rod end female thread
N	Rod end male thread

⚠ Precautions for model No. selection

*1: Mounting bracket will be shipped assembled with the product.
*2: For MCP-S, it will be stroke = booster stroke = 10 mm fixed.
Ⓓ Total stroke cannot be selected.
*3: A piston magnet is also built into the MCP-W booster, so a switch can be mounted. Purchase the switch body separately.

[Example of model No.1]

MCP-W-00-2-100-T2H-D-N

Model : Mechanical Power Cylinder (MCP) Series

Ⓐ Model No. : Rapid feed + booster
Ⓑ Mounting : Basic
Ⓒ Effective thrust : For 2t
Ⓓ Total stroke : 100 mm
Ⓔ Switch model No. : Proximity T2H switch, lead wire 1 m
Ⓕ Switch quantity : 2
Ⓖ Option : Rod end male thread

[Example of model No. 2]

MCP-S-00-2-T2H-D-N

Model: Mechanical Power Cylinder (MCP) Series

Ⓐ Model No. : Booster section only
Ⓑ Mounting : Basic
Ⓒ Effective thrust : For 2t
Ⓔ Switch model No. : Proximity T2H switch, lead wire 1 m
Ⓕ Switch quantity : 2
Ⓖ Option : Rod end male thread

How to order switch

● Switch body + mounting bracket set

MCP - T0H - 2

Effective thrust (Item Ⓒ above)

Switch model No. (Item Ⓓ above)

● Switch body only

SW - T0H

Switch model No. (Item Ⓓ above)

● Switch mounting bracket set

MCP - T - 2

Effective thrust (Item Ⓒ above)

Mounting bracket

Note : A switch bracket is not required for MCP-S.

Operational principle

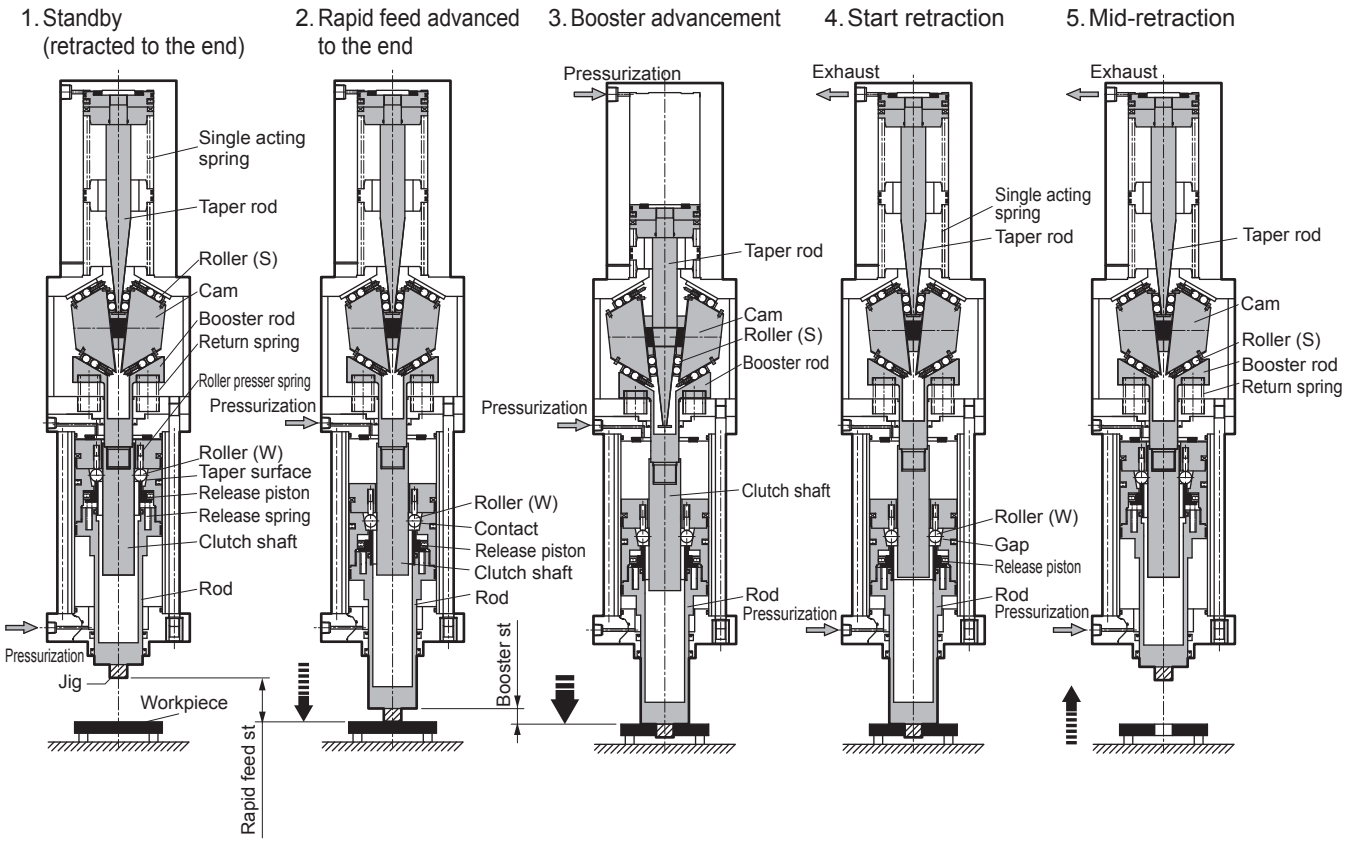

The release spring creates a gap between the taper surface and 6 rollers (W), allowing the rapid feed head side to pressurize, advancing the rod. Advancing to strike the workpiece and then discharging causes the release piston to be pressed, contracting the release spring, which causes the rollers (W) to contact the clutch shaft and taper surface.

Pressurizing the booster head side provides the force to advance the taper rod which widens due to the wedge effect, spreading the cam out via the roller (S), in turn boosting the clutch shaft integrated into the boost rod vertically.
The rod is linked with the clutch shaft through the wedge effect, boosting its effect to punch out the workpiece.

Exhausting the booster pressure causes the taper rod to push back via the single acting spring. Next, pressurizing the rapid feed rod side pushes the release piston back in, creating a gap between the rollers (W) and taper surface, releasing the connection and causing the rod to retract.

Pushing the taper rod back causes the booster rod to return via the return spring, returning the cam to its original position via roller (S).

By repeating pressurizing and exhaust of the booster section only, a 10-mm boost per repeat can be obtained within the total stroke.

⚠ CAUTION

Set the total stroke with some margin over the sum of the rapid feed stroke and booster stroke.
Refer to the precautions on page 1189 for details about total stroke settings.

Internal structure and parts list

● MCP-S (booster only)

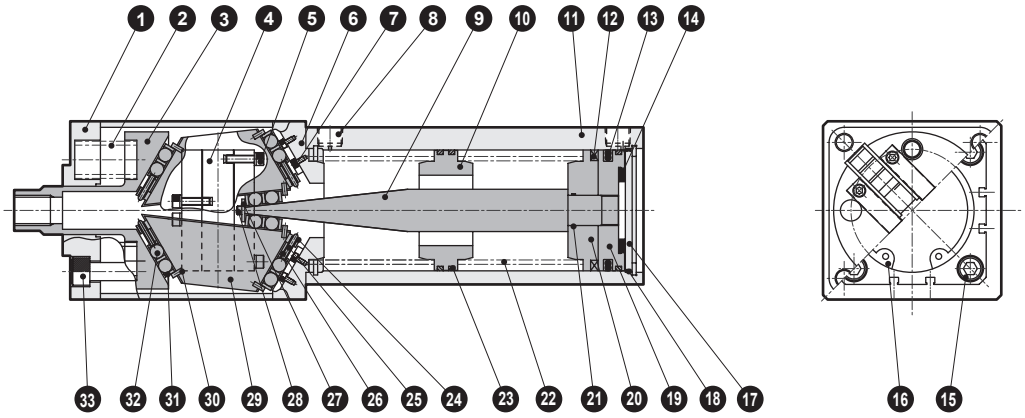

Cannot be disassembled

No.	Part name	Material	Remarks	No.	Part name	Material	Remarks
1	Rod cover (S)	Cast iron	Trivalent chromate	18	Gasket	Nitrile rubber	
2	Return spring	Steel	Black finish	19	Piston	Aluminum alloy	Alumite treatment
3	Booster rod	Alloy steel	Electroless nickel plating	20	Spacer	Aluminum alloy	Alumite treatment
4	Slide bar	Steel		21	Gasket	Nitrile rubber	
5	Hexagon socket head cap screw	Alloy steel	Black finish	22	Single acting spring	Steel	Black finish
6	Intermediate cover	Steel	Trivalent chromate	23	Wear ring (S)	Polyacetal resin	
7	Hexagon socket head cap screw	Alloy steel	Black finish	24	Spring holder	Steel	Trivalent chromate
8	Plug silencer	Steel + sintered alloy	Zinc plated	25	Spring holder pin	Stainless steel	
9	Taper rod	Alloy steel		26	Retainer spring	Steel	Black finish
10	Single acting spring holder	Steel	Trivalent chromate	27	Front plate	Steel	Trivalent chromate
11	Booster cylinder tube	Aluminum alloy	Hard alumite	28	Hexagon socket head cap screw	Alloy steel	Black finish
12	Magnet (S)	Plastic		29	Cam	Alloy steel	
13	Piston packing (S)	Nitrile rubber		30	Pin	Steel	
14	Cushion rubber	Urethane rubber		31	Retainer	Steel	Trivalent chromate
15	Hexagon socket head cap screw	Alloy steel	Black finish	32	Roller (S)	Alloy steel	
16	C-snap ring (for hole)	Steel	Black finish	33	Hexagon socket head cap screw	Alloy steel	Black finish
17	Cover	Aluminum alloy					

Note : This product cannot be disassembled.

Internal structure and parts list

● MCP-W (rapid feed + booster)

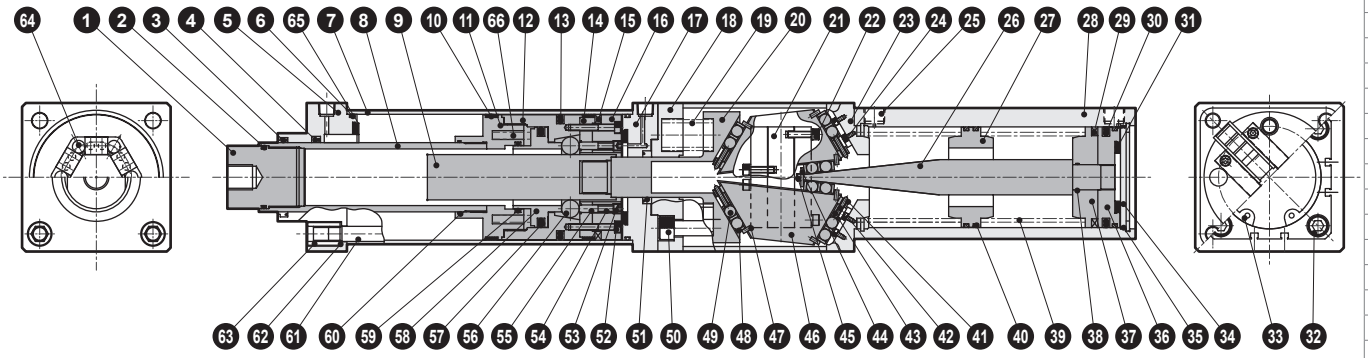

Cannot be disassembled

No.	Part name	Material	Remarks	No.	Part name	Material	Remarks
1	Plug	Steel	Trivalent chromate	34	Gasket	Nitrile rubber	
2	Gasket	Nitrile rubber		35	Cover	Aluminum alloy	
3	Dust wiper	Nitrile rubber		36	Piston	Aluminum alloy	Alumite treatment
4	Rod packing (W)	Nitrile rubber		37	Spacer	Aluminum alloy	Alumite treatment
5	Rod cover (W)	Cast iron	Trivalent chromate	38	Gasket	Nitrile rubber	
6	Gasket	Nitrile rubber		39	Single acting spring	Steel	Black finish
7	Moving cylinder tube	Aluminum alloy	Alumite treatment	40	Wear ring (S)	Polyacetal resin	
8	Piston rod	Steel	Hard chrome plating	41	Spring holder	Steel	Trivalent chromate
9	Clutch shaft	Steel		42	Spring holder pin	Stainless steel	
10	Wear ring (W)	Fiber-reinforced phenolic resin		43	Retainer spring	Steel	Black finish
11	Connection piston B	Steel	Trivalent chromate	44	Front plate	Steel	Trivalent chromate
12	Connection piston A	Alloy steel		45	Hexagon socket head cap screw	Alloy steel	Black finish
13	Piston packing (W)	Nitrile rubber		46	Cam	Alloy steel	
14	Magnet spacer A	Stainless steel		47	Pin	Steel	
15	Magnet (W)	Plastic		48	Retainer	Steel	Trivalent chromate
16	Magnet spacer B	Aluminum alloy	Alumite treatment	49	Roller (S)	Alloy steel	
17	Head cover (W)	Aluminum alloy	Alumite treatment	50	Hexagon socket head cap screw	Alloy steel	Black finish
18	Rod cover (S)	Cast iron	Trivalent chromate	51	Rod packing (S)	Nitrile rubber	
19	Return spring	Steel	Black finish	52	Hexagon socket head cap screw	Stainless steel	
20	Booster rod	Alloy steel		53	Hexagon socket set screw	Alloy steel	Black finish
21	Slide bar	Steel		54	Roller presser spring	Steel	Black finish
22	Hexagon socket head cap screw	Alloy steel	Black finish	55	Roller presser	Alloy steel	
23	Intermediate cover	Steel	Trivalent chromate	56	Roller (W)	Alloy steel	
24	Hexagon socket head cap screw	Alloy steel	Black finish	57	Release piston packing	Nitrile rubber	
25	Plug silencer	Steel + sintered alloy	Zinc plated	58	Release piston	Steel	Trivalent chromate
26	Taper rod	Alloy steel		59	Gasket	Nitrile rubber	
27	Single acting spring holder	Steel	Trivalent chromate	60	Gasket	Nitrile rubber	
28	Booster cylinder tube	Aluminum alloy	Hard alumite	61	Tie rod	Steel	Trivalent chromate
29	Magnet (S)	Plastic		62	Conical spring washer	Steel	Black finish
30	Piston packing (S)	Nitrile rubber		63	Round nut	Steel	Trivalent chromate
31	Cushion rubber (S)	Urethane rubber		64	Guide rubber	Urethane rubber	
32	Hexagon socket head cap screw	Alloy steel	Black finish	65	Cushion rubber (W)	Urethane rubber	
33	C-snap ring (for hole)	Steel	Black finish	66	Release spring	Steel	Black finish

Note : This product cannot be disassembled.

LCM
LCR
LCG
LCW
LCX
STM
STG
STS/STL
STR2
UCA2
ULK*
JSK/M2
JSG
JSC3/JSC4
USSD
UFCD
USC
UB
JSB3
LMB
LML
HCM
HCA
LBC
CAC4
UCAC2
CAC-N
UCAC-N
RCS2
RCC2
PCC
SHC
MCP
GLC
MFC
BBS
RRC
GRC
RV3*
NHS
HRL
LN
Hand
Chuk
MecHnd/Chuk
ShkAbs
FJ
FK
SpdContr
Ending

Dimensions (MCP-S)

CAD

● Basic (00)

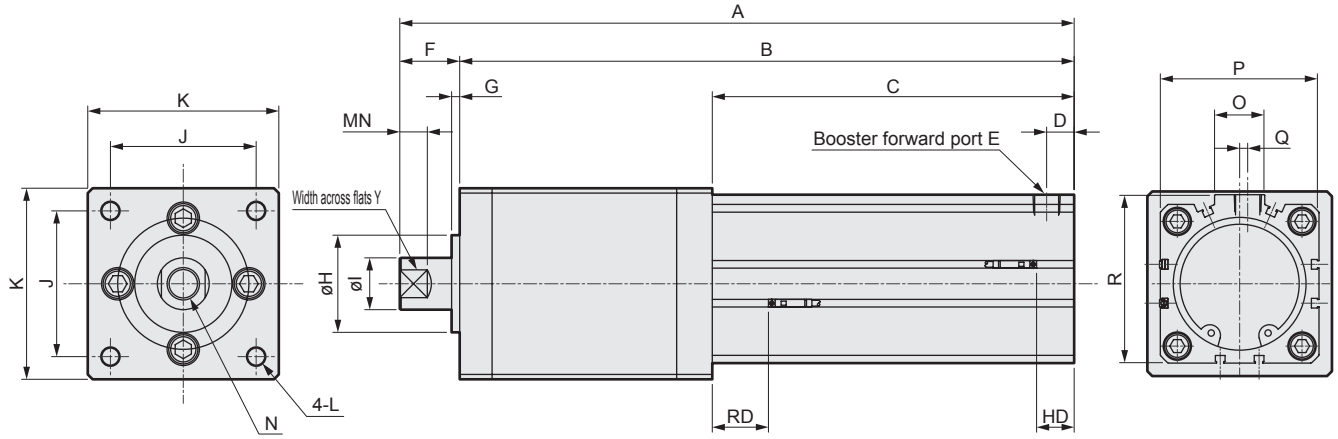

● Rod end male thread (N)

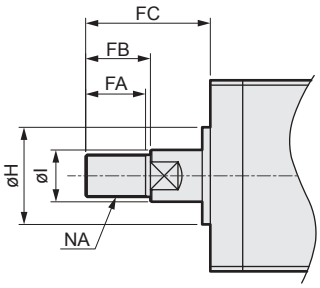

● Rod side flange (FA)

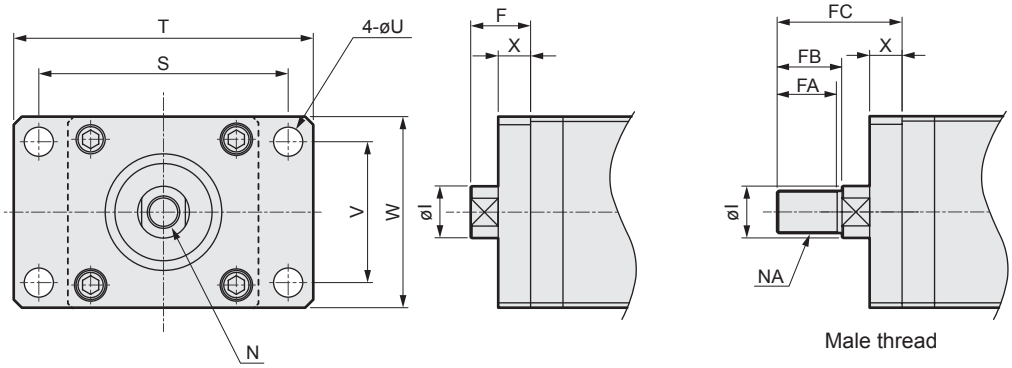

Male thread

Code / Thrust	Basic dimensions											
	A	B	C	D	E	F	G	H	I	J	K	L
2 (for 2t)	416.5	379.5	223.5	17	Rc3/8	37	5	60	32	90	118	M12 depth 20
5 (for 5t)	501	447	252	23.5	Rc3/8	54	12	100	45	128	167	M16 depth 25

Code / Thrust	Basic dimensions						
	MN	N	O	P	Q	R	Y
2 (for 2t)	17	M20 depth 24	31	98	-	104	27
5 (for 5t)	24	M30 depth 36	-	142	36	142	41

Code / Thrust	Rod side flange (FA)						Rod end male thread (N)				With switch							
											T0, T5, T2, T3		T1, T2Y, T3Y, T2J		T2W, T3W		T8	
	S	T	U	V	W	X	FA	FB	FC	NA	RD	HD	RD	HD	RD	HD	RD	HD
2 (for 2t)	154	185	18	87	118	20	37	40	77	M26x1.5	55.5	23	54.5	22	57.5	25	49.5	17
5 (for 5t)	208	250	22	126	171	30	60	63	117	M40x1.5	80.5	26	80	25	83	28	74.5	20

Dimensions (MCP-W)

CAD

● Basic (00)

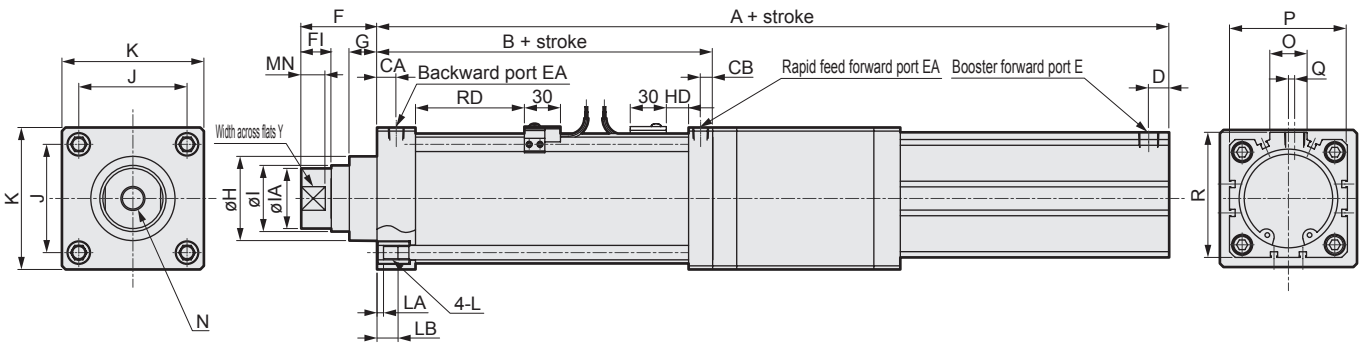

● Rod end male thread (N)

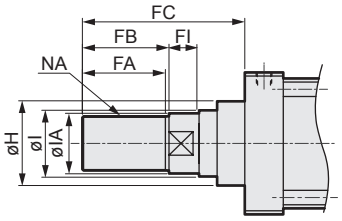

● Rod side flange (FA)

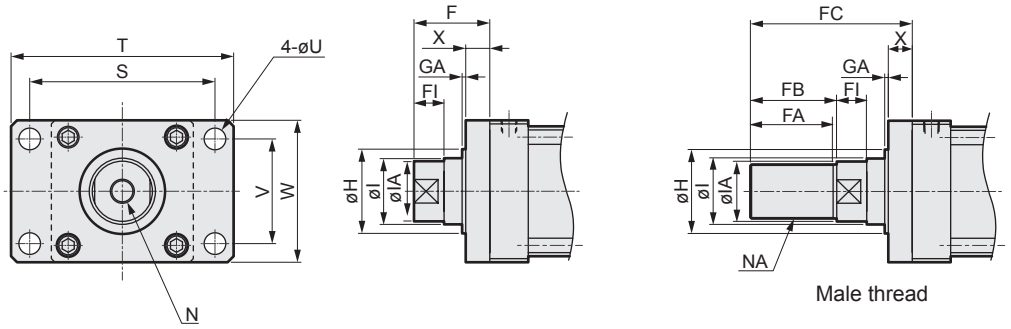

Code / Thrust	Basic dimensions																
	A	B	CA	CB	D	E	EA	F	FI	G	H	I	IA	J	K	L	LA
2 (for 2t)	559.5	180	16	10	17	Rc3/8	Rc1/4	63	25	23	70	55	50	90	118	M12	(5.4)
5 (for 5t)	692	245	24	15	23.5	Rc3/8	Rc3/8	73	30	33	110	85	80	128	167	M16	(6.5)

Code / Thrust	Basic dimensions							
	LB	MN	N	O	P	Q	R	Y
2 (for 2t)	16	20	M20 depth 24	31	98	-	104	46
5 (for 5t)	25	25	M30 depth 36	-	142	36	142	75

Code / Thrust	Rod side flange (FA)							Rod end male thread (N)				With switch							
												T0, T5, T2, T3		T1, T2Y, T3Y, T2J		T2W, T3W		T8	
	S	T	U	V	W	GA	X	FA	FB	FC	NA	RD	HD	RD	HD	RD	HD	RD	HD
2 (for 2t)	154	185	18	87	118	3	20	69	72	135	M45x1.5	105	18	104	17	107	20	99	12
5 (for 5t)	208	250	22	126	171	3	30	135	140	213	M72x2.0	140	21.5	139	21	142	24	134	16

*1 : Rapid feed section RD dimension is 15 mm short of the rod side stroke end. (Refer to page 1189.)
*2 : For RD/HD booster dimensions, refer to page 1186 (MCP-S outline drawing).

LCM
LCR
LCG
LCW
LCX
STM
STG
STS/STL
STR2
UCA2
ULK*
JSK/M2
JSG
JSC3/JSC4
USSD
UFCD
USC
UB
JSB3
LMB
LML
HCM
HCA
LBC
CAC4
UCAC2
CAC-N
UCAC-N
RCS2
RCC2
PCC
SHC
MCP
GLC
MFC
BBS
RRC
GRC
RV3*
NHS
HRL
LN
Hand
Chuk
MecHnd/Chuk
ShkAbs
FJ
FK
SpdContr
Ending

Pneumatic components

Safety Precautions

Be sure to read this section before use.

Refer to Intro Page 73 for general information of the cylinder, and to Intro Page 80 for general information of the cylinder switch.

Product-specific cautions: Mechanical Power Cylinder MCP Series

Design/selection

DANGER

- Before starting, be sure to supply air to the travel section's retract side to apply back pressure. The piston rod may pop out, which is extremely dangerous.

CAUTION

- If an external force in the direction of cylinder retraction is applied to the piston rod when the cylinder retracts after the boost, operate within the following value limits (maximum) to prevent the risk of coupling release failure or booster failure.
  MCP-W-2: 1000N or less
  MCP-W-5: 3000N or less

- When using the product for punching out or cutting workpieces, the piston rod may pop out. When the piston rod pops out, it can contact the rod cover (W) for the rapid feed section cylinder and cause impact sound or damage to the cylinder from the impact. Always use an external stopper or shock absorber within the total stroke.

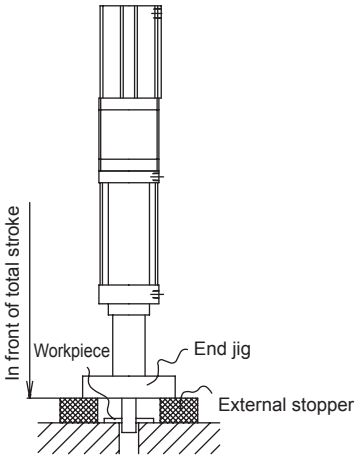

- Do not apply lateral load or eccentric load to the piston rod.
  If the cylinder is operating in a direction other than the vertical direction, the tip load will be applied to the cylinder. In this case, use a guide that prevents the load from being applied to the cylinder.

- Use the cylinder in a mechanism in which the piston rod does not rotate so that no torque is applied to the rod. Otherwise, there is a risk of coupling release failure or booster failure.

- Do not use multiple synchronized cylinders.

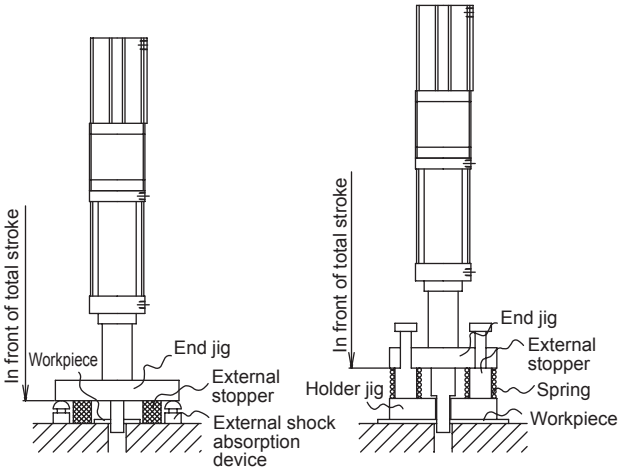

If external force is applied in the direction of the cylinder retraction due to the spring or external shock buffer when the cylinder retracts, the external force should be within the following values:
MCP-W-2: 1000N or less
MCP-W-5: 3000N or less

- After boosting, provide a time lag of 0.5 seconds or more between booster section retraction and rapid feed section retraction. If the rapid feed section retracts before the booster, the cylinder could be damaged if the booster pops out when the coupling is released. Also, do not use the booster while in the meter-out position. The cylinder could be damaged if the booster pops out when the coupling is released.

- Use discrete solenoid valves for booster and rapid feed sections. When using embedded into a manifold, be sure to take countermeasures such as using a single exhaust spacer.

- Do not advance the booster at the same time that the rapid feed section reaches the end of its travel. Coupling faults could result. Provide a time lag of one second or longer from after the rapid feed section moves forward and contacts the workpiece to when the booster section starts traveling.

- Using the product near a welder, etc., can magnetize the product, which may cause the cylinder switch to malfunction. Avoid use in an environment that may have magnetic fields.

- Because MCP-S is a single acting cylinder, the applied load (jig weight) on the piston rod end should be 20 kg or less for the 2t and 50 kg or less for the 5t.

■ When using the booster stroke, the total stroke should be well within the stroke end.

(1) If there is no external stopper
(When using the booster stroke up to the full stroke)

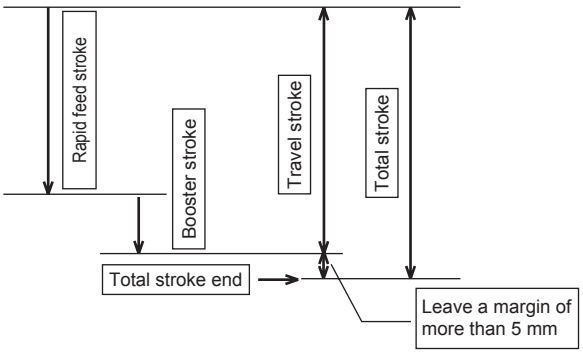

Set the total stroke so that it is greater than the sum of the travel stroke and 5 mm.
However, the travel stroke is equal to the sum of the rapid feed stroke and the booster stroke.

Applications
·Press-fitting, bending (pressing), etc.

(2) If there is an external stopper
(When not using the booster stroke up to the full stroke)

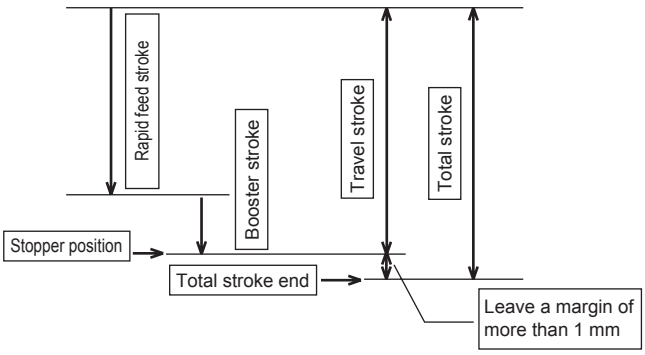

Set the external stopper so that the total stroke is greater than the sum of travel stroke and 1 mm.
However, the travel stroke is equal to the sum of the rapid feed stroke and the pressing length.

Applications
·Punching, cutting, etc.

■ The retraction end of the booster section can be detected by installing a cylinder switch on the booster section.
To install a cylinder switch, purchase only the switch body.

■ In the state where the booster section has not been allowed to completely return, if the booster is made to move forward repeatedly, damage to the booster section cylinder could result. In the case where the cycle time is short, use the cylinder switch to detect if the booster section cylinder is moving back to the end of the stroke.

■ Because there is a possibility of a failed release of connection or a run-out of the piston rod, do not use the quick exhaust valve on the head side of the rapid feed section.

■ MCP-W cannot be held in the booster state for a long period of time. Retract within roughly 60 seconds after boosting has commenced.

LCM
LCR
LCG
LCW
LCX
STM
STG
STS/STL
STR2
UCA2
ULK*
JSK/M2
JSG
JSC3/JSC4
USSD
UFCD
USC
UB
JSB3
LMB
LML
HCM
HCA
LBC
CAC4
UCAC2
CAC-N
UCAC-N
RCS2
RCC2
PCC
SHC
MCP
GLC
MFC
BBS
RRC
GRC
RV3*
NHS
HRL
LN
Hand
Chuk
MecHnd/Chuk
ShkAbs
FJ
FK
SpdContr
Ending

Design/selection

Circuit

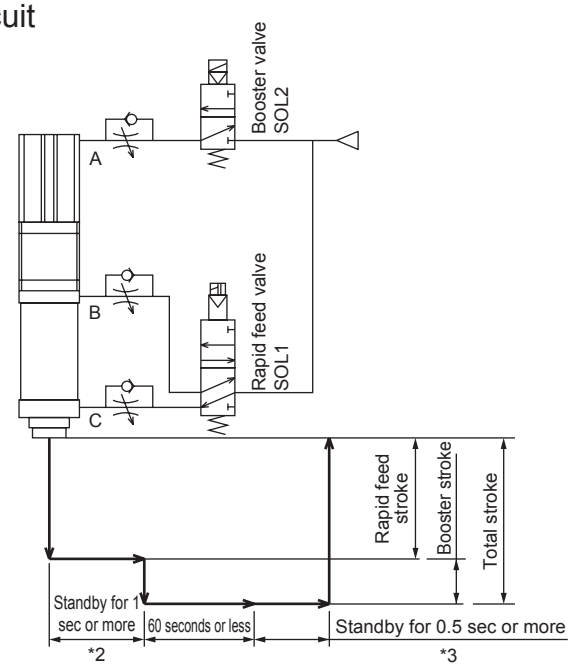

Solenoid valve / Operation status	Travel stroke SOL1	Booster stroke SOL2
Rapid feed advancement	ON	OFF
Rapid feed stroke end	ON	OFF
Standby for 1 sec or more *2	ON	OFF
Booster advancement	ON	ON
Booster retraction *1	ON	OFF
Standby for 0.5 sec or more *3	ON	OFF
Rapid feed return	OFF	OFF

*1 : Piston rod cannot be retracted while the booster section is returning.
*2 : Time required for the air to be exhausted from the rapid feed rod side and the rapid feed and booster sections to connect.
*3 : Time required for the air to be exhausted from the booster head side and the rapid feed and booster sections to release.

■ Due to the time required to couple the rapid feed section and booster section, a 1-second wait is necessary before the booster cylinder starts to advance from the rapid feed stroke end (after the rapid feed cylinder advances and stops).
If the exhaust from the rapid feed rod side is restricted as in the following cases, the wait may have to be longer than 1 second. Set the standby time with a margin of safety.
·When the solenoid valve flow volume is minimal
·When speed controller at rod side of the rapid feed cylinder is restricting flow (Fig. C above)
·When the piping for the rapid feed section is long
·When the piping diameter for the rapid feed section is narrow

■ Because the booster section is retracted before the rapid feed section, a 0.3 to 0.5-second wait is necessary from the start of booster cylinder retraction to the start of rapid feed cylinder retraction.
If the exhaust from the booster section is restricted as in the following cases, the wait may have to be longer than 0.5 seconds. Set the standby time with a margin of safety.
·When the solenoid valve flow volume is minimal
·When the piping for the booster section is long
·When the piping diameter for the booster section is narrow

■ By repeating pressurizing and exhaust of only the booster section after rapid feed, a 10 mm boost can be obtained per repeat. (Repeat boosting 3 times when 30 mm boosting is required)

[Circuit example when press-fitting 30 mm]

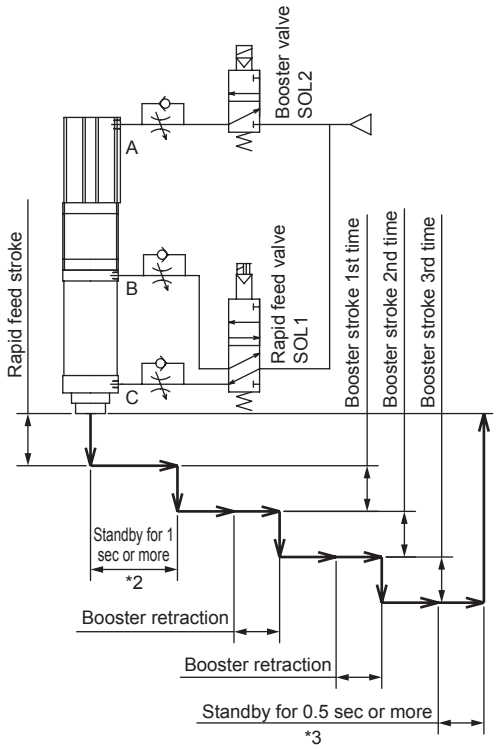

Solenoid valve / Operation status	Rapid feed stroke SOL1	Booster stroke SOL2
Rapid feed advancement	ON	OFF
Rapid feed stroke end	ON	OFF
Standby for 1 sec or more *2	ON	OFF
Booster advancement 1st time	ON	ON
Booster retraction *1	ON	OFF
Booster advancement 2nd time	ON	ON
Booster retraction *1	ON	OFF
Booster advancement 3rd time	ON	ON
Booster retraction *1	ON	OFF
Standby for 0.5 sec or more *3	ON	OFF
Rapid feed return	OFF	OFF

*1 : Piston rod cannot be retracted while the booster section is returning.
*2 : Time required for the air to be exhausted from the rapid feed rod side and the rapid feed and booster sections to connect.
*3 : Time required for the air to be exhausted from the booster head side and the rapid feed and booster sections to release.

[Operation diagram when press-fitting 30 mm]

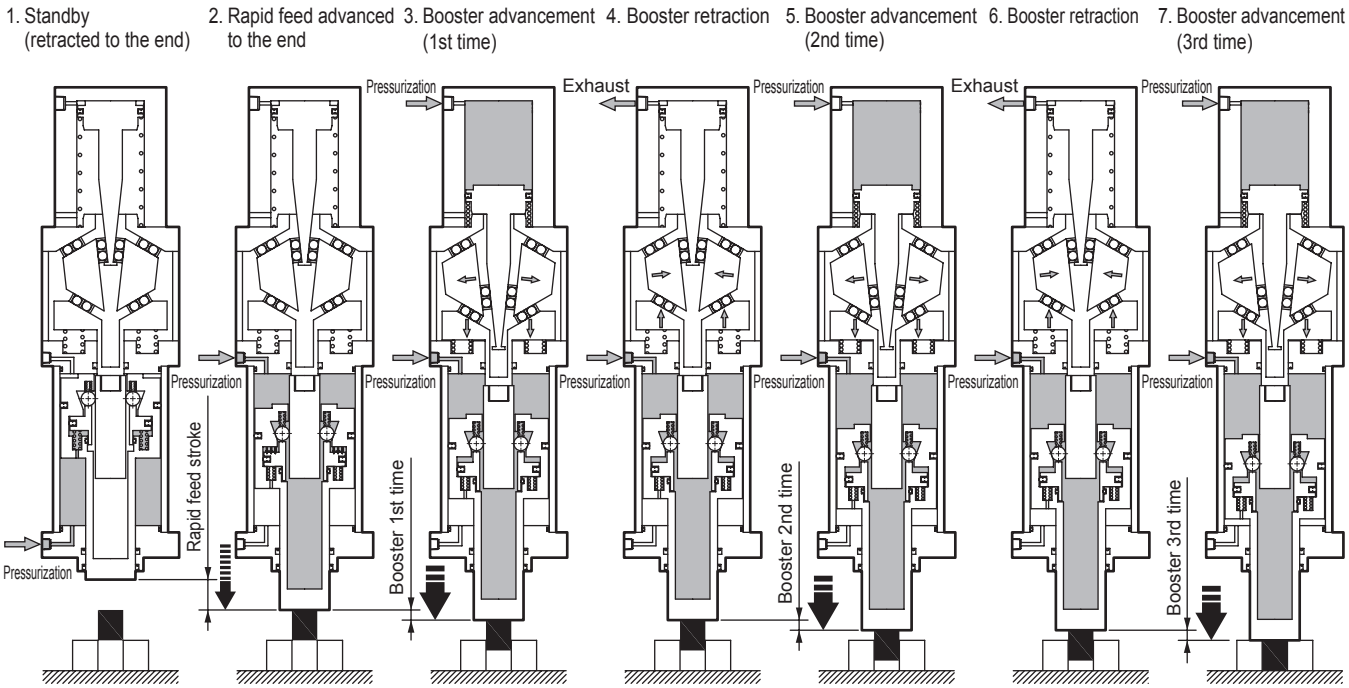

Mounting, installation and adjustment

⚠ CAUTION

- Do not disassemble the product.
- Do not lubricate the cylinder, as this may cause malfunction.
- While the mounting direction is unrestricted, if the cylinder is operating in a direction other than the vertical direction, the end load will be applied to the cylinder. In this case, use a guide that prevents the load from being applied to the cylinder.
- Tighten so that torque is not applied to the cylinder. When fixing the workpiece to the end of the piston rod, use a wrench to tighten for mounting.

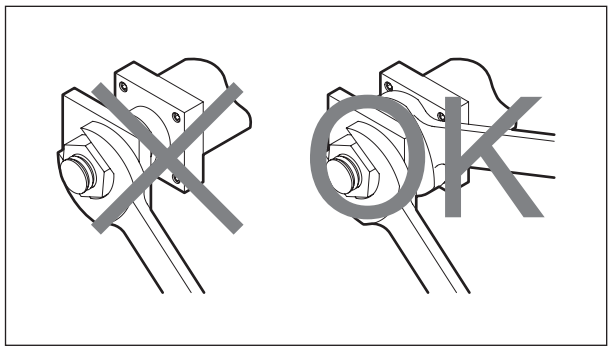

GLC

Guideless cylinder

ø40/ø50/ø63/ø80/ø100

Overview

The guideless cylinder is a compact/lightweight actuator integrated with a rotation-stop lateral load resistant structure. It contributes to FA/FMS and other automation and to labor reduction.

Features

High lateral load intensity
Large diameter piston rod is used. This enables withstanding a large lateral load.

Detecting switch available
Two types of switches can be installed: the proximity switch R type and the strong magnetic field proof switch H type. Piston position confirmation is easy.

Compact design
Rotation-stop structure integrated. A compact body is achieved.

Lightweight
Except for strength components, aluminum material is used throughout. Light weight is achieved.

CONTENTS

Product introduction	1194
Series variation	1196
● Double acting (GLC)	1198
Selection guide	1208
Technical data	1209
⚠ Safety precautions	1211

LCM
LCR
LCG
LCW
LCX
STM
STG
STS/STL
STR2
UCA2
ULK*
JSK/M2
JSG
JSC3/JSC4
USSD
UFCD
USC
UB
JSB3
LMB
LML
HCM
HCA
LBC
CAC4
UCAC2
CAC-N
UCAC-N
RCS2
RCC2
PCC
SHC
MCP
GLC
MFC
BBS
RRC
GRC
RV3*
NHS
HRL
LN
Hand
Chuk
MecHnd/Chuk
ShkAbs
FJ
FK
SpdContr
Ending

A leader with lateral loads.

A guide-less high-functioning cylinder with a rotation-stop mechanism and lateral load resistant structure. (ø40/ø50/ø63/ø80/ø100)

The CKD guideless cylinder is a compact/lightweight actuator integrated with a rotation-stop lateral load resistant structure.
It contributes to FA/FMS and other automation and to labor reduction.

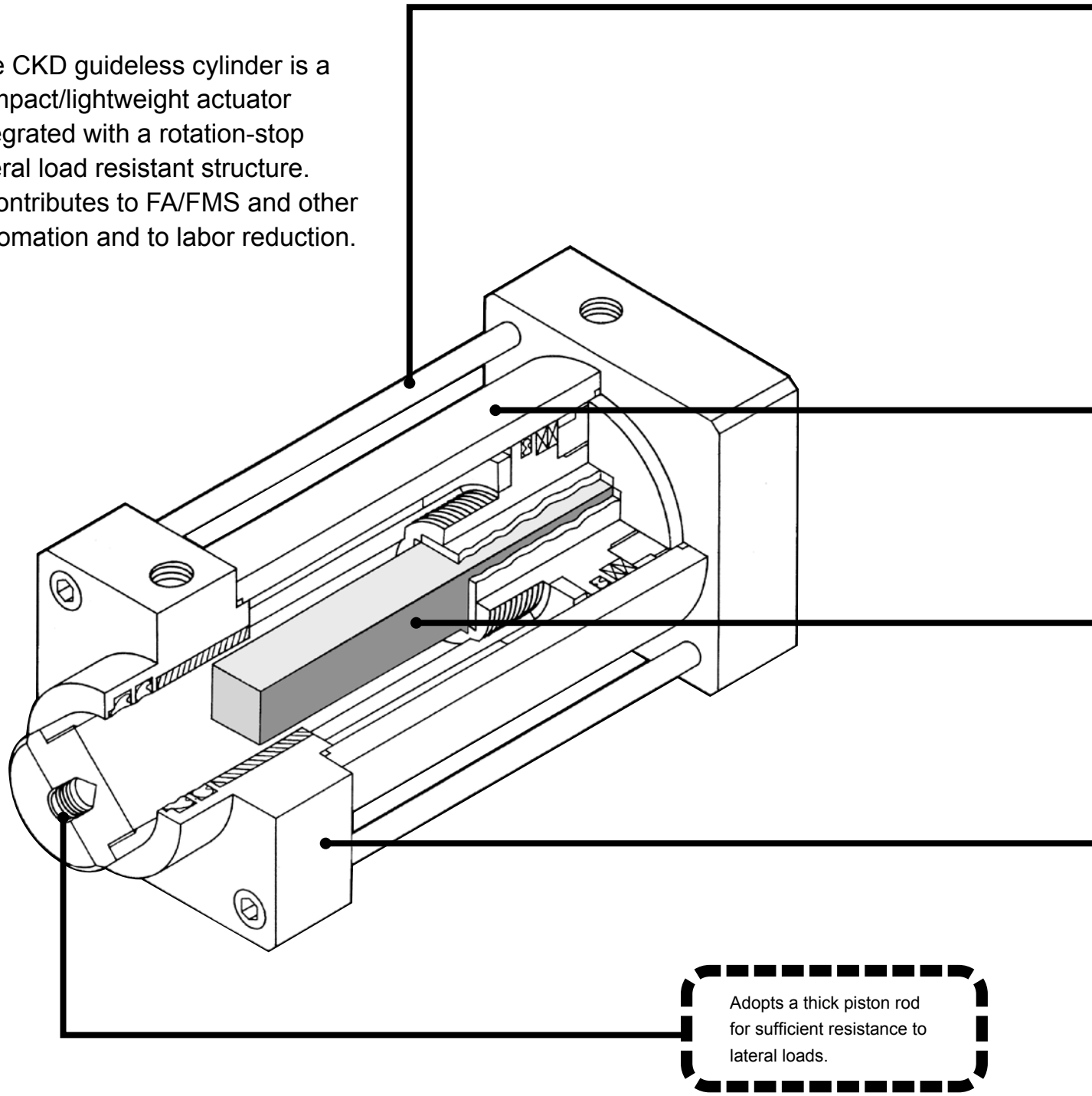

R type, H type switches mountable.
Position confirmation is easy.

● **R type switch** ● **H type switch**

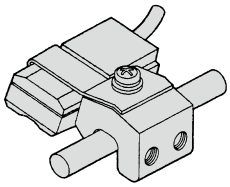

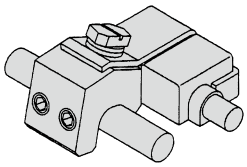

Adopts an aluminum tube.
Achieves light weight.

Built-in rotation-stop mechanism using a square rotation-stop shaft and a long rotation-stop plate (bearing). Keeps equipment more compact.

Cover and piston adopt aluminum material.
Achieves light weight.

● Rod end form can be selected

The rod end form can be selected to suit the application from female thread (blank), male thread (N) and flange (F).

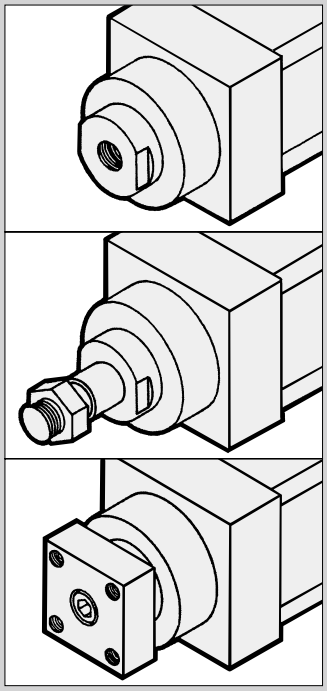

● Female thread (blank)

● Male thread (N)

● Flange (F)

High lateral load intensity

Large diameter piston rod is used. This enables withstanding a large lateral load.

Detecting switch available

Two types of switches can be installed: the proximity switch R type and the strong magnetic field proof switch H type. Piston position confirmation is easy.

Compact design

Rotation-stop structure integrated. A compact body is achieved.

Lightweight

Except for strength components, aluminum material is used throughout. Light weight is achieved.

⚠ Read the safety precautions before use.

High rigid guideless cylinder GLC Series

Variation	Model No.	Bore size (mm)	Standard stroke length (mm)					
			100	200	300	400	500	
Double acting 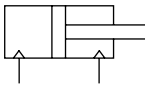	GLC	ø40/ø50/ø63	●	●	●	●	●	
		ø80	●	●	●	●	●	
		ø100	●	●	●	●	●	

LCM
LCR
LCG
LCW
LCX
STM
STG
STS/STL
STR2
UCA2
ULK*
JSK/M2
JSG
JSC3/JSC4
USSD
UFCD
USC
UB
JSB3
LMB
LML
HCM
HCA
LBC
CAC4
UCAC2
CAC-N
UCAC-N
RCS2
RCC2
PCC
SHC
MCP
GLC
MFC
BBS
RRC
GRC
RV3*
NHS
HRL
LN
Hand
Chuk
MecHnd/Chuk
ShkAbs
FJ
FK
SpdContr
Ending

● : Standard, ◎ : Option, ▒ : Not available

Stroke length (mm)				Min. stroke length	Max. stroke length	Custom stroke length	Mounting				Rod end form			Piping port position				Switch	Page
							Basic	Axial foot	Rod side flange	Head side flange	Female thread	Male thread	Flange	Top from rod side	Right from rod side	Left from rod side	Bottom from rod side		
	600	700	800	(mm)	(mm)	(per mm)	00	LB	FA	FB	Blank	N	F	Blank	R	T	S		
	▒	▒	▒	5	500	5	●	●	●	●	●	◎	◎	●	◎	◎	◎	◎	1198
	●	●	▒		700														
	●	●	●		800														

Guideless cylinder (double acting)

GLC Series

● Equivalent bore size : ø40/ø50/ø63/ø80/ø100

JIS symbol

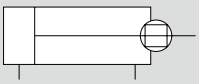

Specifications

Item	GLC				
Bore size mm	ø40	ø50	ø63	ø80	ø100
Actuation	Double acting				
Working fluid	Compressed air				
Max. working pressure MPa	1.0 (≈150 psi, 10 bar)				
Min. working pressure MPa	0.15 (≈22 psi, 1.5 bar)				
Proof pressure MPa	1.6 (≈230 psi, 16 bar)				
Ambient temperature °C	-10 (14°F) to 60 (140°F) (no freezing)				
Port size Rc	1/8	1/4		3/8	
Stroke tolerance mm	$^{+0.5}_{0}$ (Stroke length: 300 or less), $^{+1.0}_{0}$ (Stroke length: Exceeding 300)				
Working piston speed mm/s	50 to 500 (Operate within the allowable absorbed energy.)				
Cushion	Rubber cushion				
Lubrication	Not required (use turbine oil class 1 ISO VG32 if necessary for lubrication)				
Allowable absorbed energy J	0.73	1.01	2.42	4.63	9.94

Stroke length

Bore size (mm)	Standard stroke length (mm)	Max. stroke length (mm)	Min. stroke length (mm)
ø40	100, 200, 300, 400, 500	500	5
ø50			
ø63			
ø80	100, 200, 300, 400, 500, 600, 700	700	
ø100	100, 200, 300, 400, 500, 600, 700, 800	800	

*1: Refer to Ending Page 1 for detailed switch specifications and dimensions.

Min. stroke length with switch

	When mounted on the same surface		When mounted on different surfaces	
Sketch	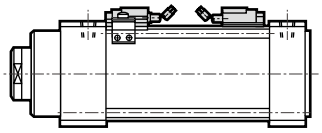		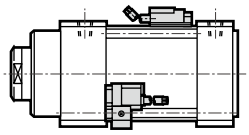	
Bore size	R type switch	H type switch	R type switch	H type switch
ø40	34	34	20	25
ø50				
ø63	20	25		
ø80				
ø100				

LCM
LCR
LCG
LCW
LCX
STM
STG
STS/STL
STR2
UCA2
ULK*
JSK/M2
JSG
JSC3/JSC4
USSD
UFCD
USC
UB
JSB3
LMB
LML
HCM
HCA
LBC
CAC4
UCAC2
CAC-N
UCAC-N
RCS2
RCC2
PCC
SHC
MCP
GLC
MFC
BBS
RRC
GRC
RV3*
NHS
HRL
LN
Hand
Chuk
MecHnd/Chuk
ShkAbs
FJ
FK
SpdContr
Ending

Switch specifications

● R type switch

Item		Proximity 2-wire		Proximity 3-wire
		R1	R2	R3
Applications		Programmable controller, relay, compact solenoid valve	Dedicated for programmable controller	For programmable controller, relay, IC circuit, solenoid valve
Output method		-		NPN output
Power supply voltage		-		4.5 VDC to 28 VDC
Load voltage		85 VAC to 265 VAC	10 to 30 VDC	30 VDC or less
Load current		5 to 100 mA	5 to 30 mA	200 mA or less
Indicator lamp		LED (Lit when ON)		
Leakage current		1 mA or less at 100 VAC 2 mA or less at 200 VAC	1 mA or less	10 μA or less
Weight g	Grommet	1 m:42 3 m:100 5 m:158		
	Terminal box	68		

Item		Reed 2-wire								
		R0			R4		R5			R6
Applications		Relay, programmable controller			For high capacity relay, solenoid valve		For programmable controller, relay, IC circuit (without indicator lamp), serial connection			Dedicated for programmable controller (with DC self-hold)
Load voltage		12/24 VDC	110 VAC	220 VAC	110 VAC	220 VAC	5/12/24 VDC	110 VAC	220 VAC	24 VDC
Load current		5 to 50 mA	7 to 20 mA	7 to 10 mA	20 to 200 mA	10 to 200 mA	50 mA or less	20 mA or less	10 mA or less	5 to 50 mA
Indicator lamp		LED (Lit when ON)			Neon lamp (Lit when OFF)		None			LED (Lit when ON)
Leakage current		0 mA			1 mA or less		0 mA			0.1 mA or less
Weight g	Grommet	1 m:42 3 m:100 5 m:158								
	Terminal box	68								

● H type switch

Item	Reed 2-wire	
	H0	
Applications	For relay, programmable controller	
Load voltage	12/24 VDC	110 VAC
Load current	5 to 50 mA	7 to 20 mA
Indicator lamp	Green LED (Lit when ON)	
Leakage current	10 μA or less	
Weight g	1 m:76 3 m:181 5 m:289	

*1 : Refer to Ending Page 1 for detailed switch specifications and dimensions.

Cylinder weight

(Unit: kg)

Bore size (mm)	Product weight when stroke length (S) = 0 mm			Switch weight	Mounting bracket weight		Additional weight per S = 50 mm	Additional weight of N type	Additional weight of F type
	Basic (00)	Axial foot (LB)	Flange (FA/FB)		T type	H type			
ø40	1.15	1.3	1.4	Refer to the weight in the switch specifications.	0.023	0.028	0.3	0.07	0.17
ø50	1.68	1.8	2.24		0.021	0.026	0.48	0.09	0.3
ø63	2.4	2.7	3.0		0.019	0.024	0.6	0.13	0.35
ø80	4.4	4.8	5.5		0.025	0.029	0.97	0.24	1.0
ø100	6.93	7.8	9.0		0.023	0.028	1.02	0.46	1.4

(Example) Product weight of GLC-00-40-200-R0-D-R

- ● Product weight for 0 mm stroke length ····· 1.15 kg
- ● Additional weight for 200 mm stroke length ····· 0.3 x $\frac{200}{50}$ = 1.2 kg
- ● Weight of 2 R0 switches ····· 0.042 x 2 = 0.084 kg
- ● Weight of 2 mounting bracket ····· 0.023 x 2 = 0.046 kg
- ● Product weight ····· 1.15 + 1.2 + 0.084 + 0.046 = 2.480 kg

LCM
LCR
LCG
LCW
LCX
STM
STG
STS/STL
STR2
UCA2
ULK*
JSK/M2
JSG
JSC3/JSC4
USSD
UFCD
USC
UB
JSB3
LMB
LML
HCM
HCA
LBC
CAC4
UCAC2
CAC-N
UCAC-N
RCS2
RCC2
PCC
SHC
MCP
GLC
MFC
BBS
RRC
GRC
RV3*
NHS
HRL
LN
Hand
Chuk
MecHnd/Chuk
ShkAbs
FJ
FK
SpdContr
Ending

How to order

● Without switch (built-in magnet for switch)

GLC - LB - 40 - 100 ——— N - R

● R type with switch (built-in magnet for switch)

GLC - LB - 40 - 100 - R0 - R - N - R

● With H type (strong magnetic field) switch (built-in magnet for switch)

GLC-L2 - LB - 40 - 100 - H0 - R - N - R

Ⓐ Mounting *1

Ⓑ Bore size

Ⓒ Stroke length

Ⓓ Switch model No.
* indicates the lead wire length.

Ⓔ Switch quantity

Ⓕ Rod end form

Ⓖ Piping port position

Code	Description
Ⓐ Mounting	
00	Basic
LB	Axial foot
FA	Rod side flange
FB	Head side flange

Ⓑ Bore size (mm)	
40	ø40
50	ø50
63	ø63
80	ø80
100	ø100

Ⓒ Stroke length (mm)

Bore size	Stroke length	Custom stroke length
ø40	**5 to 500**	**In 5 mm increments**
ø50	**5 to 500**	
ø63	**5 to 500**	
ø80	**5 to 700**	
ø100	**5 to 800**	

Ⓓ Switch model No.

Grommet	Terminal box	Contact	Voltage AC	Voltage DC	Display	Lead wire
R1*	**R1B**	Proximity	●		1-color display	2-wire
R2*	**R2B**			●		
R3*	**R3B**			●		3-wire
R0*	**R0B**	Reed	●	●	1-color display	2-wire
R4*	**R4B**		●			
R5*	**R5B**		●	●	no indicator lamp	
R6*	**R6B**			●	1-color display	
H0*	**-**		●	●	Strong magn field proof SW	2-wire

*** Lead wire length**	
Blank	1 m (standard)
3	3 m (option)
5	5 m (option)

Ⓔ Switch quantity	
R	1 on rod side
H	1 on head side
D	2
T	3
4	4 (when there are more than 4 switches, indicate switch quantity.)

Ⓕ Rod end form	
Blank	Female thread
N	Male thread
F	Flange

Ⓖ Piping port position	
Blank	Top from rod side
R	Right from rod side
T	Left from rod side
S	Bottom from rod side

⚠ Precautions for model No. selection

*1 : Mounting bracket will be shipped assembled with the product.

[Example of model No.]

GLC-LB-40-100-R0-R-N-R

Model No. : High rigid guideless cylinder (double acting)

Ⓐ Mounting : Axial foot
Ⓑ Bore size : ø40 mm
Ⓒ Stroke length : 100 mm
Ⓓ Switch model No. : Reed R0 switch, lead wire 1 m
Ⓔ Switch quantity : 1 on rod side
Ⓕ Rod end form : Male thread
Ⓖ Piping port position : Right from rod side

How to order R type switch

A) Switch body + mounting bracket

GLC - R0* - 40

- R0* → Switch model No. (Item Ⓓ on page 1200)
- 40 → Bore size (Item Ⓑ on page 1200)

B) Switch body only

SW - R0*

- R0* → Switch model No. (Item Ⓓ on page 1200)

C) Mounting bracket set (ø50 to ø100: rubber plate included)

GLC - R - 40

- 40 → Bore size (Item Ⓑ on page 1200)

D) Terminal box only

● For R□B

SW - RB

Note : When using cylinder switch R1*, R2* or R3*, place the attached rubber plate under the switch base when mounting.

No. of pcs. attached
(ø40 : 0)
ø50 : 4
ø63 : 3
ø80 : 5
ø100 : 3

How to order H type switch

A) Switch body + mounting bracket set

GLC-L2 - H0* - 40

- H0* → Switch model No. (Item Ⓓ on page 1200)
- 40 → Bore size (Item Ⓑ on page 1200)

B) Switch body only

SW - H0*

- H0* → Switch model No. (Item Ⓓ on page 1200)

C) Mounting bracket set

GLC-L2 - H - 40

- 40 → Bore size (Item Ⓑ on page 1200)

How to order mounting bracket

Bore size (mm) / Mounting bracket	ø40	ø50	ø63	ø80	ø100
Foot (LB) *1	GLC-40-LB	GLC-50-LB	GLC-63-LB	GLC-80-LB	GLC-100-LB
Flange (FA/FB)	GLC-40-FA	GLC-50-FA	GLC-63-FA	GLC-80-FA	GLC-100-FA

*1 : The foot mounting bracket is provided as 2 pcs./set.

Theoretical thrust table

(Unit: N)

Bore size (mm)	Operating direction	Working pressure MPa									
		0.15	0.2	0.3	0.4	0.5	0.6	0.7	0.8	0.9	1.0
ø40	Push	1.88×10^2	2.51×10^2	3.77×10^2	5.03×10^2	6.28×10^2	7.54×10^2	8.80×10^2	1.01×10^3	1.13×10^3	1.26×10^3
	Pull	1.14×10^2	1.53×10^2	2.30×10^2	3.06×10^2	3.83×10^2	4.59×10^2	5.36×10^2	6.13×10^2	6.89×10^2	7.66×10^2
ø50	Push	2.94×10^2	3.93×10^2	5.89×10^2	7.85×10^2	9.82×10^2	1.18×10^3	1.37×10^3	1.57×10^3	1.77×10^3	1.96×10^3
	Pull	1.50×10^2	2.00×10^2	3.00×10^2	4.01×10^2	5.01×10^2	6.01×10^2	7.01×10^2	8.01×10^2	9.01×10^2	1.00×10^3
ø63	Push	4.67×10^2	6.23×10^2	9.35×10^2	1.25×10^3	1.56×10^3	1.87×10^3	2.18×10^3	2.49×10^3	2.81×10^3	3.12×10^3
	Pull	2.79×10^2	3.72×10^2	5.58×10^2	7.44×10^2	9.30×10^2	1.12×10^3	1.30×10^3	1.49×10^3	1.67×10^3	1.86×10^3
ø80	Push	7.53×10^2	1.01×10^3	1.51×10^3	2.01×10^3	2.51×10^3	3.02×10^3	3.52×10^3	4.02×10^3	4.52×10^3	5.03×10^3
	Pull	4.59×10^2	6.13×10^2	9.19×10^2	1.23×10^3	1.53×10^3	1.84×10^3	2.14×10^3	2.45×10^3	2.76×10^3	3.06×10^3
ø100	Push	1.17×10^2	1.57×10^3	2.36×10^3	3.14×10^3	3.93×10^3	4.71×10^3	5.50×10^3	6.28×10^3	7.07×10^3	7.85×10^3
	Pull	7.53×10^2	1.01×10^3	1.51×10^3	2.01×10^3	2.51×10^3	3.02×10^3	3.52×10^3	4.02×10^3	4.52×10^3	5.03×10^3

LCM
LCR
LCG
LCW
LCX
STM
STG
STS/STL
STR2
UCA2
ULK*
JSK/M2
JSG
JSC3/JSC4
USSD
UFCD
USC
UB
JSB3
LMB
LML
HCM
HCA
LBC
CAC4
UCAC2
CAC-N
UCAC-N
RCS2
RCC2
PCC
SHC
MCP
GLC
MFC
BBS
RRC
GRC
RV3*
NHS
HRL
LN
Hand
Chuk
MecHnd/Chuk
ShkAbs
FJ
FK
SpdContr
Ending

Internal structure and parts list

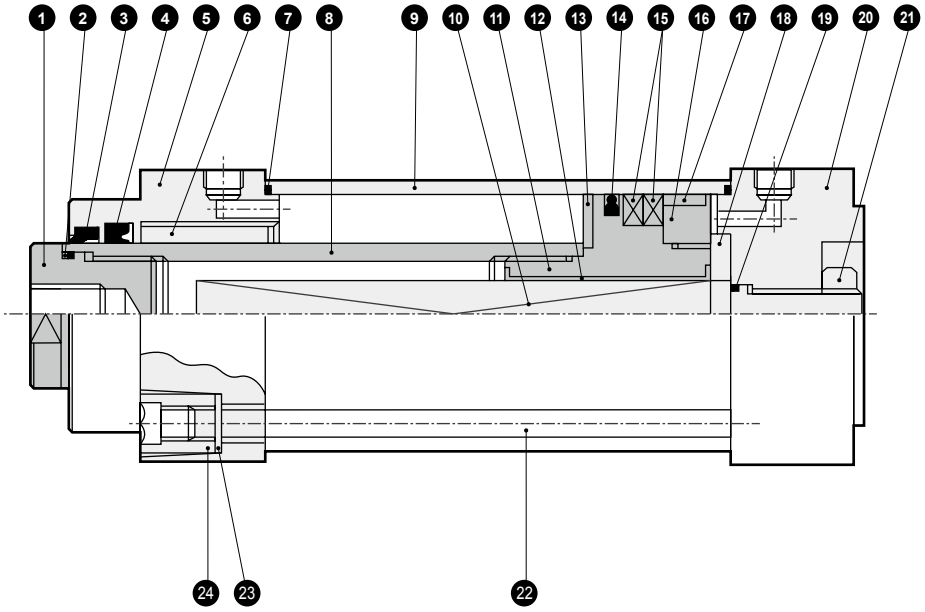

No.	Part name	Material	Remarks	No.	Part name	Material	Remarks
1	Cap	Steel	Manganese phosphate	13	Cushion rubber	Urethane rubber	
2	Gasket	Nitrile rubber		14	Piston packing	Nitrile rubber	
3	Dust wiper	Nitrile rubber		15	Magnet	Plastic	
4	Rod packing	Nitrile rubber		16	Piston (B)	Aluminum alloy	
5	Rod cover	Aluminum alloy	Black alumite	17	Wear ring	Polyacetal	
6	Bush	Copper alloy casting		18	Cushion rubber	Urethane rubber	
7	Cylinder gasket	Nitrile rubber		19	Gasket	Nitrile rubber	
8	Piston rod	Steel	Industrial chrome plating	20	Head cover	Aluminum alloy	Black alumite
9	Cylinder tube	Aluminum alloy	Hard alumite	21	Fixing nut	Steel	Zinc chromate
10	Rotation-stop shaft	Steel	Industrial chrome plating	22	Tie rod	Steel	Zinc chromate
11	Piston (A)	Aluminum alloy		23	Conical spring washer	Steel	
12	Rotation-stop plate	Oil impregnated bearing alloy		24	Round nut	Steel	Zinc chromate

Repair parts list

Bore size (mm)	Kit No.	Repair parts No.
ø40	GLC-40K	3 4 7 12 14 17
ø50	GLC-50K	
ø63	GLC-63K	
ø80	GLC-80K	
ø100	GLC-100K	

*1 : Specify the kit No. when ordering repair parts.
*2 : Steps for replacing repair parts are different from that for standard.
Refer to the guideless cylinder “Disassembly and Assembly Procedures” (SM-323965).

LCM
LCR
LCG
LCW
LCX
STM
STG
STS/STL
STR2
UCA2
ULK*
JSK/M2
JSG
JSC3/JSC4
USSD
UFCD
USC
UB
JSB3
LMB
LML
HCM
HCA
LBC
CAC4
UCAC2
CAC-N
UCAC-N
RCS2
RCC2
PCC
SHC
MCP
GLC
MFC
BBS
RRC
GRC
RV3*
NHS
HRL
LN
Hand
Chuk
MecHnd/Chuk
ShkAbs
FJ
FK
SpdContr
Ending

Dimensions

● Basic (00)

Note: The position (vertical in the diagram below) of the width across flats of the female thread (MN dimension) is not fixed, as the end cap screws into the piston rod.

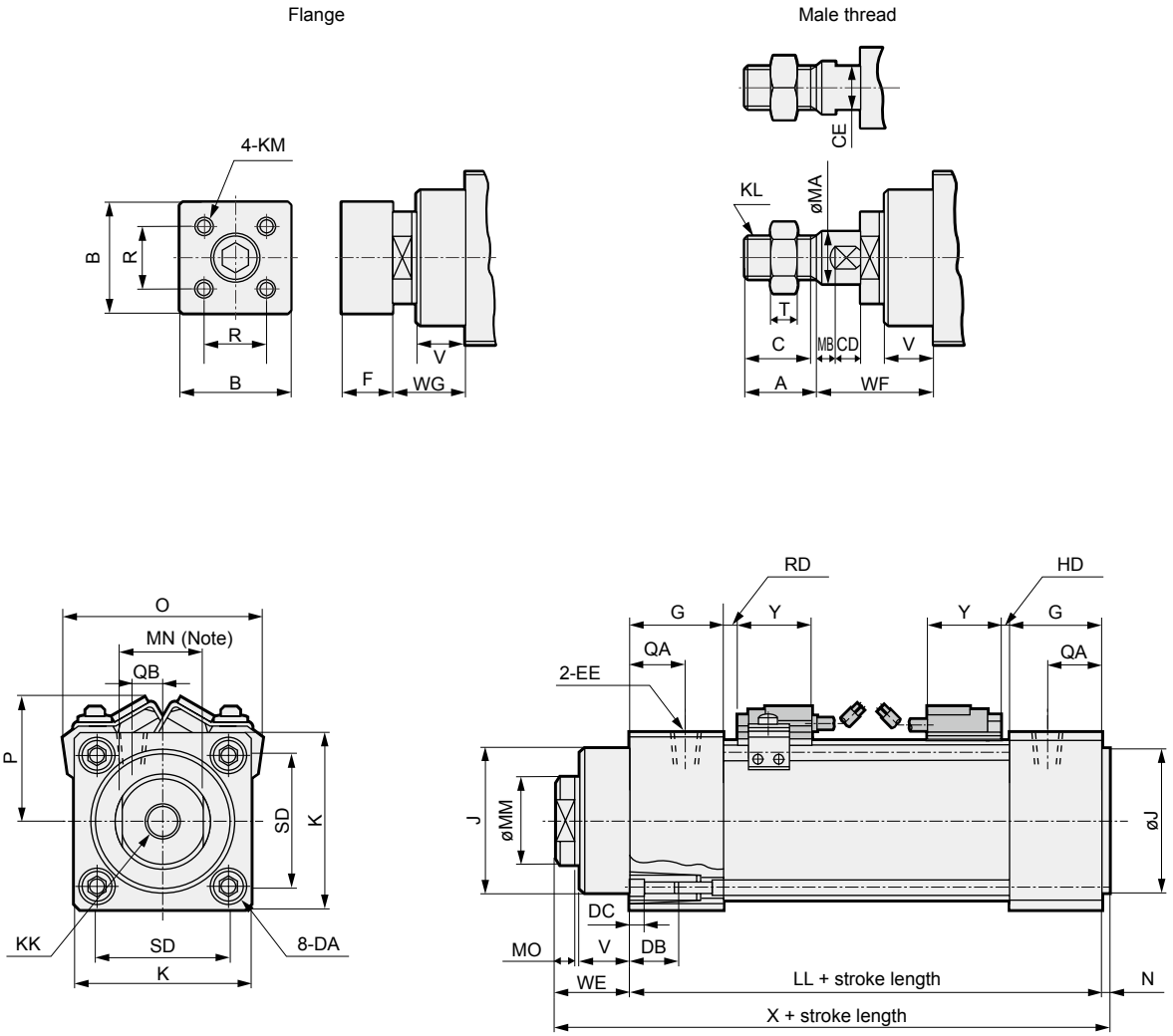

Bore size (mm)	Basic (00) basic dimensions																						
	A	B	C	CD	CE	DA	DB	DC	EE	F	G	J	K	KK	KL	KM	LL	MA	MB	MM	MN	MO	N
ø40	21.5	35	20	6.5	14	M8	12	4	Rc1/8	18	30	40	57	M10 depth 15	M14×1.5	M6	97	17	11.5	25	23	8	2
ø50	23.5	45	22	9	17	M8	12	4	Rc1/4	20	34	52	66	M12 depth 18	M16×1.5	M8	107	19	11.5	35	31	8	2
ø63	26.5	50	25	10	17	M8	12	4	Rc1/4	20	34	64	80	M14 depth 20	M18×1.5	M8	110.5	21	11.5	40	36	8	2
ø80	30	70	29	14	22	M12	16	5	Rc3/8	27	41	75	98	M18 depth 25	M22×1.5	M10	134.5	26	12	50	44	10	2
ø100	34.5	80	34	13.5	27	M12	16	5	Rc3/8	30	46	95	118	M20 depth 30	M27×2	M10	151.5	34	13.5	60	54	10	2

Bore size (mm)											R type switch							H type switch				
	QA	QB	R	SD	T	V	WE	WF	WG	X	O	P	Reed R0, R4, R5, R6		Proximity R1, R2, R3		Y	O	P	HD	RD	Y
													HD	RD	HD	RD						
ø40	18	7.5	24	40.5	8	20	35	54.5	33.5	134	66	39.5	3	0	4	0	31.5	66	39.5	4	0	33.5
ø50	20	9	32	48	10	20	35	56.5	33.5	144	74	44.5	5.5	2.5	6	3	31.5	74	44.5	6	3	33.5
ø63	22	10	36	59	11	24	39	62.5	37.5	151.5	90	51	7	4.5	7.5	5	31.5	90	51	7.5	5	33.5
ø80	25	10	50	74	13	27	44	72	42.5	180.5	114	59.5	14.5	7	15	7.5	31.5	114	59.5	15	7.5	33.5
ø100	25	10	60	90	16	27	47	77.5	45.5	200.5	128	67	18.5	8.5	19.5	10	31.5	128	67	19.5	10	33.5

LCM
LCR
LCG
LCW
LCX
STM
STG
STS/STL
STR2
UCA2
ULK*
JSK/M2
JSG
JSC3/JSC4
USSD
UFCD
USC
UB
JSB3
LMB
LML
HCM
HCA
LBC
CAC4
UCAC2
CAC-N
UCAC-N
RCS2
RCC2
PCC
SHC
MCP
GLC
MFC
BBS
RRC
GRC
RV3*
NHS
HRL
LN
Hand
Chuk
MecHnd/Chuk
ShkAbs
FJ
FK
SpdContr
Ending

Dimensions

● Axial foot (LB)

Note : The position (vertical in the diagram below) of the width across flats of the female thread (MN dimension) is not fixed, as the end cap screws into the piston rod.

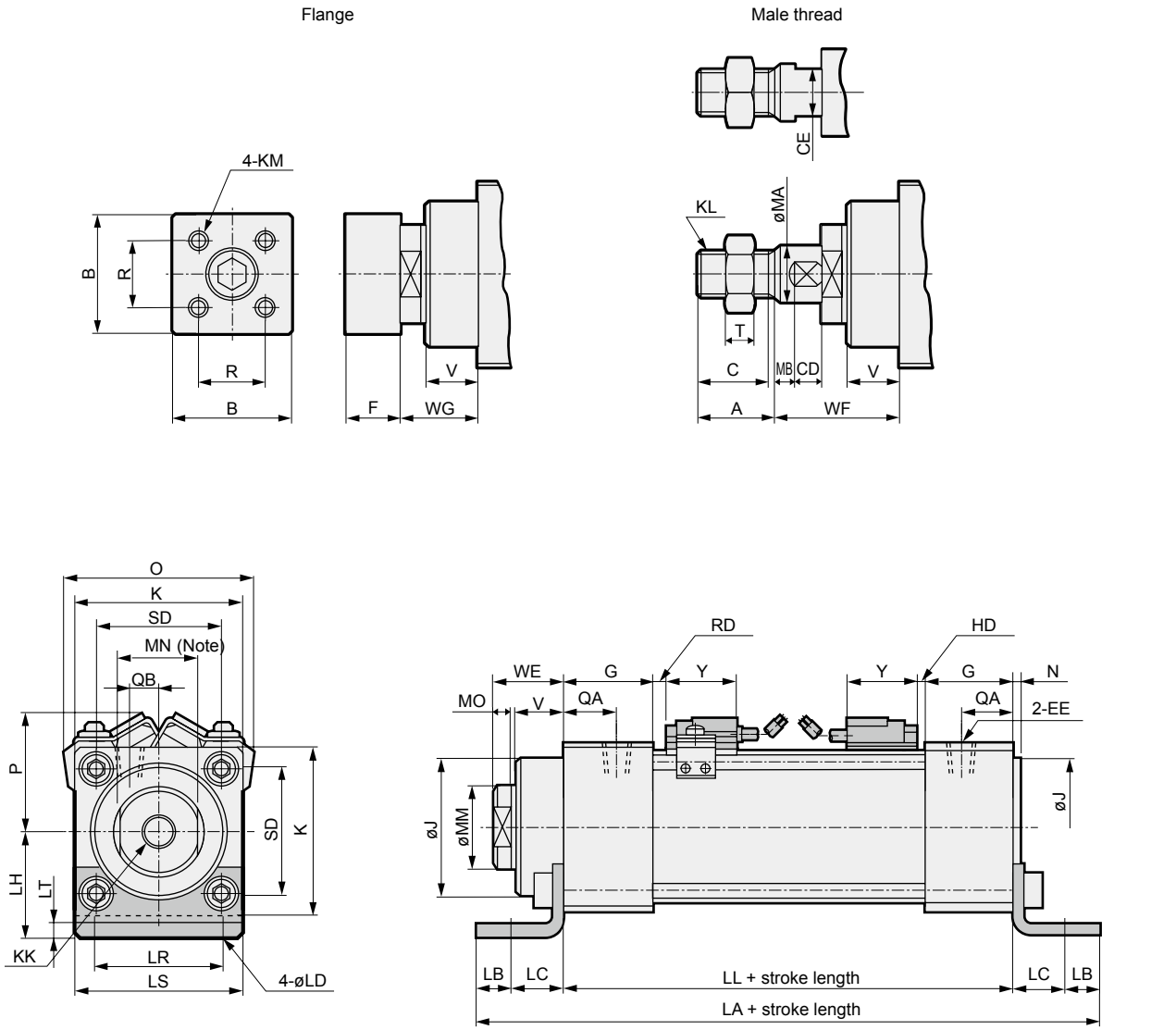

Bore size (mm)	Basic dimensions																						
	A	B	C	CD	CE	EE	F	G	J	K	KK	KL	KM	LL	MA	MB	MM	MN	MO	N	QA	QB	R
ø40	21.5	35	20	6.5	14	Rc1/8	18	30	40	57	M10 depth 15	M14×1.5	M6	97	17	11.5	25	23	8	2	18	7.5	24
ø50	23.5	45	22	9	17	Rc1/4	20	34	52	66	M12 depth 18	M16×1.5	M8	107	19	11.5	35	31	8	2	20	9	32
ø63	26.5	50	25	10	17	Rc1/4	20	34	64	80	M14 depth 20	M18×1.5	M8	110.5	21	11.5	40	36	8	2	22	10	36
ø80	30	70	29	14	22	Rc3/8	27	41	75	98	M18 depth 25	M22×1.5	M10	134.5	26	12	50	44	10	2	25	10	50
ø100	34.5	80	34	13.5	27	Rc3/8	30	46	95	118	M20 depth 30	M27×2	M10	151.5	34	13.5	60	54	10	2	25	10	60

Bore size (mm)															R type switch							H type switch				
	SD	T	V	WE	WF	WG	LA	LB	LC	LD	LH	LR	LS	LT	O	P	Reed R0, R4, R5, R6		Proximity R1, R2, R3		Y	O	P	HD	RD	Y
																	HD	RD	HD	RD						
ø40	40.5	8	20	35	54.5	33.5	156	10	19.5	9	40	40	57	3.2	66	39.5	3	0	4	0	31.5	66	39.5	4	0	33.5
ø50	48	10	20	35	56.5	33.5	175	12	22	9	40	46	66	4.5	74	44.5	5.5	2.5	6	3	31.5	74	44.5	6	3	33.5
ø63	59	11	24	39	62.5	37.5	194.5	12	30	11	50	60	80	4.5	90	51	7	4.5	7.5	5	31.5	90	51	7.5	5	33.5
ø80	74	13	27	44	72	42.5	236.5	14	37	14	60	74	98	6.0	114	59.5	14.5	7	15	7.5	31.5	114	59.5	15	7.5	33.5
ø100	90	16	27	47	77.5	45.5	255.5	21	31	14	67	80	118	6.0	128	67	18.5	8.5	19.5	10	31.5	28	67	19.5	10	33.5

LCM
LCR
LCG
LCW
LCX
STM
STG
STS/STL
STR2
UCA2
ULK*
JSK/M2
JSG
JSC3/JSC4
USSD
UFCD
USC
UB
JSB3
LMB
LML
HCM
HCA
LBC
CAC4
UCAC2
CAC-N
UCAC-N
RCS2
RCC2
PCC
SHC
MCP
GLC
MFC
BBS
RRC
GRC
RV3*
NHS
HRL
LN
Hand
Chuk
MecHnd/Chuk
ShkAbs
FJ
FK
SpdContr
Ending

Dimensions

● Rod side flange (FA)

Note: The position (vertical in the diagram below) of the width across flats of the female thread (MN dimension) is not fixed, as the end cap screws into the piston rod.

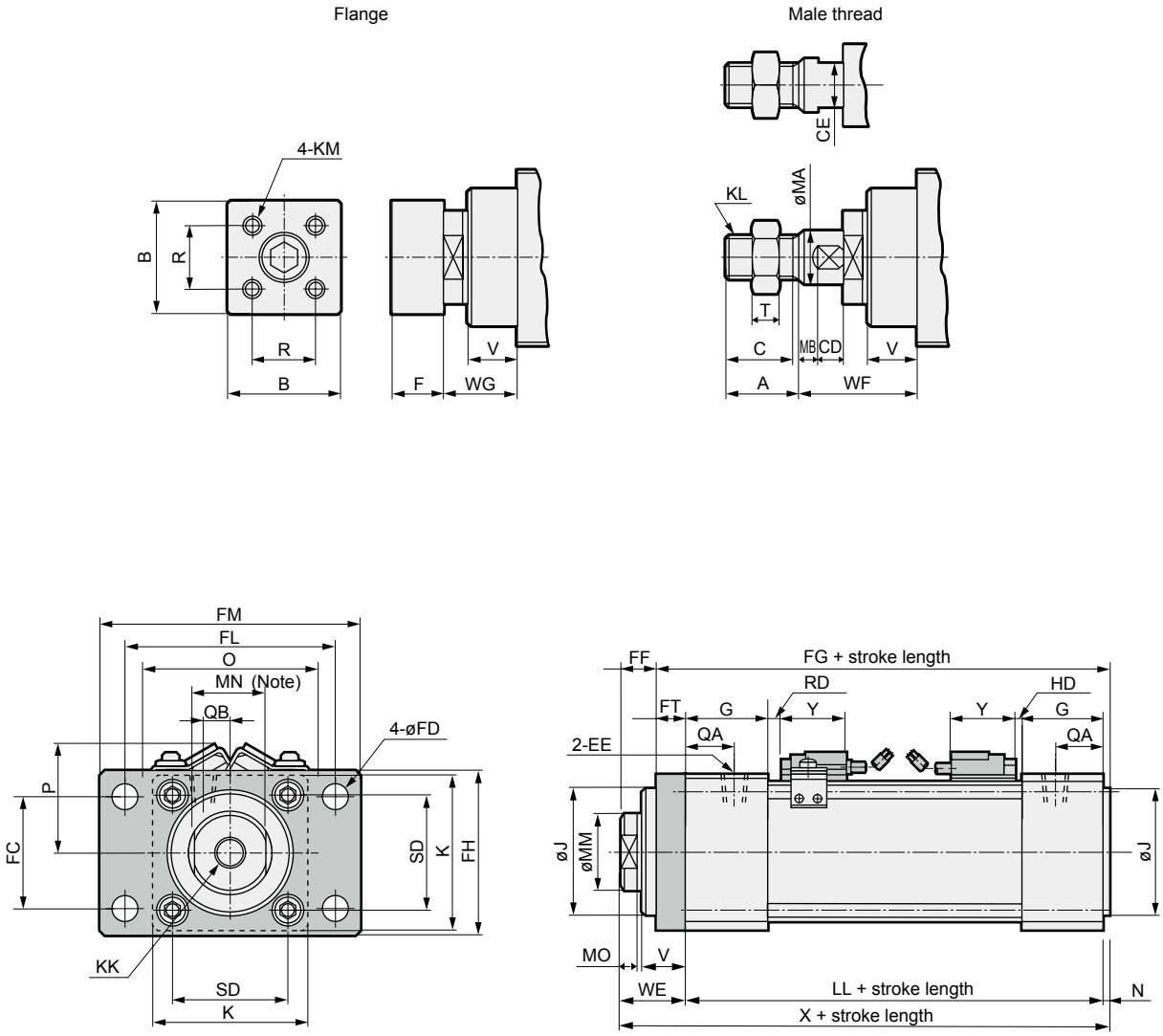

Bore size (mm)	Basic dimensions																						
	A	B	C	CD	CE	EE	F	G	J	K	KK	KL	KM	LL	MA	MB	MM	MN	MO	N	QA	QB	R	SD
ø40	21.5	35	20	6.5	14	Rc1/8	18	30	40	57	M10 depth 15	M14×1.5	M6	97	17	11.5	25	23	8	2	18	7.5	24	40.5
ø50	23.5	45	22	9	17	Rc1/4	20	34	52	66	M12 depth 18	M16×1.5	M8	107	19	11.5	35	31	8	2	20	9	32	48
ø63	26.5	50	25	10	17	Rc1/4	20	34	64	80	M14 depth 20	M18×1.5	M8	110.5	21	11.5	40	36	8	2	22	10	36	59
ø80	30	70	29	14	22	Rc3/8	27	41	75	98	M18 depth 25	M22×1.5	M10	134.5	26	12	50	44	10	2	25	10	50	74
ø100	34.5	80	34	13.5	27	Rc3/8	30	46	95	118	M20 depth 30	M27×2	M10	151.5	34	13.5	60	54	10	2	25	10	60	90

Bore size (mm)															R type switch							H type switch					
	T	V	WE	WF	WG	X	FC	FD	FF	FG	FH	FL	FM	FT	O	P	Reed R0, R4, R5, R6		Proximity R1, R2, R3		Y	O	P	HD	RD	Y	
																	HD	RD	HD	RD							
ø40	8	20	35	54.5	33.5	134	40	9	23	111	57	80	100	12	66	39.5	3	0	4	0	31.5	66	39.5	4	0	33.5	
ø50	10	20	35	56.5	33.5	144	47	9	23	121	65	85	108	12	74	44.5	5.5	2.5	6	3	31.5	74	44.5	6	3	33.5	
ø63	11	24	39	62.5	37.5	151.5	60	11	23	128.5	80	106	130	16	90	51	7	4.5	7.5	5	31.5	90	51	7.5	5	33.5	
ø80	13	27	44	72	42.5	180.5	74	14	25	155.5	98	125	153	19	114	59.5	14.5	7	15	7.5	31.5	114	59.5	15	7.5	33.5	
ø100	16	27	47	77.5	45.5	200.5	88	14	28	172.5	118	144	180	19	128	67	18.5	8.5	19.5	10	31.5	28	67	19.5	10	33.5	

LCM
LCR
LCG
LCW
LCX
STM
STG
STS/STL
STR2
UCA2
ULK*
JSK/M2
JSG
JSC3/JSC4
USSD
UFCD
USC
UB
JSB3
LMB
LML
HCM
HCA
LBC
CAC4
UCAC2
CAC-N
UCAC-N
RCS2
RCC2
PCC
SHC
MCP
GLC
MFC
BBS
RRC
GRC
RV3*
NHS
HRL
LN
Hand
Chuk
MecHnd/Chuk
ShkAbs
FJ
FK
SpdContr
Ending

Dimensions

CAD

● Head side flange (FB)

Note: The position (vertical in the diagram below) of the width across flats of the female thread (MN dimension) is not fixed, as the end cap screws into the piston rod.

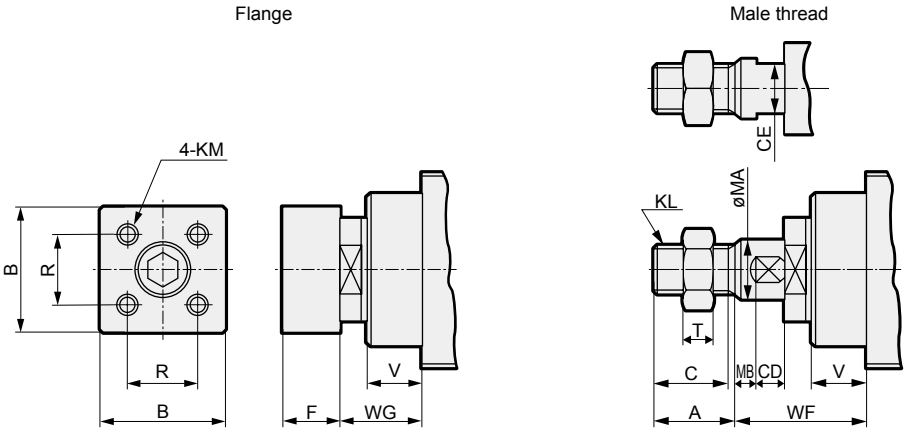

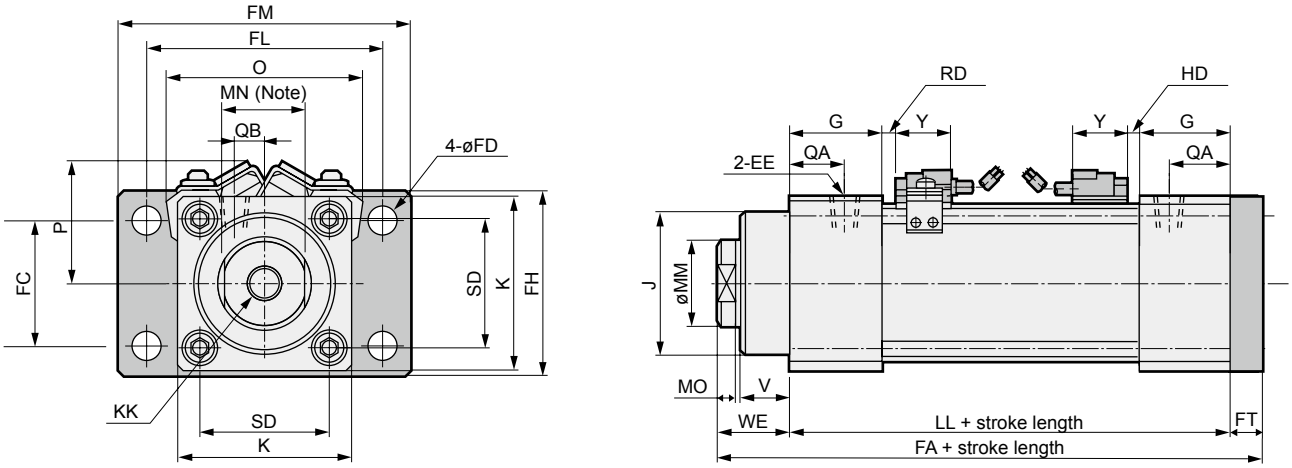

Bore size (mm)	Basic dimensions																						
	A	B	C	CD	CE	EE	F	G	J	K	KK	KL	KM	LL	MA	MB	MM	MN	MO	QA	QB	R	SD
ø40	21.5	35	20	6.5	14	Rc1/8	18	30	40	57	M10 depth 15	M14×1.5	M6	97	17	11.5	25	23	8	18	7.5	24	40.5
ø50	23.5	45	22	9	17	Rc1/4	20	34	52	66	M12 depth 18	M16×1.5	M8	107	19	11.5	35	31	8	20	9	32	48
ø63	26.5	50	25	10	17	Rc1/4	20	34	64	80	M14 depth 20	M18×1.5	M8	110.5	21	11.5	40	36	8	22	10	36	59
ø80	30	70	29	14	22	Rc3/8	27	41	75	98	M18 depth 25	M22×1.5	M10	134.5	26	12	50	44	10	25	10	50	74
ø100	34.5	80	34	13.5	27	Rc3/8	30	46	95	118	M20 depth 30	M27×2	M10	151.5	34	13.5	60	54	10	25	10	60	90

Bore size (mm)													R type switch							H type switch						
	T	V	WE	WF	WG	FA	FC	FD	FH	FL	FM	FT	O	P	Reed R0, R4, R5, R6		Proximity R1, R2, R3		Y	O	P	HD	RD	Y		
															HD	RD	HD	RD								
ø40	8	20	35	54.5	33.5	144	40	9	57	80	100	12	66	39.5	3	0	4	0	31.5	66	39.5	4	0	33.5		
ø50	10	20	35	56.5	33.5	154	47	9	65	85	108	12	74	44.5	5.5	2.5	6	3	31.5	74	44.5	6	3	33.5		
ø63	11	24	39	62.5	37.5	165.5	60	11	80	106	130	16	90	51	7	4.5	7.5	5	31.5	90	51	7.5	5	33.5		
ø80	13	27	44	72	42.5	197.5	74	14	98	125	153	19	114	59.5	14.5	7	15	7.5	31.5	114	59.5	15	7.5	33.5		
ø100	16	27	47	77.5	45.5	217.5	88	14	118	144	180	19	128	67	18.5	8.5	19.5	10	31.5	128	67	19.5	10	33.5		

MEMO

LCM
LCR
LCG
LCW
LCX
STM
STG
STS/STL
STR2
UCA2
ULK*
JSK/M2
JSG
JSC3/JSC4
USSD
UFCD
USC
UB
JSB3
LMB
LML
HCM
HCA
LBC
CAC4
UCAC2
CAC-N
UCAC-N
RCS2
RCC2
PCC
SHC
MCP
GLC
MFC
BBS
RRC
GRC
RV3*
NHS
HRL
LN
Hand
Chuk
MecHnd/Chuk
ShkAbs
FJ
FK
SpdContr
Ending

Selection guide

Conditions...stroke length χ = 300 mm, load weight m = 15 kg, eccentricity L_2 = 50 mm, distance to the center of gravity from end b = 50 mm, force F applied to rod end = m x g (N) (g = gravity acceleration 9.8 m/s^2)

(1) First, calculate lateral load moment F·L.

* Calculate dimension a by first substituting 34 (mm) of temporarily selected ø63.

L = 34 + 300 + 50 = 384(mm) = 0.384(m)
F = 15 × 9.8 = 147(N)
F·L = 147 × 0.384 = 56.4 (N·m)

(2) Calculate self-weight moment M caused by the piston rod, etc.

$$M = \frac{\chi^2}{2} \times C \times g + (a + \chi) \times D \times g$$
$$= \frac{300^2}{2} \times 4.3 \times 10^{-3} \times 9.8 + (34 + 300) \times 0.24 \times 9.8$$
= 2682 (N·mm) is approximately 2.7 (N·m)

(3) The total of (1) and (2) is lateral load moment.

F·L + M = 56.4 + 2.7 = 59.1 (N·m)

(4) Next, calculate the rotation torque F·L_2.

L_2 = 50(mm) = 0.05(m)
F = 147(N)
F·L_2 = 147 × 0.05 = 7.35 (N·m)

(5) Refer to the allowable lateral load moment table and allowable torque table on the right to check if each allowable moment value is equal to or less than the values in the tables.

Lateral load moment this time 59.1 (N·m)
Rotation torque 7.35 (N·m)

Allowable lateral load moment
ø50···92.8 N·m ····· OK
ø63···144.6 N·m ····· OK
Allowable torque
ø50···4.2 N·m ····· NG
ø63···8.8 N·m ····· OK

In this case, ø50 may be good for lateral load moment, but ø63 should be used since torque exceeds allowable values.

Make a selection such that both the lateral load moment and rotation torque are within the allowable values.

(6) The min. working pressure is the sum of the rotation torque and lateral load moment.

0.18 MPa + 0.23 MPa = 0.41 MPa

Find the operating pressure according to the graph on the following page.

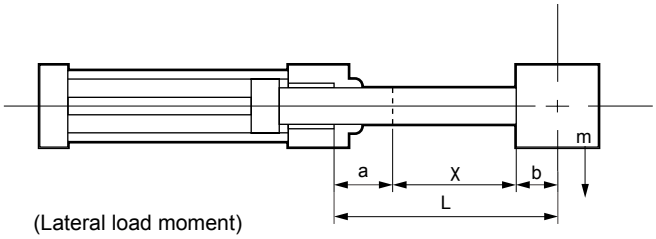

(Lateral load moment)

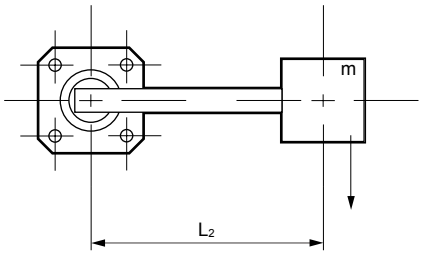

(Rotation torque)

m	:	Load weight	kg
L	=	a + χ + b	mm
χ	:	Stroke length	mm
b	:	Distance from top to load center	mm
a	:	Dimensions of projecting section	mm
M	:	Self-weight moment = $\frac{\chi^2}{2}$ x C x g + (a + χ) x D x g	
g	:	Gravity acceleration 9.8	m/s^2
C	:	Piston rod weight per unit length	kg/mm
D	:	End cap weight	kg

	ø40	ø50	ø63	ø80	ø100
a	32	34	34	36	39
C	1.3 x 10^{-3}	3.7 x 10^{-3}	4.3 x 10^{-3}	7.4 x 10^{-3}	9.7 x 10^{-3}
D	0.06	0.17	0.24	0.35	0.68

Allowable lateral load moment

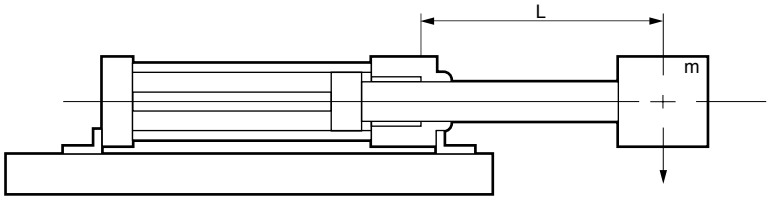

Bore size	Allowable lateral load moment
ø40	54.6 N.m
ø50	92.8 N.m
ø63	144.6 N.m
ø80	275.0 N.m
ø100	468.1 N.m

Allowable torque

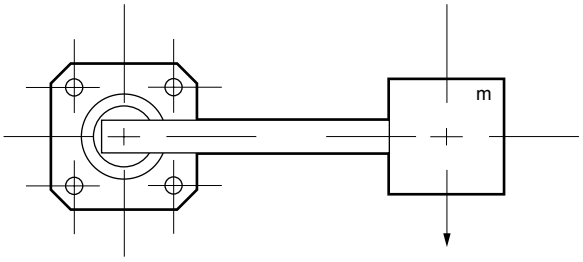

Bore size	Allowable torque
ø40	2.4 N.m
ø50	4.2 N.m
ø63	8.8 N.m
ø80	13.8 N.m
ø100	19.9 N.m

Relation between rotation torque and min. working pressure

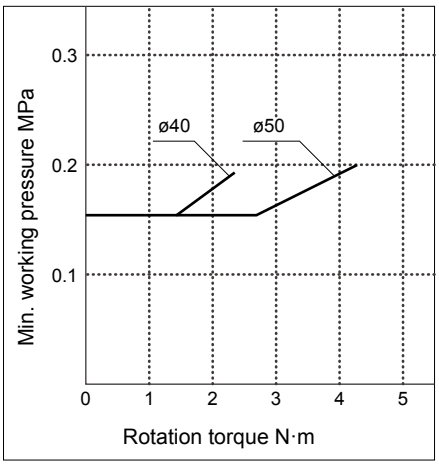

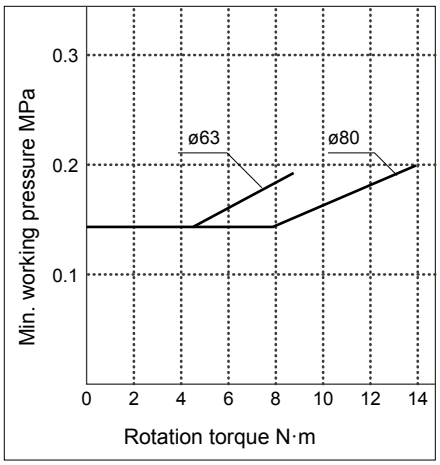

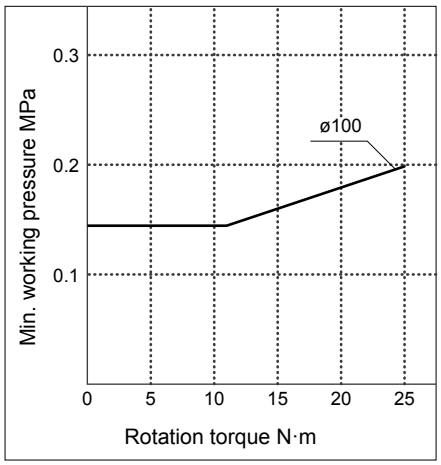

Note : Select within the allowable torque. (The ideal torque is 70% or less of the allowable torque.)

Relation between lateral load moment and min. working pressure

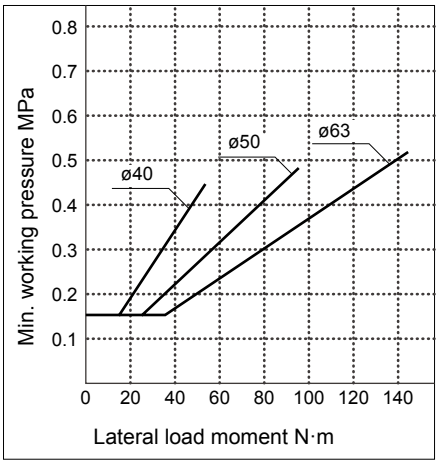

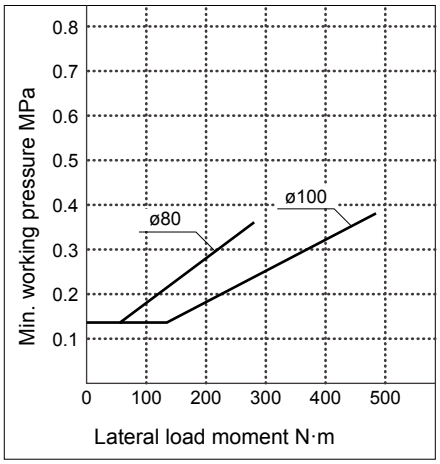

Note : Select within the allowable lateral load moment. (The ideal moment is 70% or less of the lateral load moment.)

Allowable absorbed energy

Bore size	Allowable absorbed energy J
ø40	0.73
ø50	1.01
ø63	2.42
ø80	4.63
ø100	9.94

LCM
LCR
LCG
LCW
LCX
STM
STG
STS/STL
STR2
UCA2
ULK*
JSK/M2
JSG
JSC3/JSC4
USSD
UFCD
USC
UB
JSB3
LMB
LML
HCM
HCA
LBC
CAC4
UCAC2
CAC-N
UCAC-N
RCS2
RCC2
PCC
SHC
MCP
GLC
MFC
BBS
RRC
GRC
RV3*
NHS
HRL
LN
Hand
Chuk
MecHnd/Chuk
ShkAbs
FJ
FK
SpdContr
Ending

Deflection

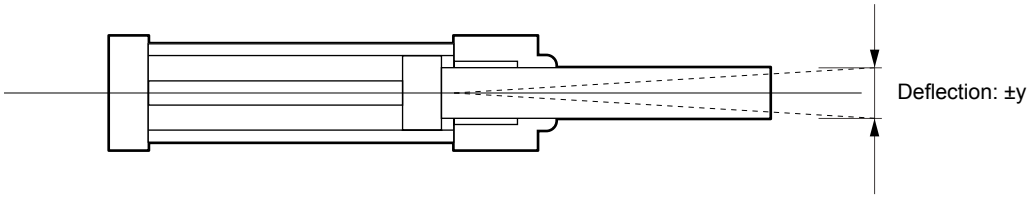

(Unit: mm)

Bore size	Deflection: ±y (default value)	Standard stroke length						
		100	200	300	400	500	600	700
ø40	y = (74 + stroke length) x 3.66 x 10^{-3}	0.64	1.00	1.37	1.73	2.10	-	-
ø50	y = (82.5 + stroke length) x 3.50 x 10^{-3}	0.64	0.99	1.34	1.69	2.04	-	-
ø63	y = (88 + stroke length) x 3.36 x 10^{-3}	0.63	0.98	1.30	1.64	1.98	-	-
ø80	y = (108 + stroke length) x 2.80 x 10^{-3}	0.58	0.86	1.14	1.42	1.70	1.98	2.26
ø100	y = (122.5 + stroke length) x 2.86 x 10^{-3}	0.64	0.92	1.21	1.50	1.78	2.07	2.35

Non-rotating accuracy

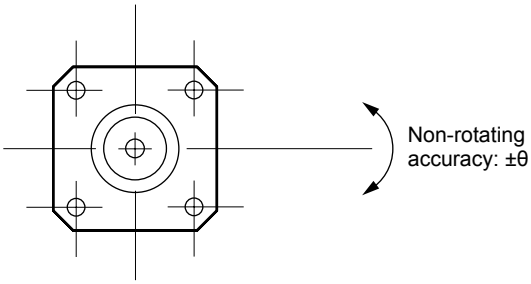

(Unit : degree)

Bore size	Non-rotating accuracy : ±θ (default value)
ø40	0.57
ø50	0.38
ø63	0.33
ø80	0.28
ø100	0.24

Pneumatic components

Safety Precautions

Be sure to read this section before use.

Refer to Intro Page 73 for general information of the cylinder, and to Intro Page 80 for general information of the cylinder switch.

Product-specific cautions: Guideless cylinder GLC Series

Mounting, installation and adjustment

WARNING

■ Cushion is provided (rubber cushion). Use within the allowable absorbed energy. The product may be damaged if allowable values are exceeded.

■ Assembling the piston rod end

When installing a jig, etc., on the end of the piston rod (female thread, male thread, flange), do not apply a torque 5 times or higher than the allowable torque to the cylinder or piston rod. Otherwise, the rotation-stop mechanism may be damaged. When connecting, fix the width across flats at the end of the rod as well as the end of the flange.

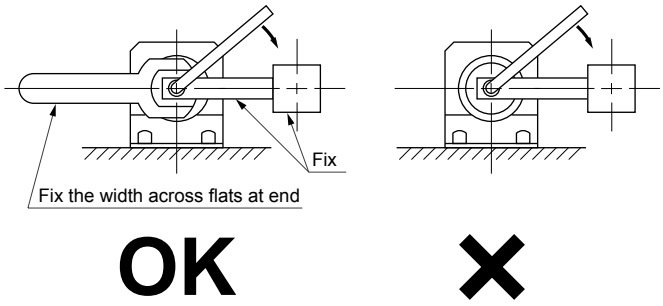

CAUTION

■ When using cylinder switch R1*, R2* or R3*, place the attached rubber plate under the switch base when mounting.

No. of pcs. attached

ø40 : 0
ø50 : 4
ø63 : 3
ø80 : 5
ø100 : 3

MFC

Robot cylinder

ø30/ø40/ø50/ø63/ø80

Special

Overview

This is a cylinder with a structure that receives applied load with the whole frame, and has rotation-stop function and high lateral load resistance.

Features

Robot cylinder (MFC)

Rotation-stop and high lateral load resistant cylinder.

Robot cylinder with brake (MFC-B)

Integrated rotation-stop structure, high lateral load resistant brake cylinder.

Robot cylinder with brake and sensor (MFC-BS)

Cylinder with rotation-stop, high lateral load resistance, braking and traveled distance detection functions.

CONTENTS

Series variation	1214
Product introduction	1216
● Double acting/single rod (MFC)	1218
● Double acting/high load (MFC-K)	1218
● Double acting/with brake (MFC-B)	1226
● Double acting/with brake/high load (MFC-BK)	1226
● Double acting/with brake sensor (MFC-BS)	1236
● Double acting/with brake sensor/high load (MFC-BSK)	1236
Technical data	1242
Selection guide	1244
Applications	1247
⚠ Safety precautions	1248

Planned for end of production
February 2022

Series variation

Robot cylinder MFC

Variation	Model No. JIS symbol	Bore size (mm)	Standard stroke (mm)					
			50	75	100	150	200	
Double acting/ single rod with switch	MFC MFC-L	ø30/ø40	●	●	●	●	●	
		ø50/ø63/ø80	●	●	●	●	●	
Double acting/ high load with switch	MFC-K MFC-KL	ø30/ø40	●	●	●	●	●	
		ø50/ø63/ø80	●	●	●	●	●	
Double acting/ with brake and switch	MFC-B MFC-BL	ø30/ø40	●	●	●	●	●	
		ø50/ø63/ø80	●	●	●	●	●	
Double acting/with brake high load with switch	MFC-BK MFC-BKL	ø30/ø40	●	●	●	●	●	
		ø50/ø63/ø80	●	●	●	●	●	
Double acting/ with brake sensor	MFC-BS	ø30/ø40	●	●	●	●	●	
		ø50/ø63/ø80	●	●	●	●	●	
Double acting/ with brake sensor, high load	MFC-BSK	ø30/ø40	●	●	●	●	●	
		ø50/ø63/ø80	●	●	●	●	●	

LCM
LCR
LCG
LCW
LCX
STM
STG
STS/STL
STR2
UCA2
ULK*
JSK/M2
JSG
JSC3/JSC4
USSD
UFCD
USC
UB
JSB3
LMB
LML
HCM
HCA
LBC
CAC4
UCAC2
CAC-N
UCAC-N
RCS2
RCC2
PCC
SHC
MCP
GLC
MFC
BBS
RRC
GRC
RV3*
NHS
HRL
LN
Hand
Chuk
MecHnd/Chuk
ShkAbs
FJ
FK
SpdContr
Ending

●: Standard ◎: Option ■ : Not available

	Min. stroke (mm)	Max. stroke (mm)	Custom stroke (per mm)	Mounting				Cushion				Switch	Page
				Basic	Rod side foot	Rod side flange	Head side flange	Without cushion	Both sides cushioned	Rod side cushioned	Head side cushioned		
300				00	LA	FA	FB	N	B	R	H		
●	5	500	5	●	●	●	●	●	●	●	●	◎	1218
●		1000		●	●	●	●	●	●	●	●		
●	5	500	5	●	●	●	●	●	●	●	●	◎	1218
●		1000		●	●	●	●	●	●	●	●		
●	5	500	5	●	●	●	●	●	●	●	●	◎	1226
●		1000		●	●	●	●	●	●	●	●		
●	5	500	5	●	●	●	●	●	●	●	●	◎	1226
●		1000		●	●	●	●	●	●	●	●		
●	5	500	5	●	●	●	●	●	●	●	●	■	1236
●		1000		●	●	●	●	●	●	●	●		
●	5	500	5	●	●	●	●	●	●	●	●	■	1236
●		1000		●	●	●	●	●	●	●	●		

LCM
LCR
LCG
LCW
LCX
STM
STG
STS/STL
STR2
UCA2
ULK*
JSK/M2
JSG
JSC3/JSC4
USSD
UFCD
USC
UB
JSB3
LMB
LML
HCM
HCA
LBC
CAC4
UCAC2
CAC-N
UCAC-N
RCS2
RCC2
PCC
SHC
MCP
GLC
MFC
BBS
RRC
GRC
RV3*
NHS
HRL
LN
Hand
Chuk
MecHnd/Chuk
ShkAbs
FJ
FK
SpdContr
Ending

Product introduction

● Easy piping
Since cylinder port (for advance, return) and brake port are integrated at this position, piping is easy.

● Excellent braking function
Unique brake mechanism enables stopping accuracy of ±1.0 mm (at 300 mm/s)
· Outstanding holding force twice the cylinder thrust (0.4 MPa)

● Rotation stop mechanism
Dry bearing is installed on rod cover. A rotation-stop mechanism like the following figure is provided.

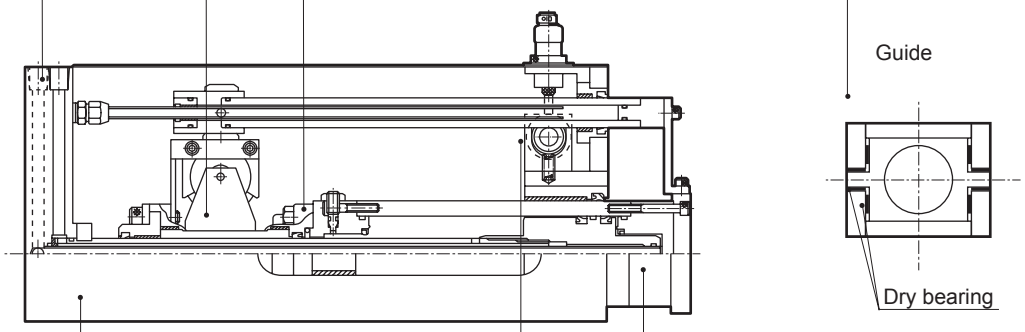

● Compact design
Compact, requiring no separate anti-rotation mechanism and no guide for lateral load.

● Detects travel distance of cylinder tube (BS type, BSK type)
The distance travelled is generated as a pulse from the rotary encoder that is directly connected to the rotator. Connection to an external controller enables detection and stop at any position.

● Resistant to lateral load
Even under heavy loads, the robust cylinder tube eliminates the necessity for the guide.
(Lateral load 10 times larger than a standard cylinder can be applied.)

MEMO

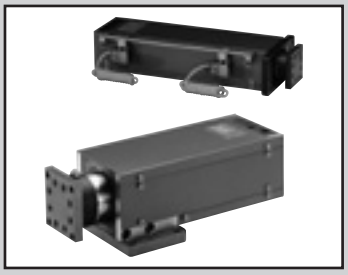

Robot cylinder Double acting/single rod
Double acting/high load

MFC/MFC-K Series

● Bore size: ø30, ø40, ø50, ø63, ø80

JIS symbol

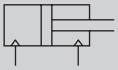

RoHS CAD

Specifications

Item		MFC/MFC-L/MFC-K/MFC-KL				
Bore size mm		ø30	ø40	ø50	ø63	ø80
Actuation		Double acting				
Working fluid		Compressed air				
Max. working pressure MPa		1.0 (≈150 psi, 10 bar)				
Min. working pressure MPa		0.15 (≈22 psi, 1.5 bar)				
Proof pressure MPa		1.6 (≈230 psi, 16 bar)				
Ambient temperature °C		-10 (14°F) to 60 (140°F) (no freezing)				
Port size		Rc1/8		Rc1/4		Rc3/8
Stroke tolerance mm		$^{+0.5}_{0}$ (Less than 350) $^{+1.0}_{0}$ (350 and over)				
Working piston speed mm/s		50 to 300 (no load)				
Cushion		Air cushion				
Effective air cushion length mm		15	13	22	22	26
Lubrication		Not required (use turbine oil class 1 ISO VG32 if necessary for lubrication)				
Allowable absorbed energy J	Cushioned	0.9	4.3	8.4	15.8	27.9
	Without cushion	Cannot absorb high energy generated by external load. We recommend using an external shock absorber.				

* Consult with CKD regarding low hydraulic specifications.

Stroke

Bore size (mm)	Standard stroke (mm)	Max. stroke (mm)	Min. stroke (mm)	Min. stroke (mm) * With switch
ø30	50/75/100/150/200/300	500	5 *2	30
ø40				
ø50		1000		
ø63				
ø80				

*1 : The custom stroke is available in 5 mm increments.
*2 : The cushion effect may not be attained if the cylinder stroke is shorter than the effective cushion length.

Switch specifications

Item		Proximity 2-wire			Proximity 3-wire	
		R1	R2	R2Y (2-color LED)	R3	R3Y (2-color LED)
Applications		Programmable controller, relay, compact solenoid valve	Dedicated for programmable controller		For programmable controller, relay, IC circuit, solenoid valve	
Output method		-			NPN output	
Power supply voltage/current		-			4.5 VDC to 28 VDC	
Load voltage/ current		85 VAC to 265 VAC 5 to 100 mA	10 VDC to 30 VDC 5 to 30 mA		30 VDC or less 200 mA or less (R3), 100 mA or less (R3Y)	
Indicator		LED (Lit when ON) (R1, R2, R3)/Red/Green LED (Lit when ON) (R2Y, R3Y)				
Leakage current		1 mA or less at 100 VAC 2 mA or less at 200 VAC	1 mA or less	1.2 mA or less	10 μA or less	
Max. shock resistance		980 m/s²				
Weight g	Grommet	1 m:42 3 m:100 5 m:158		1 m:56 3 m:114 5 m:172	1 m:42 3 m:100 5 m:158	1 m:56 3 m:114 5 m:172
	Terminal box	68		82	68	82

Item		Reed 2-wire			
		R0	R4	R5	R6
Applications		For relay, programmable controller	For high capacity relay, solenoid valve	For programmable controller, relay, IC circuit (without indicator lamp), serial connection	Dedicated for programmable controller I (with DC self-hold)
Load voltage/ current		12/24 VDC, 5 to 50 mA 110 VAC, 7 to 20 mA 220 VAC, 7 to 10 mA	110 VAC, 20 to 200 mA 220 VAC, 10 to 200 mA	5/12/24 VDC: 50 mA or less, 110 VAC: 20 mA or less, 220 VAC: 10 mA or less	24 VDC, 5 to 50 mA
Indicator		LED (Lit when ON)	Neon lamp (Lit when OFF)	No indicator lamp	LED (Lit when ON)
Leakage current		0 mA	1 mA or less	0 mA	0.1 mA or less
Max. shock resistance		294 m/s²			
Weight g	Grommet	1 m:42 3 m:100 5 m:158			
	Terminal box	68			

*1: Refer to Ending Page 1 for detailed switch specifications and dimensions.

Cylinder weight (single rod/high load)

● Single rod: MFC/MFC-L

(Unit: kg)

Bore size (mm)	Product weight when stroke (S) = 0 mm					Additional weight per S = 100 mm	Switch weight	Mounting bracket weight	Switch rail weight for 0 mm stroke	Weight of rail holding bracket			Additional weight with switch rail S = 100 mm
	Basic	Foot (LA)		Flange	Flange					5 to 200 mm	201 to 500 mm	501 to 1000 mm	
	(00)	St = under 300 mm	St ≥ 300 mm	(FA)	(FB)								
ø30	3.3	3.8	4.3	3.7	3.8	1.1	Refer to the weight in the switch specifications.	0.020	0.034	0.034	0.051	-	0.040
ø40	4.2	5.1	6.0	4.8	5.1	1.3			0.038	0.038	0.057	-	
ø50	9.3	11.1	12.9	10.5	11.1	2.5			0.049	0.052	0.078	0.130	
ø63	15.1	18.1	21.1	17.2	18.1	2.8			0.049	0.076	0.114	0.190	
ø80	29.1	34.6	40.1	33.0	34.6	4.2			0.060	0.086	0.129	0.215	

● High load: MFC-K/MFC-KL

(Unit: kg)

Bore size (mm)	Product weight when stroke (S) = 0 mm					Additional weight per S = 100 mm	Switch weight	Mounting bracket weight	Switch rail weight for 0 mm stroke	Weight of rail holding bracket			Additional weight with switch rail S = 100 mm
	Basic	Foot (LA)		Flange	Flange					5 to 200 mm	201 to 500 mm	501 to 1000 mm	
	(00)	St = under 300 mm	St ≥ 300 mm	(FA)	(FB)								
ø30	5.5	6.3	7.1	6.1	6.2	1.1	Refer to the weight in the switch specifications.	0.020	0.073	0.034	0.051	-	0.040
ø40	7.4	8.9	10.3	8.3	8.7	1.3			0.083	0.038	0.057	-	
ø50	16.4	19.1	21.8	18.0	18.9	2.5			0.110	0.052	0.078	0.130	
ø63	26.7	31.1	35.5	29.4	30.8	2.8			0.125	0.076	0.114	0.190	
ø80	48.2	55.8	63.4	52.9	55.3	4.2			0.148	0.086	0.129	0.215	

(Example) Product weight of MFC-L-FA-30B-200-R0-R

- Product weight at 0 mm stroke (mounting: FA) ..... 3.7 kg
- Additional weight per 200 mm stroke ..... 1.1x $\frac{200}{100}$ = 2.2 kg
- Switch rail weight for 0 mm stroke ..... 0.034 kg
- Rail holding bracket weight (stroke 200 mm) ..... 0.034 kg
- Switch rail additional weight for 200 mm stroke ..... 0.040x $\frac{200}{100}$ = 0.080 kg
- Weight of one RO switch ..... 0.042 kg
- Weight of 1 mounting brackets ..... 0.020 kg
- Product weight ..... 3.7 + 2.2 + 0.034 + 0.034 + 0.080 + 0.042 + 0.020 = 6.110 kg

LCM
LCR
LCG
LCW
LCX
STM
STG
STS/STL
STR2
UCA2
ULK*
JSK/M2
JSG
JSC3/JSC4
USSD
UFCD
USC
UB
JSB3
LMB
LML
HCM
HCA
LBC
CAC4
UCAC2
CAC-N
UCAC-N
RCS2
RCC2
PCC
SHC
MCP
GLC
MFC
BBS
RRC
GRC
RV3*
NHS
HRL
LN
Hand
Chuk
MecHnd/Chuk
ShkAbs
FJ
FK
SpdContr
Ending

How to order

Without switch (without magnet for switch)

MFC — 00 - 30 B - 50

With switch (built-in magnet for switch)

MFC-L - 00 - 30 B - 50 - R 0 - R

Ⓐ Model
Ⓑ Mounting *1
Ⓒ Bore size
Ⓓ Cushion
Ⓔ Stroke
Ⓕ Switch model No.
Ⓖ Switch quantity

Planned for end of production
February 2022

Code	Description
Ⓐ Model	
MFC	Basic
MFC-L	Basic with switch
MFC-K	High load
MFC-KL	High load with switch
Ⓑ Mounting	
00	Basic
LA	Rod side foot
FA	Rod side flange
FB	Head side flange
Ⓒ Bore size (mm)	
30	ø30
40	ø40
50	ø50
63	ø63
80	ø80
Ⓓ Cushion	
B	Both sides cushioned
R	Rod side cushioned
H	Head side cushioned
N	Without cushion

Ⓔ Stroke (mm)

Bore size	Stroke *2	Custom stroke
ø30	**5 to 500**	**In 5 mm increments**
ø40	**5 to 500**	
ø50	**5 to 1000**	
ø63	**5 to 1000**	
ø80	**5 to 1000**	

Ⓕ Switch model No.

Grommet-Type	Terminal box Type	Contact	Voltage AC	Voltage DC	Indicator	Lead wire
R 1*	**R1B**	Proximity	●		1-color LED	2-wire
R 2*	**R2B**	Proximity		●	1-color LED	2-wire
R 3*	**R3B**	Proximity		●	1-color LED	3-wire
R 0*	**R0B**	Reed	●	●	1-color LED	2-wire
R 4*	**R4B**	Reed	●		1-color LED	2-wire
R 5*	**R5B**	Reed	●	●	No indicator lamp	2-wire
R 6*	**R6B**	Reed		●	1-color LED	2-wire

* Lead wire length	
Blank	1 m (standard)
3	3 m (option)
5	5 m (option)

Ⓖ Switch quantity	
R	1 on rod side
H	1 on head side
D	2
T	3

⚠ Precautions for model No. selection

*1 : Mounting bracket will be shipped assembled with the product.
*2 : Refer to page 1218 for min. stroke with switch.

[Example of model No.]
MFC-L-00-30B-50-R0-R

Model: Robot cylinder
Ⓐ Model : Basic/with switch
Ⓑ Mounting : Basic
Ⓒ Bore size : ø30 mm
Ⓓ Cushion : Both sides cushioned
Ⓔ Stroke : 50mm
Ⓕ Switch model No. : Reed switch R0, lead wire length 1 m
Ⓖ Switch quantity : 1 on rod side

How to order switch

● Switch body + mounting bracket set (switch rail + rail mounting bracket + switch mounting bracket)

MFC - R0 - 30 - 200

- MFC → Model (Item Ⓐ on page 1220)
- R0 → Switch model No. (Item Ⓕ on page 1220)
- 30 → Bore size (Item Ⓒon page 1220)
- 200 → Stroke (Item Ⓔ on page 1220)

● Switch body only

SW - R0

- R0 → Switch model No. (Item Ⓕ on page 1220)

● Mounting bracket set

MFC - R - 30

- MFC → Model (Item Ⓐ on page 1220)
- R → Mounting bracket
- 30 → Bore size (Item Ⓒ on page 1220)

● Terminal box only

· For R□B

SW - RB

Theoretical thrust table

(Unit: N)

Bore size (mm)	Operating direction	Working pressure MPa									
		0.15	0.2	0.3	0.4	0.5	0.6	0.7	0.8	0.9	1.0
ø30	Push	8.85x10	$1.18x10^2$	$1.78x10^2$	$2.37x10^2$	$2.96x10^2$	$3.56x10^2$	$4.15x10^2$	$4.75x10^2$	$5.34x10^2$	$5.93x10^2$
	Pull	$1.05x10^2$	$1.41x10^2$	$2.12x10^2$	$2.82x10^2$	$3.53x10^2$	$4.24x10^2$	$4.94x10^2$	$5.65x10^2$	$6.36x10^2$	$7.06x10^2$
ø40	Push	$1.58x10^2$	$2.11x10^2$	$3.16x10^2$	$4.22x10^2$	$5.27x10^2$	$6.33x10^2$	$7.38x10^2$	$8.44x10^2$	$9.50x10^2$	$1.05x10^3$
	Pull	$1.88x10^2$	$2.51x10^2$	$3.76x10^2$	$5.02x10^2$	$6.28x10^2$	$7.53x10^2$	$8.79x10^2$	$1.00x10^3$	$1.13x10^3$	$1.25x10^3$
ø50	Push	$2.46x10^2$	$3.29x10^2$	$4.94x10^2$	$6.59x10^2$	$8.24x10^2$	$9.89x10^2$	$1.15x10^3$	$1.31x10^3$	$1.48x10^3$	$1.64x10^3$
	Pull	$2.94x10^2$	$3.92x10^2$	$5.89x10^2$	$7.85x10^2$	$9.81x10^2$	$1.17x10^3$	$1.37x10^3$	$1.57x10^3$	$1.76x10^3$	$1.96x10^3$
ø63	Push	$4.20x10^2$	$5.60x10^2$	$8.40x10^2$	$1.12x10^3$	$1.40x10^3$	$1.68x10^3$	$1.96x10^3$	$2.24x10^3$	$2.52x10^3$	$2.80x10^3$
	Pull	$4.67x10^2$	$6.23x10^2$	$9.35x10^2$	$1.24x10^3$	$1.55x10^3$	$1.87x10^3$	$2.18x10^3$	$2.49x10^3$	$2.80x10^3$	$3.11x10^3$
ø80	Push	$6.80x10^2$	$9.07x10^2$	$1.36x10^3$	$1.81x10^3$	$2.26x10^3$	$2.72x10^3$	$3.17x10^3$	$3.62x10^3$	$4.08x10^3$	$4.53x10^3$
	Pull	$7.52x10^2$	$1.00x10^3$	$1.50x10^3$	$2.01x10^3$	$2.51x10^3$	$3.01x10^3$	$3.51x10^3$	$4.02x10^3$	$4.52x10^3$	$5.02x10^3$

LCM
LCR
LCG
LCW
LCX
STM
STG
STS/STL
STR2
UCA2
ULK*
JSK/M2
JSG
JSC3/JSC4
USSD
UFCD
USC
UB
JSB3
LMB
LML
HCM
HCA
LBC
CAC4
UCAC2
CAC-N
UCAC-N
RCS2
RCC2
PCC
SHC
MCP
GLC
MFC
BBS
RRC
GRC
RV3*
NHS
HRL
LN
Hand
Chuk
MecHnd/Chuk
ShkAbs
FJ
FK
SpdContr
Ending

Internal structure and parts list (double acting/single rod / double acting/high load)

● MFC

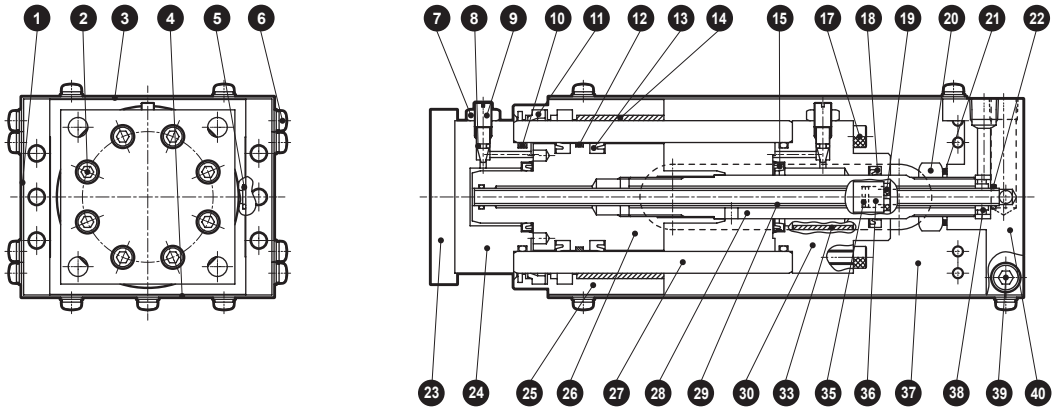

● MFC-K

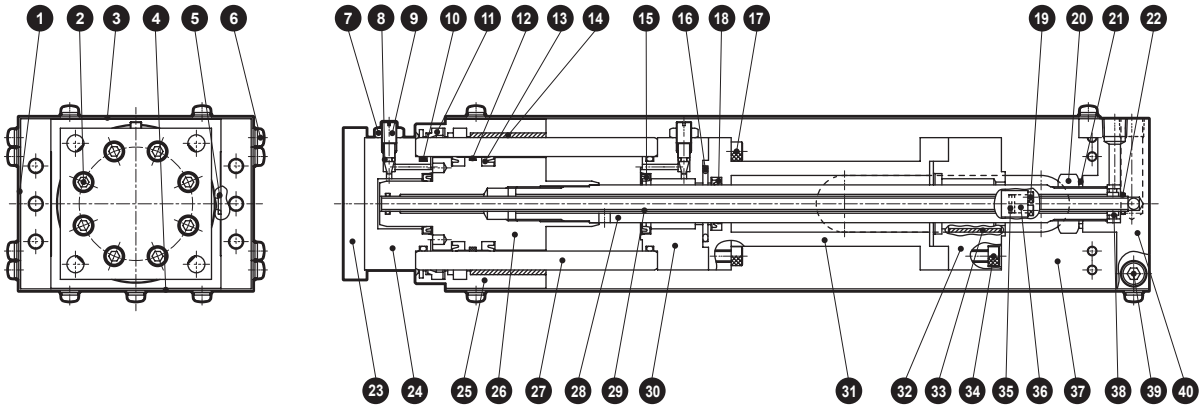

No.	Part name	Material	Remarks	No.	Part name	Material	Remarks
1	Middle cover	Aluminum plate		21	Seal washer	Nitrile rubber, steel	
2	Hexagon socket head cap screw	Steel		22	Gasket	Nitrile rubber	
3	Top cover	Steel plate		23	Head flange	Steel	
4	Bottom cover	Steel plate		24	Head cover	Cast iron	
5	Gasket	Nitrile rubber		25	Bearing housing	Cast iron	
6	Cross-recessed pan head screw, captive washer	Steel		26	Piston	Aluminum alloy	
7	Needle nut	Steel		27	Cylinder tube	Aluminum alloy	
8	Gasket	Nitrile rubber		28	Piston rod	Steel	
9	Cushion needle	Copper alloy		29	Pipe	Stainless steel	
10	Gasket	Nitrile rubber		30	Rod cover	Cast iron	
11	Dust wiper	Nitrile rubber		31	Packing holder	Steel	
12	Wear ring	Polyacetal resin		32	Guide cover	Cast iron	
13	Piston packing	Nitrile rubber		33	Rotation-stop plate	Dry bearing	
14	Bush	Dry bearing		34	Hexagon socket head cap screw	Steel	
15	Cushion packing	Nitrile rubber, steel		35	Magnet	Rare-earth	With switch only
16	Gasket	Nitrile rubber		36	Magnet holder	Aluminum alloy	With switch only
17	Hexagon socket head cap screw	Steel		37	Side guide	Steel	
18	Rod packing	Nitrile rubber		38	Pipe guide	Aluminum alloy	
19	Hexagon socket head cap screw	Steel	With switch only	39	Hexagon socket head cap screw	Steel	
20	Hexagon nut	Steel		40	Fixed guide	Cast iron	

Repair parts list

Bore size (mm)	Kit No.	Repair parts No.
ø30	MFC-30K	12 13
ø40	MFC-40K	
ø50	MFC-50K	
ø63	MFC-63K	15 18
ø80	MFC-80K	

LCM
LCR
LCG
LCW
LCX
STM
STG
STS/STL
STR2
UCA2
ULK*
JSK/M2
JSG
JSC3/JSC4
USSD
UFCD
USC
UB
JSB3
LMB
LML
HCM
HCA
LBC
CAC4
UCAC2
CAC-N
UCAC-N
RCS2
RCC2
PCC
SHC
MCP
GLC
MFC
BBS
RRC
GRC
RV3*
NHS
HRL
LN
Hand
Chuk
MecHnd/Chuk
ShkAbs
FJ
FK
SpdContr
Ending

Dimensions CAD

● MFC-(K) basic (00)

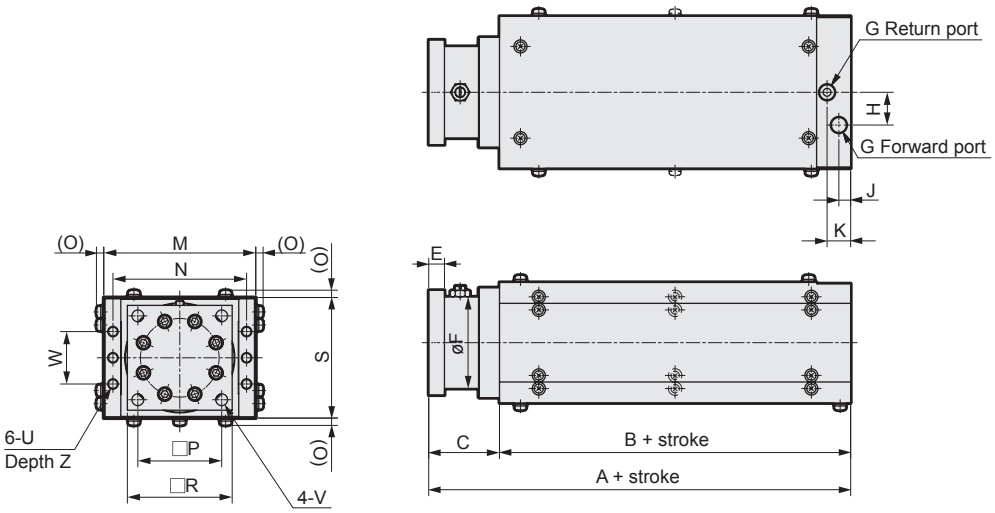

Code / Bore size (mm)	Basic (00) basic dimensions																	
	A	Ⓐ	B	Ⓑ	C	E	F	G	H	J	K	M	Ⓜ	N	Ⓝ	O	P	R	S
ø30	151	249	120	218	31	8	45	Rc1/8	20	8	15	80	86	69	72	5	40	52	62
ø40	172	286	132	246	40	10	55	Rc1/8	20	8	16	90	96	79	82	5	50	63	72
ø50	222	376	168	322	54	12	70	Rc1/4	25	9	18	116	124	102	106	6	64	80	92
ø63	251	449	188	386	63	16	85	Rc1/4	25	9	18	136	144	122	126	6	80	100	112
ø80	298	522	225	449	73	19	110	Rc3/8	35	14	28	174	180	156	156	6	100	125	142

Code / Bore size (mm)	Basic (00) basic dimensions				
	U	V	W	Z	Ⓩ
ø30	M 6	7	30	10	12
ø40	M 6	7	35	10	12
ø50	M 8	9	40	12	15
ø63	M10	11	58	15	18
ø80	M12	14	80	18	20

*1 : Codes with ○ indicate dimensions of high load.

● MFC-(K)L (with robot cylinder switch) basic

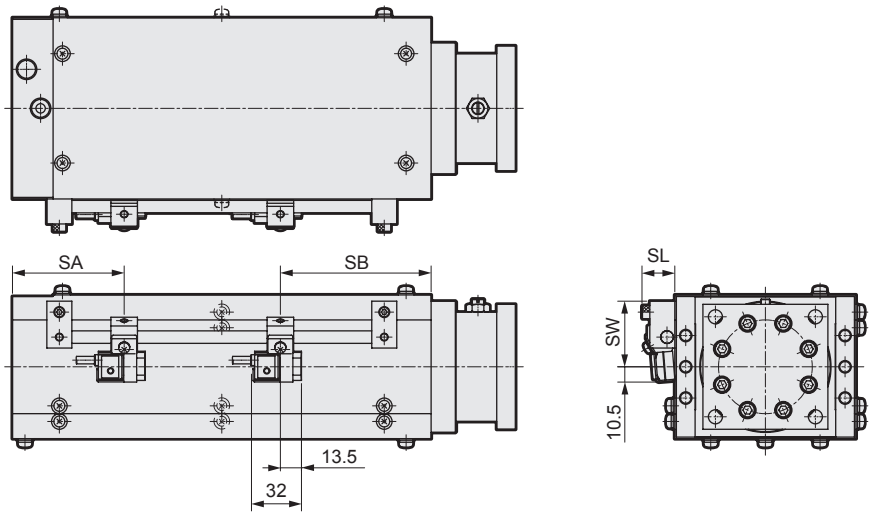

Unit: mm

Code / Bore size (mm)	SW	SL	SA	SB	Ⓢ⓫
ø30	31	20	50.5	69.5	167.5
ø40	35	20	55	77	191
ø50	42	21	71.5	96.5	250.5
ø63	52	21	68.5	119.5	317.5
ø80	59	21	92.5	132.5	356.5

*1 : Codes with ○ indicate dimensions of high load.

Dimensions

● Rod side foot (LA)

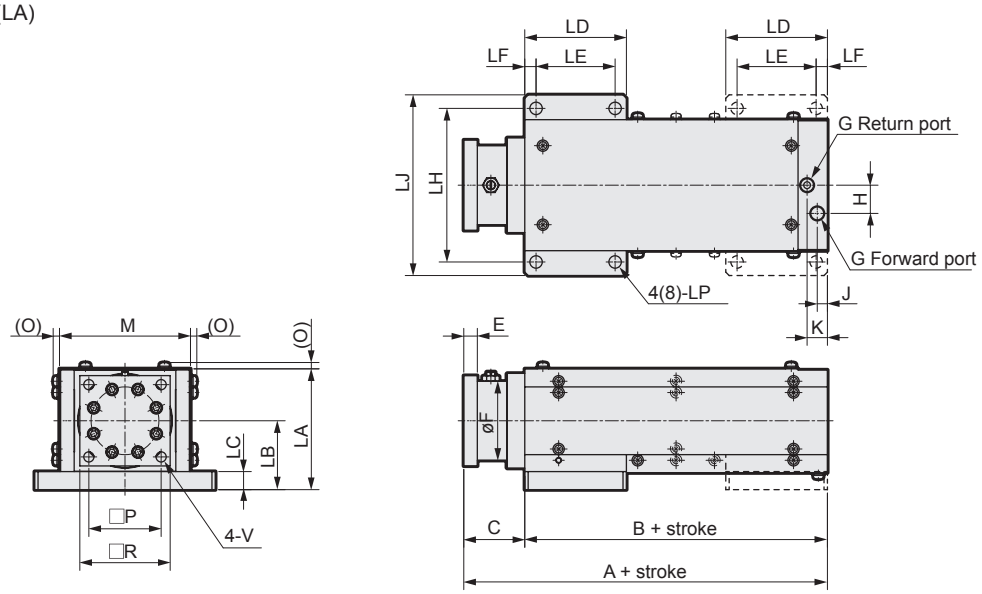

Note: Refer to page 1223 for switch dimensions with switch.

Code / Bore size (mm)	A	Ⓐ	B	Ⓑ	C	E	F	G	H	J	K	M	Ⓜ	O	P	R	V	LA	Ⓛ	LB
ø30	151	249	120	218	31	8	45	Rc1/8	20	8	15	80	86	5	40	52	7	71	73	40
ø40	172	286	132	246	40	10	55	Rc1/8	20	8	16	90	96	5	50	63	7	83	87	47
ø50	222	376	168	322	54	12	70	Rc1/4	25	9	18	116	124	6	64	80	9	107	110	61
ø63	251	449	188	386	63	16	85	Rc1/4	25	9	18	136	144	6	80	100	11	130	133	74
ø80	298	522	225	449	73	19	110	Rc3/8	35	14	28	174	180	6	100	125	14	163	166	92

Code / Bore size (mm)	LB	LC	Ⓛ	LD	Ⓛ	LE	Ⓛ	LF	Ⓛ	LH	Ⓛ	LJ	Ⓛ	LP	Ⓛ
ø30	42	10	12	60	70	46	50	7	10	90	104	106	124	7	9
ø40	51	12	16	70	80	50	54	10	13	114	120	134	146	9	11
ø50	64	16	19	90	100	70	70	10	15	136	152	160	182	11	14
ø63	77	19	22	110	120	86	84	12	18	162	178	190	214	14	16
ø80	95	22	25	140	150	114	110	13	20	200	218	236	258	16	18

*1 : Codes with ◯ indicate dimensions of high load.
*2 : The following strokes include the cushion stroke.
For ø30.....300 mm or more
For ø40.....300 mm or more
For ø50.....400 mm or more
For ø63.....500 mm or more
For ø80.....500 mm or more

● Rod side flange (FA)

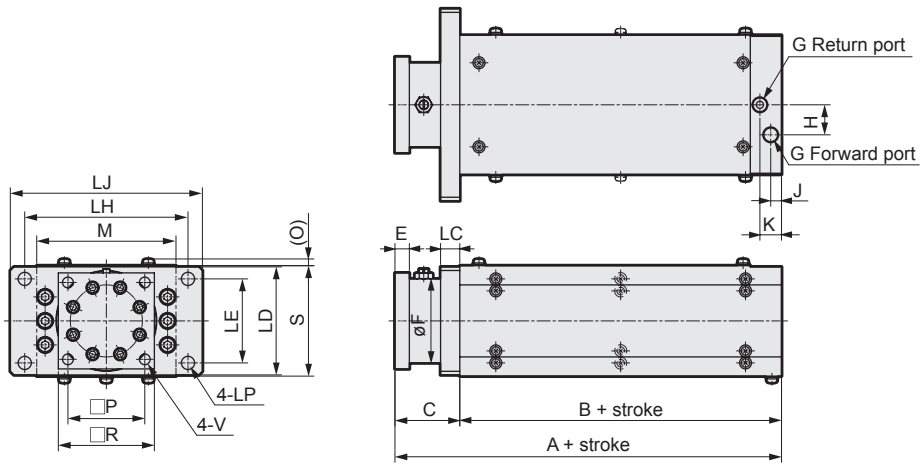

Note: Refer to page 1223 for switch dimensions with switch.

Code / Bore size (mm)	A	Ⓐ	B	Ⓑ	C	E	F	G	H	J	K	M	Ⓜ	O	P	R	S	V	LC	Ⓛ
ø30	151	249	120	218	31	8	45	Rc1/8	20	8	15	80	86	5	40	52	62	7	10	12
ø40	172	286	132	246	40	10	55	Rc1/8	20	8	16	90	96	5	50	63	72	7	12	16
ø50	222	376	168	322	54	12	70	Rc1/4	25	9	18	116	124	6	64	80	92	9	16	19
ø63	251	449	188	386	63	16	85	Rc1/4	25	9	18	136	144	6	80	100	112	11	19	22
ø80	298	522	225	449	73	19	110	Rc3/8	35	14	28	174	180	0	100	125	142	14	22	25

Code / Bore size (mm)	LE	Ⓛ	LH	Ⓛ	LJ	Ⓛ	LP	Ⓛ	LD
ø30	46	40	90	104	106	124	7	9	60
ø40	50	44	114	120	134	146	9	11	70
ø50	70	60	136	152	160	182	11	14	90
ø63	86	74	162	178	190	214	14	16	110
ø80	114	100	200	218	236	258	16	18	140

*1 : Codes with ◯ indicate dimensions of high load.

Dimensions

● Head side flange (FB)

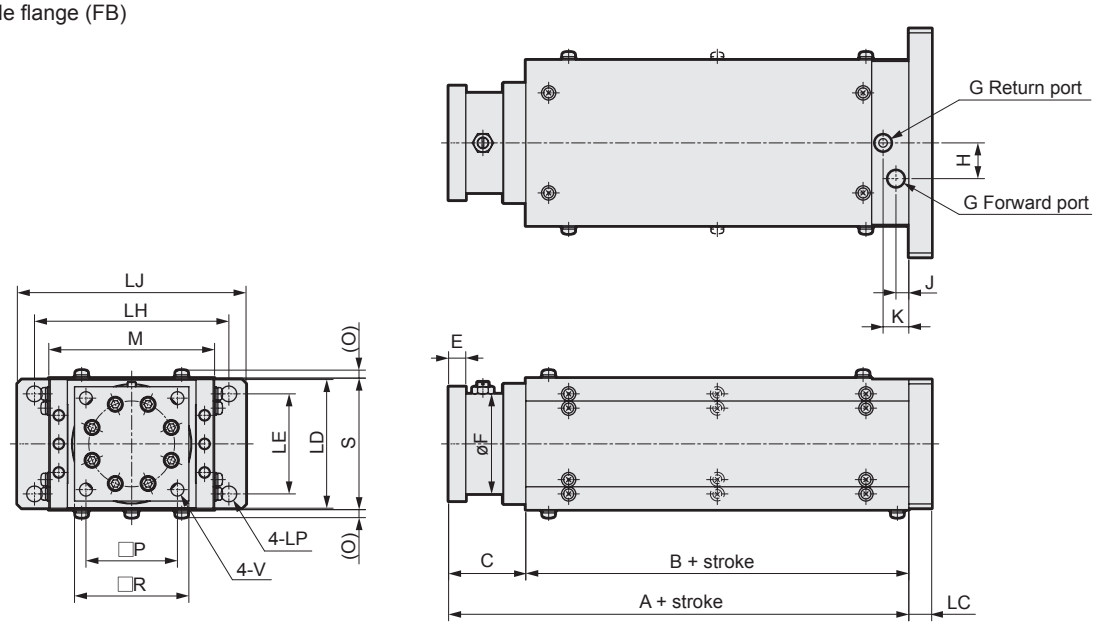

Note: Refer to page 1223 for switch dimensions with switch.

Code	Head side flange (FB) basic dimensions																			
Bore size (mm)	A	(A)	B	(B)	C	E	F	G	H	J	K	M	(M)	O	P	R	S	V	LC	(LC)
ø30	151	249	120	218	31	8	45	Rc1/8	20	8	15	80	86	5	40	52	62	7	10	12
ø40	172	286	132	246	40	10	55	Rc1/8	20	8	16	90	96	5	50	63	72	7	12	16
ø50	222	376	168	322	54	12	70	Rc1/4	25	9	18	116	124	6	64	80	92	9	16	19
ø63	251	449	188	386	63	16	85	Rc1/4	25	9	18	136	144	6	80	100	112	11	19	22
ø80	298	522	225	449	73	19	110	Rc3/8	35	14	28	174	180	6	100	125	142	14	22	25

Code	Head side flange (FB) basic dimensions								
Bore size (mm)	LE	(LE)	LH	(LH)	LJ	(LJ)	LP	(LP)	LD
ø30	46	40	90	104	106	124	7	9	60
ø40	50	44	114	120	134	146	9	11	70
ø50	70	60	136	152	160	182	11	14	90
ø63	86	74	162	178	190	214	14	16	110
ø80	114	100	200	218	236	258	16	18	140

*1 : Codes with ◯ indicate dimensions of high load.

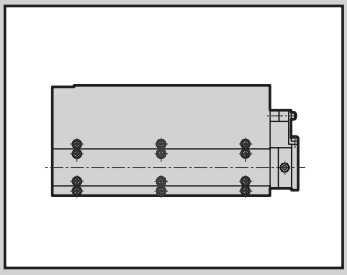

Robot cylinder/double acting/with brake
double acting/with brake high load

MFC-B/MFC-BK Series

● Bore size: ø30, ø40, ø50, ø63, ø80

RoHS

Specifications

Item		MFC-B/MFC-BL/MFC-BK/MFC-BKL				
Bore size	mm	ø30	ø40	ø50	ø63	ø80
Actuation		Double acting/with brake				
Working fluid		Compressed air				
Max. working pressure	Cylinder section MPa	1.0 (≈150 psi, 10 bar)				
	Brake section MPa	1.0 (≈150 psi, 10 bar)				
Min. working pressure	Cylinder section MPa	0.15 (≈22 psi, 1.5 bar)				
	Brake section MPa	0.35 (≈51 psi, 3.5 bar)				
Proof pressure	MPa	1.6 (≈230 psi, 16 bar)				
Ambient temperature	°C	-10 (14°F) to 50 (122°F) (no freezing)				
Port size		Rc1/8		Rc1/4		Rc3/8
Stroke tolerance	mm	$^{+0.5}_{0}$ (Less than 350) $^{+1.0}_{0}$ (350 and over)				
Working piston speed	mm/s	50 to 300 (no load)				
Cushion		Air cushion				
Effective cushion length	mm	15	13	22	22	26
Lubrication		Not required (use turbine oil class 1 ISO VG32 if necessary for lubrication)				
Allowable absorbed energy	J Cushioned	0.9	4.3	8.4	15.8	27.9
	J Without cushion	Cannot absorb high energy generated by external load. We recommend using an external shock absorber.				

Stroke

Bore size (mm)	Standard stroke (mm)	Max. stroke (mm)	Min. stroke (mm)	Min. stroke (mm) * When with switch
ø30	50/75/100/150/200/300	500	5 *2	30
ø40				
ø50		1000		
ø63				
ø80				

*1 : The custom stroke is available in 5 mm increments.
*2 : The cushion effect may not be attained if the cylinder stroke is shorter than the effective cushion length.

Switch specifications

Item		Proximity 2-wire			Proximity 3-wire	
		R1	R2	R2Y (2-color LED)	R3	R3Y (2-color LED)
Applications		Programmable controller, relay, compact solenoid valve	Dedicated for programmable controller		For programmable controller, relay, IC circuit, solenoid valve	
Output method		-			NPN output	
Power supply voltage/current		-			4.5 VDC to 28 VDC	
Load voltage/ current		85 VAC to 265 VAC 5 to 100 mA	10 V to 30 VDC 5 to 30 mA		30 VDC or less 200 mA or less (R3), 100 mA or less (R3Y)	
Indicator		LED (Lit when ON) (R1, R2, R3)/Red/Green LED (Lit when ON) (R2Y, R3Y)				
Leakage current		1 mA or less with 100 VAC, 2 mA or less with 200 VAC	1 mA or less	1.2 mA or less	10 μA or less	
Max. shock resistance		980 m/s²				
Weight g	Grommet	1 m:42 3 m:100 5 m:158		1 m:56 3 m:114 5 m:172	1 m:42 3 m:100 5 m:158	1 m:56 3 m:114 5 m:172
	Terminal box	68		82	68	82

Item		Reed 2-wire			
		R0	R4	R5	R6
Applications		For relay, programmable controller	For high capacity relay, solenoid valve	For programmable controller, relay, IC circuit (without indicator lamp), serial connection	Dedicated for programmable controller I (with DC self-hold)
Load voltage/ current		12/24 VDC, 5 to 50 mA 110 VAC, 7 to 20 mA 220 VAC, 7 to 10 mA	110 VAC, 20 to 200 mA 220 VAC, 10 to 200 mA	5/12/24 VDC: 50 mA or less, 110 VAC: 20 mA or less, 220 VAC: 10 mA or less	24 VDC, 5 to 50 mA
Indicator		LED (Lit when ON)	Neon lamp (Lit when OFF)	No indicator lamp	LED (Lit when ON)
Leakage current		0 mA	1 mA or less	0 mA	0.1 mA or less
Max. shock resistance		294 m/s²			
Weight g	Grommet	1 m:42 3 m:100 5 m:158			
	Terminal box	68			

*1: Refer to Ending Page 1 for detailed switch specifications and dimensions.

LCM
LCR
LCG
LCW
LCX
STM
STG
STS/STL
STR2
UCA2
ULK*
JSK/M2
JSG
JSC3/JSC4
USSD
UFCD
USC
UB
JSB3
LMB
LML
HCM
HCA
LBC
CAC4
UCAC2
CAC-N
UCAC-N
RCS2
RCC2
PCC
SHC
MCP
GLC
MFC
BBS
RRC
GRC
RV3*
NHS
HRL
LN
Hand
Chuk
MecHnd/Chuk
ShkAbs
FJ
FK
SpdContr
Ending

Cylinder weight (with brake/high load with brake)

● With brake: MFC-B/MFC-BL (Unit: kg)

Bore size (mm)	When stroke (S) = 0 mm Product weight					Additional weight per S = 100 mm	Switch weight	Mounting bracket weight	Switch rail weight for 0 mm stroke	Weight of rail holding bracket			Additional weight with switch rail S = 100 mm
	Basic (00)	Foot (LA) St = under 300 mm	Foot (LA) St ≥ 300 mm	Flange (FA)	Flange (FB)					5 to 200 mm	201 to 500 mm	501 to 1000 mm	
ø30	5.7	6.2	6.7	6.1	6.2	1.2	Refer to the weight in the switch specifications.	0.020	0.058	0.034	0.051	-	0.040
ø40	9.1	10.0	10.9	9.7	10.0	1.5			0.064	0.038	0.057	-	
ø50	18.1	19.9	21.7	19.3	19.9	2.7			0.093	0.052	0.078	0.130	
ø63	28.1	31.1	34.1	30.2	31.1	3.0			0.098	0.076	0.114	0.190	
ø80	45.2	50.7	56.2	49.1	50.7	4.4			0.117	0.086	0.129	0.215	

● High load with brake: MFC-BK/MFC-BKL (Unit: kg)

Bore size (mm)	When stroke (S) = 0 mm Product weight					Additional weight per S = 100 mm	Switch weight	Mounting bracket weight	Switch rail weight for 0 mm stroke	Weight of rail holding bracket			Additional weight with switch rail S = 100 mm
	Basic (00)	Foot (LA) St = under 300 mm	Foot (LA) St ≥ 300 mm	Flange (FA)	Flange (FB)					5 to 200 mm	201 to 500 mm	501 to 1000 mm	
ø30	8.1	8.9	9.7	8.7	8.8	1.2	Refer to the weight in the switch specifications.	0.020	0.097	0.034	0.051	-	0.040
ø40	12.7	14.2	15.6	13.6	14.0	1.5			0.109	0.038	0.057	-	
ø50	26.1	28.8	31.5	27.7	28.6	2.7			0.154	0.052	0.078	0.130	
ø63	40.8	45.2	49.6	43.5	44.9	3.0			0.176	0.076	0.114	0.190	
ø80	65.8	73.4	81.0	70.5	72.9	4.4			0.206	0.086	0.129	0.215	

(Example) Product weight of MFC-BL-00-30B-50-R0-R

- Product weight at 0 mm stroke (mounting: 00) ..... 5.7 kg
- Additional weight per 50 mm stroke ..... $1.1 \times \frac{50}{100} = 0.55$ kg
- Switch rail weight for 0 mm stroke ..... 0.058 kg
- Rail holding bracket weight (stroke 50 mm) ..... 0.034 kg
- Switch rail additional weight for 50 mm stroke ..... $0.040 \times \frac{50}{100} = 0.020$ kg
- Weight of one RO switch ..... 0.042 kg
- Weight of 1 mounting bracket ..... 0.020 kg
- Product weight ..... 5.7 + 0.55 + 0.058 + 0.034 + 0.020 + 0.042 + 0.020 = 6.424 kg

Planned for end of production
February 2022

LCM
LCR
LCG
LCW
LCX
STM
STG
STS/STL
STR2
UCA2
ULK*
JSK/M2
JSG
JSC3/JSC4
USSD
UFCD
USC
UB
JSB3
LMB
LML
HCM
HCA
LBC
CAC4
UCAC2
CAC-N
UCAC-N
RCS2
RCC2
PCC
SHC
MCP
GLC
MFC
BBS
RRC
GRC
RV3*
NHS
HRL
LN
Hand
Chuk
MecHnd/Chuk
ShkAbs
FJ
FK
SpdContr
Ending

How to order

Without switch (without magnet for switch)

MFC-B - 00 - 30 - B - 50

With switch (built-in magnet for switch)

MFC-BL - 00 - 30 - B - 50 - R0 - R

Ⓐ Model
Ⓑ Mounting *1
Ⓒ Bore size
Ⓓ Cushion
Ⓔ Stroke
Ⓕ Switch model No.
Ⓖ Switch quantity

Code	Description
Ⓐ Model	
MFC-B	With brake
MFC-BL	With brake/with switch
MFC-BK	High load with brake
MFC-BKL	High load with brake/with switch

Ⓑ Mounting	
00	Basic
LA	Rod side foot
FA	Rod side flange
FB	Head side flange

Ⓒ Bore size (mm)	
30	ø30
40	ø40
50	ø50
63	ø63
80	ø80

Ⓓ Cushion	
B	Both sides cushioned
R	Rod side cushioned
H	Head side cushioned
N	Without cushion

Ⓔ Stroke (mm)

Bore size	Stroke *2	Custom stroke
ø30	**5 to 500**	**In 5 mm increments**
ø40	**5 to 500**	
ø50	**5 to 1000**	
ø63	**5 to 1000**	
ø80	**5 to 1000**	

Ⓕ Switch model No.

Grommet	Terminal box Type	Contact	Voltage AC	Voltage DC	Indicator	Lead wire
R 1*	**R1B**	Proximity	●		1-color LED	2-wire
R 2*	**R2B**	Proximity		●	1-color LED	2-wire
R 3*	**R3B**	Proximity		●	1-color LED	3-wire
R 0*	**R0B**	Reed	●	●	1-color LED	2-wire
R 4*	**R4B**	Reed	●		1-color LED	2-wire
R 5*	**R5B**	Reed	●	●	No indicator lamp	2-wire
R 6*	**R6B**	Reed		●	1-color LED	2-wire

*** Lead wire length**	
Blank	1 m (standard)
3	3 m (option)
5	5 m (option)

Ⓖ Switch quantity	
R	1 on rod side
H	1 on head side
D	2
T	3

⚠ Precautions for model No. selection

*1 : Mounting bracket will be shipped assembled with the product.
*2 : Refer to page 1226 for min. stroke with switch.

[Example of model No.]

MFC-BL-00-30B-50-R0-R

Model: Robot cylinder

Ⓐ Model : With brake, with switch
Ⓑ Mounting : Basic
Ⓒ Bore size : ø30 mm
Ⓓ Cushion : Both sides cushioned
Ⓔ Stroke : 50mm
Ⓕ Switch model No.: Reed switch R0, lead wire length 1 m
Ⓖ Switch quantity : 1 on rod side

How to order switch

● Switch body + mounting bracket set (switch rail + rail mounting bracket + switch mounting bracket)

MFC-B - R0 - 30 - 200

- MFC-B: Model (Item Ⓐ on page 1228)
- R0: Switch model No. (Item Ⓕ on page 1228)
- 30: Bore size (Item Ⓒ on page 1228)
- 200: Stroke (Item Ⓔ on page 1228)

● Switch body only

SW - R0

- R0: Switch model No. (Item Ⓕ on page 1228)

● Mounting bracket set

MFC-B - R - 30

- MFC-B: Model (Item Ⓐ on page 1228)
- R: Mounting bracket
- 30: Bore size (Item Ⓒ on page 1228)

● Terminal box only
· For R□B

SW - RB

Theoretical thrust table

(Unit: N)

Bore size (mm)	Operating direction	Working pressure MPa									
		0.15	0.2	0.3	0.4	0.5	0.6	0.7	0.8	0.9	1.0
ø30	Push	8.85x10	$1.18x10^2$	$1.78x10^2$	$2.37x10^2$	$2.96x10^2$	$3.56x10^2$	$4.15x10^2$	$4.75x10^2$	$5.34x10^2$	$5.93x10^2$
	Pull	$1.05x10^2$	$1.41x10^2$	$2.12x10^2$	$2.82x10^2$	$3.53x10^2$	$4.24x10^2$	$4.94x10^2$	$5.65x10^2$	$6.36x10^2$	$7.06x10^2$
ø40	Push	$1.58x10^2$	$2.11x10^2$	$3.16x10^2$	$4.22x10^2$	$5.27x10^2$	$6.33x10^2$	$7.38x10^2$	$8.44x10^2$	$9.50x10^2$	$1.05x10^3$
	Pull	$1.88x10^2$	$2.51x10^2$	$3.76x10^2$	$5.02x10^2$	$6.28x10^2$	$7.53x10^2$	$8.79x10^2$	$1.00x10^3$	$1.13x10^3$	$1.25x10^3$
ø50	Push	$2.46x10^2$	$3.29x10^2$	$4.94x10^2$	$6.59x10^2$	$8.24x10^2$	$9.89x10^2$	$1.15x10^3$	$1.31x10^3$	$1.48x10^3$	$1.64x10^3$
	Pull	$2.94x10^2$	$3.92x10^2$	$5.89x10^2$	$7.85x10^2$	$9.81x10^2$	$1.17x10^3$	$1.37x10^3$	$1.57x10^3$	$1.76x10^3$	$1.96x10^3$
ø63	Push	$4.20x10^2$	$5.60x10^2$	$8.40x10^2$	$1.12x10^3$	$1.40x10^3$	$1.68x10^3$	$1.96x10^3$	$2.24x10^3$	$2.52x10^3$	$2.80x10^3$
	Pull	$4.67x10^2$	$6.23x10^2$	$9.35x10^2$	$1.24x10^3$	$1.55x10^3$	$1.87x10^3$	$2.18x10^3$	$2.49x10^3$	$2.80x10^3$	$3.11x10^3$
ø80	Push	$6.80x10^2$	$9.07x10^2$	$1.36x10^3$	$1.81x10^3$	$2.26x10^3$	$2.72x10^3$	$3.17x10^3$	$3.62x10^3$	$4.08x10^3$	$4.53x10^3$
	Pull	$7.52x10^2$	$1.00x10^3$	$1.50x10^3$	$2.01x10^3$	$2.51x10^3$	$3.01x10^3$	$3.51x10^3$	$4.02x10^3$	$4.52x10^3$	$5.02x10^3$

Internal structure and parts list (with brake)

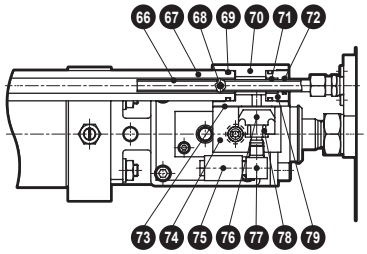

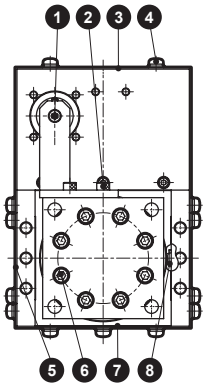

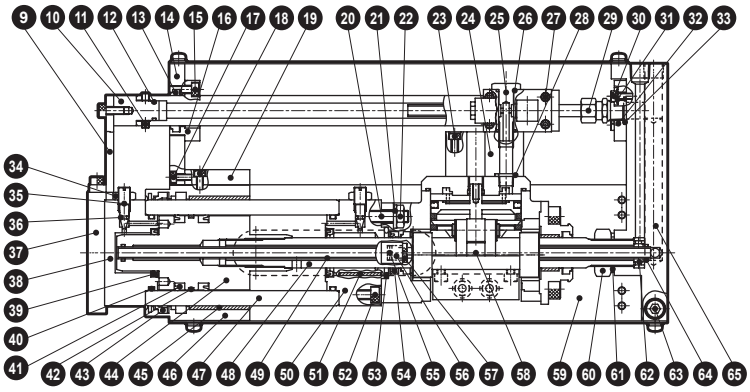

No.	Part name	Material	Remarks	No.	Part name	Material	Remarks
1	Hexagon socket head cap screw	Steel		40	Gasket	Nitrile rubber	
2	Hexagon socket head cap screw	Steel		41	Piston packing	Nitrile rubber	
3	Top cover	Steel plate		42	Wear ring	Polyacetal resin	
4	Cross-recessed pan head screw, captive washer	Steel		43	Dust wiper	Nitrile rubber	
5	Middle cover	Aluminum plate		44	Piston	Aluminum alloy	
6	Hexagon socket head cap screw	Steel		45	Bush	Dry bearing	
7	Bottom cover	Steel plate		46	Bearing housing	Cast iron	
8	Gasket	Nitrile rubber		47	Cylinder tube	Aluminum alloy	
9	Piping end holder	Steel		48	Piston rod	Steel	
10	Piping end guide	Aluminum alloy		49	Pipe	Stainless steel	
11	Hexagon socket set screw	Steel		50	Rod cover	Cast iron	
12	Gasket	Nitrile rubber		51	Rotation-stop plate	Dry bearing	
13	Dust wiper	Nitrile rubber		52	Hexagon socket head cap screw	Steel	
14	Brake piping block (A)	Aluminum alloy		53	Gasket	Nitrile rubber	ø50 to ø80 only
15	Hexagon socket head cap screw	Steel		54	Rod packing	Nitrile rubber	
16	Brake piping holder	Steel		55	Magnet	Rare-earth	With switch only
17	Hexagon socket head cap screw	Steel		56	Magnet holder	Aluminum alloy	With switch only
18	Hexagon socket head cap screw	Steel		57	Hexagon socket head cap screw	Steel	With switch only
19	Brake piping block (B)	Aluminum alloy		58	Brake section		
20	Hexagon socket head cap screw (ø30, ø40) Hexagon socket set screw (ø63 to ø80)	Steel		59	Side guide	Steel	
				60	Hexagon nut	Steel	
21	Spring washer	Steel	ø50 to ø80 only	61	Seal washer	Nitrile rubber, steel	
22	Hexagon nut	Steel	ø50 to ø80 only	62	Pipe guide	Aluminum alloy	
23	Hexagon socket head cap screw	Steel		63	Hexagon socket head cap screw	Steel	
24	Spacer	Aluminum alloy	ø50 to ø80 only	64	Gasket	Nitrile rubber	
25	Nipple	Copper alloy		65	Fixed guide	Cast iron	
26	Gasket	Nitrile rubber		66	Piping pipe	Stainless steel	
27	Hexagon socket head cap screw	Steel		67	Piping rod	Steel	
28	Gasket	Nitrile rubber	ø50 to ø80 only	68	Hexagon socket set screw	Steel	
29	Pipe joint	Copper alloy		69	Gasket	Nitrile rubber	
30	Hexagon socket head cap screw	Steel		70	Piping plate 1	Aluminum alloy	
31	Plain washer	Steel		71	Bush	Dry bearing	
32	Brake piping collar	Aluminum alloy		72	Piping packing	Nitrile rubber	
33	Gasket	Nitrile rubber		73	QEV gasket	Rubber cork	
34	Needle nut	Steel		74	QEV body	Aluminum alloy	
35	Cushion needle	Copper alloy		75	Silencer	Polyamide resin	
36	Gasket	Nitrile rubber		76	Quick exhaust valve packing	Nitrile rubber	
37	Head flange	Steel		77	Elbow fitting	Copper alloy	
38	Head cover	Cast iron		78	Valve seat	Copper alloy	
39	Cushion packing	Nitrile rubber, steel		79	Piping plate 2	Aluminum alloy	

Note: Contact CKD when replacing repair parts.

Internal structure and parts list (with brake/high load)

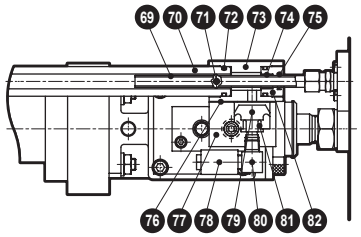

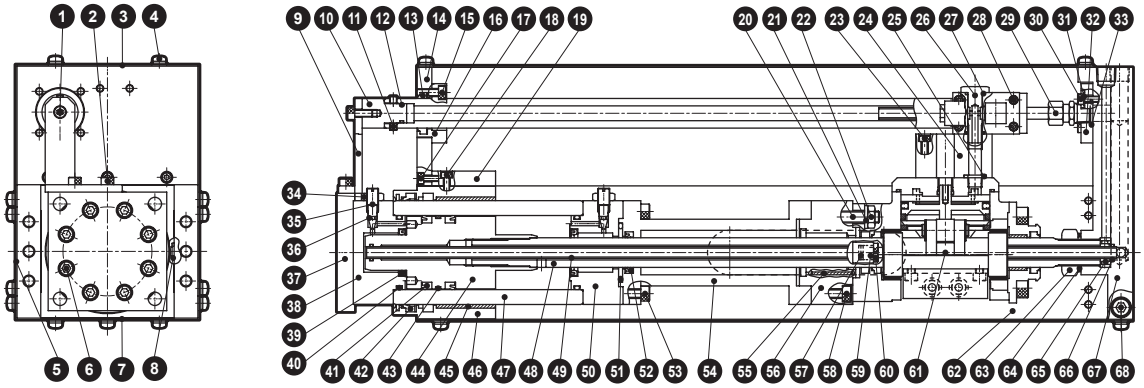

No.	Part name	Material	Remarks	No.	Part name	Material	Remarks
1	Hexagon socket head cap screw	Steel		42	Dust wiper	Nitrile rubber	
2	Hexagon socket head cap screw	Steel		43	Wear ring	Polyacetal resin	
3	Top cover	Steel plate		44	Piston	Aluminum alloy	
4	Cross-recessed pan head screw, captive washer	Steel		45	Bush	Dry bearing	
5	Middle cover	Aluminum plate		46	Bearing housing	Cast iron	
6	Hexagon socket head cap screw	Steel		47	Cylinder tube	Aluminum alloy	
7	Bottom cover	Steel plate		48	Piston rod	Steel	
8	Gasket	Nitrile rubber		49	Pipe	Stainless steel	
9	Piping end holder	Steel		50	Rod cover	Cast iron	
10	Piping end guide	Aluminum alloy		51	Gasket	Nitrile rubber	
11	Hexagon socket set screw	Steel		52	Rod packing	Nitrile rubber	
12	Gasket	Nitrile rubber		53	Hexagon socket head cap screw	Steel	
13	Dust wiper	Nitrile rubber		54	Packing holder	Steel	
14	Brake piping block (A)	Aluminum alloy		55	Rotation-stop plate	Dry bearing	
15	Hexagon socket head cap screw	Steel		56	Guide cover	Cast iron	
16	Brake piping holder	Steel		57	Magnet	Rare-earth	With switch only
17	Hexagon socket head cap screw	Steel		58	Hexagon socket head cap screw	Steel	
18	Hexagon socket head cap screw	Steel		59	Magnet holder	Aluminum alloy	With switch only
19	Brake piping block (B)	Aluminum alloy		60	Hexagon socket head cap screw	Steel	With switch only
20	Hexagon socket head cap screw (ø30, ø40) Hexagon socket set screw (ø63 to ø80)	Steel		61	Brake section		
				62	Side guide	Steel	
21	Spring washer	Steel	ø50 to ø80 only	63	Hexagon nut	Steel	
22	Hexagon nut	Steel	ø50 to ø80 only	64	Seal washer	Nitrile rubber, steel	
23	Hexagon socket head cap screw	Steel		65	Pipe guide	Aluminum alloy	
24	Spacer	Aluminum alloy	ø50 to ø80 only	66	Gasket	Nitrile rubber	
25	Gasket	Nitrile rubber	ø50 to ø80 only	67	Fixed guide	Cast iron	
26	Nipple	Copper alloy		68	Hexagon socket head cap screw	Steel	
27	Gasket	Nitrile rubber		69	Piping pipe	Stainless steel	
28	Hexagon socket head cap screw	Steel		70	Piping rod	Steel	
29	Pipe joint	Copper alloy		71	Hexagon socket set screw	Steel	
30	Hexagon socket head cap screw	Steel		72	Gasket	Nitrile rubber	
31	Plain washer	Steel		73	Piping plate 1	Aluminum alloy	
32	Brake piping collar	Aluminum alloy		74	Bush	Dry bearing	
33	Gasket	Nitrile rubber		75	Piping packing	Nitrile rubber	
34	Needle nut	Steel		76	QEV gasket	Rubber cork	
35	Cushion needle	Copper alloy		77	QEV body	Aluminum alloy	
36	Gasket	Nitrile rubber		78	Silencer	Polyamide resin	
37	Head flange	Steel		79	Quick exhaust valve packing	Nitrile rubber	
38	Head cover	Cast iron		80	Elbow fitting	Copper alloy	
39	Cushion packing	Nitrile rubber, steel		81	Valve seat	Copper alloy	
40	Gasket	Nitrile rubber		82	Piping plate 2	Aluminum alloy	
41	Piston packing	Nitrile rubber					

LCM
LCR
LCG
LCW
LCX
STM
STG
STS/STL
STR2
UCA2
ULK*
JSK/M2
JSG
JSC3/JSC4
USSD
UFCD
USC
UB
JSB3
LMB
LML
HCM
HCA
LBC
CAC4
UCAC2
CAC-N
UCAC-N
RCS2
RCC2
PCC
SHC
MCP
GLC
MFC
BBS
RRC
GRC
RV3*
NHS
HRL
LN
Hand
Chuk
MecHnd/Chuk
ShkAbs
FJ
FK
SpdContr
Ending

Dimensions

● MFC-B (K) Basic dimensions (00)

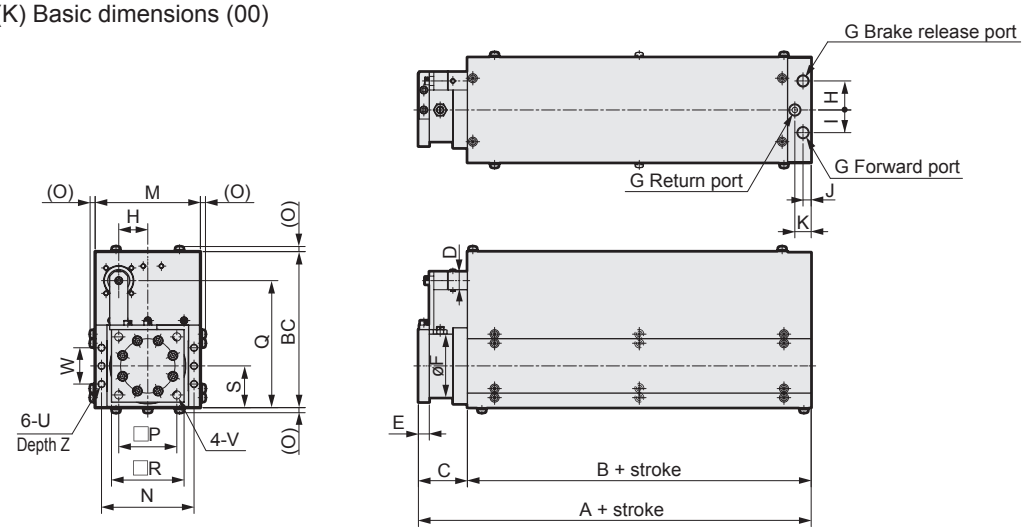

Code / Bore size (mm)	Basic (00) basic dimensions																			
	A	A	B	B	BC	C	D	E	F	G	H	I	J	K	M	M	N	N	O	P
ø30	212	310	181	279	122	31	12	8	45	Rc1/8	20	20	8	15	80	86	69	72	5	40
ø40	238	352	198	312	162	40	16	10	55	Rc1/8	25	20	8	16	90	96	79	82	5	50
ø50	333	487	279	433	172	54	20	12	70	Rc1/4	32	25	9	18	116	124	102	106	6	64
ø63	375	573	312	510	188	63	20	16	85	Rc1/4	32	25	9	18	136	144	122	126	6	80
ø80	443	667	370	594	225	73	25	19	110	Rc3/8	36	35	14	28	174	180	156	159	6	100

*1 : Codes with ○ indicate dimensions of high load.

Code / Bore size (mm)	Basic (00) basic dimensions								
	Q	R	S	T	U	V	W	Z	Z
ø30	88	52	31	20	M 6	7	30	10	12
ø40	105	63	36	25	M 6	7	35	10	12
ø50	140	80	46	32	M 8	9	40	12	15
ø63	161	100	56	32	M10	11	58	15	18
ø80	196	125	71	36	M12	14	80	18	20

● MFC-B(K) L (robot cylinder with brake, with switch)

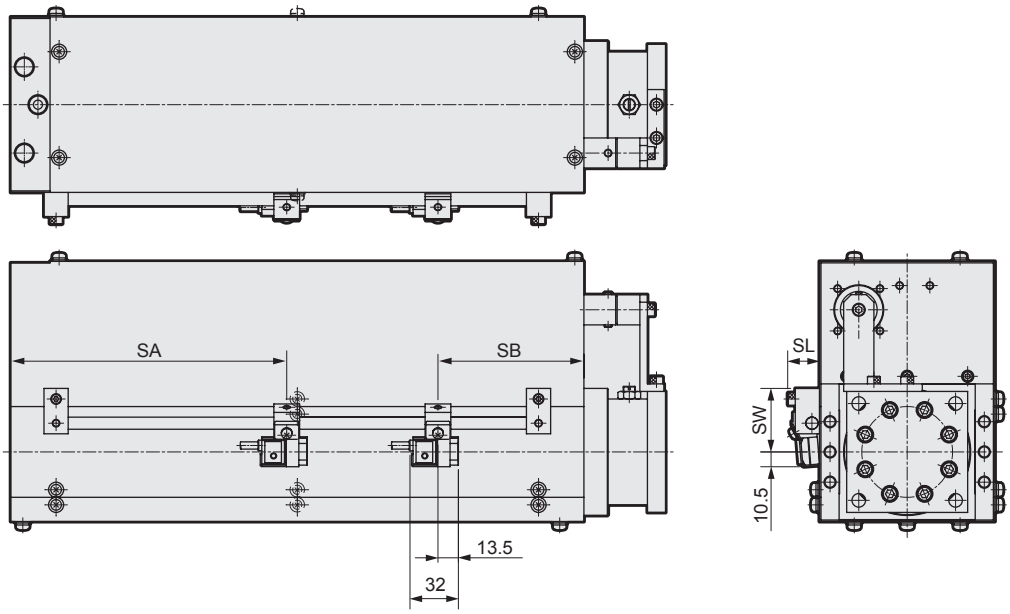

Unit: mm

Code / Bore size (mm)	SW	SL	SA	SB	SB
ø30	31	20	111.5	69.5	167.5
ø40	35	20	121	77	191
ø50	42	21	182.5	96.5	250.5
ø63	52	21	192.5	119.5	317.5
ø80	59	21	237.5	132.5	356.5

*1 : Codes with ○ indicate dimensions of high load.
*2 : For 30 to 50 mm stroke, switch can be installed bi-directionally as well as uni-directionally.

Dimensions

● Rod side foot (LA)

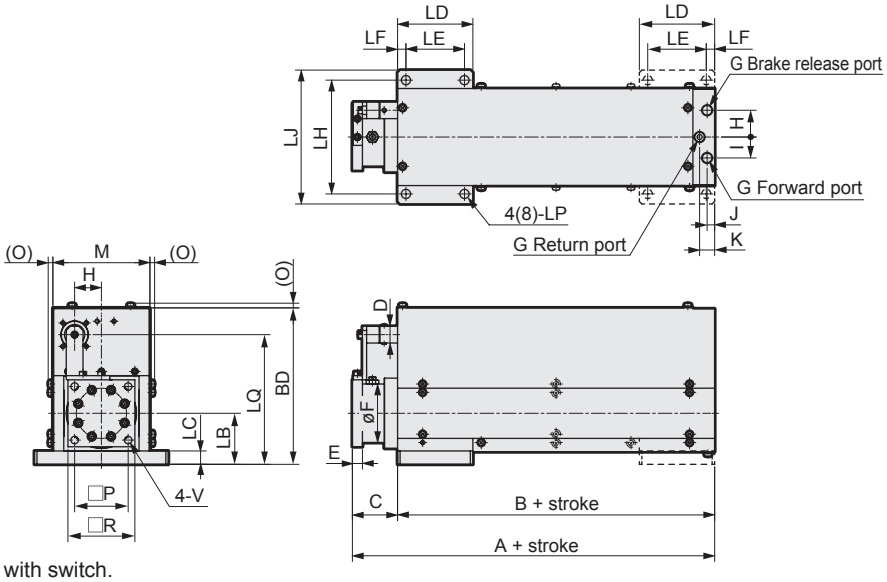

*1 : Codes with ○ indicate dimensions of high load.
*2 : The following strokes include the dotted line

For ø30.....300 mm or more
For ø40.....300 mm or more
For ø50.....400 mm or more
For ø63.....500 mm or more
For ø80.....500 mm or more

Note: Refer to page 1232 for switch dimensions with switch.

Code / Bore size (mm)	Rod side foot (LA) basic dimensions																		
	A	(A)	B	(B)	BD	(BD)	C	D	E	F	G	H	I	J	K	LB	(LB)	LC	(LC)	LD
ø30	212	310	181	279	131	133	31	12	8	45	Rc1/8	20	20	8	15	40	42	10	12	60
ø40	238	352	198	312	173	177	40	16	10	55	Rc1/8	25	20	8	16	47	51	12	16	70
ø50	333	487	279	433	187	190	54	20	12	70	Rc1/4	32	25	9	18	61	64	16	19	90
ø63	375	573	312	510	206	209	63	20	16	85	Rc1/4	32	25	9	18	74	77	19	22	110
ø80	443	667	370	594	246	249	73	25	19	110	Rc3/8	36	35	14	28	92	95	22	25	140

Code / Bore size (mm)	Rod side foot (LA) basic dimensions																		
	(LD)	LE	(LE)	LF	(LF)	LH	(LH)	LJ	(LJ)	LP	(LP)	LQ	(LQ)	M	(M)	O	P	R	V
ø30	70	46	50	7	10	90	104	106	124	7	9	97	99	80	86	5	40	52	7
ø40	80	50	54	10	13	114	120	134	146	9	11	116	120	90	96	5	50	63	7
ø50	100	70	70	10	15	136	152	160	182	11	14	155	158	116	124	6	64	80	9
ø63	120	86	84	12	18	162	178	190	214	14	16	179	182	136	144	6	80	100	11
ø80	150	114	110	13	20	200	218	236	258	16	18	217	220	174	180	6	100	125	14

● Rod side flange (FA)

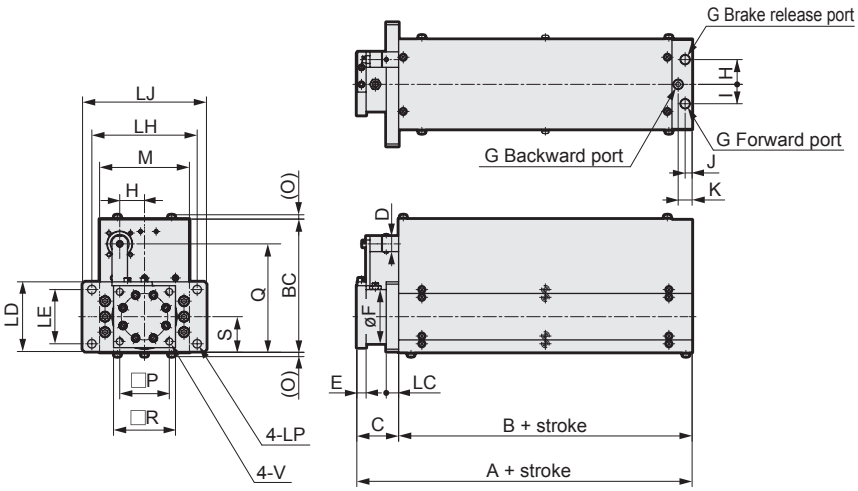

*1 : Codes with ○ indicate dimensions of high load.

Note: Refer to page 1232 for switch dimensions with switch.

Code / Bore size (mm)	Rod side flange (FA) basic dimensions																			
	A	(A)	B	(B)	BC	C	D	E	F	G	H	I	J	K	LC	(LC)	LD	LE	(LE)	LH
ø30	212	310	181	279	122	31	12	8	45	Rc1/8	20	20	8	15	10	12	60	46	40	90
ø40	238	352	198	312	162	40	16	10	55	Rc1/8	25	20	8	16	12	16	70	50	44	114
ø50	333	487	279	433	172	54	20	12	70	Rc1/4	32	25	9	18	16	19	90	70	60	136
ø63	375	573	312	510	188	63	20	16	85	Rc1/4	32	25	9	18	19	22	110	86	74	162
ø80	443	667	370	594	225	73	25	19	110	Rc3/8	36	35	14	28	22	25	140	114	100	200

Code / Bore size (mm)	Rod side flange (FA) basic dimensions												
	(LH)	LJ	(LJ)	LP	(LP)	M	(M)	O	P	Q	R	S	V
ø30	104	106	124	7	9	80	86	5	40	88	52	31	7
ø40	120	134	146	9	11	90	96	5	50	105	63	36	7
ø50	152	160	182	11	14	116	124	6	64	140	80	46	9
ø63	178	190	214	14	16	136	144	6	80	161	100	56	11
ø80	218	236	258	16	18	174	180	6	100	196	125	71	14

LCM
LCR
LCG
LCW
LCX
STM
STG
STS/STL
STR2
UCA2
ULK*
JSK/M2
JSG
JSC3/JSC4
USSD
UFCD
USC
UB
JSB3
LMB
LML
HCM
HCA
LBC
CAC4
UCAC2
CAC-N
UCAC-N
RCS2
RCC2
PCC
SHC
MCP
GLC
MFC
BBS
RRC
GRC
RV3*
NHS
HRL
LN
Hand
Chuk
MecHnd/Chuk
ShkAbs
FJ
FK
SpdContr
Ending

Dimensions

● Head side flange (FB)

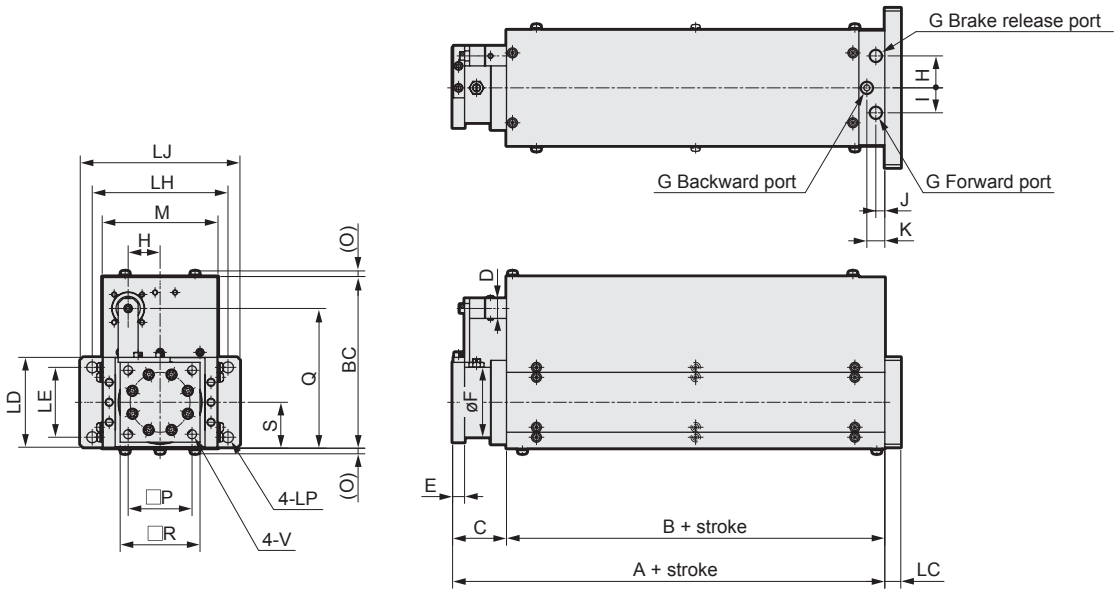

*1 : Codes with ○ indicate dimensions of high load.

Note: Refer to page 1232 for switch dimensions with switch.

Code / Bore size (mm)	Head side flange (FB) basic dimensions																			
	A	(A)	B	(B)	BC	C	D	E	F	G	H	I	J	K	LC	(LC)	LD	LE	(LE)	LH
ø30	212	310	181	279	122	31	12	8	45	Rc1/8	20	20	8	15	10	12	60	46	40	90
ø40	238	352	198	312	162	40	16	10	55	Rc1/8	25	20	8	16	12	16	70	50	44	114
ø50	333	487	279	433	172	54	20	12	70	Rc1/4	32	25	9	18	16	19	90	70	60	136
ø63	375	573	312	510	188	63	20	16	85	Rc1/4	32	25	9	18	19	22	110	86	74	162
ø80	443	667	370	594	225	73	25	19	110	Rc3/8	36	35	14	28	22	25	140	114	100	200

Code / Bore size (mm)	Head side flange (FB) basic dimensions												
	(LH)	LJ	(LJ)	LP	(LP)	M	(M)	O	P	Q	R	S	V
ø30	104	106	124	7	9	80	86	5	40	88	52	31	7
ø40	120	134	146	9	11	90	96	5	50	105	63	36	7
ø50	152	160	182	11	14	116	124	6	64	140	80	46	9
ø63	178	190	214	14	16	136	144	6	80	161	100	56	11
ø80	218	236	258	16	18	174	180	6	100	196	125	71	14

MEMO

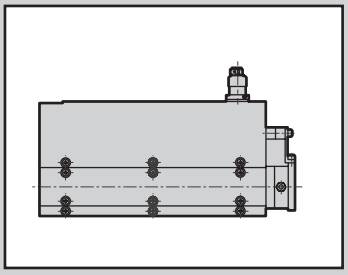

Robot cylinder Double acting/with brake sensor
Double acting/with brake sensor, high load

MFC-BS/MFC-BSK Series

● Bore size: ø30, ø40, ø50, ø63, ø80

RoHS

Specifications

Item			MFC-BS/MFC-BSK				
Bore size		mm	ø30	ø40	ø50	ø63	ø80
Actuation			Double acting/with brake sensor				
Working fluid			Compressed air				
Max. working pressure	Cylinder	MPa	1.0 (≈150 psi, 10 bar)				
	Brake section	MPa	1.0 (≈150 psi, 10 bar)				
Min. working pressure	Cylinder	MPa	0.15 (≈22 psi, 1.5 bar)				
	Brake section	MPa	0.35 (≈51 psi, 3.5 bar)				
Proof pressure		MPa	1.6 (≈230 psi, 16 bar)				
Ambient temperature		°C	0 (32°F) to 50 (122°F)				
Port size			Rc1/8		Rc1/4		Rc3/8
Stroke tolerance		mm	$^{+0.5}_{0}$ (Less than 350) $^{+1.0}_{0}$ (350 and over)				
Working piston speed		mm/s	50 to 300 (no load)				
Cushion			Air cushion				
Effective cushion length		mm	15	13	22	22	26
Stopping accuracy		mm	±1.0 (300 mm/s, no load)				
Holding force		N	431	765	1569	2451	3922
Resolution		mm	0.1				
Lubrication			Not required (use turbine oil class 1 ISO VG32 if necessary for lubrication)				
Allowable absorbed energy	Cushioned	J	0.9	4.3	8.4	15.8	27.9
	Without cushion	J	Cannot absorb high energy generated by external load. We recommend using an external shock absorber.				

* Consult with CKD regarding low hydraulic specifications.

Stroke

Bore size (mm)	Standard stroke (mm)	Max. stroke (mm)	Min. stroke (mm)
ø30	50/75/100/150/200/300	500	5
ø40			
ø50		1000	
ø63			
ø80			*2

*1 : The custom stroke is available in 5 mm increments.
*2 : The cushion effect may not be attained if the cylinder stroke is shorter than the effective cushion length.

Detector (encoder) specifications

Item		Specifications
Rated voltage (V)		5 to 12 VDC (±5%)
Current consumption (mA)		50
Output unit (mm/pulse)		0.1
Response frequency (kHz)		25
Output impedance (kΩ)		2.2
Output signal (V)	1(High)	11(MIN)
	0(Low)	0(MAX)

Cylinder weight (with brake/high load with brake sensor)

● With brake sensor: MFC-BS (Unit: kg)

Bore size (mm)	Product weight when stroke (S) = 0 mm					Additional weight per S = 100 mm
	Basic (00)	Foot (LA)		Flange (FA)	Flange (FB)	
		St = under 300 mm	St = 300 mm and over			
ø30	6.0	6.5	7.0	6.4	6.5	1.2
ø40	9.4	10.3	11.2	10.0	10.3	1.5
ø50	18.6	20.4	22.2	19.8	20.4	2.7
ø63	28.6	31.6	34.6	30.7	31.6	3.0
ø80	45.7	51.2	56.7	49.6	51.2	4.4

● High load with brake sensor: MFC-BSK (Unit: kg)

Bore size (mm)	Product weight when stroke (S) = 0 mm					Additional weight per S = 100 mm
	Basic (00)	Foot (LA)		Flange (FA)	Flange (FB)	
		St = under 300 mm	St = 300 mm and over			
ø30	8.4	9.2	10.0	9.0	9.1	1.2
ø40	13.0	14.5	15.9	13.9	14.3	1.5
ø50	26.6	29.3	32.0	28.2	29.1	2.7
ø63	41.3	45.7	50.1	44.0	45.4	3.0
ø80	66.3	73.9	81.5	71.0	73.4	4.4

Formula for product weight
(Example) Product weight of MFC-BS-FA-30B-200

● Product weight at 0 mm stroke (mounting: FA) ..... 6.4 kg
● Additional weight per 200 mm stroke ..... $1.2 \times \frac{200}{100}$ = 2.4 kg
● Product weight ..... 6.4 + 2.4 = 8.8 kg

How to order

MFC-BS - 00 - 30 B - 50

Ⓐ Model
Ⓑ Mounting *1
Ⓒ Bore size
Ⓓ Cushion
Ⓔ Stroke

Planned for end of production
February 2022

Code	Description
Ⓐ Model	
MFC-BS	With brake sensor
MFC-BSK	High load with brake sensor
Ⓑ Mounting	
00	Basic
LA	Rod side foot
FA	Rod side flange
FB	Head side flange
Ⓒ Bore size (mm)	
30	ø30
40	ø40
50	ø50
63	ø63
80	ø80
Ⓓ Cushion	
B	Both sides cushioned
R	Rod side cushioned
H	Head side cushioned
N	Without cushion

Ⓔ Stroke (mm)

Bore size	Stroke	Custom stroke
ø30	**5 to 500**	**In 5 mm increments**
ø40	**5 to 500**	
ø50	**5 to 1000**	
ø63	**5 to 1000**	
ø80	**5 to 1000**	

⚠ Precautions for model No. selection

*1: Mounting bracket will be shipped assembled with the product.

[Example of model No.]
MFC-BS-00-30B-50

Model: Robot cylinder
Ⓐ Model : With brake sensor
Ⓑ Mounting : Basic
Ⓒ Bore size : ø30 mm
Ⓓ Cushion : Both sides cushioned
Ⓔ Stroke : 50mm

Theoretical thrust table

(Unit: N)

Bore size (mm)	Operating direction	Working pressure MPa									
		0.15	0.2	0.3	0.4	0.5	0.6	0.7	0.8	0.9	1.0
ø30	Push	8.85 x 10	1.18×10^2	1.78×10^2	2.37×10^2	2.96×10^2	3.56×10^2	4.15×10^2	4.75×10^2	5.34×10^2	5.93×10^2
	Pull	1.05×10^2	1.41×10^2	2.12×10^2	2.82×10^2	3.53×10^2	4.24×10^2	4.94×10^2	5.65×10^2	6.36×10^2	7.06×10^2
ø40	Push	1.58×10^2	2.11×10^2	3.16×10^2	4.22×10^2	5.27×10^2	6.33×10^2	7.38×10^2	8.44×10^2	9.50×10^2	1.05×10^3
	Pull	1.88×10^2	2.51×10^2	3.76×10^2	5.02×10^2	6.28×10^2	7.53×10^2	8.79×10^2	1.00×10^3	1.13×10^3	1.25×10^3
ø50	Push	2.46×10^2	3.29×10^2	4.94×10^2	6.59×10^2	8.24×10^2	9.89×10^2	1.15×10^3	1.31×10^3	1.48×10^3	1.64×10^3
	Pull	2.94×10^2	3.92×10^2	5.89×10^2	7.85×10^2	9.81×10^2	1.17×10^3	1.37×10^3	1.57×10^3	1.76×10^3	1.96×10^3
ø63	Push	4.20×10^2	5.60×10^2	8.40×10^2	1.12×10^3	1.40×10^3	1.68×10^3	1.96×10^3	2.24×10^3	2.52×10^3	2.80×10^3
	Pull	4.67×10^2	6.23×10^2	9.35×10^2	1.24×10^3	1.55×10^3	1.87×10^3	2.18×10^3	2.49×10^3	2.80×10^3	3.11×10^3
ø80	Push	6.80×10^2	9.07×10^2	1.36×10^3	1.81×10^3	2.26×10^3	2.72×10^3	3.17×10^3	3.62×10^3	4.08×10^3	4.53×10^3
	Pull	7.52×10^2	1.00×10^3	1.50×10^3	2.01×10^3	2.51×10^3	3.01×10^3	3.51×10^3	4.02×10^3	4.52×10^3	5.02×10^3

LCM
LCR
LCG
LCW
LCX
STM
STG
STS/STL
STR2
UCA2
ULK*
JSK/M2
JSG
JSC3/JSC4
USSD
UFCD
USC
UB
JSB3
LMB
LML
HCM
HCA
LBC
CAC4
UCAC2
CAC-N
UCAC-N
RCS2
RCC2
PCC
SHC
MCP
GLC
MFC
BBS
RRC
GRC
RV3*
NHS
HRL
LN
Hand
Chuk
MecHnd/Chuk
ShkAbs
FJ
FK
SpdContr
Ending

Internal structure and parts list (with brake sensor)

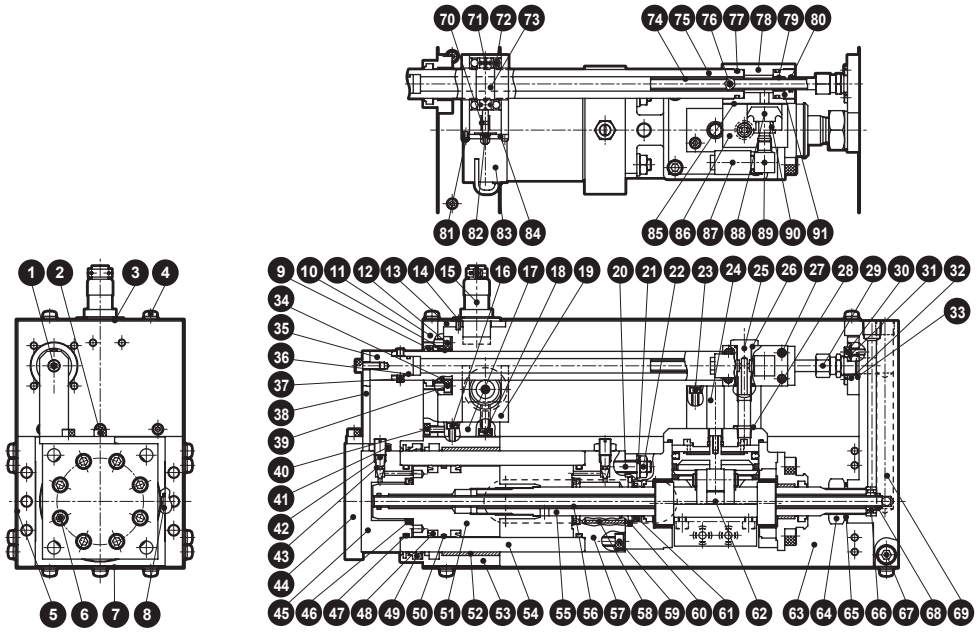

No.	Part name	Material	Remarks	No.	Part name	Material	Remarks
1	Hexagon socket head cap screw	Steel		46	Cushion packing	Nitrile rubber, steel	
2	Hexagon socket head cap screw	Steel		47	Gasket	Nitrile rubber	
3	Top cover	Steel plate		48	Piston packing	Nitrile rubber	
4	Cross-recessed pan head screw, captive washer	Steel		49	Dust wiper	Nitrile rubber	
5	Middle cover	Aluminum plate		50	Wear ring	Polyacetal resin	
6	Hexagon socket head cap screw	Steel		51	Piston	Aluminum alloy	
7	Bottom cover	Steel plate		52	Bush	Dry bearing	
8	Gasket	Nitrile rubber		53	Bearing housing	Cast iron	
9	Dust wiper	Nitrile rubber		54	Cylinder tube	Aluminum alloy	
10	Bush	Dry bearing		55	Piston rod	Steel	
11	Brake piping block (A)	Aluminum alloy		56	Pipe	Stainless steel	
12	Hexagon socket head cap screw	Steel		57	Rod cover	Cast iron	
13	Metal connector holder	Aluminum alloy (ø30)		58	Rotation-stop plate	Dry bearing	
		Steel (ø40 to ø80)		59	Hexagon socket head cap screw	Steel	
14	Cross-recessed flat head machine screw	Steel		60	Gasket	Nitrile rubber	
15	Metal connector			61	Rod packing	Nitrile rubber	
16	Hexagon socket head cap screw	Steel		62	Brake section		
17	Brake piping block (B)	Aluminum alloy		63	Side guide	Steel	
18	Hexagon socket head cap screw	Steel		64	Hexagon nut	Steel	
19	Detector	Aluminum alloy		65	Seal washer	Nitrile rubber, steel	
20	Hexagon socket head cap screw (ø30, ø40) Hexagon socket set screw (ø63 to ø80)	Steel		66	Pipe guide	Aluminum alloy	
				67	Hexagon socket head cap screw	Steel	
21	Spring washer	Steel	ø50 to ø80 only	68	Gasket	Nitrile rubber	
22	Hexagon nut	Steel	ø50 to ø80 only	69	Fixed guide	Cast iron	
23	Hexagon socket head cap screw	Steel		70	Coupling	Urethane rubber	
24	Spacer	Aluminum alloy	ø50 to ø80 only	71	Detection spring	Piano wire	
25	Nipple	Copper alloy		72	Ball bearing	Cast iron	
26	Gasket	Nitrile rubber		73	Rotor	Copper alloy	
27	Hexagon socket head cap screw	Steel		74	Piping pipe	Stainless steel	
28	Gasket	Nitrile rubber	ø50 to ø80 only	75	Piping rod	Steel	
29	Pipe joint	Copper alloy		76	Hexagon socket set screw	Steel	
30	Hexagon socket head cap screw	Steel		77	Gasket	Nitrile rubber	
31	Plain washer	Steel		78	Piping plate 1	Aluminum alloy	
32	Brake piping collar	Aluminum alloy		79	Bush	Dry bearing	
33	Gasket	Nitrile rubber		80	Piping packing	Nitrile rubber	
34	Brake piping holder	Steel		81	Cross-recessed pan head machine screw	Steel	
35	Piping end guide	Aluminum alloy		82	Cross-recessed flat head machine screw	Steel	
36	Gasket	Nitrile rubber		83	Rotary encoder		
37	Hexagon socket set screw	Steel		84	Encoder base	Aluminum alloy	
38	Piping end holder	Steel		85	QEV gasket	Rubber cork	
40	Hexagon socket head cap screw	Steel		86	QEV body	Aluminum alloy	
41	Needle nut	Steel		87	Silencer	Polyamide resin	
42	Cushion needle	Copper alloy		88	Quick exhaust valve packing	Nitrile rubber	
43	Gasket	Nitrile rubber		89	Elbow fitting	Copper alloy	
44	Head flange	Steel		90	Valve seat	Copper alloy	
45	Head cover	Cast iron		91	Piping plate 2	Aluminum alloy	

Note: Contact CKD when replacing repair parts.

Internal structure and parts list (with brake sensor/high load)

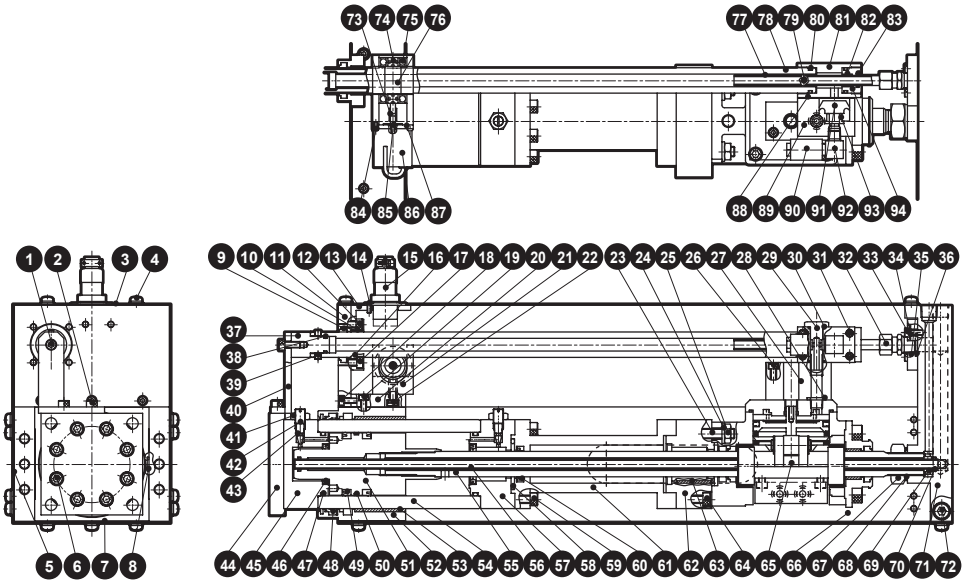

No.	Part name	Material	Remarks	No.	Part name	Material	Remarks
1	Hexagon socket head cap screw	Steel		47	Gasket	Nitrile rubber	
2	Hexagon socket head cap screw	Steel		48	Dust wiper	Nitrile rubber	
3	Top cover	Steel plate		49	Piston packing	Nitrile rubber	
4	Cross-recessed pan head screw, captive washer	Steel		50	Wear ring	Polyacetal resin	
5	Middle cover	Aluminum plate		51	Piston	Aluminum alloy	
6	Hexagon socket head cap screw	Steel		52	Bearing housing	Cast iron	
7	Bottom cover	Steel plate		53	Bush	Dry bearing	
8	Gasket	Nitrile rubber		54	Cylinder tube	Aluminum alloy	
9	Dust wiper	Nitrile rubber		55	Piston rod	Steel	
10	Bush	Dry bearing		56	Pipe	Stainless steel	
11	Brake piping block (A)	Aluminum alloy		57	Rod cover	Cast iron	
12	Hexagon socket head cap screw	Steel		58	Gasket	Nitrile rubber	
13	Metal connector holder	Aluminum alloy (ø30)		59	Hexagon socket head cap screw	Steel	
		Steel (ø40 to ø80)		60	Rod packing	Nitrile rubber	
14	Cross-recessed flat head machine screw	Steel		61	Packing holder	Steel	
15	Metal connector			62	Guide cover	Cast iron	
16	Brake piping holder	Steel		63	Rotation-stop plate	Dry bearing	
17	Hexagon socket head cap screw	Steel		64	Hexagon socket head cap screw	Steel	
18	Hexagon socket head cap screw	Steel		65	Brake section		
19	Hexagon socket head cap screw	Steel		66	Side guide	Steel	
20	Brake piping block (B)	Aluminum alloy		67	Hexagon nut	Steel	
21	Detector	Aluminum alloy		68	Seal washer	Nitrile rubber, steel	
22	Hexagon socket head cap screw	Steel		69	Pipe guide	Aluminum alloy	
23	Hexagon socket head cap screw (ø30, ø40) Hexagon socket set screw (ø63 to ø80)	Steel		70	Gasket	Nitrile rubber	
				71	Fixed guide	Cast iron	
24	Spring washer	Steel	ø50 to ø80 only	72	Hexagon socket head cap screw	Steel	
25	Hexagon nut	Steel	ø50 to ø80 only	73	Coupling	Urethane rubber	
26	Hexagon socket head cap screw	Steel		74	Detection spring	Piano wire	
27	Spacer	Aluminum alloy	ø50 to ø80 only	75	Ball bearing	Cast iron	
28	Gasket	Nitrile rubber	ø50 to ø80 only	76	Rotor	Copper alloy	
29	Nipple	Copper alloy		77	Piping pipe	Stainless steel	
30	Gasket	Nitrile rubber		78	Piping rod	Steel	
31	Hexagon socket head cap screw	Steel		79	Hexagon socket set screw	Steel	
32	Pipe joint	Copper alloy		80	Gasket	Nitrile rubber	
33	Hexagon socket head cap screw	Steel		81	Piping plate 1	Aluminum alloy	
34	Plain washer	Steel		82	Bush	Dry bearing	
35	Brake piping collar	Aluminum alloy		83	Piping packing	Nitrile rubber	
36	Gasket	Nitrile rubber		84	Cross-recessed pan head machine screw	Steel	
37	Piping end guide	Aluminum alloy		85	Cross-recessed flat head machine screw	Steel	
38	Gasket	Nitrile rubber		86	Rotary encoder		
39	Hexagon socket set screw	Steel		87	Encoder base	Aluminum alloy	
40	Piping end holder	Steel		88	QEV gasket	Rubber cork	
41	Needle nut	Steel		89	QEV body	Aluminum alloy	
42	Cushion needle	Copper alloy		90	Silencer	Polyamide resin	
43	Gasket	Nitrile rubber		91	Quick exhaust valve packing	Nitrile rubber	
44	Head flange	Steel		92	Elbow fitting	Copper alloy	
45	Head cover	Cast iron		93	Valve seat	Copper alloy	
46	Cushion packing	Nitrile rubber, steel		94	Piping plate 2	Aluminum alloy	

LCM
LCR
LCG
LCW
LCX
STM
STG
STS/STL
STR2
UCA2
ULK*
JSK/M2
JSG
JSC3/JSC4
USSD
UFCD
USC
UB
JSB3
LMB
LML
HCM
HCA
LBC
CAC4
UCAC2
CAC-N
UCAC-N
RCS2
RCC2
PCC
SHC
MCP
GLC
MFC
BBS
RRC
GRC
RV3*
NHS
HRL
LN
Hand
Chuk
MecHnd/Chuk
ShkAbs
FJ
FK
SpdContr
Ending

Dimensions

● MFC-BS(K) Basic dimensions (00)

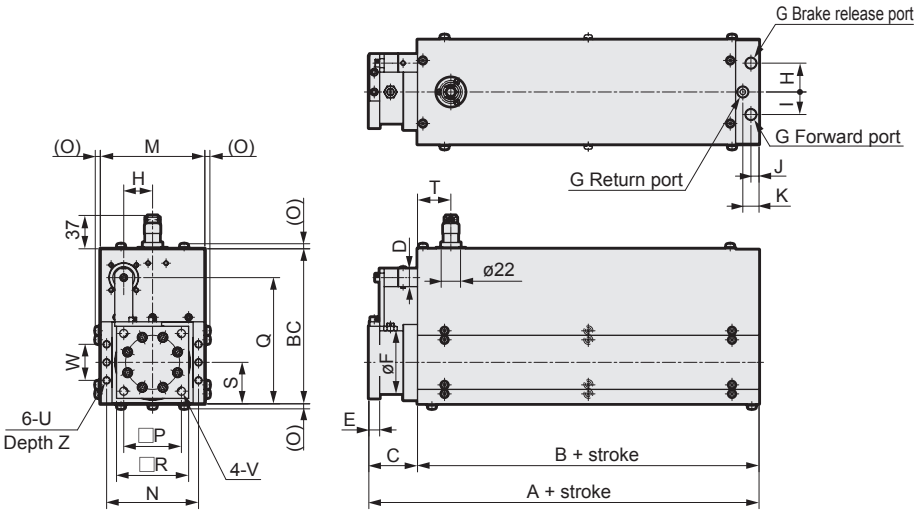

*1 : Codes with ○ indicate dimensions of high load.

Code / Bore size (mm)	Basic (00) basic dimensions																			
	A	(A)	B	(B)	BC	C	D	E	F	G	H	I	J	K	M	(M)	N	(N)	0	P
ø30	212	310	181	279	122	31	12	8	45	Rc1/8	20	20	8	15	80	86	69	72	5	40
ø40	238	352	198	312	162	40	16	10	55	Rc1/8	25	20	8	16	90	96	79	82	5	50
ø50	333	487	279	433	172	54	20	12	70	Rc1/4	32	25	9	18	116	124	102	106	6	64
ø63	375	573	312	510	188	63	20	16	85	Rc1/4	32	25	9	18	136	144	122	126	6	80
ø80	443	667	370	594	225	73	25	19	110	Rc3/8	36	35	14	28	174	180	156	159	6	100

Code / Bore size (mm)	Basic (00) basic dimensions								
	Q	R	S	T	U	V	W	Z	(Z)
ø30	88	52	31	55	M 6	7	30	10	12
ø40	105	63	36	40	M 6	7	35	10	12
ø50	140	80	46	37	M 8	9	40	12	15
ø63	161	100	56	37	M10	11	58	15	18
ø80	196	125	71	37	M12	14	80	18	20

● Rod side foot (LA)

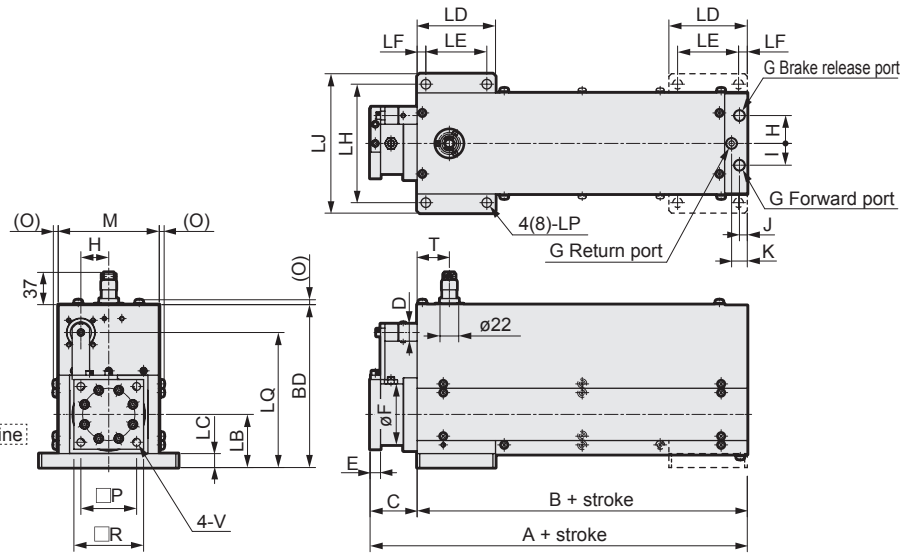

*1 : Codes with ○ indicate dimensions of high load.
*2 : The following strokes include the dotted line area.
For ø30.....300 mm or more
For ø40.....300 mm or more
For ø50.....400 mm or more
For ø63.....500 mm or more
For ø80.....500 mm or more

Code / Bore size (mm)	Rod side foot (LA) basic dimensions																			
	A	(A)	B	(B)	BD	(BD)	C	D	E	F	G	H	I	J	K	LB	(LB)	LC	(LC)	LD
ø30	212	310	181	279	131	133	31	12	8	45	Rc1/8	20	20	8	15	40	42	10	12	60
ø40	238	352	198	312	173	177	40	16	10	55	Rc1/8	25	20	8	16	47	51	12	16	70
ø50	333	487	279	433	187	190	54	20	12	70	Rc1/4	32	25	9	18	61	64	16	19	90
ø63	375	573	312	510	206	209	63	20	16	85	Rc1/4	32	25	9	18	74	77	19	22	110
ø80	443	667	370	594	246	249	73	25	19	110	Rc3/8	36	35	14	28	92	95	22	25	140

Code / Bore size (mm)	Rod side foot (LA) basic dimensions																		
	(LD)	LE	(LE)	LF	(LF)	LH	(LH)	LJ	(LJ)	LP	(LP)	LQ	(LQ)	M	(M)	O	P	R	T	V
ø30	70	46	50	7	10	90	104	106	124	7	9	97	99	80	86	5	40	52	55	7
ø40	80	50	54	10	13	114	120	134	146	9	11	116	120	90	96	5	50	63	40	7
ø50	100	70	70	10	15	136	152	160	182	11	14	155	158	116	124	6	64	80	37	9
ø63	120	86	84	12	18	162	178	190	214	14	16	179	182	136	144	6	80	100	37	11
ø80	150	114	110	13	20	200	218	236	258	16	18	217	220	174	180	6	100	125	37	14

Dimensions

● Rod side flange (FA)

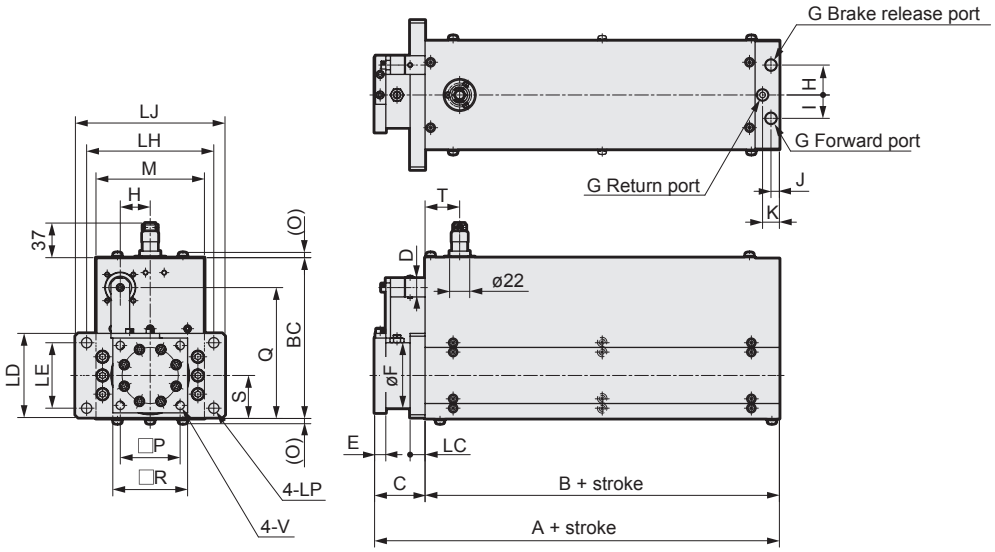

*1 : Codes with ○ indicate dimensions of high load.

Code	Rod side flange (FA) basic dimensions																			
Bore size (mm)	A	(A)	B	(B)	BC	C	D	E	F	G	H	I	J	K	LC	(LC)	LD	LE	(LE)	LH
ø30	212	310	181	279	122	31	12	8	45	Rc1/8	20	20	8	15	10	12	60	46	40	90
ø40	238	352	198	312	162	40	16	10	55	Rc1/8	25	20	8	16	12	16	70	50	44	114
ø50	333	487	279	433	172	54	20	12	70	Rc1/4	32	25	9	18	16	19	90	70	60	136
ø63	375	573	312	510	188	63	20	16	85	Rc1/4	32	25	9	18	19	22	110	86	74	162
ø80	443	667	370	594	225	73	25	19	110	Rc3/8	36	35	14	28	22	25	140	114	100	200

Code	Rod side flange (FA) basic dimensions													
Bore size (mm)	(LH)	LJ	(LJ)	LP	(LP)	M	(M)	O	P	Q	R	S	T	V
ø30	104	106	124	7	9	80	86	5	40	88	52	31	55	7
ø40	120	134	146	9	11	90	96	5	50	105	63	36	40	7
ø50	152	160	182	11	14	116	124	6	64	140	80	46	37	9
ø63	178	190	214	14	16	136	144	6	80	161	100	56	37	11
ø80	218	236	258	16	18	174	180	6	100	196	125	71	37	14

● Head side flange (FB)

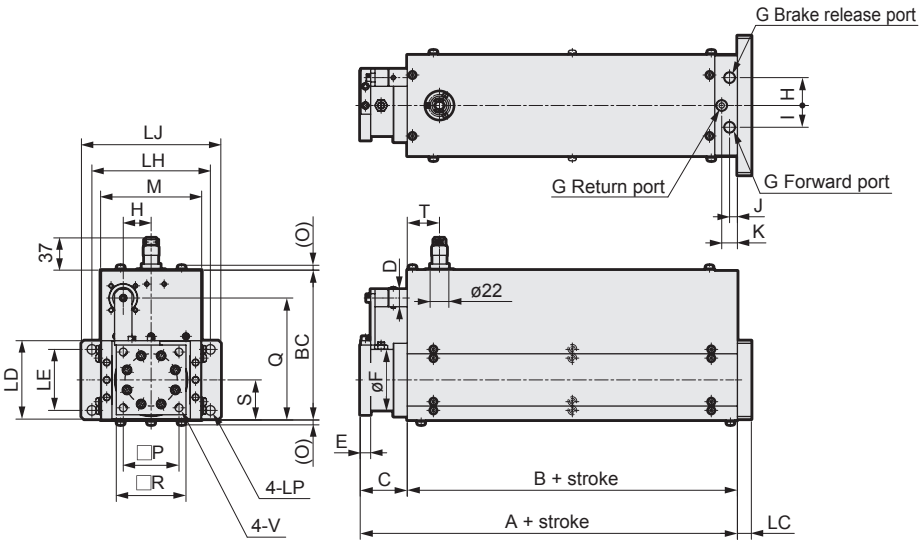

*1 : Codes with ○ indicate dimensions of high load.

Code	Head side flange (FB) basic dimensions																			
Bore size (mm)	A	(A)	B	(B)	BC	C	D	E	F	G	H	I	J	K	LC	(LC)	LD	LE	(LE)	LH
ø30	212	310	181	279	122	31	12	8	45	Rc1/8	20	20	8	15	10	12	60	46	40	90
ø40	238	352	198	312	162	40	16	10	55	Rc1/8	25	20	8	16	12	16	70	50	44	114
ø50	333	487	279	433	172	54	20	12	70	Rc1/4	32	25	9	18	16	19	90	70	60	136
ø63	375	573	312	510	188	63	20	16	85	Rc1/4	32	25	9	18	19	22	110	86	74	162
ø80	443	667	370	594	225	73	25	19	110	Rc3/8	36	35	14	28	22	25	140	114	100	200

Code	Head side flange (FB) basic dimensions													
Bore size (mm)	(LH)	LJ	(LJ)	LP	(LP)	M	(M)	O	P	Q	R	S	T	V
ø30	104	106	124	7	9	80	86	5	40	88	52	31	55	7
ø40	120	134	146	9	11	90	96	5	50	105	63	36	40	7
ø50	152	160	182	11	14	116	124	6	64	140	80	46	37	9
ø63	178	190	214	14	16	136	144	6	80	161	100	56	37	11
ø80	218	236	258	16	18	174	180	6	100	196	125	71	37	14

Robot cylinder with brake sensor flow chart

(1) The number of pulse signals is generated according to the travel distance of the sleeve from the robot cylinder.
(2) At the preset value of the CELLCON controller, an OFF signal is outputted to the solenoid valve for brake release and to the direction switching valve.
(3) The piston brakes will make an immediate intermediate stop.
(4) In response to signals output from the CELLCON controller, the sleeve moves forward or backward and stops at the next set position.

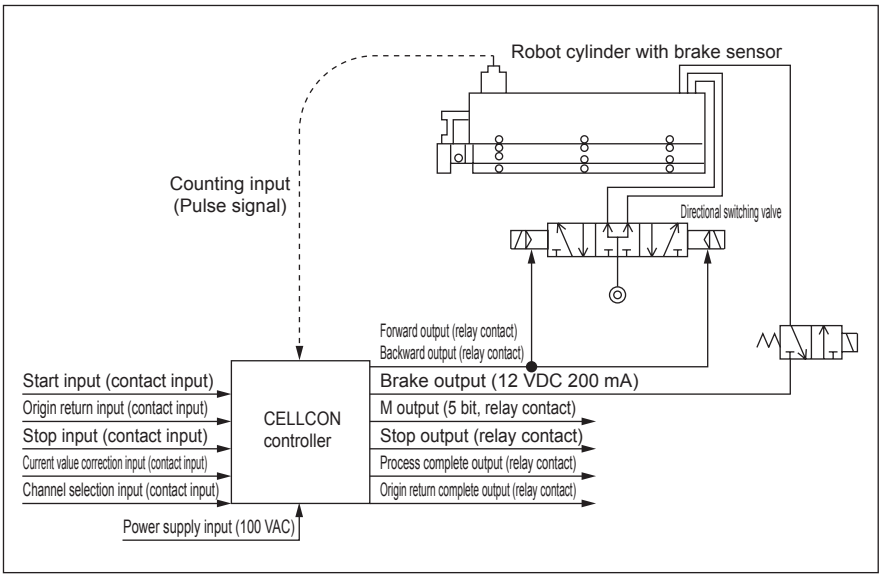

Stopping accuracy and overrun distance

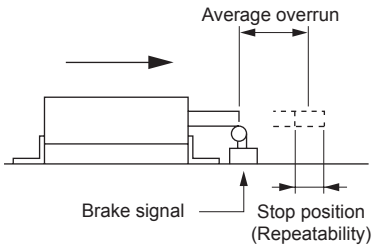

Characteristics table at right shows the value at no load, and 1 m pipe length between brake release port and valve.

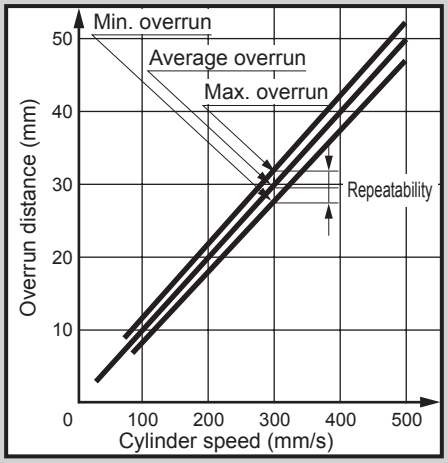

MEMO

LCM
LCR
LCG
LCW
LCX
STM
STG
STS/STL
STR2
UCA2
ULK*
JSK/M2
JSG
JSC3/JSC4
USSD
UFCD
USC
UB
JSB3
LMB
LML
HCM
HCA
LBC
CAC4
UCAC2
CAC-N
UCAC-N
RCS2
RCC2
PCC
SHC
MCP
GLC
MFC
BBS
RRC
GRC
RV3*
NHS
HRL
LN
Hand
Chuk
MecHnd/Chuk
ShkAbs
FJ
FK
SpdContr
Ending

Selection guide

Conditions.....Stroke 300 (mm), load on the end (196 N), eccentricity 200 (mm)
Distance from flange end to center of gravity of load 100 (mm)

(1) First, calculate lateral load moment L·M.

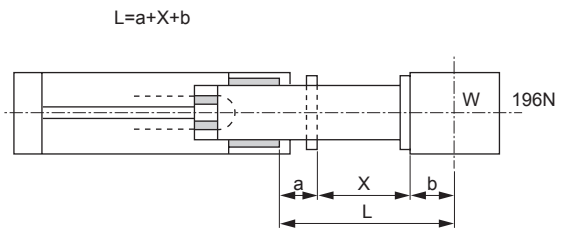

a: Dimensions of projecting section (m)
b: Distance from flange end to center of gravity of load (m)
X: Stroke (m)

* First, substitute 0.067 (m) of intermediate bore size for ø50 for a dimension.

L = 0.067 + 0.3 + 0.1 L·W = 0.467 x 196 = 91.5 (N·m)
= 0.467(m)
W = 196N

(2) Calculate the rotation torque L'·W'.

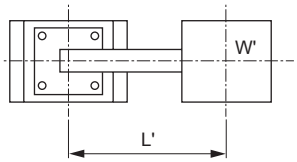

W' = 196 (N)
L' = 0.2 (m)

L'·W' = 0.2 x 196 = 39.2 (N·m)

(3) Obtain total moment M.
M = (lateral load moment L·W) + (angular moment L'·W')
= 91.5 + 39.2 = 130.7 (N·m)

(4) Find the bore size that meets conditions with 300 mm stroke according to maximum allowable moment table.
In this case, ø50 bore is obtained. (when close to allowable value, increase the bore size.)
*When bore size selected here is any size other than ø50, substitute a dimension of the bore size selected at (4) for (1) again, and select the model for the rest according to steps (3) → (4).

(5) Read the min. working pressure at M = 130.7(N·m) from the graph.
Graph shows 0.35 MPa.

Selection method

Conditions.....Stroke 300 mm, load on the end 196 N

(1) Determine the bore size according to stroke: maximum allowable load table on the following page.
For above conditions, the value that meets 300 mm stroke and 196 N is ø50 bore size.

(2) Find the distance from the shoulder of the robot cylinder to the center of gravity of the load on the tip.

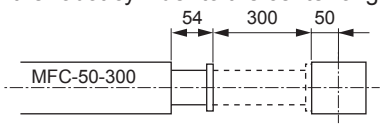

(Distance from end of flange to center of gravity should be 50 mm.)

L = 54 + 300 + 50 = 404(mm)
= 0.404(m)

(3) Calculate self-weight moment caused by the tube, etc.

$M = 0.3^2/2 \times 15 \times 9.8 + 0.404 \times 3.6 \times 9.8$
$= 6.615 + 14.253 = 20.868 \approx 20.9$ (N·m)
$W \cdot L + M = 196 \times 0.404 + 20.9 = 100.08 \approx 100.1$ (N·m)

(4) The graph of MFC-50 at 100.1 (N·m) shows that the min. working pressure is 0.27 (MPa) with load on the end of 196 (N) and center of gravity 50 (mm) for MFC-50-300.

LCM
LCR
LCG
LCW
LCX
STM
STG
STS/STL
STR2
UCA2
ULK*
JSK/M2
JSG
JSC3/JSC4
USSD
UFCD
USC
UB
JSB3
LMB
LML
HCM
HCA
LBC
CAC4
UCAC2
CAC-N
UCAC-N
RCS2
RCC2
PCC
SHC
MCP
GLC
MFC
BBS
RRC
GRC
RV3*
NHS
HRL
LN
Hand
Chuk
MecHnd/Chuk
ShkAbs
FJ
FK
SpdContr
Ending

Stroke: Max. allowable load table

(Unit: N)

Specifications	Standard					High load				
Bore size (mm) / Stroke (mm)	ø30	ø40	ø50	ø63	ø80	ø30	ø40	ø50	ø63	ø80
50	428	688	1552	1971	3206	653	1050	2365	3018	4925
75	335	549	1271	1632	2687	514	843	1945	2512	4150
100	274	456	1073	1390	2307	423	703	1650	2150	3582
150	199	336	813	1063	1785	312	526	1263	1665	2807
200	153	263	650	854	1443	246	419	1021	1355	2301
300	101	178	453	598	1017	170	295	733	980	1679
400	70	128	337	445	760	128	224	567	760	1309
500	50	95	260	342	579	101	179	458	615	1060
600	-	-	203	266	454	-	-	380	512	885
700	-	-	160	208	355	-	-	322	434	752
800	-	-	129	161	273	-	-	276	372	646
900	-	-	95	121	204	-	-	240	323	560
1000	-	-	70	87	145	-	-	209	281	482

Note: Lateral load differs depending on bore size and stroke.
Refer to the value above to select the model.

Stroke: Max. allowable moment table

(Unit: N·m)

Specifications	Standard					High load				
Bore size (mm) / Stroke (mm)	ø30	ø40	ø50	ø63	ø80	ø30	ø40	ø50	ø63	ø80
50	40.3	70.9	181.6	248.4	436.1	61.4	108.2	276.7	380.3	669.9
75	39.9	70.4	180.5	246.6	432.7	61.2	108	276.2	379.4	668.2
100	39.5	69.8	179	245	429	61.1	108	276	379	667
150	38.6	68.4	177.3	240.4	421.4	60.6	106.9	274.2	376.3	662.5
200	37.5	66.8	174	236	413	60	106	273	374	658
300	34.8	62.9	167	225	393	58.7	104	269	369	649
400	31.5	58.1	158	212	370	57	102	265	362	637
500	27.4	52.5	148	197	340	55	99	260	355	622
600	-	-	136	181	312	-	-	254	347	608
700	-	-	123	162	279	-	-	248	337	592
800	-	-	108	141	242	-	-	240	327	573
900	-	-	92.4	118	202	-	-	232	316	553
1000	-	-	74.8	93.8	158	-	-	223	303	531

Total moment M = (lateral load moment L·W) + (angular moment L'·W')

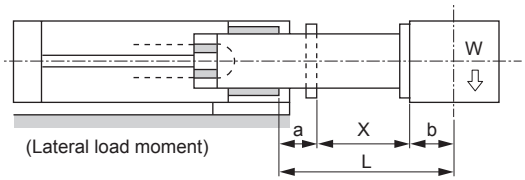

(Lateral load moment)

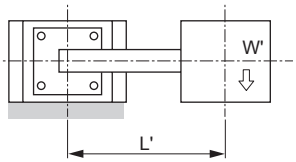

(Rotation moment)

W : Load (N)
L = a + x + b(m)
x : Stroke (m)
b : Distance from flange end to center of gravity of load (m)
a : Dimensions of projecting section (m)

Unit (m)

Bore size (mm) / Code	ø30	ø40	ø50	ø63	ø80
a	0.04	0.053	0.067	0.076	0.086

⚠ Note: Load direction

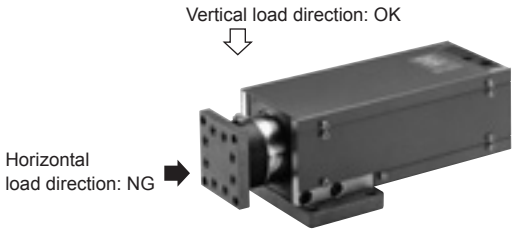

LCM
LCR
LCG
LCW
LCX
STM
STG
STS/STL
STR2
UCA2
ULK*
JSK/M2
JSG
JSC3/JSC4
USSD
UFCD
USC
UB
JSB3
LMB
LML
HCM
HCA
LBC
CAC4
UCAC2
CAC-N
UCAC-N
RCS2
RCC2
PCC
SHC
MCP
GLC
MFC
BBS
RRC
GRC
RV3*
NHS
HRL
LN
Hand
Chuk
MecHnd/Chuk
ShkAbs
FJ
FK
SpdContr
Ending

Relation between torque and min. working pressure

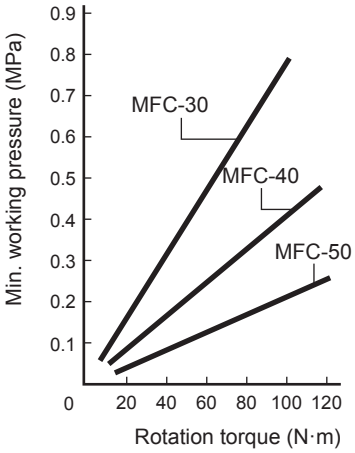

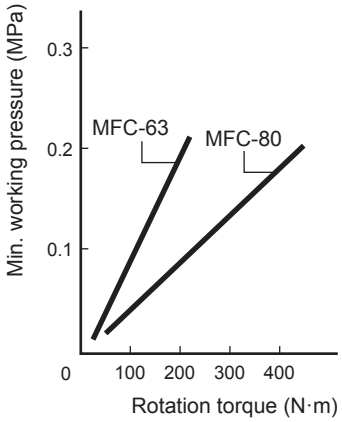

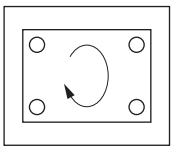

Relation between load and min. working pressure for stroke

M: Self-weight moment by tube, etc. (N·m)

$$M = \frac{X^2}{2} \times ag + L \cdot Fg \left\{ = \frac{X^2}{2} \times a + L \cdot F \right\}$$

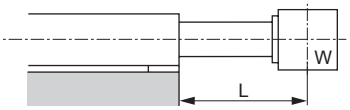

Bore size (mm)	a	F
ø30	7	1.0
ø40	9	1.7
ø50	15	3.6
ø63	20	6.1
ø80	35	11.5

X: Stroke (m)
a: Tube weight (kg) per 1 m
F: The end of flange/head cover weight (kg)
W: Load on tip (N)
L: Distance (m) from center of gravity of load on tip W to shoulder of robot cylinder

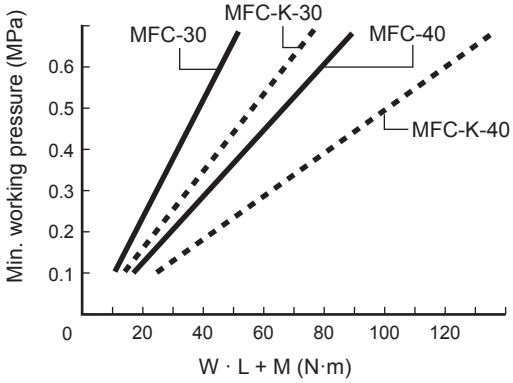

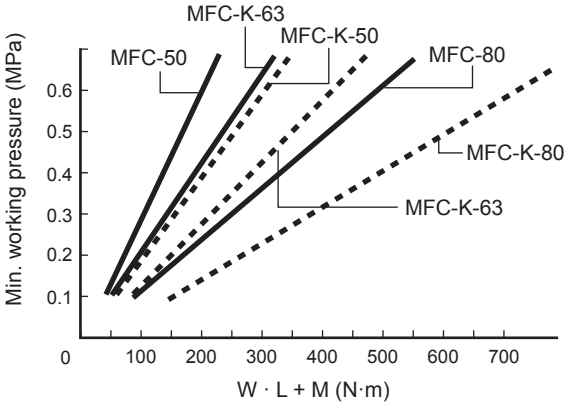

Note: Select within the max. allowable load. (70% or less of the max. allowable load is ideal.)

When stroke load and rotation torque activate at the same time, the min. working pressure is their sum.

Graph of min. working pressure - total moment

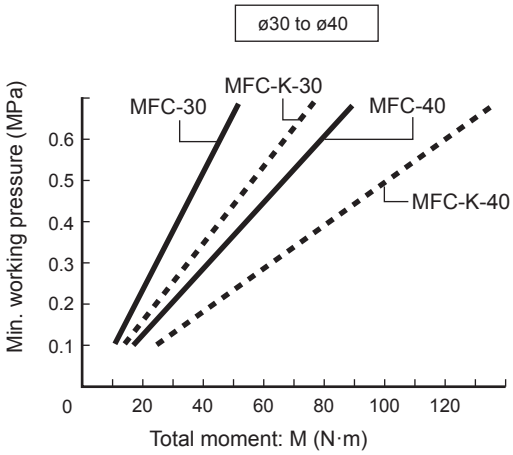

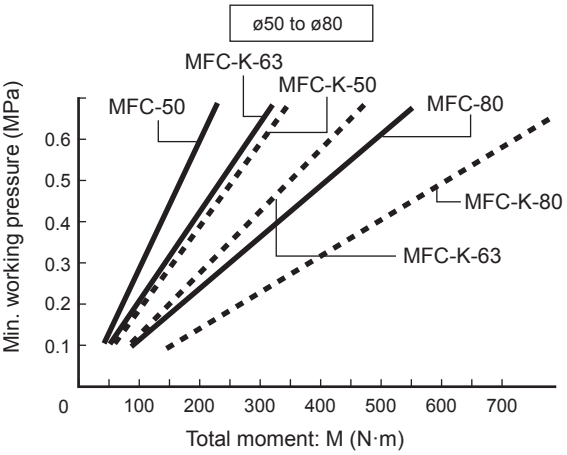

LCM
LCR
LCG
LCW
LCX
STM
STG
STS/STL
STR2
UCA2
ULK*
JSK/M2
JSG
JSC3/JSC4
USSD
UFCD
USC
UB
JSB3
LMB
LML
HCM
HCA
LBC
CAC4
UCAC2
CAC-N
UCAC-N
RCS2
RCC2
PCC
SHC
MCP
GLC
MFC
BBS
RRC
GRC
RV3*
NHS
HRL
LN
Hand
Chuk
MecHnd/Chuk
ShkAbs
FJ
FK
SpdContr
Ending

Play of lateral direction, backlash of rotating direction

Calculate the backlash value according to the following formula.

1) Play in the lateral direction

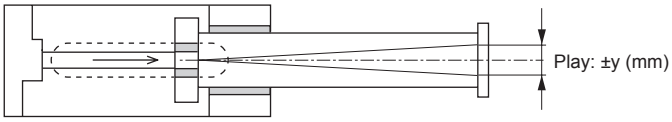

2) Play in the rotating direction

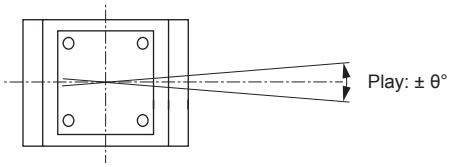

Standard

Bore size (mm)	Play: ±y (mm)	Stroke (mm)		
		100	500	1000
ø30	y = (78 + stroke) x 6 x 10^{-3}	1.07	3.47	—
ø40	y = (92 + stroke) x 5.3 x 10^{-3}	1.02	3.14	—
ø50	y = (119 + stroke) x 3.9 x 10^{-3}	0.85	2.41	4.36
ø63	y = (143 + stroke) x 3 x 10^{-3}	0.73	1.93	3.43
ø80	y = (162 + stroke) x 2.7 x 10^{-3}	0.71	1.79	3.14

Bore size (mm)	Play: ± θ°
ø30	0.15°
ø40	0.14°
ø50	0.11°
ø63	0.087°
ø80	0.068°

High load

Bore size (mm)	Play: ±y (mm)	Stroke (mm)		
		100	500	1000
ø30	y = (143 + stroke) x 2 x 10^{-3}	0.49	1.29	—
ø40	y = (168 + stroke) x 1.8 x 10^{-3}	0.48	1.20	—
ø50	y = (222 + stroke) x 1.3 x 10^{-3}	0.42	0.94	1.59
ø63	y = (275 + stroke) x 1.0 x 10^{-3}	0.38	0.78	1.28
ø80	y = (311 + stroke) x 9 x 10^{-4}	0.37	0.73	1.18

Applications of diversely multifunctional robot cylinder

Applications

1 Movement to conveyor

Directly install a conveying pallet on the top of robot cylinder, lift up products one by one, and move them to the conveyor by an air cylinder.

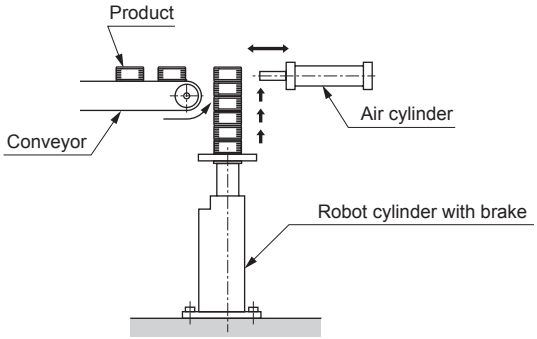

3 Nut mounting to slanted plate

Install a robot cylinder which moves in slanted direction on the top of robot cylinder that moves horizontally, then install a nut runner on the top of that. Operate both robot cylinders systematically and mount the nut on the slanted plate.

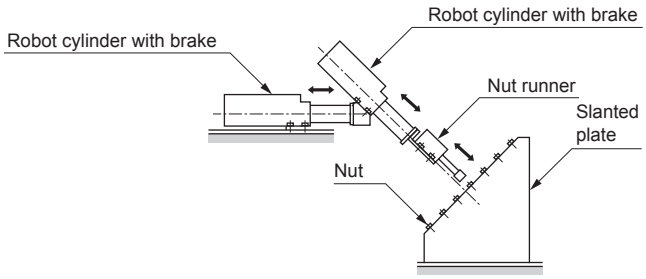

2 Nut installation

Install a nut runner on the top of robot cylinder, and perform nut fixing. Since nut height differs depending on the manufacturing lot, adjust the height by changing the stop position of robot cylinder.

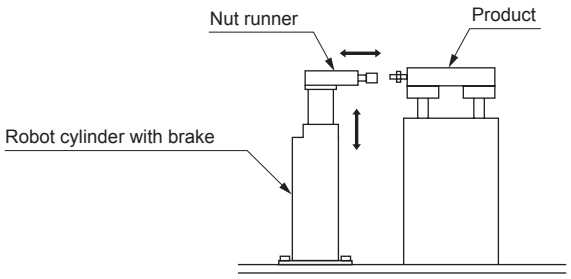

4 Loader and unloader

Using a simple robot with robot cylinder, load and unload workpieces to machine A and B.
X-axis and Y-axis each use robot cylinder with brake and sensor.

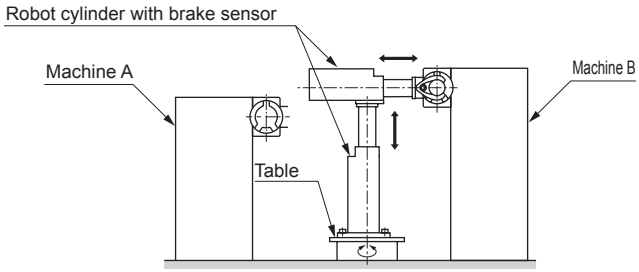

Pneumatic components

Safety Precautions

Be sure to read this section before use.

Refer to Intro Page 73 for general information of the cylinder, and to Intro Page 80 for general information of the cylinder switch.

Product-specific cautions : Robot cylinder MFC Series

Design/selection

⚠ WARNING

■ Design a structure that prevents person(s) from coming into contact with the driven workpiece as well as the moving parts of the cylinder with brakes.

Provide a protective cover so that no human body directly touches the unit. In case of possible contact, provide safety measures such as a sensor for emergency stop before making contact and a buzzer to warn of danger.

■ Use a balanced circuit that accommodates the protrusion of the piston rod.

If the cylinder is stopped part-way in the stroke with the brake, etc., and air pressure is applied to one side of the cylinder, the piston rod will pop out at high speeds when the brake is released. This could cause physical harm, such as pinched hands or feet, or mechanical damage. Use a balance circuit, such as the basic circuit, to prevent popping out.

■ The holding force (max. static load) is the ability to hold static load that is not accompanied by vibration or shock, in a state where the brake is operating under no load.

Take care when constantly using near the upper limit of the holding force.

■ Do not apply loads with impact, strong vibration, or torque while brakes are activated.

If load is externally applied with impact, or if strong vibration or rotational force is externally applied, the holding force can be reduced, creating a dangerous situation.

■ Consider the stopping accuracy and overrun distance during the braking.

Because a mechanical lock is applied, the cylinder does not stop instantly when the stop signal is issued, but stops with a time-wise delay. The stroke at which the cylinder slides due to this delay is the overrun distance. In addition, the max. and min. width of the overrun distance is the stopping accuracy.

- To achieve the required stop position, move the limit switch forward by the overrun distance.
- The limit switch must have a detection length (dog length) of the overrun distance + α.
- The operating range of CKD cylinder switches is 7 to 16 mm, depending on the switch model. If overrun distance exceeds this, provide self-holding of the contact at the switch load.

■ In order to improve stopping accuracy, ensure that the brake stops the cylinder as soon as possible after receiving the stop signal.

Use a high-response DC control electricity circuit or solenoid valve, and set the solenoid valve as close to the cylinder as possible.

■ The stopping accuracy is susceptible to fluctuations in piston speed.

If the piston speed changes due to load fluctuations or by some disturbance while the cylinder is moving, the stopping position may vary sharply. Make sure that the piston speed stays the same up to just before the stop position. As well, since the speed changes significantly in the cushioned range and in the acceleration range after starting operation, the variability of the stopping position will increase.

■ Basic circuit

● Horizontal load

When piping is as shown in Fig. 6, equal pressure is applied to both ends of the piston when stopped to prevent the cylinder tube from popping out when the brakes are released. Install a regulator with check valve on the head side to maintain thrust balance.

Fig. 6

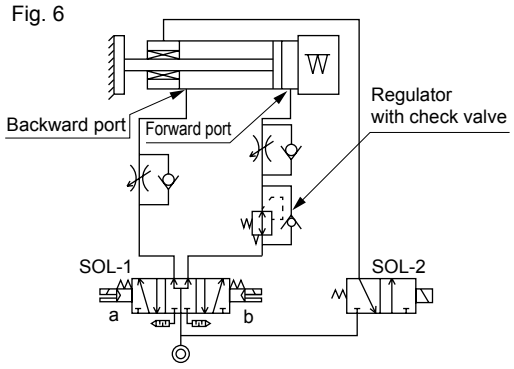

ⓐSOL-1ⓑ		SOL-2	Operational status
OFF	OFF	OFF	Stop
ON	OFF	ON	Reverse
OFF	ON	ON	Forward

● For upward vertical load

If the load is facing upward as shown in Fig.7, the cylinder tube moves incorrectly in the load direction when brakes are released. Install a regulator with a check valve on the rod side to reduce thrust in the load direction and balance the load.

Fig. 7

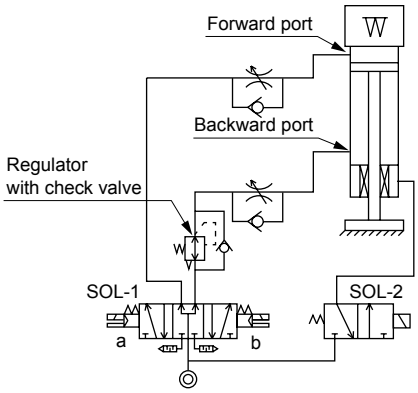

ⓐSOL-1ⓑ		SOL-2	Operational status
OFF	OFF	OFF	Stop
ON	OFF	ON	Rise
OFF	ON	ON	Drop

● For downward vertical load

If the load is facing downward as shown in Fig.8, the cylinder tube moves incorrectly in the load direction when brakes are released. Install a regulator with a check valve on the head side to reduce thrust in the load direction and balance the load.

Fig. 8

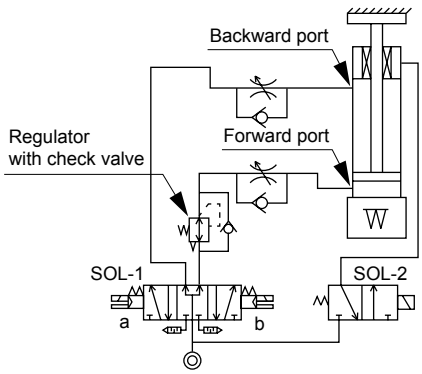

ⓐSOL-1ⓑ		SOL-2	Operational status
OFF	OFF	OFF	Stop
ON	OFF	ON	Rise
OFF	ON	ON	Drop

■ If back pressure is applied to the locking mechanism, the lock may be released. Use a discrete brake release solenoid valve, or use an individual exhaust manifold.

■ Use a 3-position PAB connection (pressurization on both sides) solenoid valve for the cylinder drive to prevent the piston from popping out when starting.

■ To maintain balance of the thrust, including the load, the side with the larger thrust should have a regulator with a check valve.

⚠ CAUTION

■ Stopping accuracy

● Stopping pitch and load factor

Stopping accuracy differs with stopping pitch and load factor. The load factor below is recommended for achieving specified stopping accuracy.

Stop pitch	Load factor
50 mm or less	20% of thrust
50 mm to 100 mm	40% of thrust
100 mm or more	60% of thrust

● Selection of solenoid for brake

The stopping accuracy and overrun distance will change according to the responsiveness of the solenoid valve for brake. Use a solenoid valve described in the Related Products Selection Guide. Connect the solenoid valve directly to the brake port to improve stopping accuracy.

● When using a PLC

If a PLC is used as the electric control unit for the solenoid valve for brake, stopping accuracy drops due to scan time (computing time). When using a PLC, do not assemble the solenoid valve for brake into the PLC circuit.

■ Do not make major changes in applied load when stopped with brakes, or the stopping position may change.

Mounting, installation and adjustment

⚠ WARNING

■ If attaching a jig or other device to the end flange, retract the cylinder tube all the way to the stroke end and fasten the jig so that the allowable lateral load or torque of the cylinder and cylinder tube will not be exceeded.

■ Release brakes before coupling the load to the end of the rod.

■ If the brake is released while air is applied to only one side of the cylinder, the piston rod can pop out at high speed, creating a dangerous situation. When releasing the brake during adjustment or other maintenance, always observe the following:

- Check that no one is in the movable range of the load and that no problems will arise if the load moves when brakes are released.
- When releasing the brake, perform position locking or take other measures:
  ·Place the load to the bottom end
  ·Pressurize both sides
  ·Place a strut
  to prevent the load from falling.
- Confirm that air is not pressured on only one side of the cylinder when releasing brakes.

■ How to manually release the brake (ø50 to ø80)

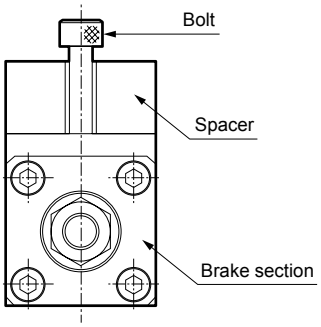

[MFC50 to 80]

- The brakes are released when a bolt is screwed into the female thread on the top of the brakes.
  Always remove the release bolt during normal use.
- The appropriate bolt size and screw insertion depth are shown in the following table.

Bore size (mm)	Bolt size		Screw insertion depth
	Nominal	Length	
ø50	M10	65 or more	4 rotations or less
ø63	M12	45 or more	
ø80	M14	55 or more	

■ (ø50 to ø80) When manually releasing the brakes, the brakes can be released by screwing a bolt into the brake release female screws. However, if the bolt is screwed in too far, the brakes could be damaged. Therefore, always screw in with the optimal number of turns.

■ Brakes are released manually (ø50 to ø80) or by pressurizing the brake release port. When mounting the load, the brake release operation may cause the load to fall; make sure to check that the brake is operational when the manual release operation is set to default or when there is no air in the brake release port.

■ Do not apply to the cylinder any force that exceeds the brake holding force listed in the catalog.

■ If there is any play, such as looseness, in the brake signal dog, stopping accuracy is affected. Securely fix to eliminate play, etc.

■ If the cylinder speed is fast, the detection dog must be long enough to match relay response time. If the dog is short, the stop signal is not output and operation does not stop.

⚠ CAUTION

■ Adjust the air balance in the cylinder.
With brakes released, place a load on the cylinder and balance the load by adjusting pneumatic pressure applied to the cylinder rod side and head side. Malfunctions such as the cylinder tube popping out during brake release or abnormal brake release can be prevented by accurately balancing the load.

■ Adjust the installation position of the detector parts, including the cylinder switch.
When braking, consider the overrun distance vis-a-vis the desired stop position and adjust the installation positions for detector parts, including the cylinder switch.

■ Load fluctuations during the reciprocating stroke of the cylinder can cause inconsistent piston speed, leading to greater variation in the stop position. Adjust the mounting of the load so as to prevent any load fluctuations during the reciprocating stroke of the cylinder, especially before the stop position.

LCM
LCR
LCG
LCW
LCX
STM
STG
STS/STL
STR2
UCA2
ULK*
JSK/M2
JSG
JSC3/JSC4
USSD
UFCD
USC
UB
JSB3
LMB
LML
HCM
HCA
LBC
CAC4
UCAC2
CAC-N
UCAC-N
RCS2
RCC2
PCC
SHC
MCP
GLC
MFC
BBS
RRC
GRC
RV3*
NHS
HRL
LN
Hand
Chuk
MecHnd/Chuk
ShkAbs
FJ
FK
SpdContr
Ending

Mounting, installation and adjustment

■ Since the speed changes significantly in the cushioned range and in the acceleration range after starting operation, the variability of the stopping position will increase. For this reason, the accuracy described in the specifications may not be obtained when a step just after start of the operation has a short stroke length to the next point.

■ Tube sliding section maintenance
Be careful to avoid scratching or denting the sliding section of the cylinder tube. Such scratches and dents can cause damage to packings, resulting in leakage and/or brake failure.

Use/maintenance

⚠ WARNING

■ The required grease is applied to brakes. Avoid applying extra grease and do not wipe grease off.

■ Always use the product with the dust cover on, except for when performing manual release, in order to prevent failure or malfunction.

⚠ CAUTION

■ Air supply pipes that are too narrow or too long can reduce stopping accuracy.

■ Frictional resistance increases and causes the piston speed to change when the cylinder has been stopped for a long time, such as when using first thing in the morning or afternoon. This may impair stopping accuracy. Conduct conditioning operations to obtain a stable stopping accuracy.

BBS

Balancer unit

ø50/ø63/ø80/ø100

Special

Overview

The balancer unit allows heavy loads of around 300 kg to be controlled with minimal force. Even if the weight of each workpiece being transported differs, this is automatically recognized and the optimal balance is maintained.

CONTENTS

Product introduction	1254
Series variation	1256
● Auto pressure adjustment (BBS-A)	1258
● Fixed pressure adjustment (BBS-O)	1270
Accessory dimensions	1274
Technical data	1275
⚠ Safety precautions	1278

Move objects weighing up to 300 kg effortlessly!

Balancer Unit

BBS Series

BBS-A [Automatic pressure adjustment]
BBS-O [Fixed pressure adjustment]

- Minimal force moves objects weighing up to 285 kg!
- Ensure personnel safety at sites where heavy objects are handled.
- No more inching along! Objects glide as if guided by hand.

ø50 ø63 ø80 ø100

No adjustment is needed when the workpiece is changed!
BBS-A type can be adjusted to the ideal condition by switching with one button without complicated adjustment.

Easy to balance just by switching
BBS-O type need be adjusted only one time according to jig and workpiece.
Can be used just by switching it.

Brakes to ensure safety as standard
Highly reliable brakes are equipped as standard. Even if the air source is cut off, the workpiece does not drop or pop up when air is restored.

Compatible with all-air methods (option)
An all-air method that does not need electricity can be set up.
This is applicable in atmospheres that must be explosion-proof.

LCM
LCR
LCG
LCW
LCX
STM
STG
STS/STL
STR2
UCA2
ULK*
JSK/M2
JSG
JSC3/JSC4
USSD
UFCD
USC
UB
JSB3
LMB
LML
HCM
HCA
LBC
CAC4
UCAC2
CAC-N
UCAC-N
RCS2
RCC2
PCC
SHC
MCP
GLC
MFC
BBS
RRC
GRC
RV3*
NHS
HRL
LN
Hand
Chuk
MecHnd/Chuk
ShkAbs
FJ
FK
SpdContr
Ending

Balancer unit BBS Series

Variation	Model No.	Bore size (mm)	Stroke (mm)	
Auto pressure adjustment	BBS-A	ø50/ø63 ..... ø80/ø100	100/200/300/400/500/600/700/800/900/1000/1100/1200/1300/1400/1500	
Fixed pressure adjustment control box separate	BBS-O	ø50/ø63 ..... ø80/ø100	100/200/300/400/500/600/700/800/900/1000/1100/1200/1300/1400/1500	
Fixed pressure adjustment control box integrated	BBS-OB	ø50/ø63 ..... ø80/ø100	100/200/300/400/500/600/700/800/900/1000/1100/1200/1300/1400/1500	

LCM
LCR
LCG
LCW
LCX
STM
STG
STS/STL
STR2
UCA2
ULK*
JSK/M2
JSG
JSC3/JSC4
USSD
UFCD
USC
UB
JSB3
LMB
LML
HCM
HCA
LBC
CAC4
UCAC2
CAC-N
UCAC-N
RCS2
RCC2
PCC
SHC
MCP
GLC
MFC
BBS
RRC
GRC
RV3*
NHS
HRL
LN
Hand
Chuk
MecHnd/Chuk
ShkAbs
FJ
FK
SpdContr
Ending

●: Standard ◎: Option ■: Not available

	Max. stroke	Min. stroke	Mounting					Accessory		Page
			Basic	Eye bracket	Clevis bracket	Rod side flange	Head side flange	Rod eye	Rod clevis	
	(mm)	(mm)	00	CA	CB	FA	FB	I	Y	
	1500	100	●	●	■	●	●	●	●	1258
			●	■	●	●	●	●	●	
	1500	100	●	●	■	●	●	●	●	1270
			●	■	●	●	●	●	●	
	1500	300	●	●	■	●	●	●	●	1270
			●	■	●	●	●	●	●	

Balancer unit
Auto pressure adjustment

BBS-A Series

● Bore size : ø50, ø63, ø80, ø100

RoHS

Specifications

Item \ Model No.	BBS-A-50	BBS-A-63	BBS-A-80	BBS-A-100
Working fluid	Clean compressed air			
Max. working pressure MPa	0.60 (≈87 psi, 6 bar)			
Min. working pressure MPa	0.25 (≈36 psi, 2.5 bar)			
Proof pressure MPa	0.90 (≈130 psi, 9 bar)			
Ambient temperature °C	-5 (23°F) to 50 (122°F) (no freezing)			
Bore size mm	ø50	ø63	ø80	ø100
Max. stroke mm	1500			
Working piston speed mm/s	1 to 200			
Cushion	Rubber cushion			
Lubrication	Not available			
Minimum load range kg	10	16	25	40
Maximum load range *1 kg	70	115	180	285
Operating force N	Refer to page 1269 BBS working force documentation			
Holding force N	1539		3940	

*1 : Refer to page 1269 for details about the maximum load range versus BBS working pressure.

Stroke

Standard stroke (mm)	Max. stroke (mm)	Min. stroke (mm)
100, 200, 300, 400, 500, 600, 700, 800, 900, 1000, 1100, 1200, 1300, 1400, 1500	1500	100

Note : The custom stroke is available in 1 mm increments.

Weight table

(Unit: kg)

Bore size (mm)	Product weight at 0 mm stroke					Additional weight per 100 mm stroke
	Basic (00)	Eye bracket (CA)	Clevis bracket (CB)	Flange FA	Flange FB	
ø50	7.22	7.62	—	8.35	7.56	0.44
ø63	7.52	8.20	—	8.65	8.02	0.52
ø80	10.96	—	11.67	12.88	11.67	0.70
ø100	12.09	—	13.37	14.01	13.44	0.86

How to order

BBS-A - A D 1 - CB - 80 D - 300 - Y

- BBS-A: Automatic pressure adjustment balancer unit
- A: Type
- B: Load direction *1
- C: Cylinder orientation (Piston rod direction) *1
- D: Mounting *2
- E: Bore size
- F: Stroke
- G: Accessory *3

Code	Description
A Type	
Blank	Electric (24 VDC)
A	Pneumatic *4
B Load direction	
D	Push type
U	Pull type
C Cylinder orientation (piston rod direction)	
Blank	Downward
1	Upward
2	Horizontal
D Mounting	
OO	Basic
CA	Eye bracket (ø50, ø63) (pin and snap ring attached)
CB	Clevis bracket (ø80, ø100) (pin and snap ring attached)
FA	Rod side flange
FB	Head side flange
E Bore size (mm)	
50	ø50
63	ø63
80	ø80
100	ø100
F Stroke (mm)	
100, 200, 300, 400, 500, 600, 700, 800, 900, 1000, 1100, 1200, 1300, 1400, 1500	
G Accessory	
I	Rod eye
Y	Rod clevis (pin and snap ring attached)

⚠ Precautions for model No. selection

*1 : The load direction refers to the input direction of the load to the cylinder.
The cylinder orientation is when installed. Refer to the figure below.
*2 : Mounting bracket will be shipped with the product.
*3 : "I" and "Y" cannot be selected together.
*4 : When the automatic pressure adjustment is selected for the air method, be sure to use the control box (BBS-A-TB Page 1267).

C Cylinder orientation

Load direction push (D)

D (Piston rod downward)	D1 (Piston rod upward)	D2 (Piston rod horizontal)
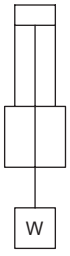 Cylinder orientation: piston rod downward; W; Load direction: push	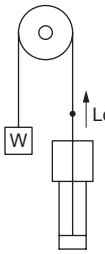 W; Load direction : push; Cylinder orientation : piston rod upward	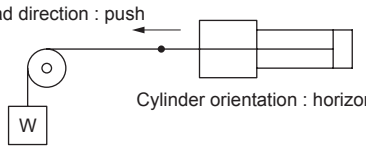 Load direction : push; W; Cylinder orientation : horizontal

Load direction pull (U)

U (Piston rod downward)	U1 (Piston rod upward)	U2 (Piston rod horizontal)
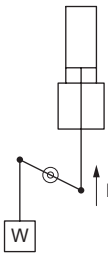 Cylinder orientation : piston rod downward; Load direction : pull; W	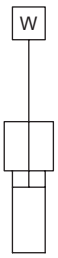 W; Load direction : pull; Cylinder orientation : piston rod upward	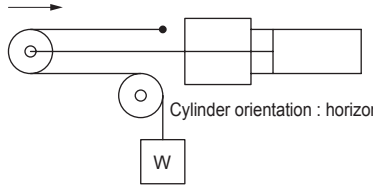 Load direction : pull; Cylinder orientation : horizontal; W

How to order mounting bracket

Bore size (mm) / Mounting bracket	ø50	ø63	ø80	ø100
Flange (FA)	BBS-FA-50	BBS-FA-50	BBS-FA-80	BBS-FA-80
Flange (FB)	SCM-FA-50	SCM-FA-63	SCM-FA-80	SCM-FA-100
Eye bracket (CA)	SCM-CA-50	SCM-CA-63	-	-
Clevis bracket (CB)	-	-	SCM-CB-80	SCM-CB-100

Note : All mounting brackets have mounting bolts attached.

LCM
LCR
LCG
LCW
LCX
STM
STG
STS/STL
STR2
UCA2
ULK*
JSK/M2
JSG
JSC3/JSC4
USSD
UFCD
USC
UB
JSB3
LMB
LML
HCM
HCA
LBC
CAC4
UCAC2
CAC-N
UCAC-N
RCS2
RCC2
PCC
SHC
MCP
GLC
MFC
BBS
RRC
GRC
RV3*
NHS
HRL
LN
Hand
Chuk
MecHnd/Chuk
ShkAbs
FJ
FK
SpdContr
Ending

Dimensions

● Basic (00) Load direction push (D)

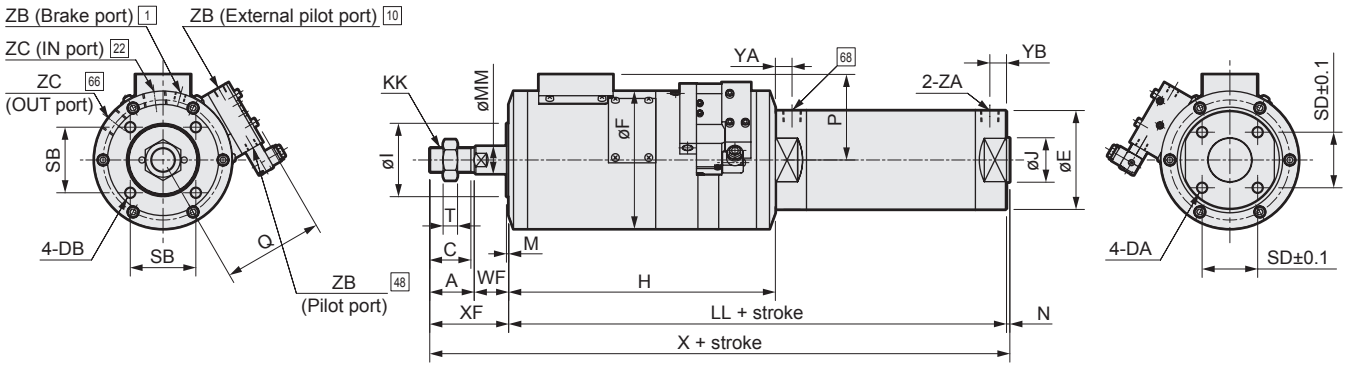

● Basic (00) Load direction pull (U)

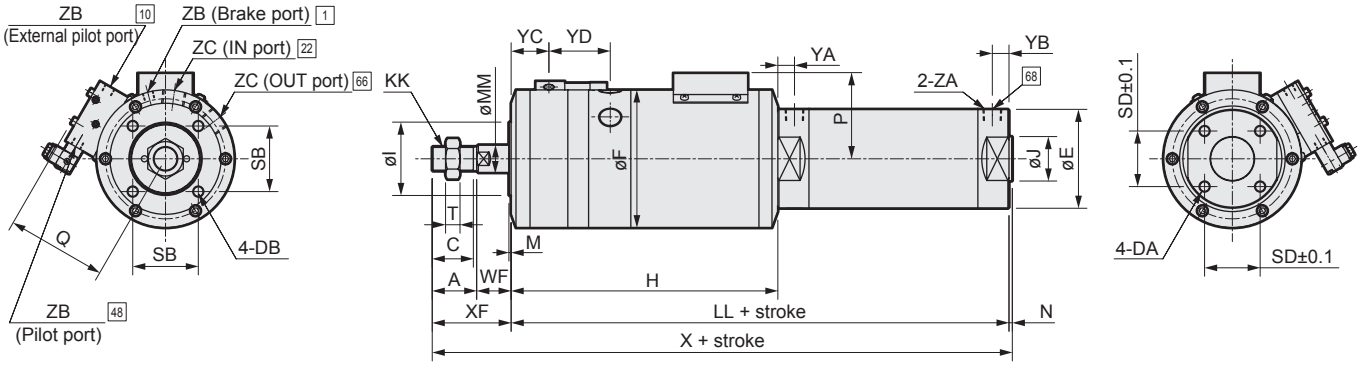

Note : □ contains the piping connection number of the air circuit diagram.

Code / Bore size (mm)	A	C	DA	DB	E	F	H	I	J	KK	LL	MM
ø50	35	32	M8 x 1.25 depth 16	M8 x 1.25 depth 15	58	110	224	60	30	M18x1.5	314	20
ø63	35	32	M10 x 1.5 depth 16	M8 x 1.25 depth 15	72	110	224	60	32	M18x1.5	314	20
ø80	40	37	M10 x 1.5 depth 22	M10 x 1.5 depth 15	89	124	240	66	40	M22x1.5	348	25
ø100	40	37	M12 x 1.5 depth 22	M10 x 1.5 depth 15	110	124	240	66	50	M22x1.5	348	25

Code / Bore size (mm)	M	N	P	Q	SB	SD	T	WF	X	XF	YA	YB	YC	YD	ZA	ZB	ZC
ø50	2	2	57	81	50	32	11	23	374	58	15	12	32	52	Rc1/4	Rc1/8	Rc3/8
ø63	2	2	57	81	50	38	11	23	374	58	15	12	32	52	Rc1/4	Rc1/8	Rc3/8
ø80	2	3	77	90	59	50	13	31	422	71	15	15	34	55.7	Rc3/8	Rc1/8	Rc1/2
ø100	2	3	77	90	59	60	13	31	422	71	15	15	34	55.7	Rc1/2	Rc1/8	Rc1/2

Dimensions

● Eye bracket (CA) Load direction push (D)

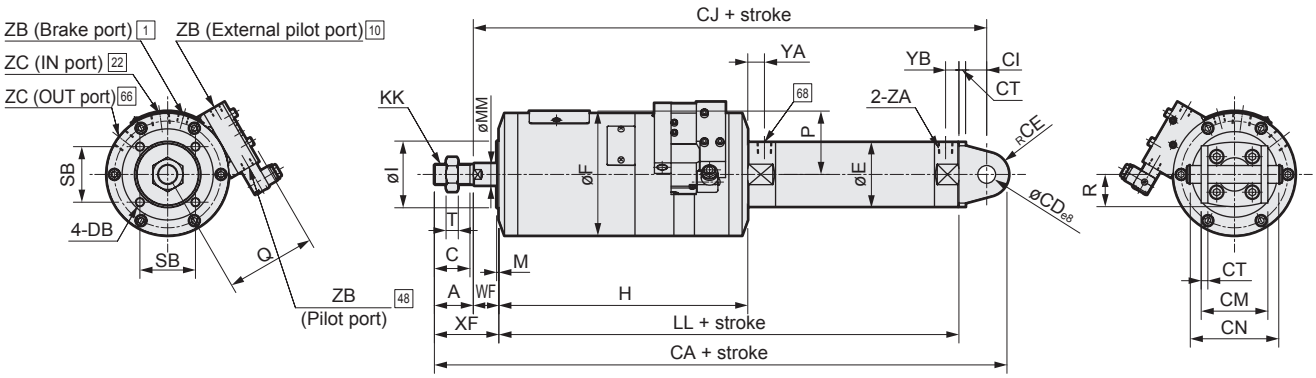

● Eye bracket (CA) Load direction pull (U)

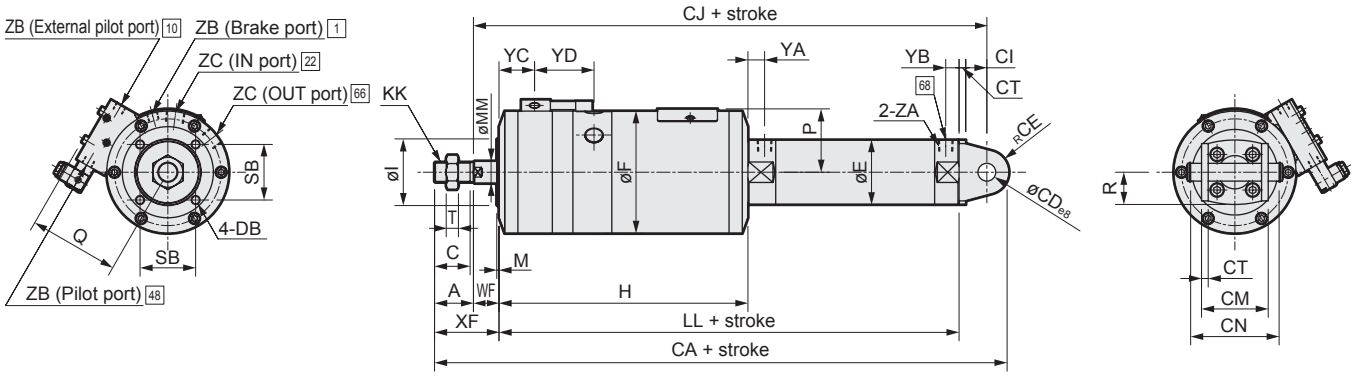

Note : □ contains the piping connection number of the air circuit diagram.

Code / Bore size (mm)	A	C	DB	E	F	H	I	KK	LL	MM	M	P	Q	R	SB	T
ø50	35	32	M8 x 1.25 depth 15	58	110	224	60	M18x1.5	314	20	2	57	81	29	50	11
ø63	35	32	M8 x 1.25 depth 15	72	110	224	60	M18x1.5	314	20	2	57	81	36	50	11

Code / Bore size (mm)	WF	XF	CA	CD	CE	CI	CT	CJ	CM	CN	YA	YB	YC	YD	ZA	ZB	ZC
ø50	23	58	417	16	20	19	6	362	60	79.6	15	12	32	52	Rc1/4	Rc1/8	Rc3/8
ø63	23	58	424	18	22	22	8	367	74	97.8	15	12	32	52	Rc1/4	Rc1/8	Rc3/8

LCM
LCR
LCG
LCW
LCX
STM
STG
STS/STL
STR2
UCA2
ULK*
JSK/M2
JSG
JSC3/JSC4
USSD
UFCD
USC
UB
JSB3
LMB
LML
HCM
HCA
LBC
CAC4
UCAC2
CAC-N
UCAC-N
RCS2
RCC2
PCC
SHC
MCP
GLC
MFC
BBS
RRC
GRC
RV3*
NHS
HRL
LN
Hand
Chuk
MecHnd/Chuk
ShkAbs
FJ
FK
SpdContr
Ending

Dimensions

● Clevis bracket (CB) Load direction push (D)

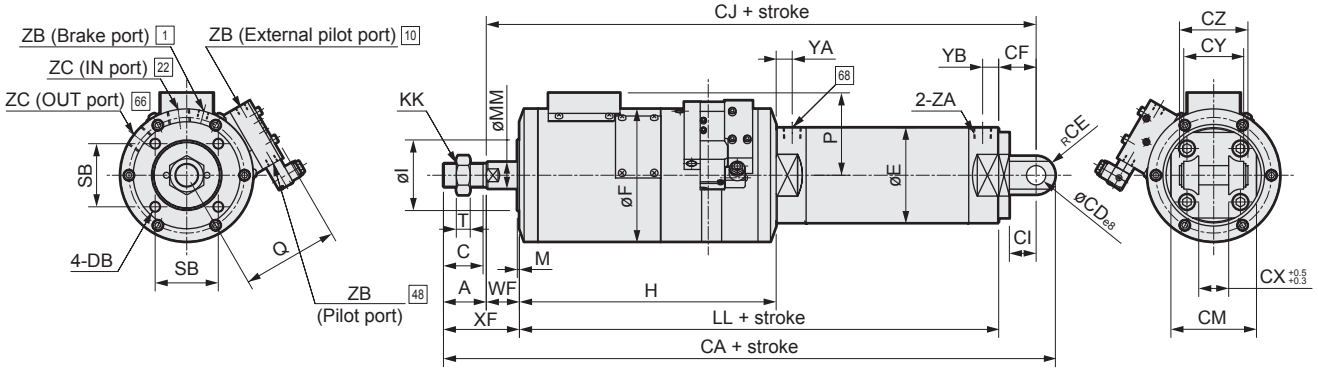

● Clevis bracket (CB) Load direction pull : (U)

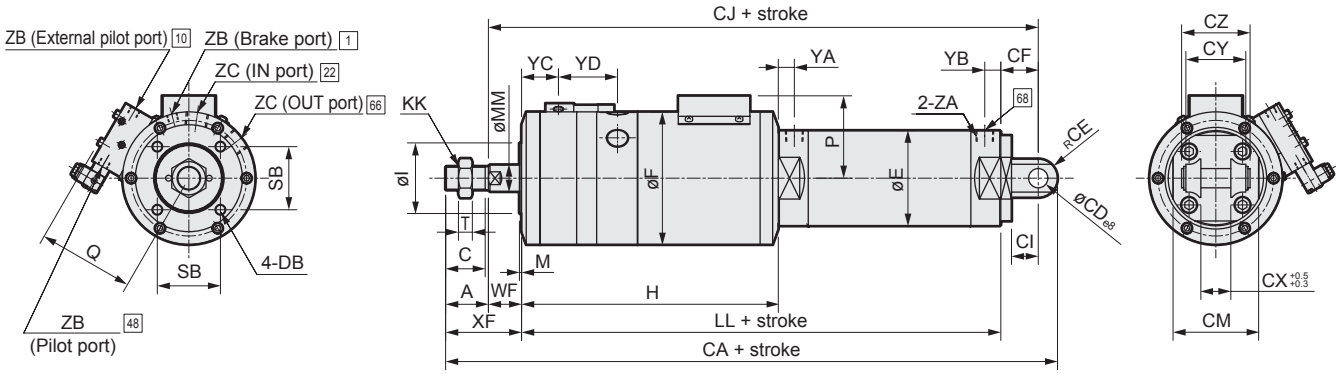

Note : □ contains the piping connection number of the air circuit diagram.

Code / Bore size (mm)	A	C	DB	E	F	H	I	KK	LL	MM	M	P	Q	SB	T
ø80	40	37	M10 x 1.5 depth 15	89	124	240	66	M22x1.5	348	25	2	77	90	59	13
ø100	40	37	M10 x 1.5 depth 15	110	124	240	66	M22x1.5	348	25	2	77	90	59	13

Code / Bore size (mm)	WF	XF	CA	CD	CE	CF	CI	CJ	CM	CX	CY	CZ	YA	YB	YC	YD	ZA	ZB	ZC
ø80	31	71	472	18	18	35	25	414	80	28	56	64	15	15	34	55.7	Rc3/8	Rc1/8	Rc1/2
ø100	31	71	484	22	22	43	31	422	100	32	64	72	15	15	34	55.7	Rc1/2	Rc1/8	Rc1/2

Dimensions

● Rod side flange (FA) Load direction push (D)

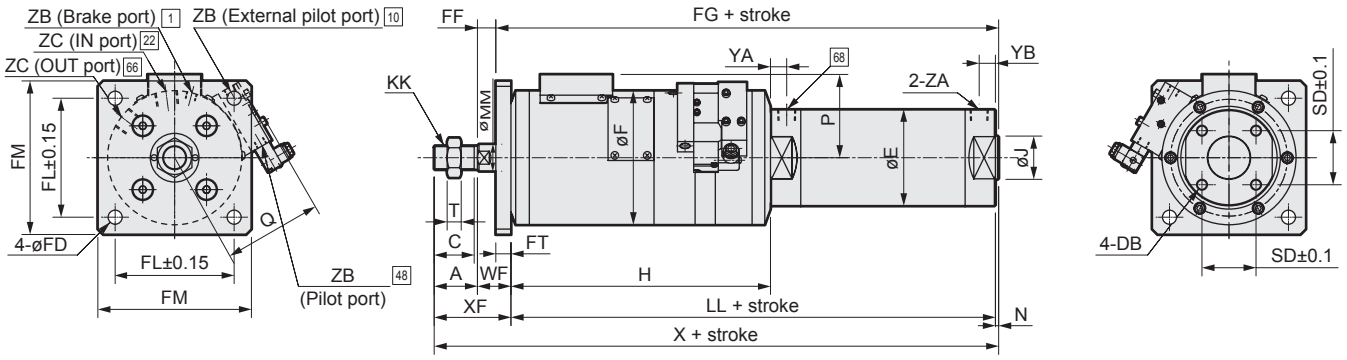

● Rod side flange (FA) Load direction pull : (U)

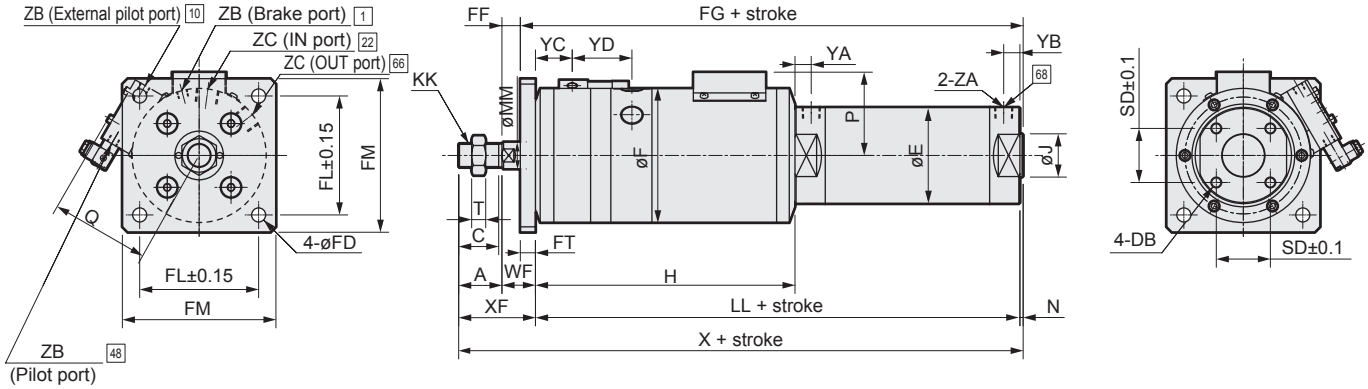

Note : □ contains the piping connection number of the air circuit diagram.

Code / Bore size (mm)	A	C	DB	E	F	H	J	KK	LL	MM	N	P	Q	SD
ø50	35	32	M8 x 1.25 depth 16	58	110	224	30	M18x1.5	314	20	2	57	81	32
ø63	35	32	M10 x 1.5 depth 16	72	110	224	32	M18x1.5	314	20	2	57	81	38
ø80	40	37	M10 x 1.5 depth 22	89	124	240	40	M22x1.5	348	25	3	77	90	50
ø100	40	37	M12x1.75 depth 22	110	124	240	50	M22x1.5	348	25	3	77	90	60

Code / Bore size (mm)	T	WF	X	XF	FD	FF	FG	FL	FM	FT	YA	YB	YC	YD	ZA	ZB	ZC
ø50	11	23	374	58	11	11	328	95	120	12	15	12	32	52	Rc1/4	Rc1/8	Rc3/8
ø63	11	23	374	58	11	11	328	95	120	12	15	12	32	52	Rc1/4	Rc1/8	Rc3/8
ø80	13	31	422	71	13	17	365	110	142	14	15	15	34	55.7	Rc3/8	Rc1/8	Rc1/2
ø100	13	31	422	71	13	17	365	110	142	14	15	15	34	55.7	Rc1/2	Rc1/8	Rc1/2

LCM
LCR
LCG
LCW
LCX
STM
STG
STS/STL
STR2
UCA2
ULK*
JSK/M2
JSG
JSC3/JSC4
USSD
UFCD
USC
UB
JSB3
LMB
LML
HCM
HCA
LBC
CAC4
UCAC2
CAC-N
UCAC-N
RCS2
RCC2
PCC
SHC
MCP
GLC
MFC
BBS
RRC
GRC
RV3*
NHS
HRL
LN
Hand
Chuk
MecHnd/Chuk
ShkAbs
FJ
FK
SpdContr
Ending

Dimensions

● Head side flange (FB) Load direction push (D)

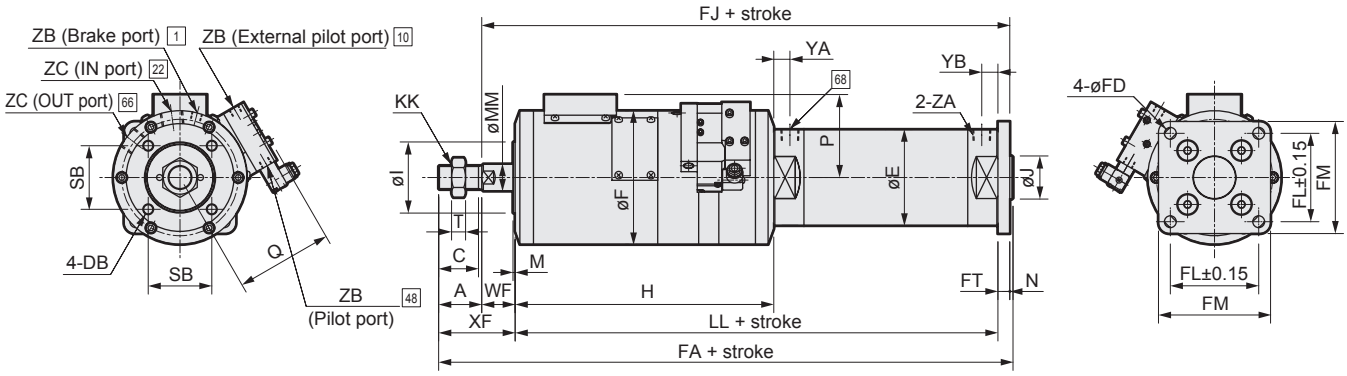

● Head side flange (FB) Load direction pull : (U)

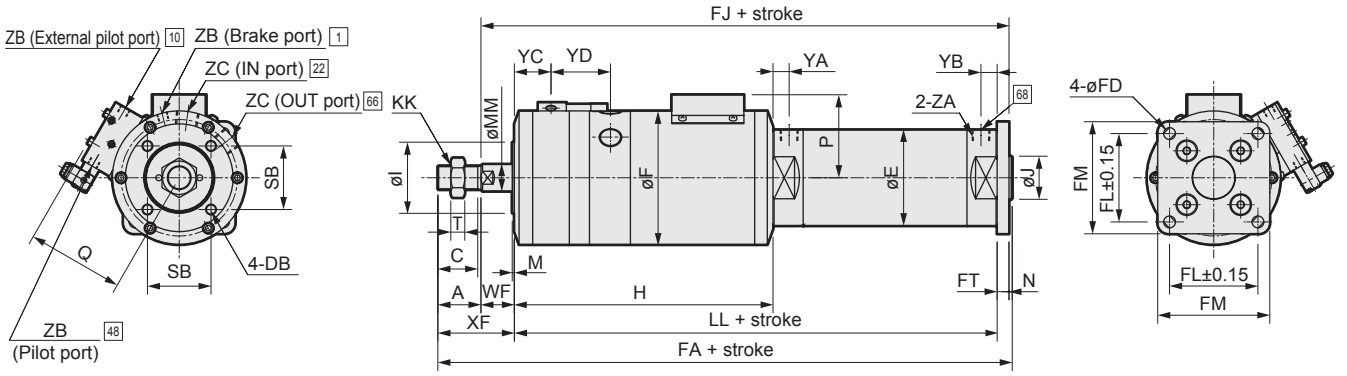

Note : □ contains the piping connection number of the air circuit diagram.

Code / Bore size (mm)	A	C	DB	E	F	H	I	J	KK	LL	MM	M	N	P	Q
ø50	35	32	M8 x 1.25 depth 15	58	110	224	60	30	M18x1.5	314	20	2	2	57	81
ø63	35	32	M8 x 1.25 depth 15	72	110	224	60	32	M18x1.5	314	20	2	2	57	81
ø80	40	37	M10 x 1.5 depth 15	89	124	240	66	40	M22x1.5	348	25	2	3	77	90
ø100	40	37	M10 x 1.5 depth 15	110	124	240	66	50	M22x1.5	348	25	2	3	77	90

Code / Bore size (mm)	SB	T	WF	XF	FA	FD	FJ	FL	FM	FT	YA	YB	YC	YD	ZA	ZB	ZC
ø50	50	11	23	58	383	9	346	58	76	9	15	12	32	52	Rc1/4	Rc1/8	Rc3/8
ø63	50	11	23	58	383	11	346	70	92	9	15	12	32	52	Rc1/4	Rc1/8	Rc3/8
ø80	59	13	31	71	433	11	390	82	104	11	15	15	34	55.7	Rc3/8	Rc1/8	Rc1/2
ø100	59	13	31	71	436	13	393	100	128	14	15	15	34	55.7	Rc1/2	Rc1/8	Rc1/2

LCM
LCR
LCG
LCW
LCX
STM
STG
STS/STL
STR2
UCA2
ULK*
JSK/M2
JSG
JSC3/JSC4
USSD
UFCD
USC
UB
JSB3
LMB
LML
HCM
HCA
LBC
CAC4
UCAC2
CAC-N
UCAC-N
RCS2
RCC2
PCC
SHC
MCP
GLC
MFC
BBS
RRC
GRC
RV3*
NHS
HRL
LN
Hand
Chuk
MecHnd/Chuk
ShkAbs
FJ
FK
SpdContr
Ending

Control box (for electric)

How to order

BBS-A - **ETB**

Auto pressure adjustment balancer unit

Control box

Custom-made circuits are available to suit customer usage criteria. Contact CKD for details.

Dimensions

● Control box (BBS-A-ETB)

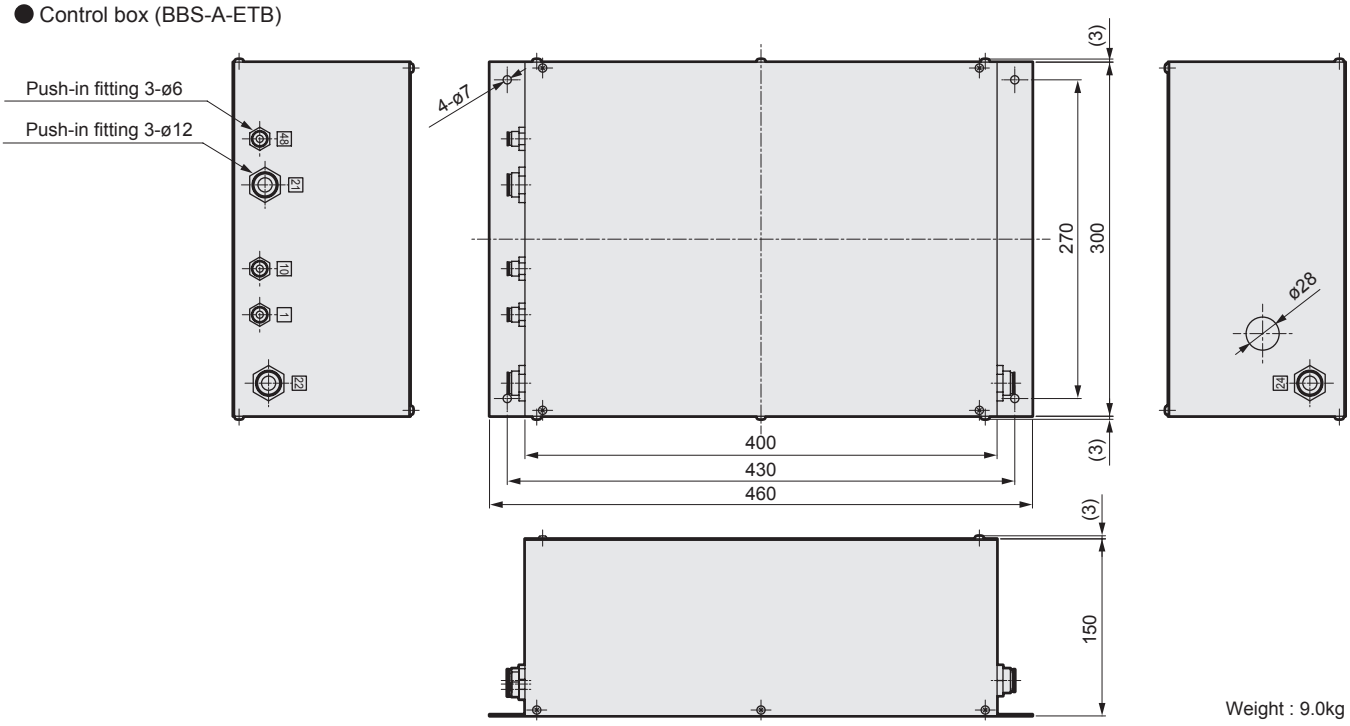

Weight : 9.0kg

Air circuit diagram

● Control box
(BBS-A-ETB) Air circuit diagram

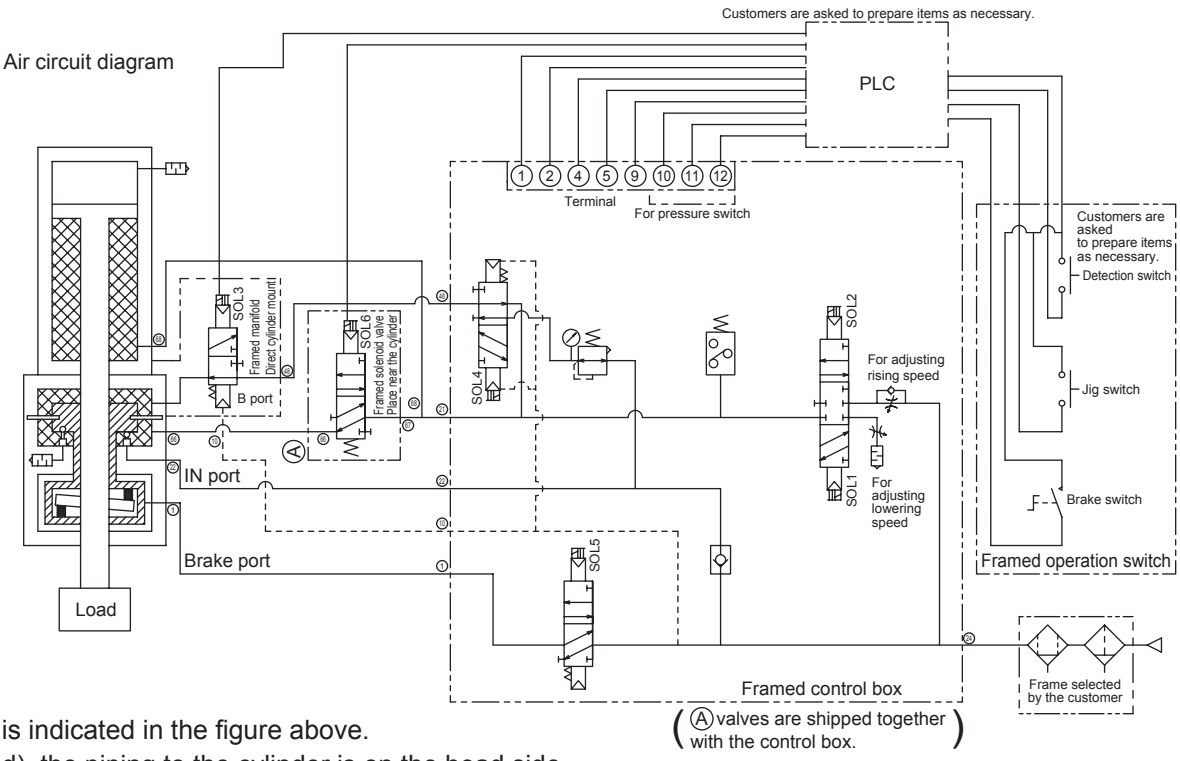

D (push load) is indicated in the figure above.
For U (pull load), the piping to the cylinder is on the head side.

LCM
LCR
LCG
LCW
LCX
STM
STG
STS/STL
STR2
UCA2
ULK*
JSK/M2
JSG
JSC3/JSC4
USSD
UFCD
USC
UB
JSB3
LMB
LML
HCM
HCA
LBC
CAC4
UCAC2
CAC-N
UCAC-N
RCS2
RCC2
PCC
SHC
MCP
GLC
MFC
BBS
RRC
GRC
RV3*
NHS
HRL
LN
Hand
Chuk
MecHnd/Chuk
ShkAbs
FJ
FK
SpdContr
Ending

Control box (for electric, 2-stage speed switchable)

How to order

BBS-A - ETB2

- BBS-A: Auto pressure adjustment balancer unit
- ETB2: Control box

Custom-made circuits are available to suit customer usage criteria. Contact CKD for details.

Dimensions

● Same as control box (BBS-A-ETB). Refer to page 1265.

Weight: 9.5kg

Air circuit diagram

● Control box (BBS-A-ETB2) air circuit diagram

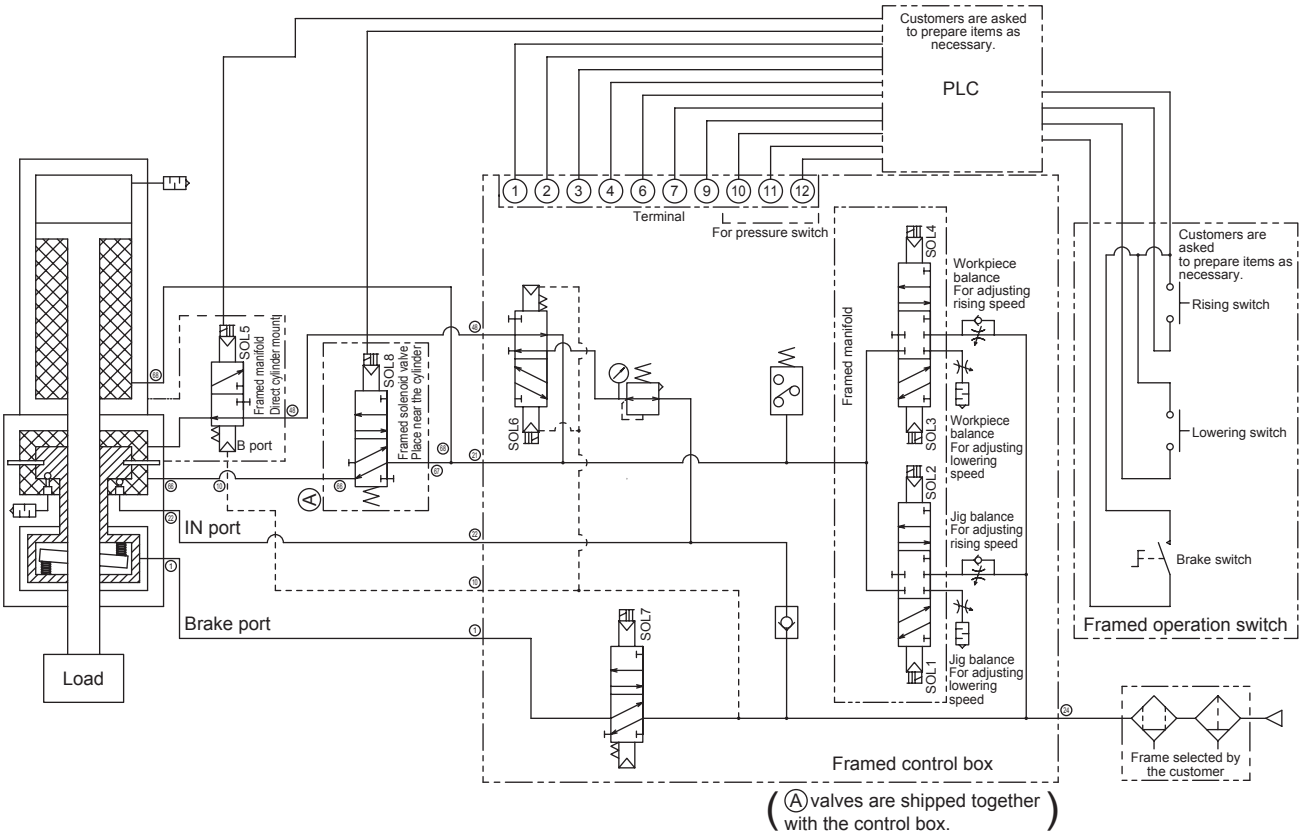

D (push load) is indicated in the figure above.
For U (pull load), the piping to the cylinder is on the head side.

LCM
LCR
LCG
LCW
LCX
STM
STG
STS/STL
STR2
UCA2
ULK*
JSK/M2
JSG
JSC3/JSC4
USSD
UFCD
USC
UB
JSB3
LMB
LML
HCM
HCA
LBC
CAC4
UCAC2
CAC-N
UCAC-N
RCS2
RCC2
PCC
SHC
MCP
GLC
MFC
BBS
RRC
GRC
RV3*
NHS
HRL
LN
Hand
Chuk
MecHnd/Chuk
ShkAbs
FJ
FK
SpdContr
Ending

Control box (for pneumatic)

How to order

BBS-A - TB

Automatic pressure adjustment balancer unit

Control box

Custom-made circuits are available to suit customer usage criteria. Contact CKD for details.

Dimensions

● Control box (BBS-A-TB)

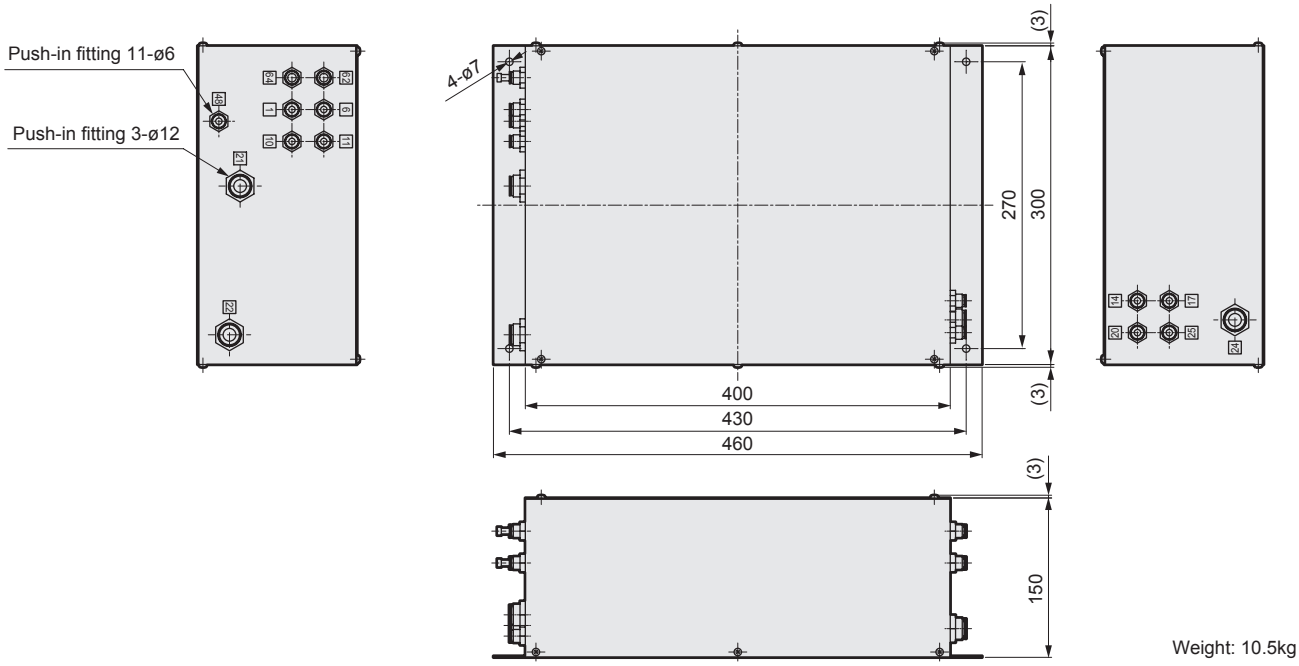

Weight: 10.5kg

Air circuit diagram

● Control box (BBS-A-TB) air circuit diagram

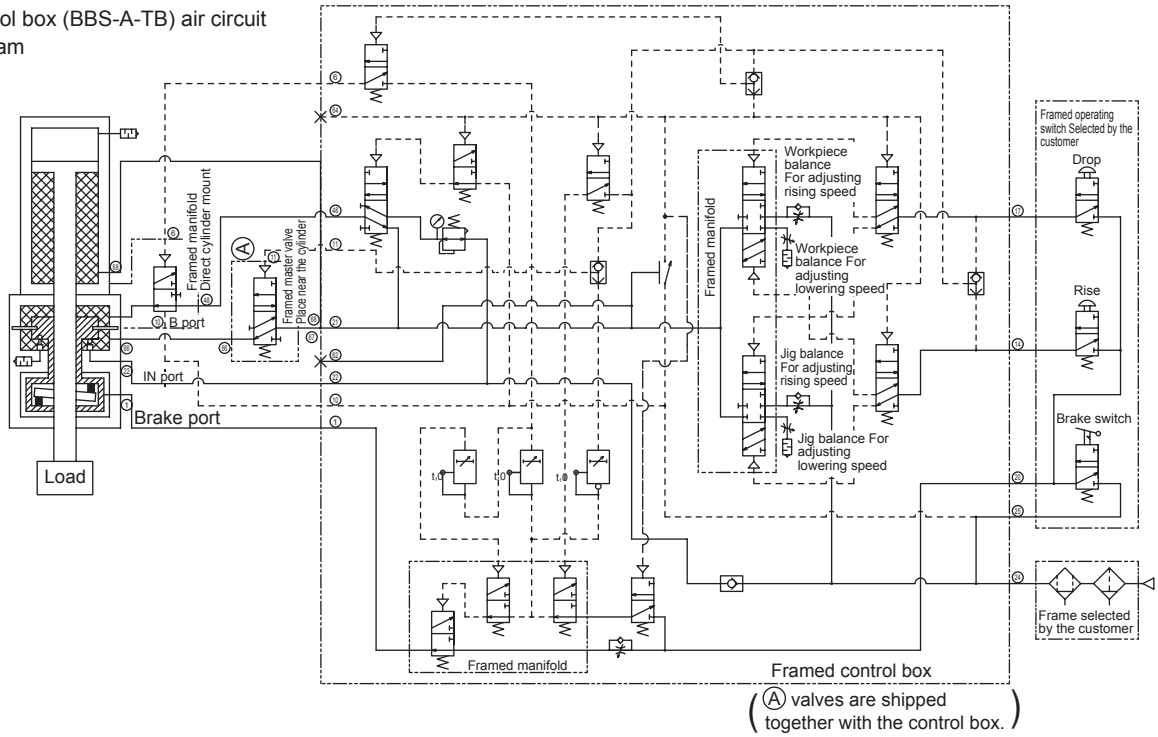

D (push load) is indicated in the figure above.
For U (pull load), the piping to the cylinder is on the head side.

LCM
LCR
LCG
LCW
LCX
STM
STG
STS/STL
STR2
UCA2
ULK*
JSK/M2
JSG
JSC3/JSC4
USSD
UFCD
USC
UB
JSB3
LMB
LML
HCM
HCA
LBC
CAC4
UCAC2
CAC-N
UCAC-N
RCS2
RCC2
PCC
SHC
MCP
GLC
MFC
BBS
RRC
GRC
RV3*
NHS
HRL
LN
Hand
Chuk
MecHnd/Chuk
ShkAbs
FJ
FK
SpdContr
Ending

Operation switch (for pneumatic type)

How to order

BBS - **CSW** - **R**

Balancer Unit — Operation switch

Code	Description
Ⓐ Type	
P	Push type
H	Hand
R	Lever
G	Grip

Operation switch outline drawing

● Push type (BBS-CSW-P)

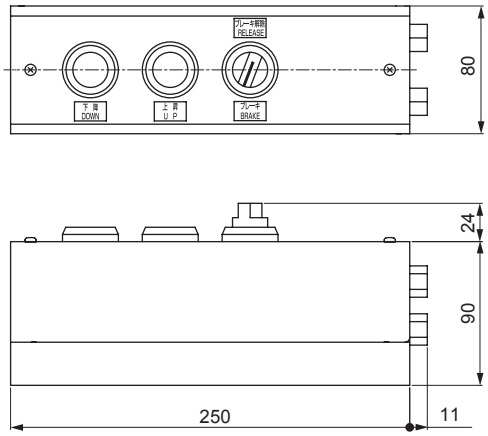

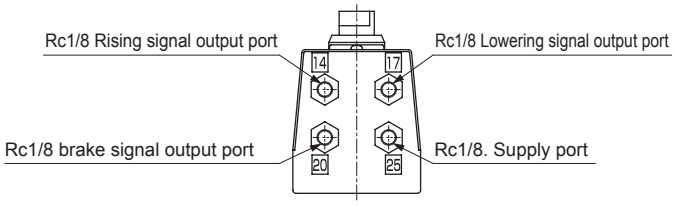

Weight: 1.4kg

● Hand (BBS-CSW-H)

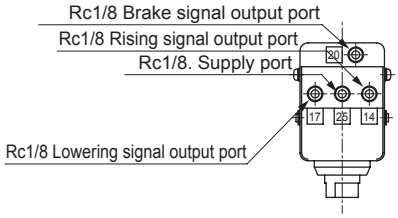

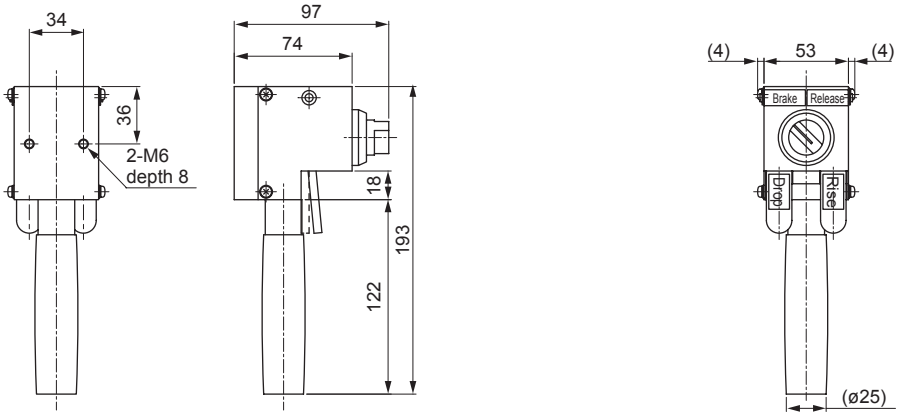

Weight: 1.0kg

Operation switch outline drawing

● Lever (BBS-CSW-R)

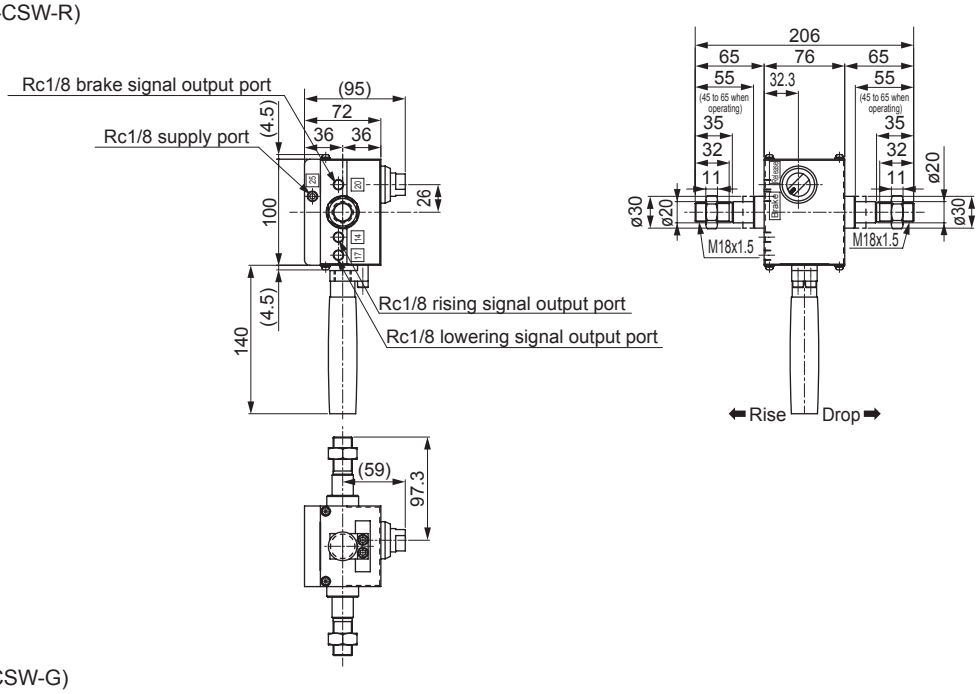

Weight : 2.0kg

● Grip (BBS-CSW-G)

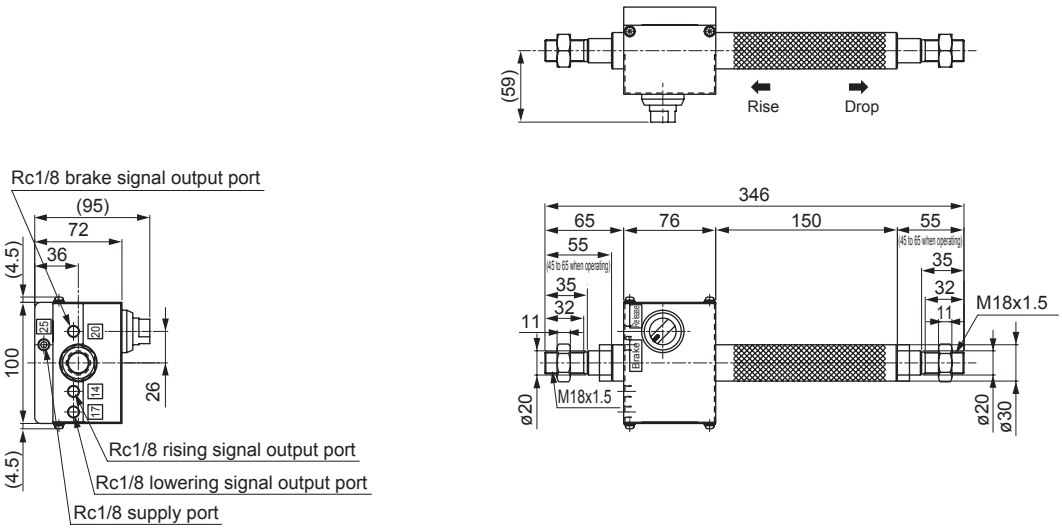

Weight : 2.5kg

Assemble the lever and grip operation switch to the piston rod before use.
Adapters for assembly are also available. Contact CKD.

Operating force

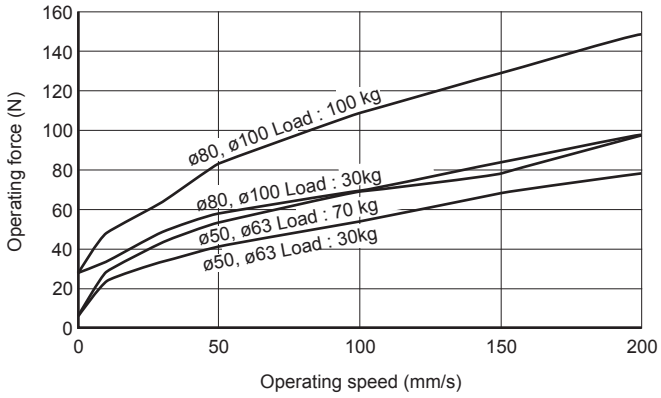

Maximum load range versus working pressure

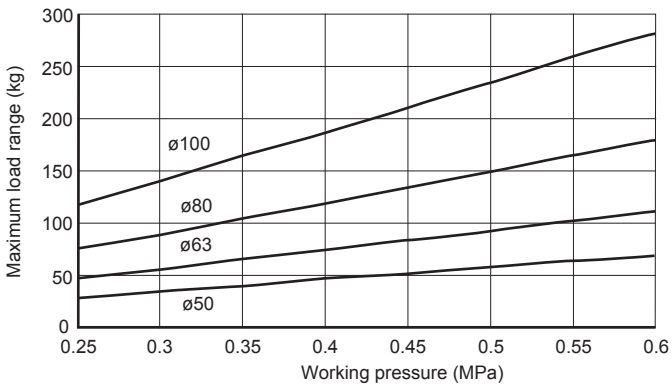

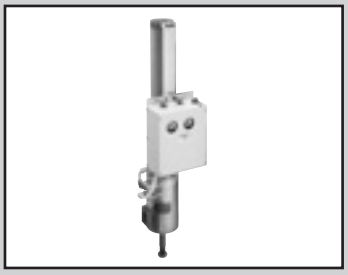

Balancer unit
Fixed pressure adjustment
Control box separate

Control box integrated

BBS-O Series BBS-OB Series

● Bore size : ø50, ø63, ø80, ø100

RoHS

Specifications

Item \ Model No.	BBS-O-50	BBS-O-63	BBS-O-80	BBS-O-100
Working fluid	Clean compressed air			
Max. working pressure MPa	0.60 (≈87 psi, 6 bar)			
Min. working pressure MPa	0.25 (≈36 psi, 2.5 bar)			
Proof pressure MPa	0.90 (≈130 psi, 9 bar)			
Ambient temperature °C	-5 (23°F) to 50 (122°F) (no freezing)			
Bore size mm	ø50	ø63	ø80	ø100
Max. stroke mm	1500			
Working piston speed mm/s	1 to 200			
Cushion	Rubber cushion			
Lubrication	Not available			
Minimum load range kg	10	16	25	40
Maximum load range *1 kg	70	115	180	285
Operating force N	Refor to page 1269 BBS working force documentation			
Holding force N	1539		3940	

*1 : Refer to page 1269 for details about the maximum load range versus BBS working pressure.

Stroke

Model	Standard stroke (mm)	Max. stroke (mm)	Min. stroke (mm)
BBS-O	100, 200, 300, 400, 500, 600, 700, 800, 900, 1000, 1100, 1200, 1300, 1400, 1500	1500	100
BBS-OB	300, 400, 500, 600, 700, 800, 900, 1000, 1100, 1200, 1300, 1400, 1500	1500	300

Note : The custom stroke is available in 1 mm increments.

Weight table

● Control box separate BBS-O (Unit : kg)

Bore size (mm)	Product weight at 0 mm stroke					Additional weight per 100 mm stroke
	Basic (00)	Eye bracket (CA)	Clevis bracket (CB)	Flange FA	Flange FB	
ø50	7.22	7.62	—	8.35	7.56	0.44
ø63	7.52	8.20	—	8.65	8.02	0.52
ø80	10.96	—	11.67	12.88	11.67	0.70
ø100	12.09	—	13.37	14.01	13.44	0.86

● Control box integrated BBS-OB (Unit : kg)

Bore size (mm)	Product weight at 0 mm stroke					Additional weight per 100 mm stroke
	Basic (00)	Eye bracket (CA)	Clevis bracket (CB)	Flange FA	Flange FB	
ø50	11.14	11.54	—	12.27	11.48	0.58
ø63	11.44	12.12	—	12.57	11.94	0.66
ø80	14.78	—	15.49	16.70	15.49	0.84
ø100	15.91	—	17.19	17.83	17.26	1.00

How to order

BBS-O - D - CB - 80 D - 300 - Y

- Ⓐ Model No.
- Ⓑ Load direction *1
- Ⓒ Mounting *2
- Ⓓ Bore size
- Ⓔ Stroke *3
- Ⓕ Accessory *4

Code	Description
Ⓐ Model No.	
BBS-O	Control box separate (*5)
BBS-OB	Control box integrated
Ⓑ Load direction	
D	Push type
U	Pull type
Ⓒ Mounting	
OO	Basic
CA	Eye bracket (ø50, ø63) (pin and snap ring attached)
CB	Clevis bracket (ø80, ø100) (pin and snap ring attached)
FA	Rod side flange
FB	Head side flange
Ⓓ Bore size (mm)	
50	ø50
63	ø63
80	ø80
100	ø100
Ⓔ Stroke (mm)	
100, 200, 300, 400, 500, 600, 700, 800, 900, 1000, 1100, 1200, 1300, 1400, 1500	
Ⓕ Accessory	
I	Rod eye
Y	Rod clevis (pin and snap ring attached)

⚠ Precautions for model No. selection

*1 : The load direction refers to the input direction of the load to the cylinder.
*2 : Mounting bracket will be shipped with the product.
*3 : The min. stroke of BBS-OB is 300 mm.
*4 : "I" and "Y" cannot be selected together.
*5 : BBS-O control boxes are attached separately. Connect them to the cylinder yourself.

How to order mounting bracket

Bore size (mm) / Mounting bracket	ø50	ø63	ø80	ø100
Flange (FA)	BBS-FA-50	BBS-FA-50	BBS-FA-80	BBS-FA-80
Flange (FB)	SCM-FA-50	SCM-FA-63	SCM-FA-80	SCM-FA-100
Eye bracket (CA)	SCM-CA-50	SCM-CA-63	—	—
Clevis bracket (CB)	—	—	SCM-CB-80	SCM-CB-100

*1 : All mounting brackets have mounting bolts attached.

LCM
LCR
LCG
LCW
LCX
STM
STG
STS/STL
STR2
UCA2
ULK*
JSK/M2
JSG
JSC3/JSC4
USSD
UFCD
USC
UB
JSB3
LMB
LML
HCM
HCA
LBC
CAC4
UCAC2
CAC-N
UCAC-N
RCS2
RCC2
PCC
SHC
MCP
GLC
MFC
BBS
RRC
GRC
RV3*
NHS
HRL
LN
Hand
Chuk
MecHnd/Chuk
ShkAbs
FJ
FK
SpdContr
Ending

Dimensions

● Control box separated, basic (00), load direction push : (D)

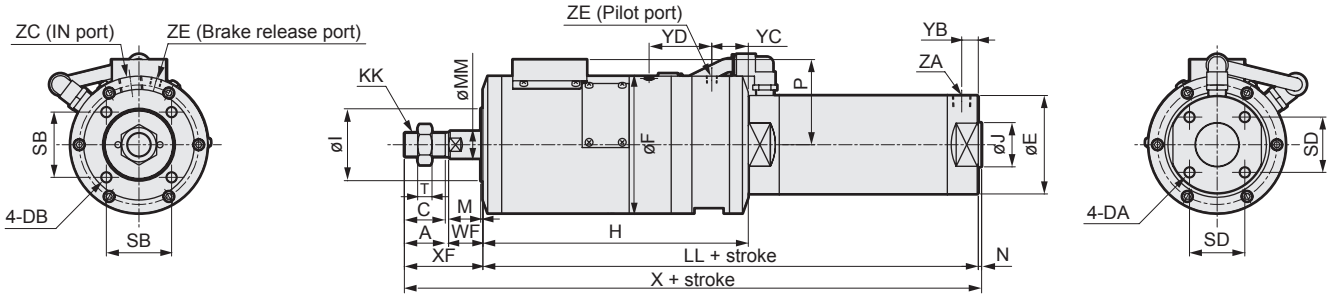

● Control box separated, basic (00), load direction pull : (U)

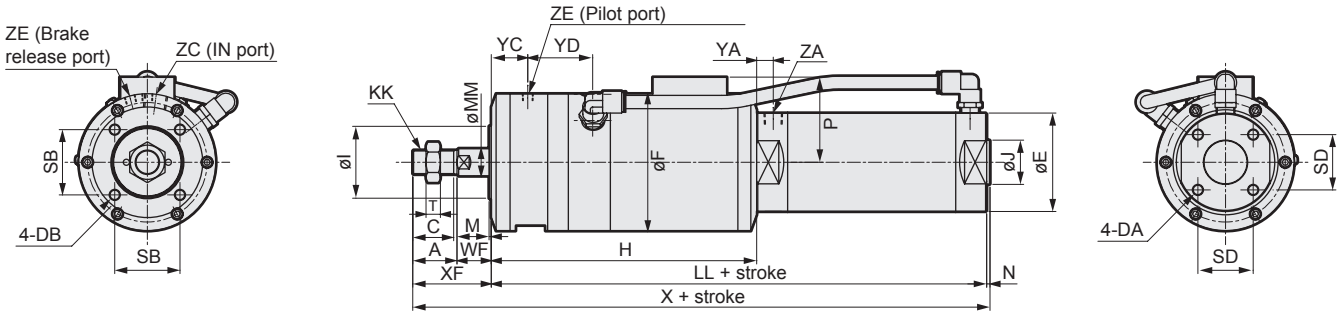

Code / Bore size (mm)	A	C	DA	DB	E	F	H	I	J	KK	LL	MM	M	N
ø50	35	32	M8 x 1.25 depth 16	M8 x 1.25 depth 15	58	110	224	60	30	M18x1.5	314	20	2	2
ø63	35	32	M10 x 1.5 depth 16	M8 x 1.25 depth 15	72	110	224	60	32	M18x1.5	314	20	2	2
ø80	40	37	M10 x 1.5 depth 22	M10 x 1.5 depth 15	89	124	240	66	40	M22x1.5	348	25	2	3
ø100	40	37	M12 x 1.5 depth 22	M10 x 1.5 depth 15	110	124	240	66	50	M22x1.5	348	25	2	3

Code / Bore size (mm)	P	SB	SD	T	WF	X	XF	YA	YB	YC	YD	ZA	ZE	ZC
ø50	57	50	32	11	23	374	58	15	12	37	48.5	Rc1/4	Rc1/8	Rc3/8
ø63	57	50	38	11	23	374	58	15	12	37	48.5	Rc1/4	Rc1/8	Rc3/8
ø80	77	59	50	13	31	422	71	15	15	33	56.7	Rc3/8	Rc1/8	Rc1/2
ø100	77	59	60	13	31	422	71	15	15	33	56.7	Rc1/2	Rc1/8	Rc1/2

● Control box (included) (weight : 3.7 kg)

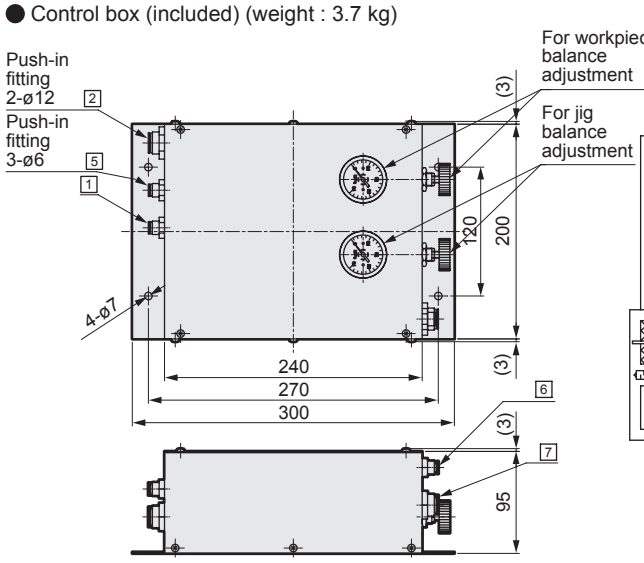

● Air circuit diagram

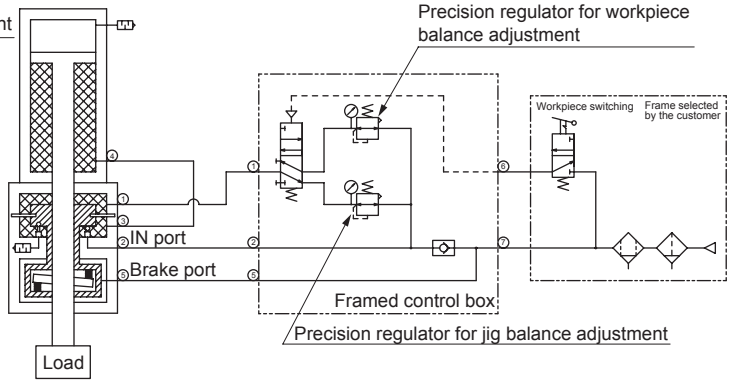

Mounting dimensions of each mounting are the same as BBS-A. Refer to pages 1261 to 1264.

Dimensions

● Control box integrated, basic (00), load direction push : (D)

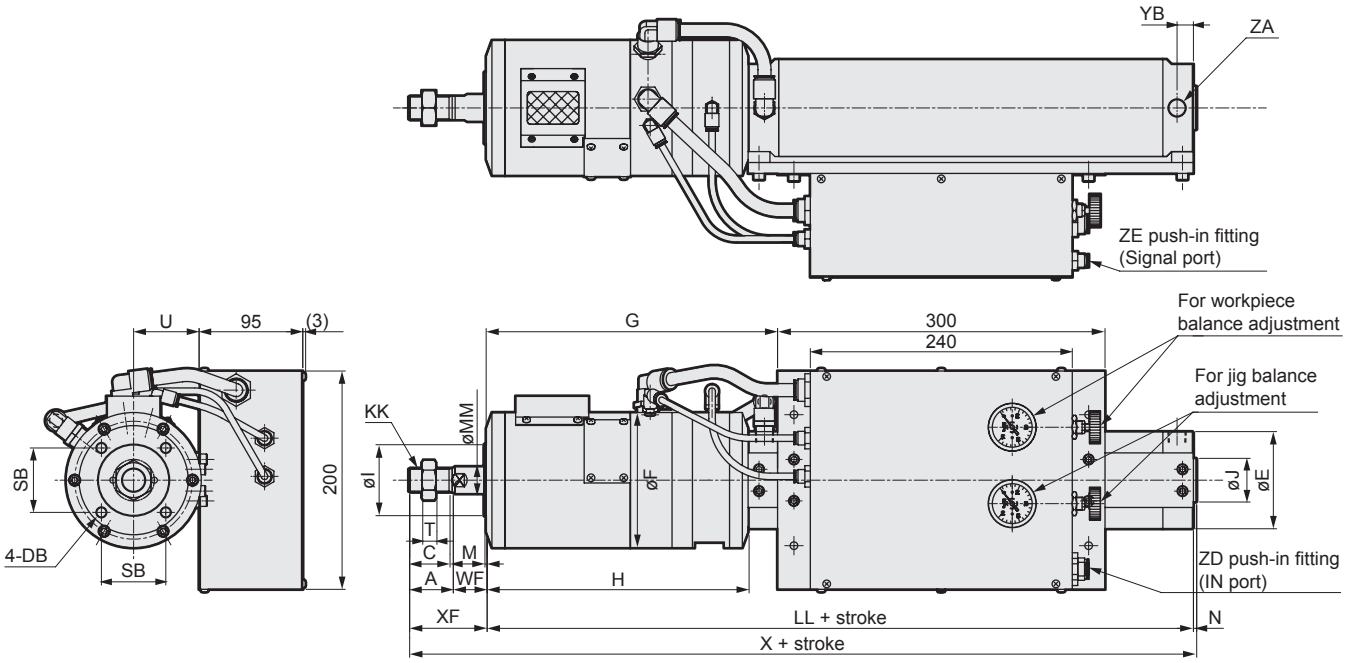

● Control box integrated, basic (00), load direction pull : (U)

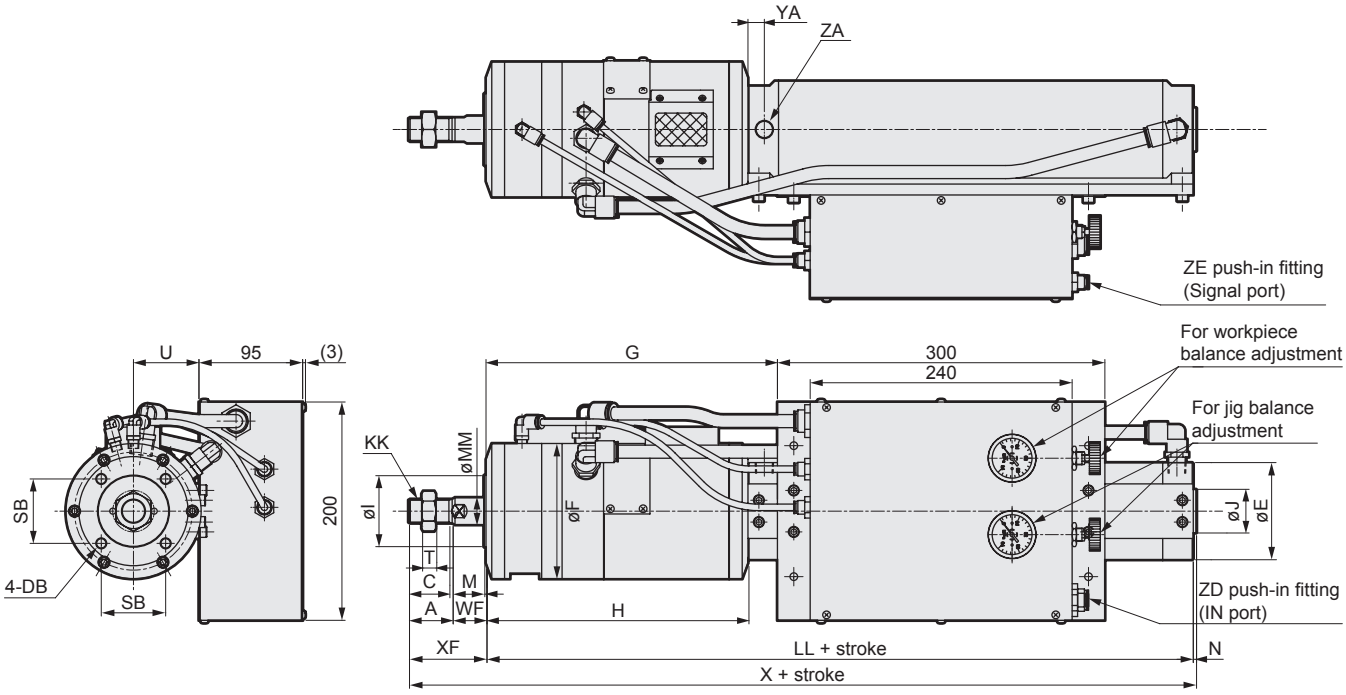

Code / Bore size (mm)	A	C	(DA)	DB	E	F	G	H	I	J	KK	LL
ø50	35	32	M8 x 1.25 depth 16	M8 x 1.25 depth 15	58	110	248	224	60	30	M18x1.5	314
ø63	35	32	M10 x 1.5 depth 16	M8 x 1.25 depth 15	72	110	248	224	60	32	M18x1.5	314
ø80	40	37	M10 x 1.5 depth 22	M10 x 1.5 depth 15	89	124	267	240	66	40	M22x1.5	348
ø100	40	37	M12 x 1.5 depth 22	M10 x 1.5 depth 15	110	124	267	240	66	50	M22x1.5	348

Code / Bore size (mm)	MM	M	N	SB	(SD)	T	U	WF	X	XF	YA	YB	ZA	ZD	ZE
ø50	20	2	2	50	32	11	47.5	23	374	58	15	12	Rc1/4	ø12	ø6
ø63	20	2	2	50	38	11	54.5	23	374	58	15	12	Rc1/4	ø12	ø6
ø80	25	2	3	59	50	13	60	31	422	71	15	15	Rc3/8	ø12	ø6
ø100	25	2	3	59	60	13	70	31	422	71	15	15	Rc1/2	ø12	ø6

Mounting dimensions of each mounting are the same as BBS-A. Refer to pages 1261 to 1264.

LCM
LCR
LCG
LCW
LCX
STM
STG
STS/STL
STR2
UCA2
ULK*
JSK/M2
JSG
JSC3/JSC4
USSD
UFCD
USC
UB
JSB3
LMB
LML
HCM
HCA
LBC
CAC4
UCAC2
CAC-N
UCAC-N
RCS2
RCC2
PCC
SHC
MCP
GLC
MFC
BBS
RRC
GRC
RV3*
NHS
HRL
LN
Hand
Chuk
MecHnd/Chuk
ShkAbs
FJ
FK
SpdContr
Ending

Accessory dimensions

● Rod eye

Material : Cast iron
Painting

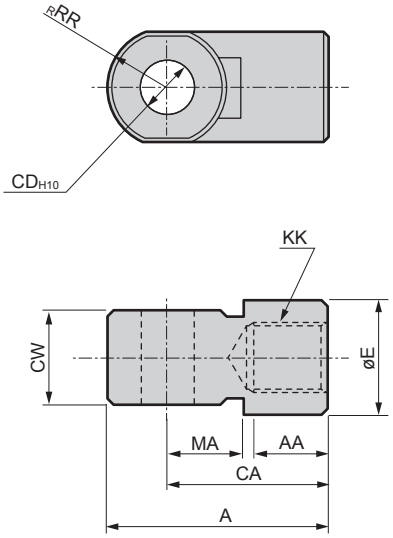

No.	Bore size (mm)	A	AA	CA	CD	CW	E	KK	MA	RR	Weight (g)
SCM-I-50	50, 63	56	18	40	14	22 $^{-0.3}_{-0.5}$	28	M18x1.5	20	16	158
SCM-I-80	80, 100	71	21	50	18	28 $^{-0.3}_{-0.5}$	38	M22x1.5	27	21	395

● Rod clevis

Material : Cast iron
Painting

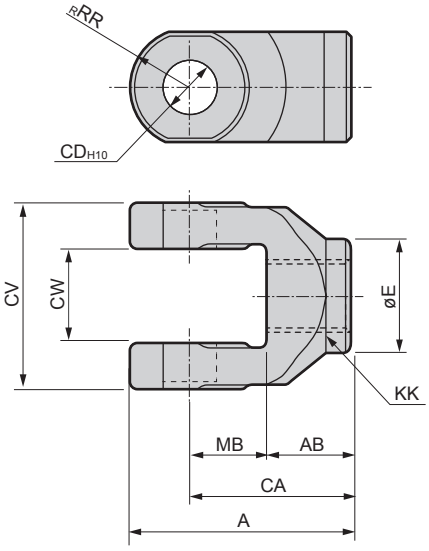

No.	Bore size (mm)	A	AB	CA	CD	CV	CW	E	KK	MB	RR	Pin No.	Weight (g)
SCM-Y-50	50, 63	56	20	40	14	44	22 $^{+0.5}_{+0.3}$	28	M18x1.5	20	16	SCM-P-50	258
SCM-Y-80	80, 100	71	23	50	18	56	28 $^{+0.5}_{+0.3}$	38	M22x1.5	27	21	SCM-P-80	590

Note : A pin and a snap ring are attached.

● Pin for clevis

Material : Steel
Zinc chromate plating treatment

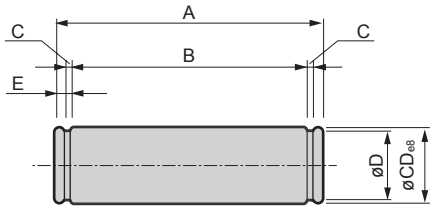

No.	Bore size (mm)	A	B	C	CD	D	E	Applicable snap ring	Weight (g)
SCM-P1-50	50	86	79.6	1.15	16	15.2	2.1	C type for shaft 16	133
SCM-P1-63	63	105.4	97.8	1.35	18	17	2.5	C type for shaft 18	207

*1 : For bore sizes ø80 and ø100, the dimension is the same as the pin for rod eye.

● Rod eye pin

Material : Steel
Zinc chromate plating treatment

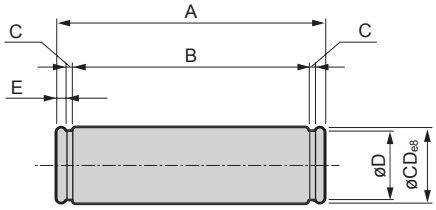

No.	Bore size (mm)	A	B	C	CD	D	E	Applicable snap ring	Weight (g)
SCM-P-50	50, 63	50.6	44.2	1.15	14	13.4	2.1	C type for shaft 14	60
SCM-P-80	80, 100	64	56.2	1.35	18	17	2.6	C type for shaft 18	126

Technical data

BBS-A Series (auto pressure adjustment) operating method

Operate acording to the following procedure.

1) Check that the brake switch is in the braking position (brake is ON).

2) Supply air.

3) Operate the brake switch to release the brake. (Jig balanced state)

4) The rising and lowering switches can be operated manually.

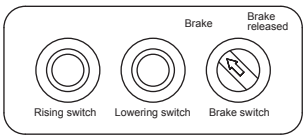

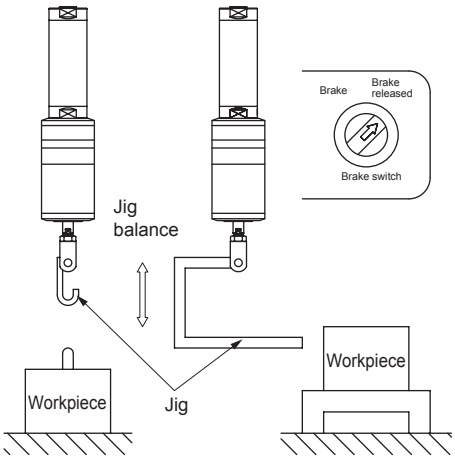

5) Set the workpiece into the jig.

6) Hold down the rising switch to lift the workpiece, releasing when the workpiece has risen about 50 mm.
The workpiece will balance about 1 second later.
(Note) The weight is detected about 1 second after releasing the switch. Please note that in the interim, any force applied to the workpiece or jig will be detected, causing improper balancing to occur.

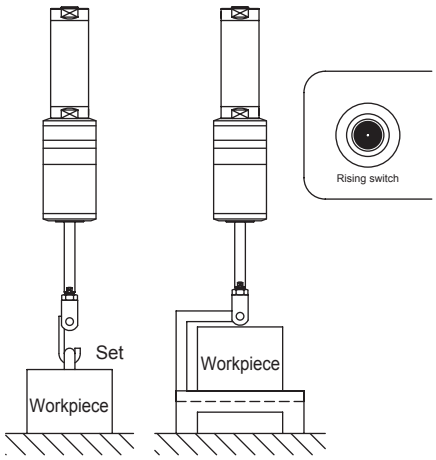

7) The rising and lowering switches can be operated manually. However, continuous operation (inching operation) with switch cannot be performed.

8) Set the workpiece in the required position and press the lowering switch for 1 second to balance the jig.

Return to 4) and then move to the following operation.

If the main air source is cut off due to trouble of some kind, position locking will be activated by the built-in brakes.
For safety reasons, return the brake switch to the braking position after completing operation.

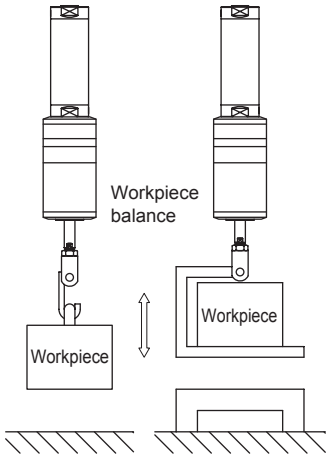

LCM
LCR
LCG
LCW
LCX
STM
STG
STS/STL
STR2
UCA2
ULK*
JSK/M2
JSG
JSC3/JSC4
USSD
UFCD
USC
UB
JSB3
LMB
LML
HCM
HCA
LBC
CAC4
UCAC2
CAC-N
UCAC-N
RCS2
RCC2
PCC
SHC
MCP
GLC
MFC
BBS
RRC
GRC
RV3*
NHS
HRL
LN
Hand
Chuk
MecHnd/Chuk
ShkAbs
FJ
FK
SpdContr
Ending

Technical data

Using the balancer unit more effectively

Standard usage

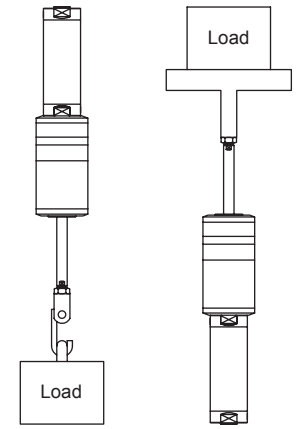

Model No.: D　　Model No.: U1

This is the simplest method of use.
The overall height of the unit increases if the cylinder stroke is long.
Operating force may increase slightly if the workpiece is moved rapidly due to flow resistance.

Speed multiplied usage

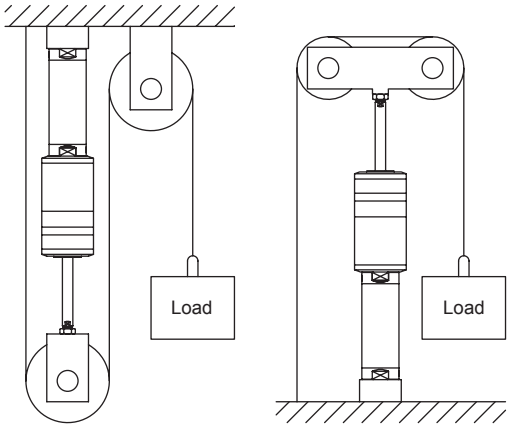

Model No.: U　　Model No.: U1

The overall height of the unit decreases as the cylinder stroke is halved compared to standard usage.
(At 2 times speed)
In theory the operating force is half that of the standard usage type, but the allowable maximum load is also halved.

Horizontal speed multiplied usage

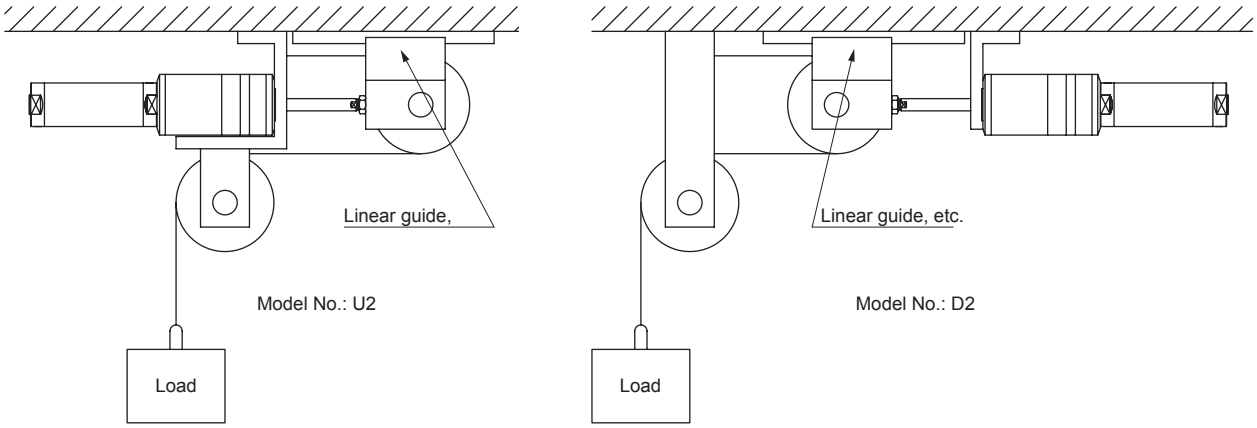

Model No.: U2　　Model No.: D2

The basic specifications are the same as speed multiplied usage, but the overall height of the unit decreases due to the cylinder being horizontal.
(At 2 times speed) In theory the operating force is half that of the standard usage type, but the allowable maximum load is also halved.
Use a linear guide and take care to ensure that self-weight moment of the piston rod or cylinder is not applied.

Lever usage

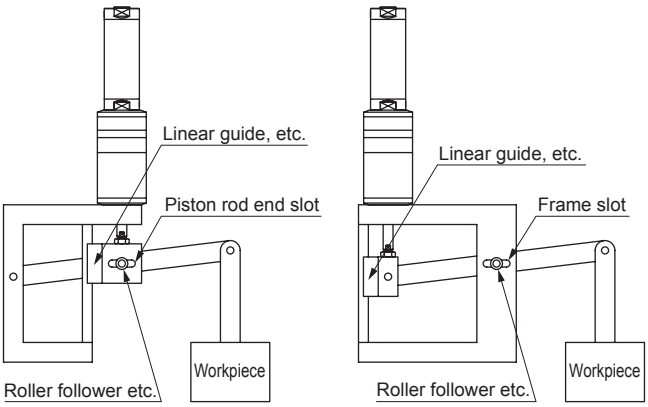

Model No.: D　　Model No.: U

Enables greater freedom of design as the speed multiplier can be freely selected using the lever ratio.
Theoretically, the operating force is divided by the lever ratio. However, the allowable maximum load is also divided by the lever ratio.
Take care to ensure the lever ratio does not change due to vertical operation by using roller followers, etc., and use a linear guide to ensure that eccentric load is not applied to the piston rod.

MEMO

Pneumatic components

Safety Precautions

Be sure to read this section before use.

Refer to Intro Page 73 for general information of the cylinder, and to Intro Page 80 for general information of the cylinder switch.

Product-specific cautions: Balancer unit BBS Series

Design/selection

WARNING

- Do not use the balancer unit at pressures exceeding the max. working pressure or working piston speed.
- Do not rotate the piston rod while brakes are on. It may cause damage.

CAUTION

- Compressed air must be clean and dry and passed through an air or oil mist filter. Install a filter on the circuit and note the filtration rating (5 μm or less required), flow rate, and mounting location (near the control circuit).
- When the automatic pressure adjustment is selected for the air method, be sure to use the control box (BBS-A-TB).
- Periodically discharge the drainage built up in the filter before it exceeds the specified line.
- The valve or cylinder could malfunction if carbonized compressor oil (carbon or tar, etc.) enters the circuit. Take sufficient care when performing compressor maintenance and inspection.
- This unit does not require lubrication. Moreover, lubricating may cause various problems, so refrain from doing so.
- This balancer unit should, in principle, be used indoors only. It can be used outdoors as a movable unit, but must be returned and stored indoors after use.
- Be sure to apply brakes when stepping away from the device during operation. Otherwise serious accidents such as jigs or workpieces falling could result.

Mounting, installation and adjustment

- This balancer unit has a mechanism that automatically detects the load applied to the piston rod; therefore, take care to ensure that eccentric load (tilted mounting or other eccentric loads) is not applied to the piston rod. The piston rod will operate poorly if an eccentric load is applied, requiring additional operating force. Furthermore, the automatic detection function may produce inaccurate results.

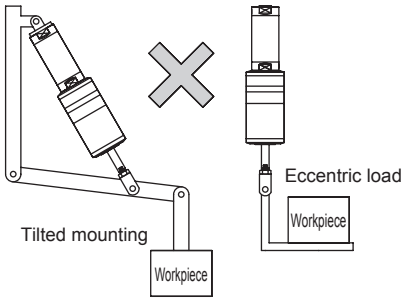

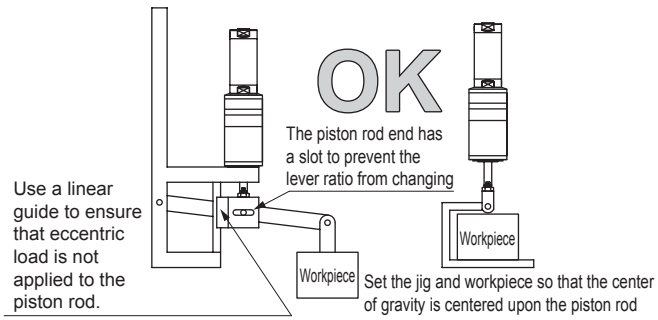

- When using the balancer horizontally, check that the piston rod and self-weight moment are not applied.

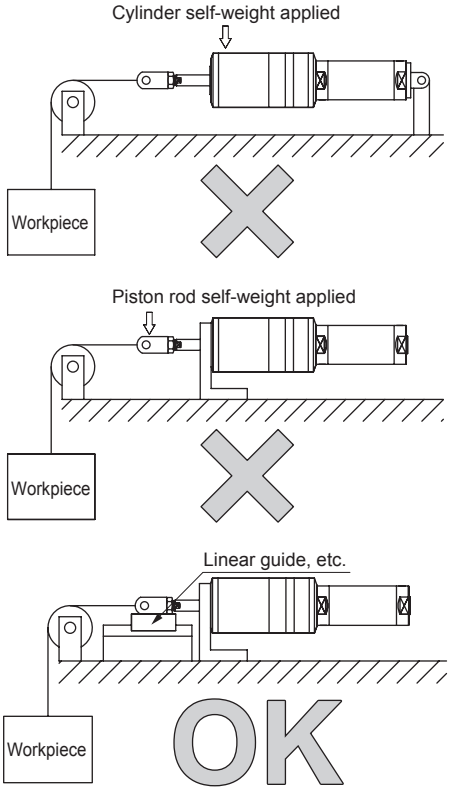

- When using with a link, use so that the lever ratio stays the same. (Example: fulcrum movement) If the lever ratio changes with vertical movement, the load could move up or down depending on the detection position regardless of manual operation.

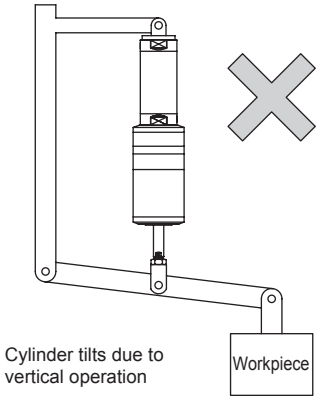

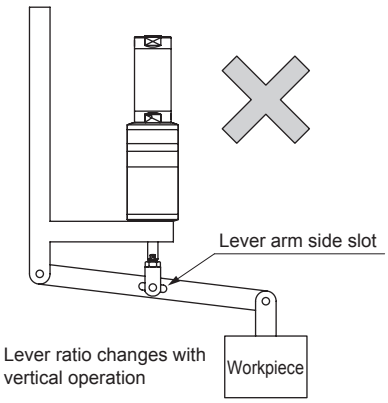

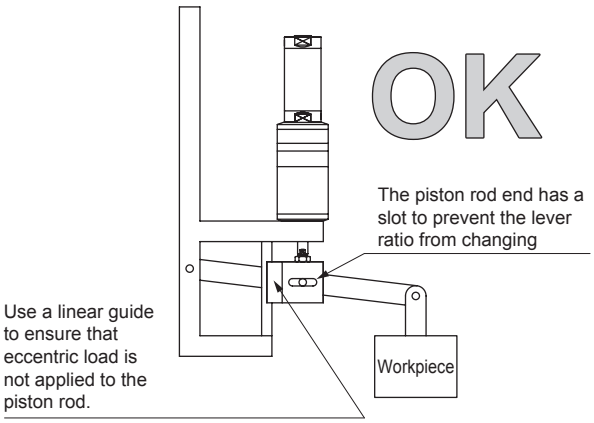

- Do not rotate the piston rod while holding the load with brakes.
  The piston rod and brake or detector are connected together, so the detector or brake may be damaged if a rotational torque is applied.

- The pilot chamber valve is mounted onto the product, so please do not loosen the bolts in an attempt to remove it. Otherwise air leaks could cause detection pressure to decrease and the jig or workpiece to fall during operation.

- Consider the supplied air flow rate when piping between the balancing unit and control box. Moreover, the control box should be placed as close to the balancer as possible in order to reduce the piping length. Otherwise the flow volume will decrease, piping length will increase and more operating force will be required.

- When the BBS-A air method is selected, use the pressure gauge and air lamp (use of 2 pressure gauges is possible) for the default setting. The customer is requested to prepare this equipment.

Use/maintenance

⚠ WARNING

- Do not disassemble the product.

⚠ CAUTION

- For safety reasons, return the brake switch to the braking position after completing operation.

Oscillation/rotation drive

	Page
Rotary actuator **RRC** Series	1283
Table rotary actuator **GRC** Series	1297
Rotary actuator with vane mechanism **RV3*** Series	1335

RRC

Rotary actuator

Size 8/32/63

Oscillation/rotation drive

Overview

This is a compact rack and pinion rotary actuator. Torque: 0.7, 3.1, 5.6 N·m

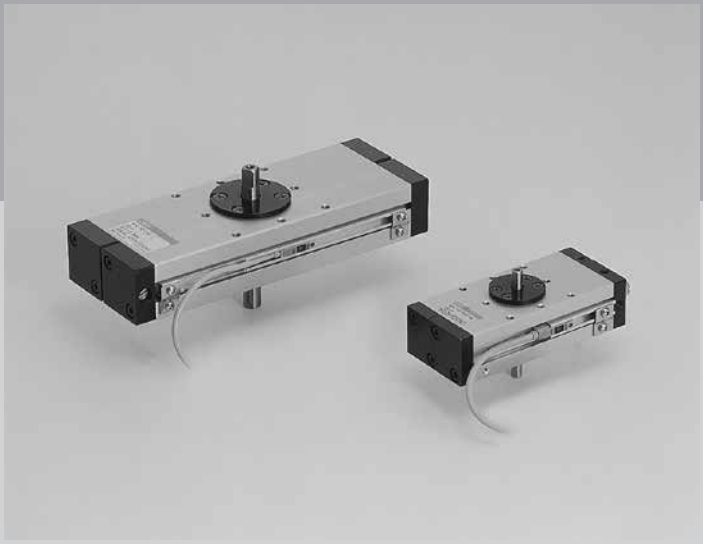

CONTENTS

Series variation	1284
Product introduction	1284
● Rack & pinion (RRC)	1286
Selection guide	1292
⚠ Safety precautions	1294

The cylinder switches T2YH, T2YV, T3YH, and T3YV are scheduled for end of production at the end of December 2023.

Rotary actuator RRC Series

Variation	Model No. JIS symbol	Size	Effective torque (0.5 MPa) (N·m)	Max. oscillating angle (°)	
				90	
Rack and pinion	RRC	8	0.7	●	
		32	3.1		
		63	5.6		

Product introduction

● Max. oscillating angle 270°
Torques of 0.7, 3.1, 5.6 N·m (working pressure 0.5 MPa) and oscillating angles of 90°, 180°, 270°, are included in the series.
Select the ideal model for your application.

● Space saving
Compact and thin design permits installation in a narrow space.

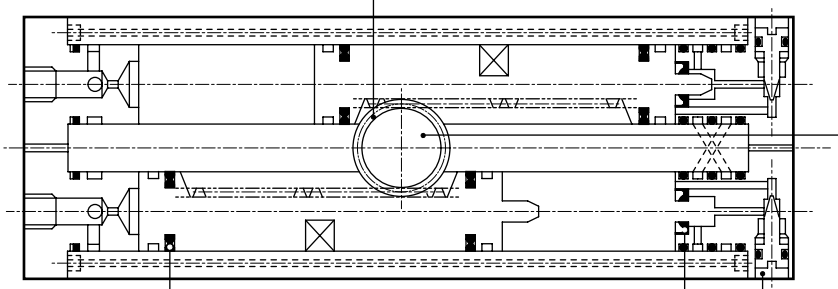

● Stable torque/long service life
Uses a unique mechanism combining two linear cylinders with rack and pinion gears. Torque is stable even at low pressure, and internal/external leakages are the same as that of the linear cylinder. Furthermore, long service life is achieved.

● Cushion needle direction can be changed
RRC-32 and 63 only are 3-directional.

● No lubrication
No-lubrication usage is possible.
Total operation costs will be reduced.

● Cushion provided as standard
Rubber cushion or air cushion is provided as standard.

LCM
LCR
LCG
LCW
LCX
STM
STG
STS/STL
STR2
UCA2
ULK*
JSK/M2
JSG
JSC3/JSC4
USSD
UFCD
USC
UB
JSB3
LMB
LML
HCM
HCA
LBC
CAC4
UCAC2
CAC-N
UCAC-N
RCS2
RCC2
PCC
SHC
MCP
GLC
MFC
BBS
RRC
GRC
RV3*
NHS
HRL
LN
Hand
Chuk
MecHnd/Chuk
ShkAbs
FJ
FK
SpdContr
Ending

●: Standard, ◎: Option, ○: Made to order, ▒: Not available

Max. oscillating angle (°)			Option		Switch	Page
			Adjustable angle	Copper and PTFE free		
	180	270	A	P6		
	●	●	◎	◎	◎	1286

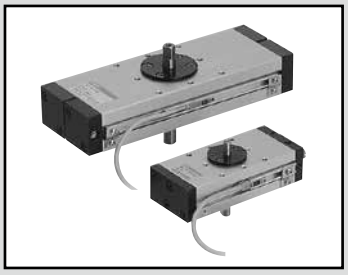

Rotary actuator Rack & pinion

RRC Series

- Size: 8/32/63
- Oscillating angle: 90°/180°/270°

JIS symbol

RoHS CAD

Specifications

Item		RRC		
Size		8	32	63
Effective torque*1 N·m		0.7	3.1	5.6
Actuation		Rack and pinion mechanism		
Working fluid		Compressed air		
Max. working pressure MPa		1.0 (≈150 psi, 10 bar)		
Min. working pressure*2 MPa		0.1 (≈15 psi, 1 bar)		
Proof pressure MPa		1.6 (≈230 psi, 16 bar)		
Ambient temperature °C		-10 (14°F) to 60 (140°F) (no freezing)		
Port size		Rc1/8		
Oscillating angle tolerance °		90^{+8}_{+1}, 180^{+8}_{+1}, 270^{+8}_{+1}		
Cushion		Rubber cushion	Air cushion	
Effective cushion length mm		-	4.8	5.8
Allowable absorbed energy J		0.05	0.21	0.41
Volumetric capacity cm^3	90°	3	12	22
	180°	6	24	44
	270°	9	36	66
Lubrication		Not required (use turbine oil ISO VG32 if necessary for lubrication)		

*1 : Effective torque value is at working pressure 0.5 MPa.
*2 : When using RRC-8 with max. oscillating angle, the working pressure is to be 0.3 MPa and over.
*3 : Adjustable angle is available as an option. Refer to page 1291.

Max. load

Use the load applied to the shaft at the values below or less.

Unit: N

Model No. / Load direction	RRC-8	RRC-32	RRC-63
Thrust load F1	9.8	39.2	58.8
Radial load F2	19.6	78.4	117.6

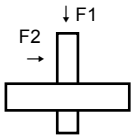

Switch specifications

- 1-color/2-color display

Item	Proximity 2-wire	Proximity 2-wire			Proximity 3-wire				Reed 2-wire						
	T1H/ T1V	T2H/ T2V	T2YH/ T2YV	T2WH/ T2WV	T3H/ T3V	T3PH/ T3PV	T3YH/ T3YV	T3WH/ T3WV	T0H/T0V		T5H/T5V		T8H/T8V		
Applications	For programmable controller, relay, compact solenoid valve	Dedicated for programmable controller			For programmable controller, relay				For programmable controller, relay		For programmable controller, relay, IC circuit (no indicator lamp), serial connection		For programmable controller, relay		
Output method	-				NPN output	PNP output	NPN output	NPN output	-						
Pwr. supp. V.	-				10 to 28 VDC				-						
Load voltage	85 to 265 VAC	10 to 30 VDC		24 VDC ±10%	30 VDC or less				12/24 VDC	100/110 VAC	5/12/24 VDC	100/110 VAC	12/24 VDC	110 VAC	220 VAC
Load current	5 to 100 mA	5 to 20 mA (*3)			100 mA or less		50 mA or less		5 to 50 mA	7 to 20 mA	50 mA or less	20 mA or less	5 to 50 mA	7 to 20 mA	7 to 10 mA
Indicator lamp	LED (Lit when ON)	LED (Lit when ON)	Red/green LED (Lit when ON)	Red/green LED (Lit when ON)	LED (Lit when ON)	Yellow LED (Lit when ON)	Red/green LED (Lit when ON)	Red/green LED (Lit when ON)	LED (Lit when ON)		Without indicator lamp		LED (Lit when ON)		
Leakage current	≤ 1 mA at 100 VAC, ≤ 2 mA at 200 VAC	1 mA or less			10 μA or less				0 mA						
Weight g	1 m: 33 3 m: 87 5 m:142	1 m:18 3 m:49 5 m:80	1 m: 33 3 m: 87 5 m:142	1 m:18 3 m:49 5 m:80	1 m:18 3 m:49 5 m:80		1 m: 33 3 m: 87 5 m:142	1 m:18 3 m:49 5 m:80	1 m:18 3 m:49 5 m:80				1 m: 33 3 m: 87 5 m:142		

*1 : Refer to Ending Page 1 for detailed switch specifications and dimensions.
*2 : Switches other than the above models, such as switches with connectors, are also available. Refer to Ending Page 1.
*3 : The max. load current is 20 mA at 25°C. The current is lower than 20 mA if the operating ambient temperature around the switch is higher than 25°C. (5 to 10 mA at 60°C)

Cylinder weight

Unit: kg

Oscillating angle / Model No.	90°	180°	270°	Switch weight (per 1 pc.)	Switch mounting bracket 90°	180°	270°
RRC-8	0.39	0.43	0.49	Refer to the weight in the switch specifications.	0.005		
RRC-32	1.02	1.23	1.45		0.011	0.013	0.015
RRC-63	1.68	2.03	2.37		0.012	0.014	0.016

(Example) Product weight of RRC-8-90-T2H-D

Body weight..... 0.39 kg
Switch weight ..... 0.018 2 pcs. = 0.036 kg
Switch mounting bracket weight.... 0.005 2 pcs. = 0.010 kg
Product weight ..... 0.39 kg + 0.036 kg + 0.010 kg = 0.436 kg

LCM
LCR
LCG
LCW
LCX
STM
STG
STS/STL
STR2
UCA2
ULK*
JSK/M2
JSG
JSC3/JSC4
USSD
UFCD
USC
UB
JSB3
LMB
LML
HCM
HCA
LBC
CAC4
UCAC2
CAC-N
UCAC-N
RCS2
RCC2
PCC
SHC
MCP
GLC
MFC
BBS
RRC
GRC
RV3*
NHS
HRL
LN
Hand
Chuk
MecHnd/Chuk
ShkAbs
FJ
FK
SpdContr
Ending

How to order

Without switch (built-in magnet for switch)

RRC - 8 - 90 ——— A

With switch (built-in magnet for switch)

RRC - 8 - 90 - T2H - R - A

Ⓐ Size

Ⓑ Max. oscillating angle

Ⓒ Switch model No.
* indicates the lead wire length.

Ⓓ Switch quantity

Ⓔ Option

Code	Description
Ⓐ Size	
Model No.	**Effective torque**
8	0.7 [N·m]
32	3.1 [N·m]
63	5.6 [N·m]
Ⓑ Max. oscillating angle	
90	90°
180	180°
270	270°

Ⓒ Switch model No.

Axial lead wire	Radial lead wire	Contact	Voltage AC	Voltage DC	Indicator	Lead wire
T0H*	**T0V***	Reed	●	●	1-color display	2-wire
T5H*	**T5V***		●	●	Without indicator lamp	
T8H*	**T8V***		●	●	1-color display	
T1H*	**T1V***	Proximity	●		1-color display	2-wire
T2H*	**T2V***			●		
T3H*	**T3V***			●		3-wire
T2WH*	**T2WV***			●	2-color display	2-wire
T2YH*	**T2YV***			●		2-wire
T3WH*	**T3WV***			●		3-wire
T3YH*	**T3YV***			●		3-wire
T3PH*	**T3PV***			●	1-color display	3-wire

*** Lead wire length**	
Blank	1 m (standard)
3	3 m (option)
5	5 m (option)
Ⓓ Switch quantity	
R	With clockwise rotation detection 1 piece
L	With counterclockwise rotation detection 1 piece
D	2
Ⓔ Option	
A	Adjustable angle
P6	Copper and PTFE free

[Example of model No.]

RRC-8-90-T2H-R-A

Model: Rotary actuator rack & pinion

Ⓐ Size : 8
Ⓑ Max. oscillating angle : 90°
Ⓒ Switch model No. : Proximity T2H switch, lead wire 1 m
Ⓓ Switch quantity : With clockwise rotation detection 1 piece
Ⓔ Option : Adjustable angle

How to order switch

● Switch body + mounting bracket set (including rail)

RRC - T2H* - 8 - 90
(Ⓒ) (Ⓐ) (Ⓑ)

Switch model No. (Item Ⓒ above)
Size (Item Ⓐ above)
Max. oscillating angle (Item Ⓑ above)

● Switch body only

SW - T2H*

Switch model No. (Item Ⓒ above)

● Mounting bracket set (including rail)

RRC - T - 8 - 90

Bracket

Size (Item Ⓐ above)
Max. oscillating angle (Item Ⓑ above)

Torque

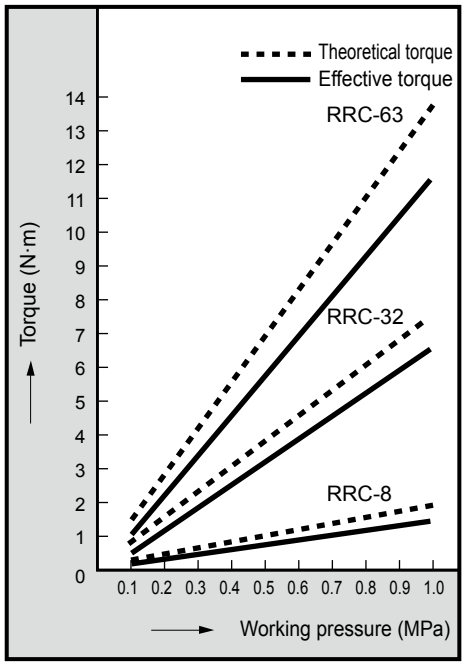

LCM
LCR
LCG
LCW
LCX
STM
STG
STS/STL
STR2
UCA2
ULK*
JSK/M2
JSG
JSC3/JSC4
USSD
UFCD
USC
UB
JSB3
LMB
LML
HCM
HCA
LBC
CAC4
UCAC2
CAC-N
UCAC-N
RCS2
RCC2
PCC
SHC
MCP
GLC
MFC
BBS
RRC
GRC
RV3*
NHS
HRL
LN
Hand
Chuk
MecHnd/Chuk
ShkAbs
FJ
FK
SpdContr
Ending

Internal structure and parts list

● Standard

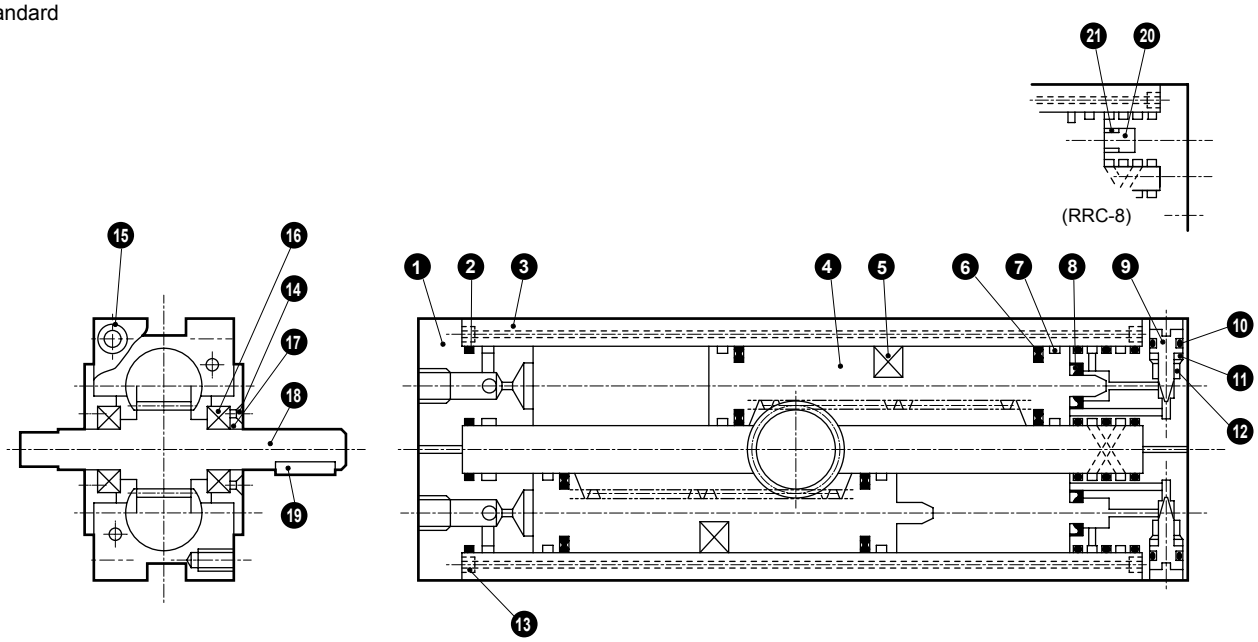

● With switch

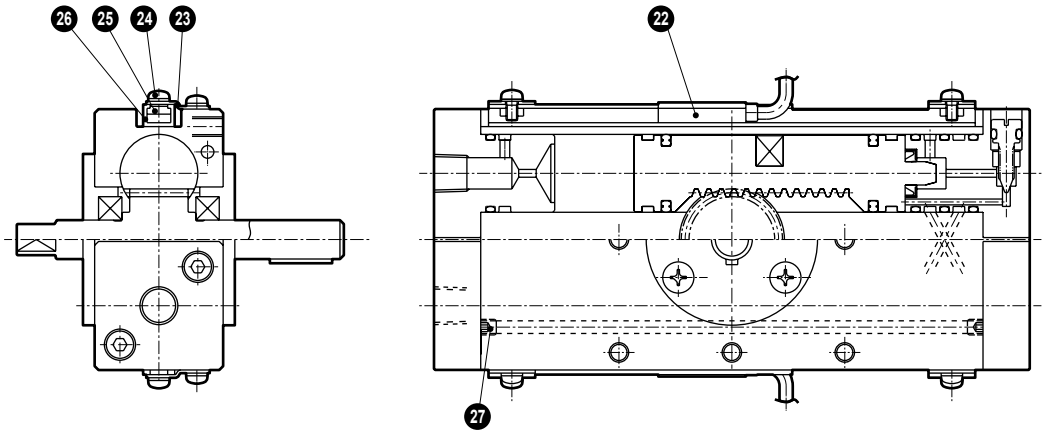

No.	Part name	Material	Remarks	No.	Part name	Material	Remarks
1	Cap (2)	Aluminum alloy		16	Bearing	——	
2	Cap gasket	Nitrile rubber		17	Cover	Aluminum alloy	
3	Body	Aluminum alloy		18	Shaft	Steel	
4	Piston	Stainless steel		19	Key	Steel	
5	Magnet	Plastic		20	Cushion rubber	Urethane rubber	RRC-8 only
6	Piston packing	Nitrile rubber		21	DU bush	——	RRC-8 only
7	Wear ring	Acetal resin		22	Switch	——	
8	Cushion packing	Nitrile rubber	Excluding RRC-8	23	Stop plate	Stainless steel	
9	Needle	Copper alloy	Excluding RRC-8	24	Phillips pan head machine screw/captive washer	Steel	
10	Needle gasket	Nitrile rubber	Excluding RRC-8	25	Fixing nut	Stainless steel	
11	Cap (1)	Aluminum alloy		26	Switch rail	Aluminum alloy	
12	U nut	Steel	Excluding RRC-8	27	Hexagon socket set screw	Steel	
13	Hexagon socket set screw	Alloy steel					
14	Phillips flat head machine screw	Steel					
15	Hexagon socket head cap screw	Alloy steel					

Repair parts list

Model No.	Kit No.	Repair parts No.
RRC-8	RRC-8K	❷ ❻ ❼
RRC-32	RRC-32K	❷ ❻ ❼ ❽ ❿
RRC-63	RRC-63K	

Note: Specify the kit No. when placing an order.

Dimensions

● RRC-8

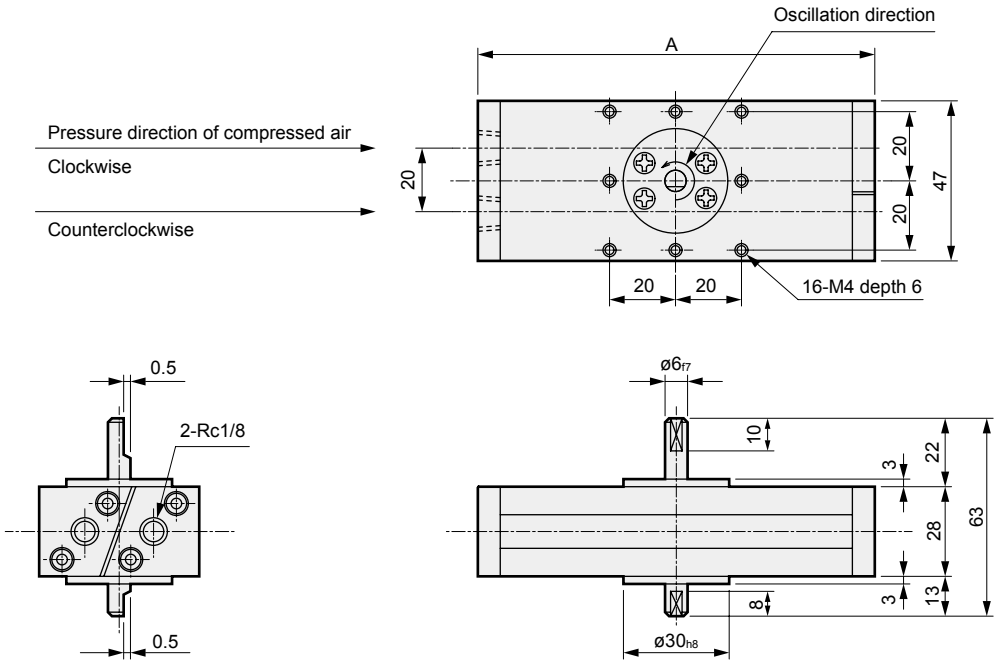

Code / Model No.	A Oscillating angle 90°	180°	270°
RRC-8	94	109	124

● With RRC-8 switch

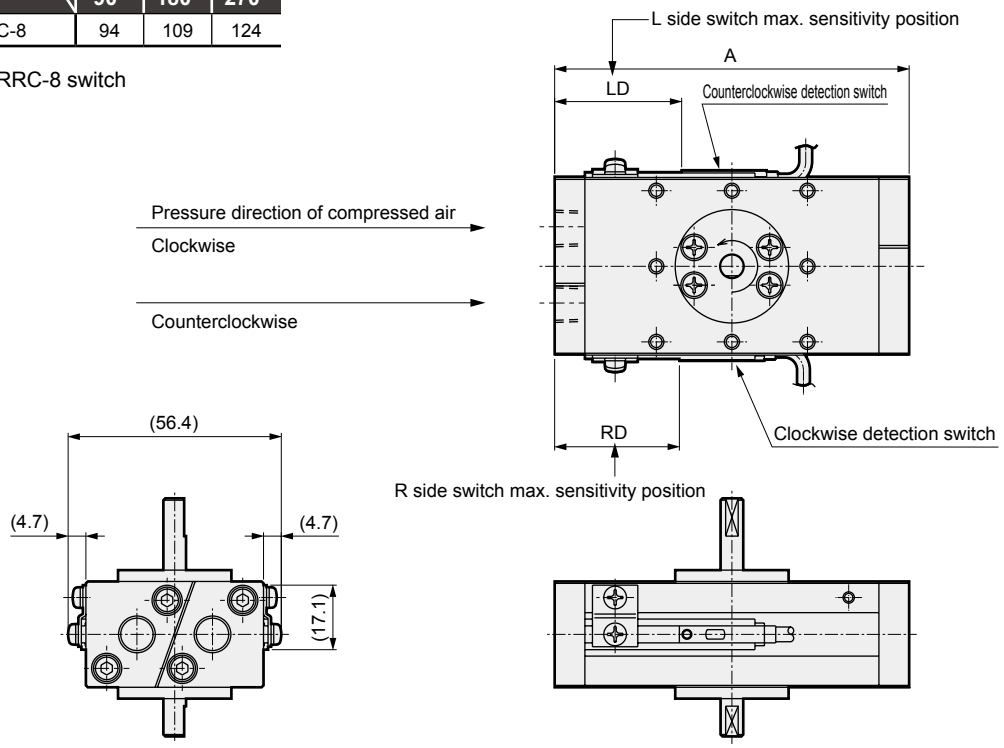

Code / Model No.	A Oscillating angle			RD T1* Oscillating angle			T2*/T3* Oscillating angle			T0*/T5* Oscillating angle			T8* Oscillating angle			T2Y*/T3Y* Oscillating angle			T2W*/T3W* Oscillating angle		
	90°	180°	270°	90°	180°	270°	90°	180°	270°	90°	180°	270°	90°	180°	270°	90°	180°	270°	90°	180°	270°
RRC-8	94	109	124	31	36	40	33	37	41	30	37	41	24	31	35	31	36	40	34	39	43

Code / Model No.	LD T1* Oscillating angle			T2*/T3* Oscillating angle			T0*/T5* Oscillating angle			T8* Oscillating angle			T2Y*/T3Y* Oscillating angle			T2W*/T3W* Oscillating angle		
	90°	180°	270°	90°	180°	270°	90°	180°	270°	90°	180°	270°	90°	180°	270°	90°	180°	270°
RRC-8	31	36	40	33	37	41	30	37	41	24	31	35	31	36	40	34	39	43

Note: Dimensions other than the above are the same as the type without switch.

LCM
LCR
LCG
LCW
LCX
STM
STG
STS/STL
STR2
UCA2
ULK*
JSK/M2
JSG
JSC3/JSC4
USSD
UFCD
USC
UB
JSB3
LMB
LML
HCM
HCA
LBC
CAC4
UCAC2
CAC-N
UCAC-N
RCS2
RCC2
PCC
SHC
MCP
GLC
MFC
BBS
RRC
GRC
RV3*
NHS
HRL
LN
Hand
Chuk
MecHnd/Chuk
ShkAbs
FJ
FK
SpdContr
Ending

Dimensions

● RRC-32/63

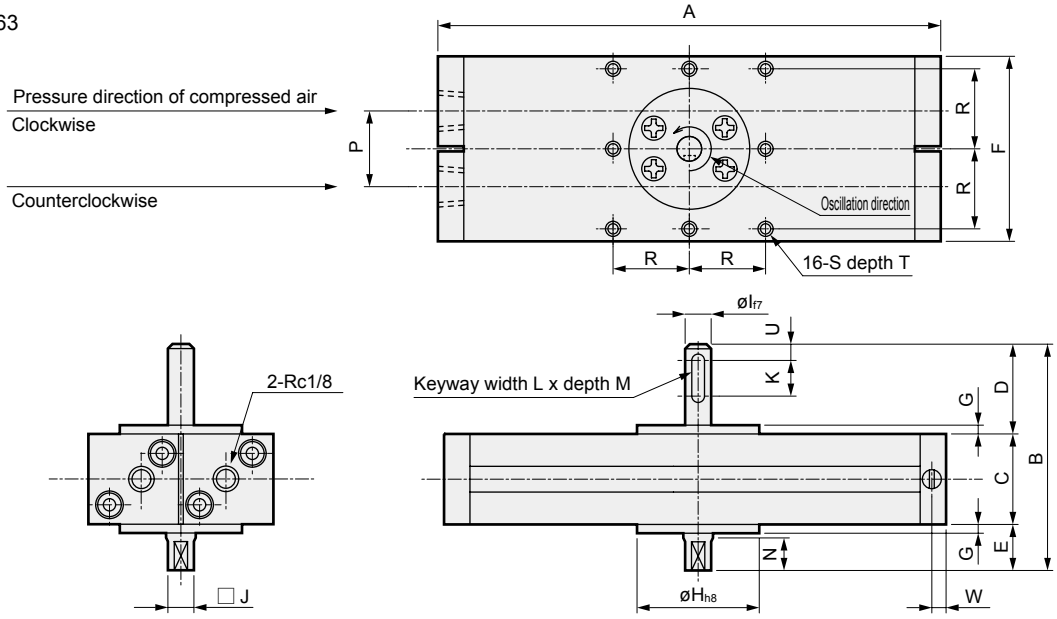

* The key is attached when shipping.

Code / Model No.	A Oscillating angle 90°	A 180°	A 270°	B	C	D	E	F	G	H	I	J	K	L	M	N	P	R	S	T	U	W
RRC-32	153	191	229	84	33	31	20	67	3	44	10	8	13	3	1.8	10	34	29	M5	8	4.5	6
RRC-63	172	216	260	101	38	41.5	21.5	78	4.5	52	12	10	16	4	2.5	13	40	34	M6	9	7	7

● RRC-32/63 with switch

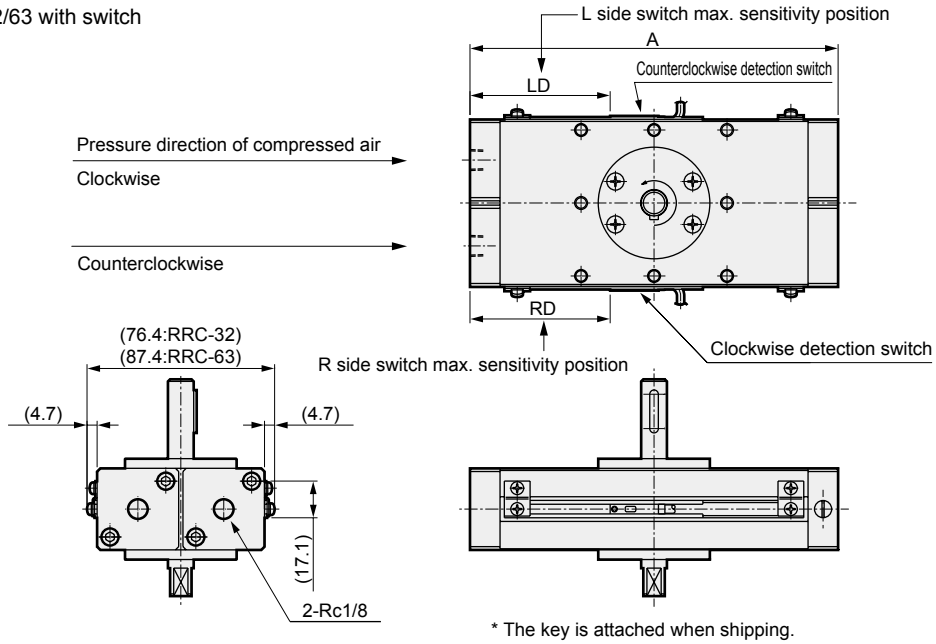

* The key is attached when shipping.

Code / Model No.	A Oscillating angle 90°	A 180°	A 270°	RD T1* Oscillating angle 90°	180°	270°	T2*/T3* Oscillating angle 90°	180°	270°	T0*/T5* Oscillating angle 90°	180°	270°	T8* Oscillating angle 90°	180°	270°	T2Y*/T3Y* Oscillating angle 90°	180°	270°	T2W*/T3W* Oscillating angle 90°	180°	270°
RRC-32	153	191	229	56	66	75	58	67	77	57	67	76	51	61	70	56	66	75	59	69	78
RRC-63	172	216	260	64	75	86	65	76	87	65	76	87	59	70	81	64	75	86	67	78	89

Code / Model No.	LD T1* Oscillating angle 90°	180°	270°	T2*/T3* Oscillating angle 90°	180°	270°	T0*/T5* Oscillating angle 90°	180°	270°	T8* Oscillating angle 90°	180°	270°	T2Y*/T3Y* Oscillating angle 90°	180°	270°	T2W*/T3W* Oscillating angle 90°	180°	270°
RRC-32	56	66	75	58	67	77	57	67	76	51	61	70	56	66	75	59	69	78
RRC-63	64	75	86	65	76	87	65	76	87	59	70	81	64	75	86	67	78	89

Note: Dimensions other than the above are the same as the type without switch.

LCM
LCR
LCG
LCW
LCX
STM
STG
STS/STL
STR2
UCA2
ULK*
JSK/M2
JSG
JSC3/JSC4
USSD
UFCD
USC
UB
JSB3
LMB
LML
HCM
HCA
LBC
CAC4
UCAC2
CAC-N
UCAC-N
RCS2
RCC2
PCC
SHC
MCP
GLC
MFC
BBS
RRC
GRC
RV3*
NHS
HRL
LN
Hand
Chuk
MecHnd/Chuk
ShkAbs
FJ
FK
SpdContr
Ending

Dimensions: Option

● Adjustable angle

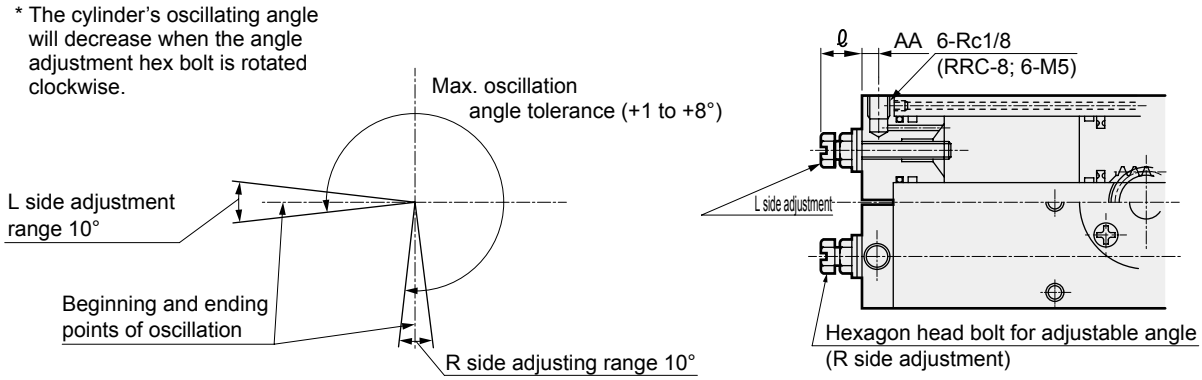

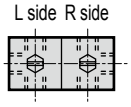

3 port positions each are provided on the R and L sides, as in the figure above.

Code / Model No.	ℓ MIN	ℓ MAX	AA	Allowable absorbed energy J (For adjustable angle single 10°)	Hexagon head bolt dimension for adjustable angle (Common for R and L)
RRC-8	10.7	11.5	4	0.02	M5×0.5
RRC-32	13.4	15.5	6	0.06	M6×0.75
RRC-63	13.5	16.0	7	0.13	M6×0.75

● Key dimensional drawing

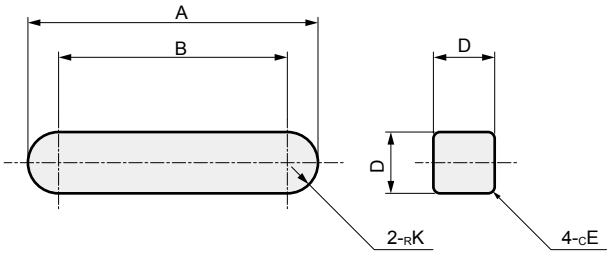

Code / Model No.	A	B	K	D	E
RRC-32	$16^{0}_{-0.18}$	13	1.5	$3^{0}_{-0.025}$	0.2
RRC-63	$20^{0}_{-0.21}$	16	2	$4^{0}_{-0.030}$	0.2

LCM
LCR
LCG
LCW
LCX
STM
STG
STS/STL
STR2
UCA2
ULK*
JSK/M2
JSG
JSC3/JSC4
USSD
UFCD
USC
UB
JSB3
LMB
LML
HCM
HCA
LBC
CAC4
UCAC2
CAC-N
UCAC-N
RCS2
RCC2
PCC
SHC
MCP
GLC
MFC
BBS
RRC
GRC
RV3*
NHS
HRL
LN
Hand
Chuk
MecHnd/Chuk
ShkAbs
FJ
FK
SpdContr
Ending

Selection guide of rotary actuator

Step 1 Oscillating time check

Use an oscillating time within the specified range of the table below. Unit: S

Oscillating angle (degree) / Model No.	90	180	270
RRC-8	0.015 to 0.151	0.030 to 0.302	0.045 to 0.452
RRC-32	0.038 to 0.377	0.075 to 0.754	0.113 to 1.131
RRC-63	0.073 to 0.440	0.147 to 0.880	0.220 to 1.320

* The oscillating time in the table is the time for the oscillating to end after movement begins.

Step 2 Size selection

● When simple static pushing force is required for clamp, etc.

Static load

(1) Determine the working pressure. P(MPa)
(2) Determine the required force. F(N)
(3) Length of arm from rotary actuator is determined. ℓ(m)

➡ Calculation of required torque

$T = F\ell$ (N·m)

➡ Determine size of rotary actuator according to output torque graph.

● To move load

Resistance load

When applying force (resistance load) including frictional force, gravity or other external forces.
(1) Determine the working pressure. P(MPa)
(2) Determine the required force. F_R(N)
(3) Length of arm from rotary actuator is determined. ℓ(m)

➡ Calculation of resistance torque

$T_R = K \times F_R \times \ell$ (N·m)

K: Slack coefficient
If no load fluctuation K = 2
If load fluctuates K = 5
(When resistance torque caused by gravity operates)
If load fluctuates when K < 5, the change in angular speed increases.

Inertia load

When the object is rotated.
(1) Oscillating angle/oscillating time and working pressure are determined.
Oscillating angle θ (rad)
Oscillating time t(s)
Working pressure P(MPa)
90°=1.5708(rad)
180°=3.1416(rad)
270°=4.7124(rad)
(2) Calculate the load moment of the inertia according to the load shape and weight. Refer to moment of inertia table for the calculation formula.
I (kg·m^2)
(3) Calculate the max. angular acceleration speed.

$$\alpha = \frac{2\theta}{t^2} \text{ (rad/s}^2\text{)}$$

θ: Oscillating angle (rad)
t: Oscillating time (s)

➡ Calculation of acceleration torque

$T_A = 5 \times I \times \alpha$ (N·m)

T_A is the required torque to accelerate inertia load until set speed.

⬆

Required torque $T = T_R + T_A$

➡ Determine size of rotary actuator according to output torque graph.

Step 3 Check of allowable energy

When using an inertial load, keep the load energy lower than the rotary actuator's allowable energy.

(1) Angular speed at oscillation edge $\omega = \frac{2\theta}{t}$ (rad/s)
θ: Oscillating angle (rad) t: Oscillating time (s)

(2) Calculation of load inertia energy

$$E = \frac{1}{2} \times I \times \omega^2 \text{ (J)}$$

I: Load moment of inertia (kg·m^2)

(3) Confirm that the load inertia energy E is equal to or less than the allowable energy of the rotary actuator.
When exceeding the allowable energy, an external shock absorber, etc., will be required.

Figure for moment of inertia calculation

● When rotary shaft passes through the workpiece

Shape	Sketch	Requirements	Moment of inertia I kg·m²	Radius of rotation K_1^2	Remarks
Dial plate	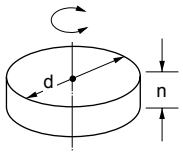	● Diameter d(m) ● Weight M(kg)	$I = \frac{Md^2}{8}$	$\frac{d^2}{8}$	● No mounting direction ● For sliding use, contact CKD.
Circular stepped plate	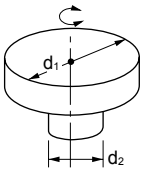	● Diameter d_1(m) d_2(m) ● Weight d_1 section M_1(kg) d_2 section M_2(kg)	$I = \frac{1}{8}(M_1d_1^2+M_2d_2^2)$	$\frac{d_1^2+d_2^2}{8}$	● Ignore when the d_2 section is extremely small compared to the d_1 section
Bar (center of rotation at end)	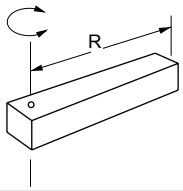	● Bar length R(m) ● Weight M(kg)	$I = \frac{MR^2}{3}$	$\frac{R^2}{3}$	● Mounting direction is horizontal ● Oscillating time changes when the mounting direction is vertical
Thin rod	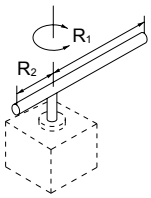	● Bar length R_1 R_2 ● Weight M_1 M_2	$I = \frac{M_1/R_1^2}{3} + \frac{M_2/R_2^2}{3}$	$\frac{R_1^2+R_2^2}{3}$	● Mounting direction is horizontal ● Oscillating time changes when the mounting direction is vertical
Bar (center of rotation at center of gravity)	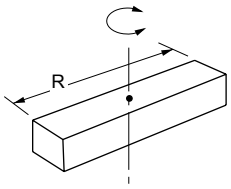	● Bar length R(m) ● Weight M(kg)	$I = \frac{MR^2}{12}$	$\frac{R^2}{12}$	● No mounting direction
Thin rectangle plate (rectangular parallelepiped)	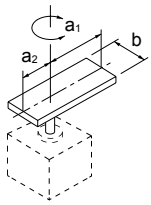	● Plate length a_1 a_2 ● Side length b ● Weight M_1 M_2	$I = \frac{M_1}{12}(4a_1^2+b^2) = \frac{M_2}{12}(4a_2^2+b^2)$	$\frac{(4a_1^2+b^2)+(4a_2^2+b^2)}{12}$	● Mounting direction is horizontal ● Oscillating time changes when the mounting direction is vertical
Rectangular parallelepiped	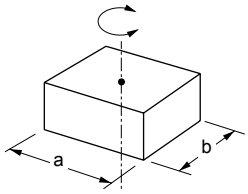	● Side length a(m) b(m) ● Weight M(kg)	$I = \frac{M}{12}(a^2+b^2)$	$\frac{a^2+b^2}{12}$	● No mounting direction ● For sliding use, contact CKD.
Concentrated load	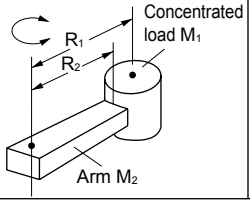	● Shape of concentrated load ● Length to center of gravity of concentrated load R_1(m) ● Arm length R_2(m) ● Concentrated load weight M_1(kg) ● Arm weight M_2(kg)	$I = M_1(R_1^2+k_1^2) + \frac{M_2R_2^2}{3}$	Calculate k_1^2 according to shape of concentrated load	● Mounting direction is horizontal ● When M_2 is extremely small compared to M_1, it may be calculated as $M_2 = 0$

How to convert load J_L to rotary actuator shaft rotation when using with gear

Gear	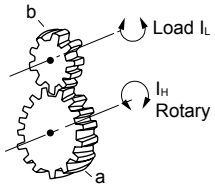	● Gear - Rotary side (tooth number) a, Load side (tooth number) b ● Load moment of inertia N·m	Load moment of inertia for the rotary actuator's shaft rotation $I_H = \left(\frac{a}{b}\right)^2 I_L$		● When gear shape is larger, gear moment of inertia should be considered.

Pneumatic components

Safety Precautions

Be sure to read this section before use.
Refer to Intro Page 73 for general information of the cylinder, and to Intro Page 80 for general information of the cylinder switch.

Product-specific cautions: Rotary actuator rack and pinion mechanism RRC Series

Design/selection

CAUTION

■ Do not apply torque exceeding rated output externally to the product.
If force exceeding rated output is applied, the product could be damaged.

■ If oscillating angle repeatability is required, directly stop external load.
The initial oscillating angle may change even with products provided with adjustable angles.

■ If the axial load (thrust load) on the shaft exceeds the allowable value, faulty operation could occur. Therefore, do not apply a load in excess of the allowable value. If this is unavoidable, use a structure with a thrust bearing as shown in Fig.1.

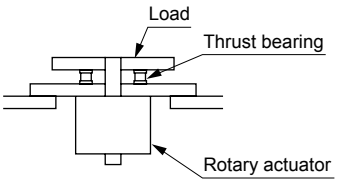

Fig. 1

■ Avoid applying bending (radial) load exceeding the allowable value onto the shaft end, or faulty operation could occur.
When unavoidable, use a mechanism transmitting only rotation as shown in Fig. 2.
When connecting the shaft end and load at any position in the oscillation range, use flexible couplings, etc., that will not twist off to prevent the shaft from breaking and bearings from wearing or seizing.

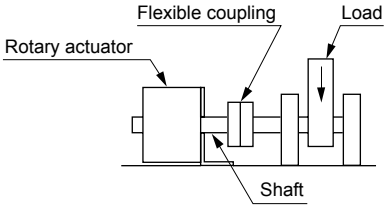

Fig. 2 Radial load

■ Install the external stopper in a position far from the rotary shaft.
If the stopper is installed near the rotary shaft, torque generated by the product could be applied to the rotary shaft. This reaction on the stopper may damage the rotary shaft or bearings, possibly resulting in injury to the operator or damage to equipment or devices.

■ If the load weight is large and oscillation speed is high, large inertia could be generated and allowable absorbed energy exceeded, possibly damaging the rotary actuator.
Install a shock absorber to absorb inertia.

■ When installing a load or jig, etc., on the rotary actuator shaft, check that load is not applied to the body as shown in Fig.3.

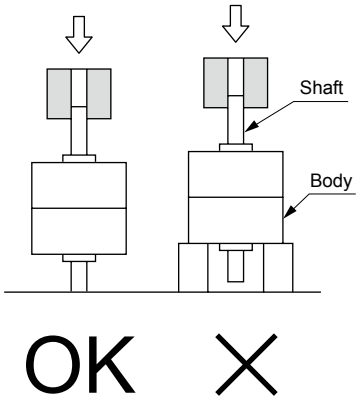

Fig. 3

■ Prevent seizing at rotating sections.
Apply grease to rotating sections (pins, etc.) to prevent seizing.

■ The retention torque of the oscillating end is about half that of the effective torque, so a load factor of 50% or less should be used.

■ Generally, select the model so that the output torque is twice or more than that required by load.
The RRC Series uses a double piston, so if the oscillating angle is adjusted by the stopper bolt, torque at the oscillation end will be half the effective torque.

■ Even if the required torque load is low during oscillation motion, the load inertia may lead to actuator damage. Upon consideration of moment of inertia, kinetic energy and oscillating time, be sure to use with the allowable energy or less.

Mounting, installation and adjustment

⚠ CAUTION

■ When adjusting the angle by supplying pressure, do not rotate the device too much in advance.
When adjusting while supplying pressure, the device could rotate and drop during adjustment, depending on how it is oriented, possibly resulting in operator, component, or device injury or damage.

■ Do not loosen the angle adjustment hexagon bolt beyond the adjusting range.
Loosening more than the adjusting range may cause the angle adjustment bolt to fall out, potentially causing bodily injury or damage to the workpiece/device/equipment.
The cylinder's oscillating angle will decrease when the angle adjustment hexagon bolt is rotated clockwise.

■ Observe steps (1) to (5) when adjusting the angle. If adjustments are not made this way, the seal washer will be damaged after one or two adjustments.

[Angle adjustment procedure]

(1) First loosen the hexagon nut as shown in Fig.1.

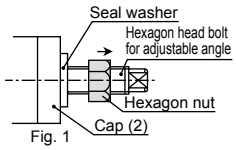

Fig. 1

(2) Second, remove the seal washer cap (2) by hand to reach the state shown in Fig. 2.

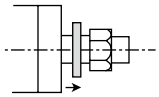
Fig. 2

(3) Turn the angle adjustment hexagon bolt, hexagon nut, and seal washer together as shown in Fig.3, and adjust the angle. Check that the rubber section of the seal washer does not bite into the thread part.

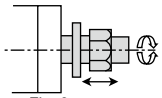
Fig. 3

(4) After adjusting the angle, move the seal washer near to the cap (2) by hand as shown in Fig. 4.

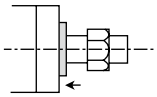
Fig. 4

(5) Tighten securely with the hexagon nut as shown in Fig. 5. Check that the rubber section of the seal washer does not bite into the thread part.

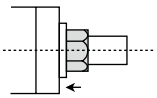
Fig. 5

■ Securely tighten the hexagon nut after adjusting the angle. If not adequately tightened, the hex nut could loosen in the course of usage, resulting in external leakage.

GRC

Table rotary actuator

Size 5/10/20/30/50/80

Oscillation/rotation drive

Overview

The table rotary actuator with rack and pinion realizes high load, direct mounting and high position accuracy thanks to a bearing guide.

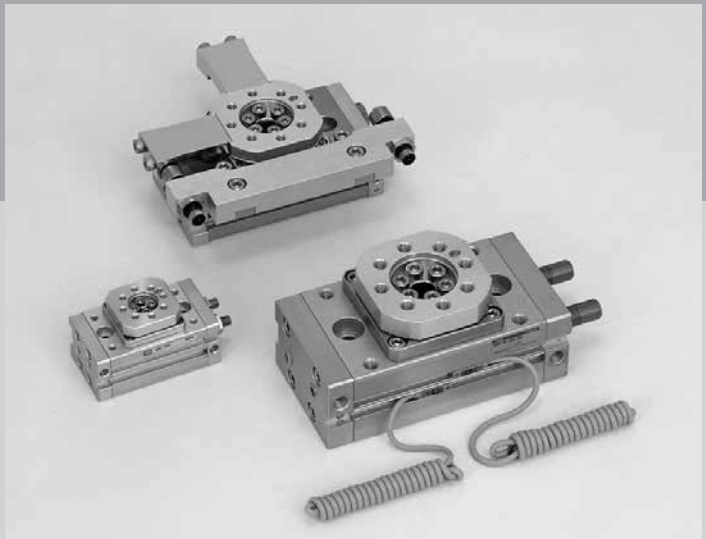

CONTENTS

Product introduction	1298
Series variation	1300
● Basic (GRC)	1302
● High accuracy (GRC-K)	1302
● Fine speed (GRC-F)	1316
● High accuracy/fine speed (GRC-KF)	1316
Selection guide	1318
Technical data	1324
⚠ Safety precautions	1331

The cylinder switches T2YH, T2YV, T3YH, and T3YV are scheduled for end of production at the end of December 2023.

High load/high accuracy positioning.

The table rotary actuator GRC series realizes high load, direct mounting and high position accuracy thanks to a bearing guide.

1 Excellent flexibility in design

New industry-first GRC-5 Torque 5 (0.5 N·m) compact.

Unprecedented miniature size
5/10/20/30/50/80 sizes available.

Standard and high accuracy are available with the same dimensions.

Model changes for lines (standard or high accuracy) can be conducted quickly.

Basic **GRC**	High accuracy **GRC-K**
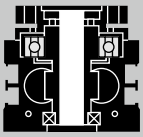	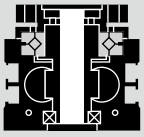
Stable operation with radial bearing	Cross roller bearing used for high accuracy/high load

90° and 180° specifications are available.

A more compact form can be achieved by selecting a 90° oscillation angle.

GRC Series variation

	Basic GRC	High accuracy GRC-K
With switch	●	●
Size (torque value at 0.5 MPa)		
5 (0.5 N·m)	●	—
10 (1.0 N·m)	●	●
20 (2.0 N·m)	●	●
30 (3.0 N·m)	●	●
50 (5.2 N·m)	●	●
80 (8.1 N·m)	●	●
Oscillating angle		
90°	●	●
180°	●	●
Option		
Shock absorber stopper	●	●

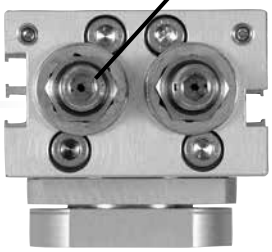

Comes with an angle adjustment bolt with rubber cushion for adjusting the oscillation angle.

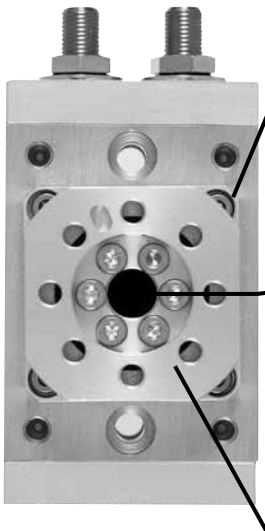

Rotary table with directly mountable load

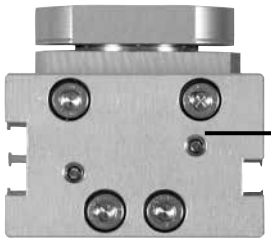

Rack and pinion

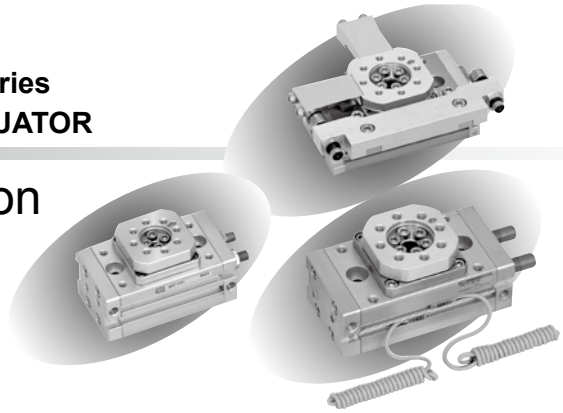

2 Superior installability

Select among 3 surfaces for piping port leadout directions.

Large hollow diameter keeps piping and wiring simple.

Hollow hole diameters of ø4 to ø17 are available.

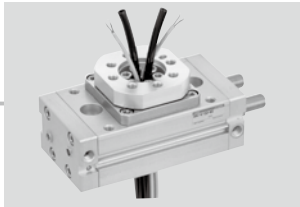

Positioning spigots for the table top (4 positions) and the body bottom (1 position) are available.

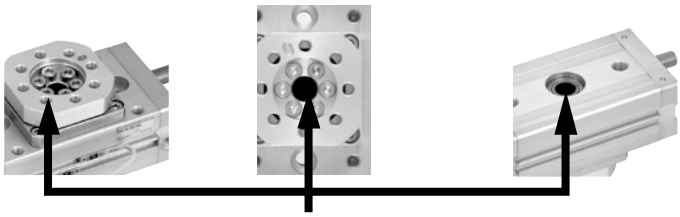

3 Superior operability

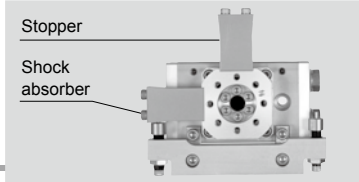

Stable operation with external stopper

Smooth stopping is possible without backlash due to the external stopper and shock absorber (optional).

1.5 s/90° low speed operation

The large pinion diameter and long piston stroke length achieve low speed operation.

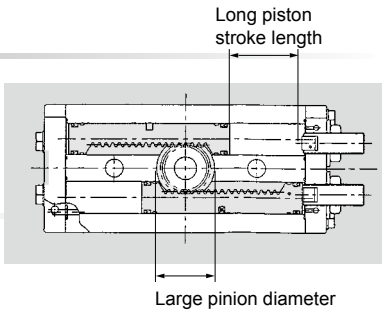

Applications

Cassette reversing

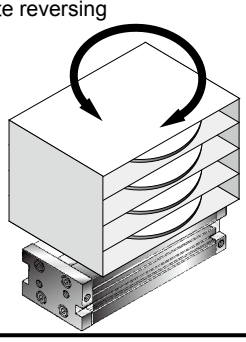

Hand reverse

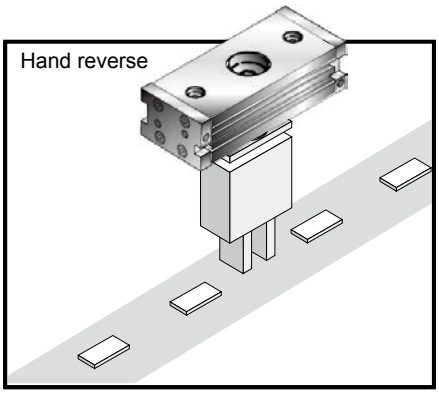

Part feed

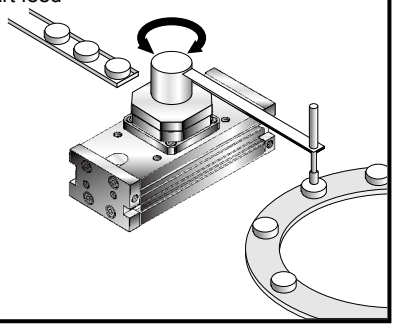

Table rotary actuator GRC Series

Variation	Model No. JIS symbol	Size				
		5	10	20	30	
Basic	GRC	●	●	●	●	
High accuracy	GRC-K		●	●	●	
Fine speed	GRC-F	●	●	●	●	
High accuracy/fine speed	GRC-KF		●	●	●	

●: Standard, ◎: Option, : Not available

			Max. oscillating angle (°)		Option			Switch	Page
					With external shock absorber (1)	With external shock absorber (2)	External shock absorber retrofit mounting groove machined		
	50	80	90	180	A1	A2	A3		
	●	●	●	●	◎	◎	◎	◎	1302
	●	●	●	●	◎	◎	◎	◎	1302
	●	●	●	●	◎	◎	◎	◎	1316
	●	●	●	●	◎	◎	◎	◎	1316

Note: Refer to page 1310 for external shock absorber.

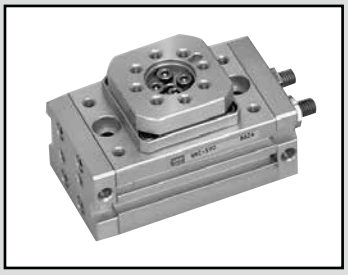

Table rotary actuator
Basic/high accuracy

GRC/GRC-K Series

● Size: 5/10/20/30/50/80

JIS symbol

Specifications

1 MPa ≈ 145.0 psi, 1 MPa = 10 bar

Item			GRC-5	GRC-10 GRC-K-10	GRC-20 GRC-K-20	GRC-30 GRC-K-30	GRC-50 GRC-K-50	GRC-80 GRC-K-80
Size			5	10	20	30	50	80
Theoretical torque *1		N·m	0.5	1.0	2.0	3.0	5.2	8.1
Actuation			Rack and pinion mechanism					
Working fluid			Compressed air					
Max. working pressure		MPa	1.0 (≈150 psi, 10 bar)					
Min. working pressure *2 MPa	Basic		0.10 (≈15 psi, 1 bar)					
	High accuracy		-	0.15 (≈22 psi, 1.5 bar)		0.10 (≈15 psi, 1 bar)		
	With external shock absorber		0.25	0.20	0.15 (≈22 psi, 1.5 bar)			
Proof pressure		MPa	1.6 (≈230 psi, 16 bar)					
Ambient temperature		°C	0 (32°F) to 60 (140°F) (no freezing)					
Port size			M5				Rc1/8	
Cushion	Basic/high accuracy		Rubber cushion					
	With external shock absorber		Shock absorber					
	Shock absorber model No.		NCK-0.3		NCK-0.7		NCK-1.2	NCK-2.6
Allowable absorbed energy J	Basic/high accuracy		0.005	0.008	0.03		0.04	0.11
	With external shock absorber *7		0.46	0.59	1.15	1.71	2.33	2.78
Shock absorber stroke length		mm	3.5	3.5	5	5	5.5	6.5
Lubrication			Not required (use turbine oil ISO VG32 if necessary for lubrication)					
Volumetric capacity *3		cm³ 90°	1.3	3.5	7.0	10.5	18.1	28.3
		180°	3.4	6.6	13.4	20.0	34.4	53.7
Oscillating angle adjusting range *4	Basic/high accuracy	90°	0° to 100°					
		180°	90° to 190°					
	With external shock absorber	90°	90° ± 6°					
		180°	180° ± 6°					
Oscillating time adjusting range *5 *8		s/90°	0.2 to 1.5					
Table deflection (reference value) *6		Basic	±0.17°			±0.23°	±0.26°	±0.32°
		High accuracy	-	±0.026°				

*1 : The theoretical torque is value at working pressure 0.5 MPa.
*2 : To push through the rubber cushion integrated in basic and high accuracy, 0.3 MPa and over working pressure is required.
*3 : Volumetric capacity is value within oscillating angle adjusting range when max. oscillating angle.
*4 : Oscillating angle adjusting range is value when adjusted by both side stopper bolts (shock absorber).
*5 : Oscillating time adjusting range is value at working pressure 0.5 MPa.
*6 : Displacement of table at 100 mm away from the center of rotation is shown in technical data (page 1327).
*7 : The values in the table indicate the absorbed energy at the maximum oscillation speed. The absorbed energy varies depending on the oscillation speed. Refer to the graph of "Absorbed energy and oscillating time" on page 1324 for details.
*8 : For the type with shock absorber, the time until the unit hits the end of shock absorber (end of rod). (Not the oscillating time until the unit reaches the stroke end of the shock absorber.)

Switch specifications

● 1-color/2-color display

Item	Proximity 2-wire				Proximity 3-wire			
	T1H/T1V	T2H/T2V	T2YH/T2YV	T2WH/T2WV	T3H/T3V	T3PH/T3PV	T3YH/T3YV	T3WH/T3WV
Applications	For programmable controller, relay, compact solenoid valve	Dedicated for programmable controller			For programmable controller, relay			
Output method	-				NPN output	PNP output	NPN output	
Pwr. supp. V.	-				10 to 28 VDC			
Load voltage	85 to 265 VAC	10 to 30 VDC		24 VDC ±10%	30 VDC or less			
Load current	5 to 100 mA	5 to 20 mA (*3)			100 mA or less		50 mA or less	
Indicator lamp	LED (Lit when ON)	LED (Lit when ON)	Red/green LED (Lit when ON)	Red/green LED (Lit when ON)	LED (Lit when ON)	Yellow LED (Lit when ON)	Red/green LED (Lit when ON)	
Leakage current	1 mA or less at 100 VAC 2 mA or less at 200 VAC	1 mA or less			10 μA or less			
Weight g	1 m: 33 3 m: 87 5 m:142	1 m:18 3 m:49 5 m:80	1 m: 33 3 m: 87 5 m:142	1 m:18 3 m:49 5 m:80	1 m:18 3 m:49 5 m:80		1 m: 33 3 m: 87 5 m:142	1 m:18 3 m:49 5 m:80

*1 : Refer to Ending Page 1 for detailed switch specifications and dimensions.
*2 : Switches other than the above models, such as switches with connectors, are also available. Refer to Ending Page 1.
*3 : The max. load current is 20 mA at 25°C. The current is lower than 20 mA if the operating ambient temperature around the switch is higher than 25˚C. (5 to 10 mA at 60°C)

Min. oscillating angle with switch

Size	5	10	20	30	50	80
T type proximity 2-color display	20°	15°	17.5°	12.5°	12.5°	12.5°

Theoretical torque table

(Unit: N·m)

Size	Working pressure (MPa)									
	0.1	0.2	0.3	0.4	0.5	0.6	0.7	0.8	0.9	1.0
5	-	0.2	0.3	0.4	0.5	0.6	0.7	0.8	0.9	1.0
10	-	0.4	0.6	0.8	1.0	1.2	1.4	1.6	1.8	2.0
20	-	0.8	1.2	1.6	2.0	2.4	2.8	3.2	3.6	4.0
30	0.6	1.2	1.8	2.4	3.0	3.6	4.2	4.8	5.4	6.0
50	1.0	2.1	3.1	4.1	5.2	6.2	7.3	8.3	9.3	10.4
80	1.6	3.2	4.9	6.5	8.1	9.7	11.3	13.0	14.6	16.2

Product weight

(Unit: kg)

Oscillating angle / Model No.	90°		180°		Outer mount shock absorber weight	Switch weight (per switch)
	Basic	High accuracy	Basic	High accuracy		
GRC- 5	0.39	-	0.43	-	0.20	0.02
GRC-10	0.48	0.50	0.56	0.58	0.30	
GRC-20	0.78	0.80	0.88	0.90	0.40	
GRC-30	1.05	1.30	1.25	1.50	0.50	
GRC-50	1.80	2.10	2.10	2.40	0.60	
GRC-80	2.30	2.60	2.70	3.00	0.70	

Clean-room specifications

(Catalog No. CB-033SA)

● Anti-dust generation structure for use in cleanrooms

GRC - ····· - P73
GRC - ····· - P53
GRC-K - ····· - P73
GRC-K - ····· - P53

Specifications for rechargeable battery

(Catalog No. CC-1226A)

● Design compatible with rechargeable battery manufacturing process.

GRC - ··· - P4*

LCM
LCR
LCG
LCW
LCX
STM
STG
STS/STL
STR2
UCA2
ULK*
JSK/M2
JSG
JSC3/JSC4
USSD
UFCD
USC
UB
JSB3
LMB
LML
HCM
HCA
LBC
CAC4
UCAC2
CAC-N
UCAC-N
RCS2
RCC2
PCC
SHC
MCP
GLC
MFC
BBS
RRC
GRC
RV3*
NHS
HRL
LN
Hand
Chuk
MecHnd/Chuk
ShkAbs
FJ
FK
SpdContr
Ending

How to order

● Without switch (built-in magnet for switch)

GRC - 10 ( ) - 90 ——— A1

● With switch (built-in magnet for switch)

GRC - 30 ( ) - 180 - T2H* - R - A2

Ⓐ Model No.
Ⓑ Size
Ⓒ Port thread
Ⓓ Oscillating angle
Ⓔ Switch model No.
Ⓕ Switch quantity
Ⓖ Option

Code	Description
Ⓐ Model No.	
GRC	Basic
GRC-K	High accuracy

Ⓑ Size (0.5 MPa)

Model No.	Theoretical torque	GRC	GRC-K
5	0.5 [N·m]	●	-
10	1.0 [N·m]	●	●
20	2.0 [N·m]	●	●
30	3.0 [N·m]	●	●
50	5.2 [N·m]	●	●
80	8.1 [N·m]	●	●

Ⓒ Port thread	
Blank	Rc thread
NN	NPT thread (ø50 and over) (made-to-order product)
GN	G thread (ø50 and over) (made-to-order product)

Ⓓ Oscillating angle	
90	90°
180	180°

Ⓔ Switch model No.

Axial lead wire	Radial lead wire	Contact	Voltage AC	Voltage DC	Display	Lead wire
T1H*	**T1V***	Proximity	●		1-color display	2-wire
T2H*	**T2V***	Proximity		●	1-color display	2-wire
T3H*	**T3V***	Proximity		●	1-color display	3-wire
T3PH*	**T3PV***	Proximity		●	1-color display	3-wire
T2WH*	**T2WV***	Proximity		●	2-color display	2-wire
T2YH*	**T2YV***	Proximity		●	2-color display	2-wire
T3WH*	**T3WV***	Proximity		●	2-color display	3-wire
T3YH*	**T3YV***	Proximity		●	2-color display	3-wire

*** Lead wire length**	
Blank	1 m (standard)
3	3 m (option)
5	5 m (option)

Ⓕ Switch quantity	
R	With clockwise rotation detection 1 piece
L	With counterclockwise rotation detection 1 piece
D	2

Ⓖ Option	
Blank	Hexagon socket set screw stopper screw with urethane
A With outer mount shock absorber	
A1	Installation position (1)
A2	Installation position (2)
A3	External shock absorber retrofitting (Installation groove machined)

⚠ Precautions for model No. selection

*1 : Port position of basic/high accuracy is provided on the side surface. Other ports are plugged.
*2 : The external shock absorber cannot be retrofitted onto the basic/high accuracy. Select the A3 type as an option if retrofitting.
*3 : If an external shock absorber is retrofit on the A3 type, the features will be the same as the A1 type. Consult CKD for A2 type.

[Example of model No.]

GRC-10-180-T2V-D-A1

Double acting

Ⓐ Model No. : Basic
Ⓑ Size : 10
Ⓒ Port thread : Rc thread
Ⓓ Oscillating angle : 180°
Ⓔ Switch model No. : Proximity/2-wire radial lead wire/lead wire 1 m
Ⓕ Switch quantity : 2
Ⓖ Option : External shock absorber mounting position (1)

Outer mount shock absorber installation drawing

GRC-*-A1 (Installation position (1))

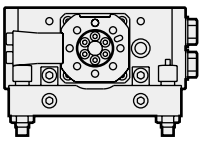

GRC-*-A2 (Installation position (2))

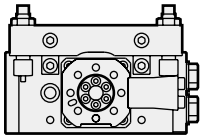

GRC-*-A3 (Installation position (3))

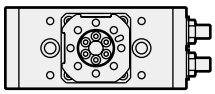

Clean-room specifications

(Catalog No. CB-033SA)

● Anti-dust generation structure for use in cleanrooms

GRC - ····· - P73 GRC-K - ····· - P73

GRC - ····· - P53 GRC-K - ····· - P53

Specifications for rechargeable battery

(Catalog No. CC-1226A)

● Design compatible with rechargeable battery manufacturing process.

GRC - ··· - P4*

LCM
LCR
LCG
LCW
LCX
STM
STG
STS/STL
STR2
UCA2
ULK*
JSK/M2
JSG
JSC3/JSC4
USSD
UFCD
USC
UB
JSB3
LMB
LML
HCM
HCA
LBC
CAC4
UCAC2
CAC-N
UCAC-N
RCS2
RCC2
PCC
SHC
MCP
GLC
MFC
BBS
RRC
GRC
RV3*
NHS
HRL
LN
Hand
Chuk
MecHnd/Chuk
ShkAbs
FJ
FK
SpdContr
Ending

How to order switch

● Switch body only

SW - T2H3

Switch model No.
(Item Ⓔ on the previous page)

How to order repair parts kit

● Set of repair parts (packing, etc.)

GRC - 5 K

Size
(Item Ⓑ on the previous page)

How to order external shock absorber set

● Sets of plate, shock absorber and lever
● Used when retrofitting external shock absorber onto A3 type

GRC - 5 - A 2

Size

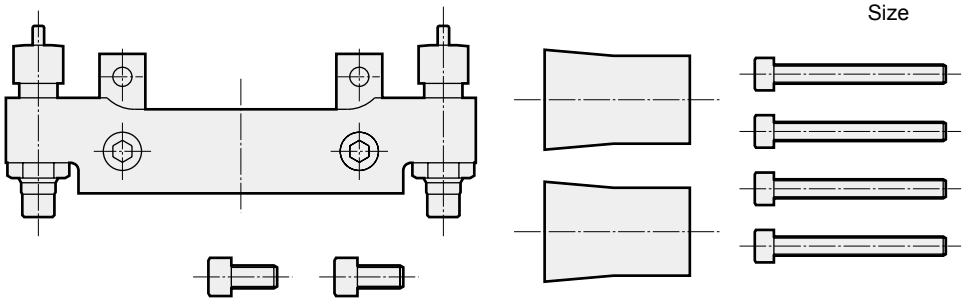

Ⓓ Oscillating angle	
1	For 90° specifications
2	For 180° specifications

Select 1 or 2 for Ⓓ
Note: Set contents differ between 90° specifications and 180° specifications. The figure shows 90° specifications.

How to order stopper bolt set for adjustable angle

● Sets of hexagon socket set screw with urethane hexagon nut and plain washer
● Used with external shock absorber removed

GRC - 5 S

Size
(Item Ⓑ on the previous page)

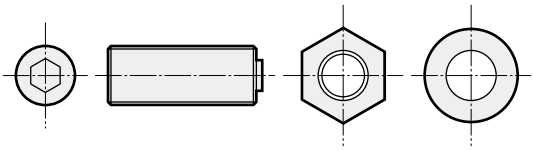

Size	Weight g
5	4
10	7
20	14
30	19
50	32
80	

How to order seal washer set

● Used at seal washer replacement
● Seal washer 2 pcs.

GRC - 5 D

Size
(Item Ⓑ on the previous page)

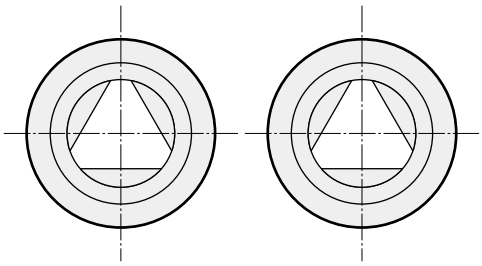

Size	Weight g
5	2
10	4
20	
30	
50	8
80	

How to order shock absorber set for adjustable angle

● Sets of shock absorber and stopper

GRC - 5 - A01

Size
(Item Ⓑ on the previous page)

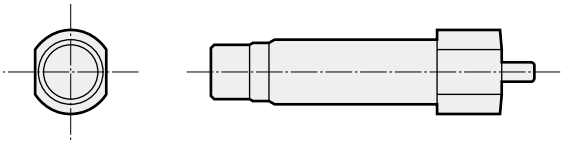

Applicable shock absorber model No.

Model	Shock absorber model No.	Weight g
GRC-5	NCK-00-0.3	12
GRC-10	NCK-00-0.3	
GRC-20	NCK-00-0.7	20
GRC-30	NCK-00-0.7	
GRC-50	NCK-00-1.2	40
GRC-80	NCK-00-2.6	70

LCM
LCR
LCG
LCW
LCX
STM
STG
STS/STL
STR2
UCA2
ULK*
JSK/M2
JSG
JSC3/JSC4
USSD
UFCD
USC
UB
JSB3
LMB
LML
HCM
HCA
LBC
CAC4
UCAC2
CAC-N
UCAC-N
RCS2
RCC2
PCC
SHC
MCP
GLC
MFC
BBS
RRC
GRC
RV3*
NHS
HRL
LN
Hand
Chuk
MecHnd/Chuk
ShkAbs
FJ
FK
SpdContr
Ending

Internal structure and parts list

- GRC (basic)
- GRC-K (high accuracy)

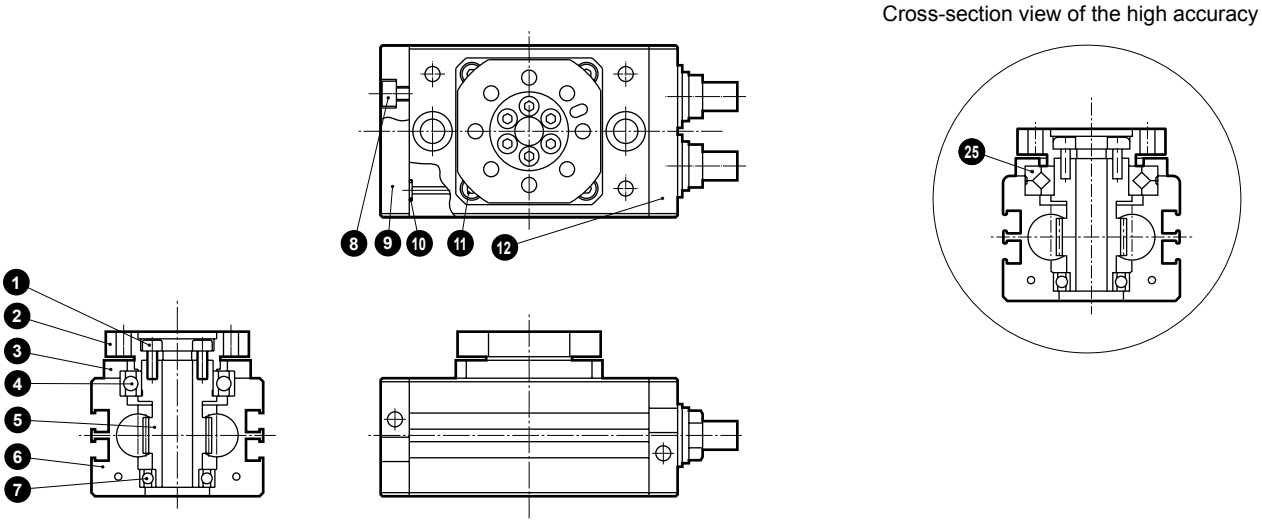

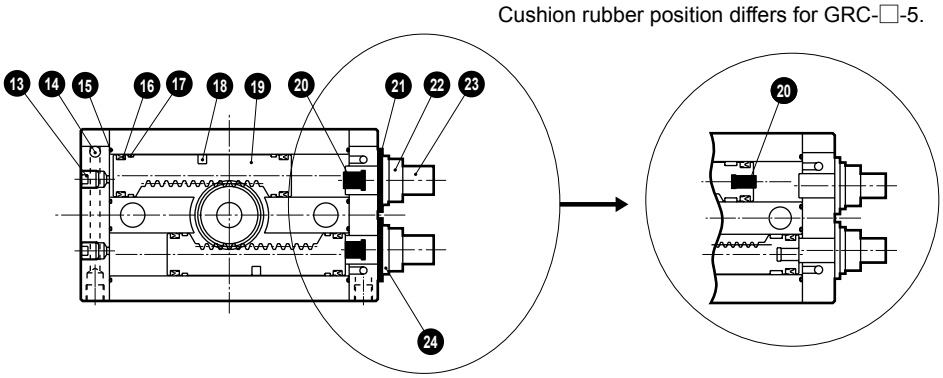

Parts list

No.	Part name	Material	Remarks	No.	Part name	Material	Remarks
1	Hexagon socket head cap screw	Stainless steel		13	Hexagon socket set screw	Stainless steel	
2	Table	Aluminum alloy	Alumite	14	Steel ball	Stainless steel	
3	Bearing cover	Aluminum alloy (hi accuracy uses SS)	Alumite	15	Cylinder gasket	Nitrile rubber	
4	Ball bearing (1)	Alloy steel		16	Piston packing	Nitrile rubber	
5	Shaft	Alloy steel		17	Wear ring	Acetal resin	
6	Cylinder body	Aluminum alloy	Hard alumite	18	Magnet	Plastic (5.10 is special alloy.)	
7	Ball bearing (2)	Alloy steel		19	Piston	Stainless steel	
8	Hexagon socket head cap screw	Stainless steel		20	Cushion rubber	Urethane rubber	
9	Head cover (1)	Aluminum alloy	Alumite	21	Seal washer	Steel + nitrile rubber	Zinc plated
10	Gasket	Nitrile rubber		22	Hexagon nut	Steel	Nickeling
11	Hexagon socket head cap screw	Stainless steel		23	Stopper bolt	Alloy steel	Nickeling
12	Head cover (2)	Aluminum alloy	Alumite	24	Plain washer	Stainless steel	
				25	Cross roller bearing	Alloy steel	

Internal structure and parts list

● GRC-□-A (with external shock absorber)
Note: The figure shows 90° specifications. 180° specifications use the same material, etc.

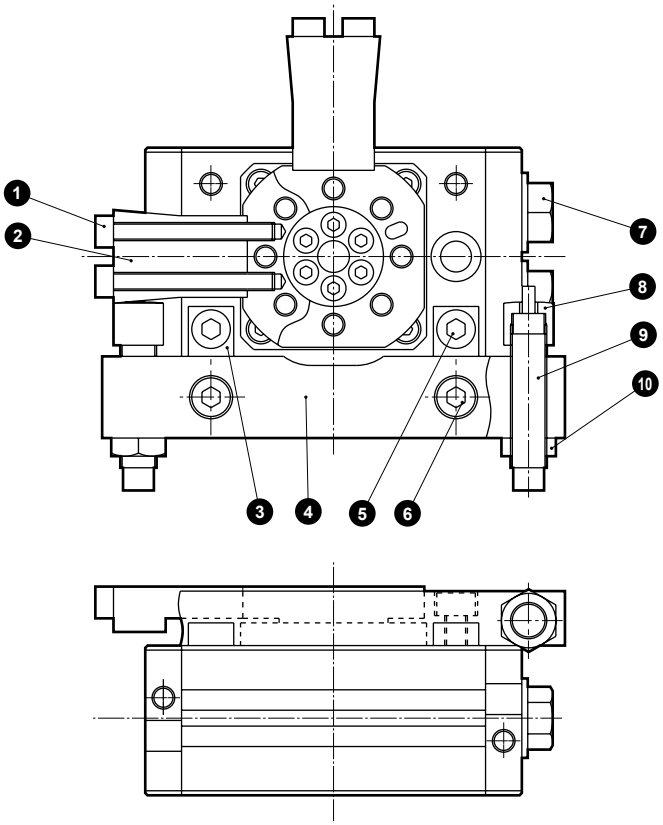

Parts list

No.	Part name	Material	Remarks
1	Hexagon socket head cap screw	Stainless steel	
2	Lever	Carbon steel or alloy steel	Nickel/phosphorous plating
3	Connector	Steel	Nickeling
4	Plate	Aluminum alloy	Alumite
5	Hexagon socket head cap screw	Stainless steel	
6	Hexagon socket head cap screw	Stainless steel	
7	Hexagon head bolt	Stainless steel	
8	Stopper	Stainless steel	
9	Shock absorber		
10	Hexagon nut	Steel	Nickeling

Repair parts kit

Kit No.	Repair parts No.
GRC-5K	⑩ ⑮ ⑯ ⑰ ㉑
GRC-10K	
GRC-20K	
GRC-30K	
GRC-50K	
GRC-80K	

*1: Specify the kit No. when ordering repair parts.
*2: Avoid disassembly/repair, since high accuracy uses highly controlled precision parts.
When repairing high accuracy, consult with CKD.

LCM
LCR
LCG
LCW
LCX
STM
STG
STS/STL
STR2
UCA2
ULK*
JSK/M2
JSG
JSC3/JSC4
USSD
UFCD
USC
UB
JSB3
LMB
LML
HCM
HCA
LBC
CAC4
UCAC2
CAC-N
UCAC-N
RCS2
RCC2
PCC
SHC
MCP
GLC
MFC
BBS
RRC
GRC
RV3*
NHS
HRL
LN
Hand
Chuk
MecHnd/Chuk
ShkAbs
FJ
FK
SpdContr
Ending

Dimensions CAD

- GRC basic
- GRC-K high accuracy

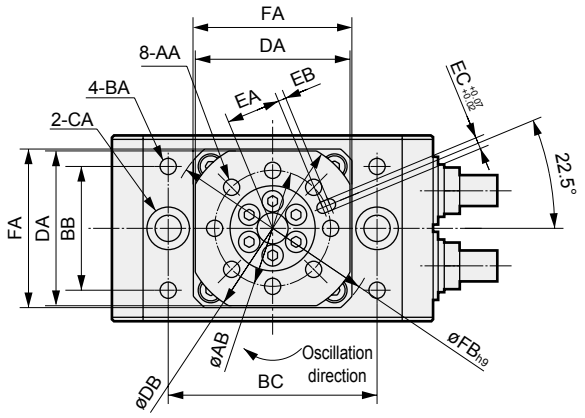

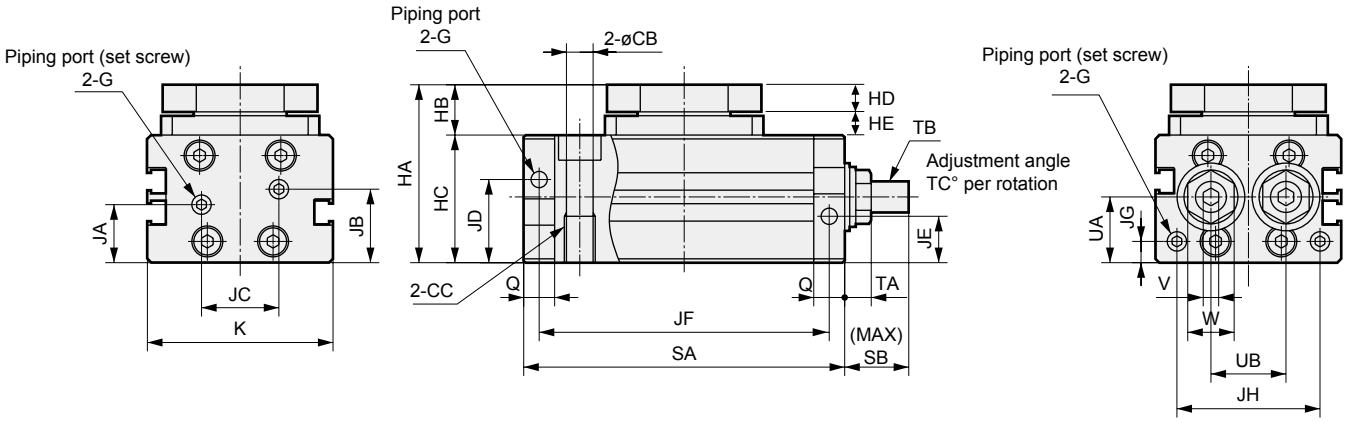

Size	AA	AB	BA	BB	BC	CA	CB	CC	DA	DB	EA	EB	EC	FA	FB	G	HA	HB
5	M4 depth 7	24	M4 depth 6.5	26	48	Spot face ø9.5 depth 5.4	5.2	M6 depth 12	35	42	11	2	3 depth 3.5	36	48	M5	43	13
10	M5 depth 7	30	M5 depth 7	32	54	Spot face ø11 depth 6.5	6.6	M8 depth 12	40	46	14	2	3 depth 3.5	41	54	M5	46	13
20	M6 depth 9	36	M6 depth 8	42	62	Spot face ø11 depth 6.5	6.9	M8 depth 12	47	55	17	2	4 depth 4.5	48	64	M5	53	16
30	M6 depth 9	44	M6 depth 8	52	74	Spot face ø14 depth 8.6	8.7	M10 depth 15	58	67	21	2	4 depth 4.5	59	78	M5	55	18
50	M8 depth 13	50	M8 depth 12	60	88	Spot face ø17.5 depth 10.8	10.5	M12 depth 18	66	74	24	2	5 depth 5.5	69	92	Rc1/8	71	23
80	M8 depth 13	54	M8 depth 12	66	94	Spot face ø17.5 depth 10.8	10.5	M12 depth 18	69	80	26	2	5 depth 5.5	76	101	Rc1/8	80	25

Size	SA		SB	TA	TB	TC	UA	UB	V	W	X	LD		RD	
	90°	180°										90°	180°	90°	180°
5	73	90	14	6.5	M6×1	8.7	16.6	16	3	10	12.6	21.5	25.5	22.5	25.5
10	83	107	15	4.9	M8×0.75	4.9	17.1	19.4	4	11	13.1	24.5	30.5	26	30.5
20	96	125	17	6.1	M10×1	5.7	17.6	24	5	13	13.6	31	37.5	31	37.5
30	121	165	25	6.1	M10×1	3.8	17.6	34	5	13	13.6	38.5	49.5	40	49.5
50	144	192	29.5	7	M12×1	3.5	24.6	35	6	14	20.6	48.5	61	51	61
80	150	198	29.5	7	M12×1	3.5	27.1	36	6	14	23.1	51.5	64	54	64

LCM
LCR
LCG
LCW
LCX
STM
STG
STS/STL
STR2
UCA2
ULK*
JSK/M2
JSG
JSC3/JSC4
USSD
UFCD
USC
UB
JSB3
LMB
LML
HCM
HCA
LBC
CAC4
UCAC2
CAC-N
UCAC-N
RCS2
RCC2
PCC
SHC
MCP
GLC
MFC
BBS
RRC
GRC
RV3*
NHS
HRL
LN
Hand
Chuk
MecHnd/Chuk
ShkAbs
FJ
FK
SpdContr
Ending

GRC-5

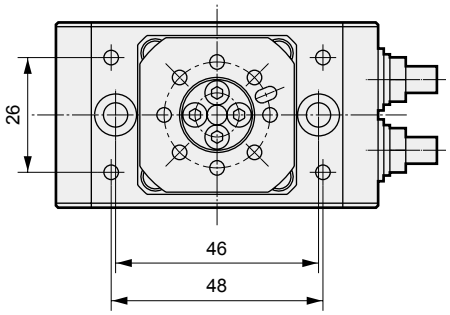

Position of 4-BA and 2-CA differ for GRC-5 only.

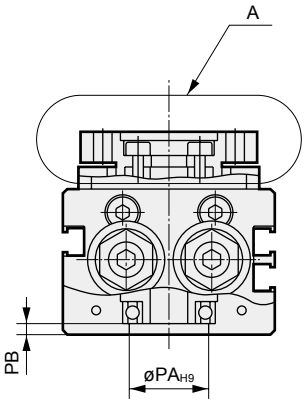

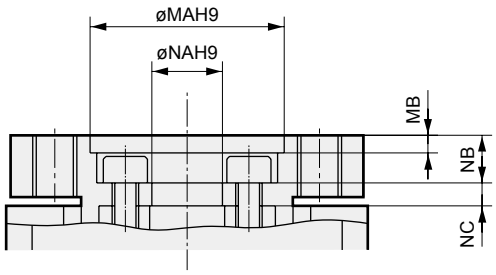

A section details

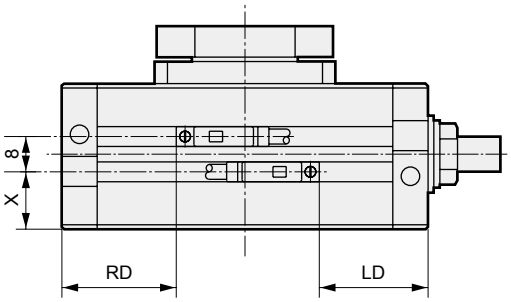

Switch mounting position

HC	HD	HE	JA	JB	JC	JD	JE	JF 90°	JF 180°	JG	JH	K	MA	MB	NA	NB	NC	PA	PB	Q
30	7	6	15	18	16	21	11.5	65	82	5.6	29	42	17	2	4	5.5	2.4	12	3.5	8
33	7	6	15	19	20	21.5	12	75	99	5.6	37	48	22	2	8	5.5	2.4	18	2.5	8
37	9	7	14.5	20.5	27	22	13	86	115	5.6	47	58	27	2	11	6.5	3.9	20	2.5	10
37	9	9	14.5	20.5	37	22	13	111	155	5.6	57	68	32	2	13	7.5	2.9	26	2.5	10
48	13	10	21.5	27.5	36	32.5	17.5	129	177	8.1	58	75	37	4	14	10.5	5.3	28	4.5	15
55	13	12	24	30	40	35	19	135	183	8.1	58	80	40	3	17	9.5	4.4	36	3.5	15

LCM
LCR
LCG
LCW
LCX
STM
STG
STS/STL
STR2
UCA2
ULK*
JSK/M2
JSG
JSC3/JSC4
USSD
UFCD
USC
UB
JSB3
LMB
LML
HCM
HCA
LBC
CAC4
UCAC2
CAC-N
UCAC-N
RCS2
RCC2
PCC
SHC
MCP
GLC
MFC
BBS
RRC
GRC
RV3*
NHS
HRL
LN
Hand
Chuk
MecHnd/Chuk
ShkAbs
FJ
FK
SpdContr
Ending

Dimensions: With external shock absorber size 5

● GRC-5-*-A1/A2

Note: The drawing is for A1 type (mounting position (1))

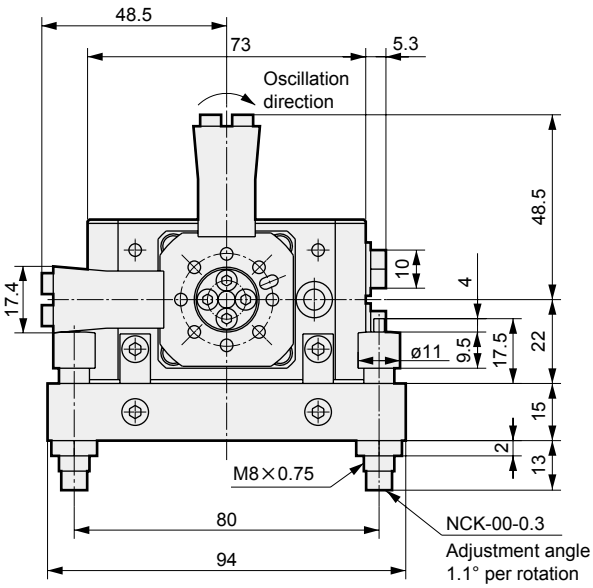

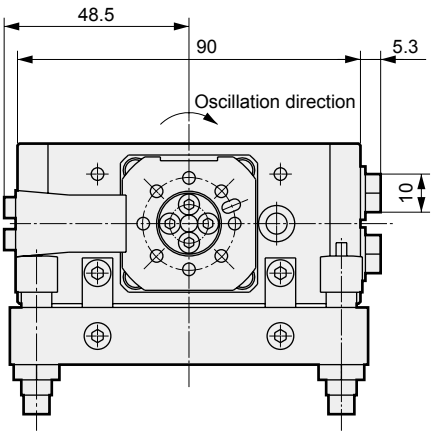

180° specifications

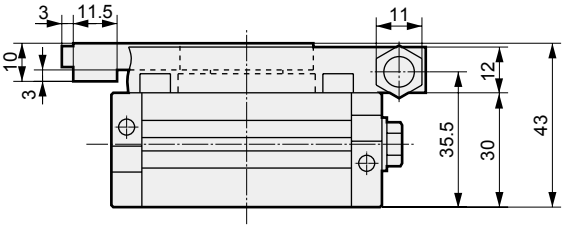

90° specifications

Note: Dimensions of rotary actuator main body are the same as the basic; however, the body cannot be fixed using the 4 screw holes on the top. As well, positioning pin hole position on tabletop differs according to external shock absorber mounting position.

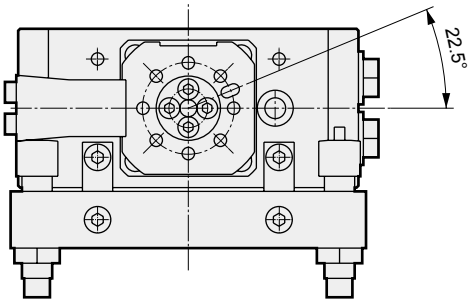

GRC-5-*-A1

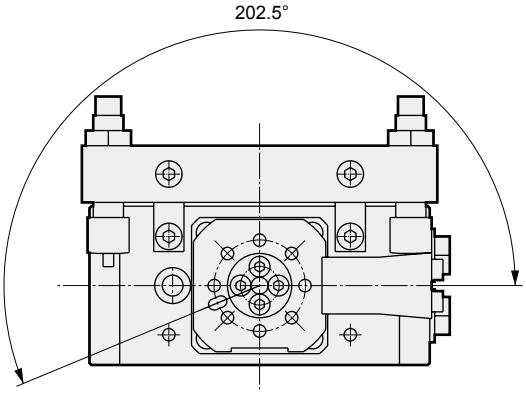

GRC-5-*-A2

Dimensions: With external shock absorber size 10, 20

● GRC-10-*-A1/A2
Note: The drawing is for A1 type (mounting position (1))

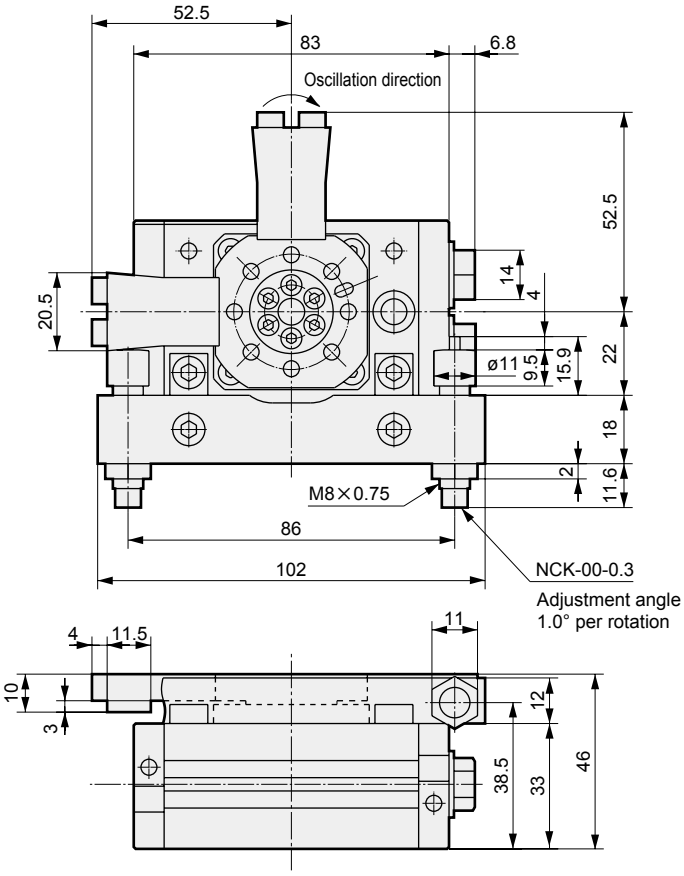

90° specifications

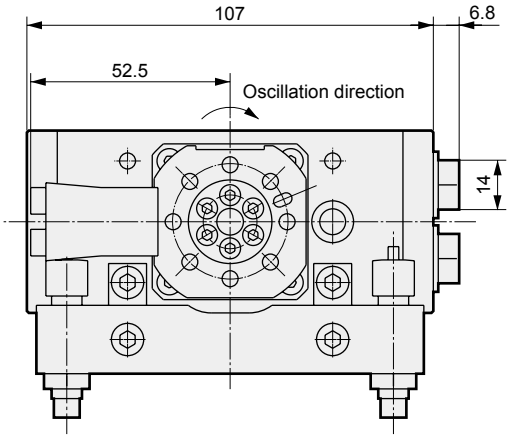

180° specifications

Note: Dimensions of rotary actuator main body are the same as the basic; however, the body cannot be fixed using the 4 screw holes on the top. As well, positioning pin hole position on tabletop differs according to external shock absorber mounting position.
(Refer to GRC-5-*-A1/A2.)

● GRC-20-*-A1/A2
Note: The drawing is for A1 type (mounting position (1))

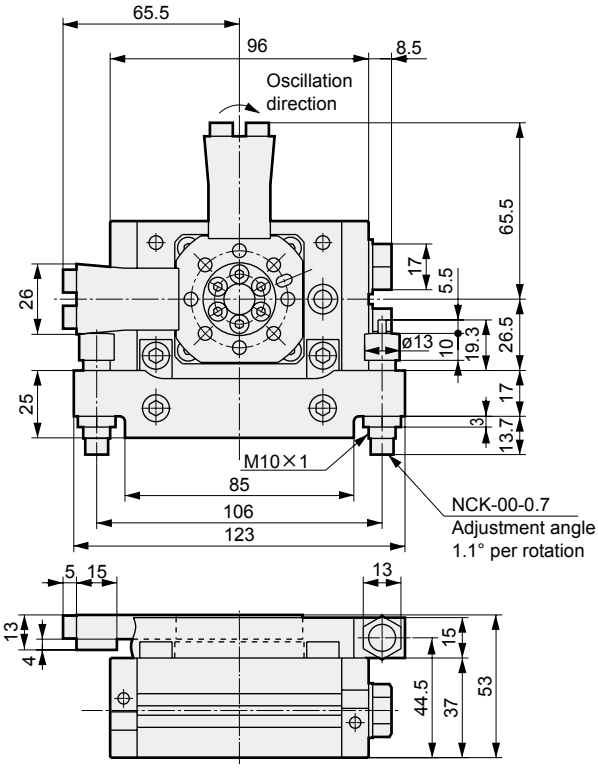

90° specifications

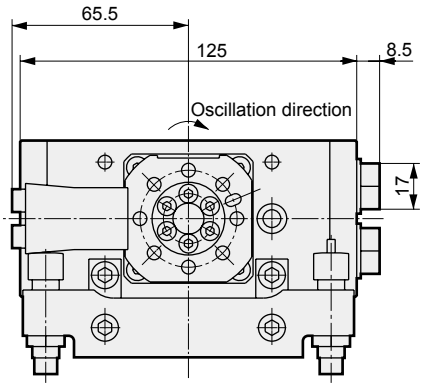

180° specifications

Note: Dimensions of rotary actuator main body are the same as the basic; however, the body cannot be fixed using the 4 screw holes on the top. As well, positioning pin hole position on tabletop differs according to external shock absorber mounting position.
(Refer to GRC-5-*-A1/A2.)

LCM
LCR
LCG
LCW
LCX
STM
STG
STS/STL
STR2
UCA2
ULK*
JSK/M2
JSG
JSC3/JSC4
USSD
UFCD
USC
UB
JSB3
LMB
LML
HCM
HCA
LBC
CAC4
UCAC2
CAC-N
UCAC-N
RCS2
RCC2
PCC
SHC
MCP
GLC
MFC
BBS
RRC
GRC
RV3*
NHS
HRL
LN
Hand
Chuk
MecHnd/Chuk
ShkAbs
FJ
FK
SpdContr
Ending

Dimensions: With external shock absorber size 30, 50

● GRC-30-*-A1/A2

Note: The drawing is for A1 type (mounting position (1))

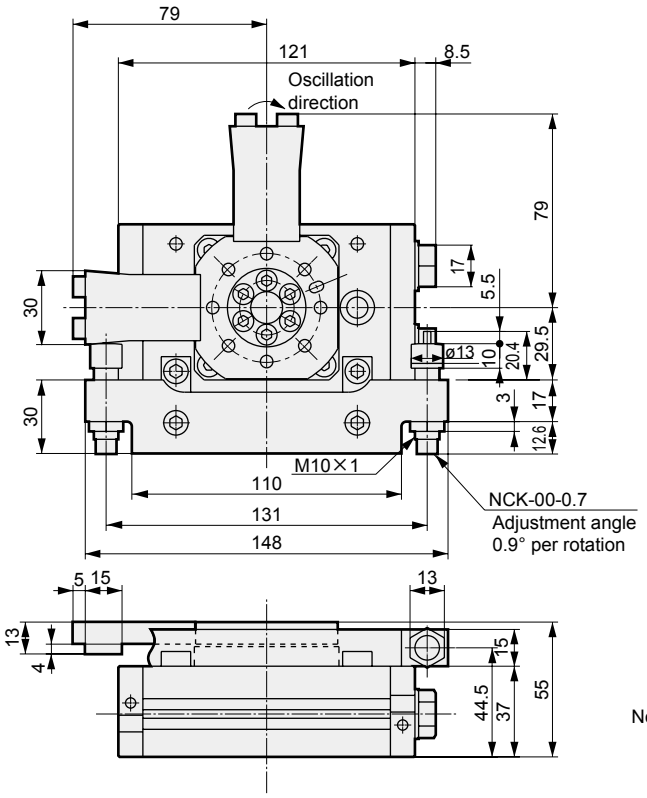

90° specifications

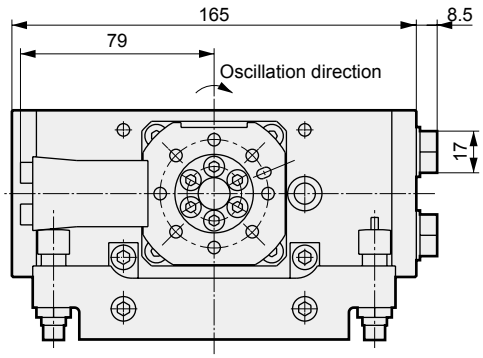

180° specifications

Note: Dimensions of rotary actuator main body are the same as the basic; however, the body cannot be fixed using the 4 screw holes on the top. As well, positioning pin hole position on tabletop differs according to external shock absorber mounting position. (Refer to GRC-5-*-A1/A2.)

● GRC-50-*-A1/A2

Note: The drawing is for A1 type (mounting position (1))

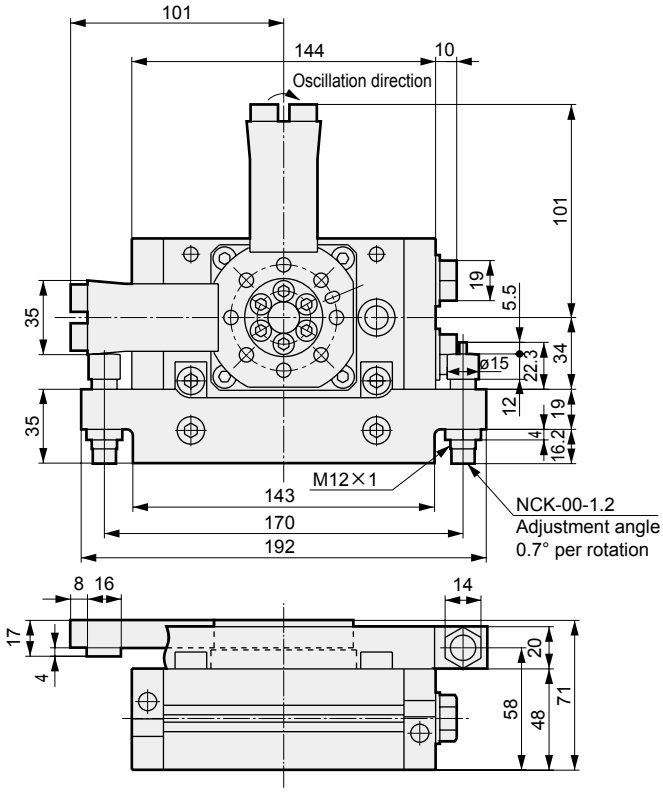

90° specifications

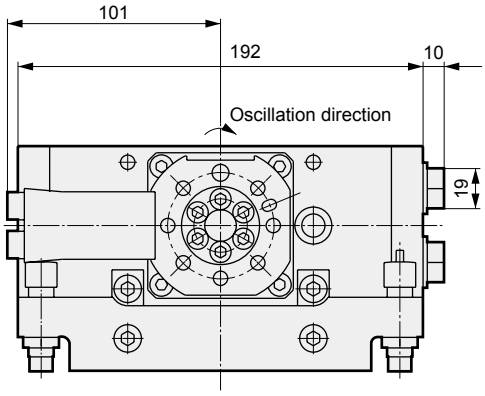

180° specifications

Note: Dimensions of rotary actuator main body are the same as the basic; however, the body cannot be fixed using the 4 screw holes on the top. As well, positioning pin hole position on tabletop differs according to external shock absorber mounting position. (Refer to GRC-5-*-A1/A2.)

Dimensions: With external shock absorber size 80

● GRC-80-*-A1/A2
Note: The drawing is for A1 type (mounting position (1))

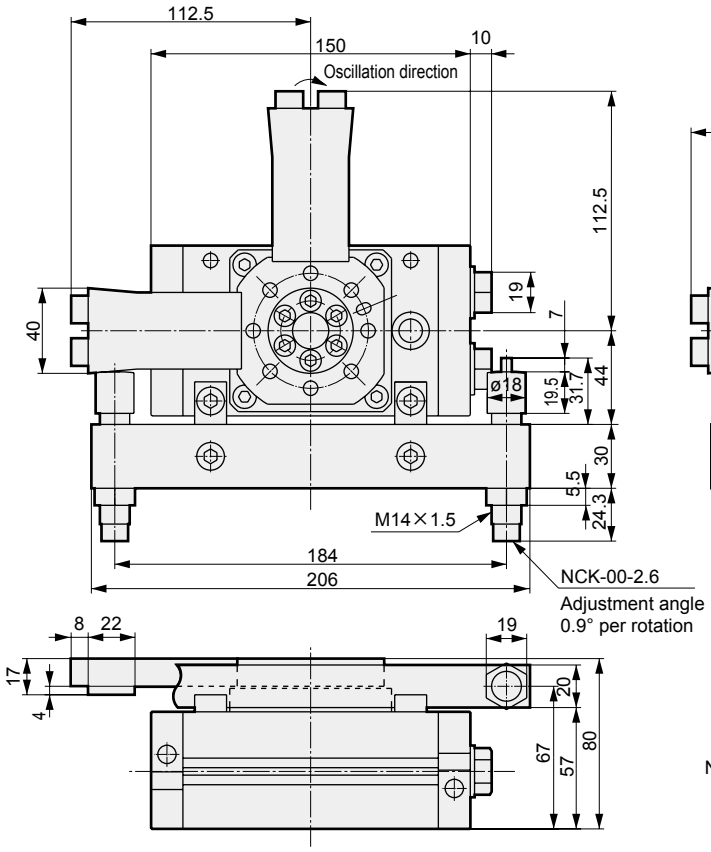

90° specifications

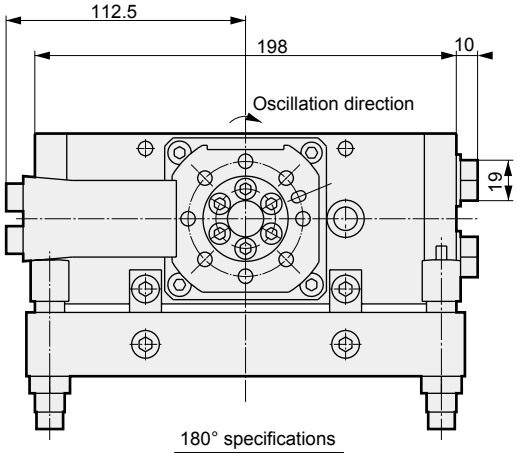

180° specifications

Note: Dimensions of rotary actuator main body are the same as the basic; however, the body cannot be fixed using the 4 screw holes on the top. As well, positioning pin hole position on tabletop differs according to external shock absorber mounting position. (Refer to GRC-5-*-A1/A2.)

LCM
LCR
LCG
LCW
LCX
STM
STG
STS/STL
STR2
UCA2
ULK*
JSK/M2
JSG
JSC3/JSC4
USSD
UFCD
USC
UB
JSB3
LMB
LML
HCM
HCA
LBC
CAC4
UCAC2
CAC-N
UCAC-N
RCS2
RCC2
PCC
SHC
MCP
GLC
MFC
BBS
RRC
GRC
RV3*
NHS
HRL
LN
Hand
Chuk
MecHnd/Chuk
ShkAbs
FJ
FK
SpdContr
Ending

Dimensions: For retrofitting of external shock absorber size 5 to 80

● GRC-*-A3

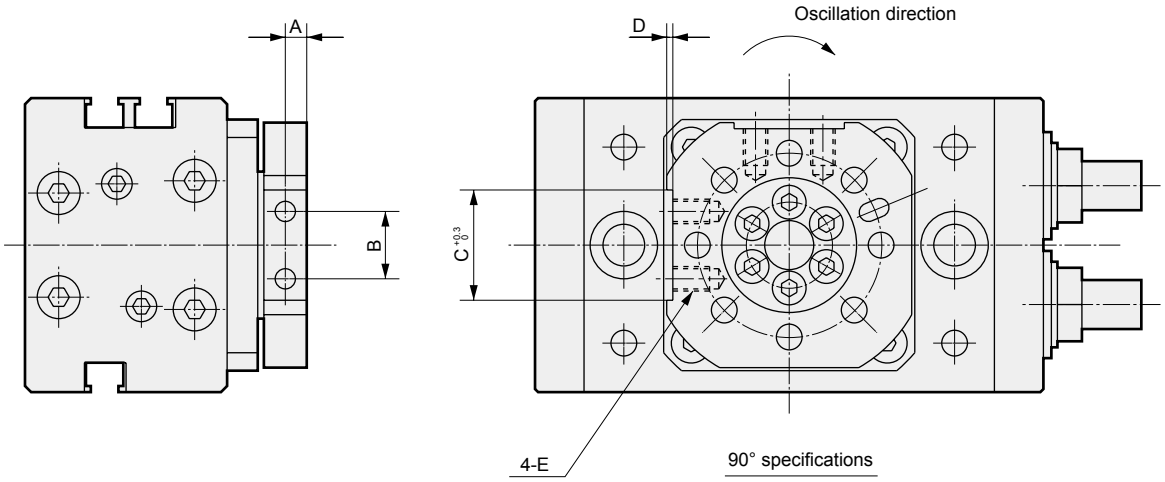

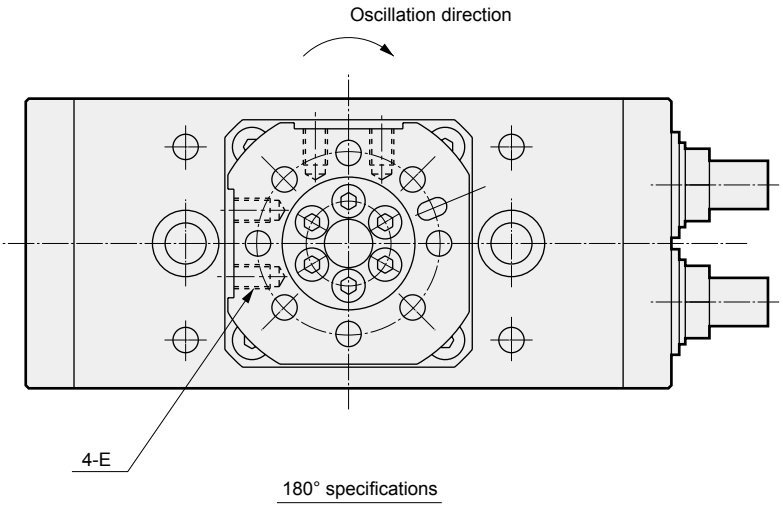

Size	A	B	C	D	E
5	3.5	8.4	15	1	M3 depth 6.5
10	3.8	11	18	1	M4 depth 6
20	4.5	13.4	23	1	M5 depth 7.5
30	4.5	17	27	2	M5 depth 8.5
50	6.9	18.4	32	2	M8 depth 9
80	6.9	20	36	2	M8 depth 9

When external shock absorber set is installed. (shows external shock absorber set.)
Note: If an external shock absorber is retrofit on the A3 type, the features will be the same as the A1 type.
Consult with CKD for A2 type. (Refer to page 1310 for mounting position)

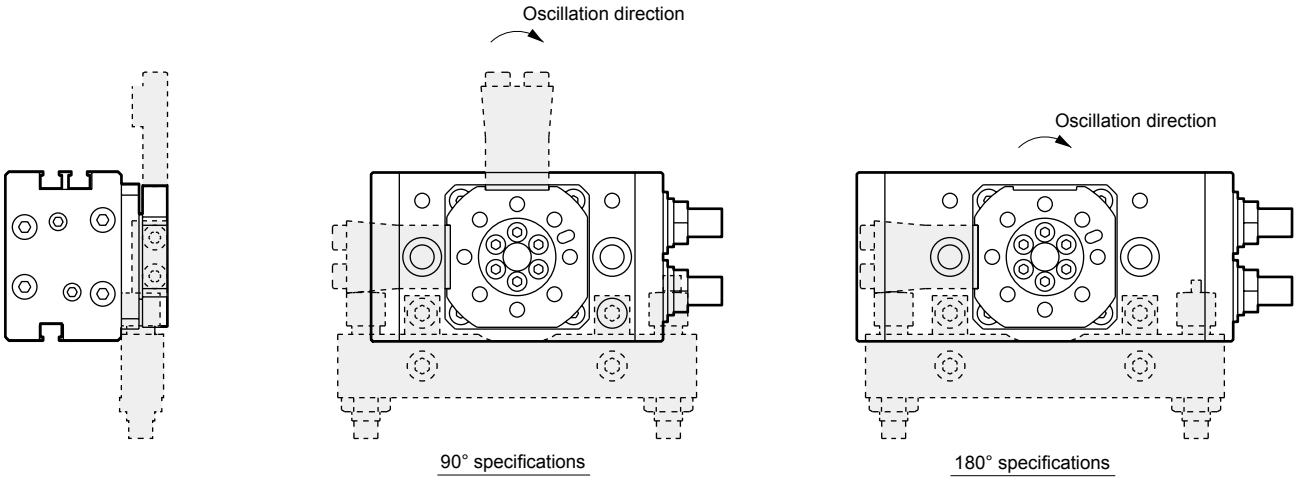

MEMO

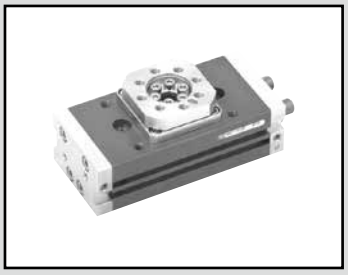

Table rotary actuator
Fine speed/high accuracy fine speed

GRC-F/GRC-KF Series

● Size: 5/10/20/30/50/80

JIS symbol

RoHS CAD

Specifications

1 MPa ≈ 145.0 psi, 1 MPa = 10 bar

Item			GRC-F-5	GRC-F-10 GRC-KF-10	GRC-F-20 GRC-KF-20	GRC-F-30 GRC-KF-30	GRC-F-50 GRC-KF-50	GRC-F-80 GRC-KF-80
Size			5	10	20	30	50	80
Theoretical torque *1		N·m	0.5	1.0	2.0	3.0	5.2	8.1
Actuation			Rack and pinion mechanism					
Working fluid			Compressed air					
Max. working pressure		MPa	1.0 (≈150 psi, 10 bar)					
Min. working pressure MPa	Basic		0.10 (≈15 psi, 1 bar)					
	High accuracy		-	0.15 (≈22 psi, 1.5 bar)		0.10 (≈15 psi, 1 bar)		
	With external shock absorber		0.25	0.20	0.15 (≈22 psi, 1.5 bar)			
Proof pressure		MPa	1.6 (≈230 psi, 16 bar)					
Ambient temperature		°C	5 (41°F) to 60 (140°F)					
Allowable absorbed energy	Basic/high accuracy	J	0.005	0.008	0.03		0.04	0.11
	With external shock absorber *3	J	0.46	0.59	1.15	1.71	2.33	2.78
Cushion	Basic/high accuracy		Rubber cushion					
	With external shock absorber		Shock absorber					
	Shock absorber model No.		NCK-0.3		NCK-0.7		NCK-1.2	NCK-2.6
Oscillating angle adjusting range *2	Basic/high accuracy	90° specifications	0° to 100°					
		180° specifications	90° to 190°					
	With external shock absorber	90° specifications	90° ±6°					
		180° specifications	180° ±6°					
Oscillating time adjusting range		S/90°	0.2 to 25					
Port size			M5				Rc1/8	
Lubrication			Lubrication not possible					

*1 : The theoretical torque is value at working pressure 0.5 MPa.
*2 : The angle adjusting range applies when adjusted with the stopper bolts (shock absorbers) on both sides.
If a shock absorber is provided, the fine speed specifications will not apply to the shock absorber section.
*3 : The values in the table indicate the absorbed energy at the maximum oscillation speed. The absorbed energy varies depending on the oscillation speed. Refer to the graph of "Absorbed energy and oscillating time" on page 1324 for details.

Switch specifications

● 1-color/2-color display

Item	Proximity 2-wire				Proximity 3-wire			
	T1H/T1V	T2H/T2V	T2YH/T2YV	T2WH/T2WV	T3H/T3V	T3PH/T3PV	T3YH/T3YV	T3WH/T3WV
Applications	For programmable controller, relay, compact solenoid valve	Dedicated for programmable controller			For programmable controller, relay			
Output method	-				NPN output	PNP output	NPN output	
Pwr. supp. V.	-				10 to 28 VDC			
Load voltage	85 to 265 VAC	10 to 30 VDC		24 VDC ±10%	30 VDC or less			
Load current	5 to 100 mA (*3)	5 to 20 mA (*3)			100 mA or less		50 mA or less	
Indicator lamp	LED (Lit when ON)	LED (Lit when ON)	Red/green LED (Lit when ON)	Red/green LED (Lit when ON)	LED (Lit when ON)	Yellow LED (Lit when ON)	Red/green LED (Lit when ON)	
Leakage current	1 mA or less at 100 VAC 2 mA or less at 200 VAC	1 mA or less			10 μA or less			
Weight g	1 m: 33 3 m: 87 5 m:142	1 m:18 3 m:49 5 m:80	1 m: 33 3 m: 87 5 m:142	1 m:18 3 m:49 5 m:80	1 m:18 3 m:49 5 m:80		1 m: 33 3 m: 87 5 m:142	1 m:18 3 m:49 5 m:80

*1 : Refer to Ending Page 1 for detailed switch specifications and dimensions.
*2 : Switches other than the above models, such as switches with connectors, are also available. Refer to Ending Page 1.
*3 : The max. load current is 20 mA at 25°C. The current is lower than 20 mA if the operating ambient temperature around the switch is higher than 25°C.
(5 to 10 mA at 60°C)

Dimensions

Dimensions are the same as the basic GRC Series or the high load GRC-K Series. Refer to pages 1308 to 1314.

LCM
LCR
LCG
LCW
LCX
STM
STG
STS/STL
STR2
UCA2
ULK*
JSK/M2
JSG
JSC3/JSC4
USSD
UFCD
USC
UB
JSB3
LMB
LML
HCM
HCA
LBC
CAC4
UCAC2
CAC-N
UCAC-N
RCS2
RCC2
PCC
SHC
MCP
GLC
MFC
BBS
RRC
GRC
RV3*
NHS
HRL
LN
Hand
Chuk
MecHnd/Chuk
ShkAbs
FJ
FK
SpdContr
Ending

How to order

● Without switch (built-in magnet for switch)

GRC-F - 10 ( ) - 90 ——— A1

● With switch (built-in magnet for switch)

GRC-F - 30 ( ) - 180 - T2H* - R - A2

Ⓐ Model No.
Ⓑ Size
Ⓒ Port thread
Ⓓ Oscillating angle
Ⓔ Switch model No.
Ⓕ Switch quantity
Ⓖ Option

Code	Description
Ⓐ Model No.	
GRC-F	Basic
GRC-KF	High accuracy

Ⓑ Size

Model No.	Theoretical torque	GRC-F	GRC-KF
5	0.5 [N·m]	●	-
10	1.0 [N·m]	●	●
20	2.0 [N·m]	●	●
30	3.0 [N·m]	●	●
50	5.2 [N·m]	●	●
80	8.1 [N·m]	●	●

Ⓒ Port thread	
Blank	Rc thread
NN	NPT thread (ø50 and over) (made-to-order product)
GN	G thread (ø50 and over) (made-to-order product)

Ⓓ Oscillating angle	
90	90°
180	180°

Ⓔ Switch model No.

Axial lead wire	Radial lead wire	Contact	Voltage AC	Voltage DC	Indicator	Lead wire
T1H*	**T1V***	Proximity	●		1-color display	2-wire
T2H*	**T2V***	Proximity		●	1-color display	2-wire
T3H*	**T3V***	Proximity		●	1-color display	3-wire
T3PH*	**T3PV***	Proximity		●	1-color display	3-wire
T2WH*	**T2WV***	Proximity		●	1-color display	2-wire
T2YH*	**T2YV***	Proximity		●	2-color display	2-wire
T3WH*	**T3WV***	Proximity		●	2-color display	3-wire
T3YH*	**T3YV***	Proximity		●	2-color display	3-wire

*** Lead wire length**	
Blank	1 m (standard)
3	3 m (option)
5	5 m (option)

Ⓕ Switch quantity	
R	With clockwise rotation detection 1 piece
L	With counterclockwise rotation detection 1 piece
D	2

Ⓖ Option	
Blank	Hexagon socket set screw stopper screw with urethane
A With outer mount shock absorber	
A1	Installation position (1)
A2	Installation position (2)
A3	External shock absorber retrofitting (Installation groove machined)

⚠ Precautions for model No. selection

*1 : Port position of basic/high accuracy is provided on the side surface. Other ports are plugged.
*2 : The external shock absorber cannot be retrofitted onto the basic/high accuracy. Select the A3 type as an option if retrofitting.
*3 : If an external shock absorber is retrofit on the A3 type, the features will be the same as the A1 type. Consult CKD for A2 type.
*4 : For discrete switches and options, refer to page 1305.

[Example of model No.]
GRC-F-10-180-T2V-D-A1
Double acting

Ⓐ Model No. : Basic
Ⓑ Size : 10
Ⓒ Port thread : Rc thread
Ⓓ Oscillating angle : 180°
Ⓔ Switch model No. : Proximity/2-wire radial lead wire/ lead wire 1 m
Ⓕ Switch quantity : 2
Ⓖ Option : External shock absorber mounting position (1)

Outer mount shock absorber installation drawing

Installation position (1)
GRC-□-A1

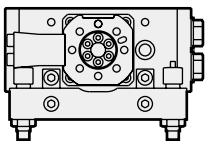

Installation position (2)
GRC-□-A2

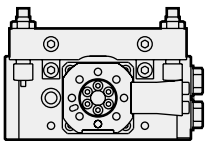

Retrofitting of external shock absorber
GRC-□-A3

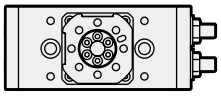

Clean-room specifications (Catalog No. CB-033SA)

● Anti-dust generation structure for use in cleanrooms

GRC-F - - - - - - - **P73**

GRC-KF - - - - - - - **P73**

Specifications for rechargeable battery (Catalog No. CC-1226A)

● Design compatible with rechargeable battery manufacturing process.

GRC - ··· - **P4***

LCM
LCR
LCG
LCW
LCX
STM
STG
STS/STL
STR2
UCA2
ULK*
JSK/M2
JSG
JSC3/JSC4
USSD
UFCD
USC
UB
JSB3
LMB
LML
HCM
HCA
LBC
CAC4
UCAC2
CAC-N
UCAC-N
RCS2
RCC2
PCC
SHC
MCP
GLC
MFC
BBS
RRC
GRC
RV3*
NHS
HRL
LN
Hand
Chuk
MecHnd/Chuk
ShkAbs
FJ
FK
SpdContr
Ending

Selection method

Select based on the following procedures.

Step 1 Oscillating time confirmation

↓

Step 2 Size (torque) selection
- (1) Static load
- (2) Resistance load
- (3) Inertia load

↓

Step 3 Allowable energy confirmation

↓

Step 4 Allowable load confirmation
- (1) Thrust load
- (2) Radial load
- (3) Moment load

Step 1 Oscillating time confirmation

If the oscillating time is set outside of the specified range, the actuator's operation may become unstable, or the actuator could be damaged. Always set the oscillating time within the specified oscillating time adjusting range.

	When used at 90°	When used at 180°
Oscillating time (s)	0.2 to 1.5	0.4 to 3.0

Step 2 Size (torque) selection

Selection method is roughly categorized into three load.
In each case, the required torque must be calculated. If the load is a compound load, add each torque to calculate the required torque.
Select size from theoretical torque table or actual torque diagram per working pressure to meet required torque.

(1) Static load (Ts)
When static pushing force is required for clamp, etc.

$$T_s = F_s \times L$$

Ts : Required torque (N·m)
Fs : Required force (N)
L : Length from center of rotation to pressure cone apex (m)

(2) Resistance load (T_R)
When force including frictional force, gravity or other external force is applied

$$T_R = K \times F_R \times L$$

T_R : Required torque (N·m)
K : Slack coefficient (Non-fluctuating load coefficient K = 2; When load fluctuates K = 5)
F_R : Required force (N)
L : Length from center of rotation to pressure cone apex (m)

(3) Inertia load (TA)
When the object is rotated

$$T_A = 5 \times I \times \dot{\omega}$$
$$\dot{\omega} = \frac{2\theta}{t^2}$$

T_A : Required torque (N·m)
I : Moment of inertia (kg·m^2)
$\dot{\omega}$: Maximum angular speed (rad/s^2)
θ : Oscillating angle (rad)
t : Oscillating time (s)
Calculate moment of inertia using moment of inertia and oscillation time (page 1324) or figure for moment of inertia calculation (page 1325).

Step 3 Allowable energy confirmation

When using an inertial load, if the load's kinetic energy exceeds the allowable value at the oscillating end, the actuator could be damaged. Select one within allowable energy according to Table 1.
If energy is too large, stop load with external shock absorber, etc.

$$E = \frac{1}{2} \times I \times \omega^2$$
$$\omega = \frac{2\theta}{t}$$

E : Kinetic energy (J)
I : Moment of inertia (kg·m^2)
ω : Angular speed at the end of oscillation (rad/s)
θ : Oscillating angle (rad)
t : Oscillating time (s)
Calculate moment of inertia using moment of inertia and oscillation time (page 1324) or figure for moment of inertia calculation (page 1325).

Selection method

Step 4 Allowable load confirmation

If load applies to table, load is to be within allowable value on Table 2.
If combined load is applied, total of ratio for allowable value per load is to be 1.0 or less.
Load is categorized with the following 3 types.

(1) Thrust load (axial load)

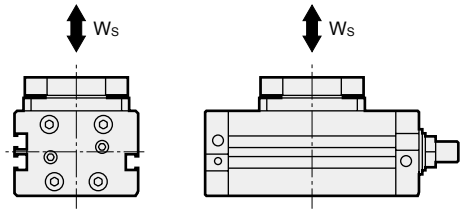

(2) Radial load (lateral load)

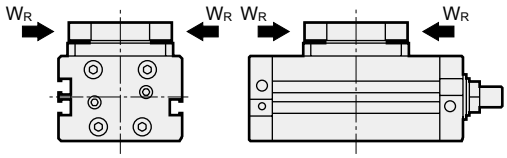

(3) Moment load

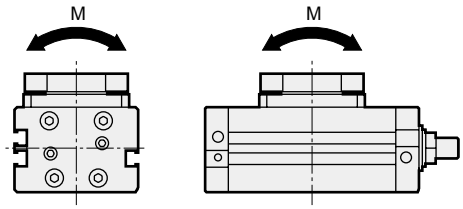

Substitute result to following formula, and check after each load is calculated.

$$\frac{W_s}{W_{smax}} + \frac{W_R}{W_{Rmax}} + \frac{M}{M_{max}} \leq 1.0$$

W_s : Thrust load (N)
W_R : Radial load (N)
M : Moment load (N·m)
W_{smax} : Allowable thrust load (N)
W_{Rmax} : Allowable radial load (N)
M_{max} : Allowable moment load (N·m)

Allowable value per allowable absorbed energy value and load is shown in the following table.

Table 1 Allowable absorbed energy value [J]

Size	5	10	20	30	50	80
Basic/high accuracy	0.005	0.008	0.03		0.04	0.11
With external shock absorber	0.46	0.59	1.15	1.71	2.33	2.78

Table 2 Allowable load value W_{Smax} W_{Rmax} M_{max}

Size		5	10	20	30	50	80
Thrust load	Basic	50	80	140	200	450	580
W_{Smax} [N]	High accuracy	-	120	220	440	550	650
Radial load	Basic	30	80	150	200	320	400
W_{Rmax} [N]	High accuracy	-	100	160	240	380	480
Moment load	Basic	1.5	2.5	4.0	5.5	10.0	13.0
M_{max} [N·m]	High accuracy	-	3.0	5.0	7.0	12.0	15.0

LCM
LCR
LCG
LCW
LCX
STM
STG
STS/STL
STR2
UCA2
ULK*
JSK/M2
JSG
JSC3/JSC4
USSD
UFCD
USC
UB
JSB3
LMB
LML
HCM
HCA
LBC
CAC4
UCAC2
CAC-N
UCAC-N
RCS2
RCC2
PCC
SHC
MCP
GLC
MFC
BBS
RRC
GRC
RV3*
NHS
HRL
LN
Hand
Chuk
MecHnd/Chuk
ShkAbs
FJ
FK
SpdContr
Ending

Selection example (1)

When rectangular parallelepiped load is applied

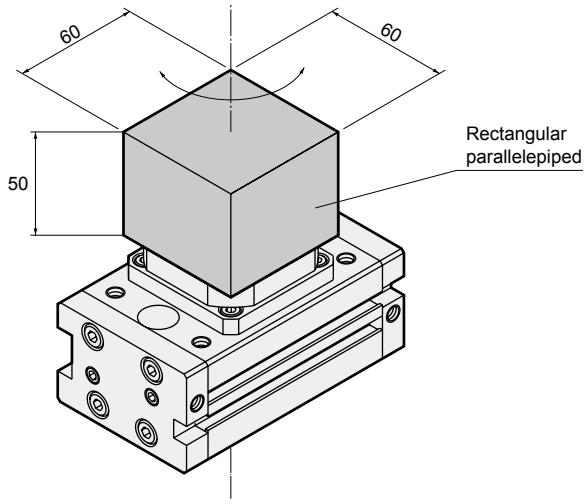

[Operation conditions]

Pressure	: 0.5(MPa)
Oscillating angle	: 90°
Oscillating time	: 0.6(s)
Load (material	: aluminum alloy)
[Rectangular parallelepiped]	: 0.5 (kg)

Step 1 Oscillating time confirmation

Oscillating time is 0.6 (s/90°) according to operation conditions. Since oscillating time is within adjusting range 0.2 to 1.5 (s/90°), go to next step.

Step 2 Size (torque) selection

First, calculate moment of inertia (I) due to inertia load.
[Rectangular parallelepiped]

$$I=0.5\times\frac{0.06^2}{6}=3\times10^{-4}\ (kg\cdot m^2)\ \ldots\ldots\ldots\ldots\ (1)$$

Then calculate the maximum angular speed ($\dot{\omega}$).

On conditions $\theta=90°=\frac{\pi}{2}$(rad), t=0.6(s)

Therefore,

$$\dot{\omega}=\frac{2\theta}{t^2}=\frac{\pi}{0.6^2}=8.73(rad/s^2)\ \ldots\ldots\ldots\ldots\ (2)$$

Therefore, inertia load (T_A) from (1) and (2)

$T_A = 5\times3\times10^{-4}\times8.73$

$= 0.0131\ (N\cdot m)\ \ldots\ldots\ldots\ldots\ (3)$

According to (3) value and operational conditions and torque at 0.5 (MPa)

GRC-5-90 ..... (A)

can be selected.

Step 3 Allowable energy confirmation

Check if value is within allowable energy after kinetic energy is calculated.
Calculate the angular speed at the end of oscillation ω.

On conditions $\theta=90°=\frac{\pi}{2}$(rad), t=0.6(s)

Therefore,

$$\omega=\frac{2\theta}{t}=\frac{\pi}{0.6}=5.24(rad/s)$$

Therefore, kinetic energy (E) is

$$E=\frac{1}{2}\times3\times10^{-4}\times5.24^2$$

$$=0.00412(J)\ \ldots\ldots\ldots\ldots\ (4)$$

From (4) and (A) selected at Step 2

GRC-5-90 ……(B)

can be selected.

Step 4 Allowable load confirmation

Finally, check if value is within allowable load range after load value that applies to table is calculated.

[Thrust load]

Thrust load (Ws),

Ws=0.5×9.8=4.9(N) ……....(5)

[Radial load]

Since no radial load is applied,

W_R=0(N) ……...(6)

[Moment load]

Since no moment load is applied,

M = 0 (N·m) .....(7)

According to (5), (6), (7), (B),

$$\frac{W_s}{W_{smax}}+\frac{W_R}{W_{Rmax}}+\frac{M}{M_{max}}$$

$$=\frac{4.9}{50}+\frac{0}{30}+\frac{0}{1.5}=0.098\leq1.0\ \ldots\ldots(C)$$

According to (B) and (C), total load value is within allowable load value.

GRC - 5 - 90

Selection example (2)

When rectangular parallelepiped load is applied to rectangle plate

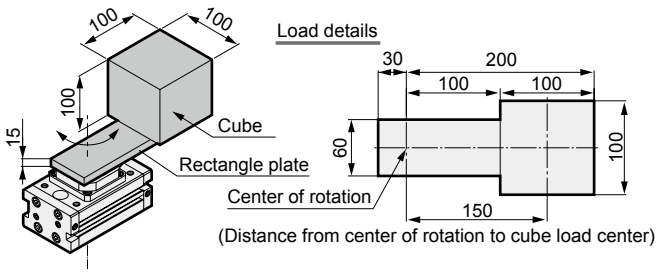

[Operation conditions]
Pressure : 0.5(MPa)
Oscillating angle : 90°
Oscillating time : 1.0(s)
Load (material: steel)
[Rectangle plate on left from center of rotation] : 0.21 (kg)
[Rectangle plate on right from center of rotation] : 1.40 (kg)
[Cube] : 7.8 (kg)

Step 1 Oscillating time confirmation

Oscillating time is 1.0 (s/90°) according to operation conditions. Since oscillating time is within adjusting range 0.2 to 1.5 (s/90°), go to next step.

Step 2 Size (torque) selection

First, calculate moment of inertia (I) due to inertia load.
[Rectangle plate]

$$I_1=1.40\times\frac{4\times0.20^2+0.06^2}{12}+0.21\times\frac{4\times0.03^2+0.06^2}{12}$$

$$=1.92\times10^{-2}\ (\mathrm{kg\cdot m^2})$$

[Cube]

$$I_2=7.8\times\frac{0.1^2}{6}+7.8\times0.15^2$$

$$=0.189\ (\mathrm{kg\cdot m^2})$$

Therefore, total moment of inertia (I) is as follows.
$I = I_1 + I_2 = 0.21\ (\mathrm{kg\cdot m^2})$ .....(1)
Then calculate the maximum angular speed (ω).

On conditions $\theta=90°=\frac{\pi}{2}$(rad), t=1.0(s)

Therefore,

$$\dot{\omega}=\frac{2\theta}{t^2}=\frac{\pi}{1.0^2}=3.14(\mathrm{rad/s^2})\quad\ldots\ldots\ldots\ldots(2)$$

Therefore, inertia load (T_A) from (1) and (2)
$T_A = 5 \times 0.21 \times 3.14$
$= 3.30\ (\mathrm{N\cdot m})$ .....(3)
According to (3) value and operational conditions, from torque at 0.5 (MPa)
GRC-50-90 .....(A)
can be selected.

Step 3 Allowable energy confirmation

Check if value is within allowable energy after kinetic energy is calculated.
Calculate the angular speed at the end of oscillation ω.

On conditions $\theta=90°=\frac{\pi}{2}$(rad), t=1.0(s)

Therefore,

$$\omega=\frac{2\theta}{t}=\frac{\pi}{1.0}=3.14(\mathrm{rad/s})$$

Therefore, kinetic energy (E) is

$$E=\frac{1}{2}\times0.19\times3.14^2$$

$$=0.937(\mathrm{J})\quad\ldots\ldots\ldots\ldots(4)$$

From (4) and (A) selected at Step 2
GRC - 80 - 90 - A1,A2 .....(B)
can be selected.

Step 4 Allowable load confirmation

Finally, check if value is within allowable load range after load value that applies to table is calculated.
[Thrust load]
Total weight
$7.8 + 1.40 + 0.21 = 9.41$ (kg)
Thus, thrust load (Ws)
$Ws = 9.41 \times 9.8 = 92.2(\mathrm{N})$ .....(5)
[Radial load]
Since no radial load is applied,
$W_R = 0(\mathrm{N})$.....(6)
[Moment load]
Moment load (M_1) of rectangle plate,
$1.40 \times 9.8 = 13.72(\mathrm{N})$
$0.21 \times 9.8 = 2.06(\mathrm{N})$
Therefore,
$M_1 = 13.72 \times 0.1 - 2.06 \times 0.015$
$= 1.34\ (\mathrm{N\cdot m})$
Moment load (M_2) of rectangular parallelepiped
$7.8 \times 9.8 = 76.44(\mathrm{N})$
Therefore,
$M_2 = 76.44 \times 0.15 = 11.47\ (\mathrm{N\cdot m})$
Therefore, the sum of M_1 and M_2,
$M = 1.34 + 11.47 = 12.81\ (\mathrm{N\cdot m})$ .....(7)
According to (5), (6), (7), (B),

$$\frac{W_s}{W_{smax}}+\frac{W_R}{W_{Rmax}}+\frac{M}{M_{max}}$$

$$=\frac{92.2}{450}+\frac{0}{320}+\frac{12.8}{10}=1.48>1.0$$

Increase by one size and recalculate with GRC-80-90 since moment load is exceeding allowable value.

$$\frac{W_s}{W_{smax}}+\frac{W_R}{W_{Rmax}}+\frac{M}{M_{max}}$$

$$=\frac{92.2}{580}+\frac{0}{400}+\frac{12.8}{13}=1.14>1.0$$

Since total load value is still exceeding allowable value, select high accuracy, and calculate

$$\frac{W_s}{W_{smax}}+\frac{W_R}{W_{Rmax}}+\frac{M}{M_{max}}$$

$$=\frac{92.2}{650}+\frac{0}{480}+\frac{12.8}{15}=0.99\leq1.0\quad\ldots\ldots(C)$$

According to (C), total load value is within the allowable load value,so
GRC - K - 80 - 90 - A1,A2
can be selected.

LCM
LCR
LCG
LCW
LCX
STM
STG
STS/STL
STR2
UCA2
ULK*
JSK/M2
JSG
JSC3/JSC4
USSD
UFCD
USC
UB
JSB3
LMB
LML
HCM
HCA
LBC
CAC4
UCAC2
CAC-N
UCAC-N
RCS2
RCC2
PCC
SHC
MCP
GLC
MFC
BBS
RRC
GRC
RV3*
NHS
HRL
LN
Hand
Chuk
MecHnd/Chuk
ShkAbs
FJ
FK
SpdContr
Ending

Selection example (3)

When load is applied to rectangle plate with rotary shaft horizontal

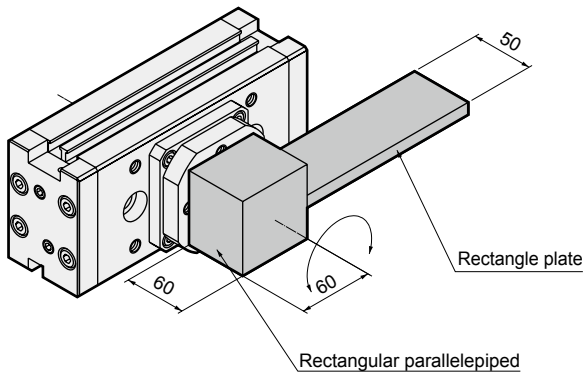

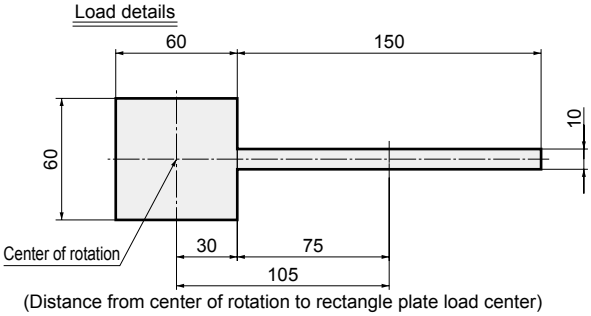

(Distance from center of rotation to rectangle plate load center)

[Operation conditions]

Pressure : 0.5(MPa)
Oscillating angle : 180°
Oscillating time : 0.5(s)
Load (material: aluminum alloy)
[Rectangle plate] : 0.2 (kg)
[Rectangular parallelepiped] : 0.5 (kg)

Step 1 Oscillating time confirmation

Oscillating time is 0.5 (s/180°) according to operation conditions. Since oscillating time is within adjusting range 0.4 to 3.0 (s/180°), go to next step.

Step 2 Size (torque) selection

This is a gravitational resistance load and inertial load, so calculate the resistance load (T_R) and moment of inertia (I).

[Resistance load]

Resistance load varies per rotation of table.

$F_R = 0.2 \times 9.8 = 1.96$(N)

R = 0.105(m)

Therefore,

$T_R = 5 \times 1.96 \times 0.105 = 1.03$ (N·m) .....(1)

[Inertia load]

[Rectangle plate]

$$I_1 = 0.2 \times \frac{0.15^2}{12} + 0.2 \times 0.105^2$$

$$= 2.58 \times 10^{-3}\ (\mathrm{kg \cdot m^2})$$

[Rectangular parallelepiped section]

$$I_2 = 0.5 \times \frac{0.06^2}{6} = 3 \times 10^{-4}\ (\mathrm{kg \cdot m^2})$$

Therefore, total moment of inertia (I) is as follows.

$I = I_1 + I_2 = 2.88 \times 10^{-3}\ (\mathrm{kg \cdot m^2})$ .....(2)

Then calculate the maximum angular speed (ω).

On conditions θ = 180° = π (rad), t = 0.5 (s)

Therefore,

$$\dot{\omega} = \frac{2\theta}{t^2} = \frac{2\pi}{0.5^2} = 25.13(\mathrm{rad/s^2}) \text{.....(3)}$$

Therefore, inertia load (T_A) from (2) and (3)

$T_A = 5 \times 2.88 \times 10^{-3} \times 25.13$

$= 0.362$ (N·m) .....(4)

According to (1), (4), total torque (T)

T = 1.03 + 0.362 = 1.39 (N·m) .....(5)

According to (5) value and operational conditions, from torque at 0.5 (MPa)

GRC - 20 - 180 .....(A)

can be selected.

Step 3 Allowable energy confirmation

Check if value is within allowable energy after kinetic energy is calculated.

Calculate the angular speed at the end of oscillation ω.

On conditions θ = 180° = π (rad), t = 0.5 (s)

Therefore,

$$\omega = \frac{2\theta}{t} = \frac{2\pi}{0.5} = 12.57(\mathrm{rad/s})$$

Therefore, kinetic energy (E) is

$$E = \frac{1}{2} \times 2.88 \times 10^{-3} \times 12.57^2$$

$$= 0.23(\mathrm{J}) \text{ .....(6)}$$

From (6) and (A) selected at Step 2

GRC - 20 - 180 - A1,A2 .....(B)

can be selected.

Selection example (3)

Step 4 Allowable load confirmation

Finally, check if value is within allowable load range after load value that applies to table is calculated.

[Thrust load]

Since no thrust load is applied, thrust load (Ws)

$Ws = 0(N)$ .....(7)

[Radial load]

Total weight

$0.2 + 0.5 = 0.7$ (kg)

Therefore,

$W_R = 0.7 \times 9.8 = 6.9(N)$.....(8)

[Moment load]

Moment load (M) from the figure below

$M = 0.03 \times (0.2 + 0.5) \times 9.8$

$= 0.21$ (N·m) .....(9)

According to (7), (8), (9), (B),

$$\frac{W_s}{W_{smax}} + \frac{W_R}{W_{Rmax}} + \frac{M}{M_{max}}$$

$$= \frac{0}{150} + \frac{6.9}{140} + \frac{0.21}{4.0} = 0.101 \leq 1.0 \text{.....(C)}$$

According to (B) and (C), total load value is within the allowable load value.

GRC - 20 - 180 - A1, A2

can be selected.

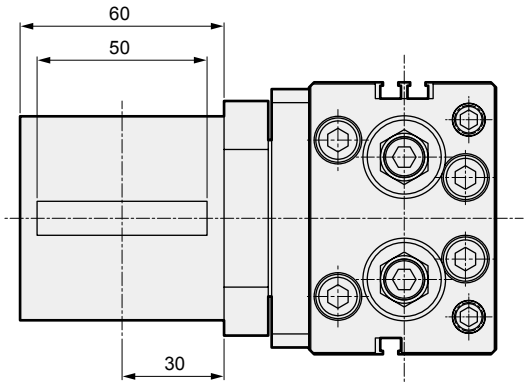

LCM
LCR
LCG
LCW
LCX
STM
STG
STS/STL
STR2
UCA2
ULK*
JSK/M2
JSG
JSC3/JSC4
USSD
UFCD
USC
UB
JSB3
LMB
LML
HCM
HCA
LBC
CAC4
UCAC2
CAC-N
UCAC-N
RCS2
RCC2
PCC
SHC
MCP
GLC
MFC
BBS
RRC
GRC
RV3*
NHS
HRL
LN
Hand
Chuk
MecHnd/Chuk
ShkAbs
FJ
FK
SpdContr
Ending

1. Energy absorbing performance and oscillating time

(1) For rubber cushion, relations between moment of inertia and oscillating time are shown in the line graph below. Always use within the lower right range of the graph as the shaft, etc., could break. Use for selection reference, etc.

● Basic/high accuracy

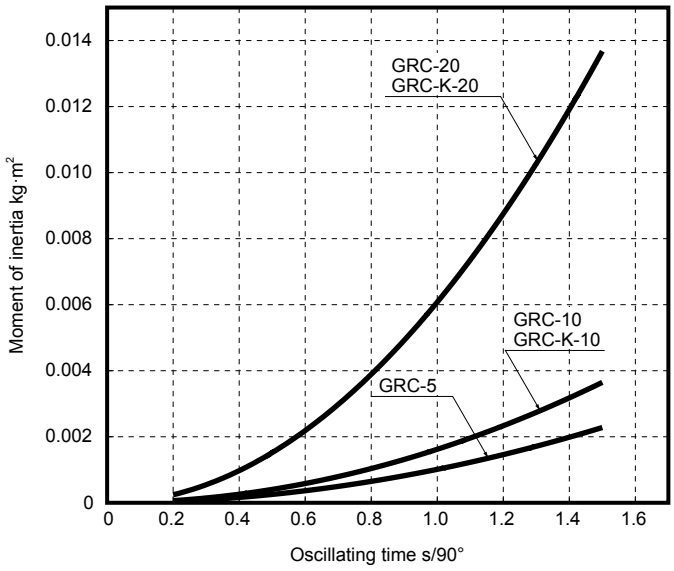

Size 5, 10, 20

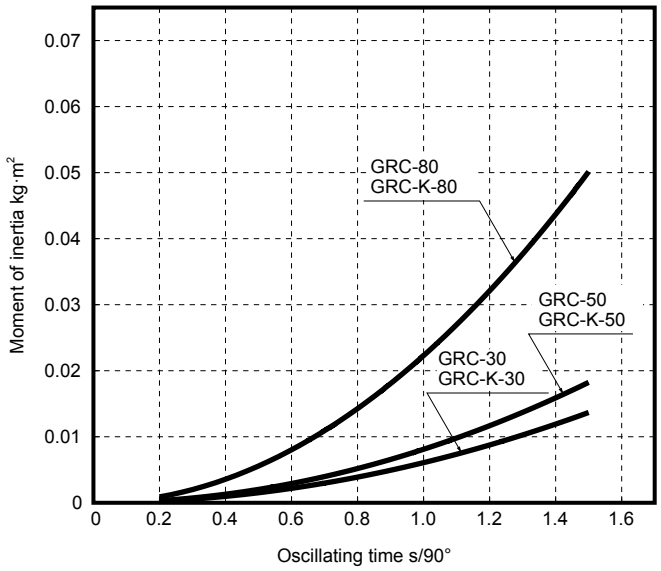

Size 30, 50, 80

(2) The relation of the absorbed energy and oscillating time when an external shock absorber is installed is shown with the following line graph. Always use within the lower left range of the graph since the shaft, etc., could break. Use for selection reference, etc.

● Absorbed energy and oscillating time

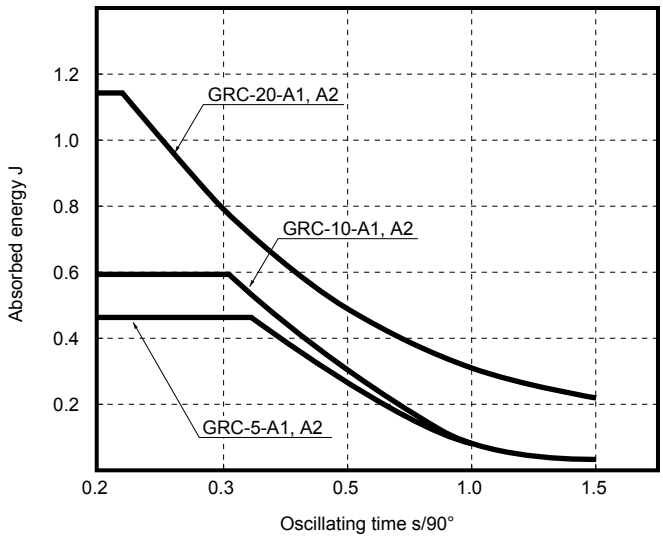

Size 5, 10, 20

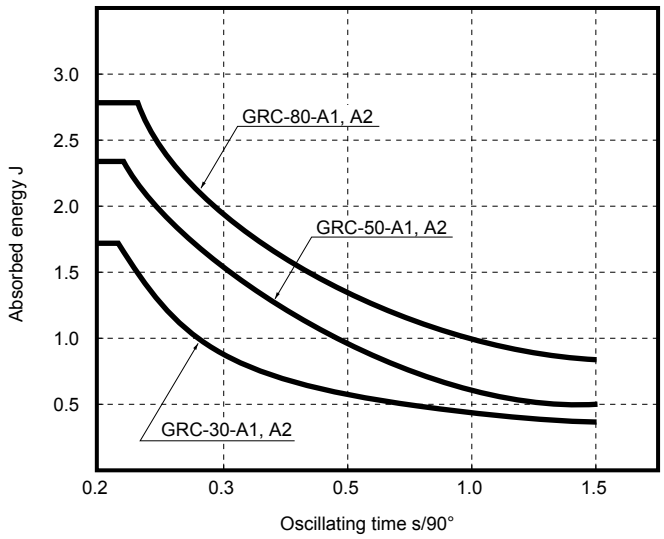

Size 30, 50, 80

2. Figure for moment of inertia calculation

When rotary shaft passes through the workpiece

Shape	Sketch	Requirements	Moment of inertia I kg·m²	Radius of rotation K_1^2	Remarks
Dial plate	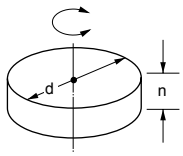	● Diameter d (m) ● Weight M (kg)	$I=\frac{Md^2}{8}$	$\frac{d^2}{8}$	● No mounting direction ● For sliding use, contact CKD.
Circular stepped plate	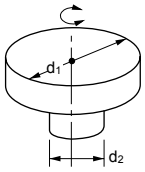	● Diameter d_1 (m) d_2 (m) ● Weight d_1 section M_1 (kg) d_2 section M_2 (kg)	$I=\frac{1}{8}(M_1d_1^2+M_2d_2^2)$	$\frac{d_1^2+d_2^2}{8}$	● Ignore when the d_2 section is extremely small compared to the d_1 section
Bar (center of rotation at end)	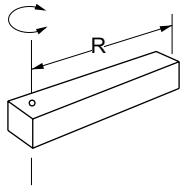	● Bar length R (m) ● Weight M (kg)	$I=\frac{MR^2}{3}$	$\frac{R^2}{3}$	● Mounting direction is horizontal ● Oscillating time changes when the mounting direction is vertical
Thin rod	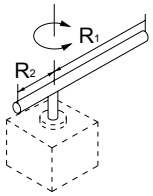	● Bar length R_1 R_2 ● Weight M_1 M_2	$I=\frac{M_1/R_1^2}{3}+\frac{M_2/R_2^2}{3}$	$\frac{R_1^2+R_2^2}{3}$	● Mounting direction is horizontal ● Oscillating time changes when the mounting direction is vertical
Bar (center of rotation at center of gravity)	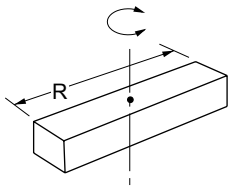	● Bar length R (m) ● Weight M (kg)	$I=\frac{MR^2}{12}$	$\frac{R^2}{12}$	● No mounting direction
Thin rectangle plate (rectangular parallelepiped)	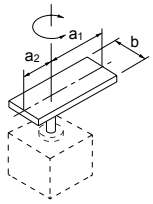	● Plate length a_1 a_2 ● Side length b ● Weight M_1 M_2	$I=\frac{M_1}{12}(4a_1^2+b^2)+\frac{M_2}{12}(4a_2^2+b^2)$	$\frac{(4a_1^2+b^2)+(4a_2^2+b^2)}{12}$	● Mounting direction is horizontal ● Oscillating time changes when the mounting direction is vertical
Rectangular parallelepiped	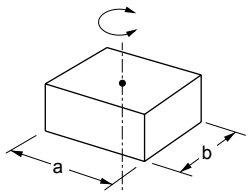	● Side length a(m) b(m) ● Weight M(kg)	$I=\frac{M}{12}(a^2+b^2)$	$\frac{a^2+b^2}{12}$	● No mounting direction ● For sliding use, contact CKD.
Concentrated load	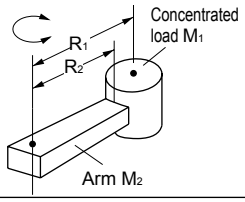	● Shape of concentrated load ● Length to center of gravity of concentrated load R_1 ● Arm length R_2(m) ● Concentrated load weight M_1(kg) ● Arm weight M_2(kg)	$I=M_1(R_1^2+k_1^2)+\frac{M_2R_2^2}{3}$	Calculate k_1^2 according to shape of concentrated load	● Mounting direction is horizontal ● When M_2 is extremely small compared to M_1, it may be calculated as $M_2 = 0$

How to convert load J_L to rotary actuator shaft rotation when using with gear

Gear	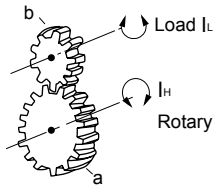	● Gear Rotary side (tooth number) a Load side (geartooth number) b ● Load inertia moment N·m	Load moment of inertia for the rotary actuator's shaft rotation $I_H=\left(\frac{a}{b}\right)^2 I_L$		● When gear shape is larger, gear moment of inertia should be considered.

LCM
LCR
LCG
LCW
LCX
STM
STG
STS/STL
STR2
UCA2
ULK*
JSK/M2
JSG
JSC3/JSC4
USSD
UFCD
USC
UB
JSB3
LMB
LML
HCM
HCA
LBC
CAC4
UCAC2
CAC-N
UCAC-N
RCS2
RCC2
PCC
SHC
MCP
GLC
MFC
BBS
RRC
GRC
RV3*
NHS
HRL
LN
Hand
Chuk
MecHnd/Chuk
ShkAbs
FJ
FK
SpdContr
Ending

● Rotary shaft offsets from workpiece

Shape	Sketch	Requirements	Moment of inertia I kg·m²	Remarks
Rectangular parallelepiped	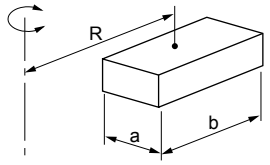	● Side length a(m) ● Distance from rotary shaft to load center b(m) R(m) ● Weight M(kg)	$I=\frac{M}{12}(a^2+b^2)+MR^2$	● Same for cube
Hollow rectangular parallelepiped	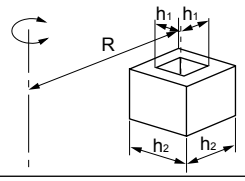	● Side length h_1(m) h_2(m) ● Distance from rotary shaft to load center R(m) ● Weight M(kg)	$I=\frac{M}{12}(h_1^2+h_2^2)+MR^2$	● Cross section is for cube only
Cylinder	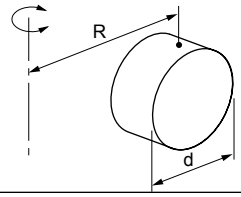	● Diameter d(m) ● Distance from rotary shaft to load center R(m) ● Weight M(kg)	$I=\frac{Md^2}{16}+MR^2$	
Hollow cylinder	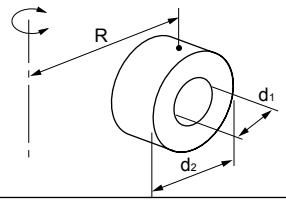	● Diameter d_1(m) d_2(m) ● Distance from rotary shaft to load center R(m) ● Weight M(kg)	$I=\frac{M}{16}(d_1^2+d_2^2)+MR^2$	

* To find moment of inertia, first convert load, jig, etc., to simple shapes with modeling, then calculate values. For the combined load, calculate each inertial moment and their total.

3. Table deflection (reference value)

Displacement (reference value) of table at 100 mm away from center of rotation when moment load is applied to GRC is shown below. (It is assumed that the table is in a non-rotating stationary state.)

Measuring method

Table deflection

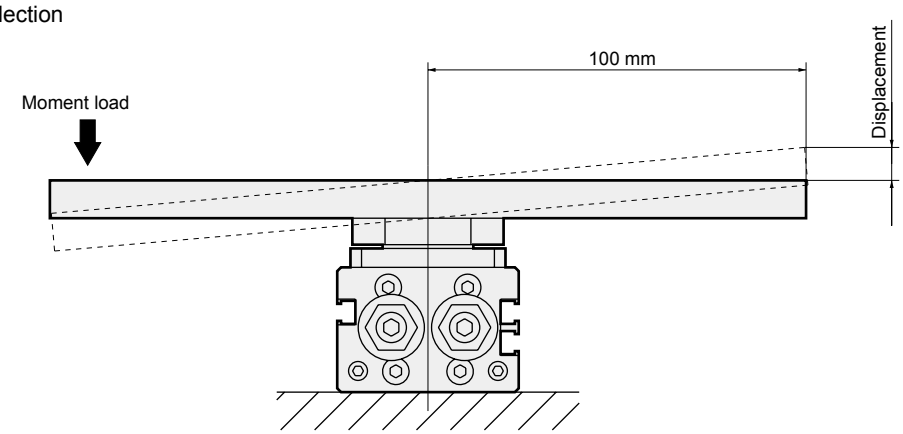

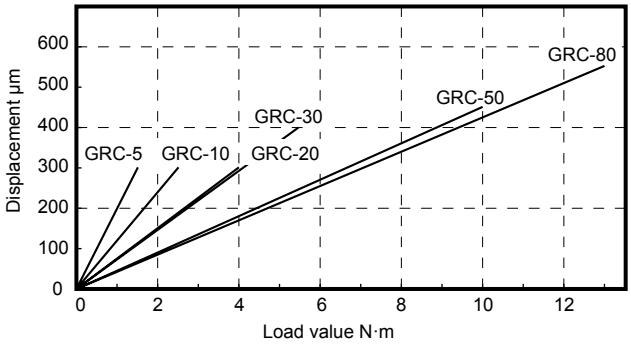

Table deflection of GRC (basic)

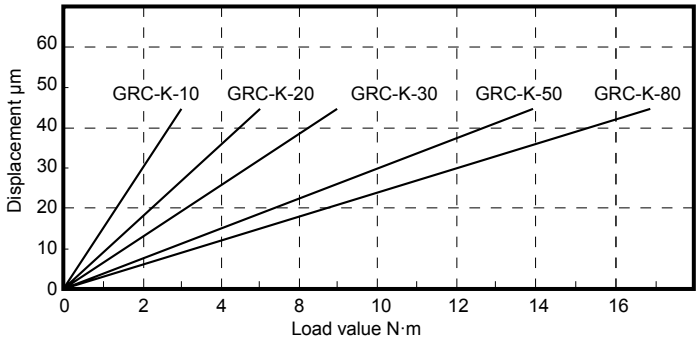

Table deflection of GRC-K (high accuracy)

LCM
LCR
LCG
LCW
LCX
STM
STG
STS/STL
STR2
UCA2
ULK*
JSK/M2
JSG
JSC3/JSC4
USSD
UFCD
USC
UB
JSB3
LMB
LML
HCM
HCA
LBC
CAC4
UCAC2
CAC-N
UCAC-N
RCS2
RCC2
PCC
SHC
MCP
GLC
MFC
BBS
RRC
GRC
RV3*
NHS
HRL
LN
Hand
Chuk
MecHnd/Chuk
ShkAbs
FJ
FK
SpdContr
Ending

4. Effective torque diagram

Note that torque at oscillation end is half of the value in the graph below.
(The torque is as shown in the table when the end stopper is an external stopper (shock absorber, etc.).)

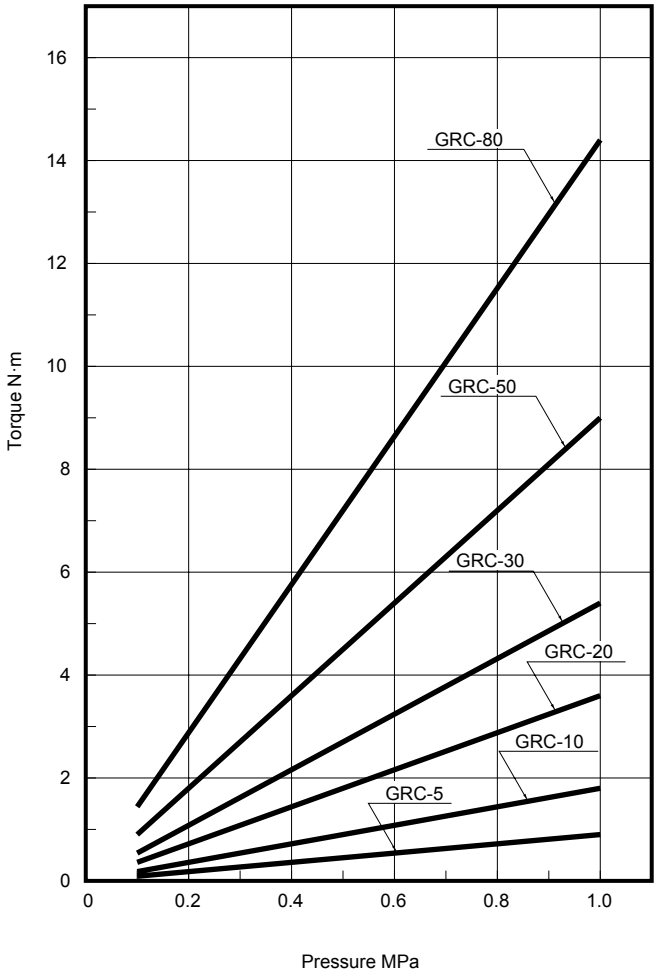

5. Oscillating angle adjustment method

● Basic/high accuracy

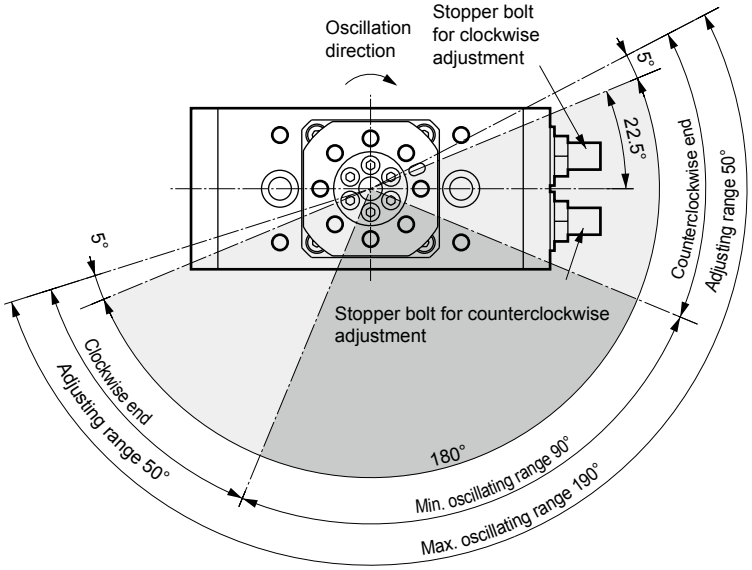

180° specifications

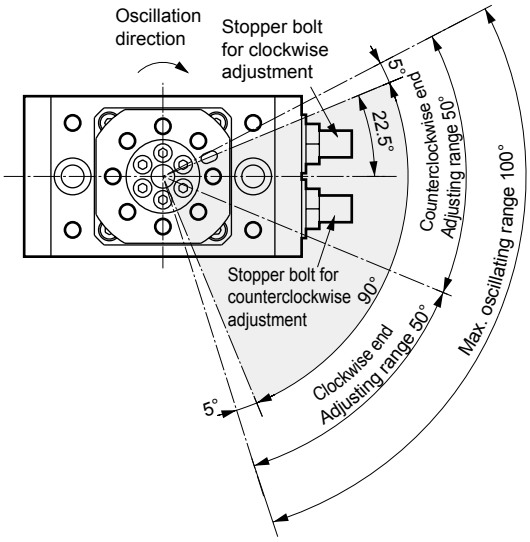

90° specifications

● With external shock absorber (GRC-*-A1)

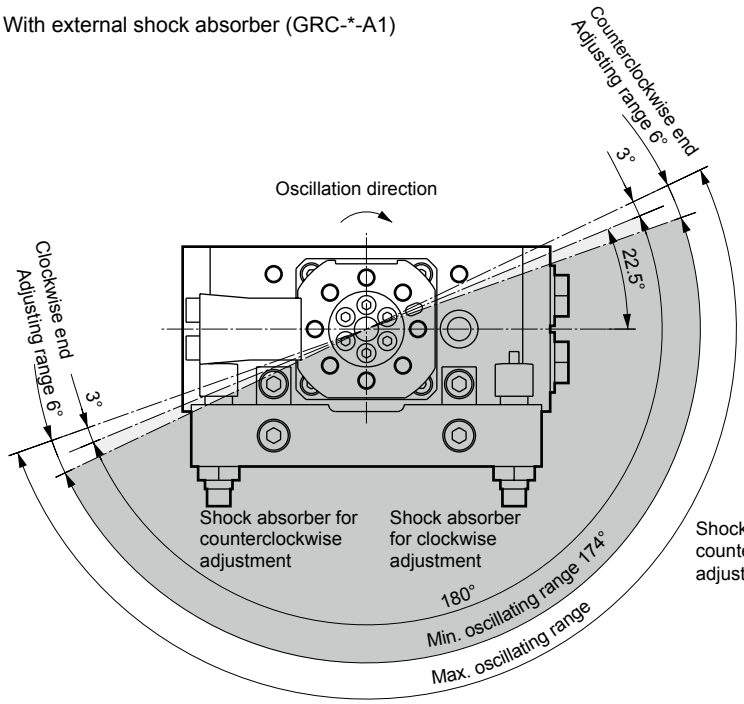

180° specifications

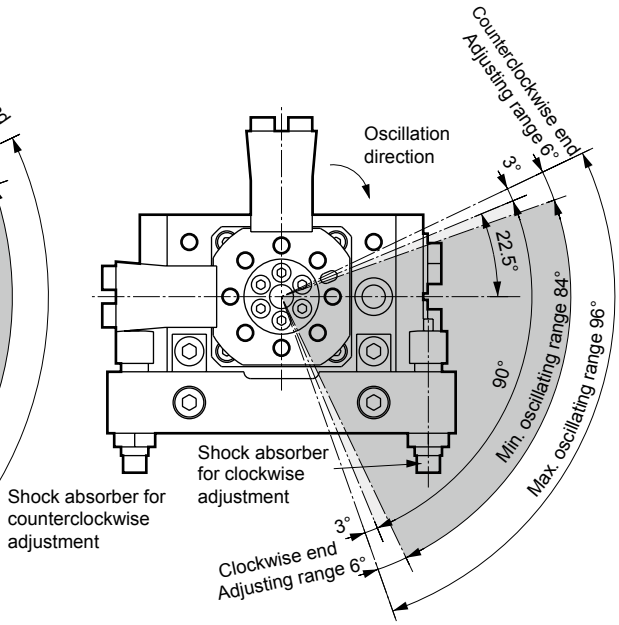

90° specifications

LCM
LCR
LCG
LCW
LCX
STM
STG
STS/STL
STR2
UCA2
ULK*
JSK/M2
JSG
JSC3/JSC4
USSD
UFCD
USC
UB
JSB3
LMB
LML
HCM
HCA
LBC
CAC4
UCAC2
CAC-N
UCAC-N
RCS2
RCC2
PCC
SHC
MCP
GLC
MFC
BBS
RRC
GRC
RV3*
NHS
HRL
LN
Hand
Chuk
MecHnd/Chuk
ShkAbs
FJ
FK
SpdContr
Ending

● With external shock absorber (GRC-*-A2)

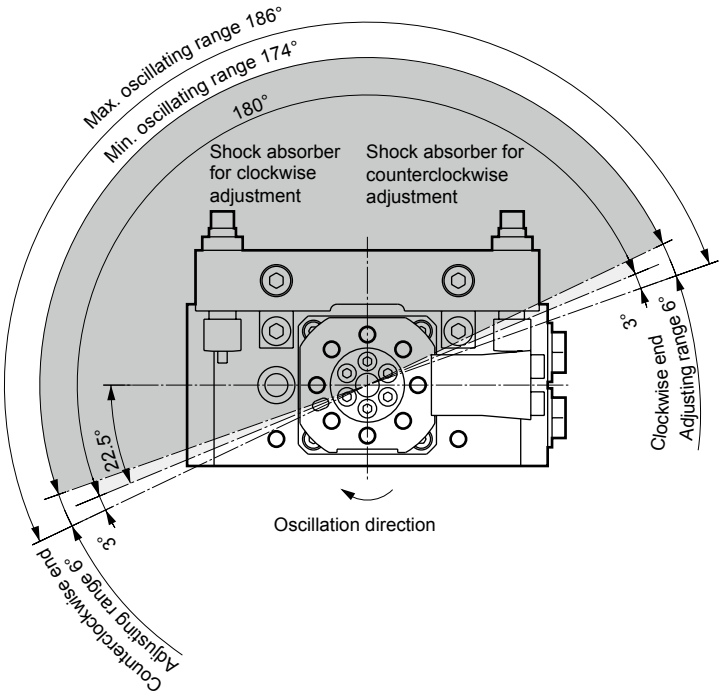

180° specifications

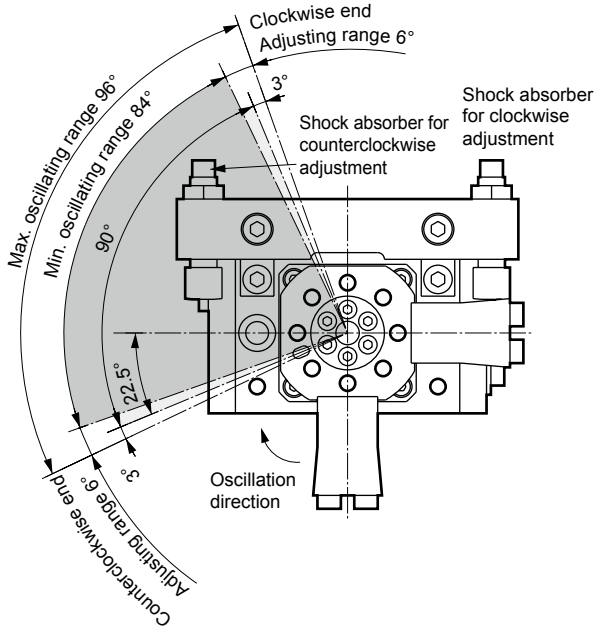

90° specifications

Pneumatic components

Safety Precautions

Be sure to read this section before use.
Refer to Intro Page 73 for general information of the cylinder, and to Intro Page 80 for general information of the cylinder switch.

Product-specific cautions: Table rotary actuator GRC Series

Design/selection

1. Common

CAUTION

- Generally, select the model so that the output torque is twice or more than that required by the load.
  The GRC Series uses a double piston, so if the oscillating angle is adjusted by the stopper bolt, torque at the oscillation end will be half the effective torque.

- Even if the required torque load is low during oscillation motion, the load inertia may lead to actuator damage. Upon consideration of moment of inertia, kinetic energy and oscillating time, be sure to use with the allowable energy or less.

- Note that when an external shock absorber is connected, torque is reduced by the return force of the spring built into the shock absorber at the oscillating end.

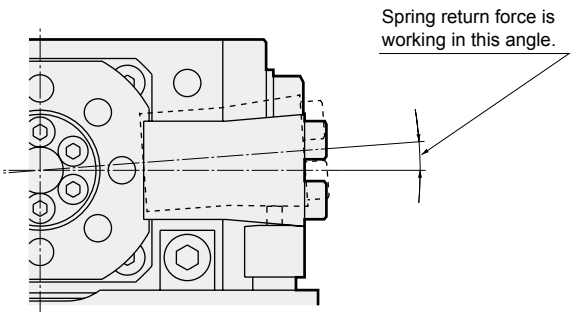

- The external shock absorber absorbs the kinetic energy of the workpiece at the oscillation end, buffering the impact. A smooth stop may not be achieved under certain load conditions.

2. Fine speed GRC-F

CAUTION

- Use without lubrication. (Lubrication not possible)
  Applying lubrication may cause changes in characteristics.

- Assemble the speed controller near the rotary actuator.
  When installed at a distant place from the rotary actuator, the adjustment becomes unstable.
  Use the SC-M3/M5, SC3W, SCD-M3/M5 or SC3U Series speed controller.

- At the higher air pressure and the lower load factor, the speed generally becomes more stable.
  Use at a 50% or less load factor.

- Stable speed control is achieved with a meter-out circuit.

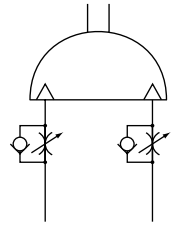

PUSH : Meter-out
PULL : Meter-out

- Avoid use in places subject to vibrations.
  The product will be adversely affected by vibration and operation will become unstable.

LCM
LCR
LCG
LCW
LCX
STM
STG
STS/STL
STR2
UCA2
ULK*
JSK/M2
JSG
JSC3/JSC4
USSD
UFCD
USC
UB
JSB3
LMB
LML
HCM
HCA
LBC
CAC4
UCAC2
CAC-N
UCAC-N
RCS2
RCC2
PCC
SHC
MCP
GLC
MFC
BBS
RRC
GRC
RV3*
NHS
HRL
LN
Hand
Chuk
MecHnd/Chuk
ShkAbs
FJ
FK
SpdContr
Ending

Mounting, installation and adjustment

1. Common

⚠ CAUTION

■ Do not apply additional processing to the product.
If modified, the product's strength will decrease, possibly causing product damage. This may result in injury or damage to operator, components, or equipment.

■ Do not widen the fixed orifice on the piping port by re-machining, etc. If the fixed orifice is widened, the actuator operation speed and impact will increase, damaging the actuator. Moreover, be sure to attach a speed controller during piping before use.

■ Select among 3 surfaces for piping port. Ports other than the side piping port are plugged when the product is shipped. When changing the piping port, interchange these plugs. When changing ports for the GRC-5 to 30, apply the recommended adhesive to plugs. When changing ports for GRC- 50 or 80, apply recommended adhesive or wrap sealing tape around plugs. Failure to do so may lead to air leakage.
[Recommended adhesive]
LOCTITE 222 [Loctite Japan Corp.]
ThreeBond 1344 [ThreeBond Co., Ltd]

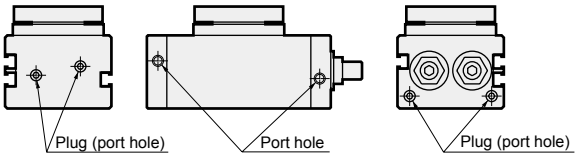

■ The relationship of piping ports and oscillation direction is shown below.

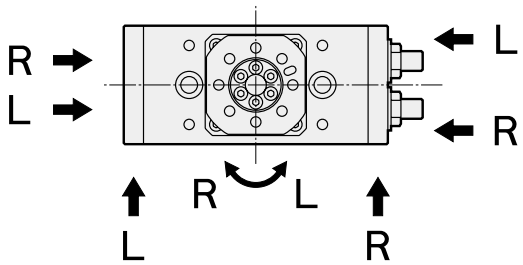

R: Clockwise rotation (right)
L: Counterclockwise rotation (left)

■ An angle adjustment screw (stopper bolt or shock absorber) for adjustment of the oscillating angle is provided as standard equipment. When the product is shipped, the angle adjustment screw is adjusted randomly within the oscillation adjusting range. Readjust this to the required angle before use.

■ Adjust the angle to within the adjusting range specified for the product.
If used outside of the adjusting range, the product may be damaged or malfunction. Refer to product specifications (page 1302) and oscillating angle adjustment (page 1329).

■ The adjustment angle per rotation of the angle adjusting screw (stopper bolt of shock absorber) is shown below.

Basic/high accuracy

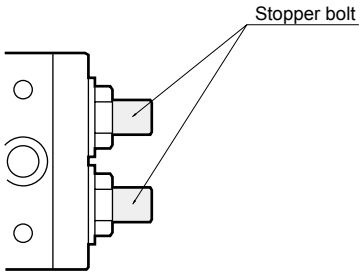

With external shock absorber

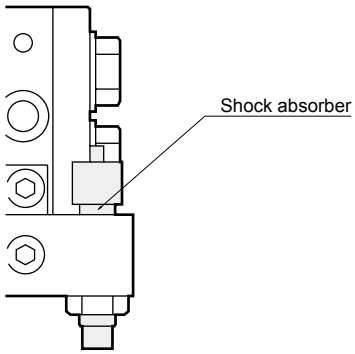

Table 1

Size	Stopper bolt adjustment angle per rotation	Shock absorber adjustment angle per rotation
5	8.7°	1.1°
10	4.9°	1.0°
20	5.7°	1.1°
30	3.8°	0.9°
50	3.5°	0.7°
80	3.5°	0.9°

■ Observe steps (1) to (5) when adjusting the angle. If adjustments are not made this way, the seal washer will be damaged after one or two adjustments.

[Angle adjustment procedure]

(1) First loosen the hexagon nut as shown in Fig.1.

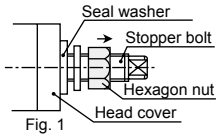

Fig. 1

(2) Second, remove the seal washer from the head cover by hand as shown in Fig.2.

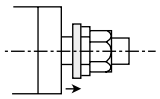
Fig. 2

(3) Turn the stopper bolt, hexagon nut, and seal washer together as shown in Fig.3, and adjust the angle. Check that the rubber section of the seal washer does not bite into the thread part.

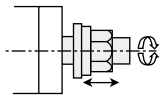
Fig. 3

(4) After adjusting the angle, move the seal washer near to the head cover by hand as shown in Fig. 4.

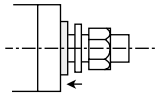
Fig. 4

(5) Tighten securely with the hexagon nut as shown in Fig. 5. Check that the rubber section of the seal washer does not bite into the thread part.

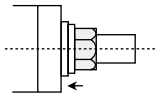
Fig. 5

After adjusting the angle, securely tighten the hexagon nut with the tightening torque in Table 2. If tightening torque is not adhered to then the hex nut could loosen in the course of usage, resulting in external leakage.

■ When replacing the stopper bolt for angle adjustment (the hex bolt if an external shock absorber is used) with a sealed washer, be sure that the hex nut (hex bolt if an external shock absorber is used) is tightened to the correct torque according to Table 2. Failure to do so may lead to air leakage.

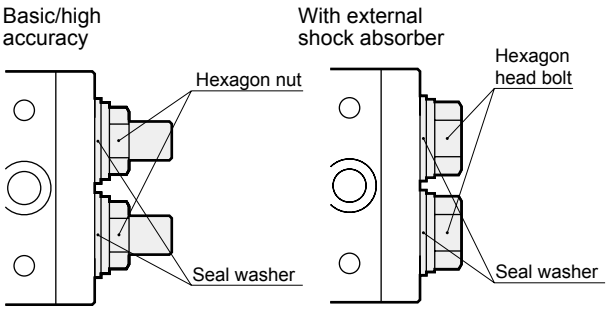

Table 2

Size	Tightening torque (N·m)	
	Basic/high accuracy	With external shock absorber
5	5.9±10%	3.4±10%
10	9.4±10%	4.9±10%
20	11.8±10%	6.9±10%
30	11.8±10%	6.9±10%
50	22.1±10%	8.8±10%
80	22.1±10%	8.8±10%

■ Make sure the tightening torque of the shock absorber nut is in accordance with Table 3. If the tightening torque exceeds the value below, the shock absorber may be damaged.

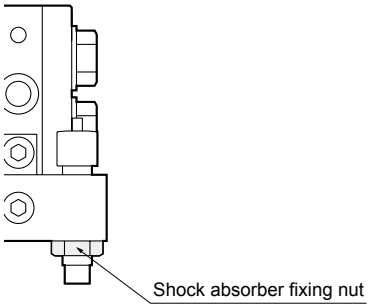

Table 3

Size	5	10	20	30	50	80
Tightening torque N·m	1.47		1.96		5.14	8.58

■ When retrofitting A3 types with an external shock absorber, the tightening torque for the mounting hex socket bolt or lever mounting hex socket bolt is shown in Table 4.

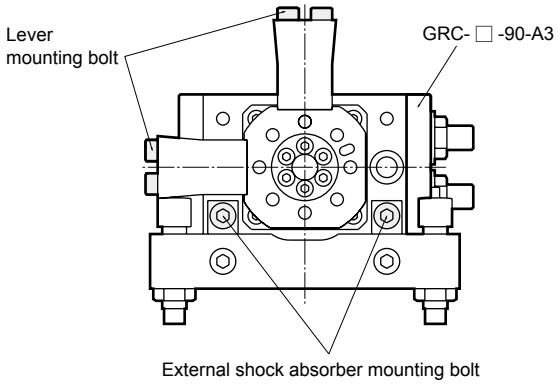

Table 4

Size	Lever mounting bolt	External shock absorber mounting bolt
	Tightening torque (N·m)	Tightening torque (N·m)
5	0.6±20%	1.4±20%
10	1.4±20%	2.9±20%
20	2.8±20%	4.8±20%
30	2.8±20%	4.8±20%
50	12.0±20%	12.0±20%
80	12.0±20%	12.0±20%

LCM
LCR
LCG
LCW
LCX
STM
STG
STS/STL
STR2
UCA2
ULK*
JSK/M2
JSG
JSC3/JSC4
USSD
UFCD
USC
UB
JSB3
LMB
LML
HCM
HCA
LBC
CAC4
UCAC2
CAC-N
UCAC-N
RCS2
RCC2
PCC
SHC
MCP
GLC
MFC
BBS
RRC
GRC
RV3*
NHS
HRL
LN
Hand
Chuk
MecHnd/Chuk
ShkAbs
FJ
FK
SpdContr
Ending

■ A rubber cushion is built into GRC types. (Basic, high accuracy) If less than 0.3 MPa of pressure is used, the rubber cushion may not function correctly. If oscillating end accuracy is required, use at pressure of 0.3 MPa or higher.

Back pressure may remain if using with all ports closed, potentially failing to push fully against the rubber cushion.

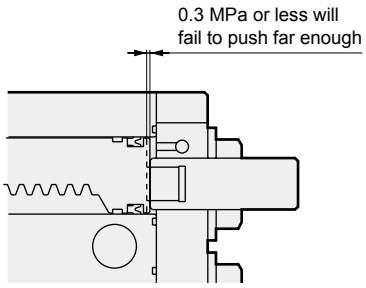

■ Pay attention to the proximity of cylinders, etc.

When installing two or more rotary actuators with switches in parallel, or if there is a magnetic substance such as a steel plate nearby, provide the following distances from the cylinder body surface. (The dimensions are the same for all sizes.)

Mutual magnetic interference may cause the switch to malfunction.

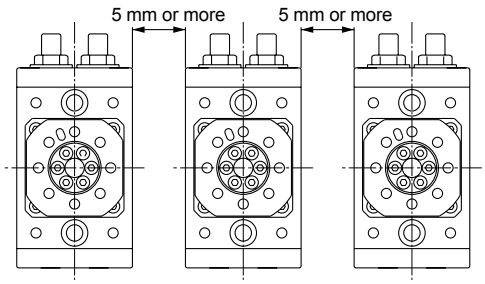

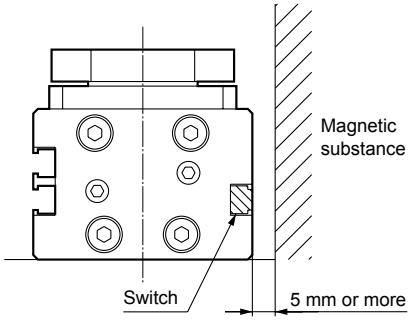

■ CKD's shock absorber is a repair part.

Replace it when the energy absorption performance has degraded or the operation is not smooth.

RV3*

Rotary actuator with vane mechanism

Oscillation/rotation drive

Torque size 0.12 to 206 N·m

Overview

Excellent durability with an incorporated switch is achieved. Vane rotary actuator with a wide variety of torque sizes.

Features

Enhanced series

A 270° oscillating angle has been added to the compact rotary actuator, increasing the freedom of system design.

High torque and space saving

High torque and space savings are realized by adding a double vane to the compact rotary actuator.

Easy-to-use oscillating origin

The oscillating origin can be selected from 45° or 90°, increasing the options for equipment installation. (Excluding sizes 30 and higher and 270° oscillating angle)

Variable oscillating angle added to series

This new addition is an angle adjusting with a stopper and fine adjusting screw that allow free angle setting from 30° to the max. oscillating angle, contributing to higher machine/equipment precision. (Excluding sizes 1 and 50 and over)

Usable in high temperatures

The ambient temperature can be set between -5 and 80°C if dry air which has been passed through an air dryer to remove moisture from the air is used. (Excluding switch sizes 30 and over)

CONTENTS

Series variation 1336

Compact rotary actuator with vane mechanism

- Standard (RV3$^{S}_{D}$) 1338
- With valve (RV3$^{SV}_{DW}$) 1350
- Angle variable (RV3$^{S}_{D}$A) 1354

Large vane rotary actuator

- Standard (RV3$^{S}_{D}$) 1364
- With valve (RV3$^{SV}_{DW}$) 1372
- Low hydraulic (RV3$^{S}_{D}$H) 1378

Units and options

- Flange bracket/foot bracket/key 1348
- Shock absorber (RVC) 1382
- Switch unit
  - Compact (standard, with valve) 1386
  - Compact (angle variable) 1388
  - Large 1390

Rotary actuator common repair parts list 1393
Rotary actuator common repair parts kit 1395
Selection guide 1397
Applications 1404
⚠ Safety precautions 1406

Rotary actuator (with vane mechanism) RV3* Series

LCM
LCR
LCG
LCW
LCX
STM
STG
STS/STL
STR2
UCA2
ULK*
JSK/M2
JSG
JSC3/JSC4
USSD
UFCD
USC
UB
JSB3
LMB
LML
HCM
HCA
LBC
CAC4
UCAC2
CAC-N
UCAC-N
RCS2
RCC2
PCC
SHC
MCP
GLC
MFC
BBS
RRC
GRC
RV3*
NHS
HRL
LN
Hand
Chuk
MecHnd/Chuk
ShkAbs
FJ
FK
SpdContr
Ending

● Compact (RV3*1 to RV3*30)

●: Standard, ◎: Option, ▒: Not available

Variation	Model No.		Vane	Effective torque (0.5 MPa) (N·m)	Oscillating angle 90°	100°	180°	270°	280°	With switch	Axial port position (Not available for types with switch) S	With flange bracket FA	With foot bracket LS	With shock absorber C	Page
Standard		RV3S1	Single	0.12	●		●	●			◎	◎	◎		1338
		RV3D1	Double	0.28	●						◎	◎	◎		
		RV3S3	Single	0.31	●		●	●		●	◎	◎	◎		
		RV3D3	Double	0.71	●					●	◎	◎	◎		
		RV3S10	Single	0.98	●		●	●		●	◎	◎	◎		
		RV3D10	Double	2.11	●					●	◎	◎	◎		
		RV3S20	Single	1.70	●		●	●		●	◎	◎	◎		
		RV3D20	Double	3.88	●					●	◎	◎	◎		
		RV3S30	Single	3.19	●		●	●		●		◎	◎		
		RV3D30	Double	7.70	●					●		◎	◎		
With valve	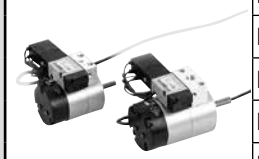	RV3S$^{V}_{W}$10	Single	0.98	●		●	●		●		◎	◎		1350
		RV3D$^{V}_{W}$10	Double	2.11	●					●		◎	◎		
		RV3S$^{V}_{W}$20	Single	1.70	●		●	●		●		◎	◎		
		RV3D$^{V}_{W}$20	Double	3.88	●					●		◎	◎		
		RV3S$^{V}_{W}$30	Single	3.19	●		●	●		●		◎	◎		
		RV3D$^{V}_{W}$30	Double	7.70	●					●		◎	◎		
Angle variable		RV3SA3	Single	0.31			● (30 to 180° variable)			●		◎	◎		1354
		RV3DA3	Double	0.71	● (30 to 90° variable)					●		◎	◎		
		RV3SA10	Single	0.98			● (30 to 180° variable)			●		◎	◎		
		RV3DA10	Double	2.11	● (30 to 90° variable)					●		◎	◎		
		RV3SA20	Single	1.70			● (30 to 180° variable)			●		◎	◎		
		RV3DA20	Double	3.88	● (30 to 90° variable)					●		◎	◎		
		RV3SA30	Single	3.19				● (30 to 270° variable)		●		◎	◎		
		RV3DA30	Double	7.70	● (30 to 90° variable)					●		◎	◎		

LCM
LCR
LCG
LCW
LCX
STM
STG
STS/STL
STR2
UCA2
ULK*
JSK/M2
JSG
JSC3/JSC4
USSD
UFCD
USC
UB
JSB3
LMB
LML
HCM
HCA
LBC
CAC4
UCAC2
CAC-N
UCAC-N
RCS2
RCC2
PCC
SHC
MCP
GLC
MFC
BBS
RRC
GRC
RV3*
NHS
HRL
LN
Hand
Chuk
MecHnd/Chuk
ShkAbs
FJ
FK
SpdContr
Ending

● Large (RV3*50 to RV3*800)

●: Standard, ◎: Option, ▒: Not available

Variation	Model No.		Vane	Effective torque (0.5 MPa) (N·m)	Oscillating angle 90°	100°	180°	270°	280°	With switch	Axial port position S	With flange bracket FA	With foot bracket LS	With shock absorber C	Page
Standard		RV3S50	Single	4.7	●		●	●	●	●		◎	◎	◎	1364
		RV3D50	Double	10.1	●	●				●		◎	◎	◎	
		RV3S150	Single	14.7	●		●	●	●	●		◎	◎	◎	
		RV3D150	Double	34.3	●	●				●		◎	◎	◎	
		RV3S300	Single	27.9	●		●	●	●	●			◎	◎	
		RV3D300	Double	66.6	●	●				●			◎	◎	
		RV3S800	Single	102	●		●	●	●	●			◎	◎	
		RV3D800	Double	206	●	●				●			◎	◎	
With valve	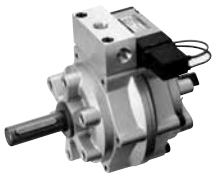	RV3S$^{V}_{W}$50	Single	4.7	●		●	●	●	●		◎	◎	◎	1372
		RV3D$^{V}_{W}$50	Double	10.1	●	●				●		◎	◎	◎	
		RV3S$^{V}_{W}$150	Single	14.7	●		●	●	●	●		◎	◎	◎	
		RV3D$^{V}_{W}$150	Double	34.3	●	●				●		◎	◎	◎	
		RV3S$^{V}_{W}$300	Single	27.9	●		●	●	●	●			◎	◎	
		RV3D$^{V}_{W}$300	Double	66.6	●	●				●			◎	◎	
Low hydraulic		RV3SH50	Single	4.7	●		●	●	●	●		◎	◎	◎	1378
		RV3DH50	Double	10.1	●	●				●		◎	◎	◎	
		RV3SH150	Single	14.7	●		●	●	●	●		◎	◎	◎	
		RV3DH150	Double	34.3	●	●				●		◎	◎	◎	
		RV3SH300	Single	27.9	●		●	●	●	●			◎	◎	
		RV3DH300	Double	66.6	●	●				●			◎	◎	
		RV3SH800	Single	102	●		●	●	●	●			◎	◎	
		RV3DH800	Double	206	●	●				●			◎	◎	
Shock absorber		RVC50			●	●	●	●	●	———					1382
		RVC150			●	●	●	●	●	———					
		RVC300			●	●	●	●	●	———					

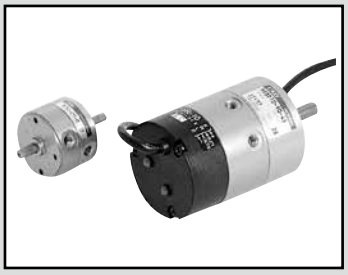

Compact rotary actuator with vane mechanism/standard

RV3$^{S}_{D}$ Series

- Torque: 1/3/10/20/30
- Oscillating angle: 90°, 180°, 270°

JIS symbol

Specifications

● Single vane mechanism

Item		RV3S														
Size		1			3			10			20			30		
Effective torque	N·m	0.12			0.31			0.98			1.70			3.19		
Actuation		Single vane														
Working fluid		Compressed air														
Max. working pressure	MPa	0.7 (≈100 psi, 7 bar)									1.0 (≈150 psi, 10 bar)					
Min. working pressure	MPa	0.2 (≈29 psi, 2 bar)														
Proof pressure	MPa	1.05 (≈150 psi, 10.5 bar)									1.5 (≈220 psi, 15 bar)					
Ambient temperature	°C	-5 (23°F) to 80 (176°F) *3												-5 (23°F) to 60 (140°F)		
Port size		M5												Rc1/8		
Oscillating angle tolerance	°	90^{+4}_{0}	180^{+4}_{0}	270^{+4}_{0}	90^{+4}_{0}	180^{+4}_{0}	270^{+4}_{0}	90^{+4}_{0}	180^{+4}_{0}	270^{+4}_{0}	90^{+4}_{0}	180^{+4}_{0}	270^{+4}_{0}	90^{+3}_{0}	180^{+3}_{0}	270^{+3}_{0}
Oscillating origin	°	45, 90		45	45, 90		45	45, 90		45	45, 90		45	45		
Allowable absorbed energy *1	mJ	0.6			1.5			3			15			25		
Max. operating frequency *2	cycle/min	300	180	96	240	150	60	240	150	90	210	120	84	180	90	60
Volumetric capacity	cm^3	1.4	1.4	1.5	3.4		4	9.8		12	17		21	37		43
Allowable radial load	N	30			40			50			300			400		
Allowable thrust load	N	3			4						25			30		
Weight	kg	0.036			0.07			0.14			0.25			0.47		0.46
Switch unit weight	kg	-			0.04			0.04			0.05			0.05		
Lubrication		Not required (use turbine oil class 1 ISO VG32 if necessary for lubrication)														

● Double vane mechanism

Item		RV3D					
Size		1	3	10	20	30	
Effective torque	N·m	0.28	0.71	2.11	3.88	7.70	
Actuation		Double vane					
Working fluid		Compressed air					
Max. working pressure	MPa	0.7 (≈100 psi, 7 bar)			1.0 (≈150 psi, 10 bar)		
Min. working pressure	MPa	0.2 (≈29 psi, 2 bar)					
Proof pressure	MPa	1.05 (≈150 psi, 10.5 bar)			1.5 (≈220 psi, 15 bar)		
Ambient temperature	°C	-5 (23°F) to 80 (176°F) *3				-5 (23°F) to 60 (140°F)	
Port size		M5				Rc1/8	
Oscillating angle tolerance	°	90^{+4}_{0}				90^{+3}_{0}	
Oscillating origin	°	45					
Allowable absorbed energy *1	mJ	0.6	1.5	3	15	25	
Max. operating frequency *2	cycle/min	300	240		210	180	
Volumetric capacity	cm^3	1.1	2.8	8.1	15	34	
Allowable radial load	N	30	40	50	300	400	
Allowable thrust load	N	3	4		25	30	
Weight	kg	0.037	0.072	0.14	0.26	0.48	
Switch unit weight	kg	-	0.04	0.04	0.05	0.05	
Lubrication		Not required (use turbine oil ISO VG32 if necessary for lubrication)					

*1 : Calculate the allowable energy with allowable inertia energy of the shaft of the rotary actuator as follows.
(Allowable energy) ≥ $1/2I\omega^2 \times 10^3$ (refer to page 1398 for details.)
*2 : The max. operating frequency is at a supply pressure of 0.5 MPa [without load].
*3 : 5 to 60°C when switch is provided.
*4 : A key is attached with the rotary actuator with keyway.
*5 : Contact CKD for products other than standard specifications.

Switch specifications

Item	Proximity switch
	SR-* (-U)
Applications	For programmable controller/relay/IC circuit/compact solenoid valve
Output method	NPN output
Power supply voltage	5 VDC to 30 VDC
Load voltage/current	5 to 30 VDC, 200 mA or less
Current consumption	20 mA or less with 24 VDC
Internal voltage drop	1.5 V or less
Indicator lamp	LED (Lit when ON)
Leakage current	10 μA or less
Lead wire length	1 m (oil resistant vinyl cabtyre cable 4-conductor 0.2 mm^2)
Shock resistance	490 m/s^2
Insulation resistance	100 MΩ or more with 500 V megger
Withstand voltage	No failure after 1 minute of 1,000 VAC application.
Ambient temperature	5 to 60°C
Degree of protection	IEC standards IP67, JIS C0920 (water tight)

* mark indicates a rotary actuator size. (3, 10, 20, 30)

Operational principle

● Single vane

1. Configured with vane sliding on the internal body surface, integrated shaft, and shoe (stopper).
2. Air from port A pushes vane, rotates shaft, and generates torque.
3. Air in opposite chamber is exhausted from port B, and the shaft rotates clockwise.
4. Vane stops when it contacts the shoe.
5. Air supply from port B causes counterclockwise rotation in the same manner.

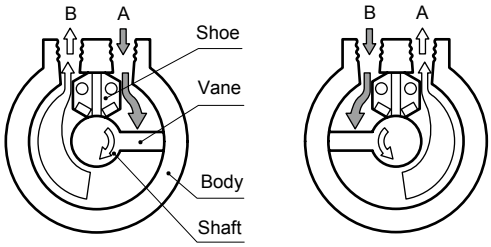

● Double vane

1. Configured with two vanes sliding on the internal body surface, integrated shaft, and two shoes (stoppers).
2. Air from port A pushes vane, goes through passage in shaft, pushes another vane, turns shaft, and finally generates torque.
3. Rotates in the same way as the single vane.

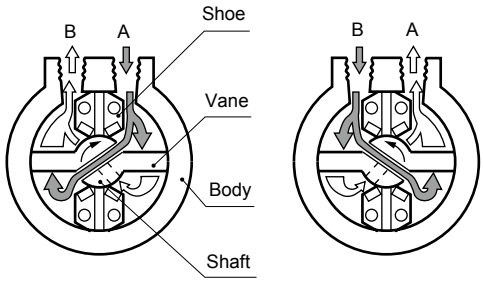

LCM
LCR
LCG
LCW
LCX
STM
STG
STS/STL
STR2
UCA2
ULK*
JSK/M2
JSG
JSC3/JSC4
USSD
UFCD
USC
UB
JSB3
LMB
LML
HCM
HCA
LBC
CAC4
UCAC2
CAC-N
UCAC-N
RCS2
RCC2
PCC
SHC
MCP
GLC
MFC
BBS
RRC
GRC
RV3*
NHS
HRL
LN
Hand
Chuk
MecHnd/Chuk
ShkAbs
FJ
FK
SpdContr
Ending

How to order

● Compact rotary actuator (standard) RV3*

RV3S 3 - 90 - 45 - SR-U - FA

Ⓐ Model No.
Ⓑ Nominal size
Ⓒ Oscillating angle
Ⓓ Oscillating origin
Ⓔ Switch
Ⓕ Option (*1, *2)

Code	Description	Ⓐ Model No. Single vane mechanism: RV3S	Ⓐ Model No. Double vane mechanism: RV3D
Ⓑ Nominal size			
1	Effective torque 0.5 MPa	0.12 N·m	0.27 N·m
3		0.31 N·m	0.71 N·m
10		0.98 N·m	2.11 N·m
20		1.70 N·m	3.88 N·m
30		3.19 N·m	7.7 N·m

Code	Description	RV3S	RV3D
Ⓒ Oscillating angle			
90	90°	●	●
180	180°	●	
270	270°	●	

Ⓓ Oscillating origin

	Nominal size	1	3	10	20	30	1	3	10	20	30
45	45°	●	●	●	●	●	●	●	●	●	●
90	90° (excluding oscillating angle 270°)	●	●	●	●						

Ⓔ Switch

	Nominal size	1	3	10	20	30	1	3	10	20	30
Blank	Without switch	●	●	●	●	●	●	●	●	●	●
SR	With axial lead wire switch		●	●	●	●		●	●	●	●
SR-U	With radial lead wire switch		●	●	●	●		●	●	●	●

Ⓕ Option

	Nominal size	1	3	10	20	30	1	3	10	20	30
Blank	No option	●	●	●	●	●	●	●	●	●	●
S	Axial port position	●	●	●	●		●	●	●	●	
FA	With flange bracket	●	●	●	●	●	●	●	●	●	●
LS	With foot bracket	●	●	●	●	●	●	●	●	●	●

⚠ Precautions for model No. selection

*1 : The type with switch is not available for the axial port position direction "S".
*2 : The mounting bracket (FA, LS) is attached at shipment. Refer to pages 1348 and 1349 for dimensions.

[Example of model No.]

RV3S3-90-45-SR-U-FA

Model: Compact rotary actuator

Ⓐ Model No. : Single vane mechanism RV3S
Ⓑ Nominal size : 3
Ⓒ Oscillating angle : 90°
Ⓓ Oscillating origin : 45°
Ⓔ Switch : With radial lead wire switch
Ⓕ Option : With flange bracket

● How to order switch unit

RV3S - SR-3 - 90 - 45 - U

Ⓐ Model
Ⓑ Oscillating angle
Ⓒ Oscillating origin
Ⓓ Lead wire direction

Code	Description
Ⓐ Model	
SR-3	Applicable actuator: RV3$^{S}_{D}$3
SR-10	Applicable actuator: RV3$^{S}_{D}$10
SR-20	Applicable actuator: RV3$^{S}_{D}$20
SR-30	Applicable actuator: RV3$^{S}_{D}$30

Code	Description
Ⓑ Oscillating angle	
90	90°
180	180°
270	270°

Ⓒ Oscillating origin

	Model	SR-3	SR-10	SR-20	SR-30
45	45°	●	●	●	●
90	90°	●	●	●	

Code	Description
Ⓓ Lead wire direction	
Blank	With axial lead wire switch
U	With radial lead wire switch

[Example of model No.]

RV3S-SR-3-90-45-U

Model: Switch unit

Ⓐ Model : For RV3S3
Ⓑ Oscillating angle : 90°
Ⓒ Oscillating origin : 45°
Ⓓ Lead wire outlet direction : Radial lead wire

Oscillating origin position

● Oscillating origin 45°
RV3$^{S}_{D}$1 to 30

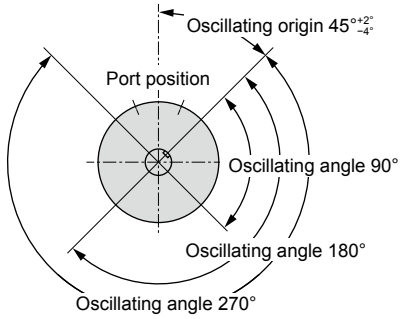

● Oscillating origin 90°
RV3S1 to 20

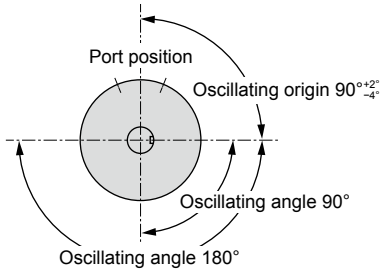

*1 : Tolerance of oscillating origin is based on mounting screw position.
*2 : Deflection of torsion angle between keyway on longer axis side (or cut plane) and square on shorter axis side within 1.5°.

Output characteristics graph (effective torque)

● RV3$^{S}_{D}$1 to 10

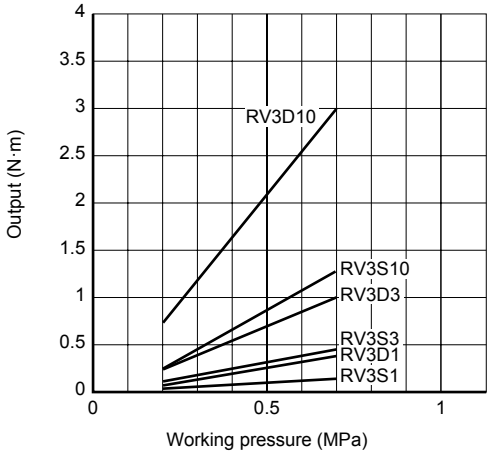

● RV3$^{S}_{D}$20, 30

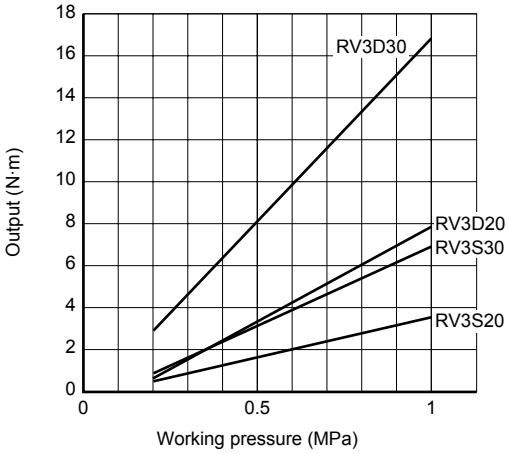

Output table (effective torque)

(N·m)

Working pressure (MPa) / Model No.		0.2	0.3	0.4	0.5	0.6	0.7	0.8	0.9	1.0
Single vane	RV3S1	-0.04	0.07	-0.10	-0.12	-0.15	-0.18	-	-	-
	RV3S3	0.1	0.17	0.24	0.31	0.38	0.45	-	-	-
	RV3S10	0.35	0.56	0.75	0.98	1.2	1.39	-	-	-
	RV3S20	0.59	0.95	1.33	1.7	2.1	2.49	2.87	3.26	3.68
	RV3S30	1.1	1.8	2.5	3.19	4.1	4.8	5.8	6.5	7.2
Double vane	RV3D1	0.10	0.16	0.22	0.28	0.34	0.40	-	-	-
	RV3D3	0.25	0.39	0.54	0.71	0.86	1.01	-	-	-
	RV3D10	0.76	1.17	1.62	2.11	2.54	3.03	-	-	-
	RV3D20	1.4	2.22	3.06	3.88	4.7	5.53	6.33	7.17	8.07
	RV3D30	2.7	4.4	6	7.7	9.5	11.2	12.99	14.8	16.6

Oscillating time setting

1. Use oscillating time taking the ranges in the table below as a guide.

Compact rotary actuator

Model No.	Oscillating angle		
	90°	180°	270°
RV3$^{S}_{D}$1	0.03 to 0.3	0.06 to 0.6	0.09 to 0.9
RV3$^{S}_{D}$3	0.04 to 0.8	0.08 to 1.6	0.12 to 2.4
RV3$^{S}_{D}$10	0.045 to 0.9	0.09 to 1.8	0.135 to 2.7
RV3$^{S}_{D}$20	0.05 to 1.0	0.10 to 2	0.15 to 3
RV3$^{S}_{D}$30	0.07 to 0.7	0.14 to 1.4	0.21 to 2.1

LCM
LCR
LCG
LCW
LCX
STM
STG
STS/STL
STR2
UCA2
ULK*
JSK/M2
JSG
JSC3/JSC4
USSD
UFCD
USC
UB
JSB3
LMB
LML
HCM
HCA
LBC
CAC4
UCAC2
CAC-N
UCAC-N
RCS2
RCC2
PCC
SHC
MCP
GLC
MFC
BBS
RRC
GRC
RV3*
NHS
HRL
LN
Hand
Chuk
MecHnd/Chuk
ShkAbs
FJ
FK
SpdContr
Ending

Internal structure and parts list

● RV3S1 to 30
Oscillating origin: 45°

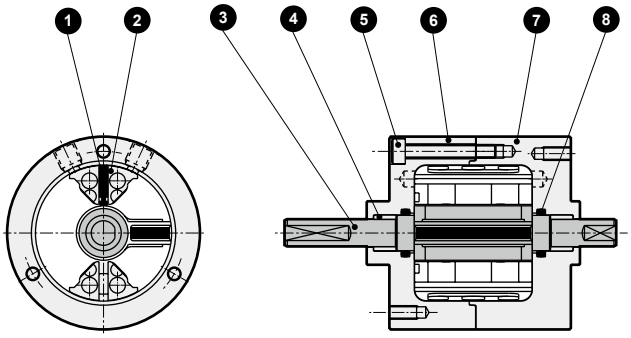

● RV3S1 to 30
Oscillating origin: 90°

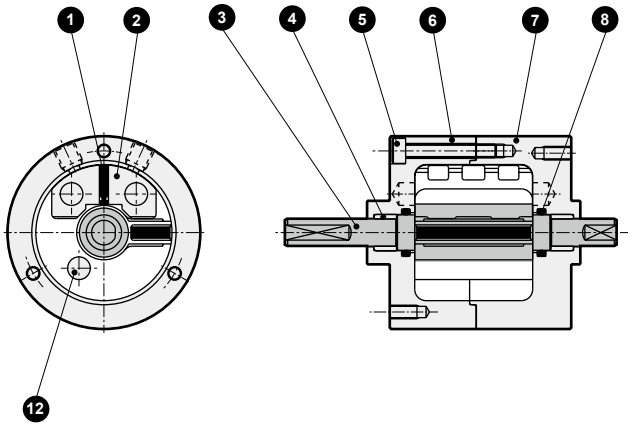

● RV3D1 to 10

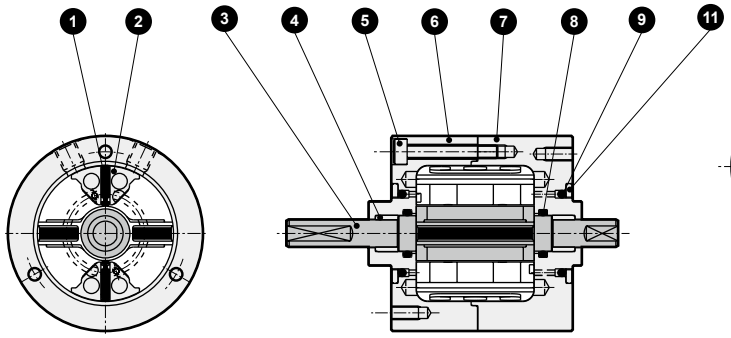

● RV3D20

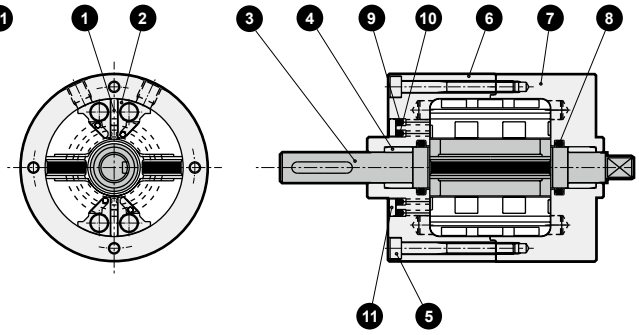

● RV3D30

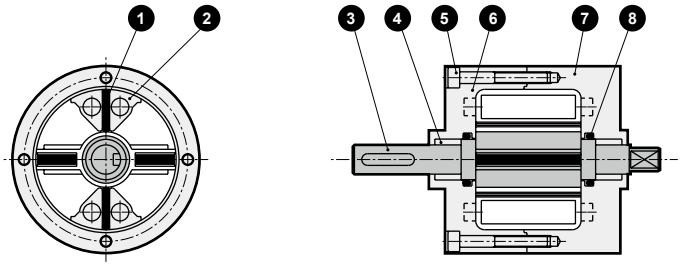

No.	Part name	Material	No.	Part name	Material
1	Shoe sealant	Nitrile rubber	7	Body B	Aluminum alloy
2	Shoe	Resin	8	O-ring	Nitrile rubber
3	Vane shaft	Steel + resin + nitrile rubber	9	O-ring	Nitrile rubber
4	Bearing	Sintering oil impregnated material	10	O-ring	Nitrile rubber
5	Mounting bolt	Steel	11	Plate	Steel
6	Body A	Aluminum alloy	12	Stopper pin	Steel

Refer to page 1393 for the repair parts list.

Dimensions

● RV3$^{S}_{D}$1

■ Oscillating origin 45°

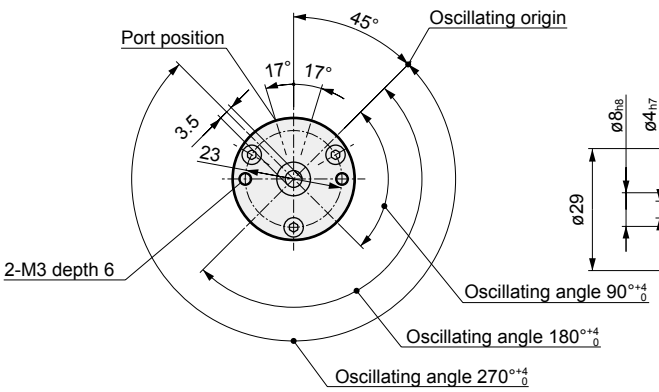

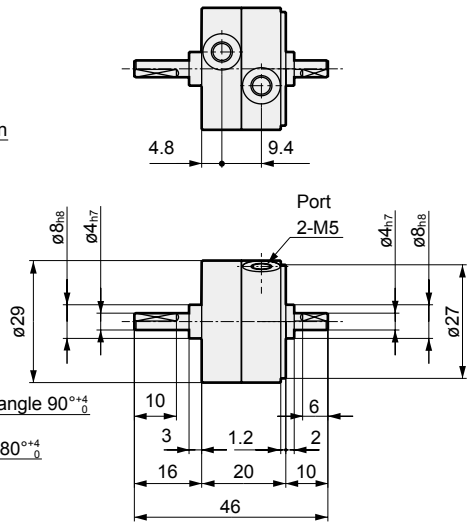

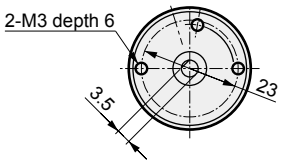

■ Oscillating origin 90°

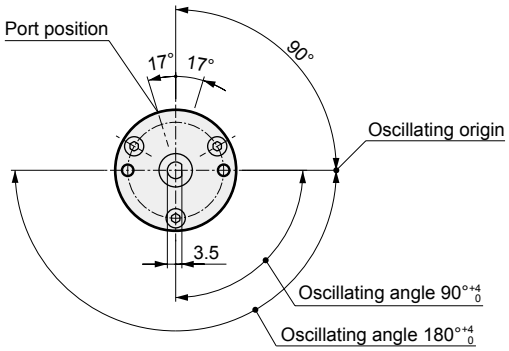

● S type
(Axial port position)

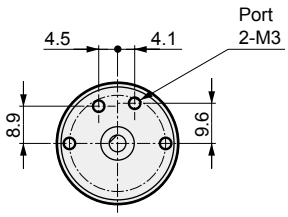

LCM
LCR
LCG
LCW
LCX
STM
STG
STS/STL
STR2
UCA2
ULK*
JSK/M2
JSG
JSC3/JSC4
USSD
UFCD
USC
UB
JSB3
LMB
LML
HCM
HCA
LBC
CAC4
UCAC2
CAC-N
UCAC-N
RCS2
RCC2
PCC
SHC
MCP
GLC
MFC
BBS
RRC
GRC
RV3*
NHS
HRL
LN
Hand
Chuk
MecHnd/Chuk
ShkAbs
FJ
FK
SpdContr
Ending

Dimensions

● RV3$^{S}_{D}$3 CAD

■ Oscillating origin 45°

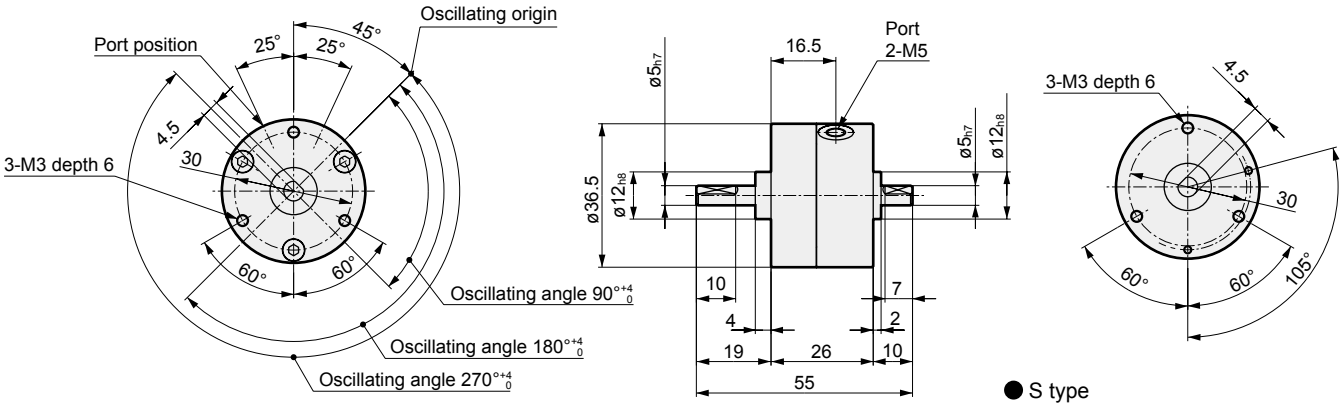

● S type
(Axial port position)

■ Oscillating origin 90°

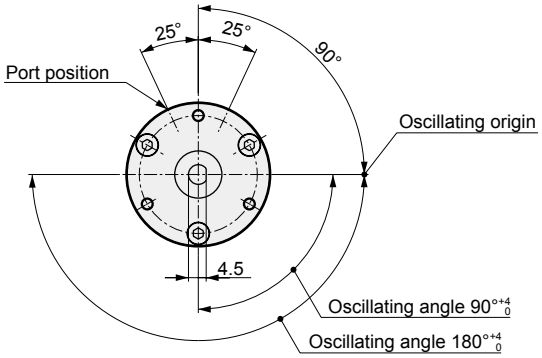

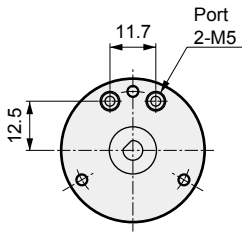

● RV3$^{S}_{D}$3-*-SR(U)

■ Axial lead wire

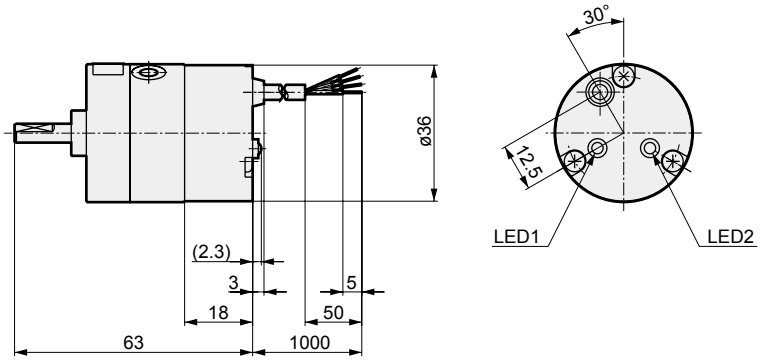

■ Radial lead wire

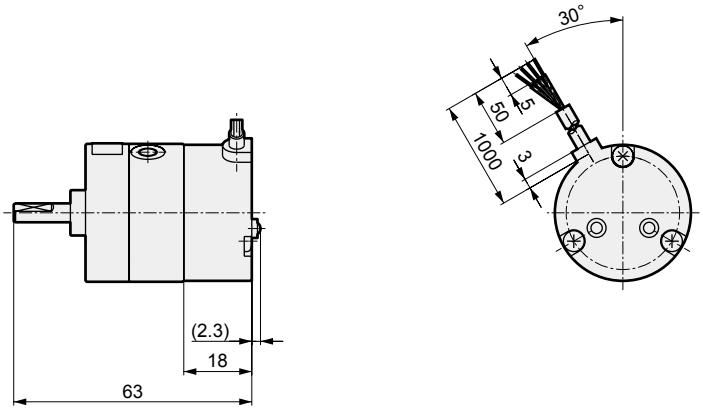

LCM
LCR
LCG
LCW
LCX
STM
STG
STS/STL
STR2
UCA2
ULK*
JSK/M2
JSG
JSC3/JSC4
USSD
UFCD
USC
UB
JSB3
LMB
LML
HCM
HCA
LBC
CAC4
UCAC2
CAC-N
UCAC-N
RCS2
RCC2
PCC
SHC
MCP
GLC
MFC
BBS
RRC
GRC
RV3*
NHS
HRL
LN
Hand
Chuk
MecHnd/Chuk
ShkAbs
FJ
FK
SpdContr
Ending

Dimensions

● RV3$^{S}_{D}$10 CAD

■ Oscillating origin 45°

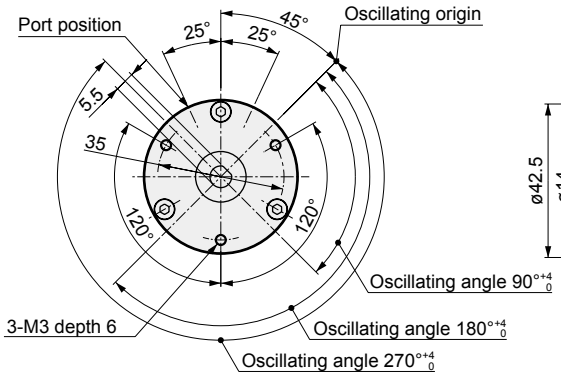

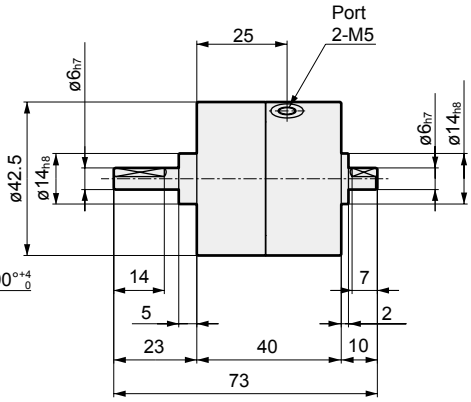

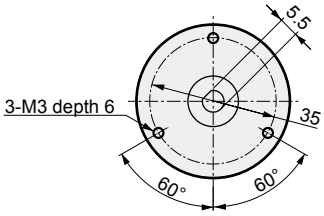

● S type
(Axial port position)

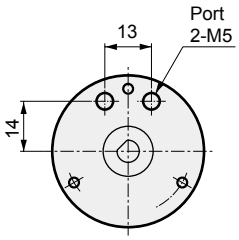

■ Oscillating origin 90°

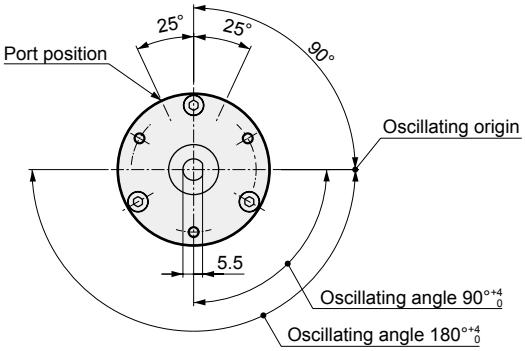

● RV3$^{S}_{D}$10-*-SR(U)

■ Axial lead wire

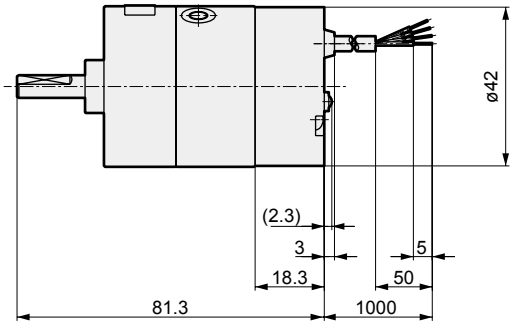

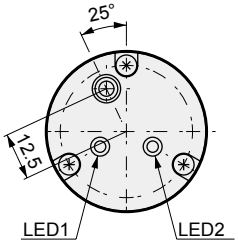

■ Radial lead wire

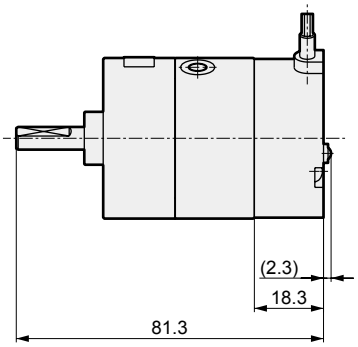

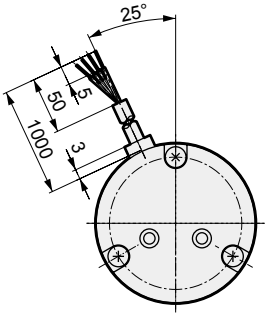

LCM
LCR
LCG
LCW
LCX
STM
STG
STS/STL
STR2
UCA2
ULK*
JSK/M2
JSG
JSC3/JSC4
USSD
UFCD
USC
UB
JSB3
LMB
LML
HCM
HCA
LBC
CAC4
UCAC2
CAC-N
UCAC-N
RCS2
RCC2
PCC
SHC
MCP
GLC
MFC
BBS
RRC
GRC
RV3*
NHS
HRL
LN
Hand
Chuk
MecHnd/Chuk
ShkAbs
FJ
FK
SpdContr
Ending

Dimensions

● RV3 S/D 20

■ Oscillating origin 45°

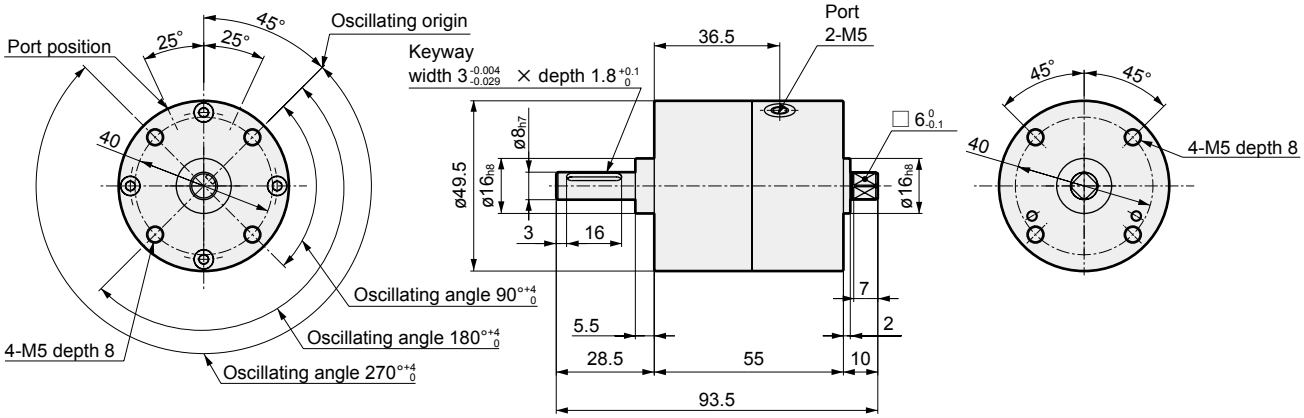

● S type
(Axial port position)

■ Oscillating origin 90°

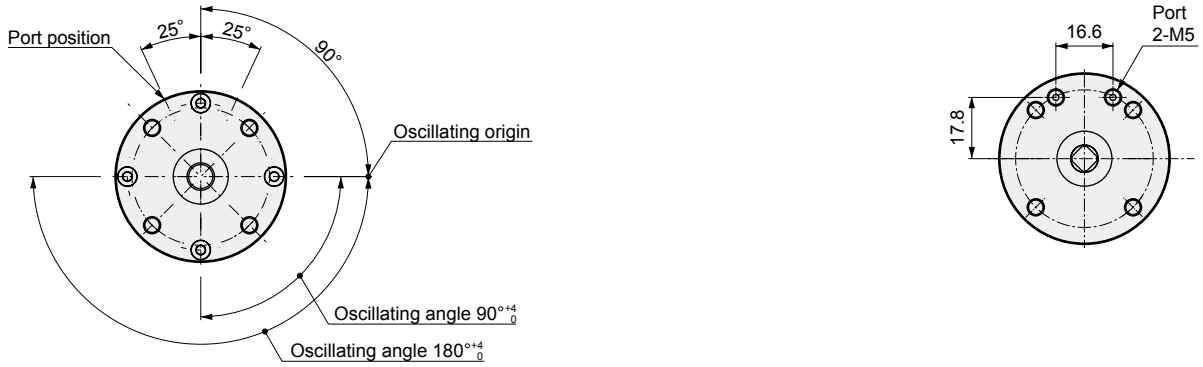

● RV3 S/D 20-*-SR(U)

■ Axial lead wire

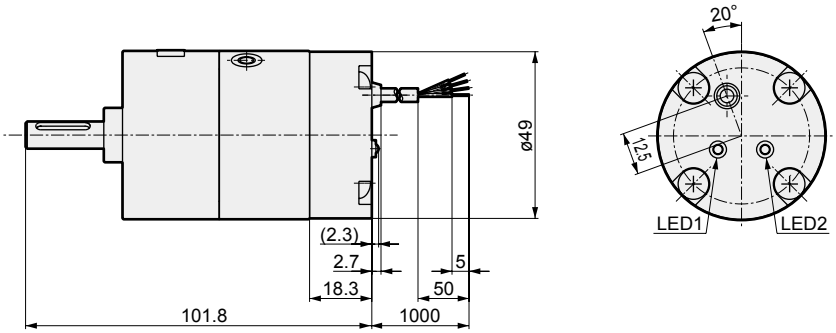

■ Radial lead wire

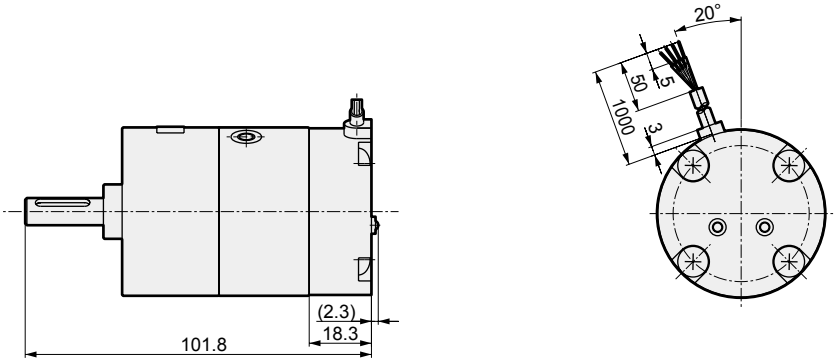

LCM
LCR
LCG
LCW
LCX
STM
STG
STS/STL
STR2
UCA2
ULK*
JSK/M2
JSG
JSC3/JSC4
USSD
UFCD
USC
UB
JSB3
LMB
LML
HCM
HCA
LBC
CAC4
UCAC2
CAC-N
UCAC-N
RCS2
RCC2
PCC
SHC
MCP
GLC
MFC
BBS
RRC
GRC
RV3*
NHS
HRL
LN
Hand
Chuk
MecHnd/Chuk
ShkAbs
FJ
FK
SpdContr
Ending

Dimensions

● RV3 S/D 30 CAD

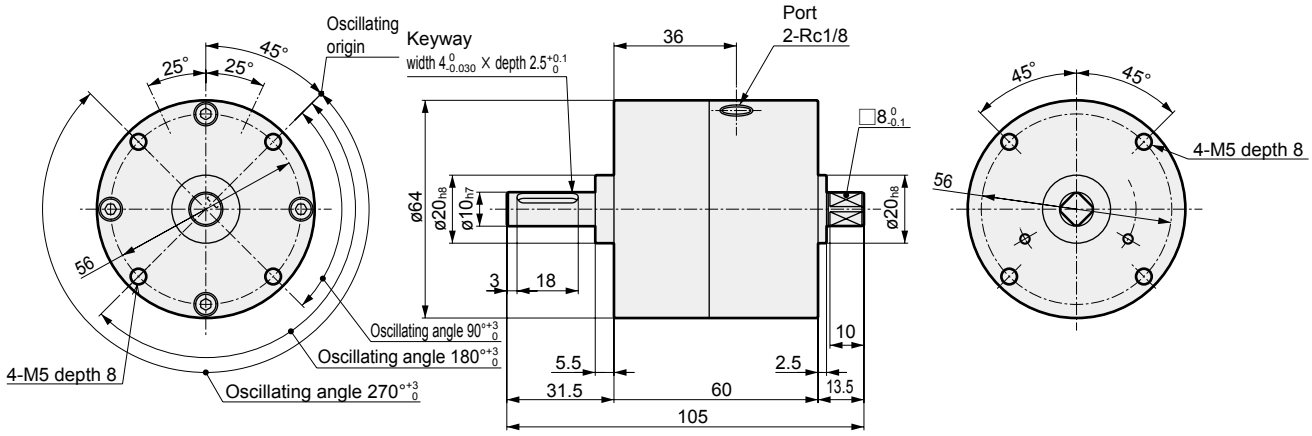

● RV3 S/D 30-*-SR(U)

■ Axial lead wire

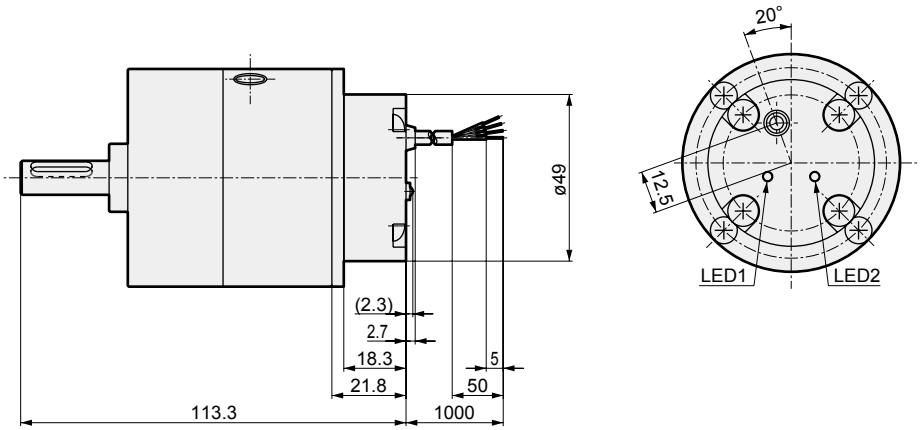

■ Radial lead wire

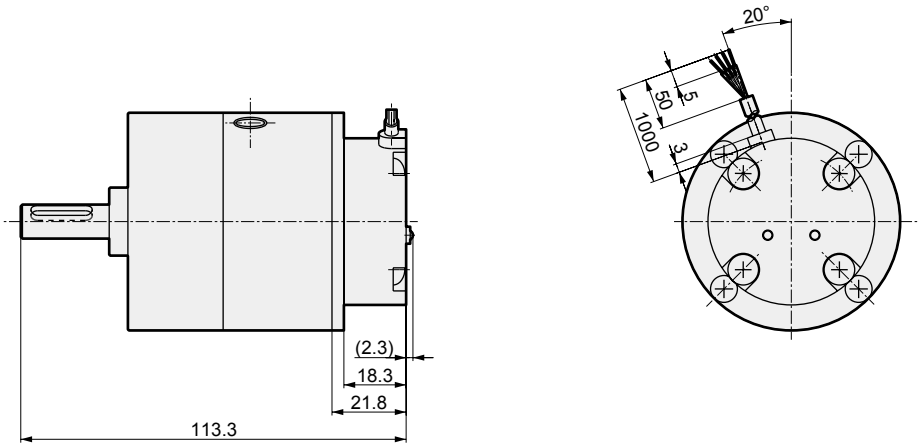

LCM
LCR
LCG
LCW
LCX
STM
STG
STS/STL
STR2
UCA2
ULK*
JSK/M2
JSG
JSC3/JSC4
USSD
UFCD
USC
UB
JSB3
LMB
LML
HCM
HCA
LBC
CAC4
UCAC2
CAC-N
UCAC-N
RCS2
RCC2
PCC
SHC
MCP
GLC
MFC
BBS
RRC
GRC
RV3*
NHS
HRL
LN
Hand
Chuk
MecHnd/Chuk
ShkAbs
FJ
FK
SpdContr
Ending

Options/accessories

Flange bracket/foot bracket

How to order

● Flange bracket

Model – FA

Flange bracket

Model	Compatibility
RVS1	RV3 S/D 1
RVS3	RV3 S/D 3
RVS10	RV3 S/D 10
RVS20	RV3 S/D 20
RVS30	RV3 S/D 30

● Foot bracket

Model – LS

Foot bracket

Model	Compatibility
RVS1	RV3 S/D 1
RVS3	RV3 S/D 3
RVS10	RV3 S/D 10
RVS20	RV3 S/D 20
RVS30	RV3 S/D 30

Dimensions

● RVS1-FA

Material: Steel
Zinc chromate treatment

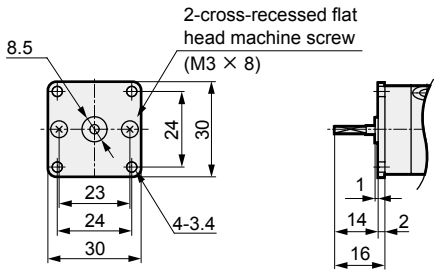

Weight: 0.01 kg

● RVS1-LS

Material: Steel
Zinc chromate treatment

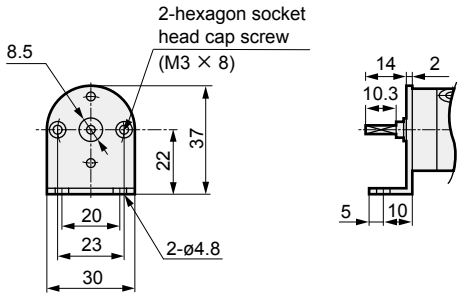

Weight: 0.02 kg

● RVS3-FA

Material: Steel
Zinc chromate treatment

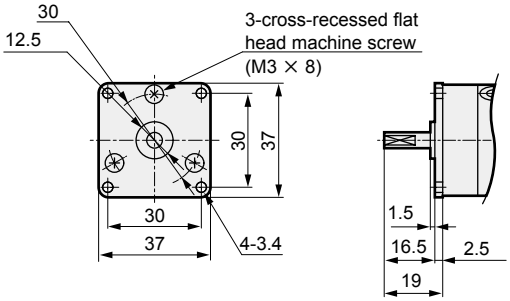

Weight: 0.03 kg

● RVS3-LS

Material: Steel
Zinc chromate treatment

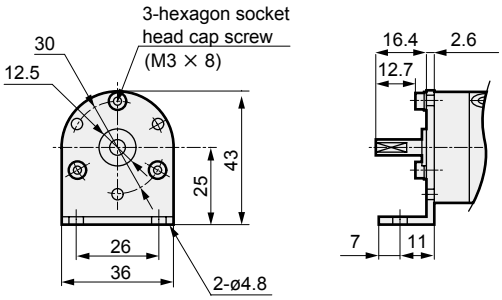

Weight: 0.04 kg

● RVS10-FA

Material: Steel
Zinc chromate treatment

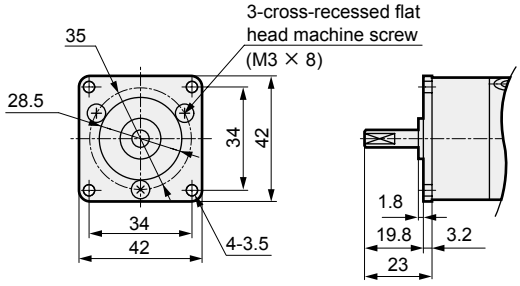

Weight: 0.03 kg

● RVS10-LS

Material: Steel
Zinc chromate treatment

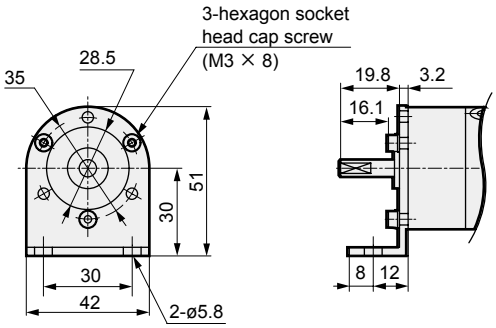

Weight: 0.05 kg

LCM
LCR
LCG
LCW
LCX
STM
STG
STS/STL
STR2
UCA2
ULK*
JSK/M2
JSG
JSC3/JSC4
USSD
UFCD
USC
UB
JSB3
LMB
LML
HCM
HCA
LBC
CAC4
UCAC2
CAC-N
UCAC-N
RCS2
RCC2
PCC
SHC
MCP
GLC
MFC
BBS
RRC
GRC
RV3*
NHS
HRL
LN
Hand
Chuk
MecHnd/Chuk
ShkAbs
FJ
FK
SpdContr
Ending

Flange bracket/foot bracket dimensions

● RVS20-FA

Material: Steel
Zinc chromate treatment

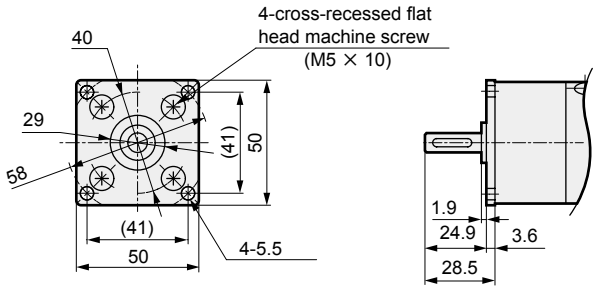

Weight: 0.05 kg

● RVS20-LS

Material: Steel
Zinc chromate treatment

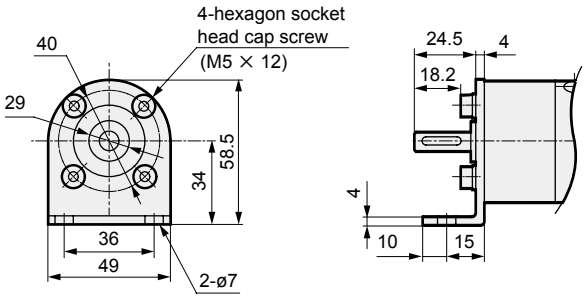

Weight: 0.09 kg

● RVS30-FA

Material: Steel
Zinc chromate treatment

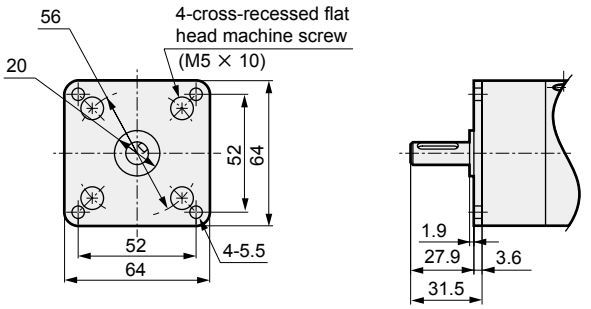

Weight: 0.10 kg

● RVS30-LS

Material: Steel
Zinc chromate treatment

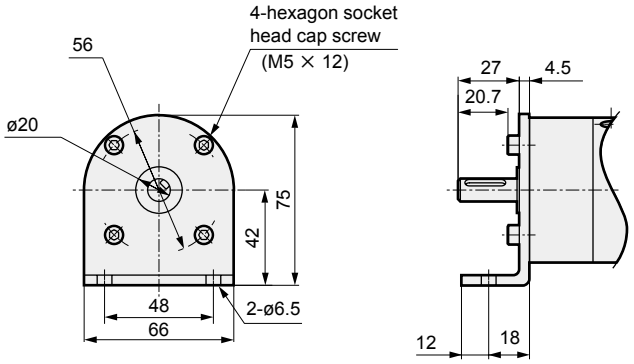

Weight: 0.19 kg

Key

Dimensions

The following keys are attached with the rotary actuator with keyway.

● JIS B1301 parallel key b x h x ℓ double round S45C

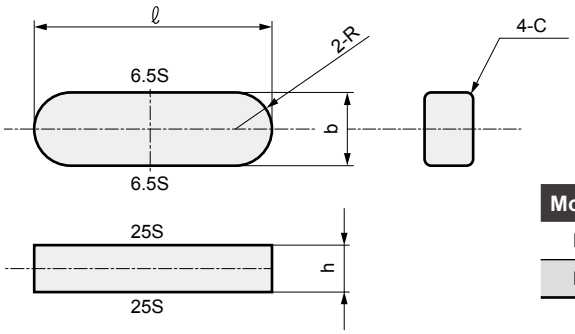

Unit: mm

Model No.	Nominal key	b	h	ℓ	C	R
RV3*20	3×3×16	$3^{0}_{-0.025}$	$3^{0}_{-0.025}$	$16^{0}_{-0.18}$	0.16 to 0.25 (R0.16 to 0.25)	1.5
RV3*30	4×4×18	$4^{0}_{-0.03}$	$4^{0}_{-0.03}$	$18^{0}_{-0.18}$	0.16 to 0.25 (R0.16 to 0.25)	2

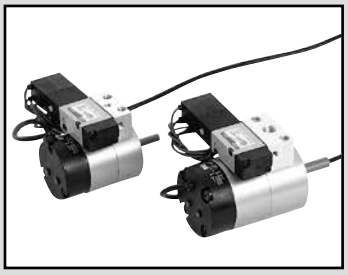

Compact rotary actuator with vane mechanism/with valve

RV3$^{S\,V}_{DW}$ Series

- Torque size: 10/20/30
- Oscillating angle: 90°, 180°, 270°

JIS symbol

Specifications

● Single vane mechanism

Item		RV3S$^{V}_{W}$								
Size		10			20			30		
Effective torque	N·m	0.98			1.70			3.19		
Actuation		Single vane								
Working fluid		Compressed air								
Max. working pressure	MPa	0.7 (≈100 psi, 7 bar)								
Min. working pressure	MPa	0.2 (≈29 psi, 2 bar)								
Proof pressure	MPa	1.05 (≈150 psi, 10.5 bar)								
Ambient temperature	°C	-5 (23°F) to 50 (122°F) *3								
Port size		M5			Rc1/8					
Oscillating angle tolerance	°	90^{+4}_{0}	180^{+4}_{0}	270^{+4}_{0}	90^{+4}_{0}	180^{+4}_{0}	270^{+4}_{0}	90^{+3}_{0}	180^{+3}_{0}	270^{+3}_{0}
Oscillating origin	°	45, 90		45	45, 90		45	45		
Allowable absorbed energy *1	mJ	3			15			25		
Max. operating frequency *2	cycle/min	240	150	90	210	120	84	180	90	60
Volumetric capacity	cm^3	9.8		12	17		21	37		43
Allowable radial load	N	50			300			400		
Allowable thrust load	N	4			25			30		
Weight	kg	0.28			0.37			0.59		0.58
Switch unit weight	kg	0.04			0.05			0.05		
Lubrication		Not required (use turbine oil ISO VG32 if necessary for lubrication)								

● Double vane mechanism

Item		RV3D$^{V}_{W}$		
Size		10	20	30
Effective torque *1	N·m	2.11	3.88	7.70
Actuation		Double vane		
Working fluid		Compressed air		
Max. working pressure	MPa	0.7 (≈100 psi, 7 bar)		
Min. working pressure	MPa	0.2 (≈29 psi, 2 bar)		
Proof pressure	MPa	1.05 (≈150 psi, 10.5 bar)		
Ambient temperature	°C	-5 (23°F) to 50 (122°F) *3		
Port size		M5	Rc1/8	
Oscillating angle tolerance	°	90^{+4}_{0}		90^{+3}_{0}
Oscillating origin	°	45		
Allowable absorbed energy *1	mJ	3	15	25
Max. operating frequency *2	cycle/min	240	210	180
Volumetric capacity	cm^3	8.1	15	34
Allowable radial load	N	50	300	400
Allowable thrust load	N	4	25	30
Weight	kg	0.28	0.38	0.60
Switch unit weight	kg	0.04	0.05	0.05
Lubrication		Not required (use turbine oil ISO VG32 if necessary for lubrication)		

*1 : Calculate the allowable energy with allowable inertia energy of the shaft of the rotary actuator as follows.
(Allowable energy) ≥ $1/2I\omega^2 \times 10^3$ (refer to page 1398 for details.)
*2 : The max. operating frequency is at a supply pressure of 0.5 MPa [without load].
*3 : 5 to 50°C when switch is provided.
*4 : A key is attached with the rotary actuator with keyway.
*5 : Contact CKD for products other than standard specifications.

Valve specifications

Item		Specifications (4KB1 Series)		
Rated voltage	V	100 VAC(50/60 Hz)	200 VAC(50/60 Hz)	24 VDC
Starting current	A	0.056/0.044	0.034/0.026	0.075
Holding current	A	0.028/0.022	0.017/0.013	
Power consumption	W	1.8/1.4	2.1/1.6	1.8
Voltage fluctuation range		±10%		
Thermal class		Class B molded coil		

*1 : 100 VAC and 200 VAC are available with 110 VAC and 220 VAC (60 Hz).
*2 : Refer to “Pneumatic Valves (CB-023SA)” for details on valves.

Switch specifications

Item	Proximity switch
	SR-*(-U)
Applications	For programmable controller/relay/IC circuit/compact solenoid valve
Output method	NPN output
Power supply voltage	5 VDC to 30 VDC
Load voltage/current	5 to 30 VDC, 200 mA or less
Current consumption	20 mA or less with 24 VDC
Internal voltage drop	1.5 V or less
Indicator lamp	LED (Lit when ON)
Leakage current	10 μA or less
Lead wire length	1 m (oil resistant vinyl cabtyre cable 4-conductor 0.2 mm^2)
Shock resistance	490 m/s^2
Insulation resistance	100 MΩ or more with 500 V megger
Withstand voltage	No failure after 1 minute of 1,000 VAC application.
Ambient temperature	5 to 60°C
Degree of protection	IEC standards IP67, JIS C0920 (water tight)

* mark indicates a rotary actuator size. (10, 20, 30)

LCM
LCR
LCG
LCW
LCX
STM
STG
STS/STL
STR2
UCA2
ULK*
JSK/M2
JSG
JSC3/JSC4
USSD
UFCD
USC
UB
JSB3
LMB
LML
HCM
HCA
LBC
CAC4
UCAC2
CAC-N
UCAC-N
RCS2
RCC2
PCC
SHC
MCP
GLC
MFC
BBS
RRC
GRC
RV3*
NHS
HRL
LN
Hand
Chuk
MecHnd/Chuk
ShkAbs
FJ
FK
SpdContr
Ending

How to order

● Compact rotary actuator (with valve) RV3*V/W

RV3S V 10 - 90 - 45 - 1 - SR-U - LS

Ⓐ Model No.
Ⓑ Valve
Ⓒ Nominal size
Ⓓ Oscillating angle
Ⓔ Oscillating origin
Ⓕ Valve voltage
Ⓖ Switch
Ⓗ Option (*1)

Code	Description	Ⓐ Model No. Single vane mechanism: RV3S	Ⓐ Model No. Double vane mechanism: RV3D
Ⓑ Valve			
V	Single solenoid	●	●
W	Double solenoid	●	●
Ⓒ Nominal size			
10	Effective torque 0.5 MPa	0.98 N·m	2.11 N·m
20		1.70 N·m	3.88 N·m
30		3.19 N·m	7.7 N·m
Ⓓ Oscillating angle			
90	90°	●	●
180	180°	●	
270	270°	●	

Ⓔ Oscillating origin

Nominal size		10	20	30	10	20	30
45	45°	●	●	●	●	●	●
90	90° (excluding oscillating angle 270°)	●	●				

Code	Description						
Ⓕ Valve voltage							
1	100 VAC	●			●		
2	200 VAC	●			●		
3	24 VDC	●			●		
Ⓖ Switch							
Blank	Without switch	●			●		
SR	With axial lead wire switch	●			●		
SR-U	With radial lead wire switch	●			●		
Ⓗ Option							
Blank	No option	●			●		
FA	With flange bracket	●			●		
LS	With foot bracket	●			●		

⚠ Precautions for model No. selection

*1: The mounting bracket (FA, LS) is attached at shipment.
Refer to pages 1348 and 1349 for dimensions.

[Example of model No.]

RV3SV10-90-45-1-SR-U-LS

Model: Compact rotary actuator with valve

Ⓐ Model No. : RV3S
Ⓑ Valve : Single solenoid
Ⓒ Size : 10
Ⓓ Oscillating angle : 90°
Ⓔ Oscillating origin : 45°
Ⓕ Valve voltage : 100 VAC
Ⓖ Switch : With radial lead wire switch
Ⓗ Option : With foot bracket

● How to order switch unit

RV3S - SR-10 - 90 - 45 - U

Ⓐ Model
Ⓑ Oscillating angle
Ⓒ Oscillating origin
Ⓓ Lead wire direction

Code	Description
Ⓐ Model	
SR-10	Applicable actuator: RV3S/D 10
SR-20	Applicable actuator: RV3S/D 20
SR-30	Applicable actuator: RV3S/D 30
Ⓑ Oscillating angle	
90	90°
180	180°
270	270°

Ⓒ Oscillating origin

Model		SR-3	SR-10	SR-20	SR-30
45	45°	●	●	●	●
90	90°	●	●	●	

Code	Description
Ⓓ Lead wire direction	
Blank	With axial lead wire switch
U	With radial lead wire switch

[Example of model No.]

RV3S-SR-10-90-45-U

Model: Switch unit

Ⓐ Model : For RV3S10
Ⓑ Oscillating angle : 90°
Ⓒ Oscillating origin : 45°
Ⓓ Lead wire direction : Radial lead wire

Operational principle

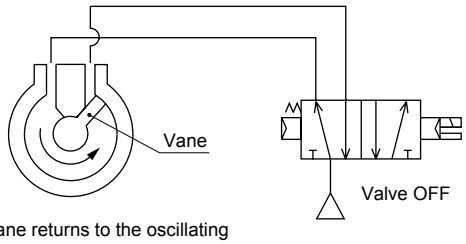

Vane returns to the oscillating origin when the valve turns OFF.

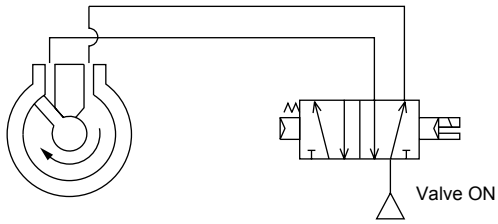

Dimensions

● RV3$^{SV}_{DW}$10, RV3$^{SV}_{DW}$20, RV3$^{SV}_{DW}$30

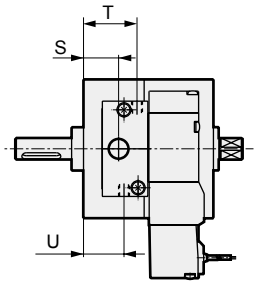

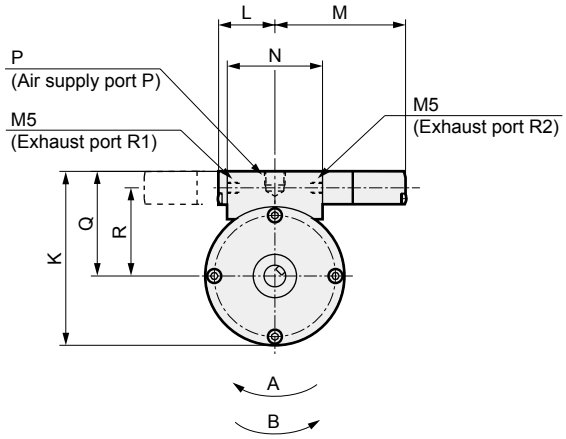

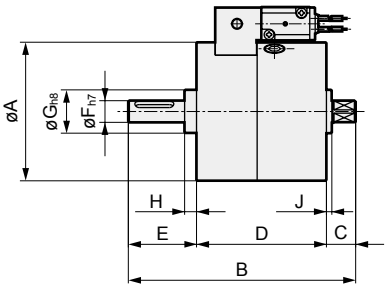

Single solenoid	Double solenoid
ON → A direction	B solenoid ON → A direction
OFF → B direction	A solenoid ON → B direction

* The key is attached. Refer to page 1349 for the key dimensions.
* The detailed dimensions for each body follow RV3$^{S}_{D}$10, RV3$^{S}_{D}$20 and RV3$^{S}_{D}$30.

Code / Model No.	A	B	C	D	E	F	G	H	J	K	L	M	N	P	Q	R	S	T	U
RV3$^{SV}_{DW}$10	42.5	73	10	40	23	6	14	5	2	58.3	26	60	35	M5	37	29.5	13.6	13.6	13.6
RV3$^{SV}_{DW}$20	49.5	93.5	10	55	28.5	8	16	5.5	2	65.2	26	60	37	Rc1/8	40.4	32.9	16.2	23.2	23.2
RV3$^{SV}_{DW}$30	64	105	13.5	60	31.5	10	20	5.5	2.5	80	26	60	44	Rc1/8	48	40.5	16.2	24.7	18.7

Compact rotary actuator with vane mechanism/angle variable

RV3 S/D A Series

- Torque size: 3/10/20/30
- Oscillating angle: Angle specification

JIS symbol

RoHS CAD

Specifications

● Single vane mechanism

Item		RV3SA			
Size		3	10	20	30
Effective torque	N·m	0.31	0.98	1.70	3.19
Actuation		Single vane			
Working fluid		Compressed air			
Max. working pressure	MPa	0.7 (≈100 psi, 7 bar)		1.0 (≈150 psi, 10 bar)	
Min. working pressure	MPa	0.2 (≈29 psi, 2 bar)			
Proof pressure	MPa	1.05 (≈150 psi, 10.5 bar)		1.5 (≈220 psi, 15 bar)	
Ambient temperature	°C	-5 (23°F) to 80 (176°F) *4			-5 (23°F) to 60 (140°F)
Port size		M5			Rc1/8
Oscillating angle setting range	°	30 to 180			30 to 270
Oscillating origin	°	90			45
Allowable absorbed energy *2	mJ	1	2	3	7
Max. operating frequency *3	cycle/min	150	150	120	90
Volumetric capacity	cm^3	3.3	9.8	18	43
Allowable radial load	N	40	50	300	400
Allowable thrust load	N	4.0		25	30
Weight	kg	0.085	0.17	0.28	0.51
Switch unit weight	kg	0.06	0.06	0.07	0.07
Lubrication		Not required (use turbine oil ISO VG32 if necessary for lubrication)			

● Double vane mechanism

Item		RV3DA			
Size		3	10	20	30
Effective torque	N·m	0.71	2.11	3.88	7.7
Actuation		Double vane			
Working fluid		Compressed air			
Max. working pressure	MPa	0.7 (≈100 psi, 7 bar)		1.0 (≈150 psi, 10 bar)	
Min. working pressure	MPa	0.2 (≈29 psi, 2 bar)			
Proof pressure	MPa	1.05 (≈150 psi, 10.5 bar)		1.5 (≈220 psi, 15 bar)	
Ambient temperature	°C	-5 (23°F) to 80 (176°F) *4			-5 (23°F) to 60 (140°F)
Port size		M5			Rc1/8
Oscillating angle setting range	°	30 to 90			
Oscillating origin	°	45			
Allowable absorbed energy *2	mJ	1	2	3	7
Max. operating frequency *3	cycle/min	240	240	180	180
Volumetric capacity	cm^3	2.8	8.1	15	34
Allowable radial load	N	40	50	300	400
Allowable thrust load	N	4.0		25	30
Weight	kg	0.087	0.18	0.29	0.53
Switch unit weight	kg	0.06	0.06	0.07	0.07
Lubrication		Not required (use turbine oil ISO VG32 if necessary for lubrication)			

1 : The allowable absorbed energy differs from the compact rotary actuator RV3 Series.
*2 : Calculate the allowable energy with allowable inertia energy of the shaft of the rotary actuator as follows.
(Allowable energy) ≥ $1/2I\omega^2 \times 10^3$ (refer to page 1398 for details.)
*3 : The max. operating frequency is at a supply pressure of 0.5 MPa [without load].
*4 : 5 to 60°C when switch is provided.
*5 : A key is attached with the rotary actuator with keyway.
*6 : Contact CKD for products other than standard specifications.

External stopper specifications

Item		RV3SA3	RV3SA10	RV3SA20	RV3SA30	RV3DA3	RV3DA10	RV3DA20	RV3DA30
Min. setting angle	°	30							
Max. setting angle	°	180			270	90			
Angle setting pitch	°	15							
Stopper fine adjustment range for angle setting	°	-9 to +6							
Stopper fine adjustment range for reference point	°	±3				-1 to +3	±3		
Stopper fine adjustment range for angle setting at max. setting angle	°	-9 to +6			-9 to +3	-9 to +1	-9 to +3		

Oscillating angle setting range and oscillating origin

Model No.		Oscillating angle setting range	Oscillating origin
Single vane	RV3SA3	30 to 180°	90°
	RV3SA10		
	RV3SA20		
	RV3SA30	30 to 270°	45°
Double vane	RV3DA3	30 to 90°	45°
	RV3DA10		
	RV3DA20		
	RV3DA30		

Switch specifications

Item	Proximity switch FR-*(-U)
Applications	Programmable controller, relay, IC circuit
Output method	NPN output
Power supply voltage	5 VDC to 30 VDC
Load voltage	5 VDC to 30 VDC
Load current	5 mA to 200 mA
Current consumption	24 VDC: 20 mA or less, 12 VDC: 10 mA or less, 5 VDC: 4 mA or less
Internal voltage drop	1.5V or less
Indicator lamp	LED (Lit when ON)
Leakage current	10 μA or less
Lead wire length	1.0 m (oil resistant black 3-conductor cable)
Shock resistance	490 m/s^2
Insulation resistance	100 MΩ or more with 500 V megger
Withstand voltage	No failure after 1 minute of 1,500 VAC application.
Ambient temperature	5 to 60°C
Degree of protection	IEC standards IP67, JIS C0920 (water tight)

* mark indicates rotary actuator size. (3, 10, 20, 30)

Operational principle

● Single vane
1. Configured with vane sliding on the internal body surface, integrated shaft, and shoe (stopper).
2. Air from port A pushes vane, rotates shaft, and generates torque.
3. Air in opposite chamber is exhausted from port B, and the shaft rotates clockwise.
4. Vane stops when it contacts the shoe.
5. Air supply from port B causes counterclockwise rotation in the same manner.

● Double vane
1. Configured with two vanes sliding on the internal body surface, integrated shaft, and two shoes (stoppers).
2. Air from port A pushes vane, goes through passage in shaft, pushes another vane, turns shaft, and finally generates torque.
3. Rotates in the same way as the single vane.

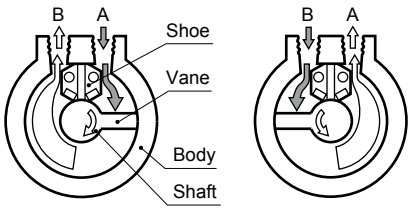

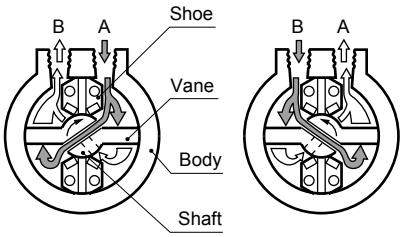

LCM
LCR
LCG
LCW
LCX
STM
STG
STS/STL
STR2
UCA2
ULK*
JSK/M2
JSG
JSC3/JSC4
USSD
UFCD
USC
UB
JSB3
LMB
LML
HCM
HCA
LBC
CAC4
UCAC2
CAC-N
UCAC-N
RCS2
RCC2
PCC
SHC
MCP
GLC
MFC
BBS
RRC
GRC
RV3*
NHS
HRL
LN
Hand
Chuk
MecHnd/Chuk
ShkAbs
FJ
FK
SpdContr
Ending

How to order

● Compact rotary actuator (angle variable) RV3*A

RV3SA 3 - 0 - 90 - FR-U - FA

Ⓐ Model No.
Ⓑ Nominal size
Ⓒ Oscillating angle *1, *2
Ⓓ Oscillating origin
Ⓔ Switch model *3, *4
Ⓕ Options *5, *6

Ⓐ Model No.	Single vane mechanism	Double vane mechanism
	RV3SA	RV3DA
Ⓑ Nominal size		
3 (Effective torque 0.5 MPa)	0.31 N·m	0.71 N·m
10 (Effective torque 0.5 MPa)	0.98 N·m	2.11 N·m
20 (Effective torque 0.5 MPa)	1.70 N·m	3.88 N·m
30 (Effective torque 0.5 MPa)	3.19 N·m	7.70 N·m
Ⓒ Oscillating angle		
0 Without angle specification	●	●
Needed angle With angle specification	●	●

Ⓓ Oscillating origin

Nominal size		3	10	20	30	3	10	20	30
45	45°				●	●	●	●	●
90	90°	●	●	●					

Code	Description	Single vane mechanism	Double vane mechanism
Ⓔ Switch			
Blank	Without switch	●	●
FR	With axial lead wire switch	●	●
FR-U	With radial lead wire switch	●	●
Ⓕ Option			
Blank	No option	●	●
FA	With flange bracket	●	●
LS	With foot bracket	●	●
K	With protective cover	●	●

⚠ Precautions for model No. selection

*1 : If "Without angle setting" is selected, a reference point stopper is mounted and an angle setting stopper is attached. Mount the stopper if necessary.
*2 : Since the required angle is set to an approximate angle from the oscillating origin, always adjust the final angle with the fine adjust screw before starting use.
*3 : Two switches are attached.
*4 : If the type with switch is selected, a switch unit is attached at shipment. Adjust the external stopper and then install the switch.
*5 : If the type with switch is selected, the "K" protective cover cannot be selected.
*6 : The mounting bracket (FA, LS) is attached at shipment. Refer to pages 1348 and 1349 for dimensions.

[Example of model No.]

RV3SA3-0-45-FR-FA

Model: Compact rotary actuator angle variable

Ⓐ Model No. : RV3SA
Ⓑ Size : 3
Ⓒ Oscillating angle : Without angle specification
Ⓓ Oscillating origin : 90°
Ⓔ Switch : With axial lead wire switch
Ⓕ Option : With flange bracket

● How to order switch unit

RV3S - FR-3 - U

Ⓐ Model
Ⓑ Lead wire direction

Code	Description
Ⓐ Model	
FR-3	Applicable actuator: RV3S/DA3
FR-10	Applicable actuator: RV3S/DA10
FR-20	Applicable actuator: RV3S/DA20
FR-30	Applicable actuator: RV3S/DA30
Ⓑ Lead wire direction	
Blank	With axial lead wire switch
U	With radial lead wire switch

[Example of model No.]

RV3S-FR-3-U

Model: Switch unit angle variable

Ⓐ Model : For RV3SA3
Ⓑ Lead wire direction : Radial lead wire

Oscillating origin position

● Oscillating origin 90°
RV3SA3 to 20

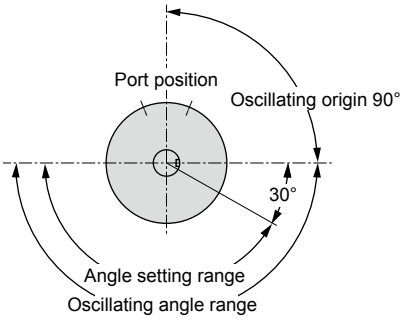

● Oscillating origin 45°
RV3SA30

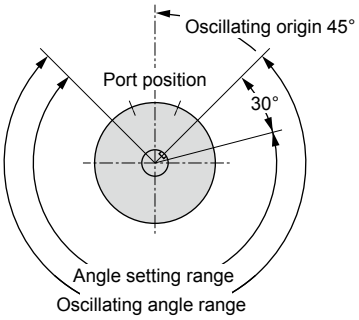

RV3DA3 to 30

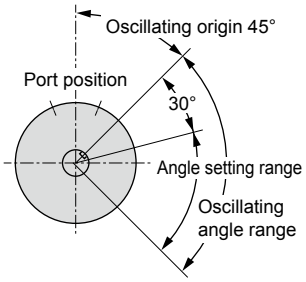

*1 : Tolerance of oscillating origin is based on set screw position.

Oscillating time setting

1. Use an oscillating time within the specified range of the table below. If this range is exceeded, smooth operation cannot be obtained due to stick slip, etc.

● RV3$^{S}_{D}$A3

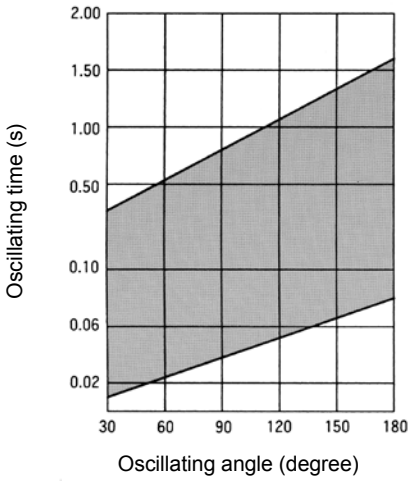

● RV3$^{S}_{D}$A10

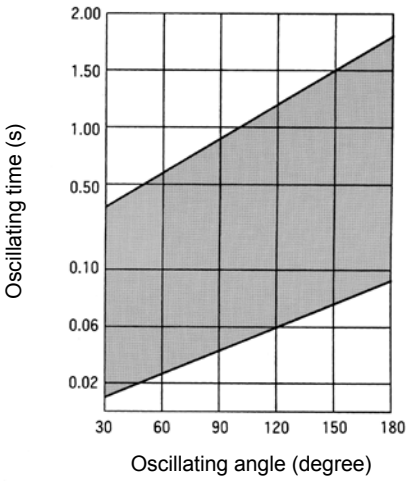

● RV3$^{S}_{D}$A20

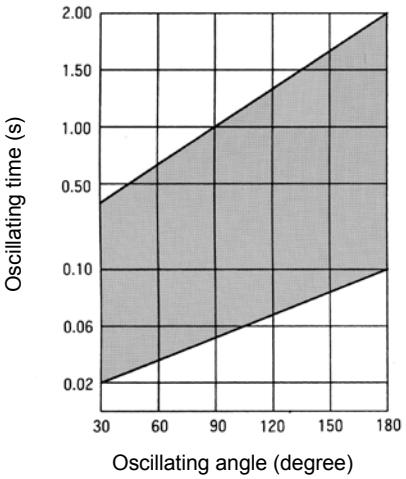

● RV3$^{S}_{D}$A30

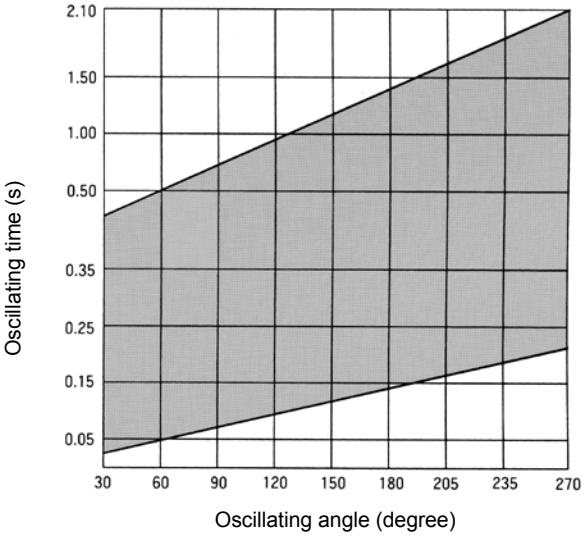

LCM
LCR
LCG
LCW
LCX
STM
STG
STS/STL
STR2
UCA2
ULK*
JSK/M2
JSG
JSC3/JSC4
USSD
UFCD
USC
UB
JSB3
LMB
LML
HCM
HCA
LBC
CAC4
UCAC2
CAC-N
UCAC-N
RCS2
RCC2
PCC
SHC
MCP
GLC
MFC
BBS
RRC
GRC
RV3*
NHS
HRL
LN
Hand
Chuk
MecHnd/Chuk
ShkAbs
FJ
FK
SpdContr
Ending

Output table (effective torque)

● RV3 S/D A3 to 10

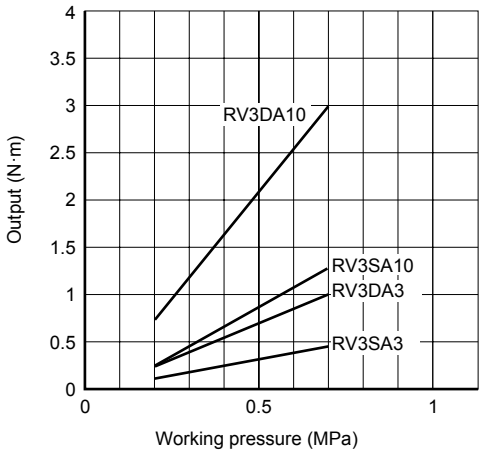

● RV3 S/D A20, 30

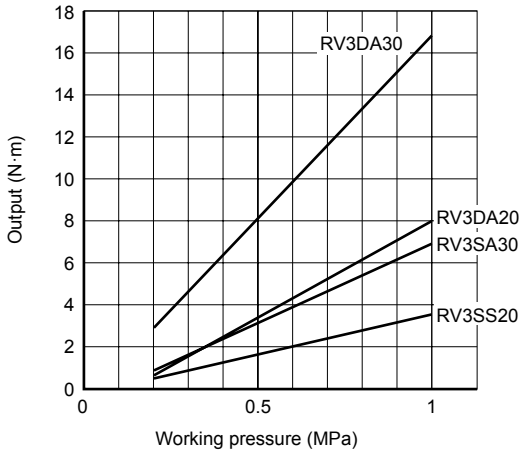

Output table (effective torque)

Unit: N·m

Working pressure (MPa) / Model No.		0.2	0.3	0.4	0.5	0.6	0.7	0.8	0.9	1.0
Single vane	RV3SA3	0.1	0.17	-0.24	-0.31	0.38	0.45	-	-	-
	RV3SA10	0.35	0.56	0.75	0.98	1.2	1.39	-	-	-
	RV3SA20	0.59	0.95	1.33	1.7	2.1	2.49	2.87	3.26	3.68
	RV3SA30	1.1	1.8	2.5	3.19	4.1	4.8	5.8	6.5	7.2
Double vane	RV3DA3	0.25	0.39	0.54	0.71	0.86	1.01	-	-	-
	RV3DA10	0.76	1.17	1.62	2.11	2.54	3.03	-	-	-
	RV3DA20	1.4	2.22	3.06	3.88	4.7	5.53	6.33	7.17	8.07
	RV3DA30	2.7	4.4	6	7.7	9.5	11.2	12.99	14.8	16.6

Internal structure and parts list

● RV3SA*

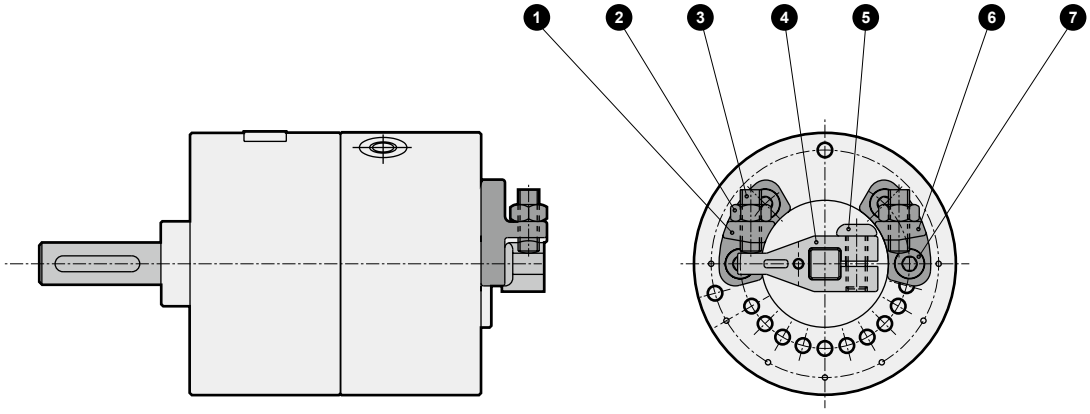

Single vane

● RV3SDA*

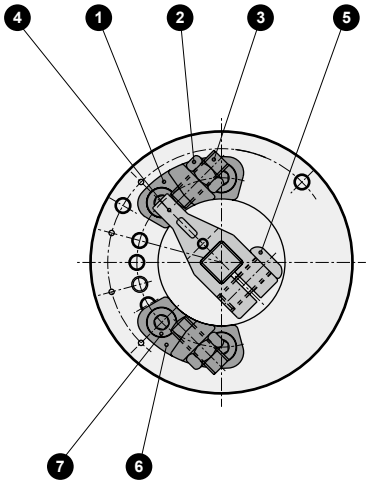

Double vane

* The internal structure of the rotary actuator body is the same as the compact rotary actuator RV3$^{S}_{D}$.
Refer to page 1342 for details.

No.	Part name	Material	Remarks	No.	Part name	Material	Remarks
1	Stopper L	Steel	Reference point	5	Finger mounting bolt	Steel	
2	Lock nut	Steel		6	Stopper R	Steel	Angle setting
3	Fine adjusting screw	Steel		7	Stopper mounting bolt	Steel	
4	Finger	Steel					

LCM
LCR
LCG
LCW
LCX
STM
STG
STS/STL
STR2
UCA2
ULK*
JSK/M2
JSG
JSC3/JSC4
USSD
UFCD
USC
UB
JSB3
LMB
LML
HCM
HCA
LBC
CAC4
UCAC2
CAC-N
UCAC-N
RCS2
RCC2
PCC
SHC
MCP
GLC
MFC
BBS
RRC
GRC
RV3*
NHS
HRL
LN
Hand
Chuk
MecHnd/Chuk
ShkAbs
FJ
FK
SpdContr
Ending

Dimensions

● RV3SA3

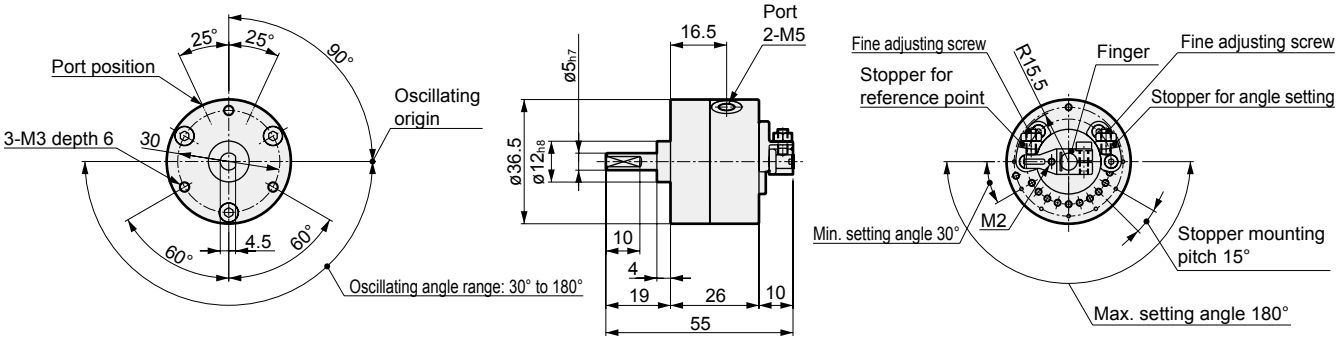

● RV3DA3

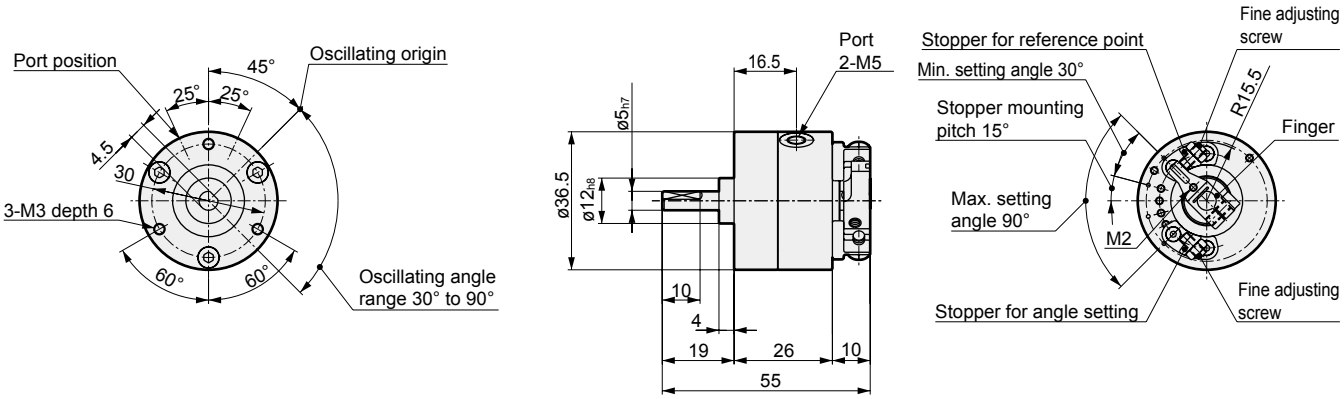

● RV3 S/D A3-*-FR(U)

■ Axial lead wire

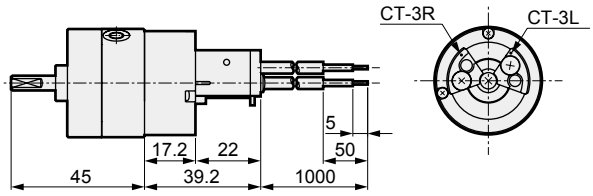

■ Radial lead wire

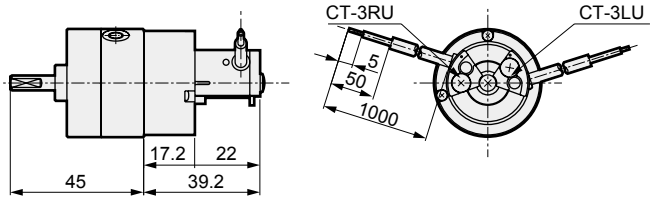

● RV3 S/D A3-*-K (with protective cover)

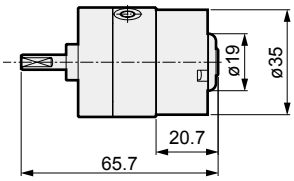

Dimensions

● RV3SA10

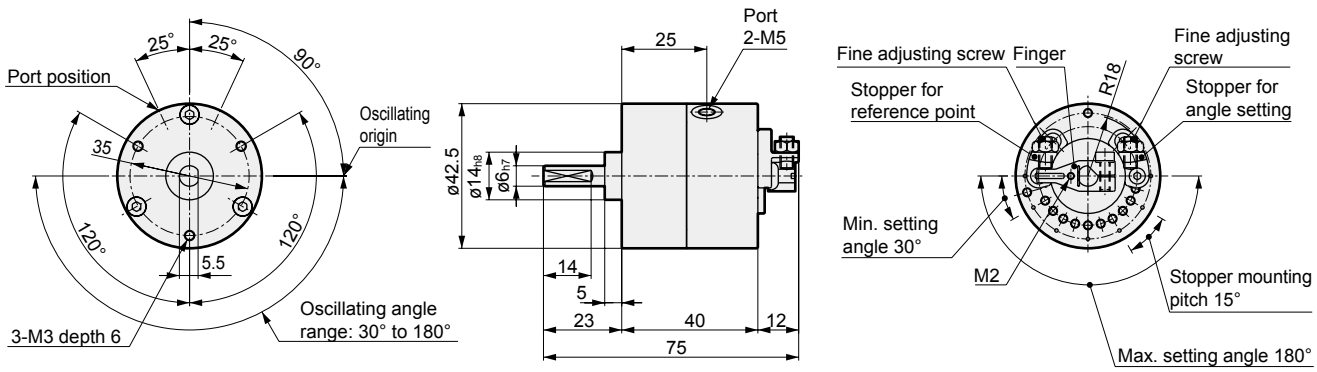

● RV3DA10

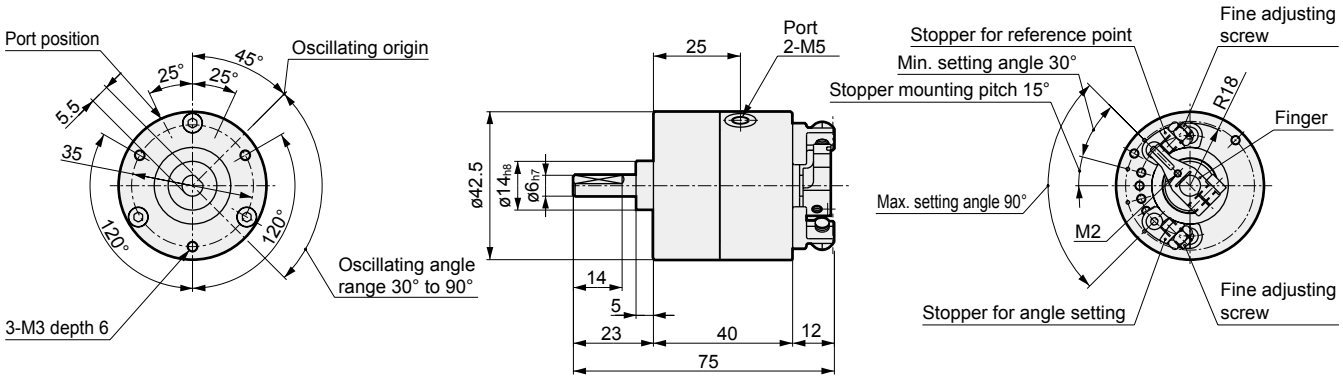

● RV3 S/D A10-*-FR(U)

■ Axial lead wire

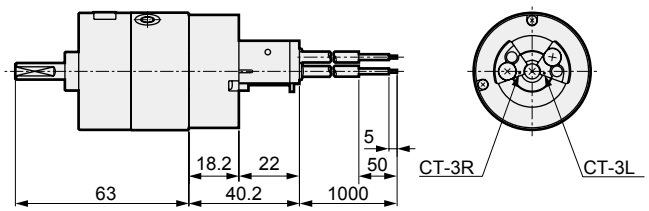

■ Radial lead wire

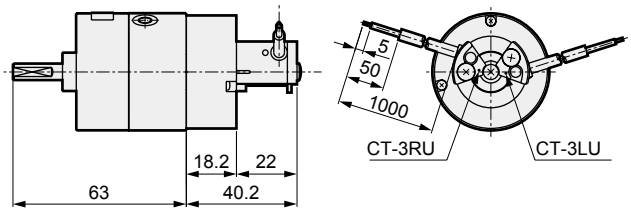

● RV3 S/D A10-*-K (with protective cover)

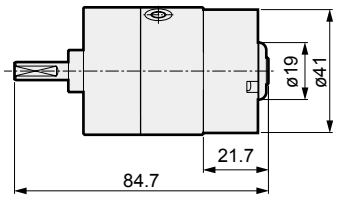

LCM
LCR
LCG
LCW
LCX
STM
STG
STS/STL
STR2
UCA2
ULK*
JSK/M2
JSG
JSC3/JSC4
USSD
UFCD
USC
UB
JSB3
LMB
LML
HCM
HCA
LBC
CAC4
UCAC2
CAC-N
UCAC-N
RCS2
RCC2
PCC
SHC
MCP
GLC
MFC
BBS
RRC
GRC
RV3*
NHS
HRL
LN
Hand
Chuk
MecHnd/Chuk
ShkAbs
FJ
FK
SpdContr
Ending

LCM
LCR
LCG
LCW
LCX
STM
STG
STS/STL
STR2
UCA2
ULK*
JSK/M2
JSG
JSC3/JSC4
USSD
UFCD
USC
UB
JSB3
LMB
LML
HCM
HCA
LBC
CAC4
UCAC2
CAC-N
UCAC-N
RCS2
RCC2
PCC
SHC
MCP
GLC
MFC
BBS
RRC
GRC
RV3*
NHS
HRL
LN
Hand
Chuk
MecHnd/Chuk
ShkAbs
FJ
FK
SpdContr
Ending

Dimensions

● RV3SA20

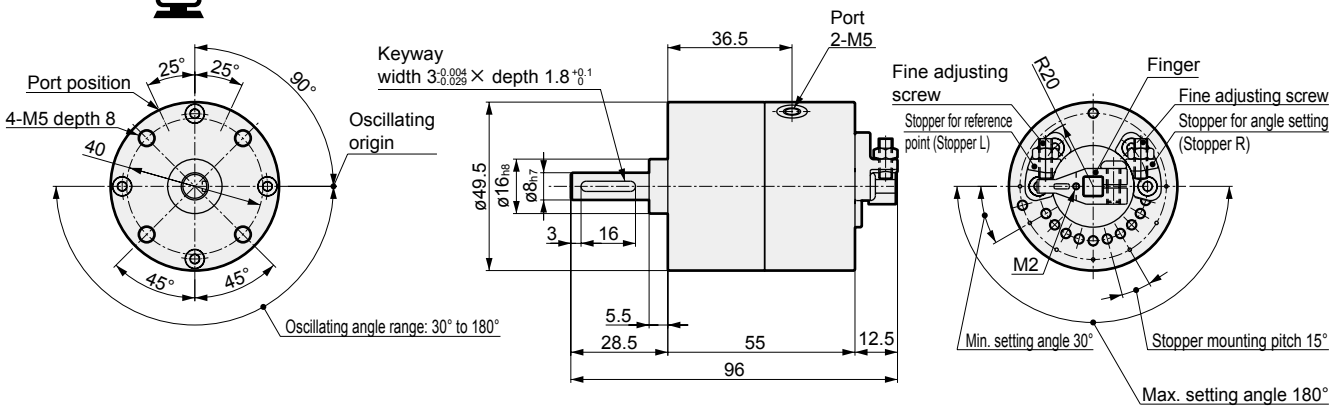

* The key is attached. Refer to page 1349 for the key dimensions.

● RV3DA20

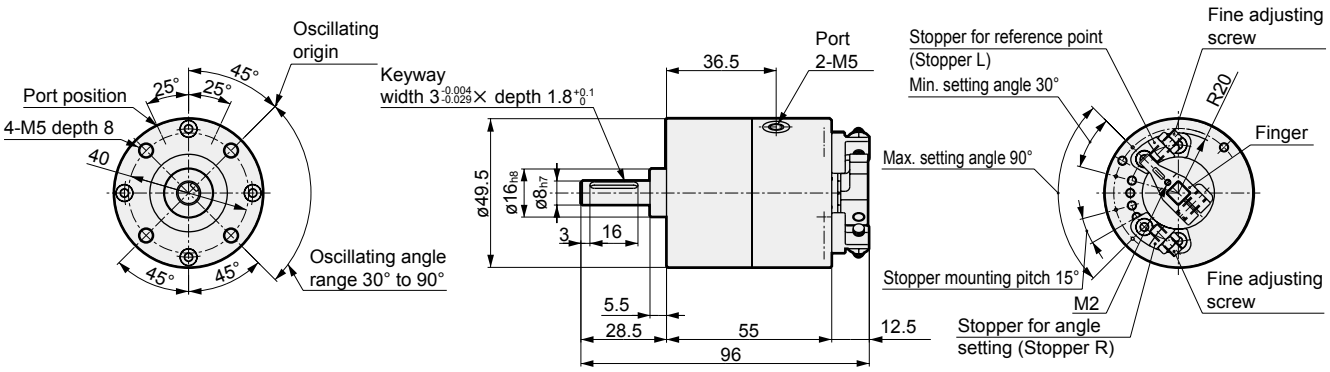

* The key is attached. Refer to page 1349 for the key dimensions.

● RV3 S/D A20-*-FR(U)

■ Axial lead wire

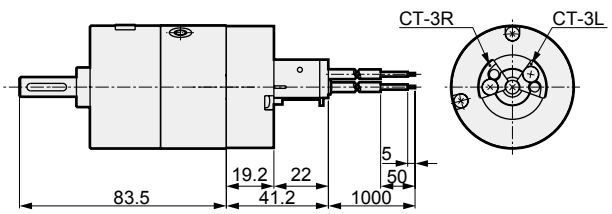

■ Radial lead wire

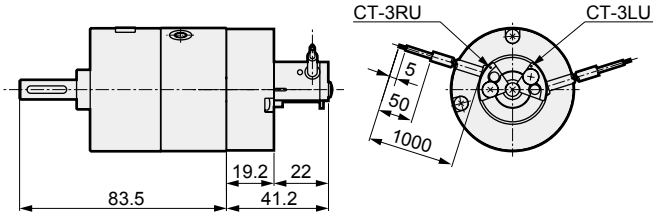

● RV3 S/D A20-*-K (with protective cover)

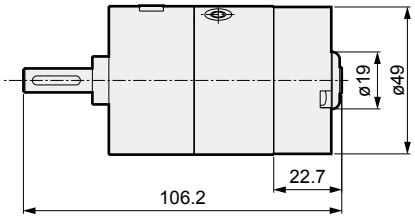

Dimensions

● RV3SA30

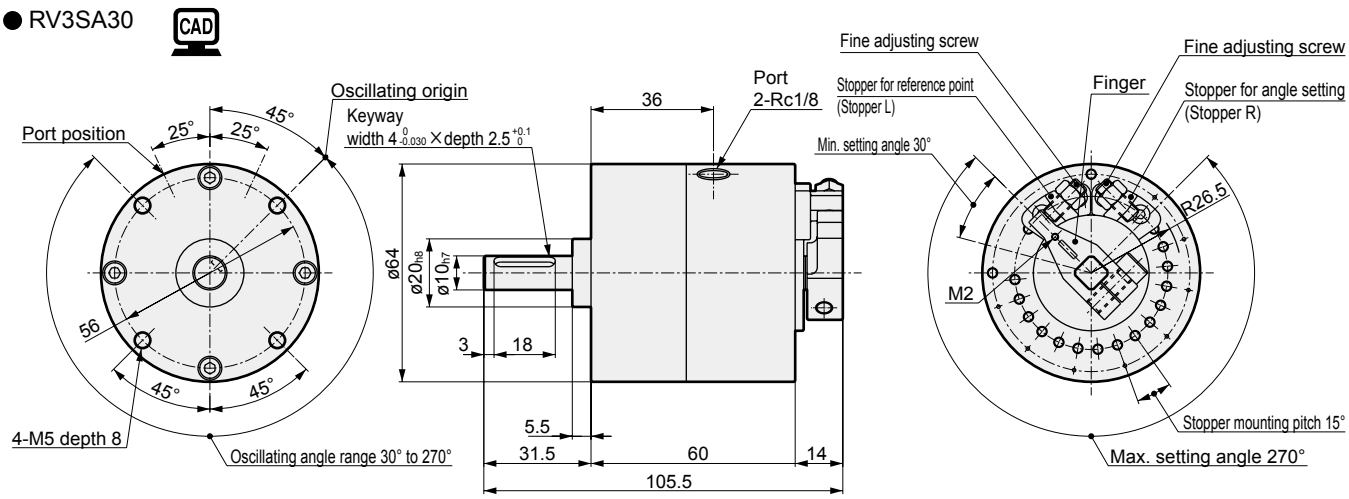

* The key is attached. Refer to page 1349 for the key dimensions.

● RV3DA30

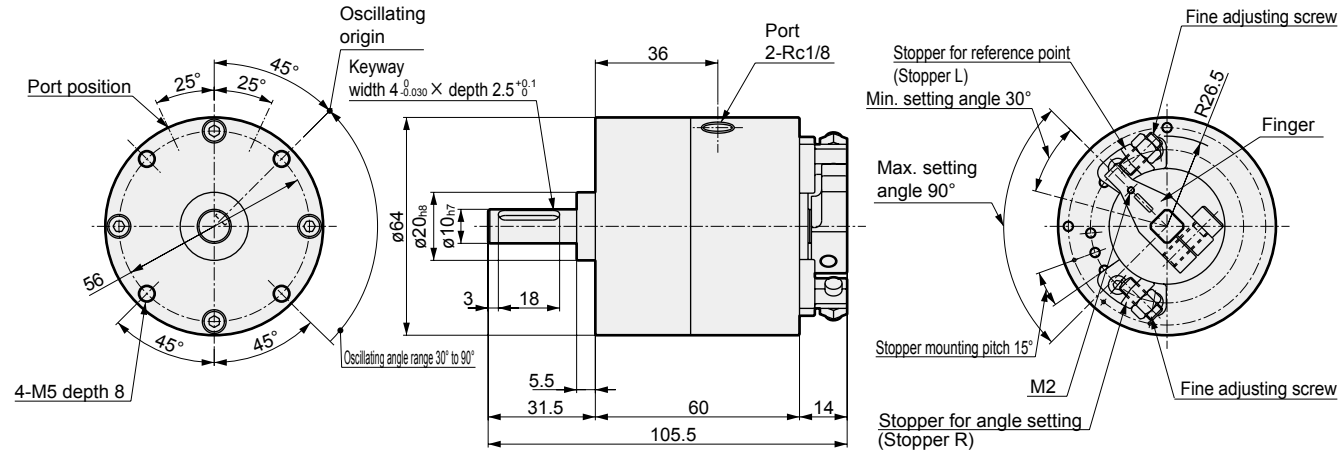

* The key is attached. Refer to page 1349 for the key dimensions.

● RV3 S/D A30-*-FR(U)

■ Axial lead wire

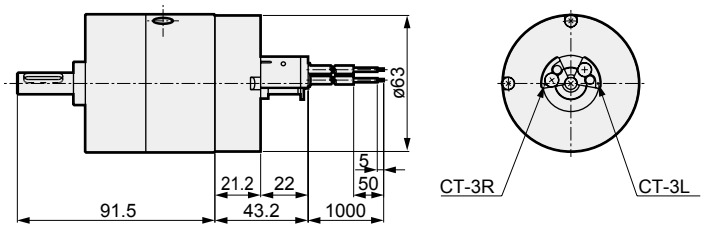

■ Radial lead wire

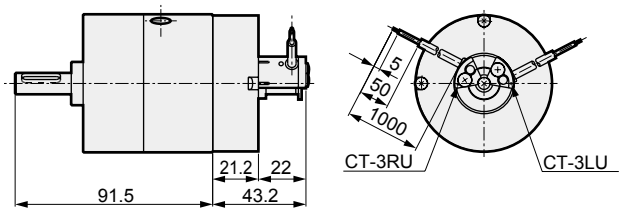

● RV3 S/D A30-*-K (with protective cover)

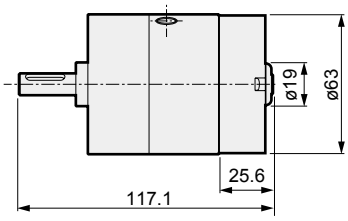

LCM
LCR
LCG
LCW
LCX
STM
STG
STS/STL
STR2
UCA2
ULK*
JSK/M2
JSG
JSC3/JSC4
USSD
UFCD
USC
UB
JSB3
LMB
LML
HCM
HCA
LBC
CAC4
UCAC2
CAC-N
UCAC-N
RCS2
RCC2
PCC
SHC
MCP
GLC
MFC
BBS
RRC
GRC
RV3*
NHS
HRL
LN
Hand
Chuk
MecHnd/Chuk
ShkAbs
FJ
FK
SpdContr
Ending

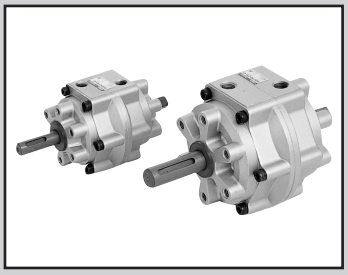

Large rotary actuator Vane mechanism/standard

RV3 S/D Series

- Torque size: 50/150/300/800
- Oscillating angle: 90°/100°/180°/270°/280°

JIS symbol

RoHS CAD

Specifications

● Single vane mechanism

Item	Single vane mechanism RV3S															
Size	50				150				300				800			
Effective torque N·m	4.7				14.7				27.9				102			
Actuation	Single vane															
Working fluid	Compressed air															
Max. working pressure MPa	1.0 (≈150 psi, 10 bar)															
Min. working pressure MPa	0.2 (≈29 psi, 2 bar) *1															
Proof pressure MPa	1.5 (≈220 psi, 15 bar)															
Ambient temperature °C	5 (41°F) to 60 (140°F)															
Port size	Rc1/8				Rc1/4				Rc3/8				Rc1/2			
Oscillating angle tolerance Degree	90 $^{+3}_{0}$	180 $^{+3}_{0}$	270 $^{+3}_{0}$	280 $^{+3}_{0}$	90 $^{+3}_{0}$	180 $^{+3}_{0}$	270 $^{+3}_{0}$	280 $^{+3}_{0}$	90 $^{+3}_{0}$	180 $^{+3}_{0}$	270 $^{+3}_{0}$	280 $^{+3}_{0}$	90 $^{+3}_{0}$	180 $^{+3}_{0}$	270 $^{+3}_{0}$	280 $^{+3}_{0}$
Oscillating origin Degree	45			40	45			40	45			40	45			40
Allowable absorbed energy *2 mJ	49				225				1078				3820			
Max. operating freq *3 cycle/min	180	90	60		120	80	50		90	60	40		70	45	30	
Volumetric capacity cm^3	51		61	62	146		179	185	244	283	352	365	754	869	1036	1046
Allowable L-shaped load N	588				1176				1960				4900			
Allowable thrust load N	44.1				88.2				147				490			
Weight kg	0.82	0.79	0.73	0.7	2.0	1.9	1.7	1.6	3.7			3.6	12.7	12.2	11.2	11.0
Switch unit weight kg *6 — Without shock absorber	0.1				0.14				0.18				0.28			
Switch unit weight kg *6 — With shock absorber 90°	0.16				0.27				0.50				2.9			
Switch unit weight kg *6 — With shock absorber 100°	0.15				0.26				0.49				2.8			
Switch unit weight kg *6 — With shock absorber 180°	0.16				0.27				0.50				2.9			
Switch unit weight kg *6 — With shock absorber 270°	0.14				0.23				0.41				2.7			
Switch unit weight kg *6 — With shock absorber 280°	0.14				0.22				0.39				2.6			
Lubrication	Not required (use turbine oil class 1 ISO VG32 if necessary for lubrication)															

● Double vane mechanism

Item	Double vane mechanism RV3D							
Size	50		150		300		800	
Effective torque N·m	10.1		34.3		66.6		206	
Actuation	Double vane							
Working fluid	Compressed air							
Max. working pressure MPa	1.0 (≈150 psi, 10 bar)							
Min. working pressure MPa	0.2 (≈29 psi, 2 bar) *1							
Proof pressure MPa	1.5 (≈220 psi, 15 bar)							
Ambient temperature °C	5 (41°F) to 60 (140°F)							
Port size	Rc1/8		Rc1/4		Rc3/8		Rc1/2	
Oscillating angle tolerance Degree	90 $^{+3}_{0}$	100 $^{+3}_{0}$	90 $^{+3}_{0}$	100 $^{+3}_{0}$	90 $^{+3}_{0}$	100 $^{+3}_{0}$	90 $^{+3}_{0}$	100 $^{+3}_{0}$
Oscillating origin Degree	45	40	45	40	45	40	45	40
Allowable absorbed energy *2 mJ	49		225		1078		3820	
Max. operating frequency *3 cycle/min	180		120		90		90	70
Volumetric capacity cm^3	42	43	127	123	244	271	754	774
Allowable L-shaped loadN	588		1176		1960		4900	
Allowable thrust load N	44.1		88.2		147		490	
Weight kg	0.82	0.8	2.0	1.9	4.3	4.1	12.7	12.5
Switch unit weight kg *6 — Without shock absorber	0.1		0.14		0.18		0.28	
Switch unit weight kg *6 — With shock absorber 90°	0.16		0.27		0.50		2.9	
Switch unit weight kg *6 — With shock absorber 100°	0.15		0.26		0.49		2.8	
Switch unit weight kg *6 — With shock absorber 180°	0.16		0.27		0.50		2.9	
Switch unit weight kg *6 — With shock absorber 270°	0.14		0.23		0.41		2.7	
Switch unit weight kg *6 — With shock absorber 280°	0.14		0.22		0.39		2.6	
Lubrication	Not required (use turbine oil ISO VG32 if necessary for lubrication)							

*1 : The min. working pressure is 0.3 MPa when the optional shock absorber is selected.
*2 : Calculate the allowable energy with allowable inertia energy of the shaft of the rotary actuator as follows. [Allowable energy] ≥ (1/2) x I x ω^2 x 10^3 (refer to page 1398 for details).
If the formula above is not satisfied, problems such as broken shafts may be caused.
*3 : The max. operating frequency is at a supply pressure of 0.5 MPa [without load].
*4 : A key is attached with the rotary actuator with keyway.
*5 : Contact CKD for products other than standard specifications.
*6 : The switch unit weight is the weight of two switches.

Switch specifications

Item	Proximity 2-wire	Proximity 3-wire	Reed 2-wire	
	M2V	M3V	MOV	M5V
Applications	Dedicated for programmable controller	For programmable controller, relay, IC circuit, compact solenoid valve	For programmable controller, relay	For programmable controller, relay, IC circuit (without indicator lamp), serial connection
Output method	———	NPN output	———	
Power supply voltage	———	4.5 to 28 VDC	———	
Load voltage/current	10 to 30 VDC, 5 to 30 mA	30 VDC or less, 100 mA or less	5 to 50 mA with 12/24 VDC, 7 to 20 mA with 110 VAC	50 mA or less with 5/12/24 VDC, 20 mA or less with 110 VAC
Indicator	LED (Lit when ON)		LED (Lit when ON)	No indicator lamp
Leakage current	1 mA or less	10 μA or less	0 mA	
Weight g	1 m:22 3 m:57 5 m:93			

Operational principle

● Single vane

1. Configured with vane sliding on the internal body surface, integrated shaft, and shoe (stopper).
2. Air from port A pushes vane, rotates shaft, and generates torque.
3. Air in opposite chamber is exhausted from port B, and the shaft rotates clockwise.
4. Vane stops when it contacts the shoe.
5. Air supply from port B causes counterclockwise rotation in the same manner.

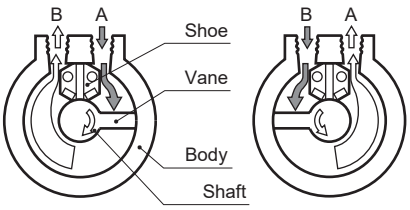

● Double vane

1. Configured with two vanes sliding on the internal body surface, integrated shaft, and two shoes (stoppers).
2. Air from port A pushes vane, goes through passage in shaft, pushes another vane, turns shaft, and finally generates torque.
3. Rotates in the same way as the single vane.

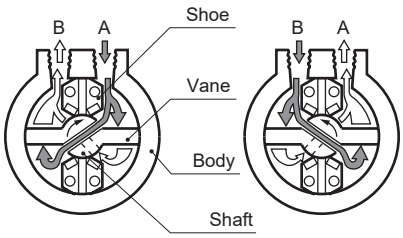

LCM
LCR
LCG
LCW
LCX
STM
STG
STS/STL
STR2
UCA2
ULK*
JSK/M2
JSG
JSC3/JSC4
USSD
UFCD
USC
UB
JSB3
LMB
LML
HCM
HCA
LBC
CAC4
UCAC2
CAC-N
UCAC-N
RCS2
RCC2
PCC
SHC
MCP
GLC
MFC
BBS
RRC
GRC
RV3*
NHS
HRL
LN
Hand
Chuk
MecHnd/Chuk
ShkAbs
FJ
FK
SpdContr
Ending

LCM
LCR
LCG
LCW
LCX
STM
STG
STS/STL
STR2
UCA2
ULK*
JSK/M2
JSG
JSC3/JSC4
USSD
UFCD
USC
UB
JSB3
LMB
LML
HCM
HCA
LBC
CAC4
UCAC2
CAC-N
UCAC-N
RCS2
RCC2
PCC
SHC
MCP
GLC
MFC
BBS
RRC
GRC
RV3*
NHS
HRL
LN
Hand
Chuk
MecHnd/Chuk
ShkAbs
FJ
FK
SpdContr
Ending

How to order

● Large rotary actuator (standard) RV3*

RV3S 50 - 90 - 45 - M2V - R - C

Ⓐ Model No.
Ⓑ Nominal size
Ⓒ Oscillating angle
Ⓓ Oscillating origin *1
Ⓔ Switch
Ⓕ Switch quantity
Ⓖ Option *2, *3 *4

Ⓐ Model No.	Single vane mechanism	Double vane mechanism
	RV3S	RV3D

Code	Description	RV3S	RV3D
Ⓑ Nominal size			
50	Effective torque 0.5 MPa	4.7 N·m	10.1 N·m
150		14.7 N·m	34.3 N·m
300		27.9 N·m	66.6 N·m
800		102 N·m	206 N·m
Ⓒ Oscillating angle			
90	90°	●	●
100	100°		●
180	180°	●	
270	270°	●	
280	280° (The type with switch is not available when the shock absorber is selected.)	●	
Ⓓ Oscillating origin			
40	40°	●	●
45	45°	●	●

Ⓔ Switch

L-shaped lead wire	Contact	Voltage AC	Voltage DC	Indicator	Lead wire	RV3S	RV3D
M2V*	Proximity		●	1-color LED	2-wire	●	●
M3V*			●		3-wire	●	●
M0V*	Reed	●	●		2-wire	●	●
M5V*		●	●	No indicator lamp		●	●
* Lead wire length							
Blank	1 m (standard)					●	●
3	3 m (option)					●	●
5	5 m (option)					●	●

Ⓕ Switch quantity		RV3S	RV3D
R	With clockwise rotation detection 1 piece	●	●
L	With counterclockwise rotation detection 1 piece	●	●
D	2	●	●

Ⓖ Option

Nominal size		50	150	300	800	50	150	300	800
Blank	No option	●	●	●	●	●	●	●	●
FA	With flange bracket	●	●			●	●		
LS	With foot bracket	●	●	●	●	●	●	●	●
C	With shock absorber	●	●	●	●	●	●	●	●

⚠ Precautions for model No. selection

*1:Refer to the table below for the relation of the oscillating angle and oscillating origin. Relation of oscillating angle and oscillating origin

Ⓒ Oscillating angle \ Ⓓ Oscillating origin	40°	45°
90°		●
100°	●	
180°		●
270°		●
280°	●	

*2 : The mounting bracket (FA, LS) is included at shipment. Refer to page 1371 for dimensions.
*3 : Refer to page 1382 for shock absorber (C).
*4 : The switch cannot be installed with the oscillating angle 280 shock absorber.

[Example of model No.]

RV3S50-90-45-M2V-D-C

Model: Large rotary actuator

Ⓐ Model No. : RV3S
Ⓑ Size : 50
Ⓒ Oscillating angle : 90°
Ⓓ Oscillating origin : 45°
Ⓔ Switch : M2V switch, lead wire length 1 m
Ⓕ Switch quantity : With clockwise rotation detection 1 piece
Ⓖ Option : With shock absorber

Oscillating origin position

● Oscillating origin 45° RV3*50 to 800

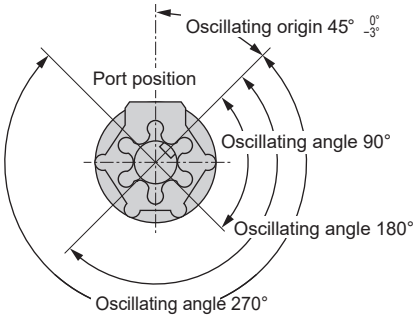

● Oscillating origin 40° RV3*50 to 800

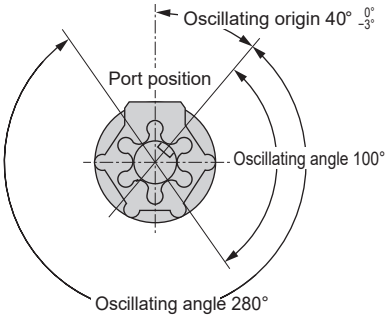

*1 : Tolerance of oscillating origin is based on mounting screw position.
*2 : Deflection of torsion angle between keyway on longer axis side (or cut plane) and square on shorter axis side within 1.5°.

LCM
LCR
LCG
LCW
LCX
STM
STG
STS/STL
STR2
UCA2
ULK*
JSK/M2
JSG
JSC3/JSC4
USSD
UFCD
USC
UB
JSB3
LMB
LML
HCM
HCA
LBC
CAC4
UCAC2
CAC-N
UCAC-N
RCS2
RCC2
PCC
SHC
MCP
GLC
MFC
BBS
RRC
GRC
RV3*
NHS
HRL
LN
Hand
Chuk
MecHnd/Chuk
ShkAbs
FJ
FK
SpdContr
Ending

How to order switch unit

Switch unit

RVU50 - C - 90 - M2V - R

Ⓐ Model
Ⓑ Unit
Ⓒ Oscillating angle
Ⓓ Switch model No.
Ⓔ Switch quantity

Code	Description
Ⓐ Model	
RVU50	Applicable actuator: RV3S/D50
RVU150	Applicable actuator: RV3S/D150
RVU300	Applicable actuator: RV3S/D300
RVU800	Applicable actuator: RV3S/D800
Ⓑ Unit	
Blank	Standard products
C	With shock absorber
Ⓒ Oscillating angle	
90	90°
100	100°
180	180°
270	270°
280	280° ("C" (for shock absorber) cannot be selected.)

Ⓓ Switch model No.			
M2V*	Prox.	1-color LED	2-wire
M3V*			3-wire
M0V*	Reed	No indicator lamp	2-wire
M5V*			

*** Lead wire length**	
Blank	1 m (standard)
3	3 m (option)
5	5 m (option)

Ⓔ Switch quantity	
R	With clockwise rotation detection 1 piece
L	With counterclockwise rotation detection 1 piece
D	2

⚠ Precautions for model No. selection

Note: When the type for shock absorber is selected, the shock absorber body must be purchased separately.

[Example of model No.]

RVU50-C-90-M2V-R

Model: Switch unit

Ⓐ Model : RV3S/D50
Ⓑ Unit : With shock absorber
Ⓒ Oscillating angle : 90°
Ⓓ Switch model No. : M2V switch, lead wire length 1 m
Ⓔ Switch quantity : With clockwise rotation detection 1 piece

Output characteristics graph (effective torque)

● RV3 S/D 50/150/300/800

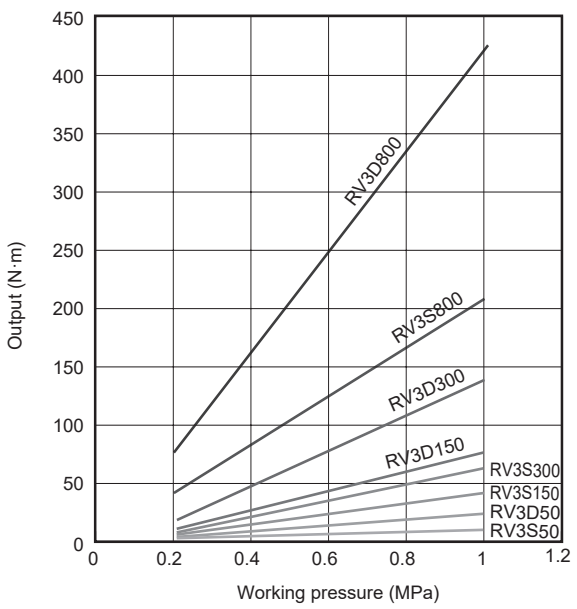

Output table (effective torque) Unit: N·m

Working pressure (MPa) / Model No.		0.2	0.3	0.4	0.5	0.6	0.7	0.8	0.9	1.0
Single vane	RV3S50	1.25	2.59	-3.69	-4.79	5.9	-7	8.29	9.5	10.6
	RV3S150	5.5	8.5	11.5	15	18	21	24	27.3	30.5
	RV3S300	10.5	16.5	22.5	28.5	34.5	40.5	46	51.8	57.5
	RV3S800	37.8	59.1	81	102	123	144	166	186	205
Double vane	RV3D50	3.3	5.79	8.29	10.4	12.8	15.1	17.6	20.1	22.5
	RV3D150	12.5	19	27	35	41.5	48	55	62	69
	RV3D300	25.5	39	54	68	83	97	110	124	137
	RV3D800	77.4	120	161	206	247	288	332	371	411

Oscillating time setting

1. Use an oscillating time within the specified range of the table below. If this range is exceeded, smooth operation cannot be obtained due to stick slip, etc.

(s)

Model No.	Oscillating angle				
	90°	100°	180°	270°	280°
RV3 S/D 50	0.08 to 0.8	0.09 to 0.9	0.16 to 1.6	0.24 to 2.4	0.25 to 2.5
RV3 S/D 150	0.12 to 1.2	0.13 to 1.3	0.24 to 2.4	0.36 to 3.6	0.37 to 3.7
RV3 S/D 300	0.16 to 1.6	0.17 to 1.7	0.32 to 3.2	0.48 to 4.8	0.49 to 4.9
RV3*800	0.22 to 2.2	0.24 to 2.4	0.44 to 4.4	0.66 to 6.6	0.68 to 6.8

Internal structure and parts list

● RV3S50/150/300

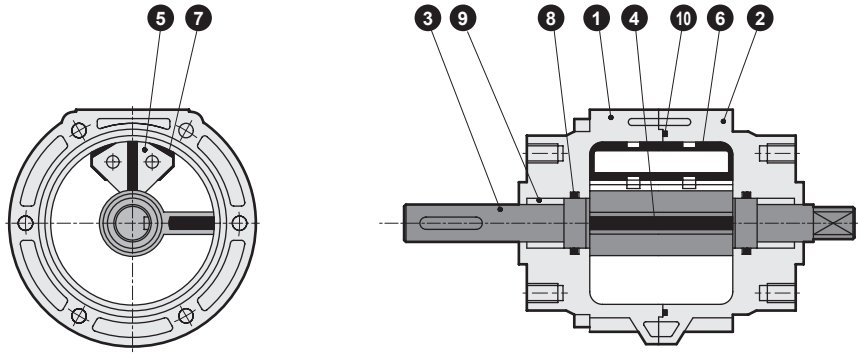

● RV3S800/RV3SH800

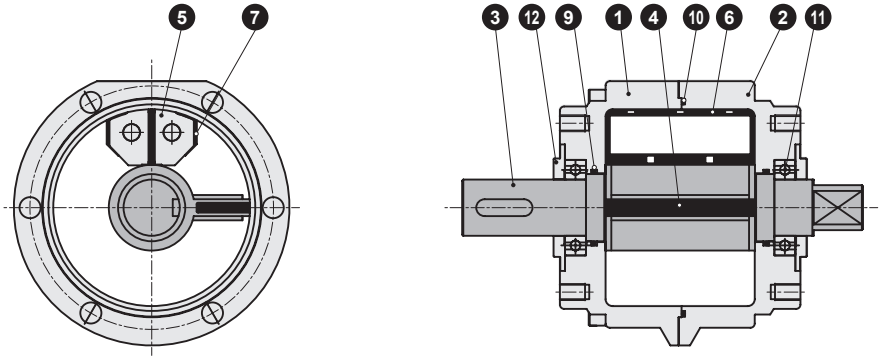

● RV3D50/150/300

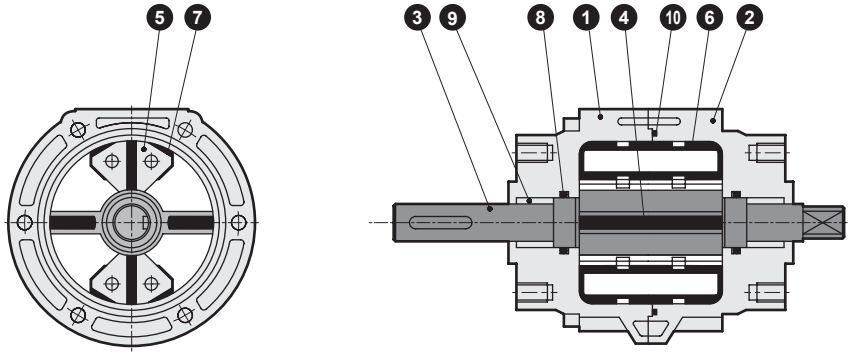

● RV3D800/RV3DH800

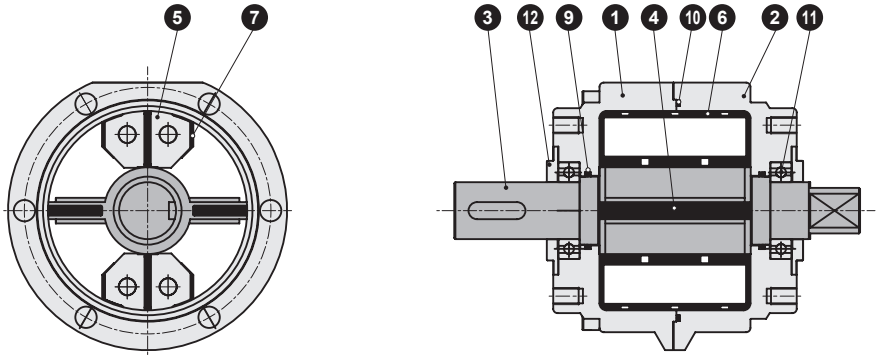

No.	Part name	Material	Remarks	No.	Part name	Material	Remarks
1	Body A	Aluminum casting		7	Damper	Resin	
2	Body B	Aluminum casting		8	O-ring	Nitrile rubber	
3	Vane shaft	Steel		9	Bearing	Sintering oil impregnated material	
4	Vane seal (vane shaft)	Nitrile rubber		10	O-ring	Nitrile rubber	
5	Shoe	Zinc alloy die-casting		11	Bearing	Steel	
6	Shoe sealant	Nitrile rubber		12	Cover plate	Steel	

Note: The vane seal and vane shaft are integrated.
Refer to page 1393 for the repair parts list.

Dimensions

● RV3 S/D 50/150/300

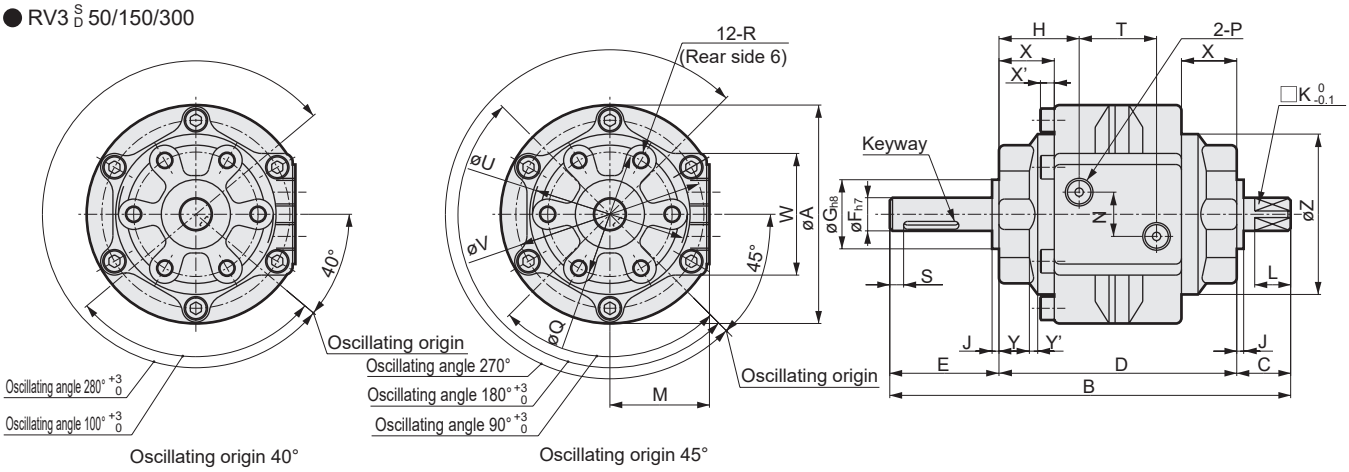

* The key is attached. Refer to page 1371 for the key dimensions.

Code / Model No.	A	B	C	D	E	F	G	H	J	K	L	M	N	P	Q	R	S	T	Key groove W x D x L	U	W	V	Z	X	X'	Y	Y'
RV3 S/D 50	79	145	19.5	86	39.5	12	25	29	2.5	10	13	36	16	Rc1/8	45	M6 Depth 9	5	28	4x2.5x20	57	44	68	58	20	5	11	3
RV3 S/D 150	110	180	23.5	103	53.5	17	30	34.5	3	13	16	51	24	Rc1/4	70	M8 Depth 12	5	34	5x3x36	85	61	97	85.2	23.5	6	10.5	5
RV3 S/D 300	141.5	220	30	125	65	25	45	41.5	3.5	19	22	66	32	Rc3/8	80	M10 Depth 15	5	42	7x4x40	98.5	78	125	110	27.5	8	13	4.5

● With switch

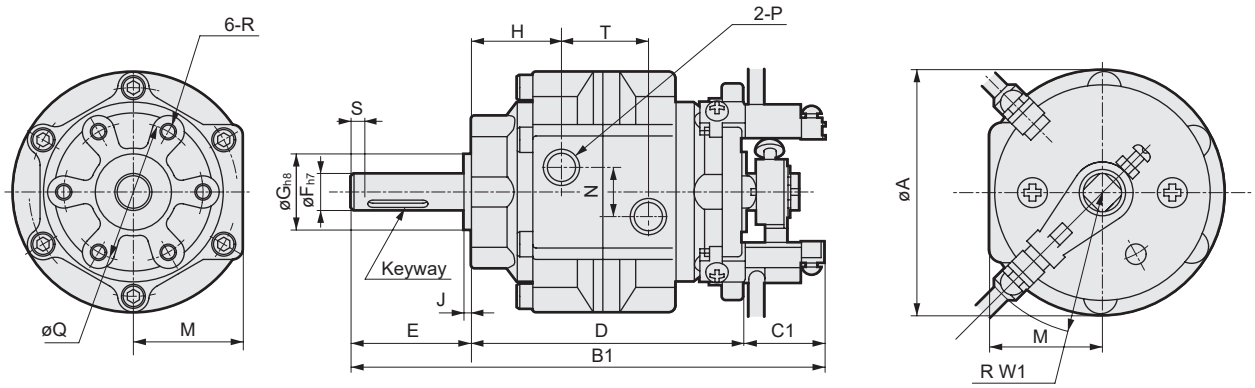

● With switch, shock absorber

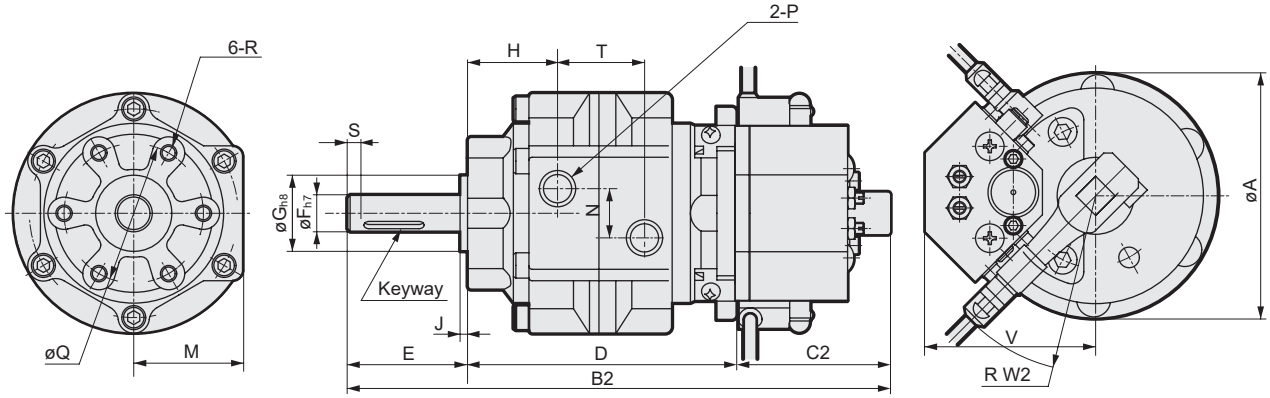

* The key is attached. Refer to page 1371 for the key dimensions.

Code / Model No.	A	B1	B2	C1	C2	D	E	F	G	H	J	M	N	P	Q	R	S	T	V	W1	W2	Keyway W x D x L
RV3 S/D 50	79	157.2	177.2	30.5	50.5	87.2	39.5	12	25	29	2.5	36	16	Rc1/8	45	M6 Depth 9	5	28	54	47	58	4x2.5x20
RV3 S/D 150	110	188.2	214.2	30.5	56.5	104.2	53.5	17	30	34.5	3	51	24	Rc1/4	70	M8 Depth 12	5	34	71.5	61	72	5x3x36
RV3 S/D 300	141.5	221.7	253.7	30.5	62.5	126.2	65	25	45	41.5	3.5	66	32	Rc3/8	80	M10 Depth 15	5	42	95	69	88	7x4x40

LCM
LCR
LCG
LCW
LCX
STM
STG
STS/STL
STR2
UCA2
ULK*
JSK/M2
JSG
JSC3/JSC4
USSD
UFCD
USC
UB
JSB3
LMB
LML
HCM
HCA
LBC
CAC4
UCAC2
CAC-N
UCAC-N
RCS2
RCC2
PCC
SHC
MCP
GLC
MFC
BBS
RRC
GRC
RV3*
NHS
HRL
LN
Hand
Chuk
MecHnd/Chuk
ShkAbs
FJ
FK
SpdContr
Ending

Dimensions

● RV3 S/D 800

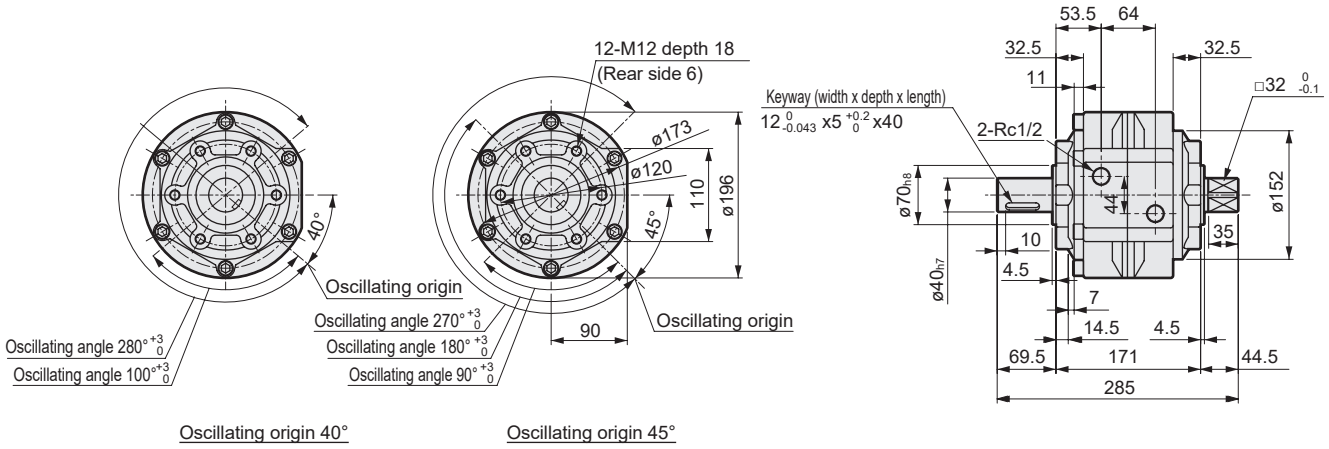

● With switch

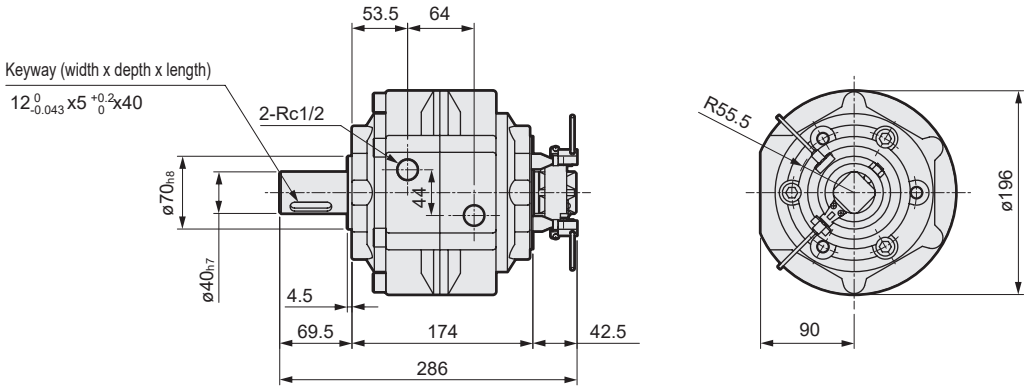

● With switch, shock absorber

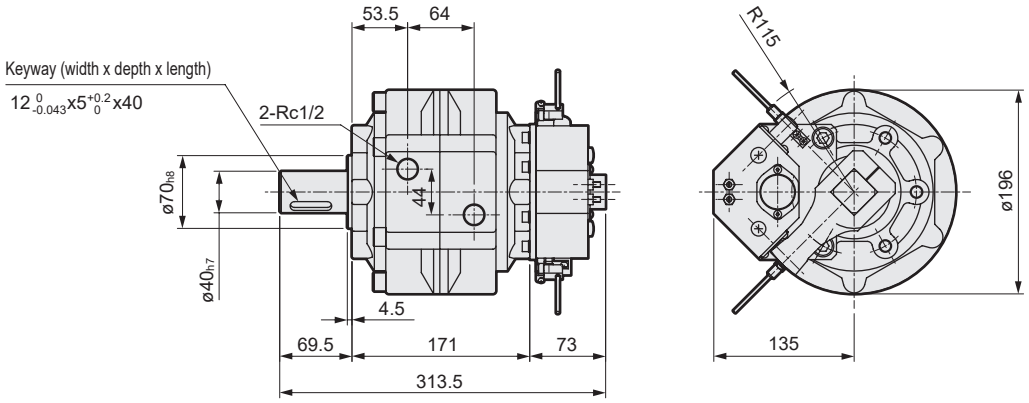

Options/accessories

Flange bracket/foot bracket

How to order

● Flange bracket

Model – FA

Flange bracket

Model	Compatibility
RVS50	RV3 S/D 50
RVS150	RV3 S/D 150

● Foot bracket

Model – LS

Foot bracket

Model	Compatibility
RVS50	RV3 S/D 50
RVS150	RV3 S/D 150
RVS300	RV3 S/D 300
RVS800	RV3 S/D 800

Dimensions

● RVS 50/150 -FA *2

Material:Steel

Zinc chromate treatment

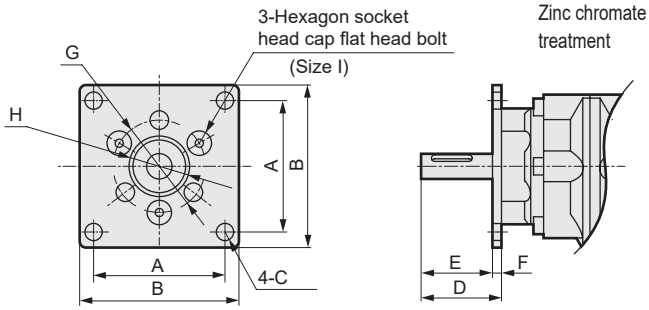

Weight 50: 0.18 kg
150: 0.49 kg

● RVS 50/150/300/800 -LS

Material:Steel (50, 150)
Cast iron (300, 800)
Zinc chromate treatment

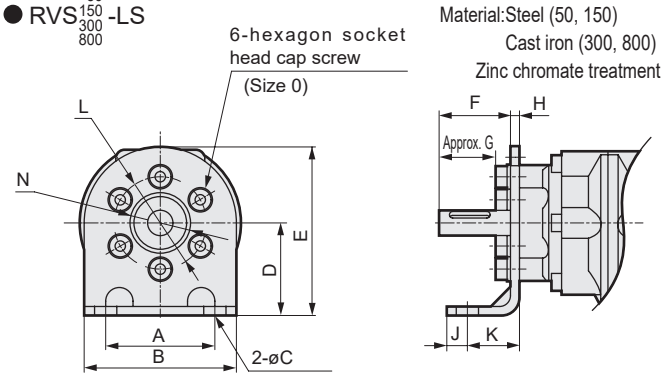

Weight 50: 0.25 kg
150: 1.05 kg
300: 1.73 kg
800: 3.9 kg

Note) Foot bracket is 60.ît can be installed rotating at a time.

Model	A	B	C	D	E	F	G	H	I
RV*50	64	80	7	39.5	35	4.5	45	30	M 6 x 12
RV*150	88	110	9	53.5	47.5	6	70	37	M 8 x 12

*1: One bracket and mounting bolt (required quantity) are shipped.
*2: Flange bracket is not available for RV*300.

Model	A	B	C	D	E	F	G	H	J	K	L	N	O
RV*50	55	75	11	45	82.5	35	27.5	4.5	10	25	45	30	M 6 x 12
RV*150	80	110	13	65	115	43.5	33.5	10	12	28	70	37	M 8 x 22
RV*300	100	140	15	80	135	53	40.5	12	13	32	80	52	M 10 x 28
RV*800	140	200	15	110	200	54.5	39.5	15	15	35	120	75	M 12 x 35

Key

Dimensions

The following keys are attached with the rotary actuator with keyway.

● JIS B1301 parallel key b x h x ℓ double round S45CS45C

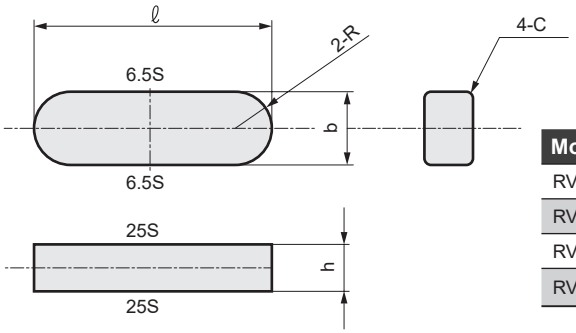

Unit: mm

Model No.	Nominal key	b	h	ℓ	C	R
RV3*50	4 x 4 x 20	4 0/−0.03	4 0/−0.03	20 0/−0.21	0.16 to 0.25 (R0.16 to 0.25)	2
RV3*150	5 x 5 x 36	5 0/−0.03	5 0/−0.03	36 0/−0.25	0.25 to 0.40 (R0.25 to 0.40)	2.5
RV3*300	7 x 7 x 40	7 0/−0.036	7 0/−0.036	40 0/−0.25	0.25 to 0.40 (R0.25 to 0.40)	3.5
RV3*800	12 x 8 x 40	12 0/−0.043	8 0/−0.09	40 0/−0.25	0.40 to 0.60	6

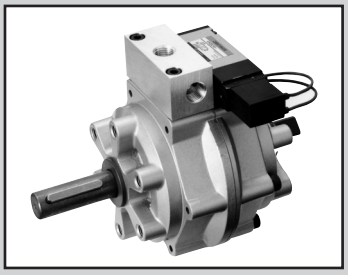

Large rotary actuator vane mechanism/with valve

RV3 SV/DW Series

- Torque size: 50, 150, 300
- Oscillating angle: 90°, 100°, 180°, 270°, 280°

RoHS CAD

Specifications

Item	Single vane mechanism RV3SV/RV3SW												Double vane mechanism RV3DV/RV3DW					
Size	50				150				300				50		150		300	
Effective torque N·m	4.7				14.7				27.9				10.1		34.3		66.6	
Actuation	Single vane												Double vane					
Working fluid	Compressed air																	
Max. working pressure MPa	0.7 (≈100 psi, 7 bar)																	
Min. working pressure MPa	0.2 (≈29 psi, 2 bar) *1																	
Proof pressure MPa	1.05 (≈150 psi, 10.5 bar)																	
Ambient temperature °C	5 (41°F) to 50 (122°F)																	
Port size (suction)	Rc1/8				Rc1/4				Rc3/8				Rc1/8		Rc1/4		Rc3/8	
Port size (exhaust)	M5				Rc1/4								M5		Rc1/4			
Oscillating angle tolerance °	90^{+3}_{0}	180^{+3}_{0}	270^{+3}_{0}	280^{+3}_{0}	90^{+3}_{0}	180^{+3}_{0}	270^{+3}_{0}	280^{+3}_{0}	90^{+3}_{0}	180^{+3}_{0}	270^{+3}_{0}	280^{+3}_{0}	90^{+3}_{+0}	100^{+3}_{+0}	90^{+3}_{+0}	100^{+3}_{+0}	90^{+3}_{+0}	100^{+3}_{+0}
Oscillating origin °	45			40	45			40	45			40	45	40	45	40	45	40
Allowable absorbed energy *2 mJ	49				225				1078				49		225		1078	
Max. operating frequency *3 cycle/min	180	90	60		120	80	50		90	60	40		180		120		90	
Volumetric capacity cm^3	51		61	62	146		179	185	244	283	352	365	42	43	127	123	244	271
Allowable L-shaped load N	588				1176				1960				588		1176		1960	
Allowable thrust load N	44.1				88.2				147				44.1		88.2		147	
Incorporated solenoid valve	4KB119/4KB129				4KB219/4KB229								4KB119/4KB129		4KB219/4KB229			
Weight kg	0.9		0.84	0.81	2.2		2.0	1.9	4.1			4.0	0.93	0.91	2.3	2.2	4.7	4.5
Switch unit weight kg *6 — Without shock absorber	0.1				0.14				0.18				0.1		0.14		0.18	
Switch unit weight kg *6 — With shock absorber 90°	0.16				0.27				0.58				0.16		0.27		0.50	
Switch unit weight kg *6 — With shock absorber 100°	0.15				0.26				0.49				0.15		0.26		0.49	
Switch unit weight kg *6 — With shock absorber 180°	0.16				0.27				0.50				0.16		0.27		0.50	
Switch unit weight kg *6 — With shock absorber 270°	0.14				0.23				0.41				0.14		0.23		0.41	
Switch unit weight kg *6 — With shock absorber 280°	0.14				0.22				0.39				0.14		0.22		0.39	
Lubrication	Not required (use turbine oil class 1 ISO VG32 if necessary for lubrication)												Not required (use turbine oil ISO VG32 if necessary for lubrication)					

*1 : The min. working pressure is 0.3 MPa when the optional shock absorber is selected.
*2 : Calculate the allowable energy with allowable inertia energy of the shaft of the rotary actuator as follows.
[Allowable energy] ≥ (1/2) x I x ω^2 x 10^3 (refer to page 1398 for details). If the formula at left is not satisfied, problems such as broken shafts may be caused.
*3 : The max. operating frequency is at a supply pressure of 0.5 MPa [without load].
*4 : A key is attached with the rotary actuator with keyway.
*5 : Contact CKD for products other than standard specifications.
*6 : The switch unit weight is the weight of two switches.

LCM
LCR
LCG
LCW
LCX
STM
STG
STS/STL
STR2
UCA2
ULK*
JSK/M2
JSG
JSC3/JSC4
USSD
UFCD
USC
UB
JSB3
LMB
LML
HCM
HCA
LBC
CAC4
UCAC2
CAC-N
UCAC-N
RCS2
RCC2
PCC
SHC
MCP
GLC
MFC
BBS
RRC
GRC
RV3*
NHS
HRL
LN
Hand
Chuk
MecHnd/Chuk
ShkAbs
FJ
FK
SpdContr
Ending

Valve specifications

Item	Specifications (4KB2 Series) *2		
Rated voltage *1 V	100 VAC (50/60 Hz)	200 VAC (50/60 Hz)	24 VDC
Starting current A	0.056/0.044	0.028/0.022	0.075
Holding current A	0.028/0.022	0.014/0.011	
Power consumption W	1.8/1.4		1.8
Voltage fluctuation range	±10%		
Thermal class	Class B molded coil		

*1 : 100 VAC and 200 VAC are available with 110 VAC and 220 VAC (60 Hz).
*2 : Refer to page 1351 for the specifications of the 4KB1 Series.
*3 : Refer to “Pneumatic Valves (CB-023SA)” for details on valves.

Switch specifications

Item	Proximity 2-wire	Proximity 3-wire
	M2V	M3V
Applications	Dedicated for programmable controller	Programmable controller, relay, IC circuit, small solenoid valve
Output method	———	NPN output
Power supply voltage	———	4.5 to 28 VDC
Load voltage/current	10 to 30 VDC, 5 to 30 mA	30 VDC or less, 100 mA or less
Indicator	LED (Lit when ON)	
Leakage current	1 mA or less	10 μA or less
Weight g	1 m:22 3 m:57 5 m:93	

Item	Reed 2-wire	
	M0V	M5V
Applications	For programmable controller, relay	Programmable controller, relay, IC circuit (without indicator lamp), serial connection
Load voltage/current	5 to 50 mA with 12/24 VDC, 7 to 20 mA with 110 VAC	50 mA or less with 5/12/24 VDC, 20 mA or less with 110 VAC
Indicator	LED (Lit when ON)	No indicator lamp
Leakage current	0 mA	
Weight g	1 m:22 3 m:57 5 m:93	

* M0 switch can be used for 24 VAC and 48 VAC within load current range of 7 to 20 mA.

Operational principle

(1) Single solenoid

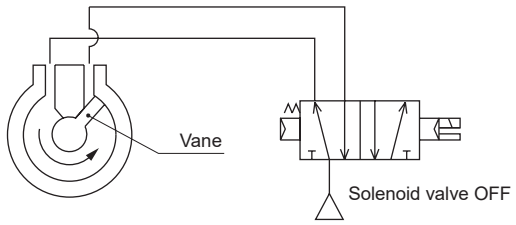

Vane returns to the oscillating origin when the solenoid valve turns OFF.

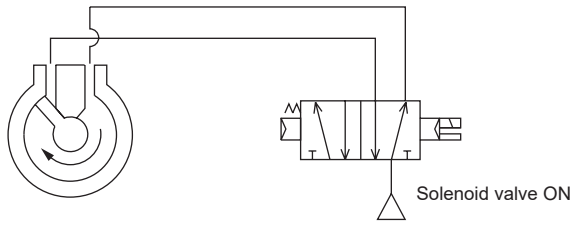

(2) Double solenoid

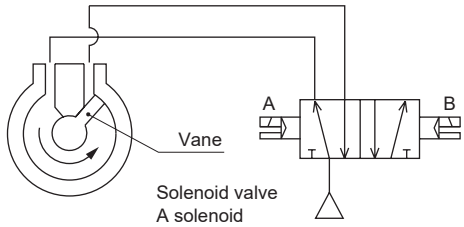

When the solenoid valve A solenoid is ON, the vane returns to the oscillating origin position.

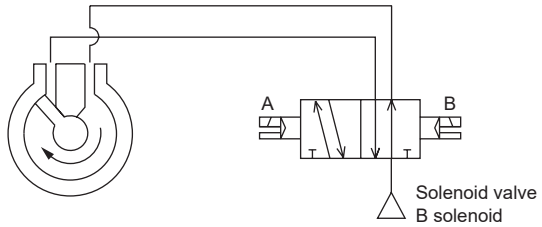

When the solenoid valve B solenoid is ON, the vane moves in the oscillating direction.

The double solenoid valve maintains the self-hold state when both the A solenoid and B solenoid are OFF.

LCM
LCR
LCG
LCW
LCX
STM
STG
STS/STL
STR2
UCA2
ULK*
JSK/M2
JSG
JSC3/JSC4
USSD
UFCD
USC
UB
JSB3
LMB
LML
HCM
HCA
LBC
CAC4
UCAC2
CAC-N
UCAC-N
RCS2
RCC2
PCC
SHC
MCP
GLC
MFC
BBS
RRC
GRC
RV3*
NHS
HRL
LN
Hand
Chuk
MecHnd/Chuk
ShkAbs
FJ
FK
SpdContr
Ending

How to order

● Large rotary actuator (with valve) RV3* V/W

RV3S V 150 - 90 - 45 - 1 - M2V - R - C

Ⓐ Model No.
Ⓑ Valve
Ⓒ Nominal size
Ⓓ Oscillating angle
Ⓔ Oscillating origin *1
Ⓕ Valve voltage
Ⓖ Switch
Ⓗ Switch quantity
Ⓘ Option *2, * 3, *4

Code	Description	Ⓐ Model No. Single vane mechanism RV3S	Double vane mechanism RV3D
Ⓑ Valve			
V	Single solenoid	●	●
W	Double solenoid	●	●
Ⓒ Nominal size			
50	Effective torque 0.5 MPa	4.7 N·m	10.1 N·m
150		14.7 N·m	34.3 N·m
300		27.9 N·m	66.6 N·m
Ⓓ Oscillating angle			
90	90°	●	●
100	100°		●
180	180°	●	
270	270°	●	
280	280° (The type with switch is not available when the shock absorber is selected.)	●	
Ⓔ Oscillating origin			
40	40°	●	●
45	45°	●	●
Ⓕ Valve voltage			
1	100 VAC	●	●
2	200 VAC	●	●
3	24 VDC	●	●

Ⓖ Switch

L-shaped lead wire	Contact	Voltage AC	Voltage DC	Indicator	Lead wire	-	-
M2V*	Proximity		●	1-color LED	2-wire	●	●
M3V*			●		3-wire	●	●
M0V*	Reed	●	●		2-wire	●	●
M5V*		●	●	no indicator lamp		●	●
* Lead wire length							
Blank	1 m (standard)					●	●
3	3 m (option)					●	●
5	5 m (option)					●	●

Code	Description	Single vane mechanism	Double vane mechanism
Ⓗ Switch quantity			
R	With clockwise rotation detection 1 piece	●	●
L	With counterclockwise rotation detection 1 piece	●	●
D	2	●	●

Ⓘ Option

Nominal size		50	150	300	50	150	300
Blank	No option	●	●	●	●	●	●
FA	With flange bracket	●	●		●	●	
LS	With foot bracket	●	●	●	●	●	●
C	With shock absorber	●	●	●	●	●	●

⚠ Precautions for model No. selection

*1 : Refer to the table below for the relation of the oscillating angle and oscillating origin.

Relation of oscillating angle and oscillating origin

Ⓔ Oscillating origin / Ⓓ Oscillating angle	40°	45°
90°		●
100°	●	
180°		●
270°		●
280°	●	

*2 : The mounting bracket (FA, LS) is included at shipment. Refer to page 1371 for dimensions.
*3 : Refer to page 1382 for shock absorber (C).
*4 : The switch cannot be installed with the oscillating angle 280 shock absorber.

[Example of model No.]

RV3SV150-90-45-M2V-R-C

Model: Large rotary actuator with valve

Ⓐ Model No. : RV3S
Ⓑ Valve : Single solenoid
Ⓒ Size : 150
Ⓓ Oscillating angle : 90°
Ⓔ Oscillating origin : 45°
Ⓕ Valve voltage : 100 VAC
Ⓖ Switch : M2V switch, lead wire length 1 m
Ⓗ Switch quantity : With clockwise rotation detection 1 piece
Ⓘ Option : With shock absorber

How to order switch unit

RVU50 - C - 90 - M2V - R

Ⓐ Model
Ⓑ Unit
Ⓒ Oscillating angle
Ⓓ Switch model No.
Ⓔ Switch quantity

Code	Description
Ⓐ Model	
RVU50	Applicable actuator: RV3S/D50
RVU150	Applicable actuator: RV3S/D150
RVU300	Applicable actuator: RV3S/D300
Ⓑ Unit	
Blank	Standard products
C	With shock absorber
Ⓒ Oscillating angle	
90	90°
100	100°
180	180°
270	270°
280	280° (“C” (with shock absorber) cannot be selected.)

Ⓓ Switch model No.

L-shaped lead wire	Contact	Voltage AC	Voltage DC	Indicator	Lead wire
M2V*	Prox.		●	1-color LED	2-wire
M3V*	Prox.		●	1-color LED	3-wire
M0V*	Reed	●	●	1-color LED	2-wire
M5V*	Reed	●	●	No indicator lamp	2-wire

*** Lead wire length**	
Blank	1 m (standard)
3	3 m (option)
5	5 m (option)

Ⓔ Switch quantity	
R	With clockwise rotation detection 1 piece
L	With counterclockwise rotation detection 1 piece
D	2

⚠ Precautions for model No. selection

Note: When the type for shock absorber is selected, the shock absorber body must be purchased separately.

[Example of model No.]

RVU50-C-90-M2V-R

Model: Switch unit
Ⓐ Model : RV3S/D50
Ⓑ Unit : With shock absorber
Ⓒ Oscillating angle : 90°
Ⓓ Switch model No. : M2V switch, lead wire length 1 m
Ⓔ Switch quantity : With clockwise rotation detection 1 piece

LCM
LCR
LCG
LCW
LCX
STM
STG
STS/STL
STR2
UCA2
ULK*
JSK/M2
JSG
JSC3/JSC4
USSD
UFCD
USC
UB
JSB3
LMB
LML
HCM
HCA
LBC
CAC4
UCAC2
CAC-N
UCAC-N
RCS2
RCC2
PCC
SHC
MCP
GLC
MFC
BBS
RRC
GRC
RV3*
NHS
HRL
LN
Hand
Chuk
MecHnd/Chuk
ShkAbs
FJ
FK
SpdContr
Ending

Dimensions CAD

● RV3 SV/DW 50

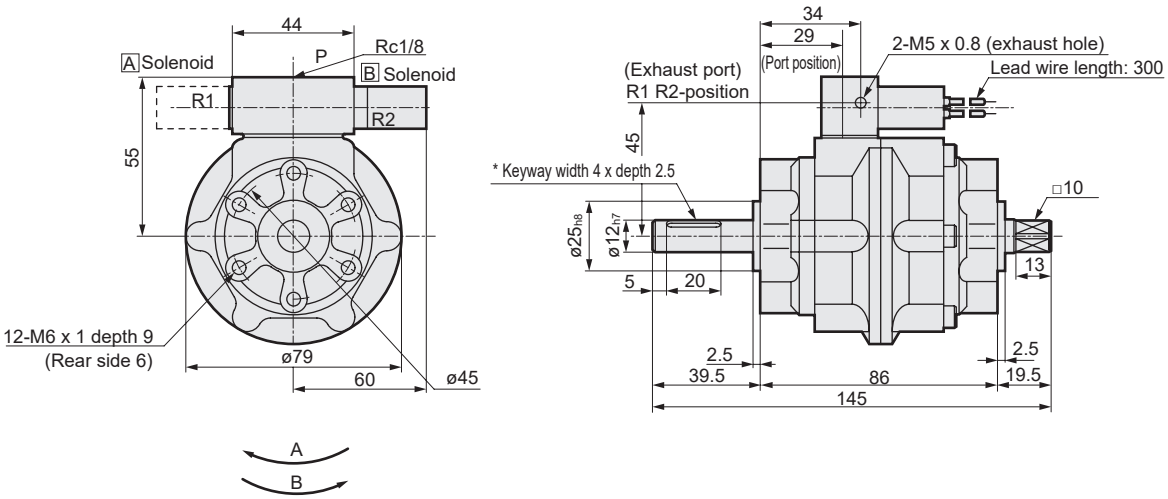

Single solenoid	Double solenoid
ON → A direction	B solenoid ON → A direction
OFF → B direction	A solenoid ON → B direction

* The key is attached. Refer to page 1371 for the key dimensions.

● RV3 SV/DW 150/300

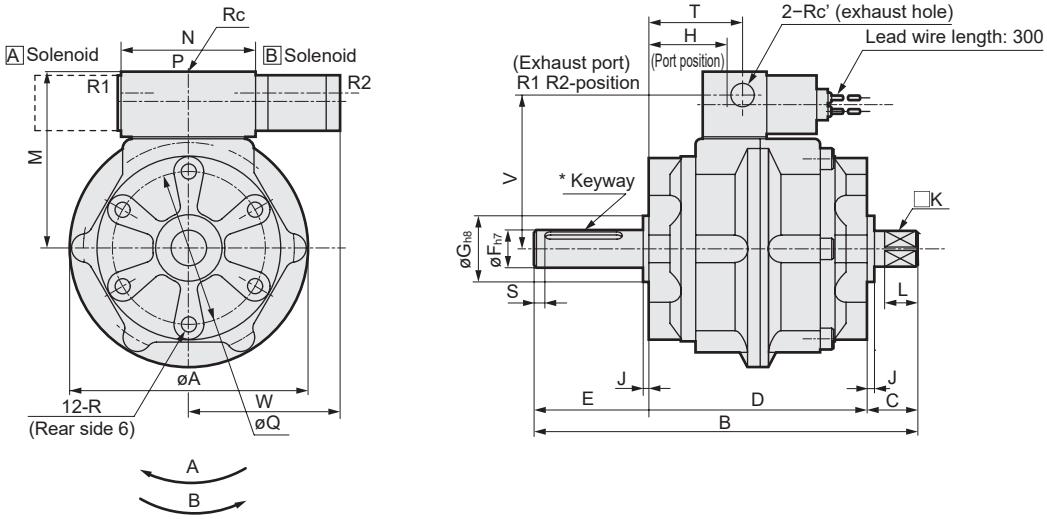

Single solenoid	Double solenoid
ON → A direction	B solenoid ON → A direction
OFF → B direction	A solenoid ON → B direction

* The key is attached. Refer to page 1371 for the key dimensions.

Code / Model No.	A	B	C	D	E	F	G	H	J	K	L	M	N	Rc	Rc'	Q	R	S	T	V	W	Key groove W x D x L
RV3*V150	110	180	23.5	103	53.5	17	30	36	3	13	16	79	62	1/4	1/4	70	M8 depth 12	5	41	65	70	5x3x36
RV3*V300	141.5	220	30	125	65	25	45	47.5	3.5	19	22	95	72	3/8	1/4	80	M10 depth 15	5	50.5	80	70	7x4x40

MEMO

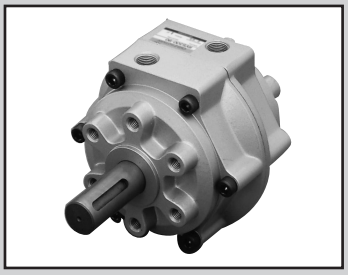

Large rotary actuator low hydraulic

RV3$^{S}_{D}$H Series

- Torque size: 50/150/300/800
- Oscillating angle: 90°/100°/180°/270°/280°

JIS symbol

RoHS CAD

Specifications

Item	RV3SH/RV3DH			
Size	50	150	300	800
Working fluid	Hydraulic fluid			
Max. working pressure MPa	1.0 (≈150 psi, 10 bar)			
Min. working pressure MPa	0.2 (≈29 psi, 2 bar) *1			
Proof pressure MPa	1.5 (≈220 psi, 15 bar)			
Ambient temperature °C	5 (41°F) to 60 (140°F)			

*1 : The min. working pressure is 0.3 MPa when the optional shock absorber is selected.
*2 : Use hydraulic fluid of JIS turbine oil type 1 ISO VG32 or equivalent viscosity for lubricant. However, note that some are inapplicable with flame-resistant hydraulic oil.
Hydraulic fluid of viscosity 40 mm²/s (40 cSt) is recommended at working oil temperature.
For oil, use Fuji Kosan/Fukkol Hydrol x 22 or equivalent oil such as MITSUBISHI/Diamond Power Fluid 18, Showa-Shell/SHELL Tellus Oil 22, ESSO/Univis J26, Mobile DTE22, Cosmohydro HV22, JX Nippon Oil & Energy Corporation/Highlandwide 22 or Idemitsu/Daphne Super Hydro 22 WR.
*3 : For information about weight, refer to the weight of the standard large rotary actuator with a vane mechanism (page 1364).

Switch specifications

Item	Proximity 2-wire	Proximity 3-wire
	M2V	M3V
Applications	Dedicated for programmable controller	For programmable controller, relay, IC circuit, compact solenoid valve
Output method	———	NPN output
Power supply voltage	———	4.5 to 28 VDC
Load voltage/current	10 to 30 VDC, 5 to 30 mA	30 VDC or less, 100 mA or less
Indicator	LED (Lit when ON)	
Leakage current	1 mA or less	10 μA or less
Weight g	1 m:22 3 m:57 5 m:93	

Item	Reed 2-wire	
	MOV	M5V
Applications	For programmable controller, relay	Programmable controller, relay, IC circuit (without indicator lamp), serial connection
Load voltage/current	5 to 50 mA with 12/24 VDC, 7 to 20 mA with 110 VAC	50 mA or less with 5/12/24 VDC, 20 mA or less with 110 VAC
Indicator	LED (Lit when ON)	No indicator lamp
Leakage current	0 mA	
Weight g	1 m:22 3 m:57 5 m:93	

* M0 switch can be used for 24 VAC and 48 VAC within load current range of 7 to 20 mA.
*1 : Refer to Ending Page 1 for other switch specifications.

Min. oscillating time

Unit: S

Item		RV3*H50	RV3*H150	RV3*H300	RV3*H800	Vane number
Oscillating angle	90°	0.3	0.4	0.4	0.7	Single vane
	180°	0.5	0.7	0.7	1.3	
	270°	0.7	0.9	1.0	1.8	
	280°	0.7	1.0	1.0	1.8	
	90°	0.6	1.3	1.9	2.4	Double vane
	100°	0.7	1.4	2.1	2.6	

Structure

● Basic structure is exactly the same as the pneumatic.

Item		RV3*H50	RV3*H150	RV3*H300	RV3*H800
Port size		Rc1/8	Rc1/4	Rc3/8	Rc1/2
Orifice size	Low hydraulic specs	ø7	ø9.5	ø13	ø16
	Pneumatic	ø2.8	ø4	ø4.5	ø6

Note: The double vane is the same as the pneumatic, as shaft orifice diameter cannot be changed.

● Volumetric capacity

Rotary actuator						
Model No.	Volumetric capacity (cm3)					Port size
	90°	100°	180°	270°	280°	
RV3SH50	51	—	51	61	62	Rc1/8
RV3DH50	42	43	—	—	—	
RV3SH150	146	—	146	179	185	Rc1/4
RV3DH150	127	123	—	—	—	
RV3SH300	244	—	283	352	365	Rc3/8
RV3DH300	244	271	—	—	—	
RV3SH800	754	-	869	1036	1046	Rc1/2
RV3DH800	754	754	-	-	-	

LCM
LCR
LCG
LCW
LCX
STM
STG
STS/STL
STR2
UCA2
ULK*
JSK/M2
JSG
JSC3/JSC4
USSD
UFCD
USC
UB
JSB3
LMB
LML
HCM
HCA
LBC
CAC4
UCAC2
CAC-N
UCAC-N
RCS2
RCC2
PCC
SHC
MCP
GLC
MFC
BBS
RRC
GRC
RV3*
NHS
HRL
LN
Hand
Chuk
MecHnd/Chuk
ShkAbs
FJ
FK
SpdContr
Ending

How to order

● Large rotary actuator (low hydraulic) RV3*H

RV3SH 50 - 90 - 45 - M2V - R - C

Ⓐ Model No.

Ⓑ Nominal size

Ⓒ Oscillating angle

Ⓓ Oscillating origin *1

Ⓔ Switch

Ⓕ Switch quantity

Ⓖ Option *2, *3 *4

Code	Description	Ⓐ Model No. Single vane mechanism: RV3SH	Ⓐ Model No. Double vane mechanism: RV3DH
Ⓑ Nominal size			
50	Effective torque 0.5 MPa	4.7 N·m	10.1 N·m
150		14.7 N·m	34.3 N·m
300		27.9 N·m	66.6 N·m
800		102 N·m	206 N·m
Ⓒ Oscillating angle			
90	90°	●	●
100	100°		●
180	180°	●	
270	270°	●	
280	280° (The type with switch is not available when the shock absorber is selected.)	●	
Ⓓ Oscillating origin			
40	40°	●	●
45	45°	●	●

Ⓔ Switch

L-shaped lead wire	Contact	Voltage AC	Voltage DC	Indicator	Lead wire	-	-
M2V*	Proximity		•	1-color LED	2-wire	●	●
M3V*			•		3-wire	●	●
M0V*	Reed	•	•		2-wire	●	●
M5V*		•	•	No indicator lamp		●	●
* Lead wire length							
Blank	1 m (standard)					●	●
3	3 m (option)					●	●
5	5 m (option)					●	●

Ⓕ Switch quantity			
R	With clockwise rotation detection 1 piece	●	●
L	With counterclockwise rotation detection 1 piece	●	●
D	2	●	●

Ⓖ Option

Nominal size		50	150	300	800	50	150	300	800
Blank	No option	●	●	●	●	●	●	●	●
FA	With flange bracket	●	●			●	●		
LS	With foot bracket	●	●	●	●	●	●	●	●
C	With shock absorber	●	●	●	●	●	●	●	●

⚠ Precautions for model No. selection

*1 : Refer to the table below for the relation of the oscillating angle and oscillating origin.

Relation of oscillating angle and oscillating origin

Ⓒ Oscillating angle \ Ⓓ Oscillating origin	40°	45°
90°		●
100°	●	
180°		●
270°		●
280°	●	

*2 : The mounting bracket (FA, LS) is included at shipment. Refer to page 1371 for dimensions.

*3 : Refer to page 1382 for shock absorber (C).

*4 : The switch cannot be installed with the oscillating angle 280 shock absorber.

[Example of model No.]

RV3SH50-90-45-M2V-D-C

Model: Large rotary actuator low hydraulic

Ⓐ Model No. : RV3SH
Ⓑ Size : 50
Ⓒ Oscillating angle : 90°
Ⓓ Oscillating origin : 45°
Ⓔ Switch : M2V switch, lead wire length 1 m
Ⓕ Switch quantity : With clockwise rotation detection 1 piece
Ⓖ Option : With shock absorber

How to order switch unit

RVU50 - C - 90 - M2V - R

Ⓐ Model
Ⓑ Unit
Ⓒ Oscillating angle
Ⓓ Switch model No.
Ⓔ Switch quantity

Code	Description
Ⓐ Model	
RVU50	Applicable actuator: RV3S/D50
RVU150	Applicable actuator: RV3S/D150
RVU300	Applicable actuator: RV3S/D300
RVU800	Applicable actuator: RV3S/D800
Ⓑ Unit	
Blank	Standard products
C	With shock absorber
Ⓒ Oscillating angle	
90	90°
100	100°
180	180°
270	270°
280	280° ("C" (for shock absorber) cannot be selected.)

Ⓓ Switch model No.			
M2V*	Prox.	1-color LED	2-wire
M3V*			3-wire
M0V*	Reed	No indicator lamp	2-wire
M5V*			

* Lead wire length	
Blank	1 m (standard)
3	3 m (option)
5	5 m (option)

Ⓔ Switch quantity	
R	With clockwise rotation detection 1 piece
L	With counterclockwise rotation detection 1 piece
D	2

⚠ Precautions for model No. selection

Note: When the type for shock absorber is selected, the shock absorber body must be purchased separately.

[Example of model No.]

RVU50-C-90-M2V-R

Model: Switch unit

Ⓐ Model : RV3S/D50
Ⓑ Unit : With shock absorber
Ⓒ Oscillating angle : 90°
Ⓓ Switch model No. : M2V switch, lead wire length 1 m
Ⓔ Switch quantity : With clockwise rotation detection 1 piece

Dimensions

Dimensions are the same as the large rotary actuator vane mechanism/standard RV3 S/D Series. Refer to page 1369.

Shock absorber

RVC Series

- Torque size: 50/150/300/800
- Absorbed energy: 2.9/9.8/19.6/58.8 J

RoHS CAD

Specifications

Descriptions		RVC			
Size		50	150	300	800
Load range kg/m^2		0.098	0.294	0.588	1.961
Allowable absorbed energy J		2.9	9.8	19.6	58.8
Max. colliding angular speed rad/s		14.8	13.0	11.3	9.6
Maximum energy capacity per minute*1 J/min		20	72	140	350
Ambient temperature °C		5 to 50			
Absorbing angle (one side) rad		0.19	0.20	0.24	0.26
Weight kg		0.24	0.42	0.78	1.62
Jaw weight kg	90°	0.07	0.15	0.36	1.0
	100°	0.07	0.14	0.35	1.0
	180°	0.07	0.15	0.37	1.0
	270°	0.05	0.11	0.28	0.8
	280°	0.05	0.10	0.25	0.7

*1: Energy capacity per minute = absorbed energy x n times/min n: No. of times lever contacts cushion piston
*2: When using with the shock absorber, set the rotary actuator's working pressure to 0.3 MPa and over.

How to order

Body

RVC50

Model	Applicable rotary actuator
RVC50	RV3*50
RVC150	RV3*150
RVC300	RV3*300
RVC800	RV3*800 (without switch) *1

*1:The shock absorber for RV3*800 (with switch) is as follows:
When the oscillating origin is 40°: RVU800-A1-C-40
For oscillating origin 45°: RVU800-A1-C-45

● Lever for shock absorber

RVC50 - 90 - T

Ⓐ Model
Ⓑ Oscillating angle
Ⓒ Part (lever)

Code	Description
Ⓐ Model	
RVC50	For RV3*50
RVC150	For RV3*150
RVC300	For RV3*300
RVC800	For RV3*800
Ⓑ Oscillating angle	
90	90°
100	100°
180	180°
270	270°
280	280°
Ⓒ Part (lever)	
T	Lever for shock absorber

Operational principle

When the lever installed on the rotary actuator shaft hits the piston, the generated energy is converted to pressure (hydraulic pressure) on the back of the piston.
This pressure energy becomes the thermal energy when it passes through the gap between the piston and cylinder bore and then the adjustment needle part, and is released into the air from the body surface. It will be consumed before the piston stops at the stroke end. The piston on the opposite side is pressurized by the spring force and returns to the origin.

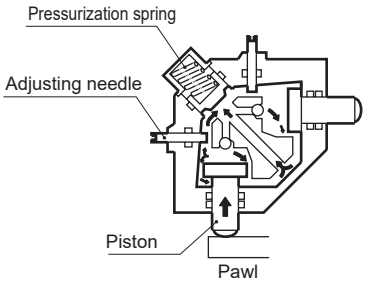

Impact energy

1 .Obtain the moment of inertia from the size of the load, and confirm that it is within the load range.
2. Check that the colliding angular speed is within the range...
$\omega_0 \approx 1.2\omega$
ω_0: Colliding angular speed°(rad/s)
ω: Average angular speed°(rad/s)
3. Obtain collision energy from the load and colliding angular speed.
$E_1 = 1/2 I\omega_0^2$
I: Moment of inertia (kg·m^2)
ω_0: Colliding angular speed (rad/s)
4. Obtain the energy generated by the torque of the rotary actuator.
$E_2 = 1/2 T\theta'$
T: Torque of rotary actuator (N·m)
θ': Shock absorber absorbing angle (per side) (rad)
5. Confirm that E_1+E_2 is less than the max. absorbed energy.
6. Obtain energy per minute from frequency.
$E_m = (E_1+E_2) \times n$
n: No. of times lever contacts cushion piston.
Confirm that Em is less than or equal to the max. energy per minute.

Dimensions (RVC 50/150/300)

(Unit: mm)

● RVC 50/150/300

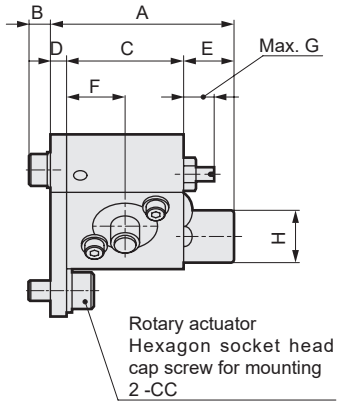

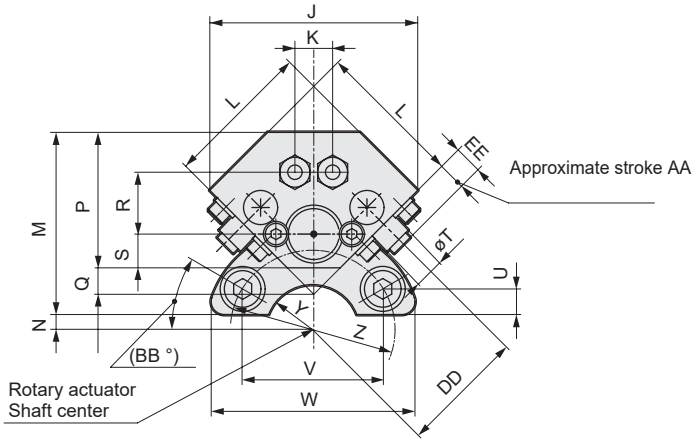

Note: Figure shows mounted lever for 270°.

Code / Model No.	A	B	C	D	E	F	G	H	J	K	L	M	N	P	Q	R	S	T	U	V	W	Y	Z	AA	BB	CC	DD	EE
RVC50	50.5	6	32	4.5	14	16	8.5	14.4	56.6	9.9	40	50	4	37	7.1	17	9.2	8	7.2	39	56	12.5	ø45	6.5	30	M 6 x 12ℓ	34	8
RVC150	56.5	7.2	36	4.5	16	18	8.5	18.4	70.7	11.3	50	62	9.5	49	8.4	25.5	11.4	10	8	60.6	80	15	ø70	10	30	M 8 x 16ℓ	46	12
RVC300	62.5	7.2	42	4.5	16	21	12	22.5	91.9	12.7	65	87	8	61	14.2	33.2	14.1	12	12	69.2	95	22.5	ø80	15	30	M 10 x 20ℓ	62	18

Lever for shock absorber dimensions

● Oscillating angle 90° (oscillating origin 45°)

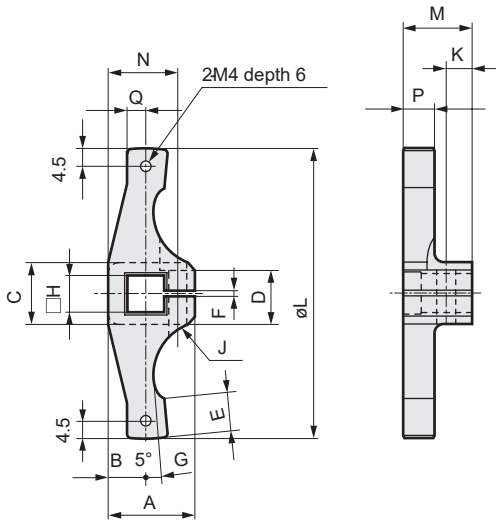

● Oscillating angle 100° (oscillating origin 40°)

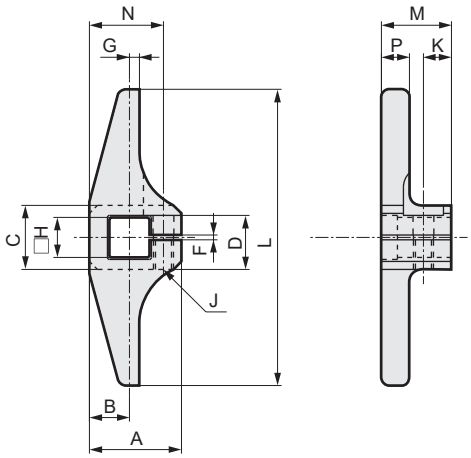

Material: S50C or equivalent

Code / Model No.	A	B	C	D	E	F	G	H	J	K	L	M	N	P	Q
RVC50 -90-T	23	10	16	13.7	10	1.2	2.5	10	M5	7	76	18	18.5	8	5
RVC150-90-T	28	12	24	19.5	12	1.2	3.9	13	M6	7.5	102	20	23	10	5
RVC300-90-T	40	18	35	30.5	14	1.2	5.4	19	M8	9	136	23.5	33.5	12	9

Material: S50C or equivalent

Code / Model No.	A	B	C	D	F	G	H	J	K	L	M	N	P
RVC50 -100-T	23	10	16	13.5	1.2	2.5	10	M5	7	74	17.5	18.5	7
RVC150-100-T	28	12	24	19.5	1.2	4	13	M6	9	102	20	23	10
RVC300-100-T	40	18	35	30.5	1.2	5.5	19	M8	11	136	23.5	33.5	12

LCM
LCR
LCG
LCW
LCX
STM
STG
STS/STL
STR2
UCA2
ULK*
JSK/M2
JSG
JSC3/JSC4
USSD
UFCD
USC
UB
JSB3
LMB
LML
HCM
HCA
LBC
CAC4
UCAC2
CAC-N
UCAC-N
RCS2
RCC2
PCC
SHC
MCP
GLC
MFC
BBS
RRC
GRC
RV3*
NHS
HRL
LN
Hand
Chuk
MecHnd/Chuk
ShkAbs
FJ
FK
SpdContr
Ending

Lever for shock absorber dimensions (RVC 50/150/300)

● Oscillating angle 180° (oscillating origin 45°)

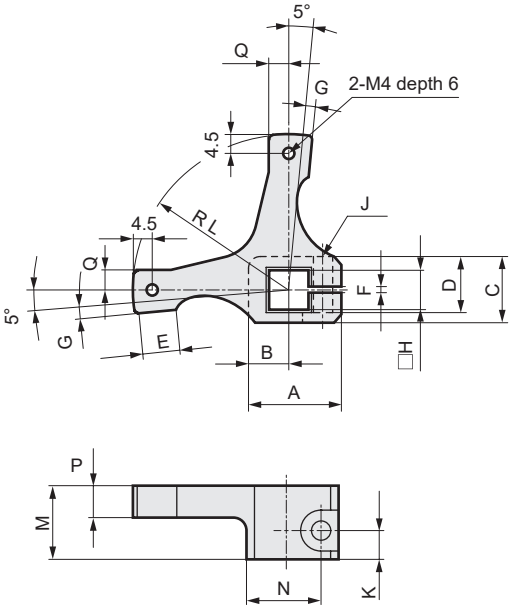

Material: S50C or equivalent

Code / Model No.	A	B	C	D	E	F	G	H	J	K	L	M	N	P	Q
RVC50 -180-T	23	10	16	13.7	10	1.2	2.5	10	M5	7	38	18	18.5	8	5
RVC150-180-T	28	12	24	19.5	12	1.2	3.9	13	M6	9	51	20	23	10	5
RVC300-180-T	40	18	35	30.5	14	1.2	5.4	19	M8	11	68	23.5	33.5	12	9

● Oscillating angle 270° (oscillating origin 45°)

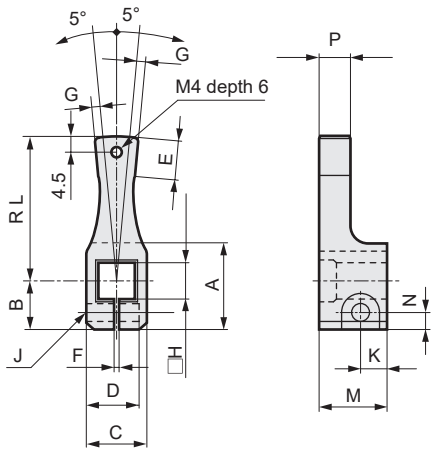

Material: SCM435 or equivalent

Code / Model No.	A	B	C	D	E	F	G	H	J	K	L	M	N	P
RVC50 -270-T	23	13	16	13.7	10	1.2	2.6	10	M5	7	38	18	4.5	8
RVC150-270-T	28	16	24	19.5	12	1.2	4	13	M6	9	51	20	5	10
RVC300-270-T	40	22	35	30.5	14	1.2	5.5	19	M8	11	68	23.5	6.5	12

● Oscillating angle 280° (oscillating origin 40°)

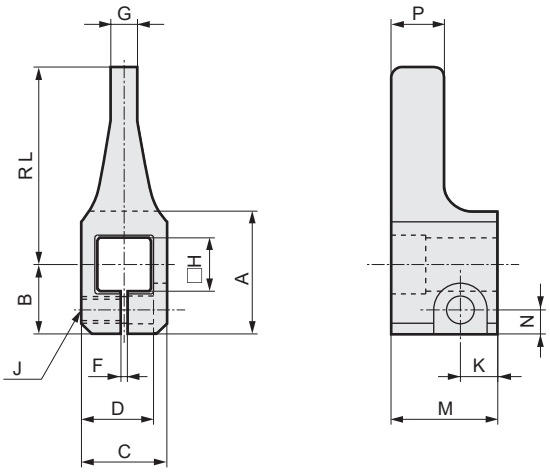

Material: S50C or equivalent

Code / Model No.	A	B	C	D	F	G	H	J	K	L	M	N	P
RVC50 -280-T	23	13	16	13.5	1.2	5	10	M5	7	37	20	4.5	10
RVC150-280-T	28	16	24	19.5	1.2	8	13	M6	9	51	20	5	10
RVC300-280-T	40	22	35	30.5	1.2	11	19	M8	11	68	24	6.5	12.5

● Oscillating angle 100° (with magnet)

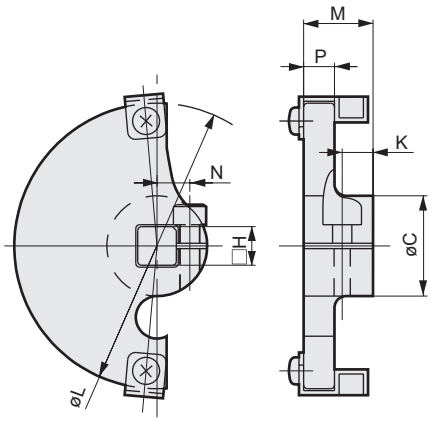

Material: S50C or equivalent

Code / Model No.	C	H	K	L	M	N	P
RVU50-100-A1-C	26	10	8	74	18	8.5	8
RVU150-100-A1-C	32	13	9	102	20	11	10
RVU300-100-A1-C	48	19	11	136	23.5	15	12

Note) Model No. with options such as switch, valve, and shock absorber, etc., is listed on pages 1395 and 1396.

LCM
LCR
LCG
LCW
LCX
STM
STG
STS/STL
STR2
UCA2
ULK*
JSK/M2
JSG
JSC3/JSC4
USSD
UFCD
USC
UB
JSB3
LMB
LML
HCM
HCA
LBC
CAC4
UCAC2
CAC-N
UCAC-N
RCS2
RCC2
PCC
SHC
MCP
GLC
MFC
BBS
RRC
GRC
RV3*
NHS
HRL
LN
Hand
Chuk
MecHnd/Chuk
ShkAbs
FJ
FK
SpdContr
Ending

Dimensions (RVC800)

● RVC800

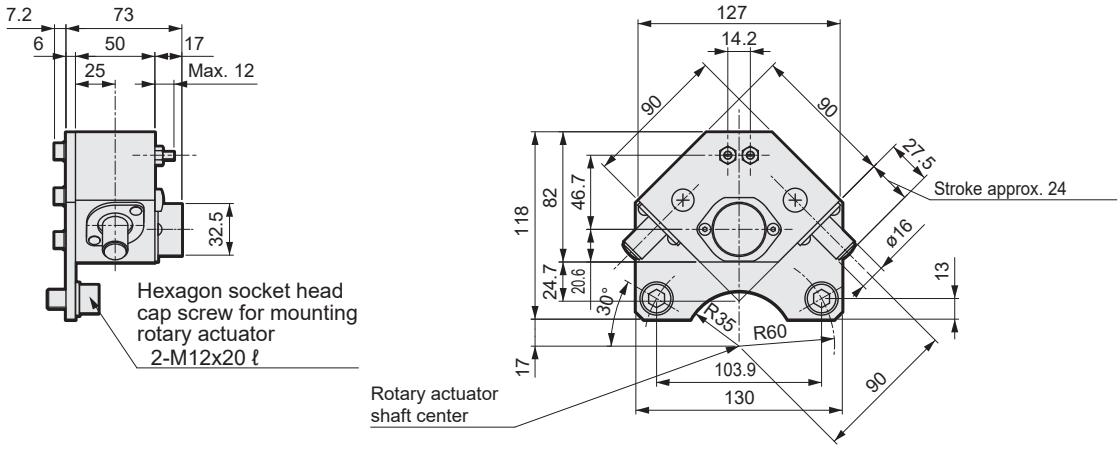

Lever for shock absorber dimensions (RVC800)

● Oscillating angle 90° (oscillating origin 45°)

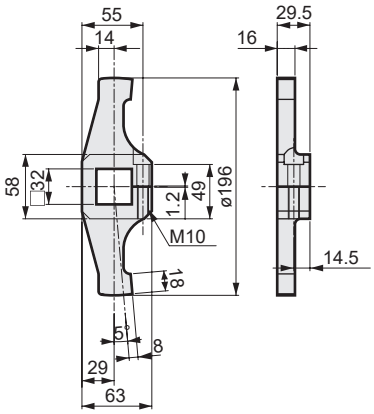

● Oscillating angle 100° (oscillating origin 40°)

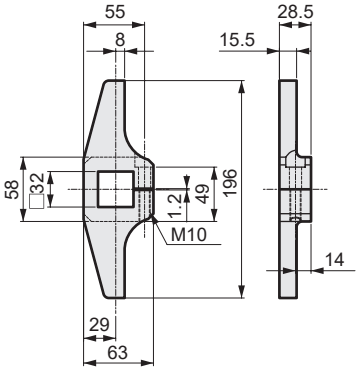

● Oscillating angle 180° (oscillating origin 45°)

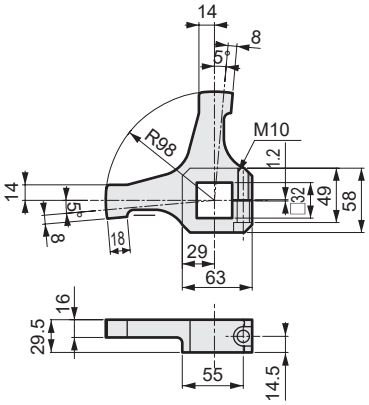

● Oscillating angle 270° (oscillating origin 45°)

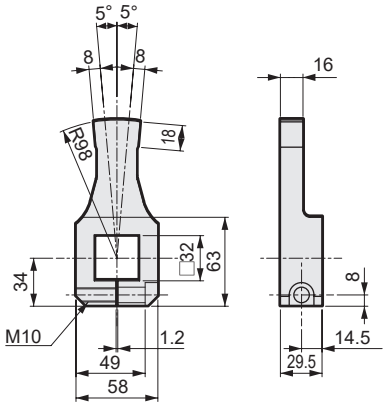

● Oscillating angle 280° (oscillating origin 40°)

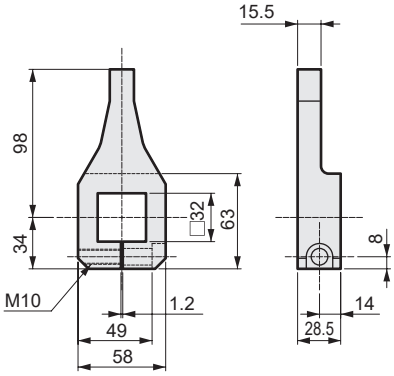

● Oscillating angle 100° (with magnet)

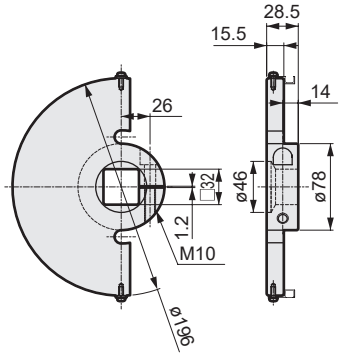

LCM
LCR
LCG
LCW
LCX
STM
STG
STS/STL
STR2
UCA2
ULK*
JSK/M2
JSG
JSC3/JSC4
USSD
UFCD
USC
UB
JSB3
LMB
LML
HCM
HCA
LBC
CAC4
UCAC2
CAC-N
UCAC-N
RCS2
RCC2
PCC
SHC
MCP
GLC
MFC
BBS
RRC
GRC
RV3*
NHS
HRL
LN
Hand
Chuk
MecHnd/Chuk
ShkAbs
FJ
FK
SpdContr
Ending

Switch unit: Compact standard with valve
Specifications

Item	Proximity switch SR-*(-U)
Applications	For programmable controller/relay/IC circuit/compact solenoid valve
Power supply voltage	5 VDC to 30 VDC
Load voltage/current	5 to 30 VDC, 200 mA or less
Current consumption	20 mA or less with 24 VDC
Internal voltage drop	1.5V or less
Indicator	LED (Lit when ON)
Leakage current	10 μA or less
Lead wire length	1 m (oil resistant vinyl cabtyre cable 4-conductor 0.2 mm^2)
Shock resistance	490 m/s^2
Insulation resistance	100 MΩ or more with 500 V megger
Withstand voltage	No failure after 1 minute of 1,000 VAC application.
Ambient temperature	5 to 60°C
Degree of protection	IEC standards IP67, JIS C0920 (water tight)

* mark indicates a rotary actuator size. (3, 10, 20)

How to order

● How to order switch unit

RV3S - SR-3 - 90 - 45 - U

Ⓐ Model

Code	Description
Ⓐ Model	
SR-3	Applicable actuator: RV^S_D33
SR-10	Applicable actuator: RV^S_D310
SR-20	Applicable actuator: RV^S_D320
SR-30	Applicable actuator: RV^S_D330

Ⓑ Oscillating angle

Ⓑ Oscillating angle	
90	90°
180	180°
270	270°

Ⓒ Oscillating origin

Ⓒ Oscillating origin					
Model		SR-3	SR-10	SR-20	SR-30
45	45°	●	●	●	●
90	90°	●	●	●	

Ⓓ Lead wire direction

Ⓓ Lead wire direction	
Blank	With straight lead wire switch
U	With L-shaped lead wire switch

⚠ Precautions for model No. selection

*1 : The type with switch is not available for the axial port position direction "S".

[Example of model No.]

RV3S-SR-3-90-45-U

Model: Switch unit
Ⓐ Model : For RV3S3
Ⓑ Oscillating angle : 90°
Ⓒ Oscillating origin : 45°
Ⓓ Lead wire direction : L-shaped lead wire

Switch internal wiring diagram

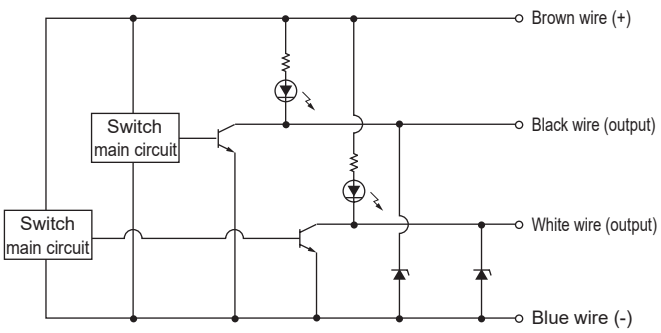

Switch wiring procedure

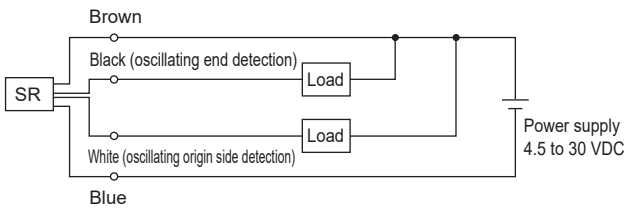

Note: Use same power supply for switch and load.

Hysteresis and operational range of switch

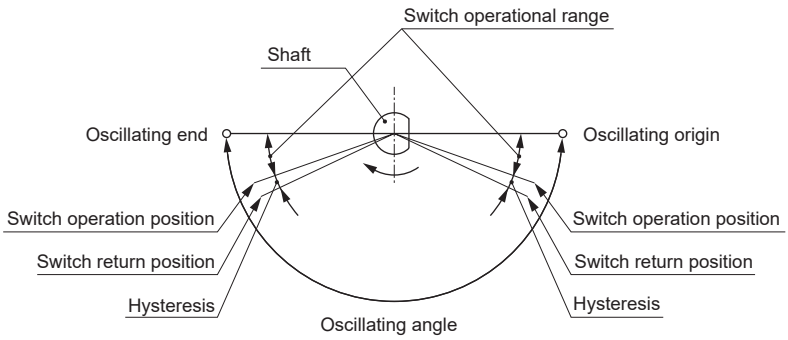

Rotary actuator body	Operational range	Hysteresis
RV3 $^{S}_{D}$ -3	15°±7°	3° or less
RV3 $^{S}_{D}$ -10		
RV3 $^{S}_{D}$ -20		

The switch is fixed, and the position cannot be adjusted.

Switch unit configurations

Configurations

- Rotor set screw
- Rotor body
- Switch unit mounting screw
- Switch unit body

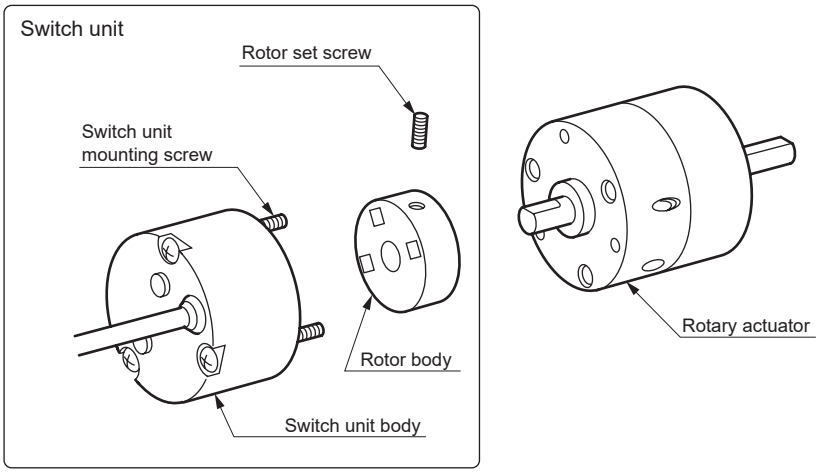

* Switch unit can be installed onto rotary actuator without switch.
RV3S1 with switch is not available.

LCM
LCR
LCG
LCW
LCX
STM
STG
STS/STL
STR2
UCA2
ULK*
JSK/M2
JSG
JSC3/JSC4
USSD
UFCD
USC
UB
JSB3
LMB
LML
HCM
HCA
LBC
CAC4
UCAC2
CAC-N
UCAC-N
RCS2
RCC2
PCC
SHC
MCP
GLC
MFC
BBS
RRC
GRC
RV3*
NHS
HRL
LN
Hand
Chuk
MecHnd/Chuk
ShkAbs
FJ
FK
SpdContr
Ending

Switch unit: Compact oscillating angle variable Specifications

Item	Proximity switch FR-*(-U)
Applications	Programmable controller, relay, IC circuit
Power supply voltage	5 VDC to 30 VDC
Load voltage	5 VDC to 30 VDC
Load current	5 mA to 200 mA
Current consumption	24 VDC: 20 mA or less, 12 VDC: 10 mA or less, 5 VDC: 4 mA or less
Internal voltage drop	1.5 V or less
Indicator	LED (Lit when ON)
Leakage current	10 μA or less
Lead wire length	1.0 m (oil resistant black 3-conductor cable)
Shock resistance	490 m/s^2
Insulation resistance	100 MΩ or more with 500 V megger
Withstand voltage	No failure after 1 minute of 1,500 VAC application.
Ambient temperature	5 to 60°C
Degree of protection	IEC standards IP67, JIS C0920 (water tight)

* Mark indicates rotary actuator size. (3, 10, 20, 30)

Hysteresis of switch and operational range

Switch	Operational range	Hysteresis
CT-3	23°±7°	Approx. 2°

How to order

● Switch unit

RV3S - FR-3 - U

Ⓐ Model

Ⓑ Lead wire direction

Code	Description
Ⓐ Model	
FR-3	Applicable actuator: RV3$^{S}_{D}$A3
FR-10	Applicable actuator: RV3$^{S}_{D}$A10
FR-20	Applicable actuator: RV3$^{S}_{D}$A20
FR-30	Applicable actuator: RV3$^{S}_{D}$A30
Ⓑ Lead wire direction	
Blank	With straight lead wire switch
U	With L-shaped lead wire switch

[Example of model No.]

RV3S-FR-3-U

Model: Switch unit angle variable

Ⓐ Model : For RV3SA3

Ⓑ Lead wire direction : L-shaped lead wire

Switch internal wiring diagram

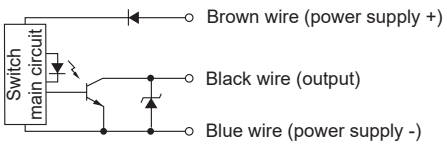

Switch wiring procedure

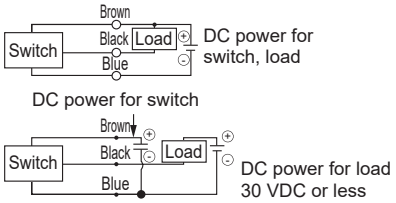

LCM
LCR
LCG
LCW
LCX
STM
STG
STS/STL
STR2
UCA2
ULK*
JSK/M2
JSG
JSC3/JSC4
USSD
UFCD
USC
UB
JSB3
LMB
LML
HCM
HCA
LBC
CAC4
UCAC2
CAC-N
UCAC-N
RCS2
RCC2
PCC
SHC
MCP
GLC
MFC
BBS
RRC
GRC
RV3*
NHS
HRL
LN
Hand
Chuk
MecHnd/Chuk
ShkAbs
FJ
FK
SpdContr
Ending

Oscillating angle and switch mounting position

● When the oscillating angle variable RV3*A Series with switch is selected, the switch unit is attached with the product. Install and adjust the angle setting stopper at the set angle, and then install the switch with the following combination.

Oscillating angle	Switch combination
30° to 186°	Combination A
187° to 270°	Combination B

Combination A

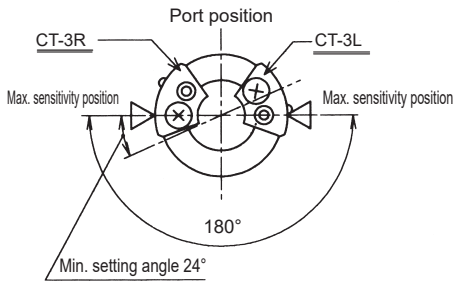

Combination B

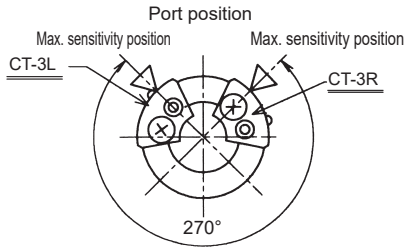

Switch unit assembly and switch adjustment method

● Mounting the switch unit body
Mount onto the rotary actuator body using the switch case mounting screws. Refer to table below for the tightening torque.

Model No.	Tightening torque (N·m)
For RV3$^{S}_{D}$A3	0.06 to 0.2
For RV3$^{S}_{D}$A10	0.1 to 0.2
For RV3$^{S}_{D}$A20	0.2 to 0.3
For RV3$^{S}_{D}$A30	

● Switch position adjustment
Loosen the switch adjust screw, set the switch's max. sensitivity position to the angle scale which corresponds to the rotary actuator's set angle, and then fix the switch. Tighten with a tightening torque of 40 to 50 N·cm. Since the angle scale is a guide, confirm that the LED turns ON when making the final adjustment.

● Switch replacement
Remove the switch adjusting screw and plate fixing screw, and then replace the switch. When fixing, clamp with a force of 40 to 50 N·cm. Assemble the switch following the removal steps in reverse, and always adjust the switch position.

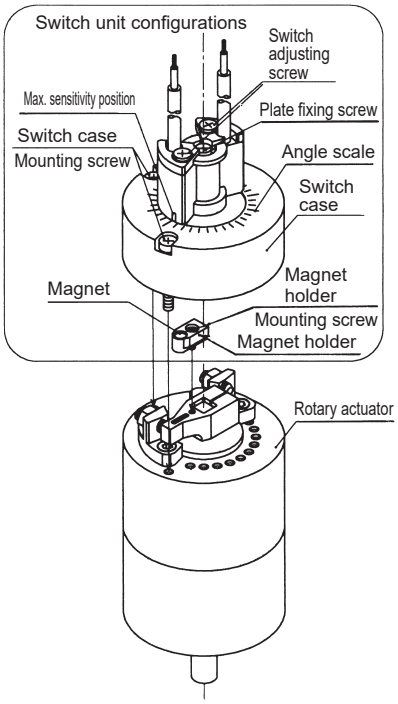

LCM
LCR
LCG
LCW
LCX
STM
STG
STS/STL
STR2
UCA2
ULK*
JSK/M2
JSG
JSC3/JSC4
USSD
UFCD
USC
UB
JSB3
LMB
LML
HCM
HCA
LBC
CAC4
UCAC2
CAC-N
UCAC-N
RCS2
RCC2
PCC
SHC
MCP
GLC
MFC
BBS
RRC
GRC
RV3*
NHS
HRL
LN
Hand
Chuk
MecHnd/Chuk
ShkAbs
FJ
FK
SpdContr
Ending

Large switch unit: Standard/with valve/low hydraulic

Specifications

Item	Proximity 2-wire	Proximity 3-wire	Reed 2-wire	
	M2V	M3V	M0V	M5V
Applications	Dedicated for programmable controller	For programmable controller,relay, IC circuit, compact solenoid valve	For programmable controller, relay	For programmable controller, relay, IC circuit (without indicator lamp), serial connection
Power supply voltage	——	4.5 to 28 VDC	——	
Load voltage/current	10 to 30 VDC, 5 to 30 mA	30 VDC or less, 100 mA or less	5 to 50 mA with 12/24 VDC, 7 to 20 mA with 110 VAC	50 mA or less with 5/12/24 VDC, 20 mA or less with 110 VAC
Current consumption	——	At 24 VDC 10 mA or less (when ON)	——	
Internal voltage drop	4 V or less	0.5 V or less	2.4 V or less	0 V
Indicator	LED (Lit when ON)			No indicator lamp
Leakage current	1 mA or less	10 μA or less	0 mA	
Lead wire length	1 m {Oil resistant vinyl cabtyre cable 2-conductor 0.2 mm²}	1 m {Oil resistant vinyl cabtyre cable 3-conductor 0.15 mm²}	1 m {Oil resistant vinyl cabtyre cable 2-conductor 0.2 mm²}	
Shock resistance	980 m/s²		294 m/s²	
Insulation resistance	100 MΩ and over with 500 VDC megger			
Withstand voltage	No failure after 1 minute of 1,000 VAC application.			
Ambient temperature	-10 to +60°C			
Degree of protection	IEC Standard IP67, JIS C0920 (water-tight), oil resistance			
Weight g	1 m:22 3 m:57 5 m:93			

* M0 switch can be used for 24 VAC and 48 VAC within load current range of 7 to 20 mA.

How to order

Switch unit

RVU50 - C - 90 - M2V - R

Ⓐ Model
Ⓑ Unit
Ⓒ Oscillating angle
Ⓓ Switch model No.
Ⓔ Switch quantity

Code	Description
Ⓐ Model	
RVU50	Applicable actuator: RV3S/D50
RVU150	Applicable actuator: RV3S/D150
RVU300	Applicable actuator: RV3S/D300
RVU800	Applicable actuator: RV3S/D800
Ⓑ Unit	
Blank	Standard products
C	With shock absorber
Ⓒ Oscillating angle	
90	90°
100	100°
180	180°
270	270°
280	280° ("C" (with shock absorber) cannot be selected.)

Ⓓ Switch model No.

L-shaped lead wire	Contact	Voltage AC	Voltage DC	Indicator	Lead wire
M2V*	Prox.		●	1-color LED	2-wire
M3V*	Prox.		●	1-color LED	3-wire
M0V*	Reed	●	●	1-color LED	2-wire
M5V*	Reed	●	●	No indicator lamp	2-wire

*** Lead wire length**	
Blank	1 m (standard)
3	3 m (option)
5	5 m (option)

Ⓔ Switch quantity	
R	With clockwise rotation detection 1 piece
L	With counterclockwise rotation detection 1 piece
D	2

⚠ Precautions for model No. selection

Note: When the type for shock absorber is selected, the shock absorber body must be purchased separately.

[Example of model No.]

RVU50-C-90-M2V-R

Model: Switch unit
Ⓐ Model : RV3S/D50
Ⓑ Unit : With shock absorber
Ⓒ Oscillating angle : 90°
Ⓓ Switch model No. : M2V switch, lead wire length 1 m
Ⓔ Switch quantity : With clockwise rotation detection 1 piece

Switch internal circuit diagram

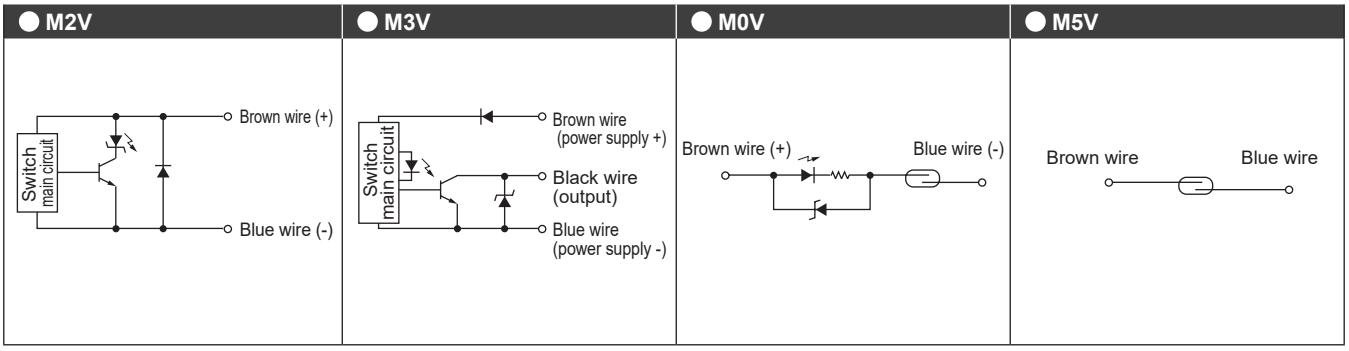

Operational range of switch

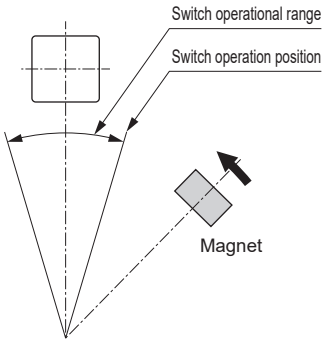

Item / Model No.	Operational range	
	M2V, M3V	M0V, M5V
RV3S50, RV3D50	Approx. 40°	Approx. 25°
RV3S150, RV3D150	Approx. 25°	Approx. 15°
RV3S300, RV3D300	Approx. 25°	Approx. 15°
RV3S800, RV3D800	Approx. 25°	Approx. 15°

Switch adjustment method

When installing the switch unit afterwards, if the clearance between the switch and magnet exceeds the range on the following drawing, adjust the clearance with a bending bracket.

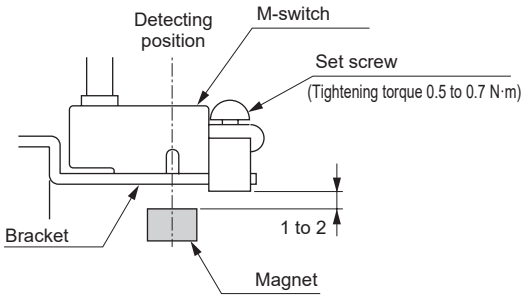

LCM
LCR
LCG
LCW
LCX
STM
STG
STS/STL
STR2
UCA2
ULK*
JSK/M2
JSG
JSC3/JSC4
USSD
UFCD
USC
UB
JSB3
LMB
LML
HCM
HCA
LBC
CAC4
UCAC2
CAC-N
UCAC-N
RCS2
RCC2
PCC
SHC
MCP
GLC
MFC
BBS
RRC
GRC
RV3*
NHS
HRL
LN
Hand
Chuk
MecHnd/Chuk
ShkAbs
FJ
FK
SpdContr
Ending

LCM
LCR
LCG
LCW
LCX
STM
STG
STS/STL
STR2
UCA2
ULK*
JSK/M2
JSG
JSC3/JSC4
USSD
UFCD
USC
UB
JSB3
LMB
LML
HCM
HCA
LBC
CAC4
UCAC2
CAC-N
UCAC-N
RCS2
RCC2
PCC
SHC
MCP
GLC
MFC
BBS
RRC
GRC
RV3*
NHS
HRL
LN
Hand
Chuk
MecHnd/Chuk
ShkAbs
FJ
FK
SpdContr
Ending

Switch unit configurations

● RVU 50/150/300

Switch unit (standard) Configurations

Lever with magnet
Lever
Boss
Magnet
Pan head machine screw
Nut

Base bracket
Base bracket
Binding machine screw

Mounting bracket for M-switch
M-switch mounting band
Mounting bracket
Cross-recessed pan head machine screw

Switch mounting bracket
LS bracket
Holder
Pan head machine screw
Spring washer

M-switch

Rotary actuator with switch

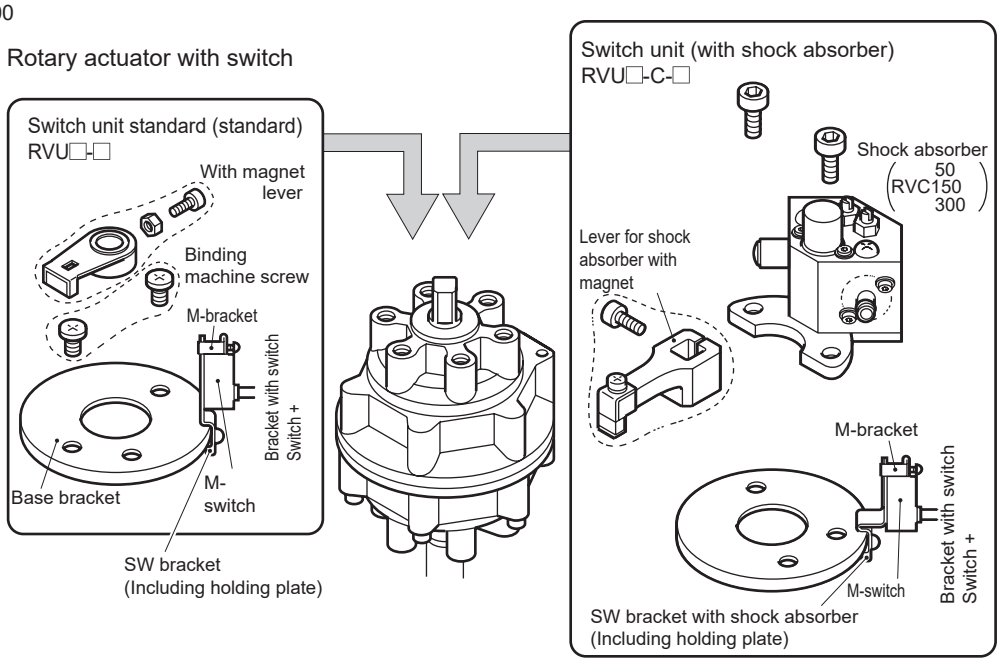

Switch unit (With shock absorber) Configurations

With magnet
Lever for shock absorber
Lever
Magnet
Magnet holder
Hexagon socket head cap screw
Pan head machine screw
Spring washer

Base bracket
Base bracket

Mounting bracket for M-switch
M-switch installation band
Mounting bracket
Cross-recessed pan head machine screw

With shock absorber
Switch mounting bracket
LS bracket
Holder
Pan head machine screw
Spring washer

M-switch

(Note) Shock absorber body is not included in switch unit. (Refer to page 1382 for model No. of shock absorber.)

● RVU800

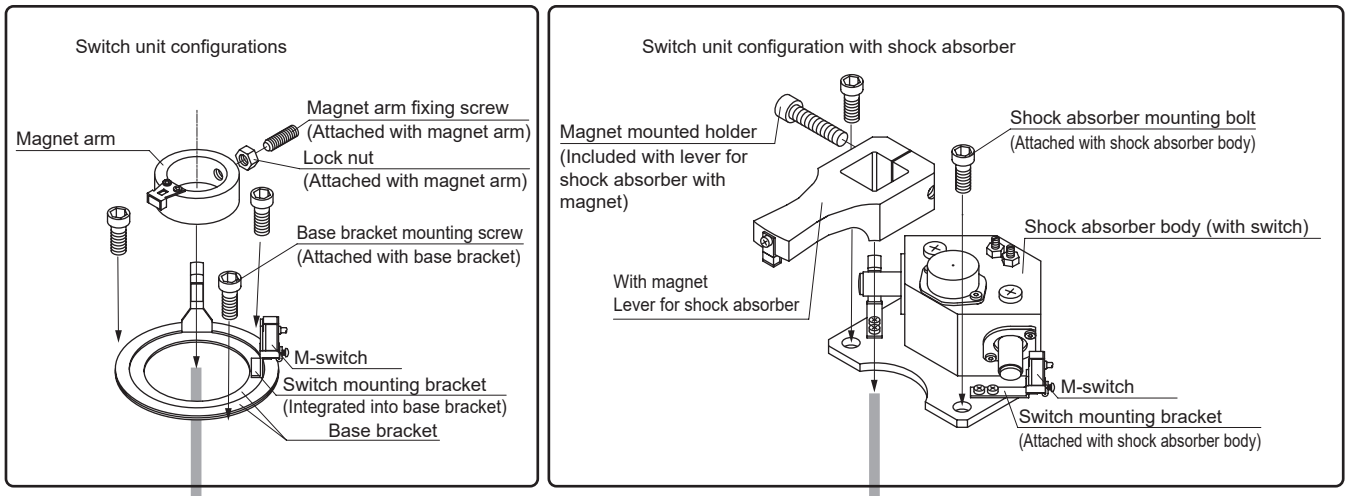

(Note) Shock absorber body is not included in switch unit. (Refer to page 1382 for model No. of shock absorber.)

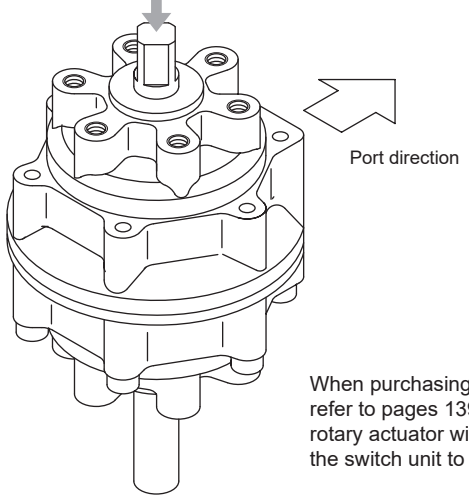

When purchasing switch other than standard switch unit, refer to pages 1395 and 1396 for repair parts kit. The rotary actuator with switch can be assembled by attaching the switch unit to the rotary actuator without switch.

Repair parts list

● Compact rotary actuator

No./part name / Model	No. / Product / Kit No.	3 Vane shaft	1 Shoe sealant	8 O-ring (2 pcs. each)
RV3S1	RV3S1-K	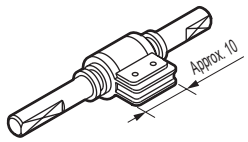		ø1xø3.8(WxID)
RV3S3	RV3S3-K	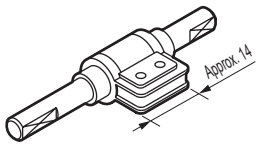		ø1.42xø6.8
RV3S10	RV3S10-K	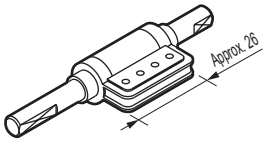		ø1.5xø8
RV3S20	RV3S20-K	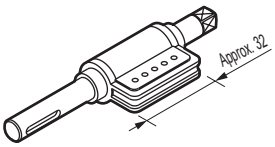		ø2xø10.5
RV3S30	RV3S30-K	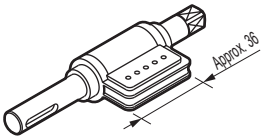		P-14
RV3D1	RV3D1-K	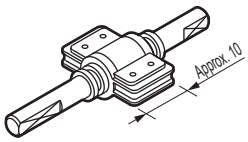		ø1xø3.8(WxID)
RV3D3	RV3D3-K	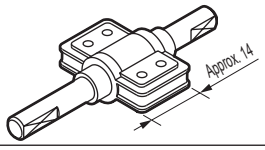		ø1.42xø6.8
RV3D10	RV3D10-K	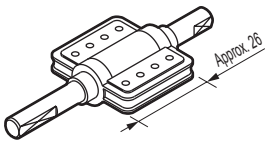		ø1.5xø8
RV3D20	RV3D20-K	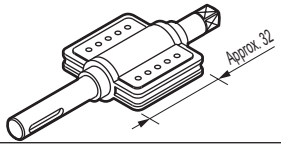		ø2xø10.5
RV3D30	RV3D30-K	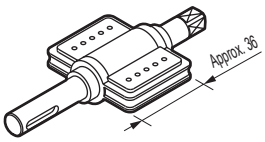		P-14

LCM
LCR
LCG
LCW
LCX
STM
STG
STS/STL
STR2
UCA2
ULK*
JSK/M2
JSG
JSC3/JSC4
USSD
UFCD
USC
UB
JSB3
LMB
LML
HCM
HCA
LBC
CAC4
UCAC2
CAC-N
UCAC-N
RCS2
RCC2
PCC
SHC
MCP
GLC
MFC
BBS
RRC
GRC
RV3*
NHS
HRL
LN
Hand
Chuk
MecHnd/Chuk
ShkAbs
FJ
FK
SpdContr
Ending

● Large rotary actuator

No./part name / Part No. / Product	Kit No.	4	6	8	10
Model		Vane shaft	Shoe sealant	O-ring (2 pcs. each)	O-ring
RV3S50	**RVS50-K**	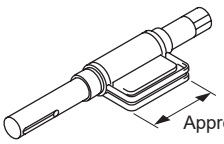 Approx. 46	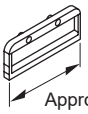 Approx. 46	P-16	ø1.8xø56.2
RV3S150	**RVS150-K**	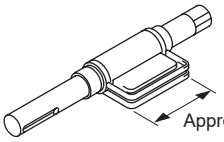 Approx. 60	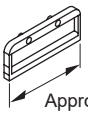 Approx. 60	P-22	ø1.9xø82
RV3S300	**RVS300-K**	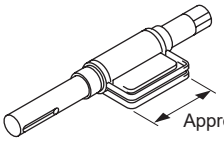 Approx. 71	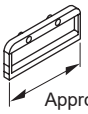 Approx. 71	P-31	ø3xø105
RV3S800	**RVS800-K**	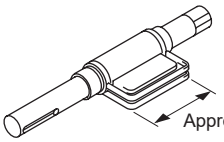 Approx. 107	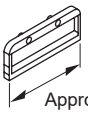 Approx. 107	P-48	ø3.1xø150
RV3D50	**RVD50-K**	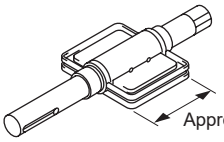 Approx. 46	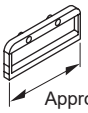 Approx. 46	P-16	ø1.8xø56.2
RV3D150	**RVD150-K**	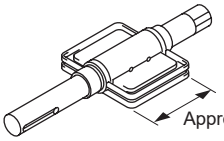 Approx. 60	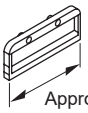 Approx. 60	P-22	ø1.9xø82
RV3D300	**RVD300-K**	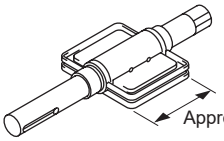 Approx. 71	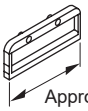 Approx. 71	P-31	ø3xø105
RV3D800	**RVD800-K**	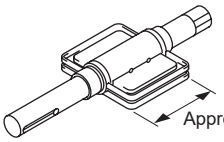 Approx. 107	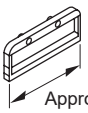 Approx. 107	P-48	ø3.1xø150

Repair parts kit

Part name	Kit No.	Appearance	Part name	Quantity
Lever with magnet	● **RVU50-A1** **RVU150-A1** **RVU300-A1** **RVU800-A1**	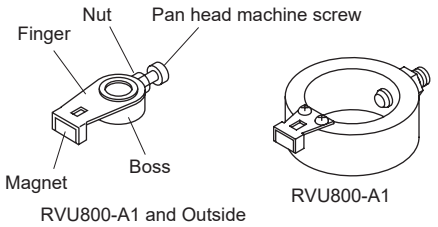	Lever Boss Magnet Pan head machine screw Nut	1 1 1 1 1
Base bracket	● **RVU50-A2** **RVU150-A2** **RVU300-A2** **RVU800-A2** *1 **RVU800-A2-D** *2 *1 with 1 switch *2 In the case of the second type with two switches, refer to page 1392 for configuration with switches.	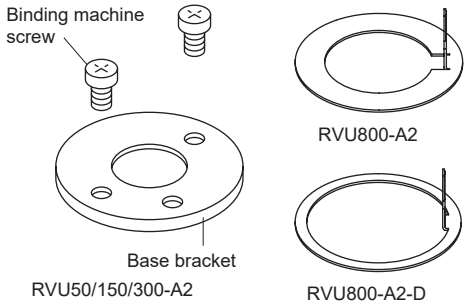	Base bracket Binding machine screw	1 2 *3 *3 3 pcs for RVU800-A2, without RVU800-A2-D
Switch mounting bracket	● **RVU50-A3** **RVU150-A3** **RVU300-A3**	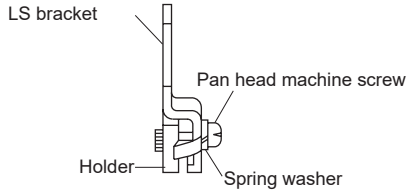	LS bracket Holder Pan head machine screw Spring washer	1 1 1 1
Switch mounting bracket for shock absorber installation	● **RVU50-A3-C** **RVU150-A3-C** **RVU300-A3-C**	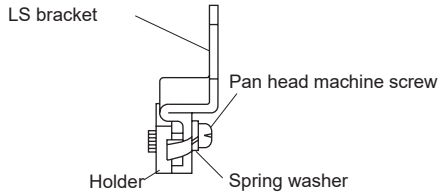	LS bracket Holder Pan head machine screw Spring washer	1 1 1 1
Lever for shock absorber with magnet (Dimensions Refer to page 1384 for the type without switch.)	● **RVU50-90-A1-C** **RVU150-90-A1-C** **RVU300-90-A1-C** **RVU800-90-A1-C**	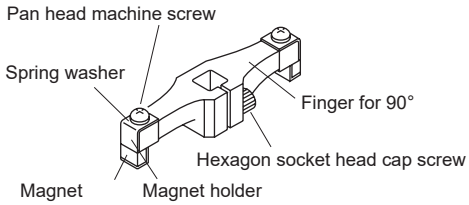	Lever Magnet Magnet holder Hexagon socket head cap screw Pan head machine screw Spring washer	1 2 2 1 2 2
	● **RVU50-100-A1-C** **RVU150-100-A1-C** **RVU300-100-A1-C** **RVU800-100-A1-C**	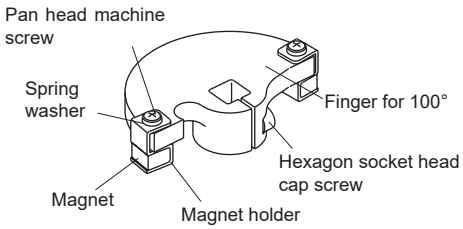		
	● **RVU50-180-A1-C** **RVU150-180-A1-C** **RVU300-180-A1-C** **RVU800-180-A1-C**	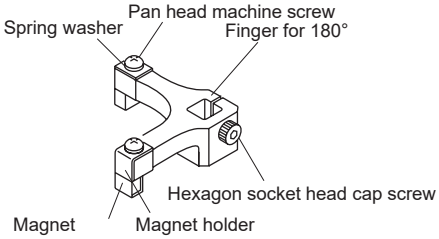		

LCM
LCR
LCG
LCW
LCX
STM
STG
STS/STL
STR2
UCA2
ULK*
JSK/M2
JSG
JSC3/JSC4
USSD
UFCD
USC
UB
JSB3
LMB
LML
HCM
HCA
LBC
CAC4
UCAC2
CAC-N
UCAC-N
RCS2
RCC2
PCC
SHC
MCP
GLC
MFC
BBS
RRC
GRC
RV3*
NHS
HRL
LN
Hand
Chuk
MecHnd/Chuk
ShkAbs
FJ
FK
SpdContr
Ending

Repair parts kit

Part name	Kit No.	Appearance	Part name	Quantity
Lever for shock absorber with magnet (The lever for the 280° shock absorber with magnet is not available.)	● RVU50-270-A1-C RVU150-270-A1-C RVU300-270-A1-C RVU800-270-A1-C (For information about types without switch and dimensions refer to page 1384.)	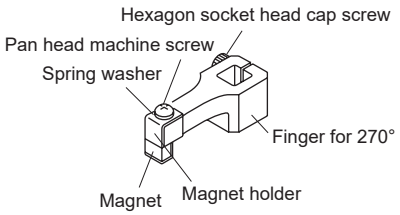	Lever Magnet Magnet holder Hexagon socket head cap screw Pan head machine screw Spring washer	1 1 1 1 1 1
M-bracket SW	● RVU-00-A1	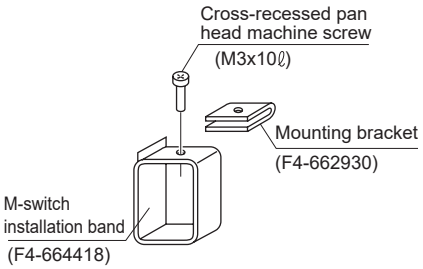	M-switch installation band Mounting bracket Cross-recessed pan head machine screw	1 1 1
Packing seal screw kit	● RVU10-B1 RVU20-B1 RVU30-B1 RVU50-B1 RVU150-B1 RVU300-B1	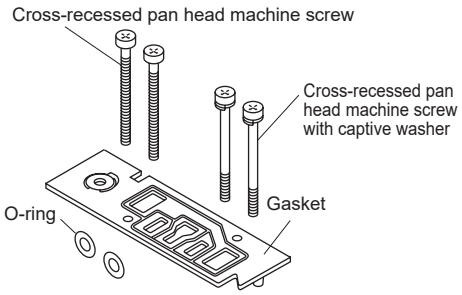	O-ring Gasket Cross-recessed pan head machine screw Cross-recessed pan head machine screw with captive washer	2 1 2 2
Valve kit	● RVU□ □- □-B2 10 20 30 50 150 300 1: 100 VAC 2: 200 VAC 3: 24 VDC V :Single solenoid W :Double solenoid	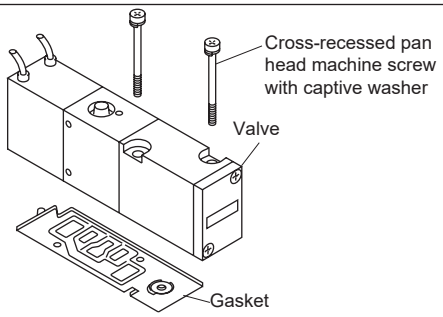	Valve Cross-recessed pan head machine screw with captive washer Gasket	1 2 1
Sub-base	● RV3U10-B3 RV3U20-B3 RV3U30-B3 RV3U50-B3 RV3U150-B3 RV3U300-B3	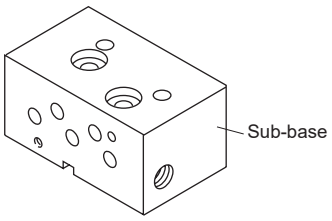	Sub-base	1
Angle variable switch	● RV3U-CT-□ 3R :For right mounting 3L :For left mounting 3RU :L-shaped lead wire For right mounting 3LU :L-shaped lead wire For left mounting	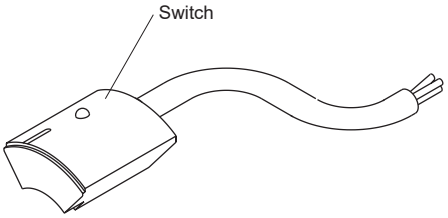	Switch	1

LCM
LCR
LCG
LCW
LCX
STM
STG
STS/STL
STR2
UCA2
ULK*
JSK/M2
JSG
JSC3/JSC4
USSD
UFCD
USC
UB
JSB3
LMB
LML
HCM
HCA
LBC
CAC4
UCAC2
CAC-N
UCAC-N
RCS2
RCC2
PCC
SHC
MCP
GLC
MFC
BBS
RRC
GRC
RV3*
NHS
HRL
LN
Hand
Chuk
MecHnd/Chuk
ShkAbs
FJ
FK
SpdContr
Ending

Rotary actuator selection method

Select based on the following procedures

Step 1 Size (torque) selection
(1) Static load
(2) Resistance load
(3) Inertia load

↓

Step 2 Oscillating time confirmation

↓

STEP 3 Allowable energy confirmation

STEP 1 Size (torque) selection

Selection method is roughly categorized into three load.
In each case, the required torque must be calculated. If the load is a compound load, add each torque to calculate the required torque. Refer to the output table (effective torque table) and select the required torque size according to the working pressure.

(1) Static load (T_S)
When static pushing force is required for clamp, etc.

$T_S = F_S \times L$

T_S: Required torque (N·m)
F_S: Required force (N)
L : Length from center of rotation to pressure cone apex (m)

(2) Resistance load (T_R)
When force including frictional force, gravity or other external force is applied

$T_R = K \times F_R \times L$

T_R : Required torque (N·m)
K : Slack coefficient
When load does not fluctuate K=2
When load fluctuates K=5
F_R : Required force (N)
L : Length from center of rotation to pressure cone apex (m)

(3) Inertia load (T_A)
When the object is rotated

$T_A = 5 \times I \times \dot{\omega}$
$\dot{\omega} = \theta / t^2$

T_A: Required torque (N·m)
I : Moment of inertia (kg·m^2)
$\dot{\omega}$: Angular acceleration (rad/s^2)
θ : Oscillating angle (rad)
t : Oscillating time (s)

Refer to the figure for moment of inertia calculation on page 1399 and calculate the moment of inertia.

Output table (effective torque)

Unit: N·m

Working pressure (MPa) / Model No.		0.2	0.3	0.4	0.5	0.6	0.7	0.8	0.9	1.0
Single vane	RV3S1	-	0.07	-0.10	0.12	0.15	0.18	-	-	-
	RV3S3	0.1	0.17	0.24	0.31	0.38	0.45	-	-	-
	RV3S10	0.35	0.56	0.75	0.98	1.2	1.39	-	-	-
	RV3S20	0.59	0.95	1.33	1.7	2.1	2.49	2.87	3.26	3.68
	RV3S30	1.1	1.8	2.5	3.19	4.1	4.8	5.8	6.5	7.2
	RV3S50	1.25	2.59	3.69	4.79	5.9	7	8.29	9.5	10.6
	RV3S150	5.5	8.5	11.5	15	18	21	24	27.3	30.5
	RV3S300	10.5	16.5	22.5	28.5	34.5	40.5	46	51.8	57.5
	RV3S800	37.8	59.1	81	102	123	144	166	186	205
Double vane	RV3D1	-	0.16	0.22	0.27	0.34	0.41	-	-	-
	RV3D3	0.25	0.39	0.54	0.71	0.86	1.01	-	-	-
	RV3D10	0.76	1.17	1.62	2.11	2.54	3.03	-	-	-
	RV3D20	1.4	2.22	3.06	3.88	4.17	5.53	6.38	7.17	8.07
	RV3D30	2.7	4.4	6	7.7	9.5	11.2	12.99	14.8	16.6
	RV3D50	3.3	5.79	8.29	10.4	12.8	15.1	17.6	20.1	22.5
	RV3D150	12.5	19	27	35	41.5	48	55	62	69
	RV3D300	25.5	39	54	68	83	97	110	124	137
	RV3D800	77.4	120	161	206	247	288	332	371	411

LCM
LCR
LCG
LCW
LCX
STM
STG
STS/STL
STR2
UCA2
ULK*
JSK/M2
JSG
JSC3/JSC4
USSD
UFCD
USC
UB
JSB3
LMB
LML
HCM
HCA
LBC
CAC4
UCAC2
CAC-N
UCAC-N
RCS2
RCC2
PCC
SHC
MCP
GLC
MFC
BBS
RRC
GRC
RV3*
NHS
HRL
LN
Hand
Chuk
MecHnd/Chuk
ShkAbs
FJ
FK
SpdContr
Ending

STEP 2 Oscillating time confirmation

If the oscillating time is set outside of the specified range, the actuator's operation may become unstable, or the actuator could be damaged. Always set the oscillating time within the specified oscillating time adjusting range.

Compact rotary actuator (s)

Model No.	Oscillating angle		
	90°	180°	270°
RV3 S/D 1	0.03 to 0.6	0.06 to 1.2	0.09 to 1.8
RV3 S/D 3	0.04 to 0.8	0.08 to 1.6	0.12 to 2.4
RV3 S/D 10	0.045 to 0.9	0.09 to 1.8	0.135 to 2.7
RV3 S/D 20	0.05 to 1.0	0.10 to 2	0.15 to 3
RV3 S/D 30	0.07 to 0.7	0.14 to 1.4	0.21 to 2.1

Large rotary actuator (s)

Model No.	Oscillating angle				
	90°	100°	180°	270°	280°
RV3 S/D 50	0.08 to 0.8	0.09 to 0.9	0.16 to 1.6	0.24 to 2.4	0.25 to 2.5
RV3 S/D 150	0.12 to 1.2	0.13 to 1.3	0.24 to 2.4	0.36 to 3.6	0.37 to 3.7
RV3 S/D 300	0.16 to 1.6	0.17 to 1.7	0.32 to 3.2	0.48 to 4.8	0.49 to 4.9
RV3*800	0.22 to 2.2	0.24 to 2.4	0.44 to 4.4	0.66 to 6.6	0.68 to 6.8

* Refer to page 1357 for the oscillating time of the angle variable.

STEP 3 Allowable energy confirmation

When using an inertial load, if the load's kinetic energy exceeds the allowable value at the oscillating end, the actuator could be damaged. Calculate the energy with the following formula and set it so it is within the allowable value.
If the energy is too large, absorb the energy with a shock absorber, etc.

$E = (1/2) \times I \times \omega_0^2 \times 10^3$
$\omega_0 \approx 1.2 \times \omega$
$\omega = \theta / t$

E : Kinetic energy (mJ)
I : Moment of inertia (kg·m²)
ω_0 : Colliding angular speed (rad/s)
ω : Average angular speed (rad/s)
θ : Oscillating angle (rad)
t : Oscillating time (s)

Calculation of resistance torque	Horizontal load	Vertical load
Required	With resistance load 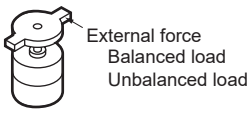	With resistance load 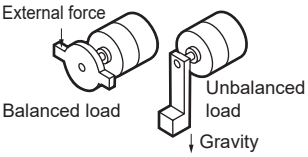
Not required	Without resistance load 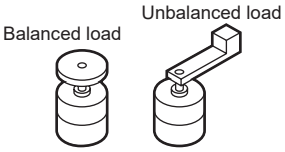	Without resistance load

Refer to the figure for moment of inertia calculation on page 1399 and calculate the moment of inertia.

Selection method for shock absorber for rotary

STEP 1 Allowable energy confirmation

↓

STEP 2 Shock absorber performance confirmation

STEP 1 Allowable energy confirmation

Find the load's kinetic energy. If the value exceeds the rotary actuator with the vane mechanism's tolerable energy, install a shock absorber that complies with the rotary actuator.
Refer to STEP 3 of Rotary actuator selection method.

STEP 2 Shock absorber performance confirmation

If the load's collision energy exceeds the allowable value at the oscillating end, the shock absorber could be damaged.
Calculate the energy with the following formula and set it so it is within the allowable value.
If the energy is too large, consider using a separate shock absorber with large absorption performance.

$E = E_1 + E_2$
$E_1 = (1/2) \times I \times \omega_0^2$
$\omega_0 \approx 1.2 \times \omega$
$\omega = \theta / t$
$E_2 = (1/2) \times T \times \theta'$
$E_m = E \times n$

E : Colliding energy (J)
E_1 : Kinetic energy (J)
E_2 : Thrust energy (J)
ω_0 : Colliding angular speed (rad/s)
ω : Average angular speed (rad/s)
I : Moment of inertia (kg·m²)
θ : Oscillating angle (rad)
θ' : Absorbing angle of shock absorber (rad)
t : Oscillating time (s)
T : Torque of rotary actuator (N·m)
E_m : Energy per minute (J/min)
n : Operating frequency (time/min)

Calculating moment of inertia

Shape	Sketch	Requirements	Moment of inertia I kg·m²	Radius of rotation K_1^2	Remarks
Dial plate	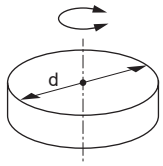	● Diameter d(m) ● Weight M(kg)	$I=\frac{Md^2}{8}$	$\frac{d^2}{8}$	● No mounting direction ● For sliding use, contact CKD.
Circular stepped plate	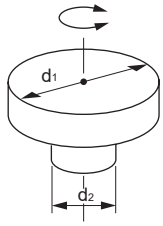	● Diameter d_1(m) d_2(m) ● Weight d_1 section M_1(kg) d_2 section M_2(kg)	$I=\frac{1}{8}(M_1d_1^2+M_2d_2^2)$	$\frac{d_1^2+d_2^2}{8}$	● Ignore when the d_2 section is extremely small compared to the d_1 section
Bar (center of rotation at end)	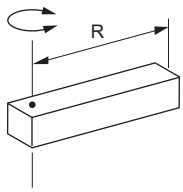	● Bar length R(m) ● Weight M(kg)	$I=\frac{MR^2}{3}$	$\frac{R^2}{3}$	● Mounting direction is horizontal ● Oscillating time changes when the mounting direction is vertical
Bar (center of rotation at CG)	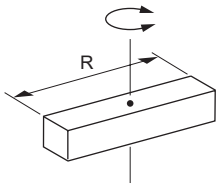	● Bar length R(m) ● Weight M(kg)	$I=\frac{MR^2}{12}$	$\frac{R^2}{12}$	● No mounting direction
Rectangular parallelepiped	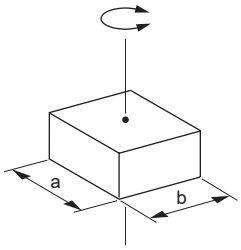	● Side length a(m) b(m) ● Weight M(kg)	$I=\frac{M}{12}(a^2+b^2)$	$\frac{a^2+b^2}{12}$	● No mounting direction ● For sliding use, contact CKD.
Concentrated load	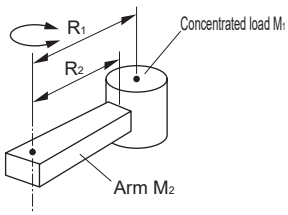	● Shape of concentrated load ● Length to center of gravity of concentrated load R_1 ● Arm length R_2(m) ● Concentrated load weight M_1(kg) ● Arm weight M_2(kg)	$I=M_1(R_1^2+K_1^2)+\frac{M_2R_2^2}{3}$	Calculate K_1^2 according to shape of concentrated load	● Mounting direction is horizontal ● When M_2 is extremely small compared to M_1, it may be calculated as $M_2 = 0$

How to convert load J_L to rotary actuator shaft rotation when using with gear

Gear	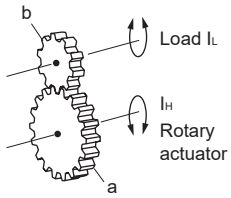	● Gear - Rotary actuator side (tooth number) a Load side (tooth number) b ● Load inertia moment N·m	Load moment of inertia for the rotary actuator's shaft rotation $I_H=\left(\frac{a}{b}\right)^2 I_L$		● When gear shape is larger, gear moment of inertia should be considered.

LCM
LCR
LCG
LCW
LCX
STM
STG
STS/STL
STR2
UCA2
ULK*
JSK/M2
JSG
JSC3/JSC4
USSD
UFCD
USC
UB
JSB3
LMB
LML
HCM
HCA
LBC
CAC4
UCAC2
CAC-N
UCAC-N
RCS2
RCC2
PCC
SHC
MCP
GLC
MFC
BBS
RRC
GRC
RV3*
NHS
HRL
LN
Hand
Chuk
MecHnd/Chuk
ShkAbs
FJ
FK
SpdContr
Ending

Selection example 1 Clamp

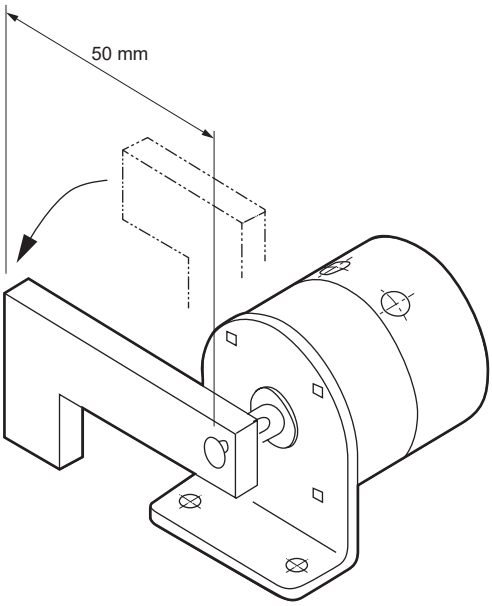

[Operation conditions]

Pressure	0.5 MPa
Oscillating angle	90°
Oscillating time	0.3 s
Clamp lever weight	0.1 kg
Clamping force	20 N
Clamp position	50 mm

STEP 1 Size (torque) selection

Calculate the torque required for the static torque.

F_S = clamping force: 20 N
R = clamp position: 0.050 m

T_S = 20 x 0.05 = 1.0 N·m

RV3S20-90 temporarily selected from required torque

STEP 2 Oscillating time confirmation

Make sure that the oscillating time in the working conditions is within the specified value.

If the operation time is 0.3 seconds for 90°,
it is OK since the RV3S20-90 oscillating time
adjusting range is 0.05 to 1.0.
Proceed to the next step.

STEP 3 Allowable energy confirmation

Calculate the kinetic energy, and confirm that it is within the allowable energy value.

Calculate the moment of inertia I for the clamp lever.
[Bar (center of rotation at end)]
$I = M \times R^2/3 = 0.1 \times 0.05^2/3$
$= 0.0000833\ kg \cdot m^2$
Calculate colliding angular speed ω_0.
$\theta = 90° = \pi/2 (rad)$
$t = 0.3\ s$
$\omega = \theta/t = (\pi/2)/0.3 = 5.236 (rad/s)$
$\omega_0 = 1.2 \times \omega = 6.283\ (rad/s)$

Therefore, kinetic energy (E) is

$E = (1/2) \times 8.33 \times 10^{-5} \times 6.283^2 \times 10^3$
$= 1.64\ (mJ)$

The allowable energy is satisfied, so the RV3S20-90 can be selected.

LCM
LCR
LCG
LCW
LCX
STM
STG
STS/STL
STR2
UCA2
ULK*
JSK/M2
JSG
JSC3/JSC4
USSD
UFCD
USC
UB
JSB3
LMB
LML
HCM
HCA
LBC
CAC4
UCAC2
CAC-N
UCAC-N
RCS2
RCC2
PCC
SHC
MCP
GLC
MFC
BBS
RRC
GRC
RV3*
NHS
HRL
LN
Hand
Chuk
MecHnd/Chuk
ShkAbs
FJ
FK
SpdContr
Ending

Selection example 2 When there is a disc-shaped load at end of bar

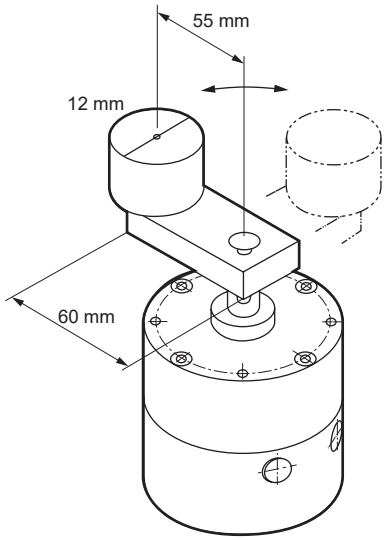

[Operation conditions]

Pressure	0.5 MPa
Oscillating angle	90°
Oscillating time	0.2 s
Bar length	60 mm
Bar weight	0.1 kg
Distance to dial plate	55 mm
Diameter of dial plate	12 mm
Dial plate weight	0.12 kg

STEP 1 Size (torque) selection

Since this is an inertial load, calculate the moment of inertia.

$$I=M_1(R_1^2+K_1^2)+M_2R_2^2/3$$
$$=0.12x(0.055^2+(0.012^2/8))+0.1x0.06^2/3$$
$$=4.85x10^{-4}$$

Then calculate the angular speed $\dot{\omega}$.
From conditions
θ =90°=π/2(rad)
t =0.2 s
$\dot{\omega}$ $=\theta/t^2=(\pi/2)/0.2^2$
$=39.27$ (rad/s^2)
Thus, the inertial torque (T_A) is,
T_A $=5x4.85x10^{-4}x39.27$
= 0.095 (N·m)

RV3S3-90 temporarily selected from inertial torque

STEP 2 Oscillating time confirmation

Make sure that the oscillating time in the working conditions is within the specified value.

If the operation time is 0.2 seconds for 90°,
it is OK since the RV3S3-90 oscillating time
adjusting range is 0.04 to 0.8.
Proceed to the next step.

STEP 3 Allowable energy confirmation

Calculate the kinetic energy, and confirm that it is within the allowable energy value.

Calculate colliding angular speed ω_0 according to the conditions.
θ =90°=π/2(rad)
t =0.2 s
ω $=\theta/t=(\pi/2)/0.2$
$=7.854$ (rad/s)
ω_0 = 1.2 x ω = 1.2 x 7.854 = 9.425 (rad/s)

Therefore, kinetic energy (E) is

E $=(1/2)x4.85x10^{-4}x9.425^2x10^3$
$=21.54$ (mJ)

The allowable energy is exceeded, so select the RV3S50 or install an external shock absorber.

LCM
LCR
LCG
LCW
LCX
STM
STG
STS/STL
STR2
UCA2
ULK*
JSK/M2
JSG
JSC3/JSC4
USSD
UFCD
USC
UB
JSB3
LMB
LML
HCM
HCA
LBC
CAC4
UCAC2
CAC-N
UCAC-N
RCS2
RCC2
PCC
SHC
MCP
GLC
MFC
BBS
RRC
GRC
RV3*
NHS
HRL
LN
Hand
Chuk
MecHnd/Chuk
ShkAbs
FJ
FK
SpdContr
Ending

Selection example 3 When plate-shaped load is applied with rotary shaft horizontal

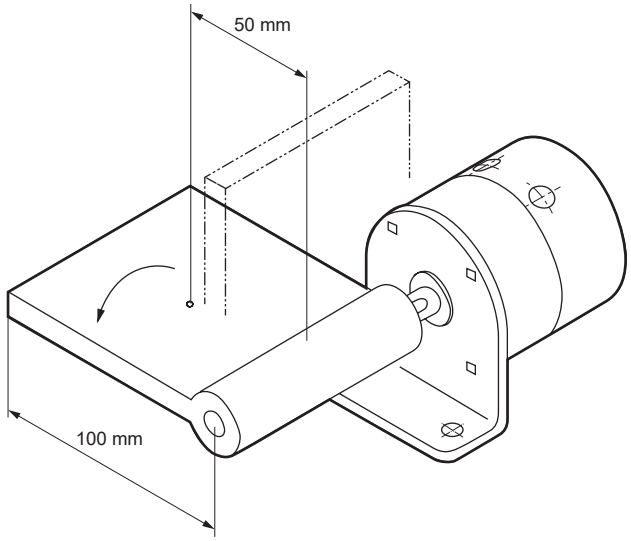

[Operation conditions]

Pressure	0.5 MPa
Oscillating angle	90°
Oscillating time	0.15 s
Plate length	100 mm
Plate weight	1.5 kg
Distance to center of gravity	50 mm
Operating frequency	5 cycle/min.

STEP 1 Size (torque) selection

This is a gravitational resistance load and inertial load, so calculate the resistance torque (TR) and inertial torque (TA).

[Resistance torque]
Since the resistance torque varies according to the rotation, calculate the max. value.
F_R = gravity = 1.5 x 9.8 = 14.7 N
R = distance to the center of gravity: 0.050 mm

T_R = 5 x 14.7 x 0.05 = 3.675 N·m ...(1)

[Inertial torque]
Bar (center of rotation at end)
I = 1.5 x 0.1^2 / 3 = 0.005 (kg·m^2)
From conditions
θ =90°=π/2(rad)
t =0.15 s
$\dot{\omega}$ =θ/t^2=(π/2)/0.15s^2
=69.8 (rad/s2)
Thus, the inertial torque (T_A) is,
T_A =5x0.005x109.1
= 1.745 (N·m) .....(2)
When the resistance torque and inertial torque are added,
T = T_R + T_A = 3.675 + 1.745 = 5.420 (N·m)

RV3S150-90 temporarily selected from required torque

STEP 2 Oscillating time confirmation

Make sure that the oscillating time in the working conditions is within the specified value.

If the operation time is 0.15 seconds for 90°,
it is OK since the RV3S150-90 oscillating time adjusting range is 0.12 to 1.2.
Proceed to the next step.

STEP 3 Allowable energy confirmation

Calculate the kinetic energy, and confirm that it is within the allowable energy value.
Calculate colliding angular speed according to the conditions.
θ =90°=π/2(rad)
t =0.15s
ω =θ/t=(π/2)/0.15
=10.47 (rad/s)
ω_0 = 1.2 x ω = 1.2 x 10.47 = 12.57 (rad/s)
Therefore, kinetic energy (E) is
E =(1/2)x0.005x12.57^{2}x10^3
=395 (mJ)
Since the allowable energy is exceeded, consider a shock absorber

Shock absorber review

Shock absorber STEP 1 Allowable energy confirmation

Since the rotary actuator's allowable energy is exceeded, confirm the shock absorber's capability in the next step.

Shock absorber STEP 2 Confirmation of shock absorber performance

Colliding angular speed
ω_0 =12.6 (rad/S)
Kinetic energy
E1 =(1/2)x0.005x12.6^2=0.395(J)
Torque at 0.5 MPa of RV3S150: 14.7 (N·m)
Absorbing angle of shock absorber: 0.2 (rad)
Thrust energy
E2 =(1/2)x14.7x0.2=1.47(J)
Thus, the collision energy (E) is
E = E1 + E2 = 0.395 + 1.47 ≈ 1.86 (J)

Energy per minute (Em)
Em =1.86x5=9.32(J)

Since all the shock absorber's specification values are satisfied, the RV3S150 with shock absorber can be selected.

LCM
LCR
LCG
LCW
LCX
STM
STG
STS/STL
STR2
UCA2
ULK*
JSK/M2
JSG
JSC3/JSC4
USSD
UFCD
USC
UB
JSB3
LMB
LML
HCM
HCA
LBC
CAC4
UCAC2
CAC-N
UCAC-N
RCS2
RCC2
PCC
SHC
MCP
GLC
MFC
BBS
RRC
GRC
RV3*
NHS
HRL
LN
Hand
Chuk
MecHnd/Chuk
ShkAbs
FJ
FK
SpdContr
Ending

Applications

● Boring device (pitch feeding by one way clutch)

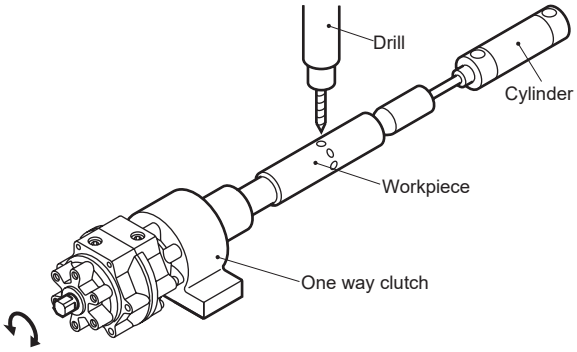

● Pipe bender

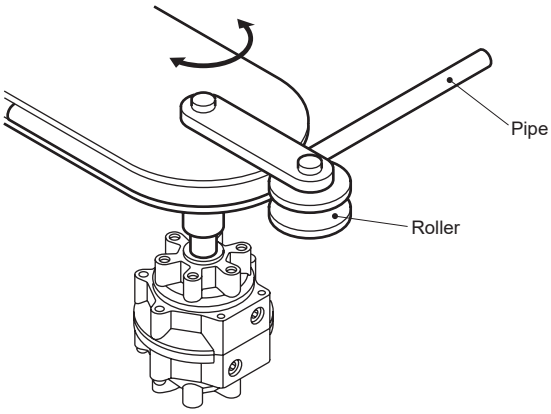

● Table reciprocating device

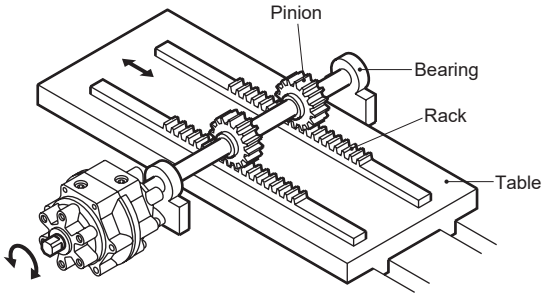

● Clamp device

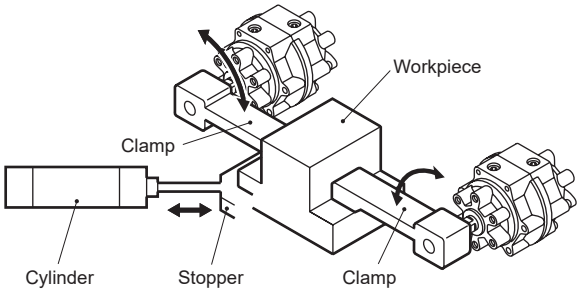

● Stamp device

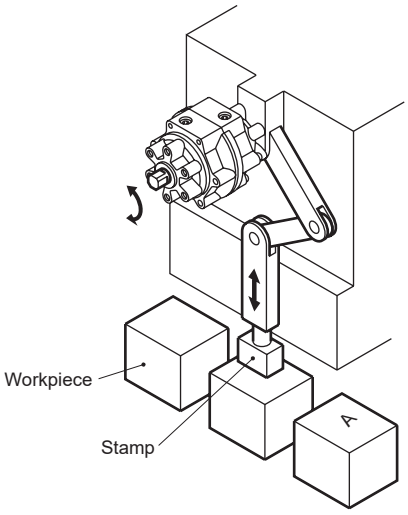

● Stopper of parts feeder

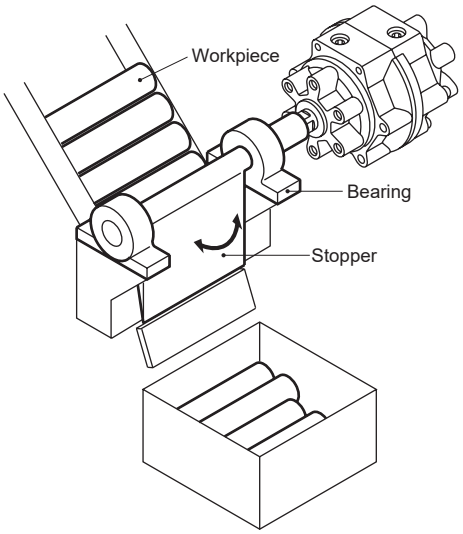

Applications

● Part feeder

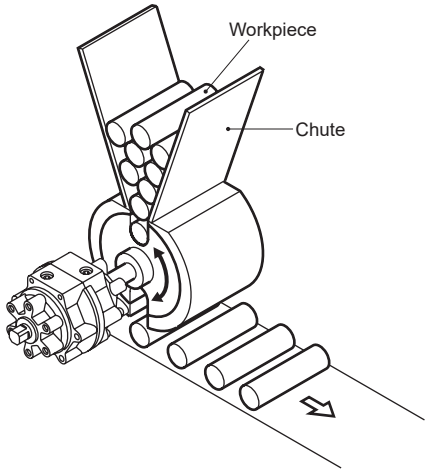

● Part feeder

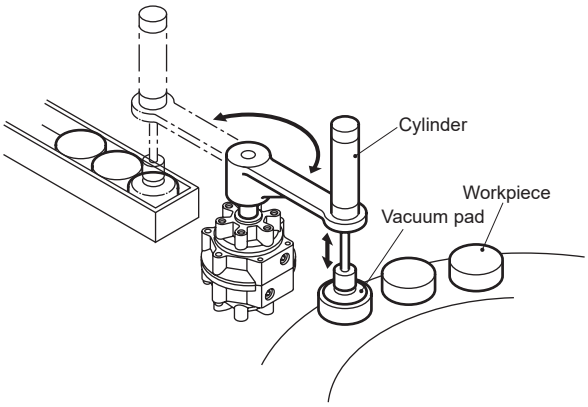

● Reverse rotation (90°) device

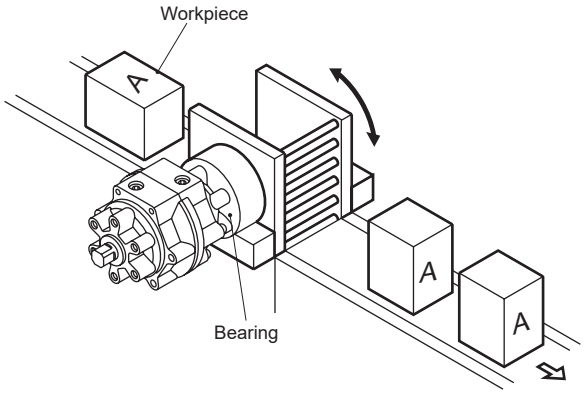

● Ball valve open/close

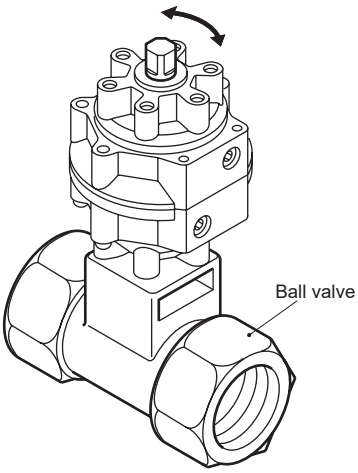

● Washing device for holed parts

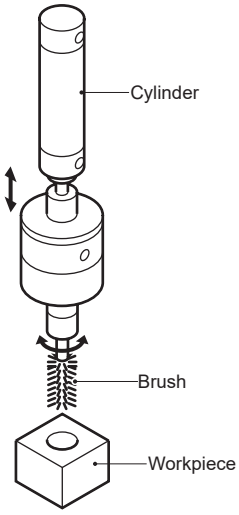

● Cover open/close mechanism

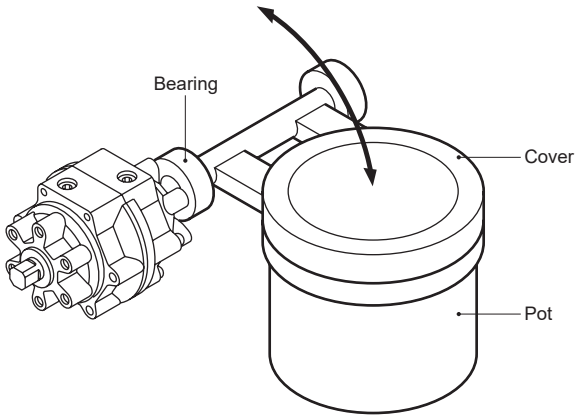

Pneumatic components

Safety Precautions

Be sure to read this section before use.
Refer to Intro Page 73 for general information of the cylinder, and to Intro Page 80 for general information of the cylinder switch.

Product-specific cautions: Rotary actuator vane RV3* Series

Design/selection

1. Common

WARNING

■ Do not brake or hold the product by trapping it with pneumatic pressure.
If no stopping device is provided outside the product and braking is applied partway in the stroke by sealing air in with directional control valves, the stopped position may not be maintained because of air leakage, possibly resulting in injury to the operator or damage to devices or equipment.

■ Consider load fluctuation, rising/lowering operation and changes in frictional resistance for safe design.
Rotary actuator operation speed may increase, causing bodily injury or damage to workpiece/device/equipment.

■ Do not use the rotary actuator as a shock absorbing structure.
If abnormal pressure is applied or if air leaks, the deceleration effect will be lost, and physical or property damage may result.

■ Be sure to tighten very securely in order to prevent the fixed parts or connected sections from loosening.
Always use a secure tightening method when the operating frequency is high or when using the high rotor at places with high levels of vibration.

■ Rotary actuator modification
Do not modify the rotary actuator.

CAUTION

■ Do not apply torque exceeding rated output externally to the product.
If force exceeding rated output is applied, the product could be damaged.

■ If repeatability is required for the oscillating angle, provide an external stopper to directly stop the load.
Stopping using the stopper equipped with the rotary actuator may cause the initial oscillation angle settings to change.

■ Always use the rotary actuator within the specified oscillation time range.
Use in low-speed areas less than this range will prevent smooth movement because of the stick-slip phenomenon.

■ Install a speed controller in order to control the oscillation speed of the rotary actuator.
Adjust the speed gradually from the low speed to the required speed.

■ Precautions for rotary actuator switch
Take care when using multiple rotary actuators in proximity.
When using two or more rotary actuators with switches in proximity or if a magnetic body moves very close to the rotary actuator, the magnetic interference could cause the switch to malfunction. Rotary actuators should be designed at intervals of 40 mm or more. (Follow the allowable interval shown on each rotary actuator.)

In the mid-oscillation angle position, pay attention to the ON time of the switch.
When the switch is set at the middle position of the oscillating angle and the load is driven when the magnet is passed, if the oscillating speed is too fast, the operation time will be short when the switch turns ON and the load may not finish the required movement.
In this case,

$$V = \frac{\text{Operational range of switch (degrees)}}{\text{Load operation time (ms)}} \times 1000 \text{ (degree/s)}$$

is the oscillation speed.

Mounting, installation and adjustment

1. Common

⚠WARNING

■ When adjusting the angle by supplying pressure, do not rotate the device too much in advance.
When adjusting while supplying pressure, the device could rotate and drop during adjustment, depending on how it is oriented, possibly resulting in operator, component, or device injury or damage.

■ Confirm that the device operates correctly before starting.
After installing the devices, connect the compressed air and power. Carry out appropriate functional inspections and leakage inspections to confirm that the devices are correctly installed and operating safety before starting the system.

■ When coating
If the resin sections are painted, the resin could be adversely affected by the paint or solvent. Contact CKD to confirm whether painting is possible.
Moreover, do not remove, peel off or paint over the nameplate attached to the rotary actuator.

■ When adjusting the rotary actuator's oscillating angle with the pressure supplied, take measures to prevent the rotary actuator from rotating more than necessary.
Rotating more than is required may cause a dangerous situation.

■ When using an axial fitting, select a free-moving axial fitting.
If a stationary axial fitting is selected, the eccentricity could cause the fitting to twist and lead to defective operation, product damage, physical harm or property damage.

■ Secure sufficient space for maintenance and inspection.

■ An axial load (thrust load) on the vane shaft may cause faulty operation to occur. Therefore, do not apply such loads. If this is unavoidable, use a structure with a thrust bearing as shown in Fig.1.

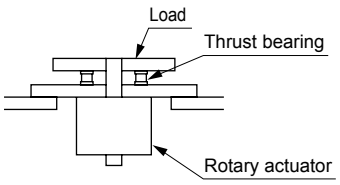

Fig. 1

■ Avoid bending the end of the rotary actuator shaft or a malfunction may occur.
When unavoidable, use a mechanism transmitting only rotation as shown in Fig. 2.
When connecting the vane shaft end and load at any position in the oscillating range, use flexible couplings, etc., that will not twist off to prevent the vane shaft from breaking and bearings from wearing or seizing, etc.

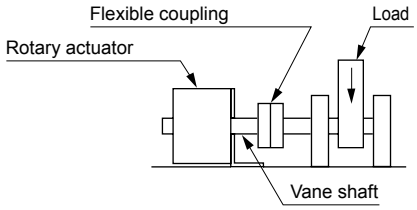

Fig. 2 Radial load

■ Install the external stopper in a position far from the rotary shaft.
If the stopper is installed near the rotary shaft, torque generated by the product could be applied to the rotary shaft. This reaction on the stopper may damage the rotary shaft or bearings, possibly resulting in injury to the operator or damage to equipment or devices.

⚠CAUTION

■ When installing a load or jig, etc., on the rotary actuator vane shaft, check that load is not applied to the body as shown in Fig. 3.

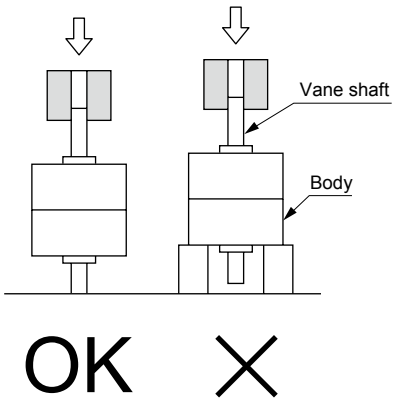

Fig. 3

■ Do not wipe items showing the model number, such as the nameplate, with organic solvents.
This may erase the display.

■ Do not put feet directly onto shaft or devices mounted onto shaft.
Climbing directly onto the shaft could damage the bearings, etc.

■ If the load weight is large and oscillation is fast, the resulting shocks due to the inertial energy may exceed those that can be absorbed, possibly damaging the rotary actuator.
Install a shock absorber to absorb inertia.

LCM
LCR
LCG
LCW
LCX
STM
STG
STS/STL
STR2
UCA2
ULK*
JSK/M2
JSG
JSC3/JSC4
USSD
UFCD
USC
UB
JSB3
LMB
LML
HCM
HCA
LBC
CAC4
UCAC2
CAC-N
UCAC-N
RCS2
RCC2
PCC
SHC
MCP
GLC
MFC
BBS
RRC
GRC
RV3*
NHS
HRL
LN
Hand
Chuk
MecHnd/Chuk
ShkAbs
FJ
FK
SpdContr
Ending

Mounting, installation and adjustment

2. Oscillating angle variable RV3$^{S}_{D}$A

⚠ WARNING

■ Do not loosen the angle adjustment screws outside of the adjusting range for variable oscillation angle rotary actuators.

Loosening beyond the adjusting range may cause the angle adjustment screw to fall out, potentially causing bodily injury or damage to the workpiece/device/equipment.

⚠ CAUTION

■ Stopper

- Operate the rotary actuator only after installing a stopper to serve both as a reference point stopper and angle setting device.
- When the stopper is set to the oscillating origin or max. oscillating angle, if set to the positive side beyond the adjusting range, the vane could hit the internal stopper and cause damage. Always adjust the angle so that the finger stops at the external stopper.
- The reference point stopper is fixed in position and cannot be moved.

■ Structure of the variable oscillating angle mechanism

An external stopper is installed to the tap hole provided on the rotary actuator's body. There is a reference point stopper and angle setting stopper. The reference stopper is fixed at a set point (oscillating origin), and the angle setting stopper is fixed at a position where the required setting angle can be attained. The rotating actuator stops at the set angle when the finger attached to the shaft contacts the stopper. The position can be finely adjusted with the adjust screw provided on the stopper.

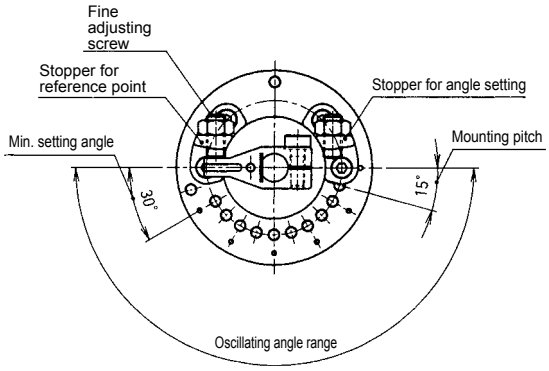

■ Oscillating angle settings

For non-specified setting angles (standard)

The reference point stopper is fixed and the angle setting stopper is attached at shipment. Accordingly, the angle setting stopper must be installed at a position to achieve the desired angle for use.

The installation pitch is 15°. Refer to the oscillating angle setting methods for details on installation.

If the angle setting is specified (made to order)

The reference point and angle setting stoppers are installed at the designated angle at shipment.

Before starting use, each stopper must be finely adjusted to the accurate angle by turning the fine adjust screw.

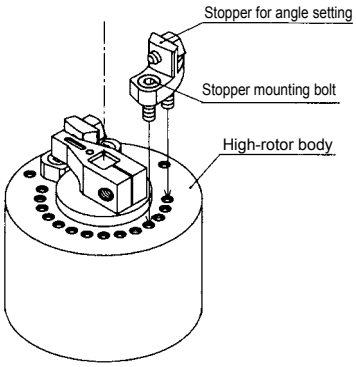

■ Oscillating angle setting method

If the setting angle is an integer multiple of the stopper's installation pitch (15°)

(1) Install the stopper in the appropriate position to set the angle by mounting to the relevant tapped hole. When installing the stopper, use the 30° pitch angle setting mark provided near the tap hole as a guide.

Setting angle

Model No.	Setting angle (installation pitch in multiples of 15°)
RV3$^{S}_{D}$A3	30°, 45°, 60°, 75°, 90°, 105°, 120°, 135°, 150°, 165°, 180°
RV3$^{S}_{D}$A10	
RV3$^{S}_{D}$A20	
RV3$^{S}_{D}$A30	30°, 45°, 60°, 75°, 90°, 105°, 120°, 135°, 150°, 165°, 180°, 195°, 210°, 225°, 240°, 255°, 270°

Example for the 90° case

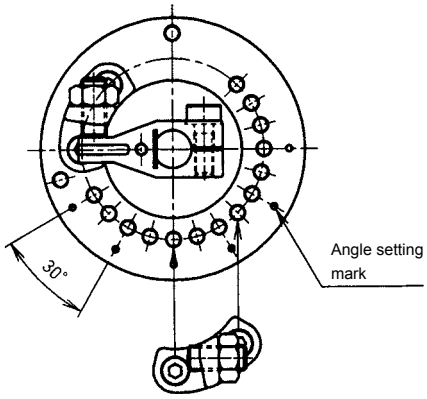

(2) Next, turn and finely adjust the fine adjust screws on the reference point stopper and angle setting stopper to set the correct angle. Always tighten the lock nut after setting.

Adjustable angle width

Stopper fine adjustment range for reference point	±3° *1
Stopper fine adjustment range for angle setting	-9° to +6°
Stopper fine adjustment range for angle setting at max. setting angle	-9° to +3° *2

*1 : RV3DA3 is -1° to +3°
*2 : RV3DA3 is -9° to +1°

If the setting angle is between integer multiples of the stopper's installation pitch (15°)

(1) If the setting angle is between integer multiples of the stopper's installation pitch (15°), install and fix the stopper at the tap hole shown with the arrow below.

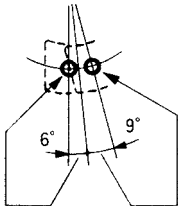

Mount so that the reference position is the front 6° range of the stopper mounting pitch (15°) for the front mounting screw, and the back 9° range for the back mounting screw.

(2) Next, turn and finely adjust the fine adjust screw on the stopper and set the correct angle. Always tighten the lock nut after setting.

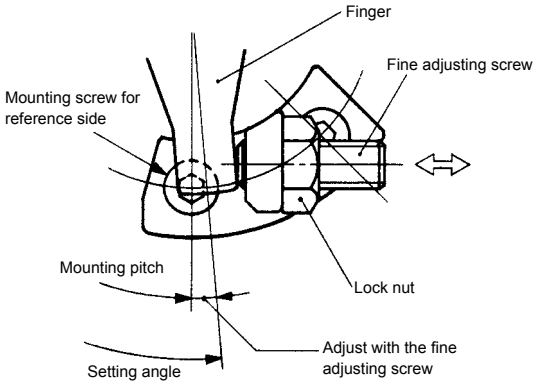

3. Shock absorber RVC

⚠ WARNING

■ Precautions for shock absorber handling

- Do not loosen or disassemble any parts other than the adjustment needle. Doing so may lead to oil leakage.
- The hex nut at the base of the adjustment needle is not a locking nut, so do not turn it. Otherwise, oil leakage may result.
- Do not use the product where the product is exposed to dust or cuttings or may come in contact with liquids such as water, oil, etc. This may lead to reduced durability or failure.

⚠ CAUTION

■ Mounting the shock absorber Mounting figure

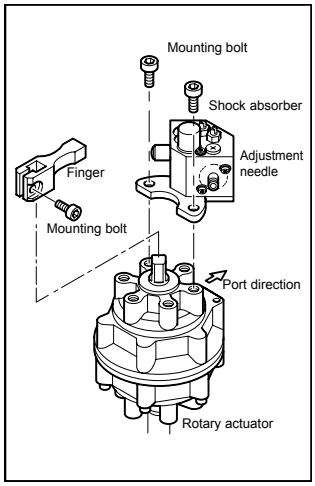

1. Use the mounting holes on the body to mount the shock absorber and install onto the square shaft of the rotary actuator.
2. Install so that the shock absorber is above the rotary actuator port. Check that the shock absorber has been mounted securely.
3. The finger of the shock absorber can now be installed, but check that the rotary actuator shaft is positioned at the oscillating origin. (Refer to the oscillating origin position)
4. When at the oscillating origin, the shock absorber fingers contact the shock absorber piston and will not engage. Turn the square shaft counterclockwise to where the fingers engage.
5. The shock absorber cannot be used as a stopper.

LCM
LCR
LCG
LCW
LCX
STM
STG
STS/STL
STR2
UCA2
ULK*
JSK/M2
JSG
JSC3/JSC4
USSD
UFCD
USC
UB
JSB3
LMB
LML
HCM
HCA
LBC
CAC4
UCAC2
CAC-N
UCAC-N
RCS2
RCC2
PCC
SHC
MCP
GLC
MFC
BBS
RRC
GRC
RV3*
NHS
HRL
LN
Hand
Chuk
MecHnd/Chuk
ShkAbs
FJ
FK
SpdContr
Ending

Use/maintenance

1. Common

⚠ CAUTION

■ This rotary actuator is a no-lubrication actuator.
The actuator can be lubricated, but once it has been oiled, it must be maintained in an lubricated state. There are times that the lubricant applied in advance may be washed off due to oiling, stopping partway may result in malfunction.
Use Class 1 turbine oil (non-additive) ISO VG32 for lubrication.
Never use other oils (spindle oil, machine oil, etc.). They could damage the seal section.
Recommended lubricants are indicated in the table below. Use this as a reference.

Manufacturer	Name
IDEMITSU KOSAN CO., LTD.	DIANA FRESIA S-32
FUJIKOSAN CO., LTD.	Fukkol Turbine 32
MITSUBISHI OIL CO., LTD.	Mitsubishi Turbine Oil 32
SHOWA SHELL SEKIYU CO., LTD.	SHELL VITREA 32
MITSUI & CO., LTD.	Mitsui Turbine Oil 32
JAPAN ENERGY CO., LTD.	Turbine 32
JAPAN OIL. CO., LTD.	Turbine Oil 32
Cosmo Oil Co., Ltd.	Cosmo Turbine 32
EXXON MOBIL CO., LTD.	STANOL 43N
KYGNUS SEKIYU K. K.	Turbine Oil 32

2. Oscillating angle variable RV3 S/D A

■ The stopping angle is set by touching the fine adjusting screw of each stopper with the finger.
Stopping angle accuracy does not include wear due to operation. If the stopping angle changes due to wear, recalibrate using the fine adjusting screws.

Modular unit

	Page
New handling system **NHS** Series	1413
Hybrid robot **HR** Series	1451
⚠ Safety precautions	1460

NHS

New handling system

Modular unit

Overview

New handling system with small part transfer kit saves design time with flexible modular configuration.

Features

Just like model kits!

The ideal system for the intended small parts conveying can be constructed simply and quickly according to the application, with flexible combinations as if making models for fun.

High rigidity/high precision

Driving section of X-axis module maintains high rigidity and high precision even under lateral and moment load, since LM guide is assembled in the guide section with CKD rodless cylinder SRL3 type. Shock absorber provided as standard at the stroke end absorbs impact and vibration when stopping.

Compact and easy to assemble

Integrated air ports for piping enable easy assembly even in narrow spaces. Furthermore, installation space is reduced by half compared to general cylinders, since a rodless cylinder is used.

Reduced design and assembling processes

The time required for model selection, design man-hours, assembly man-hours and control man-hours can be reduced, since X-axis, Z-axis, and attachment can be selected according to the applications.

Long service life, maintenance-free

LM guide SHS type with ball retainer is installed to improve maintenance for NSR-30 and 50 type.
Lubrication is not required for the long term, and the factory environment has been improved due to the low noise levels of the guide itself.

CONTENTS

Product introduction	1414
Applications	1419
Series variation	1420
● NSR (X-axis module)	1422
● NHS-H (Z-axis module HRL)	1430
● NHS-S (Z-axis module STL-B)	1440
Q&A	1446
Technical data	1448
NHS Series common accessory dimensions	1450
⚠ Safety precautions	1460

New Handling System

Potential.

- New handling system
  - X-axis module — NSR-1-10, 15, 30, 50
  - Z-axis module
    - STL-16, 25, 32, 50
    - HRL-05, 10, 15, 15H, 25, 50
  - X-, Z-axis mounting attachments

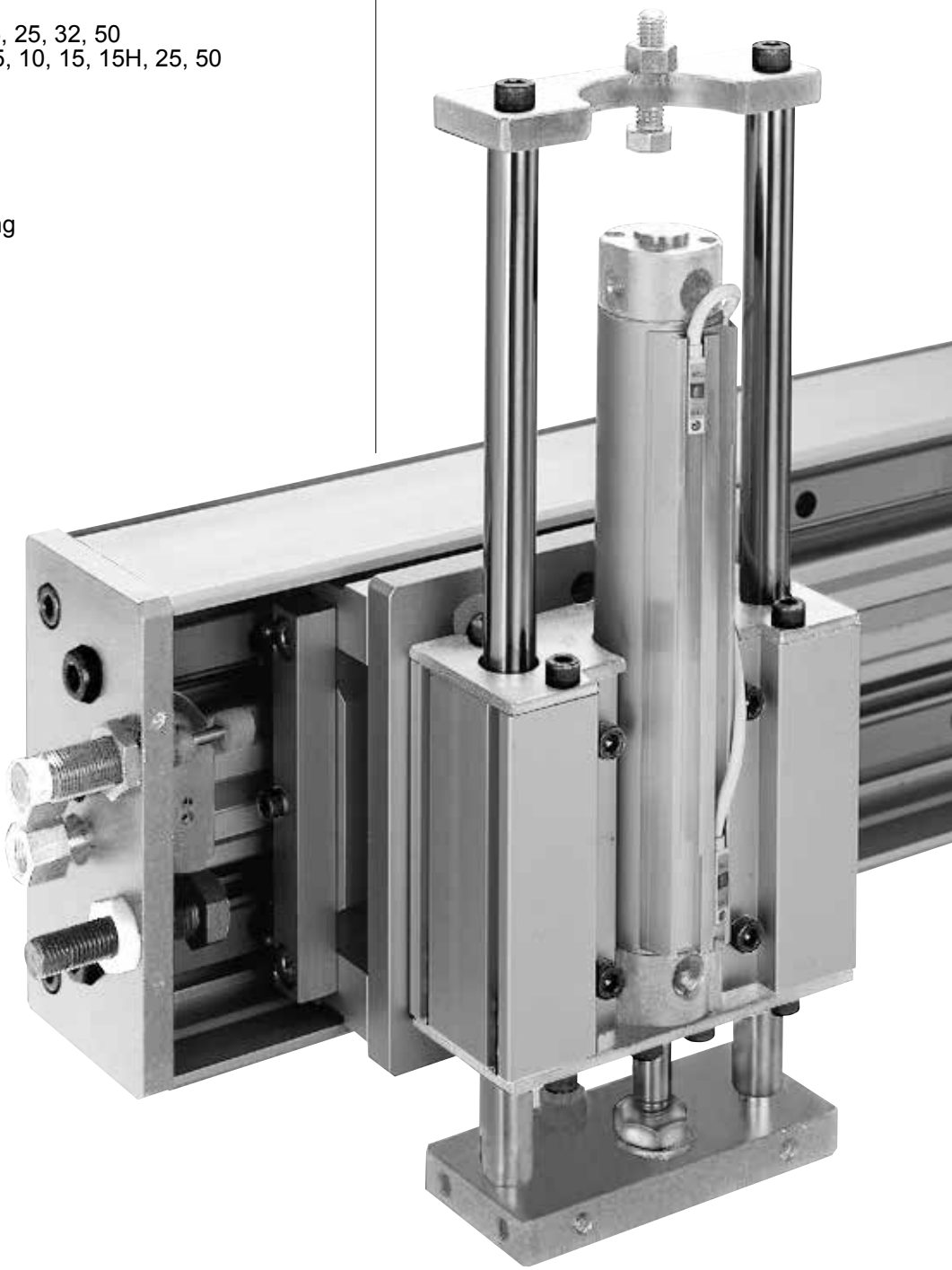

● NHS-H

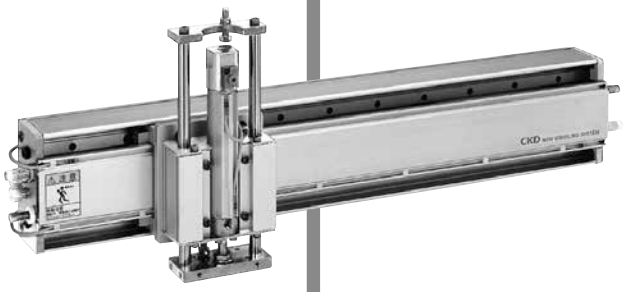

● NSR

● High rigidity LM guide
Equipped with two guide rails to achieve high accuracy and rigidity at the maximum allowable moment load

● Air driven with a rodless cylinder
Equipped with a no-lubrication rodless cylinder realizing high speeds.

● With shock absorber
Absorber for smooth stop at the stroke end

● Integrally molded high rigidity aluminum frame

● Stop bolt for fine adjustments

● Stroke end position detection switch
Cylinder switch for reliable and accurate operation

● T slot for frame main body assembly
Built-in square nut allows it to be mounted at any position along the length of the frame

● Front cover
Decorative plate prevents dust and acts as a sensor rail

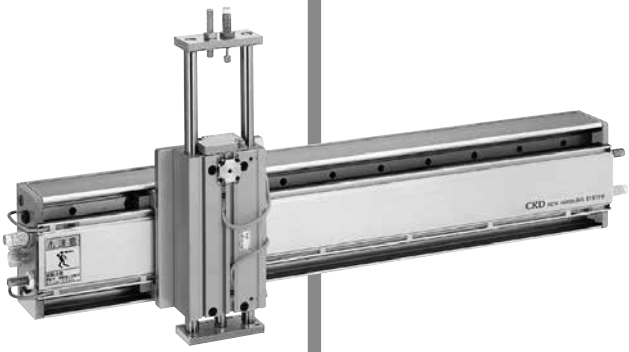

● NHS-S

Module **concept.**

X MODULE

The X-axis module can boast of being the most important component in the transfer unit structure. In other words, the performance of the X-axis module determines whether the transfer unit will satisfy customer requirements for their application. NSR type X-axis modules are made with emphasis on that very point. First, the drive part uses a SRL3 type rodless cylinder that has been well reviewed by many customers, proving its reliability, for a design that is space-saving and has high load capacity and high accuracy characteristics. Furthermore, the high-rigidity LM guide used withstands moment and lateral loads, and the max. guide span has been incorporated to optimize its characteristics. The body is finished with extruded aluminum to reduce weight and

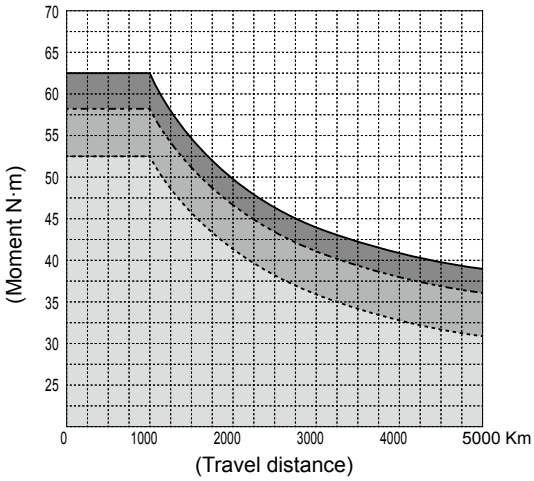

This is the NSR-1-10 / NSR-1-15 graph.

Slider speed : 500 mm/s
Unit stroke : 500 mm

——— M1
- - - - M3
- - - - M2

add rigidity. Standard parts include a shock absorber to absorb shock and vibration at the stroke end, a stop bolt to secure the stopping position, and a cylinder switch to detect the stroke end. NSR type X-axis modules narrow down the required functionality as much as possible, creating a more practical X-axis module with excellent cost performance. Options, including a cableveyor and full stroke length adjustment block, are widely available in response to user needs.

Z MODULE

STL

The Z-axis module, responsible for transport work as close to the target object as possible, cannot be too inflexible, nor too pliant, but requires an appropriate amount of rigidity. In addition, it should be as thin as possible out of consideration for overhang and space, while the demand for functionality of this component and the position-locking mechanism is ever increasing.

HRL

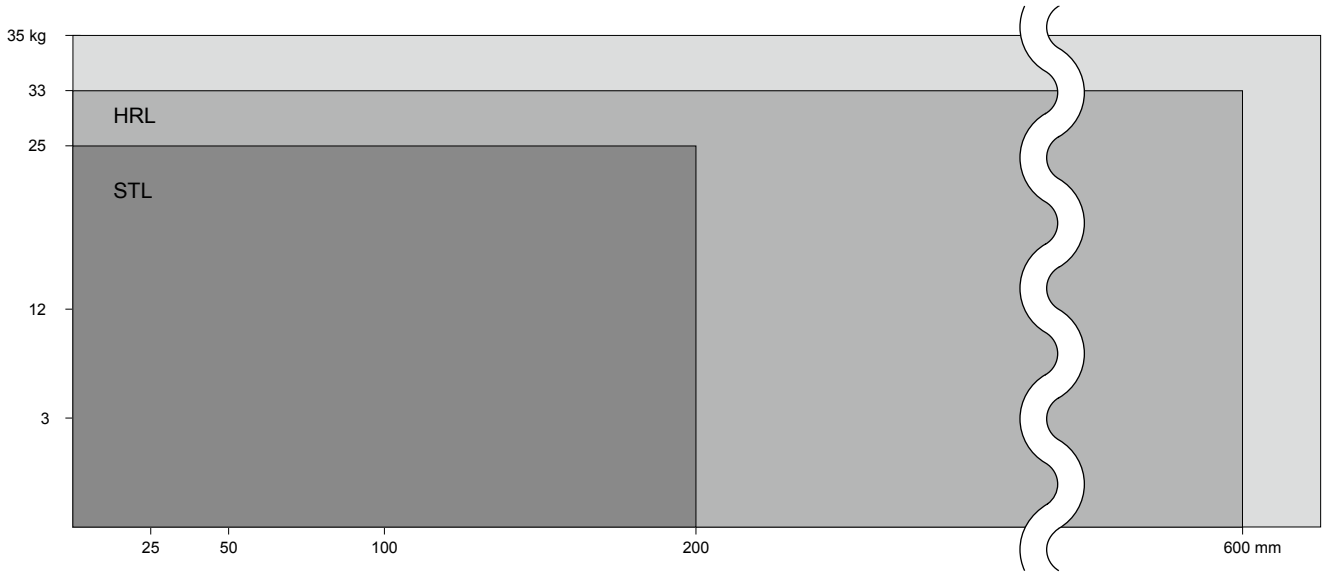

The CKD Z-axis modules respond to these needs, and are available in 10 models and 2 types, including the low-cost STL and the high-load long-stroke compatible HRL.
This lineup of transfer Z-axis modules with a load capacity of 3 to 33 kg enables the user to freely select a small part transfer system that meets individual applications and needs.
Naturally, CKD has a range of attachments available which allow combination of the X-axis module and Z-axis module to easily create a component transport system.

● Adjustable stroke block

A block that allows the full stroke length to be adjusted. Shock absorber and stop bolts are already mounted.

● Cableveyor

- Two mounts are available: horizontally mounted and vertically mounted.
- Two capacities are available: standard capacity and large capacity. (NSR-10, 15)

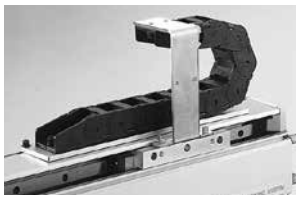

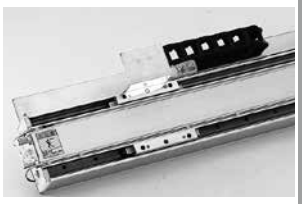

● 2-head

2-stage, high moment are available with two heads.

OPTION

■ Wide options/lineup to meet diverse needs

● Position locking

Z-axis modules with position locking mechanism are available.
(Excluding STL-BP-16)

● Speed controller

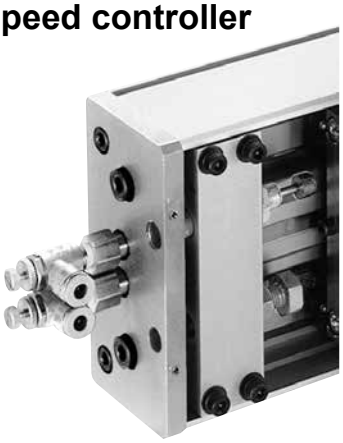

● LB bracket

The LB bracket makes mounting easier, especially when mounting on the bottom surface.
(LB brackets cannot be used for hoisting or suspending upside-down.)

(Refer to mounting orientation on page 1460)

Applications

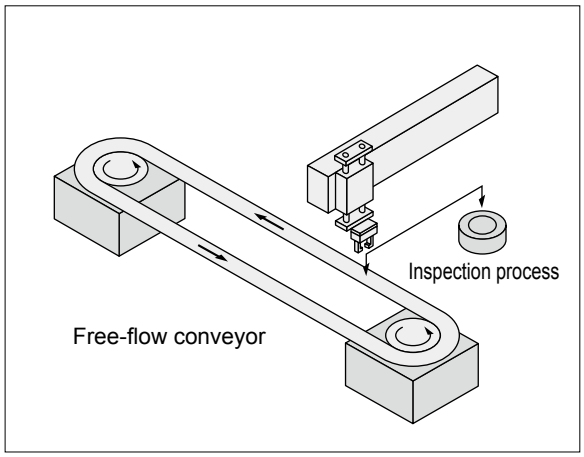

● Picks up small valves from the free-flow conveyor, inspects them, then returns them to the conveyor.

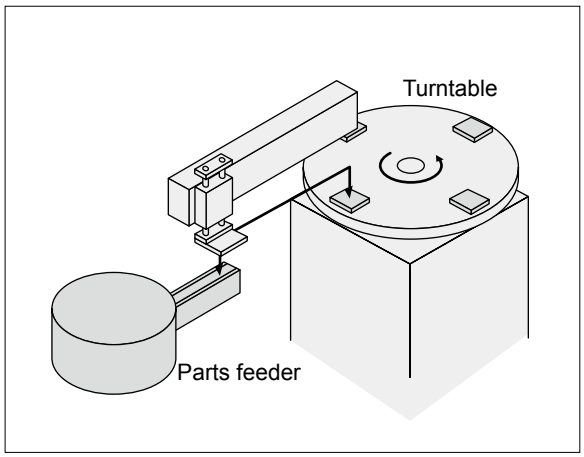

● Two electrical components sorted by the parts feeder are simultaneously vacuum-suctioned and transported to the jig on the turntable for assembly.

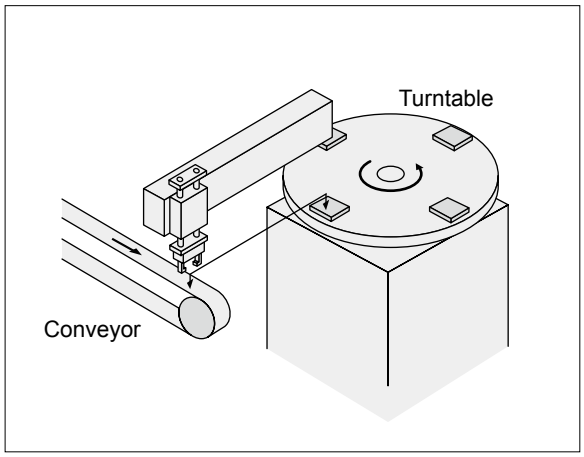

● Vehicle components fed down the conveyor are transported to the jig on the turntable.

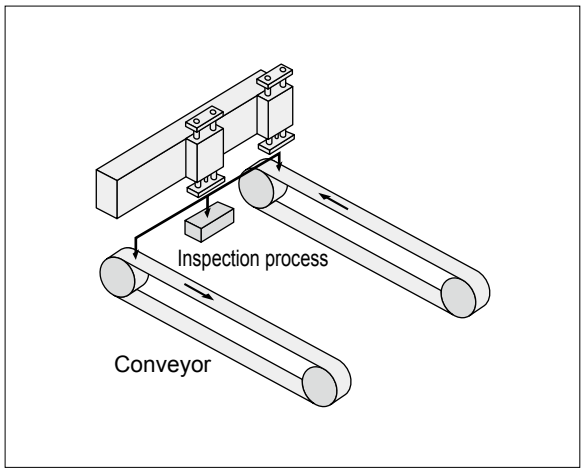

● There is an inspection process on the conveyor, so with two heads two vehicle components can be transported simultaneously.

New handling system NHS Series

Variation	Load capacity (kg)															
	X-axis				Z-axis									X-axis		
	10	15	30	50	3	4	5	6	7	10	12	20	33	10	15	
NSR (X-axis module)	●	●	●	●										50 to 2000	50 to 2000	
NHS-H (H: Z-axis module HRL)	●	●	●	●			●		●	●	●	●	●	50 to 2000	50 to 2000	
NHS-S (S: Z-axis module STL-B)	●	●	●	●	●				●		●		●	50 to 2000	50 to 2000	

●: Standard, ▒: Not available

Stroke length (mm)															X-axis max. stroke length	Z-axis cylinder	Page
	X-axis		Z-axis														
	30	50	30	40	50	75	100	125	150	175	200	250	300	301 to 600	(mm)		
	50 to 2000	50 to 2000													2000	-	1422
	50 to 2000	50 to 2000			●	●	●	●	●		●	●	●	●	2000	HRL	1430
	50 to 2000	50 to 2000			●	●	●	●	●	●	●				2000	STL-B	1440

New handling system X-axis module

NSR Series

- Stroke: 50 to 2000 mm
- Load capacity: 10, 15, 30, 50kg

RoHS CAD

Specifications

Item		NSR-10	NSR-15	NSR-30	NSR-50
Bore size	mm	ø20		ø32	ø40
Slider speed	mm/s	100 to 1000			
Shock absorber		NCK-00-1.2-C	NCK-00-2.6-C	FCK-M-3-C	FCK-M-5-C
Stroke	mm	50 to 2000 (1 mm pitch)			
Max. stroke	mm	2000			
Allowable moment	N·m	M1=36.4,M2=30.6,M3=34.2		M1,M3=85.9 M2=82.9	M1,M3=156.2 M2=150.7
Tilt of slider		±0.1° or less			
Piping port size		Rc1/8		Rc1/4	Rc1/2
Position detection sensor		T type proximity switch lead wire 3 m			
Max. horizontal load capacity	kg	10	15	30	50
Speed controller (option)		SC3W-6-6		SC3W-8-8	SC3W-15-10
Working fluid		Clean compressed air			
Working pressure	MPa	0.2 (≈29 psi, 2 bar) to 0.7 (≈100 psi, 7 bar)			
Proof pressure	MPa	1.05 (≈150 psi, 10.5 bar)			
Ambient temperature	°C	5 (41°F) to 60 (140°F)			
Lubrication		Refer to page 1460 for lubrication.			
Repeatability	mm	±0.02			
Weight	kg	(stx0.0109)+5.5	(stx0.0109)+5.6	(stx0.0176)+10.7	(stx0.0311)+17.9

Stroke adjustment specifications

Item	Blank	R	L	D
Adjustable stroke right mm	-15 to 0	Full stroke	-15 to 0	Full stroke
Adjustable stroke left mm	-15 to 0	-15 to 0	Full stroke	Full stroke

Shock absorber specifications

Item	NCK-00-1.2-C	NCK-00-2.6-C	FCK-M-3-C	FCK-M-5-C
Max. absorbing capacity J	12	26	30	50
Absorbing stroke mm	10	15	16	25
Max. colliding speed mm/s	2000			
Max. operating frequency cycle/min	30	25	20	12

Cableveyor specifications

Item	Cableveyor model No.	Bore size (mm)	Load capacity (kg/m)
For NSR-10, 15-B, F	TKP35H22-30W25R37	22x25	MAX1.6
For NSR-10, 15-X	TKP35H22-30W50R37	22x50	MAX1.6
For NSR-10, 15-W	TKP45H25-30W38R50	25x38	MAX3.0
For NSR-30-B, F	TKP45H25-30W58R50	25x58	MAX3.0
For NSR-50-B, F	TKP45H25-30W78R50	25x78	MAX3.0

Adjustable stroke block additional weight list

Model No.	Additional weight (kg)
NSR-1-10-R	0.685
NSR-1-10-L	0.685
NSR-1-10-D	1.370
NSR-1-15-R	0.810
NSR-1-15-L	0.810
NSR-1-15-D	1.620
NSR-1-30-R	1.140
NSR-1-30-L	1.140
NSR-1-30-D	2.280
NSR-1-50-R	1.750
NSR-1-50-L	1.750
NSR-1-50-D	3.499

Mounting bracket LB additional weight list

Model No.	Additional weight (kg)
NSR-10	0.8
NSR-15	0.8
NSR-30	2.9
NSR-50	4.8

Cableveyor additional weight list

Model No.	Additional weight (kg)
NSR-1-10,15-B	(st ÷ 2 x 0.0011) +0.482
NSR-1-10,15-W	(st ÷ 2 x 0.0018) +0.55
NSR-1-10,15-F	(st+178)x0.0024+0.125
NSR-1-10,15-X	(st+178)x0.003+0.13
NSR-1-30-B	(st ÷ 2 x 0.0028) +1.148
NSR-1-30-F	(st+234)x0.0042+0.2
NSR-1-50-B	(st ÷ 2 x 0.0034) +1.234
NSR-1-50-F	(st+178)x0.0049+0.22

2-head specifications

Item		NSR-2-10	NSR-2-15	NSR-2-30	NSR-2-50
Max. horizontal transfer weight	kg / 1 head	5	7.5	15	25
Stroke	mm	50 to 1000			
Max. stroke	mm	1800		1740	1690
Pitch between heads	mm	200 to 999		260 to 999	310 to 999
Max. pitch between heads	mm	999			
Product additional weight	kg	(Pitch between heads x 0.0109) + 1.7		(Pitch between heads x 0.0176) + 2.79	(Pitch between heads x 0.0311) + 4.66

*1 : Select so that the pitch between heads and strokes total 2000 mm or less.

LCM
LCR
LCG
LCW
LCX
STM
STG
STS/STL
STR2
UCA2
ULK*
JSK/M2
JSG
JSC3/JSC4
USSD
UFCD
USC
UB
JSB3
LMB
LML
HCM
HCA
LBC
CAC4
UCAC2
CAC-N
UCAC-N
RCS2
RCC2
PCC
SHC
MCP
GLC
MFC
BBS
RRC
GRC
RV3*
NHS
HRL
LN
Hand
Chuk
MecHnd/Chuk
ShkAbs
FJ
FK
SpdContr
Ending

How to order

NSR - 2 - 10 - 1000 - 500 - L 3 B A

- Ⓐ Head number
- Ⓑ Load capacity
- Ⓒ X-axis stroke *1
- Ⓓ Pitch between heads *2, *3
- Ⓔ Adjustable stroke block
- Ⓕ Port position/speed controller/mounting bracket *4, *5
- Ⓖ Cableveyor *6
- Ⓗ Switch

Code	Description
Ⓐ Head number	
1	1 pieces
2	2 pieces
Ⓑ Load capacity (kg)	
10	10
15	15
30	30
50	50
Ⓒ X-axis stroke (1 mm pitch)	
50	50
to	to
2000	2000

Ⓓ Pitch between heads (1 mm pitch)

	Load capacity (kg)			
	10	**15**	**30**	**50**
200	200	200	260	310
to	to	to	to	to
999	999	999	999	999

Ⓔ Adjustable stroke block	
Blank	None
L	Left
R	Right
D	Both sides
Ⓕ Port position/speed controller/mounting bracket	
Blank	Port position L
2	Port position R
3	Port position L, with speed controller
4	Port position R, with speed controller
5 *7	Port position L, with mounting bracket LB
6 *7	Port position R, with mounting bracket LB
7 *7	Port position L, with speed controller, mounting bracket LB
8 *7	Port position R, with speed controller, mounting bracket LB
Ⓖ Cableveyor	
Blank	None
B	Vertical installation
F	Horizontal installation
W	Vertical installation
X	Horizontal installation
Ⓗ Switch	
Blank	2-wire proximity T2H3 (with 2 pcs.)
A	3-wire proximity T3H3 (with 2 pcs.)

⚠ Precautions for model No. selection

*1 : If X-axis stroke of NSR-30, 50 and NSR-10, 15 are 1001 mm or more, front cover uses tension method.
*2 : Can be selected only for 2-head.
*3 : Select so that the pitch between heads and strokes total 2000 mm or less.
*4 : Speed controller is SC3W-6-6 (NSR-10/15), SC3W-8-8 (NSR-30) or SC3W-15-10 (NSR-50) x 2 pieces.
*5 : If port position R is selected, mounting orientation of the cableveyor is reversed. (Exit is port side)

Port position L direction

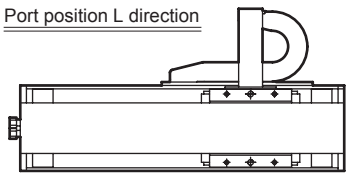

Port position R direction

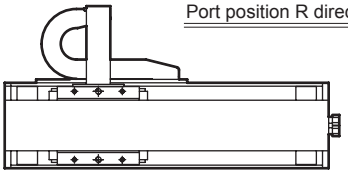

*6 : Refer to table below for the cableveyor capacity.

Item	B	F	W	X
For NSR-*-10,15	22x25	22x25	25x38	22x50
For NSR-*-30	25x58	25x58	-	-
For NSR-*-50	25x78	25x78	-	-

● Only NSR-10 and 15 can be selected for “W” and “X”.

*7 : Options 5, 6, 7 and 8, and cableveyor B and W cannot be combined.

Switch specifications (T Series)

Item	Proximity 2-wire	Proximity 3-wire
	T2H3	T3H3
Applications	Dedicated for programmable controller	For programmable controller, relay
Output method	-	NPN output
Power supply voltage	-	10 to 28 VDC
Load voltage	10 to 30 VDC	30 VDC or less
Load current	5 to 20 mA (*1)	100 mA or less
Current consumption	-	10 mA or less at 24 VDC (when ON)
Internal voltage drop	4V or less	0.5V or less
Indicator	LED (Lit when ON)	
Leakage current	1 mA or less	10 μA or less
Lead wire (standard)	3 m (oil resistant vinyl cabtyre cable 2-conductor 0.2 m^2)	3 m (oil resistant vinyl cabtyre cable 3-conductor 0.2 m^2)
Max. shock resistance	980 m/s^2	
Insulation resistance	20 MΩ and over with 500 VDC megger	
Withstand voltage	No failure after 1 minute of 1,000 VAC application.	
Ambient temperature	-10 to +60°C	
Degree of protection	IEC standards IP67, JIS C0920 (dust proof), oil resistance	
Weight	49 g	

*1 : Max. load current: 20 mA at 25˚C. The current is lower than 20 mA if the operating ambient temperature around the switch is higher than 25˚C. (5 to 10 mA at 60°C)

Dimensions

● T*H Series (straight lead wire)

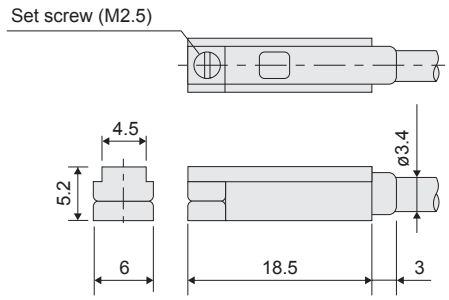

● T2H

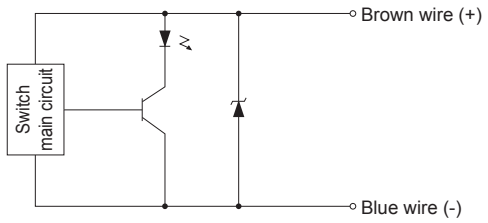

● T3H

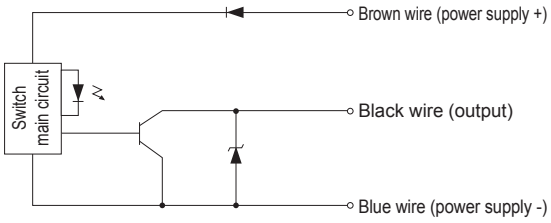

LCM
LCR
LCG
LCW
LCX
STM
STG
STS/STL
STR2
UCA2
ULK*
JSK/M2
JSG
JSC3/JSC4
USSD
UFCD
USC
UB
JSB3
LMB
LML
HCM
HCA
LBC
CAC4
UCAC2
CAC-N
UCAC-N
RCS2
RCC2
PCC
SHC
MCP
GLC
MFC
BBS
RRC
GRC
RV3*
NHS
HRL
LN
Hand
Chuk
MecHnd/Chuk
ShkAbs
FJ
FK
SpdContr
Ending

Dimensions CAD

● Basic

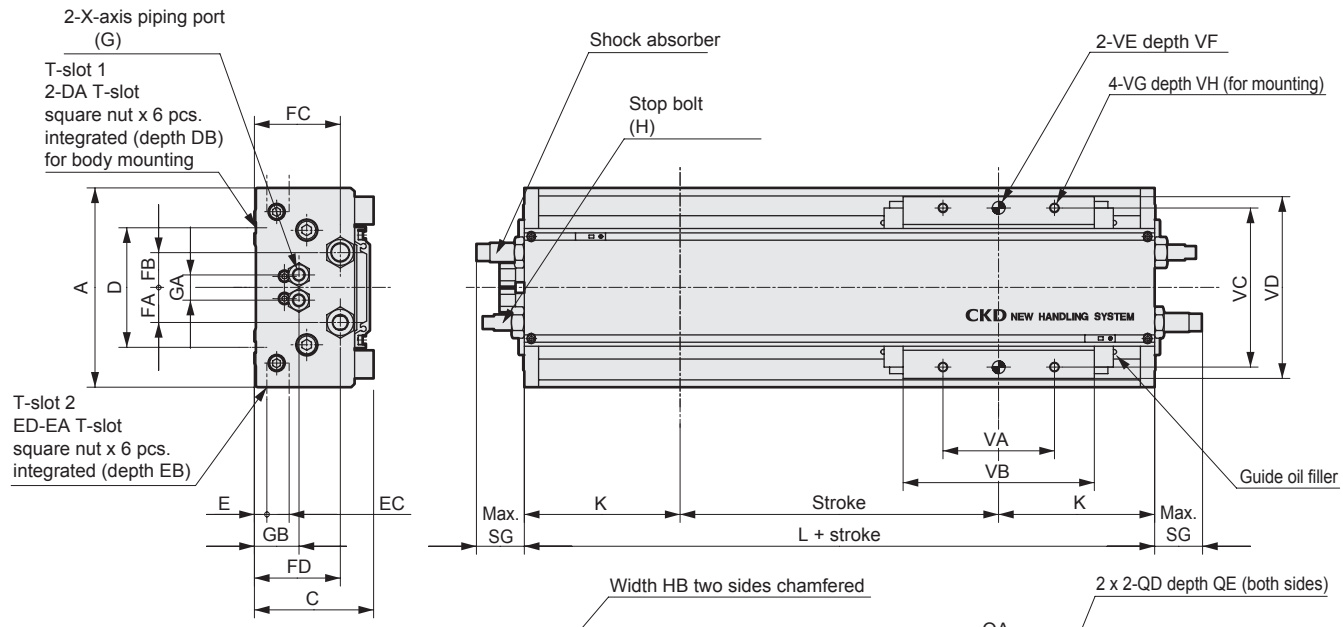

● Tension plate

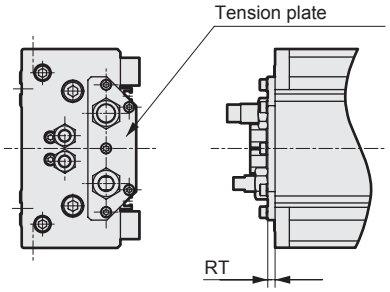

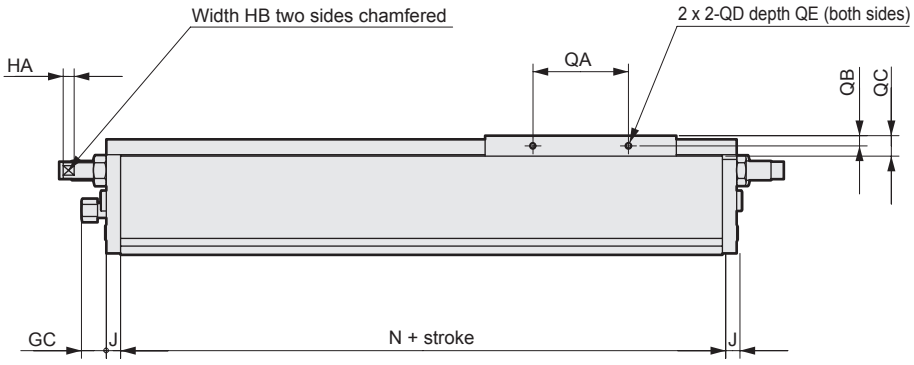

● T-slot section detailed dimensions

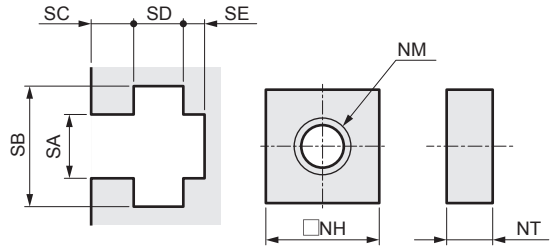

T-slot section

Integrated square nut

T-slot 1								
Model No.	SA	SB	SC	SD	SE	NH	NM	NT
NSR-10	7	11	5	6	1	10	M6	5
NSR-15	7	11	5	6	1	10	M6	5
NSR-30	10.5	17.6	8	9	2	17	M10	8
NSR-50	12.5	19.6	9	10.4	1.6	19	M12	10

T-slot 2								
Model No.	SA	SB	SC	SD	SE	NH	NM	NT
NSR-10	5	8.5	4	4	1	8	M4	3.2
NSR-15	5	8.5	4	4	1	8	M4	3.2
NSR-30	5.5	9.5	4	4.5	2.5	9	M5	4
NSR-50	6.5	10.6	4.5	6	3	10	M6	5

Model No.	A	C	D	DA	DB	E	EA	EB	EC	ED	FA	FB	FC	FD	G	GA	GB
NSR-10	125	75	75	M6	11	8	M4	8	-	2	22	22	54	54	Rc1/8	16	28
NSR-15	125	75	75	M6	11	8	M4	8	-	2	22	22	54	54	Rc1/8	16	28
NSR-30	165	105	110	M10	18	11.5	M5	10.5	14	4	25	24	78	82	Rc1/4	27	37.5
NSR-50	200	120	130	M12	21	11.5	M6	13	16	4	30	30	88.5	88.5	Rc1/2	35	46.5

Model No.	VC	VD	VE	VF	VG	VH	WG	WK	WL	WY
NSR-10	100	114	ø8H7	12	M6	12	-	137	274	235
NSR-15	100	114	ø8H7	12	M6	12	20	137	274	235
NSR-30	130	154	ø10H7	15	M10	24	25	174	348	307
NSR-50	165	190	ø10H7	15	M12	25	48.5	196	392	339

LCM
LCR
LCG
LCW
LCX
STM
STG
STS/STL
STR2
UCA2
ULK*
JSK/M2
JSG
JSC3/JSC4
USSD
UFCD
USC
UB
JSB3
LMB
LML
HCM
HCA
LBC
CAC4
UCAC2
CAC-N
UCAC-N
RCS2
RCC2
PCC
SHC
MCP
GLC
MFC
BBS
RRC
GRC
RV3*
NHS
HRL
LN
Hand
Chuk
MecHnd/Chuk
ShkAbs
FJ
FK
SpdContr
Ending

Dimensions

● Type with adjustable stroke block

● L (adjustable stroke block left-side mounting)

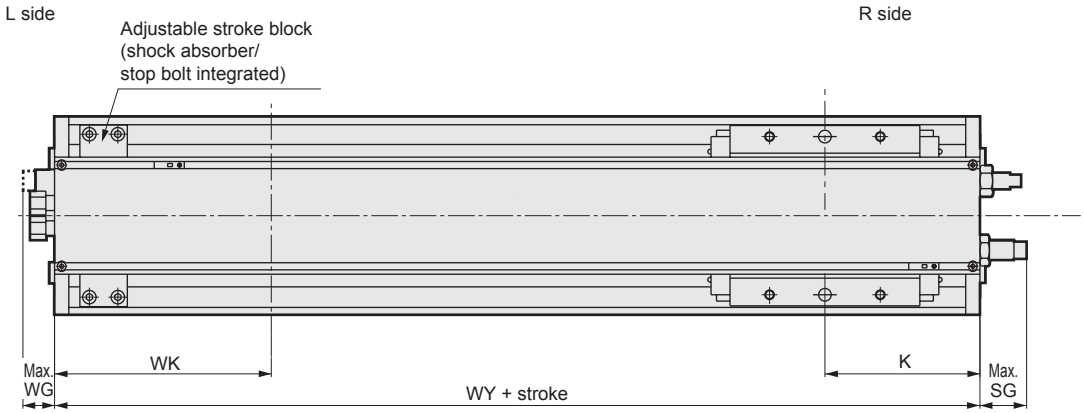

● R (adjustable stroke block right-side mounting)

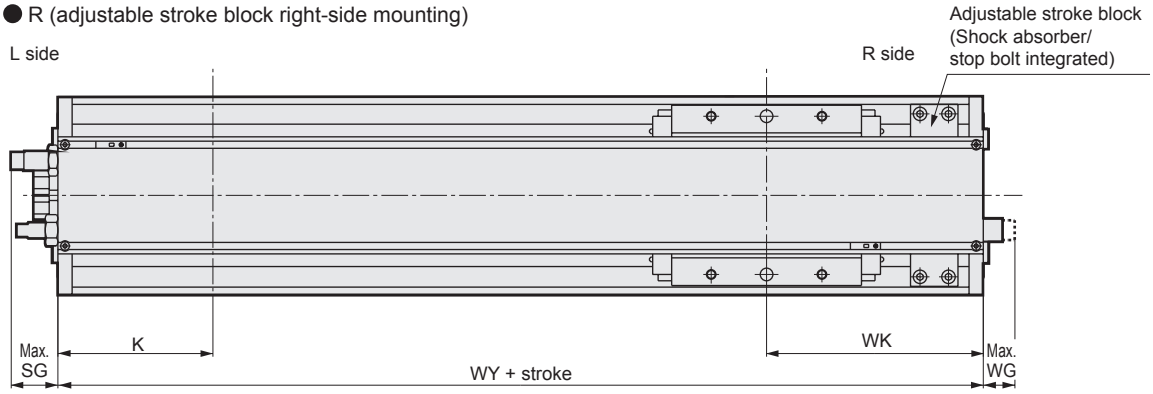

● D (adjustable stroke block both sides installation)

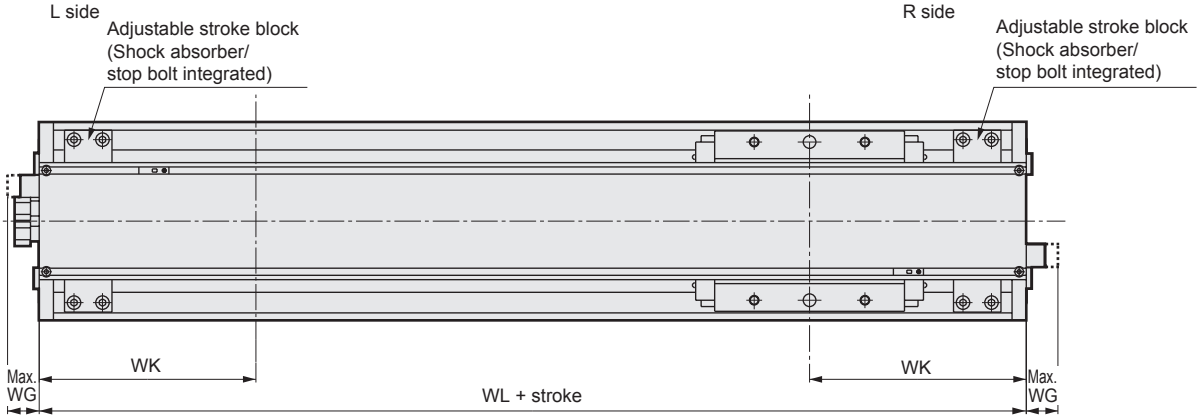

GC	H	HA	HB	J	K	L	N	QA	QB	QC	QD	QE	RT	SG	VA	VB
16	M10x1.25	7	8	9	98	196	178	60	6.5	13	M4	10	4.5	30	70	120
16	M10x1.25	7	8	9	98	196	178	60	6.5	13	M4	10	4.5	56	70	120
8.5	M12x1.25	9	10	16	133	266	234	70	8	17	M5	12	4.5	66	110	150
5.5	M12x1.25	9	10	16	143	286	254	70	9.5	20	M6	14	4.5	101.5	135	177

LCM
LCR
LCG
LCW
LCX
STM
STG
STS/STL
STR2
UCA2
ULK*
JSK/M2
JSG
JSC3/JSC4
USSD
UFCD
USC
UB
JSB3
LMB
LML
HCM
HCA
LBC
CAC4
UCAC2
CAC-N
UCAC-N
RCS2
RCC2
PCC
SHC
MCP
GLC
MFC
BBS
RRC
GRC
RV3*
NHS
HRL
LN
Hand
Chuk
MecHnd/Chuk
ShkAbs
FJ
FK
SpdContr
Ending

Dimensions

● Type with cableveyor (vertical mounting)

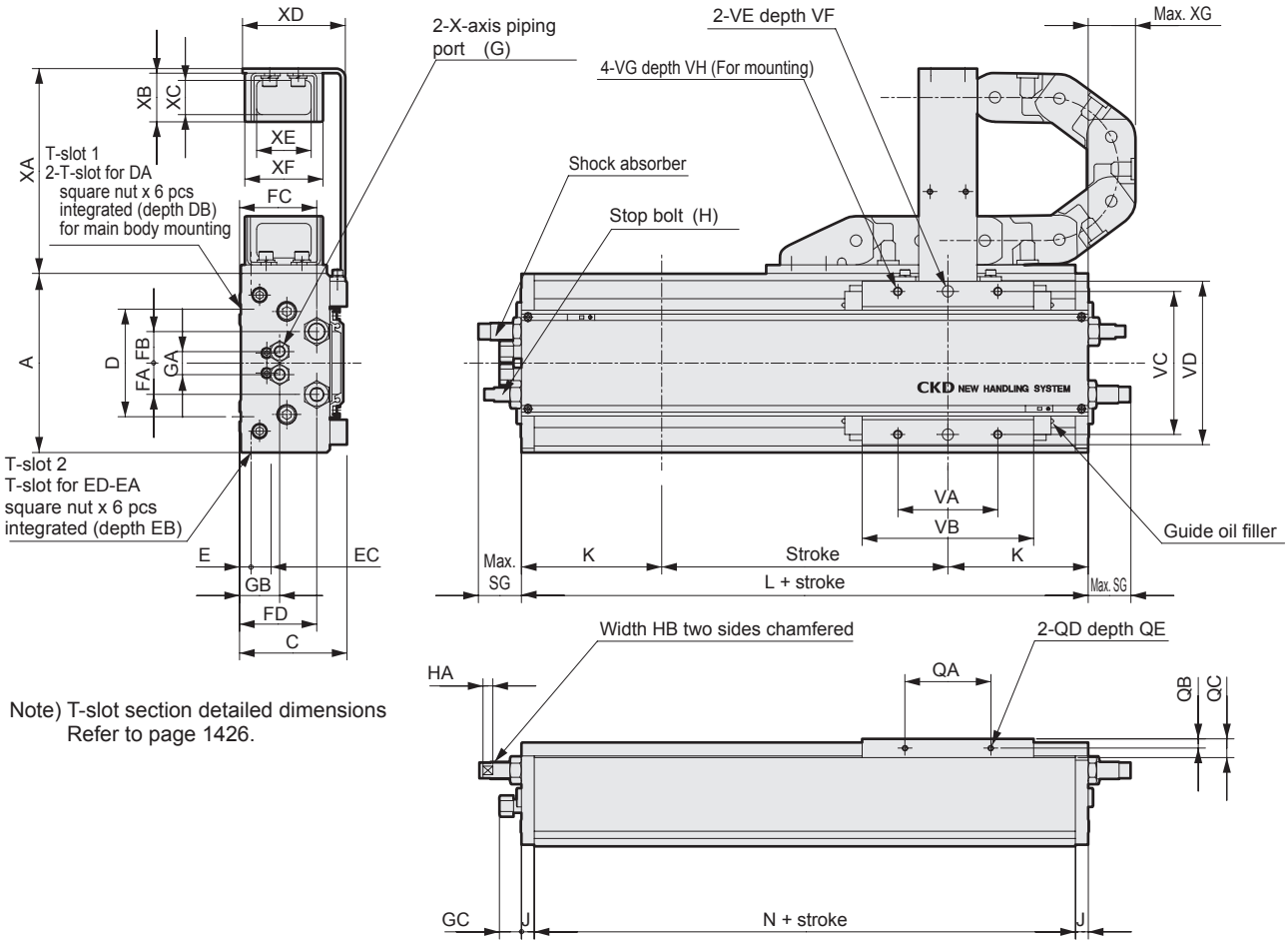

Note) T-slot section detailed dimensions
Refer to page 1426.

● 2-head

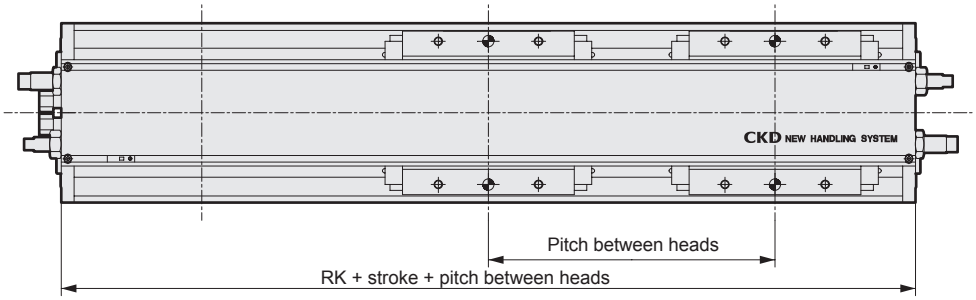

Model No.	A	C	D	DA	DB	E	EA	EB	EC	ED	FA	FB	FC	FD	G	GA	GB		
NSR-10	125	75	75	M6	11	8	M4	8	-	2	22	22	54	54	Rc1/8	16	28		
NSR-15	125	75	75	M6	11	8	M4	8	-	2	22	22	54	54	Rc1/8	16	28		
NSR-30	165	105	110	M10	18	11.5	M5	10.5	14	4	25	24	78	82	Rc1/4	27	37.5		
NSR-50	200	120	130	M12	21	11.5	M6	13	16	4	30	30	88.5	88.5	Rc1/2	35	46.5		

Model No.	RG	RH	RJ	RK	SG	VA	VB	VC	VD	VE	VF	VG	VH	Cableveyor	XA	XB	XC
NSR-10	20	7.5	20	196	30	70	120	100	114	ø8H7	12	M6	12	B	112.2	30	22
														W	145.2	36	25
NSR-15	20	7.5	20	196	56	70	120	100	114	ø8H7	12	M6	12	B	112.2	30	22
														W	145.2	36	25
NSR-30	12	-	60	266	66	110	150	130	154	ø10H7	15	M10	24	-	160.5	36	25
NSR-50	15	-	60	286	101.5	135	177	165	190	ø10H7	15	M12	25	-	162.5	36	25

LCM
LCR
LCG
LCW
LCX
STM
STG
STS/STL
STR2
UCA2
ULK*
JSK/M2
JSG
JSC3/JSC4
USSD
UFCD
USC
UB
JSB3
LMB
LML
HCM
HCA
LBC
CAC4
UCAC2
CAC-N
UCAC-N
RCS2
RCC2
PCC
SHC
MCP
GLC
MFC
BBS
RRC
GRC
RV3*
NHS
HRL
LN
Hand
Chuk
MecHnd/Chuk
ShkAbs
FJ
FK
SpdContr
Ending

● Type with cableveyor (horizontal mounting)

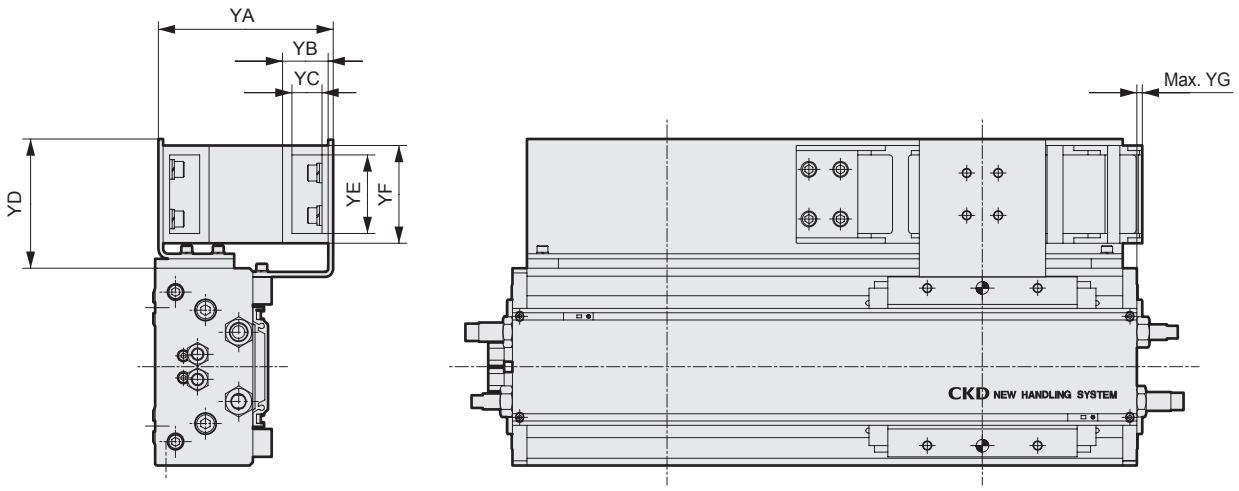

● Type with LB bracket

[NSR-30/50]

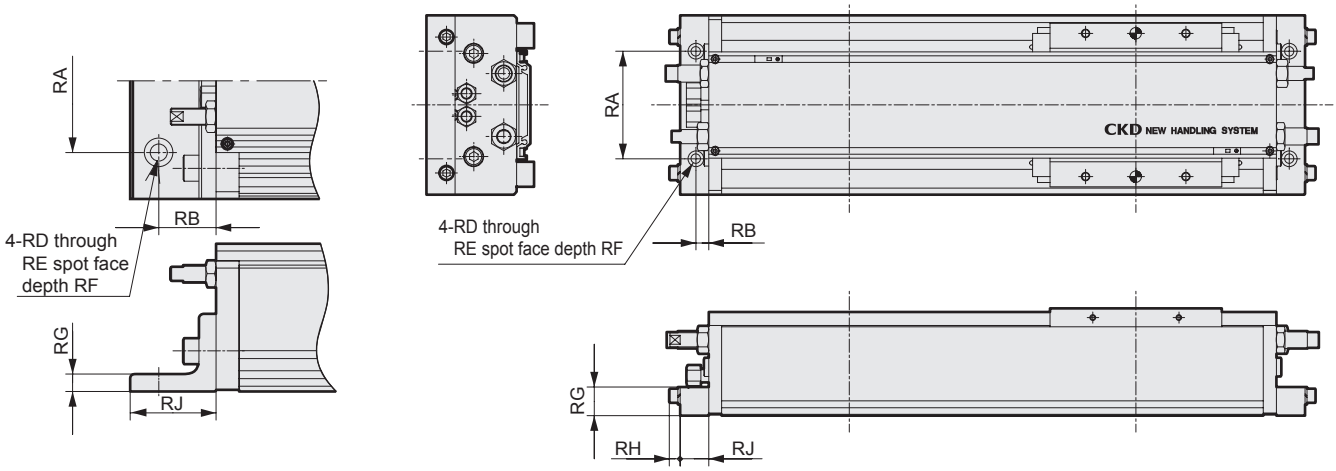

	GC	H	HA	HB	J	K	L	N	QA	QB	QC	QD	QE	RA	RB	RD	RE	RF
	16	M10x1.25	7	8	9	98	196	178	60	6.5	13	M4	10	75	9	ø7	ø12	6.5
	16	M10x1.25	7	8	9	98	196	178	60	6.5	13	M4	10	75	9	ø7	ø12	6.5
	8.5	M12x1.25	9	10	16	133	266	234	70	8	17	M5	12	100	40	ø12	ø20	1
	5.5	M12x1.25	9	10	16	143	286	254	70	9.5	20	M6	14	100	40	ø14.5	ø26	1

XD	XE	XF	XG	Cableveyor	YA	YB	YC	YD	YE	YF	YG
65	25	37	33	F	111	30	22	56	25	37	34
72.5	38	58	75	X	111	30	22	82	50	62	34
65	25	37	33	F	111	30	22	56	25	37	34
72.5	38	58	75	X	111	30	22	82	50	62	34
100.5	58	78	46	-	155	34	25	95	58	74	45
117.5	78	98	36	-	155	34	25	115	78	94	35

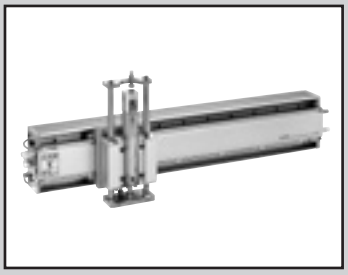

New handling system Z-axis module (HRL)

NHS-H Series

● X-axis stroke: 50 to 2000 mm Z-axis stroke: 50 to 600 mm
Load capacity: 5, 7, 10, 12, 20, 33 kg

RoHS CAD

Specifications

Combination model No.		NHS-*-10***	NHS-*-15**	NHS-*-30**	NHS-*-50**
Item		NSR-10	NSR-15	NSR-30	NSR-50
Bore size	mm	ø20		ø32	ø40
Slider speed	mm/s	100 to 1000			
Shock absorber		NCK-00-1.2-C	NCK-00-2.6-C	FCK-M-3-C	FCK-M-5-C
Stroke	mm	50 to 2000 (1 mm pitch)			
Max. stroke	mm	2000			
Allowable moment	N·m	M1=36.4,M2=30.6,M3=34.2		M1,M3=85.9 M2=82.9	M1,M3=156.2 M2=150.7
Tilt of slider		±0.1° or less			
Piping port size		Rc1/8		Rc1/4	Rc1/2
Position detection sensor		T type proximity switch lead wire 3 m			
Max. horizontal load capacity	kg	10	15	30	50
Speed controller (option)		SC3W-6-6		SC3W-8-8	SC3W-15-10
Repeatability	mm	±0.02			
Weight	Kg	(stx0.0109)+5.5	(stx0.0109)+5.6	(stx0.0176)+10.7	(stx0.0311)+17.9

Z-axis combination specifications

Combination model No.		NHS-*-1005	NHS-*-1007				
		NHS-*-1505	NHS-*-1507	NHS-*-1510	NHS-*-1512		
				NHS-*-3010	NHS-*-3012	NHS-*-3020	
				NHS-*-5010	NHS-*-5012	NHS-*-5020	NHS-*-5033
Z-axis model No.		HRL-1*-05	HRL-1*-10	HRL-1*-15	HRL-1*-15H	HRL-1*-25	HRL-1*-50
Bore size	mm	ø20	ø25	ø32	ø32	ø40	ø50
Speed	mm/s	50 to 300					
Shock absorber (*1)		NCK-00-0.7		NCK-00-1.2		NCK-00-12	
Stroke	mm	50 to 300 (standard body) 301 to 600 (long body)					
Allowable moment	N·m	Refer to technical data (pages 1448 and 1449)					
Piping port size		Rc1/8					Rc1/4
Position detection sensor		T type proximity switch lead wire 3 m					
Max. load capacity (*2)	kg	5	7	10	12	20	33
Adjustable stroke	mm	0 to -10 (lowering end)					
Speed controller (option)		SC3W-6-6				SC3W-6-8	SC3W-8-8
Working fluid		Clean compressed air					
Working pressure	MPa	0.3 (≈44 psi, 3 bar) to 0.7 (≈100 psi, 7 bar)					
Guaranteed proof pressure	MPa	1.05 (≈150 psi, 10.5 bar)					
Ambient temperature	°C	5 (41°F) to 60 (140°F)					
Lubrication		Refer to page 1460 for lubrication.					
Repeatability	mm	±0.1					
Product weight (standard body)	kg	2+(0.003xst)	2.1+(0.0037xst)	2.8+(0.0051xst)	2.9+(0.0069xst)	10.8+(0.0081xst)	11.9+(0.0122xst)
Product weight (long body)	kg	2.3+(0.003xst)	2.4+(0.0037xst)	3.1+(0.0051xst)	3.2+(0.0069xst)	12.5+(0.0081xst)	13.6+(0.0122xst)
Movable part weight (standard body)	kg	0.9+(0.0025xst)	0.9+(0.0027xst)	1.3+(0.0041xst)	1.6+(0.0059xst)	4.1+(0.0066xst)	5.2+(0.0102xst)
Movable part weight (long body)	kg	1.0+(0.0025xst)	1.0+(0.0027xst)	1.5+(0.0041xst)	1.8+(0.0059xst)	4.4+(0.0066xst)	5.7+(0.0102xst)

*1 : Use at 74% or less of the shock absorber's allowable value at the working speed and working air pressure.
*2 : Load capacity varies with air pressure, speed, absorbed energy, load center of gravity, number of X-axis heads and Z-axis stroke.

X-axis stroke adjustment section specifications

Item	Blank	R	L	D
Adjustable stroke right mm	-15 to 0	Full stroke	-15 to 0	Full stroke
Adjustable stroke left mm	-15 to 0	-15 to 0	Full stroke	Full stroke

Z-axis shock absorber specifications

Item	HRL-1*-05,10	HRL-1*-15, 15H	HRL-1*-25,50
Shock absorber	NCK-00-0.7	NCK-00-1.2	NCK-00-12
Max. absorbing capacity J	7	12	120
Absorbing stroke mm	8	10	25
Max. colliding speed mm/s	1500	2000	3000
Max. operating frequency cycle/min	30	30	12

Note: Use at 74% or less of the shock absorber's allowable value at the working speed and working air pressure.

Attachment weight

X-axis model No.	For NSR-10	For NSR-15	For NSR-30	For NSR-50
Attachment weight kg	0.4	0.4	1	1.4

X-axis shock absorber specifications

Item	NCK-00-1.2-C	NCK-00-2.6-C	FCK-M-3-C	FCK-M-5-C
Max. absorbing capacity J	12	26	30	50
Absorbing stroke mm	10	15	16	25
Max. colliding speed mm/s	2000			
Max. operating frequency cycle/min	30	25	20	12

Cableveyor specifications

Item		Cableveyor model No.	Bore size (mm)	Load capacity (kg/m)
For Z-axis	For HRL-05, 10, 15, 15H	TKP18H14-30W40R28TC	14x40	MAX1.0
	For HRL-25, 50	TKP35H22-30W50R37	19x50	MAX1.6
For X-axis	For NHS-10, 15-B, T	TKP35H22-30W25R37	19x24	MAX1.6
	For NHS-10, 15-W, Y	TKP45H25-30W38R50	25x38	MAX3.0
	For NHS-30-B, T	TKP45H25-30W58R50	25x58	MAX3.0
	For NHS-50-B, T	TKP45H25-30W78R50	25x78	MAX3.0

Adjustable stroke block additional weight list

Model No.	Additional weight (kg)
NSR-1-10-R	0.685 Kg
NSR-1-10-L	0.685 kg
NSR-1-10-D	1.370 kg
NSR-1-15-R	0.810 Kg
NSR-1-15-L	0.810 kg
NSR-1-15-D	1.620 kg
NSR-1-30-R	1.140 kg
NSR-1-30-L	1.140 kg
NSR-1-30-D	2.280 kg
NSR-1-50-R	1.750 kg
NSR-1-50-L	1.750 kg
NSR-1-50-D	3.499 kg

Cableveyor additional weight list

Model No.	Additional weight (kg)
NHS-1-10, 15**-B	(X stroke ÷ 2 x 0.0011) + 0.482
NHS-1-10, 15**-W	(X stroke ÷ 2 x 0.0018) + 0.55
NHS-1-10, 15**-T	(X stroke ÷ 2 x 0.0011) + (Z stroke x 0.0006) + 0.682
NHS-1-10, 15**-Y	(X stroke ÷ 2 x 0.0018) + (Z stroke x 0.0006) + 0.75
NHS-1-30**-B	(X stroke ÷ 2 x 0.0028) + 1.148
NHS-1-30**-T	(X stroke ÷ 2 x 0.0028) + (Z stroke x 0.0006) + 1.348
NHS-1-50**-B	(X stroke ÷ 2 x 0.0034) + 1.234
NHS-1-50**-T	(X stroke ÷ 2 x 0.0034) + (Z stroke x 0.0006) + 1.434

2-head specifications

Item	NHS-2-10	NHS-2-15	NHS-2-30	NHS-2-50
Max. horizontal transfer weight kg/1 head	5	7.5	15	25
Stroke mm	50 to 1000			
Max. stroke mm	1800		1731	1690
Pitch between heads mm	200 to 999		269 to 999 (*1)	310 to 999
Max. pitch between heads mm	999			
Product additional weight kg	(Pitch between heads x 0.0109) + 1.7		(Pitch between heads x 0.0176) + 2.79	(Pitch between heads x 0.0311) + 4.66

*1 If NHS-H type and NHS-2-30 are combined, note that pitch between heads differs from discrete X-axis.

How to order

NHS - 2 - 1005 - 1000 - H100 - 500 - L 3 B A Q

- Ⓐ Head number
- Ⓑ Load capacity
- Ⓒ X-axis stroke *1
- Ⓓ Z-axis
- Ⓔ Z-axis stroke
- Ⓕ Pitch between heads *2
- Ⓖ Adjustable stroke block
- Ⓗ Port position and speed controller *4
- Ⓘ Cableveyor *5
- Ⓙ Switch
- Ⓚ Z-axis position locking

Code	Description
Ⓐ X-axis head number	
1	1 pieces
2	2 pieces

Ⓑ Load capacity (kg)

	X-axis	Z-axis
1005	10	5
1007		7
1505	15	5
1507		7
1510		10
1512		12
3010	30	10
3012		12
3020		20
5010	50	10
5012		12
5020		20
5033		33

Ⓒ X-axis stroke (1 mm pitch)	
50	50
to	to
2000	2000

Ⓓ Z-axis	
H	HRL-05
	HRL-10
	HRL-15
	HRL-15H
	HRL-25
	HRL-50

Ⓔ Z-axis stroke (1 mm pitch)		
50	50	Standard body
75	75	
100	100	
125	125	
150	150	
200	200	
250	250	
300	300	
301 to 600	301 to 600	Long body

Ⓕ Pitch between heads (1 mm pitch)

	Load capacity (kg)			
	10	**15**	**30**	**50**
200	200	200	269	310
to	to	to	to	to
999	999	999	999	999

Ⓖ Adjustable stroke block	
Blank	None
L	Left
R	Right
D	Both sides

Ⓗ Port position and speed controller	
Blank	X-axis port position L
2	X-axis port position R
3	X-axis port position L, X Z-axis with speed controller
4	X-axis port position R, X Z-axis with speed controller

Ⓘ Cableveyor	
Blank	None
B	X-axis vertical installation
T	X-axis vertical installation, Z-axis installation
W	X-axis vertical installation
Y	X-axis vertical installation, Z-axis installation

Ⓙ Switch	*6
Blank	2-wire proximity switch, X-axis... T2H3, Z-axis... T2H3
A	3-wire proximity switch, X-axis... T3H3, Z-axis... T3H3

Ⓚ Z-axis position locking	
Blank	Without
Q	With

⚠ Precautions for model No. selection

*1 If X-axis stroke of NSR-30, 50 and NSR-10, 15 is 1001 mm and over, front cover uses tension method.
*2 Can be selected for two heads only.
*3 Select so that the pitch between heads and strokes total 2000 mm or less.
*4 If port position R is selected, mounting orientation of the cableveyor is reversed. (Exit is port side)

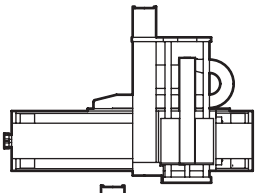

Port position L direction

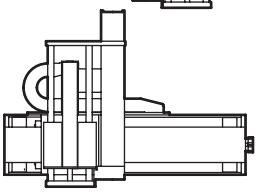

Port position R direction

*5 Refer to the table below for the cableveyor X/Z axis capacity.

Item	B/T	W/Y
X-axis For NHS-*-10** -15**	22x25	25x38
For NHS-*-30**	25x58	-
For NHS-*-50**	25x78	-
Z-axis HRL-1*-05 10, 15, 15H	14x40	14x40
HRL-1*-25, 50	22x50	-

● Only NHS-*-10** and 15** can be selected for "W" and "Y".
*6 2 switches are installed per X-axis and Z-axis.
*7 Consult with CKD for specifications not indicated at right.

Switch specifications (T Series)

Item	Proximity 2-wire	Proximity 3-wire
	T2H3	T3H3
Applications	Dedicated for programmable controller	For programmable controller, relay
Output method	-	NPN output
Power supply voltage	-	10 to 28 VDC
Load voltage	10 to 30 VDC	30 VDC or less
Load current	5 to 20 mA (*1)	100 mA or less
Current consumption	-	10 mA or less at 24 VDC (when ON)
Internal voltage drop	4V or less	0.5V or less
Indicator	LED (Lit when ON)	
Leakage current	1 mA or less	10 μA or less
Lead wire (standard)	3 m (oil resistant vinyl cabtyre cable 2-conductor 0.2 m^2)	3 m (oil resistant vinyl cabtyre cable 3-conductor 0.2 m^2)
Max. shock resistance	980 m/s^2	
Insulation resistance	20 MΩ and over with 500 VDC megger	
Withstand voltage	No failure after 1 minute of 1,000 VAC application.	
Ambient temperature	-10 to +60°C	
Degree of protection	IEC standards IP67, JIS C0920 (dust proof), oil resistance	
Weight	49 g	

*1 : Max. load current: 20 mA at 25˚C. The current is lower than 20 mA if the operating ambient temperature around the switch is higher than 25˚C. (5 to 10 mA at 60°C)

Dimensions

● T*H Series (straight lead wire)

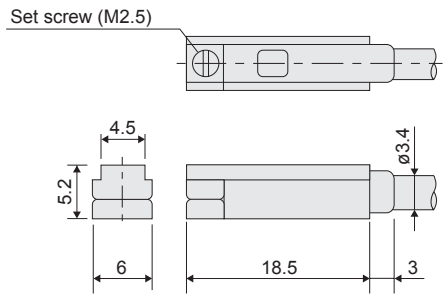

● T2H

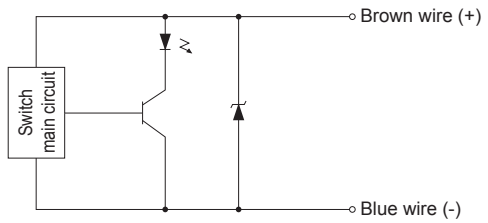

● T3H

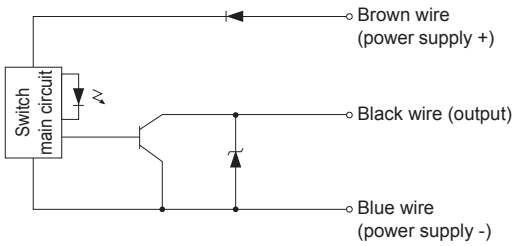

LCM
LCR
LCG
LCW
LCX
STM
STG
STS/STL
STR2
UCA2
ULK*
JSK/M2
JSG
JSC3/JSC4
USSD
UFCD
USC
UB
JSB3
LMB
LML
HCM
HCA
LBC
CAC4
UCAC2
CAC-N
UCAC-N
RCS2
RCC2
PCC
SHC
MCP
GLC
MFC
BBS
RRC
GRC
RV3*
NHS
HRL
LN
Hand
Chuk
MecHnd/Chuk
ShkAbs
FJ
FK
SpdContr
Ending

Dimensions

● Basic

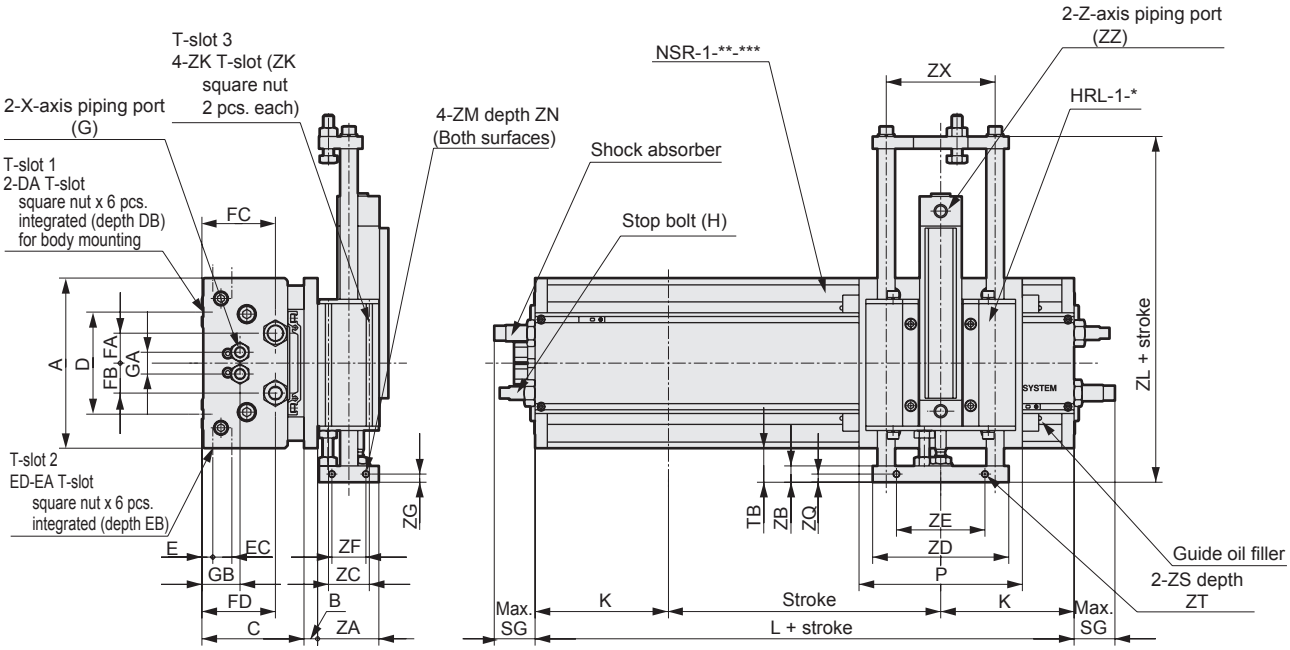

Note) T-slot section 1 and 2 detailed dimensions
Refer to page 1426.
T-slot section 3 detailed dimensions
Refer to pages 1454 to 1457.

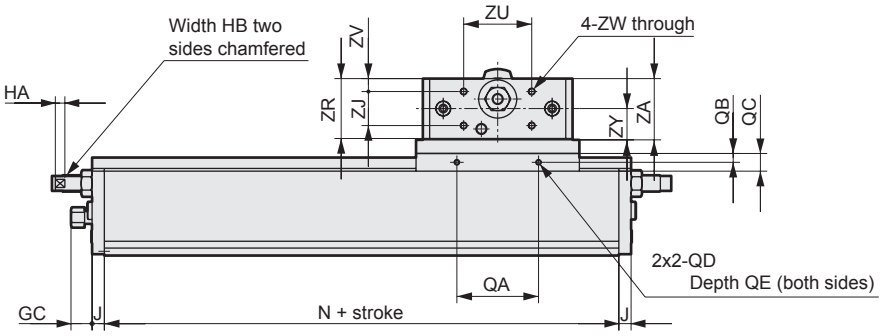

Model No.	A	B	C	D	DA	DB	E	EA	EB	EC	ED	FA	FB	FC	FD
NHS-*-10**-H	125	10	75	75	M6	11	8	M4	8	-	2	22	22	54	54
NHS-*-15**-H	125	10	75	75	M6	11	8	M4	8	-	2	22	22	54	54
NHS-*-30**-H	165	15	105	110	M10	18	11.5	M5	10.5	14	4	25	24	78	82
NHS-*-50**-H	200	15	120	130	M12	21	11.5	M6	13	16	4	30	30	88.5	88.5

Model No.	SG
NHS-*-10**-H	30
NHS-*-15**-H	56
NHS-*-30**-H	66
NHS-*-50**-H	101.5

Model No.	TB		ZA	ZB	ZC	ZD	ZE	ZF	ZG	ZJ	ZK	ZL		ZM	ZN	ZQ	ZR	ZS
	Std body	Long body										Std body	Long body					
HRL-1-05	25	47.5	45	12	30	100	65	25	6	25	M4	154	199	M5	10	6	44	M5
HRL-1-10	25	47.5	45	12	30	100	65	25	6	25	M4	154	199	M5	10	6	44	M5
HRL-1-15	25	52.5	45	12	30	120	75	25	6	25	M4	154	209	M5	10	6	44	M5
HRL-1-15H	25	52.5	45	12	30	120	75	25	6	25	M4	154	209	M5	10	6	44	M5
HRL-1-25	45	74	80	16	30	200	-	45	8	45	M4	252	310	M8	10	-	75	-
HRL-1-50	25	54	80	19	30	200	-	45	9.5	45	M4	255	313	M8	10	-	75	-

LCM
LCR
LCG
LCW
LCX
STM
STG
STS/STL
STR2
UCA2
ULK*
JSK/M2
JSG
JSC3/JSC4
USSD
UFCD
USC
UB
JSB3
LMB
LML
HCM
HCA
LBC
CAC4
UCAC2
CAC-N
UCAC-N
RCS2
RCC2
PCC
SHC
MCP
GLC
MFC
BBS
RRC
GRC
RV3*
NHS
HRL
LN
Hand
Chuk
MecHnd/Chuk
ShkAbs
FJ
FK
SpdContr
Ending

● For HRL-1-25 or more

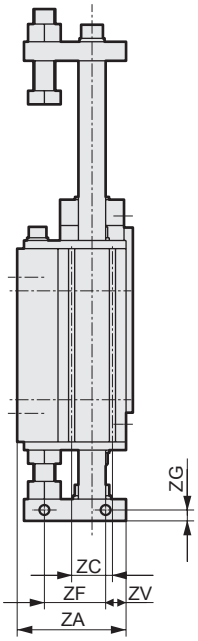

For HRL-1-25 or more

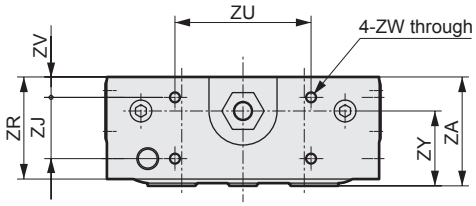

Note) Refer to NSR dimensions on pages 1426 to 1429 for dimensions (with adjustable stroke block and cableveyor, etc.) when X-axis option installed.

	G	GA	GB	GC	H	HA	HB	J	K	L	N	P	QA	QB	QC	QD	QE
	Rc1/8	16	28	16	M10x1.25	7	8	9	98	196	178	120	60	6.5	13	M4	10
	Rc1/8	16	28	16	M10x1.25	7	8	9	98	196	178	120	60	6.5	13	M4	10
	Rc1/4	27	37.5	8.5	M12x1.25	9	10	16	133	266	234	150	70	8	17	M5	12
	Rc1/2	35	46.5	5.5	M12x1.25	9	10	16	143	286	254	177	70	9.5	20	M6	14

	ZT	ZU	ZV	ZW	ZX	ZY	ZZ
	10	50	9.5	M5	80	23	Rc1/8
	10	50	9.5	M5	80	23	Rc1/8
	10	60	9.5	M5	94	23	Rc1/8
	10	60	9.5	M5	94	23	Rc1/8
	-	100	15	M8	150	55	Rc1/8
	-	100	15	M8	150	55	Rc1/4

LCM
LCR
LCG
LCW
LCX
STM
STG
STS/STL
STR2
UCA2
ULK*
JSK/M2
JSG
JSC3/JSC4
USSD
UFCD
USC
UB
JSB3
LMB
LML
HCM
HCA
LBC
CAC4
UCAC2
CAC-N
UCAC-N
RCS2
RCC2
PCC
SHC
MCP
GLC
MFC
BBS
RRC
GRC
RV3*
NHS
HRL
LN
Hand
Chuk
MecHnd/Chuk
ShkAbs
FJ
FK
SpdContr
Ending

Dimensions CAD

● Type with speed controller

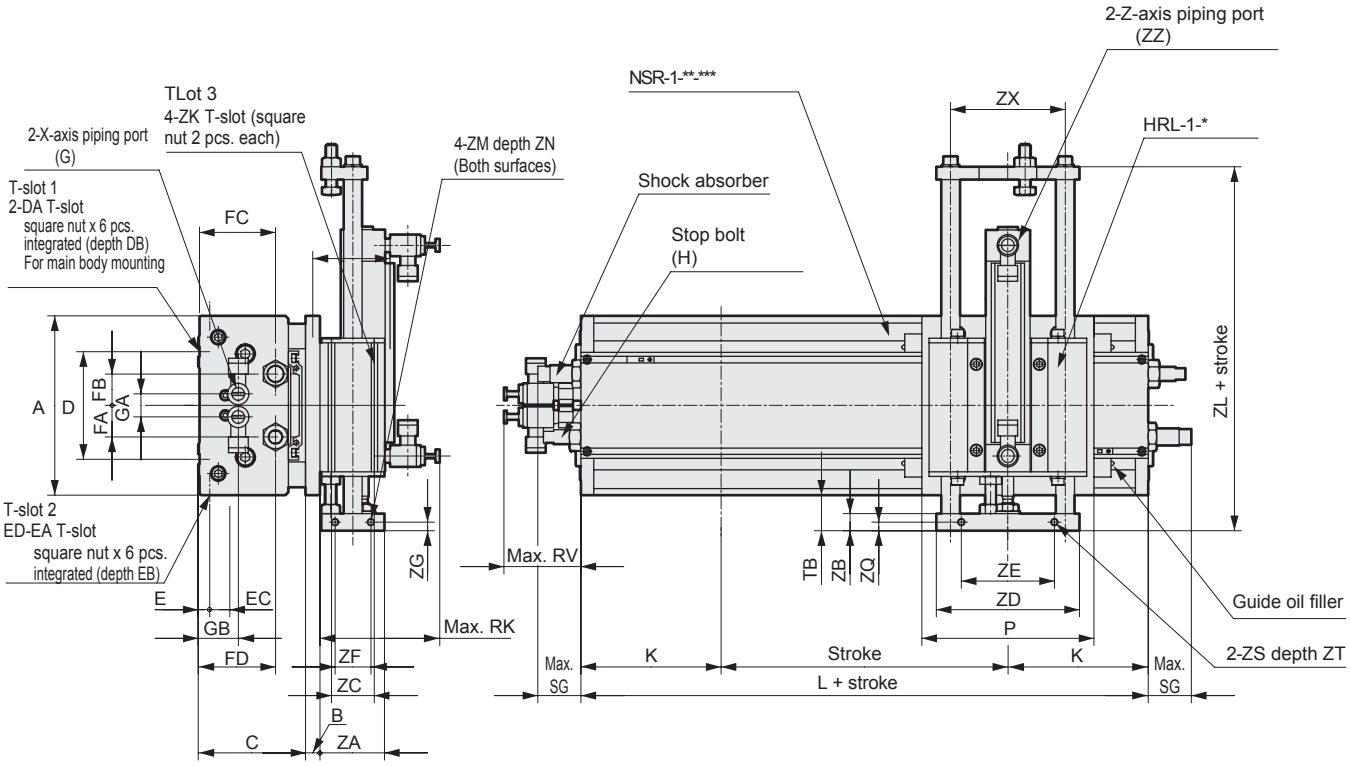

Note) T-slot section 1 and 2 detailed dimensions
Refer to page 1426.
T-slot section 3 detailed dimensions
Refer to pages 1454 to 1457.

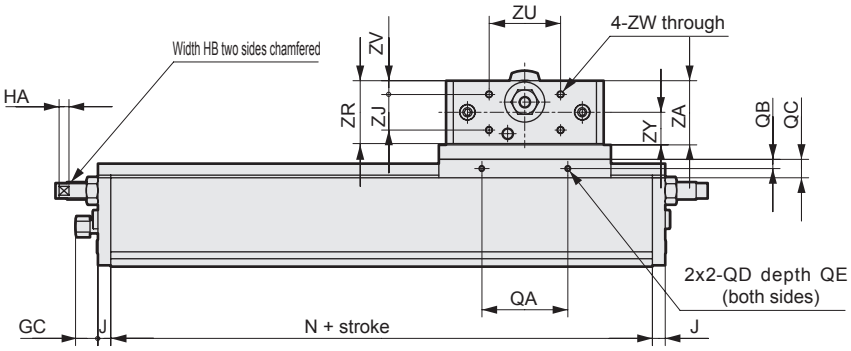

Model No.	A	B	C	D	DA	DB	E	EA	EB	EC	ED	FA	FB	FC	FD
NHS-*-10**-H	125	10	75	75	M6	11	8	M4	8	-	2	22	22	54	54
NHS-*-15**-H	125	10	75	75	M6	11	8	M4	8	-	2	22	22	54	54
NHS-*-30**-H	165	15	105	110	M10	18	11.5	M5	10.5	14	4	25	24	78	82
NHS-*-50**-H	200	15	120	130	M12	21	11.5	M6	13	16	4	30	30	88.5	88.5

Model No.	RV	RW	SG	XG	
				B.T	W.Y
NHS-*-10**-H	54.2	196	30	33	75
NHS-*-15**-H	54.2	196	56	33	75
NHS-*-30**-H	53.2	266	66	46	-
NHS-*-50**-H	65.2	286	101.5	36	-

Model No.	RK	RY	TB		ZA	ZB	ZC	ZD	ZE	ZF	ZG	ZJ	ZK	ZL		ZM	ZN	ZQ	ZR
			Std body	Long body										Std body	Long body				
HRL-1-05	79.7	215	25	47.5	45	12	30	100	65	25	6	25	M4	154	199	M5	10	6	44
HRL-1-10	82.2	215	25	47.5	45	12	30	100	65	25	6	25	M4	154	199	M5	10	6	44
HRL-1-15	85.7	215	25	52.5	45	12	30	120	75	25	6	25	M4	154	209	M5	10	6	44
HRL-1-15H	85.7	215	25	52.5	45	12	30	120	75	25	6	25	M4	154	209	M5	10	6	44
HRL-1-25	115.2	335	45	74	80	16	30	200	-	45	8	45	M4	252	310	M8	10	-	75
HRL-1-50	126.2	335	25	54	80	19	30	200	-	45	9.5	45	M4	255	313	M8	10	-	75

LCM
LCR
LCG
LCW
LCX
STM
STG
STS/STL
STR2
UCA2
ULK*
JSK/M2
JSG
JSC3/JSC4
USSD
UFCD
USC
UB
JSB3
LMB
LML
HCM
HCA
LBC
CAC4
UCAC2
CAC-N
UCAC-N
RCS2
RCC2
PCC
SHC
MCP
GLC
MFC
BBS
RRC
GRC
RV3*
NHS
HRL
LN
Hand
Chuk
MecHnd/Chuk
ShkAbs
FJ
FK
SpdContr
Ending

● Z-axis position locking

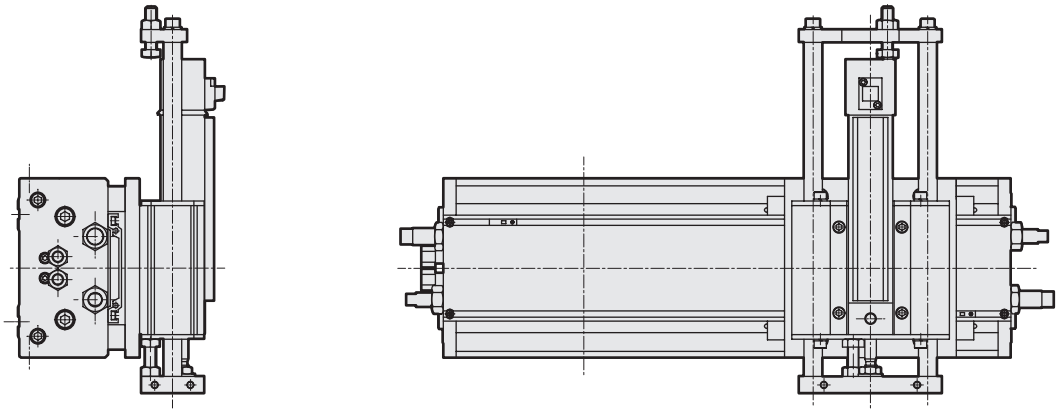

● 2-head

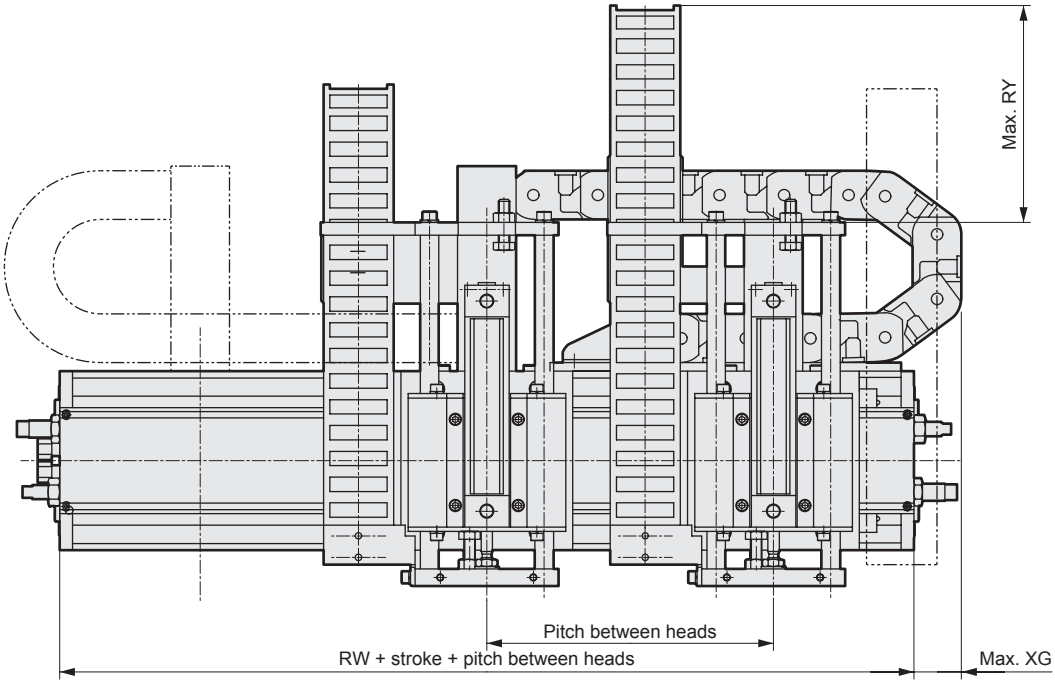

Note) Refer to NSR dimensions on pages 1426 to 1429 for dimensions (with adjustable stroke block and cableveyor, etc.) when X-axis option installed.

	G	GA	GB	GC	H	HA	HB	J	K	L	N	P	QA	QB	QC	QD	QE
	Rc1/8	16	28	16	M10x1.25	7	8	9	98	196	178	120	60	6.5	13	M4	10
	Rc1/8	16	28	16	M10x1.25	7	8	9	98	196	178	120	60	6.5	13	M4	10
	Rc1/4	27	37.5	8.5	M12x1.25	9	10	16	133	266	234	150	70	8	17	M5	12
	Rc1/2	35	46.5	5.5	M12x1.25	9	10	16	143	286	254	177	70	9.5	20	M6	14

	ZS	ZT	ZU	ZV	ZW	ZX	ZY	ZZ
	M5	10	50	9.5	M5	80	23	Rc1/8
	M5	10	50	9.5	M5	80	23	Rc1/8
	M5	10	60	9.5	M5	94	23	Rc1/8
	M5	10	60	9.5	M5	94	23	Rc1/8
	-	-	100	15	M8	150	55	Rc1/8
	-	-	100	15	M8	150	55	Rc1/4

LCM
LCR
LCG
LCW
LCX
STM
STG
STS/STL
STR2
UCA2
ULK*
JSK/M2
JSG
JSC3/JSC4
USSD
UFCD
USC
UB
JSB3
LMB
LML
HCM
HCA
LBC
CAC4
UCAC2
CAC-N
UCAC-N
RCS2
RCC2
PCC
SHC
MCP
GLC
MFC
BBS
RRC
GRC
RV3*
NHS
HRL
LN
Hand
Chuk
MecHnd/Chuk
ShkAbs
FJ
FK
SpdContr
Ending

Dimensions

● Cableveyor

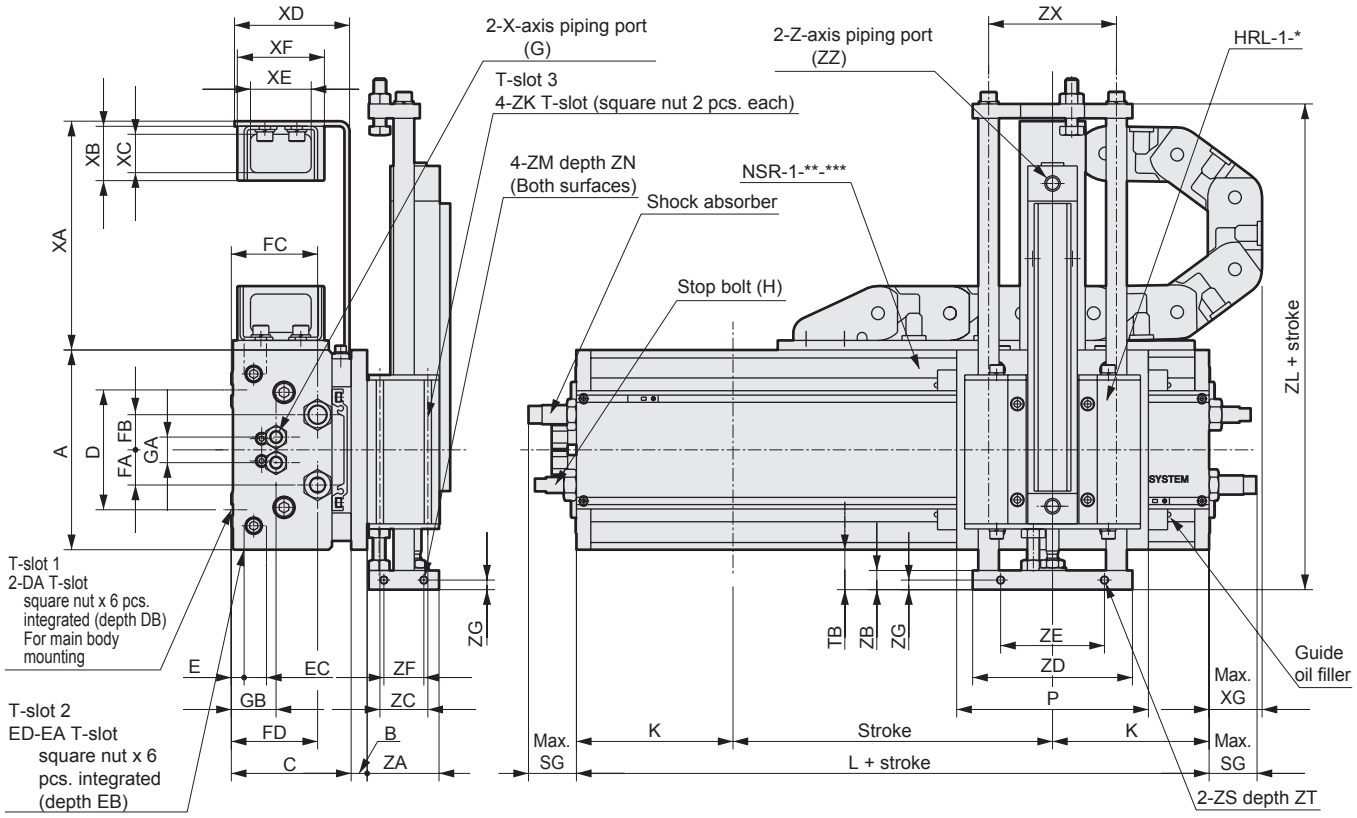

Note) T-slot section 1 and 2 detailed dimensions
Refer to page 1426.
T-slot section 3 detailed dimensions
Refer to pages 1454 to 1457.

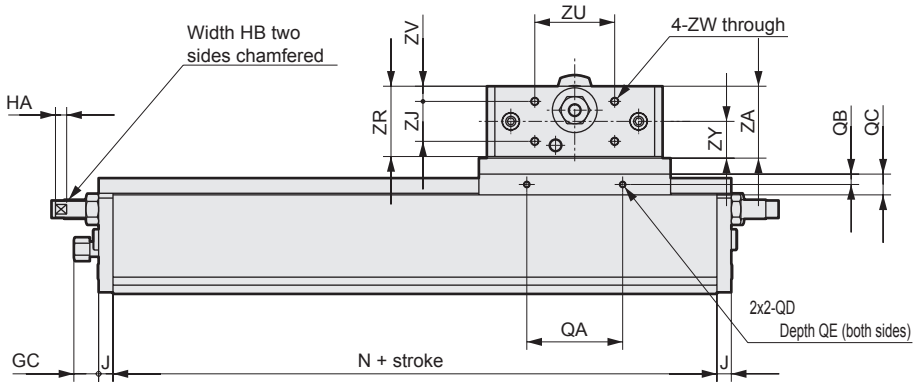

Model No.	A	B	C	D	DA	DB	E	EA	EB	EC	ED	FA	FB	FC	FD
NHS-1-10**-H	125	10	75	75	M6	11	8	M4	8	-	2	22	22	54	54
NHS-1-15**-H	125	10	75	75	M6	11	8	M4	8	-	2	22	22	54	54
NHS-1-30**-H	165	15	105	110	M10	18	11.5	M5	10.5	14	4	25	24	78	82
NHS-1-50**-H	200	15	120	130	M12	21	11.5	M6	13	16	4	30	30	88.5	88.5

Model No.	G	GA	GB	GC	H	HA	HB	J	K	L	N	P	QA	QB	QC	QD	QE
NHS-1-10**-H	Rc1/8	16	28	16	M10x1.25	7	8	9	98	196	178	120	60	6.5	13	M4	10
NHS-1-15**-H	Rc1/8	16	28	16	M10x1.25	7	8	9	98	196	178	120	60	6.5	13	M4	10
NHS-1-30**-H	Rc1/4	27	37.5	8.5	M12x1.25	9	10	16	133	266	234	150	70	8	17	M5	12
NHS-1-50**-H	Rc1/2	35	46.5	5.5	M12x1.25	9	10	16	143	286	254	177	70	9.5	20	M6	14

Model No.	SG		XA	XB	XC	XD	XE	XF	XG
NHS-1-10**-H	30	B	112.2	30	22	65	25	37	33
		W	145.2	36	25	72	38	58	75
NHS-1-15**-H	56	B	112.2	30	22	65	25	37	33
		W	145.2	36	25	72	38	58	75
NHS-1-30**-H	66	-	160.5	36	25	100.5	58	78	46
NHS-1-50**-H	101.5	-	162.5	36	25	117.5	78	98	36

LCM
LCR
LCG
LCW
LCX
STM
STG
STS/STL
STR2
UCA2
ULK*
JSK/M2
JSG
JSC3/JSC4
USSD
UFCD
USC
UB
JSB3
LMB
LML
HCM
HCA
LBC
CAC4
UCAC2
CAC-N
UCAC-N
RCS2
RCC2
PCC
SHC
MCP
GLC
MFC
BBS
RRC
GRC
RV3*
NHS
HRL
LN
Hand
Chuk
MecHnd/Chuk
ShkAbs
FJ
FK
SpdContr
Ending

● Cableveyor

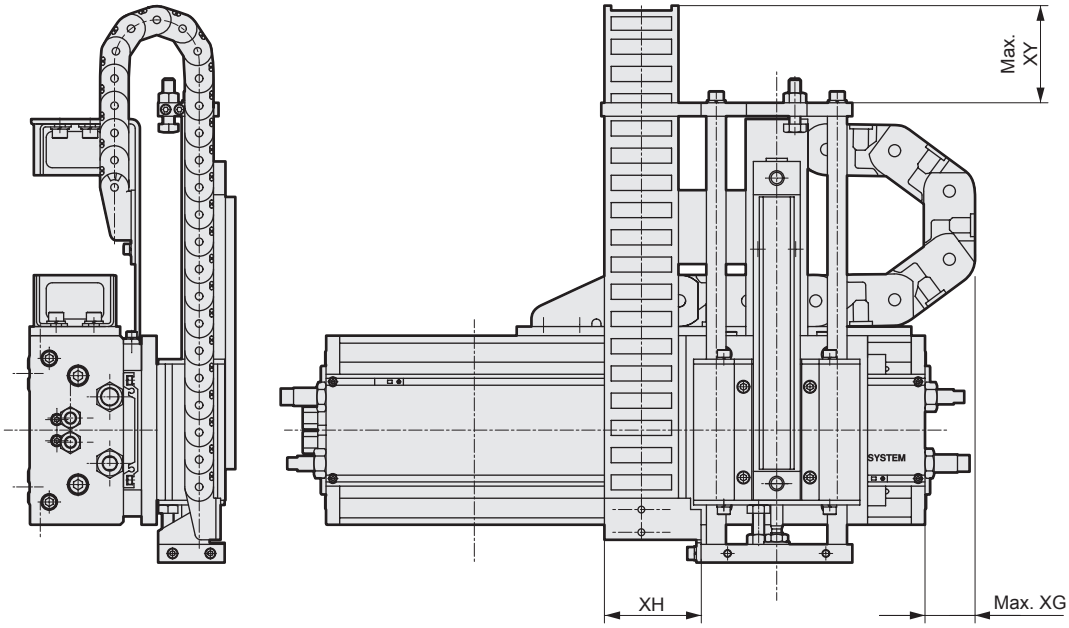

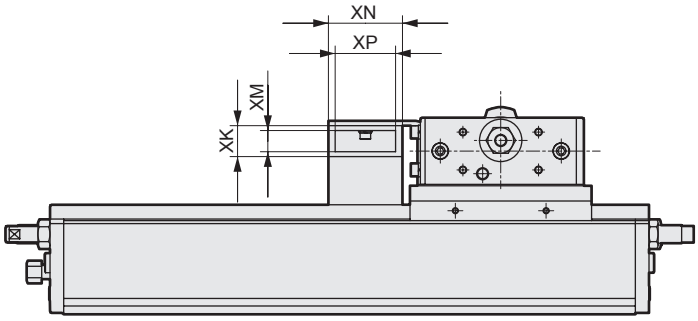

Note) Refer to NSR dimensions on pages 1426 to 1429 for dimensions (with adjustable stroke block and cableveyor, etc.) when X-axis option installed.

Model No.	TB		XH	XK	XM	XN	XP	XY	ZA	ZB	ZC	ZD	ZE	ZF	ZG	ZJ	ZK
	Std body	Long body															
HRL-1-05	25	47.5	64	19	14	49	40	150	45	12	30	100	65	25	6	25	M4
HRL-1-10	25	47.5	64	19	14	49	40	150	45	12	30	100	65	25	6	25	M4
HRL-1-15	25	52.5	64	19	14	49	40	150	45	12	30	120	75	25	6	25	M4
HRL-1-15H	25	52.5	64	19	14	49	40	150	45	12	30	120	75	25	6	25	M4
HRL-1-25	45	74	75	30	22	62	50	300	80	16	30	200	-	45	8	45	M4
HRL-1-50	25	54	75	30	22	62	50	300	80	19	30	200	-	45	9.5	45	M4

Model No.	ZL		ZM	ZN	ZQ	ZR	ZS	ZT	ZU	ZV	ZW	ZX	ZY	ZZ
	Standard body	Long body												
HRL-1-05	154	199	M5	10	6	44	M5	10	50	9.5	M5	80	23	Rc1/8
HRL-1-10	154	199	M5	10	6	44	M5	10	50	9.5	M5	80	23	Rc1/8
HRL-1-15	154	209	M5	10	6	44	M5	10	60	9.5	M5	94	23	Rc1/8
HRL-1-15H	154	209	M5	10	6	44	M5	10	60	9.5	M5	94	23	Rc1/8
HRL-1-25	252	310	M8	10	-	75	-	-	100	15	M8	150	55	Rc1/8
HRL-1-50	255	313	M8	10	-	75	-	-	100	15	M8	150	55	Rc1/4

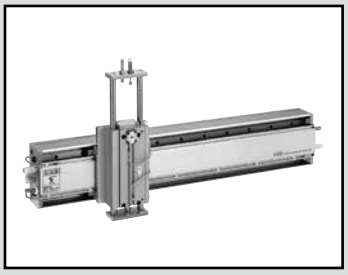

New handling system Z-axis module (STL-B)

NHS-S Series

● X-axis stroke length: 50 to 2000 mm Z-axis stroke length: 50 to 200 mm
Load capacity: 3, 7, 12, 33 kg

RoHS CAD

X-axis specifications

Combination model No.	NHS-*-10**	NHS-*-15**	NHS-*-30**	NHS-*-50**
Item	NSR-10	NSR-15	NSR-30	NSR-50
Bore size mm	ø20		ø32	ø40
Slider speed mm/s	100 to 1000			
Shock absorber	NCK-00-1.2-C	NCK-00-2.6-C	FCK-M-3-C	FCK-M-5-C
Stroke length mm	50 to 2000 (1 mm pitch)			
Max. stroke length mm	2000			
Allowable moment N·m	M1=36.4,M2=30.6,M3=34.2		M1,M3=85.9 M2=82.9	M1,M3=156.2 M2=150.7
Tilt of slider	±0.1° or less			
Piping port size	Rc1/8		Rc1/4	Rc1/2
Position detection sensor	T type proximity switch lead wire 3 m			
Max. horizontal load capacity kg	10	15	30	50
Speed controller (option)	SC3W-6-6		SC3W-8-8	SC3W-15-10
Repeatability mm	±0.02			
Weight kg	(st×0.0109)+5.5	(st×0.0109)+5.6	(st × 0.00176)+10.7	(st×0.00311)+17.9

Z-axis combination specifications

Combination model No.	NHS-*-1003			
	NHS-*-1503	NHS-*-1507	NHS-*-1512	
		NHS-*-3007	NHS-*-3012	
		NHS-*-5007	NHS-*-5012	NHS-*-5033
Z-axis model No.	STL-B-16	STL-B-25	STL-B-32	STL-B-50
Bore size mm	ø16	ø25	ø32	ø50
Speed mm/s	50 to 300			
Cushion	Lowering end shock absorber, rising end rubber cushion			
Stroke length mm	50,75,100,125,150,175,200			
Allowable moment N·m	Refer to technical data (pages 1448 and 1449)			
Piping port size	M5		Rc1/8	Rc1/4
Position detection sensor	T type proximity switch lead wire 3 m			
Max. load capacity (*1) kg	3	7	12	33
Adjustable stroke length mm	0 to -25 (lowering end)			
Speed controller (option)	SC3W-M5-6		SC3W-6-6	SC3W-8-8
Working fluid	Clean compressed air			
Working pressure MPa	0.3 (≈44 psi, 3 bar) to 0.7 (≈100 psi, 7 bar)			
Guaranteed proof pressure MPa	1.05 (≈150 psi, 10.5 bar)			
Ambient temperature °C	5 (41°F) to 60 (140°F)			
Lubrication	Refer to page 1460 for lubrication.			
Repeatability mm	±0.5			
Product weight kg	st×0.015+0.53	st×0.0229+1.16	st×0.0335+2.5	st×0.062+4.46

*1 : Load capacity varies with air pressure, speed, absorbed energy, load center of gravity, number of X-axis heads and Z-axis stroke length.

X-axis stroke length adjustment section specifications

Item	Blank	R	L	D
Adjustable stroke right mm	-15 to 0	Full stroke length	-15 to 0	Full stroke length
Adjustable stroke left mm	-15 to 0	-15 to 0	Full stroke length	Full stroke length

Z-axis shock absorber specifications

Item	STL-B-16	STL-B-25	STL-B-32	STL-B-50
Shock absorber	NCK-00-0.3	NCK-00-0.7	NCK-00-1.2	NCK-00-2.6
Max. absorbing capacity J	3	7	12	50
Absorbing stroke length mm	7	8	10	15
Max. colliding speed mm/s	1500	1500	2000	2000
Max. operating frequency cycle/min	35	30	30	25

X-axis shock absorber specifications

Item	NCK-00-1.2-C	NCK-00-2.6-C	FCK-M-3-C	FCK-M-5-C
Max. absorbing capacity J	12	26	30	26
Absorbing stroke length mm	10	15	16	25
Max. colliding speed mm/s	2000			
Max. operating frequency cycle/min	30	25	20	12

Attachment weight

Item	For NSR-10	For NSR-15	For NSR-30	For NSR-50
Attachment weight kg	0.5	0.5	1	1.4

Cableveyor specifications

Item	Cableveyor model No.	Bore size (mm)	Load capacity (kg/m)
For NHS-10, 15-B	TKP35H22-30W25R37	22×25	MAX1.6
For NHS-10, 15-W	TKP45H25-30W38R50	25×38	MAX3.0
For NHS-30-B	TKP45H25-30W58R50	25×58	MAX3.0
For NHS-50-B	TKP45H25-30W78R50	25×78	MAX3.0

Adjustable stroke block additional weight list

Model No.	Additional weight (kg)
NSR-1-10-R	0.685 Kg
NSR-1-10-L	0.685 kg
NSR-1-10-D	1.370 kg
NSR-1-15-R	0.810 Kg
NSR-1-15-L	0.810 kg
NSR-1-15-D	1.620 kg
NSR-1-30-R	1.140 kg
NSR-1-30-L	1.140 kg
NSR-1-30-D	2.280 kg
NSR-1-50-R	1.750 kg
NSR-1-50-L	1.750 kg
NSR-1-50-D	3.499 kg

Cableveyor additional weight list

Model No.	Additional weight (kg)
NHS-1-10, 15**-B	(X stroke ÷ 2 x 0.0011) + 0.482
NHS-1-10, 15**-W	(X stroke ÷ 2 x 0.0018) + 0.55
NHS-1-30**-B	(X stroke ÷ 2 x 0.0028) + 1.148
NHS-1-50**-B	(X stroke ÷ 2 x 0.0034) + 1.234

2-head specifications

Item	NHS-2-10	NHS-2-15	NHS-2-30	NHS-2-50
Max. horizontal transfer weight kg / 1 head	5	7.5	15	25
Stroke length mm	50 to 1000			
Max. stroke length mm	1800		1740	1690
Pitch between heads mm	200 to 999		260 to 999	310 to 999
Max. pitch between heads mm	999			
Product additional weight kg	(Pitch between heads × 0.0109) + 1.7		(Pitch between heads × 0.0176) + 2.79	(Pitch between heads × 0.0311) + 4.66

LCM
LCR
LCG
LCW
LCX
STM
STG
STS/STL
STR2
UCA2
ULK*
JSK/M2
JSG
JSC3/JSC4
USSD
UFCD
USC
UB
JSB3
LMB
LML
HCM
HCA
LBC
CAC4
UCAC2
CAC-N
UCAC-N
RCS2
RCC2
PCC
SHC
MCP
GLC
MFC
BBS
RRC
GRC
RV3*
NHS
HRL
LN
Hand
Chuk
MecHnd/Chuk
ShkAbs
FJ
FK
SpdContr
Ending

How to order

NHS - 2 - 1003 - 1000 - S100 - 500 - L 3 B A Q

Ⓐ X-axis head number

Ⓑ Load capacity

Ⓒ X-axis stroke length *1

Ⓓ Z-axis

Ⓔ Z-axis stroke length

Ⓕ Pitch between heads *2

Ⓖ Adjustable stroke block

Ⓗ Port position and speed controller *4

Ⓘ Cableveyor *5

Ⓙ Switch *6

Ⓚ Z-axis position locking *7

Code	Description
Ⓐ X-axis head number	
1	1 pieces
2	2 pieces

Ⓑ Load capacity (kg)

	X-axis	Z-axis
1003	10	3
1503	15	3
1507	15	7
1512	15	12
3007	30	7
3012	30	12
5007	50	7
5012	50	12
5033	50	33

Ⓒ X-axis stroke length (1 mm pitch)	
50	50
to	to
2000	2000

Ⓓ Z-axis	
S	STL-BP-16
	STL-BP-25
	STL-BP-32
	STL-BP-50

Ⓔ Z-axis stroke length (mm)	
50	50
75	75
100	100
125	125
150	150
175	175
200	200

Ⓕ Pitch between heads (1 mm pitch)

	Load capacity (kg)			
	10	**15**	**30**	**50**
200	200	200	260	310
to	to	to	to	to
999	999	999	999	999

Ⓖ Adjustable stroke block	
Blank	None
L	Left
R	Right
D	Both sides

Ⓗ Port position and speed controller	
Blank	X-axis port position L
2	X-axis port position R
3	X-axis port position L, X Z-axis with speed controller
4	X-axis port position R, X Z-axis with speed controller

Ⓘ Cableveyor	
Blank	None
B	X-axis vertical installation
W	X-axis vertical installation

Ⓙ Switch	
Blank	2-wire proximity switch, X-axis... T2H3, Z-axis... T2H3
A	3-wire proximity switch, X-axis... T3H3, Z-axis... T3H3

Ⓚ Z-axis position locking	
Blank	Without
Q	With

⚠ Precautions for model No. selection

*1 If X-axis stroke length of NSR-30, 50 and NSR-10, 15 is 1001 mm and over, front cover uses tension method.
*2 Can be selected for two heads only.
*3 Select so that the pitch between heads and stroke lengths total 2000 mm or less.
*4 If port position R is selected, mounting orientation of the cableveyor is reversed. (Exit is port side)

Port position L direction

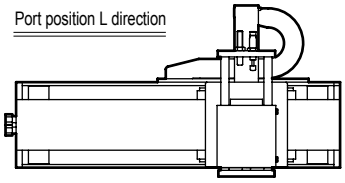

Port position R direction

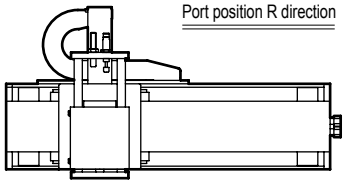

*5 Refer to table below for the cableveyor capacity.

Item	B	W
For NHS-*-10** -15**	22×25	25×38
For NHS-*-30**	25×58	-
For NHS-*-50**	25×78	-

*6 2 switches are installed per X-axis and Z-axis.
*7 Position locking of STL-BP-16 is not available.
*8 Consult with CKD for specifications not indicated at right.

Switch specifications (T Series)

Item	Proximity 2-wire	Proximity 3-wire
	T2H3	T3H3
Applications	Dedicated for programmable controller	For programmable controller, relay
Output method	-	NPN output
Power supply voltage	-	10 to 28 VDC
Load voltage	10 to 30 VDC	30 VDC or less
Load current	5 to 20 mA (*1)	100 mA or less
Current consumption	-	10 mA or less at 24 VDC (when ON)
Internal voltage drop	4V or less	0.5V or less
Indicator lamp	LED (Lit when ON)	
Leakage current	1 mA or less	10 μA or less
Lead wire (standard)	3 m (oil resistant vinyl cabtyre cable 2-conductor 0.2 m^2)	3 m (oil resistant vinyl cabtyre cable 3-conductor 0.2 m^2)
Max. shock resistance	980 m/s^2	
Insulation resistance	20 MΩ and over with 500 VDC megger	
Withstand voltage	No failure after 1 minute of 1,000 VAC application.	
Ambient temperature	-10 to +60°C	
Degree of protection	IEC standards IP67, JIS C0920 (dust proof), oil resistance	
Weight	49 g	

*1 : Max. load current: 20 mA at 25˚C. The current is lower than 20 mA if the operating ambient temperature around the switch is higher than 25˚C. (5 to 10 mA at 60°C)

Dimensions

● T*H Series (axial lead wire)

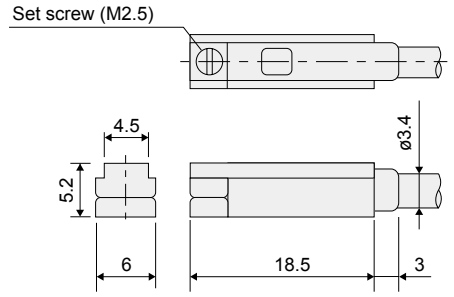

● T2H

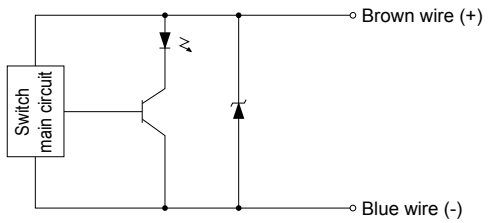

● T3H

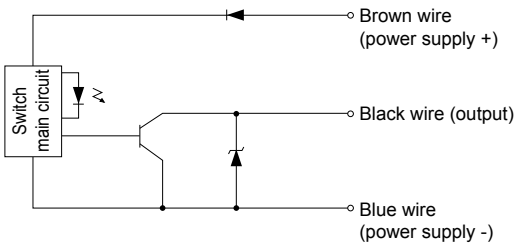

LCM
LCR
LCG
LCW
LCX
STM
STG
STS/STL
STR2
UCA2
ULK*
JSK/M2
JSG
JSC3/JSC4
USSD
UFCD
USC
UB
JSB3
LMB
LML
HCM
HCA
LBC
CAC4
UCAC2
CAC-N
UCAC-N
RCS2
RCC2
PCC
SHC
MCP
GLC
MFC
BBS
RRC
GRC
RV3*
NHS
HRL
LN
Hand
Chuk
MecHnd/Chuk
ShkAbs
FJ
FK
SpdContr
Ending

Dimensions

● Basic

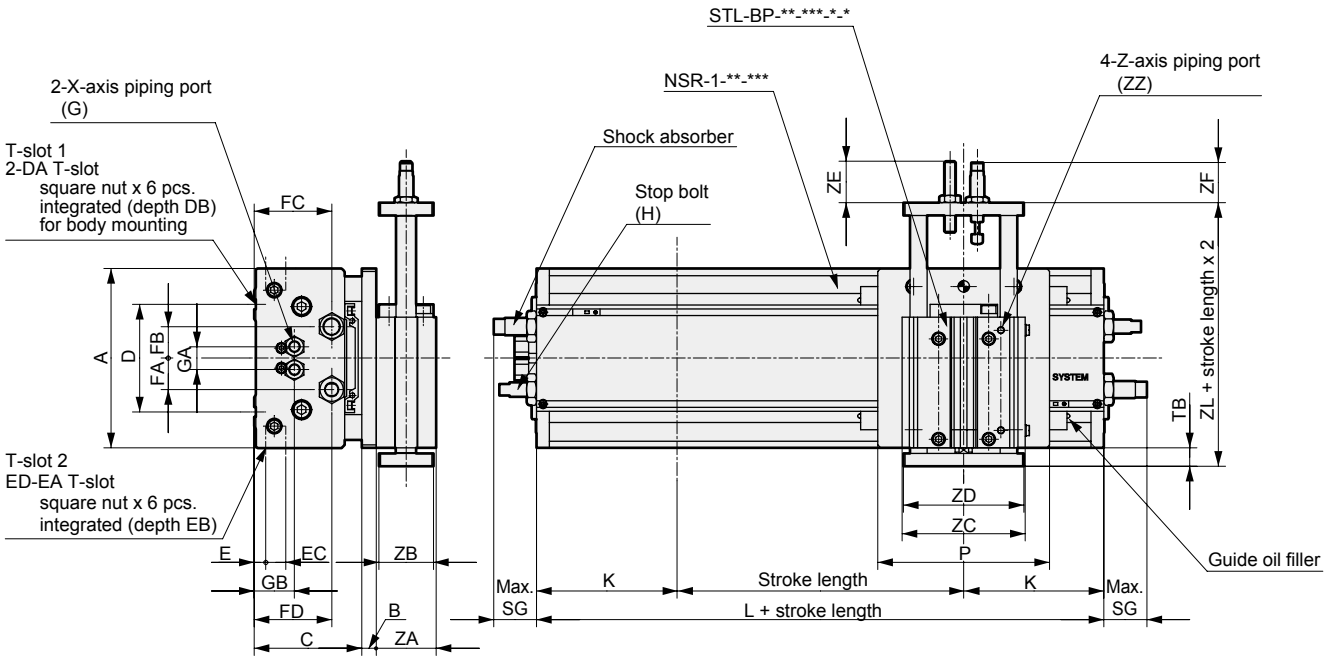

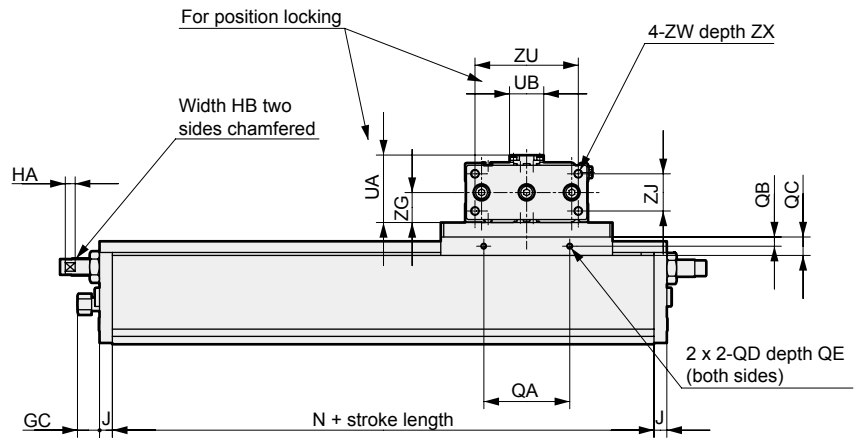

Note) Refer to page 1426
for detailed T-slot section dimensions.

Model No.	A	B	C	D	DA	DB	E	EA	EB	EC	ED	FA	FB	FC	FD
NHS-*-10**-S	125	10	75	75	M6	11	8	M4	8	-	2	22	22	54	54
NHS-*-15**-S	125	10	75	75	M6	11	8	M4	8	-	2	22	22	54	54
NHS-*-30**-S	165	15	105	110	M10	18	11.5	M5	10.5	14	4	25	24	78	82
NHS-*-50**-S	200	15	120	130	M12	21	11.5	M6	13	16	4	30	30	88.5	88.5

Model No.	SG	TB
NHS-*-10**-S	30	13
NHS-*-15**-S	56	13
NHS-*-30**-S	66	13
NHS-*-50**-S	101.5	13

Model No.	UA	UB	UL	ZA	ZB	ZC	ZD	ZE	ZF	ZG	ZJ	ZL	ZU	ZW	ZX	ZZ
STL-BP-16	-	-	-	30	28	64	62	30.5	25.5	15	18	73.5	52	M5	through	M5
STL-BP-25	47	24	109	42	38	86	84	29	28	21	26	84	72	M6	through	M5
STL-BP-32	54	32	129.5	47	45	111	109	45.5	30.5	23.5	29	104.5	93	M8	through	Rc1/8
STL-BP-50	73.5	43	174	66	64	147	145	49	50	33	44	124	125	M10	through	Rc1/4

LCM
LCR
LCG
LCW
LCX
STM
STG
STS/STL
STR2
UCA2
ULK*
JSK/M2
JSG
JSC3/JSC4
USSD
UFCD
USC
UB
JSB3
LMB
LML
HCM
HCA
LBC
CAC4
UCAC2
CAC-N
UCAC-N
RCS2
RCC2
PCC
SHC
MCP
GLC
MFC
BBS
RRC
GRC
RV3*
NHS
HRL
LN
Hand
Chuk
MecHnd/Chuk
ShkAbs
FJ
FK
SpdContr
Ending

● Position locking

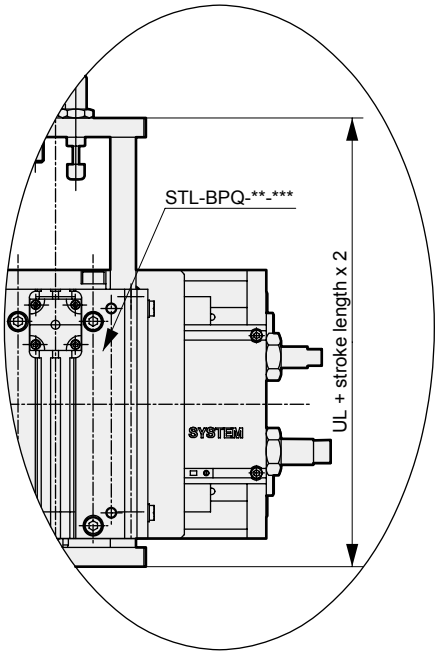

Note) Refer to NSR dimensions on pages 1426 to 1429 for dimensions (with adjustable stroke block and cableveyor, etc.) when X-axis option installed.

G	GA	GB	GC	H	HA	HB	J	K	L	N	P	QA	QB	QC	QD	QE
Rc1/8	16	28	16	M10×1.25	7	8	9	98	196	178	120	60	6.5	13	M4	10
Rc1/8	16	28	16	M10×1.25	7	8	9	98	196	178	120	60	6.5	13	M4	10
Rc1/4	27	37.5	8.5	M12×1.25	9	10	16	133	266	234	150	70	8	17	M5	12
Rc1/2	35	46.5	5.5	M12×1.25	9	10	16	143	286	254	177	70	9.5	20	M6	14

LCM
LCR
LCG
LCW
LCX
STM
STG
STS/STL
STR2
UCA2
ULK*
JSK/M2
JSG
JSC3/JSC4
USSD
UFCD
USC
UB
JSB3
LMB
LML
HCM
HCA
LBC
CAC4
UCAC2
CAC-N
UCAC-N
RCS2
RCC2
PCC
SHC
MCP
GLC
MFC
BBS
RRC
GRC
RV3*
NHS
HRL
LN
Hand
Chuk
MecHnd/Chuk
ShkAbs
FJ
FK
SpdContr
Ending

Q A

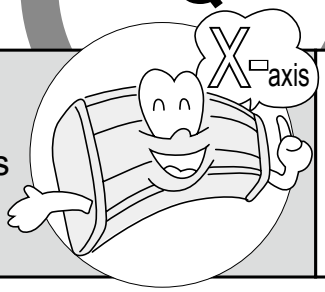

Q1
What are the features of X-axis module?

The first feature is the large moment load. A THK LM guide is used with two rails to withstand high moment load. The second feature is ample options. Full stroke length adjustment (both sides or one side)
With cableveyor (horizontal mounting or vertical mounting) and other options to match piping port positions, etc., are selectable.

Q2
Is the X-axis module load capacity up to max. 50 kg in the vertical direction?

The max. 50 kg load capacity is for horizontal transfer. For vertical, the load is 12 kg.
* Select vertical transfer according to the inner cylinder's thrust.

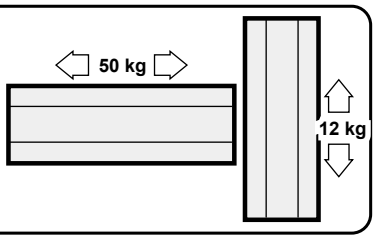

Q3
Can the reed X-axis module sensor be used?

The X-axis module sensor is mounted in the T-slot on the front cover. As a result, the distance to the magnet with slider is limited, and a reed switch cannot be used. T2 or T3 cylinder switch can be installed. When using a PLC with which the leakage current is a concern, use the T3 type (leakage current of 10 μA or less).

Q4
How far can the X-axis module's stroke be adjusted?

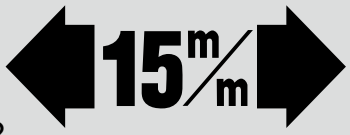

With the standard, the stroke can be reduced up to 15 mm each from left and right. If larger stroke adjustment is required, select the full stroke length adjustment option. Note that the stroke cannot be increased past the standard stroke length with any type.

Q5
What is different in the X-axis module when the stroke is larger than the standard stroke length (1000 mm)?

The NSR-10 and 15 have a tension mechanism on the front cover.
The max. stroke length is 2000 mm.
No changes are made with NSR-30 and 50.

LCM
LCR
LCG
LCW
LCX
STM
STG
STS/STL
STR2
UCA2
ULK*
JSK/M2
JSG
JSC3/JSC4
USSD
UFCD
USC
UB
JSB3
LMB
LML
HCM
HCA
LBC
CAC4
UCAC2
CAC-N
UCAC-N
RCS2
RCC2
PCC
SHC
MCP
GLC
MFC
BBS
RRC
GRC
RV3*
NHS
HRL
LN
Hand
Chuk
MecHnd/Chuk
ShkAbs
FJ
FK
SpdContr
Ending

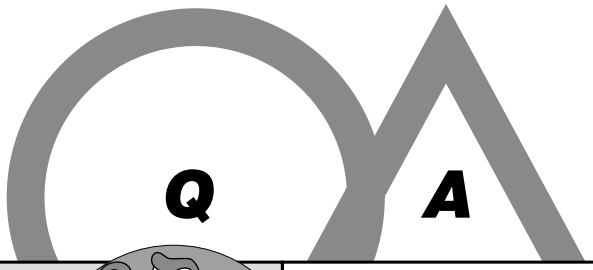

Q6
What is the best way to select Z-axis modules?

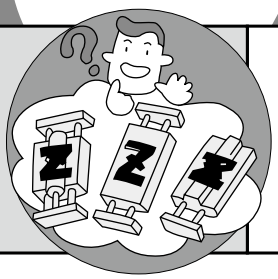

Select the X-axis module according to the load capacity and required accuracy.
Select HRL (NHS-H) for medium accuracy and high load.
Select STL (NHS-S) for low accuracy and low cost.

Q7
Does the Z-axis module have a position locking mechanism?

Provided with all models as an option, excluding STL-BP-16.

Q8
Are X- and Z-axis module valves installed?

Valves are not installed with modules. Must be installed by the user.

Q9
Is a cableveyor provided on the Z-axis module?

A cableveyor can be installed on HRL.

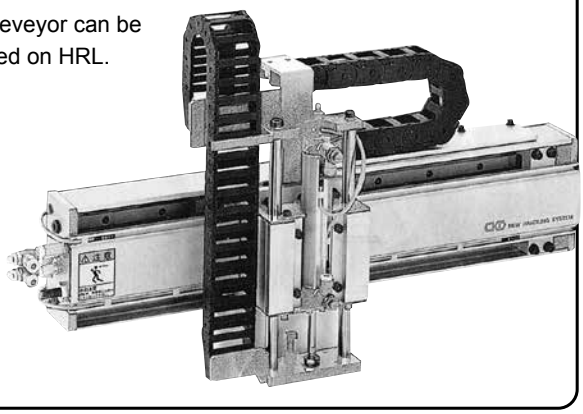

LCM
LCR
LCG
LCW
LCX
STM
STG
STS/STL
STR2
UCA2
ULK*
JSK/M2
JSG
JSC3/JSC4
USSD
UFCD
USC
UB
JSB3
LMB
LML
HCM
HCA
LBC
CAC4
UCAC2
CAC-N
UCAC-N
RCS2
RCC2
PCC
SHC
MCP
GLC
MFC
BBS
RRC
GRC
RV3*
NHS
HRL
LN
Hand
Chuk
MecHnd/Chuk
ShkAbs
FJ
FK
SpdContr
Ending

Cylinder (NSR) used for X-axis

Load capacity and moment load

● **Vertical load: W**

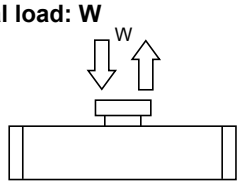

● **Bending moment: M_1**

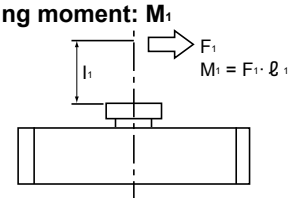

● **Radial moment: M_2**

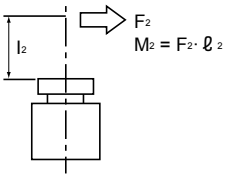

● **Torsion moment: M_3**

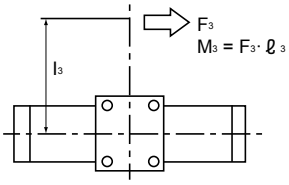

● Use the load capacity and moment within the range of the following graph. Specifications exceeding the graph may cause damage. Check if total of moment is 1.0 or less with the following formula.

● Formula

$$\frac{M1}{M1max} + \frac{M2}{M2max} + \frac{M3}{M3max} \leq 1.0$$

● Load allowable

Model No.	Bending moment M1max	Radial moment M2max	Torsion moment M3max
NSR-10	36.4 N·m	30.6 N·m	34.2 N·m
NSR-15	36.4 N·m	30.6 N·m	34.2 N·m
NSR-30	85.9 N·m	82.9 N·m	85.9 N·m
NSR-50	156.2 N·m	150.7 N·m	156.2 N·m

X-axis speed-load capacity diagram

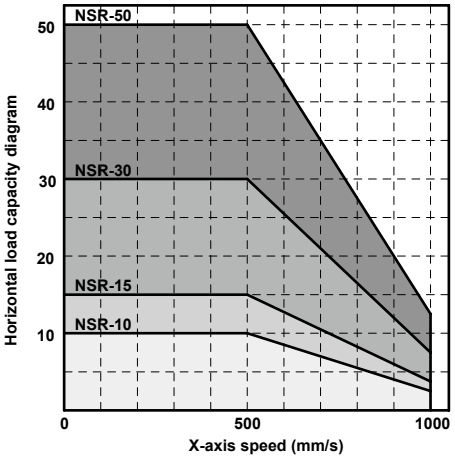

Cableveyor hose weight

● Use the cableveyor hose weight at the weight that is equal to or less than the weight indicated in the following graph. Volume ratio is to be 50% or less. If capacity is not satisfied, contact CKD.

Cableveyor performance diagram

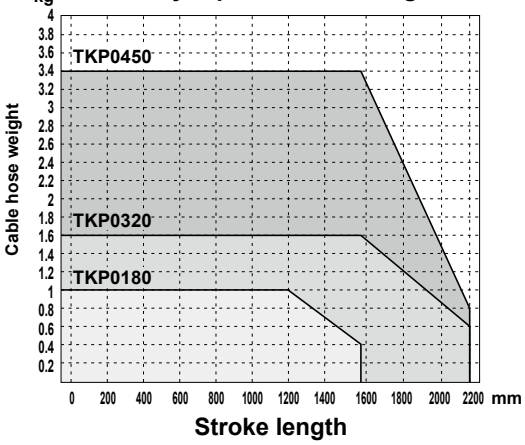

Adjustable stroke block

● Adjustable stroke block can be moved by loosening fixing bolt.

● Tighten adjustable stroke block at required position with torque on following table after movement. If tightened with torque other than above, adjustable stroke block may be shifted.

Model No.	Tightening torque
NSR-10,15	520 to 560 N.cm
NSR-30	980 to 1200 N.cm
NSR-50	2800 to 2950 N.cm

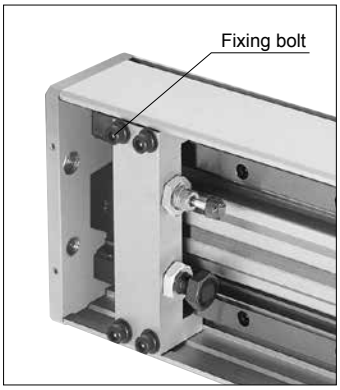

LCM
LCR
LCG
LCW
LCX
STM
STG
STS/STL
STR2
UCA2
ULK*
JSK/M2
JSG
JSC3/JSC4
USSD
UFCD
USC
UB
JSB3
LMB
LML
HCM
HCA
LBC
CAC4
UCAC2
CAC-N
UCAC-N
RCS2
RCC2
PCC
SHC
MCP
GLC
MFC
BBS
RRC
GRC
RV3*
NHS
HRL
LN
Hand
Chuk
MecHnd/Chuk
ShkAbs
FJ
FK
SpdContr
Ending

Cylinder used for Z-axis

A HRL type allowable load

● Use HRL with the following allowable eccentric load or less.
HRL-1□-05/10/15/15H/25/50

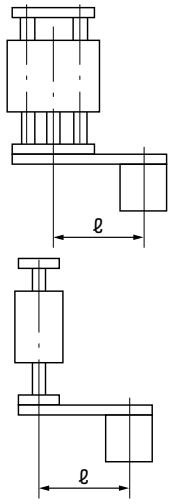

● HRL-1 (basic)

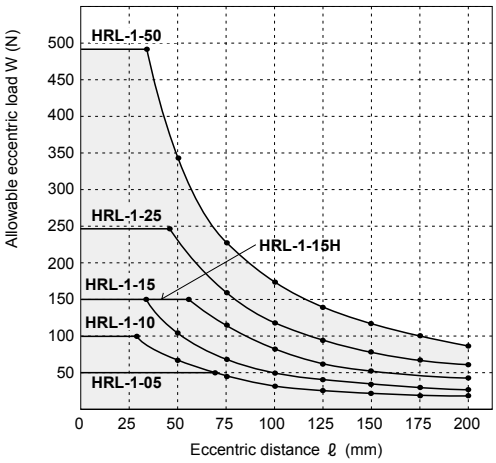

● HRL-1L (long body)

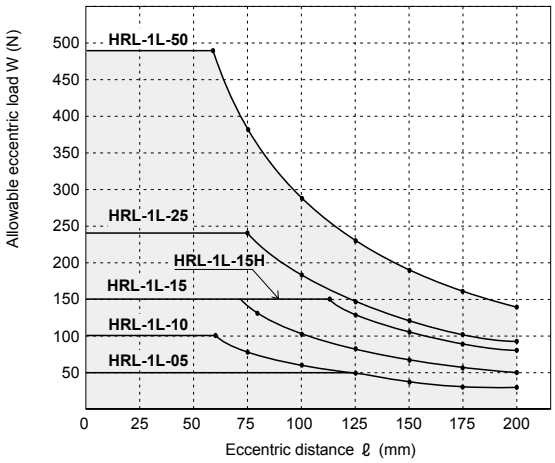

B STL type allowable lateral load/allowable torque/non-rotating accuracy

● Allowable lateral load

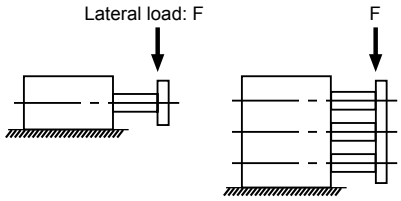

Unit: N

Bore size mm	Model No.	Stroke length (mm)						
		50	75	100	125	150	175	200
ø16	STL-B-16	34	25	19	16	13	11	10
ø25	STL-B-25	68	50	39	32	27	23	20
ø32	STL-B-32	100	76	62	51	44	38	34
ø50	STL-B-50	161	126	103	87	75	66	58

● Allowable torque

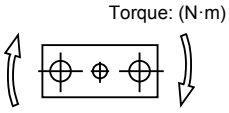

Unit: N·m

Bore size mm	Model No.	Stroke length (mm)						
		50	75	100	125	150	175	200
ø16	STL-B-16	0.39	0.29	0.22	0.18	0.15	0.13	0.12
ø25	STL-B-25	1.07	0.79	0.61	0.50	0.43	0.36	0.32
ø32	STL-B-32	2.03	1.54	1.26	1.03	0.89	0.77	0.69
ø50	STL-B-50	4.43	3.47	2.83	2.39	2.06	1.82	1.60

● Non-rotating accuracy

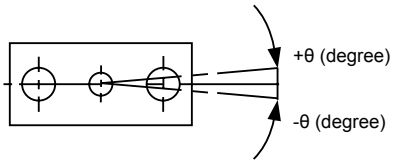

Bore size mm	Non-rotating accuracy θ (degrees)
ø16	±0.06
ø25	±0.08
ø32	±0.04
ø50	±0.03

(Default at PULL) Note: Excluding sag of guide rod

● Deflection

(Excluding sag of guide rod)

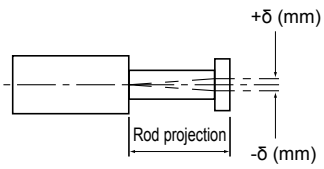

● ø16 ball bearing

STL-B

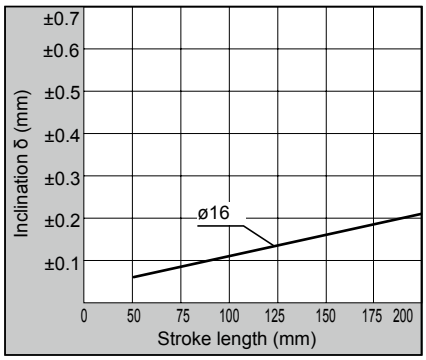

● ø25, ø32 to ø50 ball bearing

STL-B

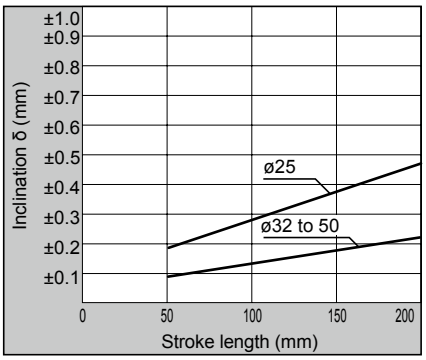

LCM
LCR
LCG
LCW
LCX
STM
STG
STS/STL
STR2
UCA2
ULK*
JSK/M2
JSG
JSC3/JSC4
USSD
UFCD
USC
UB
JSB3
LMB
LML
HCM
HCA
LBC
CAC4
UCAC2
CAC-N
UCAC-N
RCS2
RCC2
PCC
SHC
MCP
GLC
MFC
BBS
RRC
GRC
RV3*
NHS
HRL
LN
Hand
Chuk
MecHnd/Chuk
ShkAbs
FJ
FK
SpdContr
Ending

Accessory frame combination dimensions NHS-*-10**, 15** dedicated

● NHS-UA-401-length

300/400/500/600

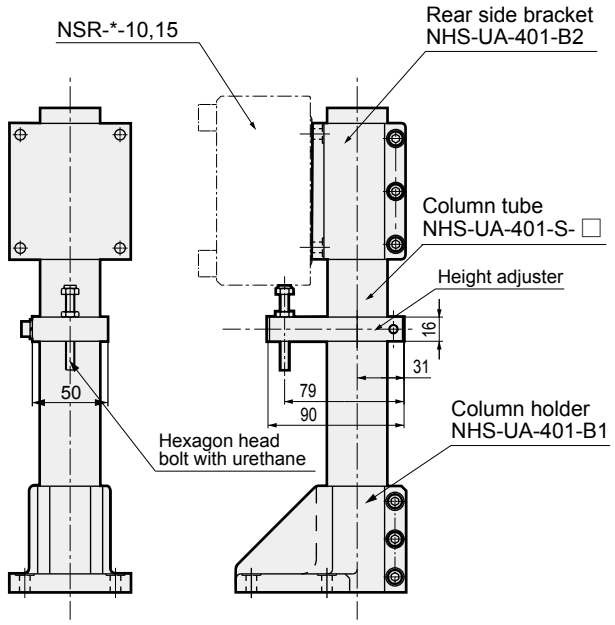

● With height adjuster
● Included product
NHS mounting bolt set
mounting bolt M6 x 20 .....4 pcs.
spring washer nominal 6 .....4 pcs.
flat washer nominal 6 .....4 pcs.
● Provided with 1 pc./1 set for combined model No.

Column tube

● NHS-UA-401-S-length

300/400/500/600

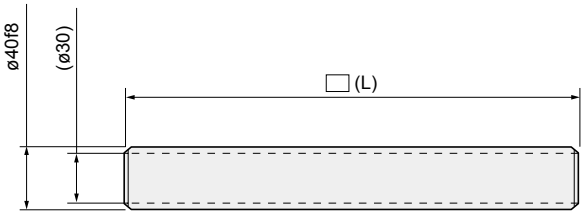

Material: Steel pipe

Rear side bracket

● NHS-UA-401-B2

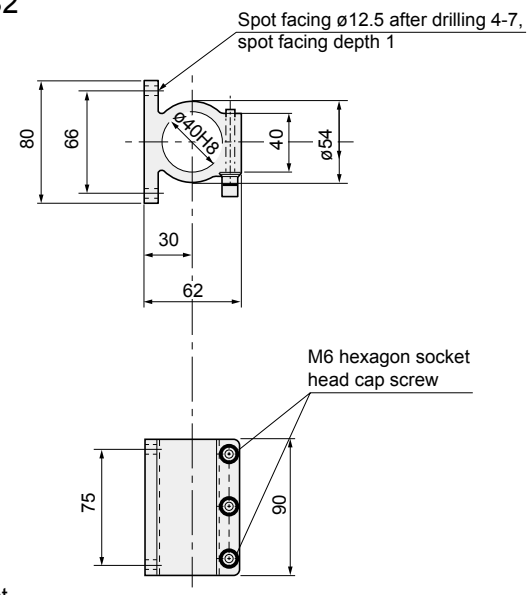

● Included product
NHS mounting bolt set
mounting bolt M6 x 20 .....4 pcs.
spring washer nominal 6 ...4 pcs.
flat washer nominal 6 .....4 pcs.

Material: Aluminum alloy casting

Column holder

● NHS-UA-401-B1

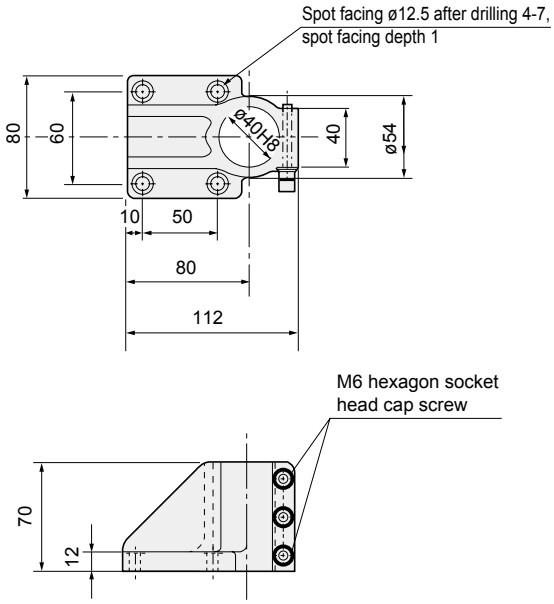

Material: Cast iron

HRL

Hybrid robot

Modular unit

Overview

A high-rigidity guide rod is integrated into the super micro cylinder, creating a single axis unit with a long stroke transport function.

Features

Slim with high rigidity.

Ball bushing is used for bearing section.

Position detection switch, shock absorber and speed controller are equipped as standard.

A position locking mechanism can be mounted if required by the application.

CONTENTS

● HRL-1 (single axis unit) 1452

⚠ Safety precautions 1460

Model No.	Load capacity (kg)	Basic cylinder	Stroke (mm)		Page
			Basic body shape	Long body shape	
HRL-1*	5/10/15/25/50/65	SCM	50/75/100/125/ 150/200/250/300	350/400/450/ 500/550/600	1452

The cylinder switches T2YH, T2YV, T3YH, and T3YV are scheduled for end of production at the end of December 2023.

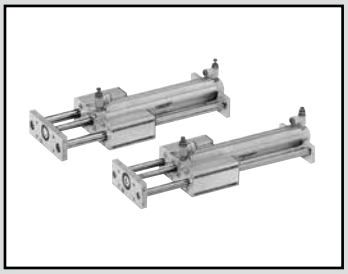

Hybrid robot
Single axis unit

HRL-1 Series

● Load capacity: 5/10/15/25/50/65 kg

RoHS CAD

Specifications

Item		HRL-1□-05	HRL-1□-10	HRL-1□-15	HRL-1□-15H	HRL-1□-25	HRL-1□-50	HRL-1□-65
Load capacity (vertical) *1 kg		5	10	15		25	50	65
Basic cylinder		SCM-00-20D	SCM-00-25D	SCM-00-32D		SCM-00-40D	SCM-00-50D	SCM-00-63B
Bore size mm		20	25	32		40	50	63
Guide rod diameter mm		13	13	16	20	20	25	30
Speed mm/s		50 to 500						
Working pressure MPa		0.3 (≈44 psi, 3 bar) to 0.7 (≈100 psi, 7 bar)						
Adjustable stroke range *2 mm		0 to -10 mm (push)						
Shock absorber *3		NCK-00-0.7		NCK-00-1.2		NCK-00-12		
Product weight kg	Basic	2 + (0.0033 x stroke length)	2.1 + (0.0037 × stroke length)	2.8 + (0.0051 × stroke length)	2.9 + (0.0069 × stroke length)	10.8 + (0.0081 × stroke length)	11.9 + (0.0122 × stroke length)	13.3 + (0.02 × stroke length)
	Long body	2.3 + (0.0033 × stroke length)	2.4 + (0.0037 × stroke length)	3.1 + (0.0051 × stroke length)	3.2 + (0.0069 × stroke length)	12.5 + (0.0081 × stroke length)	13.6 + (0.0122 × stroke length)	15+(0.02 x stroke length)
Movable part weight kg	Basic	0.9 + (0.0025 × stroke length)	0.9 + (0.0027 × stroke length)	1.3 + (0.0041 × stroke length)	1.6 + (0.0059 × stroke length)	4.1 + (0.0066 × stroke length)	5.2 + (0.0102 × stroke length)	6.1 + (0.0137 × stroke length)
	Long body	1.0 + (0.0025 × stroke length)	1.0 + (0.0027 × stroke length)	1.5 + (0.0041 × stroke length)	1.8 + (0.0059 × stroke length)	4.4 + (0.0066 × stroke length)	5.7 + (0.0102 × stroke length)	6.8 + (0.0137 × stroke length)
Speed controller *4		SC3W-6-6				SC3W-6-8	SC3W-8-8	

*1 : Load capacity varies with air pressure, speed and absorption energy. (Value is for reference.)
*2 : Adjustable stroke is not available for pulled side.
*3 : The shock absorber is built into the body. Use within the following allowable shock absorber tolerance values at the working speed and working air pressure.
· HRL-1□F-05/10/15/15H Pull... 70% or less
· HRL-1□F-25/50/65 Pull... 65% or less
· Other than the above: 74% or less
*4 : The speed controller is included.

Switch specifications

● 1-color/2-color display/for AC magnetic field proof

Item	Proximity 2-wire			Proximity 3-wire			Reed 2-wire				Proximity 2-wire
	T2H/T2V	T2JH/T2JV	T2YH/T2YV	T3H/T3V	T3PH/T3PV	T3YH/T3YV	T0H/T0V		T5H/T5V		T2YD (*4) T2YDT
Applications	Dedicated for programmable controller			For programmable controller, relay			For programmable controller, relay		For programmable controller, relay, IC circuit (no indicator lamp), serial connection		For programmable controller
Output method	-			NPN output	PNP output	NPN output	-				-
Pwr. supp. V.	-			10 to 28 VDC			-				-
Load voltage	10 to 30 VDC			30 VDC or less			12/24 VDC	110 VAC	5/12/24 VDC	110 VAC	24 VDC ±10%
Load current	5 to 20 mA (*3)			100 mA or less		50 mA or less	5 to 50 mA	7 to 20 mA	50 mA or less	20 mA or less	5 to 20 mA
Indicator lamp	LED (Lit when ON)		Red/green LED (Lit when ON)	LED (Lit when ON)	Yellow LED (Lit when ON)	Red/green LED (Lit when ON)	LED (Lit when ON)		-		Red/green LED (Lit when ON)
Leakage current	1 mA or less			10 μA or less			0 mA				1 mA or less
Weight	1 m:18 g 3 m:49 g 5 m:80 g		1 m:33 g 3 m:87 g 5 m:142 g	1 m:18 g 3 m:49 g 5 m:80 g		1 m:33 g 3 m:87 g 5 m:142 g	1 m:18 g 3 m:49 g 5 m:80 g				1 m:61 g 3 m:166 g 5 m:272 g

*1 : Refer to Ending Page 1 for detailed switch specifications and dimensions.
*2 : Switches other than the above models, such as switches with connectors, are also available. Refer to Ending Page 1.
*3 : The max. load current is 20 mA at 25°C. The current is lower than 20 mA if the operating ambient temperature around the switch is higher than 25°C. (5 to 10 mA at 60°C)
*4 : AC magnetic field proof switch (T2YD/T2YDT) cannot be used in DC magnetic fields.

LCM
LCR
LCG
LCW
LCX
STM
STG
STS/STL
STR2
UCA2
ULK*
JSK/M2
JSG
JSC3/JSC4
USSD
UFCD
USC
UB
JSB3
LMB
LML
HCM
HCA
LBC
CAC4
UCAC2
CAC-N
UCAC-N
RCS2
RCC2
PCC
SHC
MCP
GLC
MFC
BBS
RRC
GRC
RV3*
NHS
HRL
LN
Hand
Chuk
MecHnd/Chuk
ShkAbs
FJ
FK
SpdContr
Ending

How to order

Without switch *1

HRL-1 L - 05 - 350 - Q

With switch

HRL-1 L - 05 - 350 - Q - T0H3 - R

Ⓐ Basic shape

Ⓑ Load capacity

Ⓒ Stroke length

Ⓓ Position locking mechanism *2

Ⓔ Switch model No.
* indicates the lead wire length.

Ⓕ Switch quantity

Code	Description
Ⓐ Basic shape	
Blank	Basic
L	Long body
F	Basic front flange
LF	Long body front flange

Ⓑ Load capacity (vertical)	
05	5 kg
10	10 kg
15	15 kg
15H	
25	25 kg
50	50 kg
65	65 kg

Ⓒ Stroke length (mm)
[Basic body shape]
50, 75, 100, 125, 150, 200, 250, 300
[Long body shape]
350, 400, 450, 500, 550, 600

Ⓓ Position locking mechanism	
Blank	Without
Q	With

Ⓔ Switch model No.

Axial lead wire	Radial lead wire	Contact	Voltage AC	Voltage DC	Display	Lead wire
T0H*	**T0V***	Reed	●	●	1-color display	2-wire
T5H*	**T5V***	Reed	●	●	Without indicator lamp	2-wire
T2H*	**T2V***	Proximity		●	1-color display	2-wire
T3H*	**T3V***	Proximity		●	1-color display	3-wire
T3PH*	**T3PV***	Proximity		●	1-color display	3-wire
T2YH*	**T2YV***	Proximity		●	2-color display	2-wire
T3YH*	**T3YV***	Proximity		●	2-color display	3-wire
T2YD*	**-**	Proximity		●	2-color display AC magnetic field	2-wire
T2YDT*	**-**	Proximity		●	2-color display AC magnetic field	2-wire
T2JH*	**T2JV***	Proximity		●	1-color display off-delay	2-wire

*** Lead wire length**	
Blank	1 m (standard)
3	3 m (option)
5	5 m (option)

Ⓕ Switch quantity	
R	1 on rod side
H	1 on head side
D	2
T	3

⚠ Precautions for model No. selection

*1 : When without switch is selected, with/without cylinder switch rail depends on whether position locking is selected.
Without position locking mechanism: Without switch rail
With position locking mechanism: With switch rail

*2 : The position locking mechanism can be installed on the head side of the cylinder only.

[Example of model No.]

HRL-1L-05-350-Q-T0H3-R

Model: Hybrid robot HRL-1 Series

Ⓐ Basic shape : Long body
Ⓑ Load capacity : 5 kg
Ⓒ Stroke length : 350 mm
Ⓓ Position locking mechanism : With
Ⓔ Switch model No. : Reed T0H switch, lead wire 3 m
Ⓕ Switch quantity : 1 on rod side

Specifications for rechargeable battery (Catalog No. CC-1226A)

● Design compatible with rechargeable battery manufacturing process.

HRL-1 - ··· - P4*

LCM
LCR
LCG
LCW
LCX
STM
STG
STS/STL
STR2
UCA2
ULK*
JSK/M2
JSG
JSC3/JSC4
USSD
UFCD
USC
UB
JSB3
LMB
LML
HCM
HCA
LBC
CAC4
UCAC2
CAC-N
UCAC-N
RCS2
RCC2
PCC
SHC
MCP
GLC
MFC
BBS
RRC
GRC
RV3*
NHS
HRL
LN
Hand
Chuk
MecHnd/Chuk
ShkAbs
FJ
FK
SpdContr
Ending

Dimensions

● HRL-1-05 to 15H (basic body)

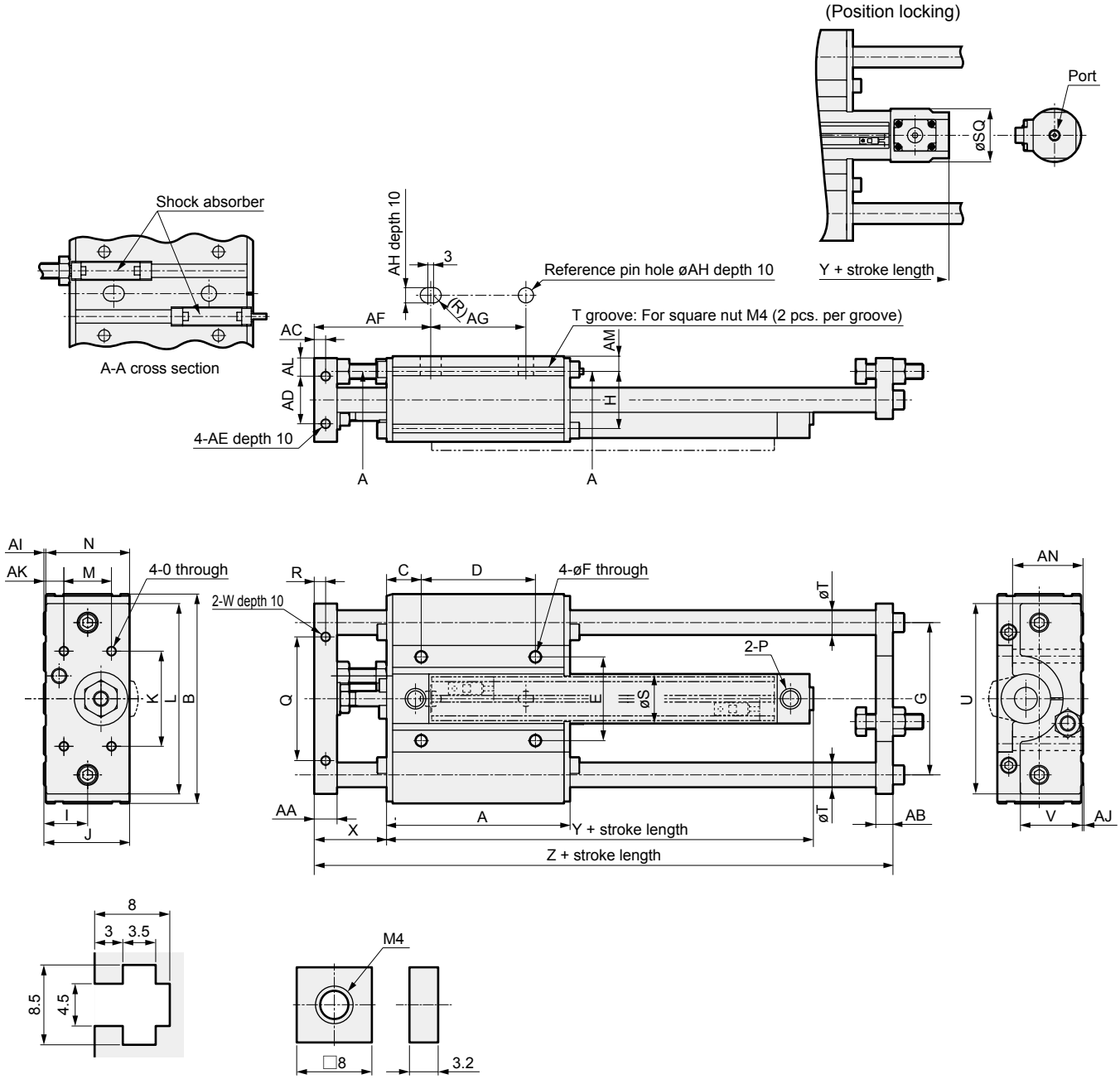

T groove section dimension

Integrated square nut dimension

Model No.	Stroke range (mm)	A	AA	AB	AC	AD	AE	AF	AG	AH	AI	AJ	AK	AL	AM	AN	B	C	D	E	F
HRL-1-05	50,75	96.4	12	9	6	25	M5	61.2	50	$8^{+0.03}_{0}$	1	1	10.5	9.5	8	37	110	18.2	60	44	6
-10	100,125																				
-15	150,200																130			52	7
-15H	250,300																				

Model No.	G	H	I	J	K	L	M	N	O	P	Q	R	S	SQ	T	U	V	W	X	Y No position locking	Y With position locking	Z
HRL-1-05	80	30	23	45	50	100	25	44	M5	Rc1/8	65	6	26	30	13	100	32	M5	38	74.2	94.2	154
-10													31	35								
-15	94				60	120					75		38	38.1	16	120	38			76.2	96.2	
-15H															20							

LCM
LCR
LCG
LCW
LCX
STM
STG
STS/STL
STR2
UCA2
ULK*
JSK/M2
JSG
JSC3/JSC4
USSD
UFCD
USC
UB
JSB3
LMB
LML
HCM
HCA
LBC
CAC4
UCAC2
CAC-N
UCAC-N
RCS2
RCC2
PCC
SHC
MCP
GLC
MFC
BBS
RRC
GRC
RV3*
NHS
HRL
LN
Hand
Chuk
MecHnd/Chuk
ShkAbs
FJ
FK
SpdContr
Ending

Dimensions

● HRL-1L-05 to 15H (long body)

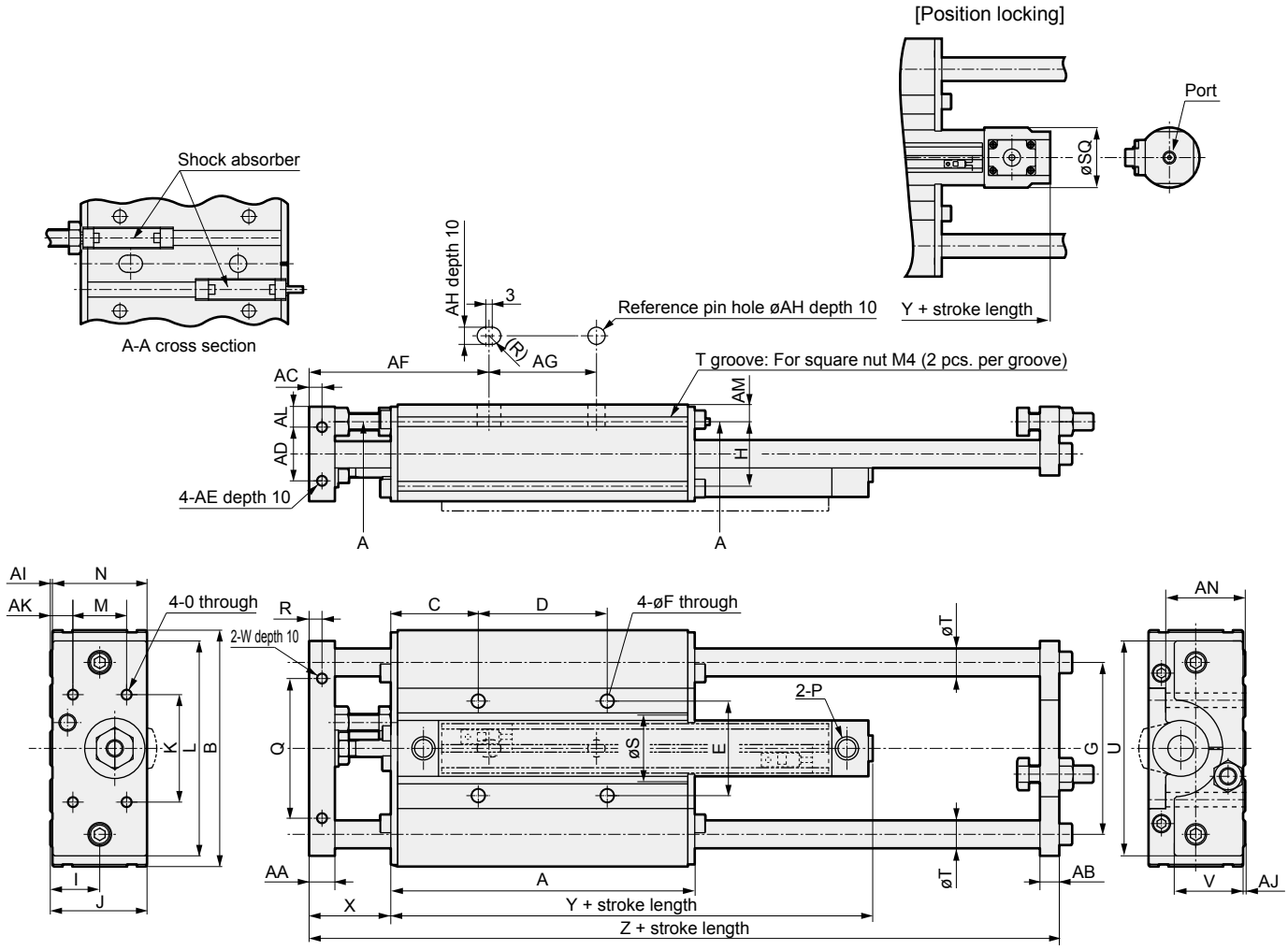

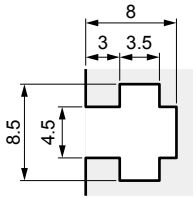

T groove section dimension

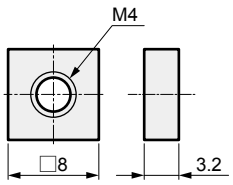

Integrated square nut dimension

Model No.	Stroke range (mm)	A	AA	AB	AC	AD	AE	AF	AG	AH	AI	AJ	AK	AL	AM	AN	B	C	D	E	F
HRL-1L-05	350,400	141.4	12	9	6	25	M5	83.7	50	$8^{+0.03}_{0}$	1	1	10.5	9.5	8	37	110	40.7	60	44	6
-10																					
-15	450,500	151.4						88.7									130	45.7		52	7
-15H	550,600																				

Model No.	G	H	I	J	K	L	M	N	O	P	Q	R	S	SQ	T	U	V	W	X	Y No position locking	Y With position locking	Z
HRL-1L-05	80	30	23	45	50	100	25	44	M5	Rc1/8	65	6	26	30	13	100	32	M5	38	74.2	94.2	199
-10													31	35								
-15	94				60	120					75		38	38.1	16	120	38			76.2	96.2	209
-15H															20							

LCM
LCR
LCG
LCW
LCX
STM
STG
STS/STL
STR2
UCA2
ULK*
JSK/M2
JSG
JSC3/JSC4
USSD
UFCD
USC
UB
JSB3
LMB
LML
HCM
HCA
LBC
CAC4
UCAC2
CAC-N
UCAC-N
RCS2
RCC2
PCC
SHC
MCP
GLC
MFC
BBS
RRC
GRC
RV3*
NHS
HRL
LN
Hand
Chuk
MecHnd/Chuk
ShkAbs
FJ
FK
SpdContr
Ending

Dimensions CAD

● HRL-1-25 to 65 (basic body)

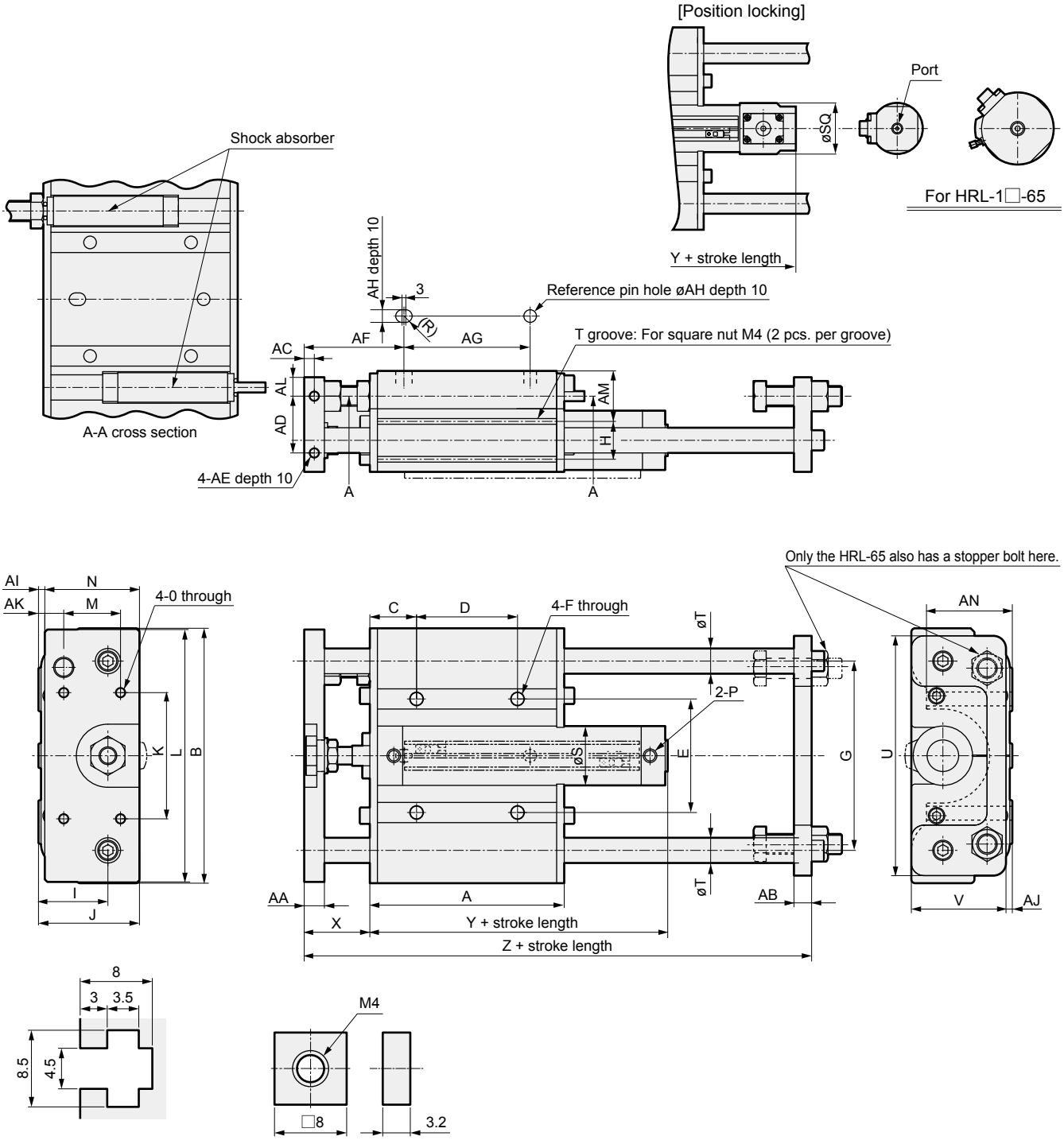

T groove section dimension

Integrated square nut dimension

Model No.	Stroke range (mm)	A	AA	AB	AC	AD	AE	AF	AG	AH	AI	AJ	AK	AL	AM	AN	B	C	D
HRL-1-25	50,75,100	154	16	14	8	45	M8	79	100	$10^{+0.03}_{0}$	5	5	20	15	40	68	202	37	80
-50	125,150,200		19		9.5			82											
-65	250,300											2							

Model No.	E	F	G	H	I	J	K	L	M	N	O	P	S	SQ	T	U	V	X	Y No position locking	Y With position locking	Z
HRL-1-25	90	11	150	30	55	80	100	200	45	75	M8	Rc1/8	47	51	20	190	75	52	86	121	252
-50												Rc1/4	58	60	25			55	98	138	255
-65						92							72	72.1	30		78				

Dimensions

● HRL-1L-25 to 65 (long body)

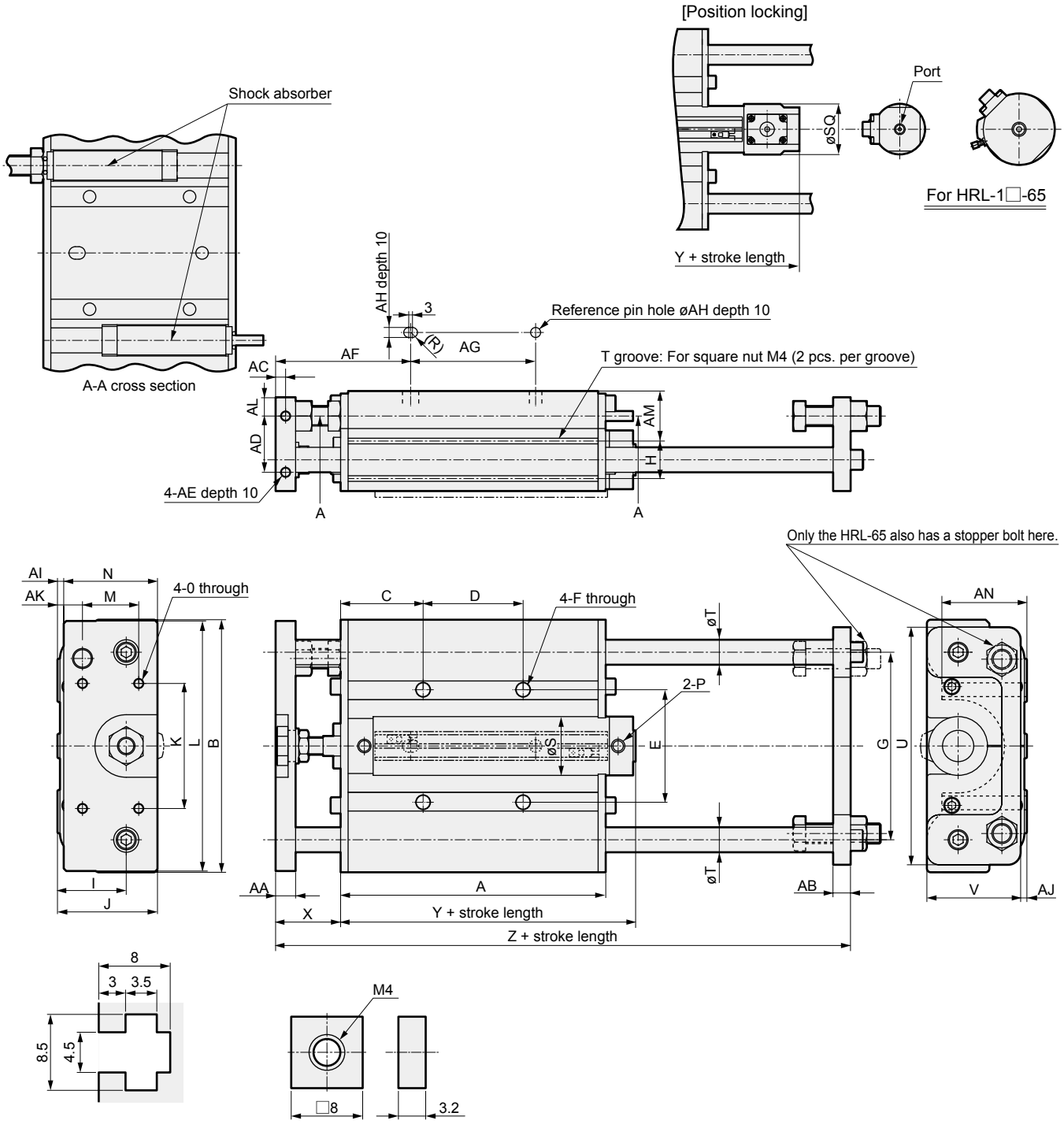

T groove section dimension Integrated square nut dimension

Model No.	Stroke range (mm)	A	AA	AB	AC	AD	AE	AF	AG	AH	AI	AJ	AK	AL	AM	AN	B	C	D
HRL-1L-25	350,400	212	16	14	8	45	M8	108	100	$10^{+0.03}_{0}$	5	5	20	15	40	68	202	66	80
-50	450,500		19		9.5			111											
-65	550,600											2							

Model No.	E	F	G	H	I	J	K	L	M	N	O	P	S	SQ	T	U	V	X	Y No position locking	Y With position locking	Z
HRL-1L-25	90	11	150	30	55	80	100	200	45	75	M8	Rc1/8	47	51	20	190	75	52	86	121	310
-50												Rc1/4	58	60	25			55	98	138	313
-65						92							72	72.1	30		78				

LCM
LCR
LCG
LCW
LCX
STM
STG
STS/STL
STR2
UCA2
ULK*
JSK/M2
JSG
JSC3/JSC4
USSD
UFCD
USC
UB
JSB3
LMB
LML
HCM
HCA
LBC
CAC4
UCAC2
CAC-N
UCAC-N
RCS2
RCC2
PCC
SHC
MCP
GLC
MFC
BBS
RRC
GRC
RV3*
NHS
HRL
LN
Hand
Chuk
MecHnd/Chuk
ShkAbs
FJ
FK
SpdContr
Ending

Dimensions

● With front flange

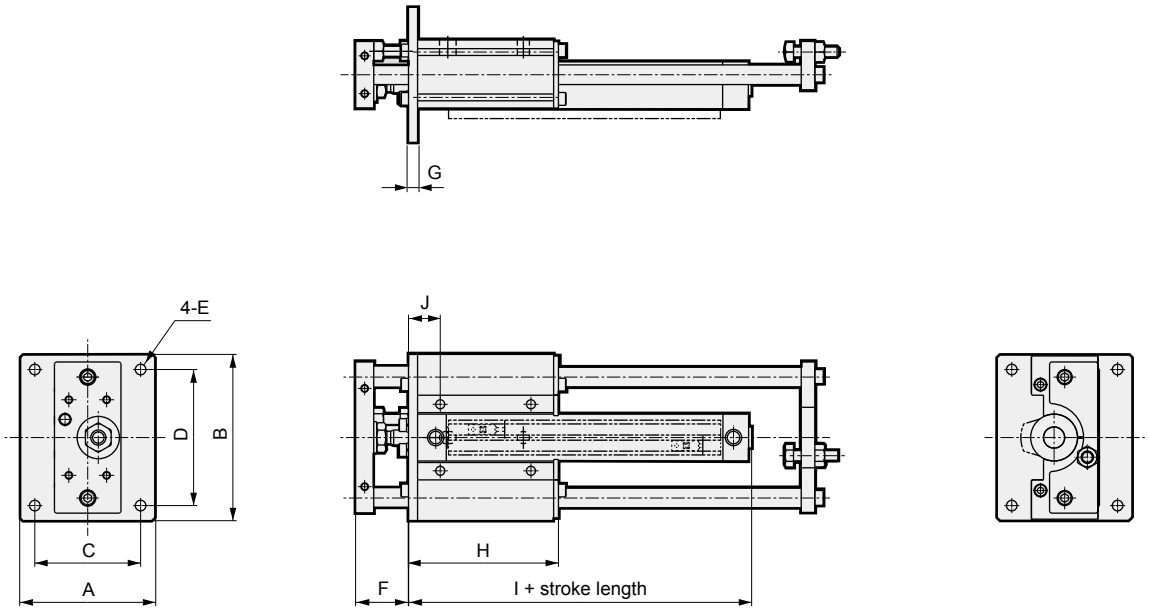

* Other dimensions are the same as those of the basic.

Model No.	A	B	C	D	E	F	G	H Basic	H Long body	I	J Basic	J Long body
HRL-1□F-05	90	110	70	90	7	35	6	99.2	144.2	77	21	43.5
-10												
-15		130		100					154.2	79		48.5
-15H												
-25	140	200	110	170	11	46	12	160	218	92	43	72
-50						49				104		
-65												

Allowable eccentric load

● HRL-1 (basic)

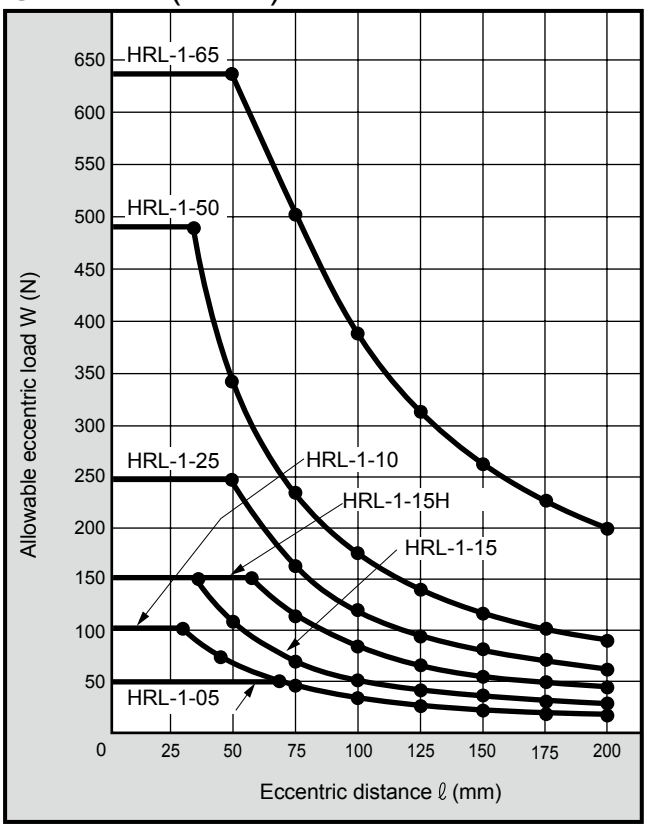

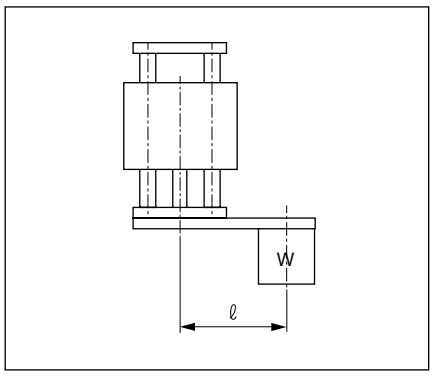

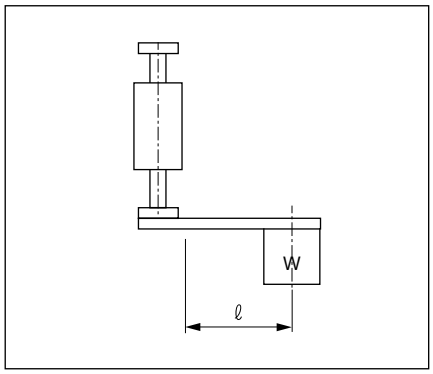

HRL-1L (long body)

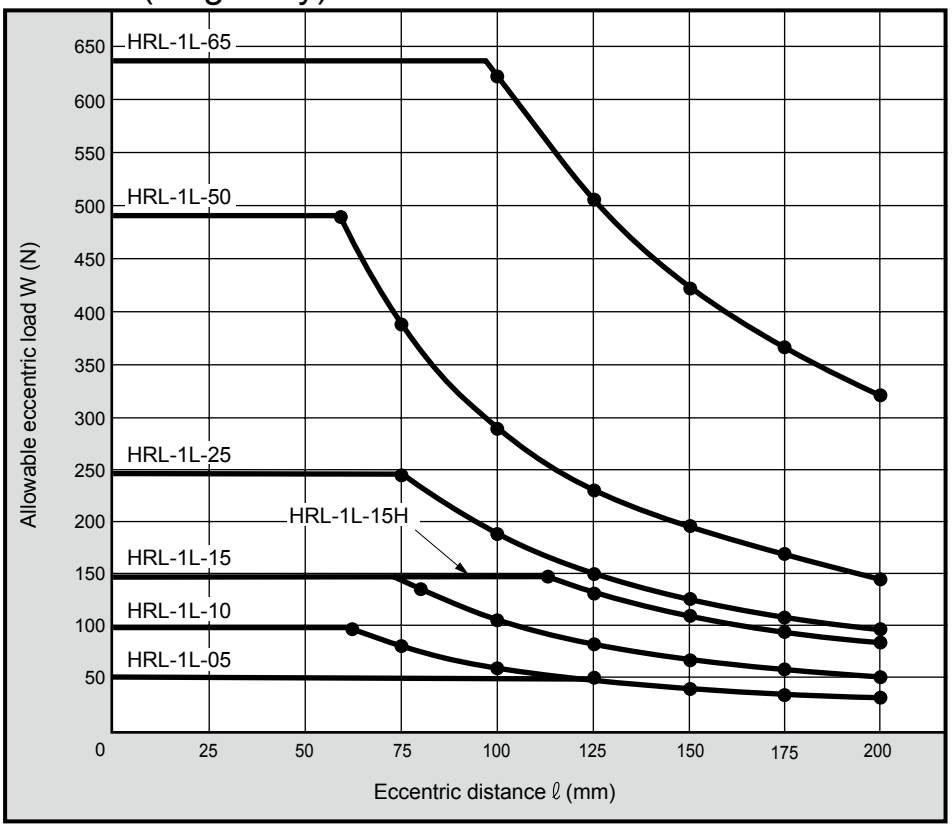

Pneumatic components

Safety Precautions

Be sure to read this section before use.
Refer to Intro Page 73 for general information of the cylinder, and to Intro Page 80 for general information of the cylinder switch.

Product-specific cautions: New handling system / hybrid robot

Design/selection

1. Lubrication

CAUTION

■ Cylinder
This cylinder is no-lubrication. If lubrication is required, use turbine oil class 1 ISO VG32. Packing may be damaged if a different lubricant is used, and operation faults may occur. Take care to avoid lubrication shortages when reapplying lubricant. If lubricant runs out, operation will become unstable.

■ LM guide
Lubricate from the grease nipple every 100 km of travel distance.
Use one of:
Lithium grease (JIS 2)
Urea grease (JIS 2)
for lubrication.

2. Service life

CAUTION

■ The life of the unit is greatly affected by the life of pneumatic components.
General components are used for pneumatic components, so life is 3 to 5 million operations or a travel of approx. 1,000 km.
(Usage conditions and operating environment greatly affects the service life, so the above values are not guaranteed)

Mounting, installation and adjustment

1. Mounting orientation

WARNING

■ Units other than HRL-1(L) are all horizontally mounted only. Damage will result if mounted upside-down.
Select the vertical transfer (Z-axis direction) load capacity according to the inner cylinder's thrust.

2. Quality of air

CAUTION

■ The compressed air supplied to drive the unit must be clean and have low moisture.
Install a filter, etc., on the pneumatic circuit. Note the filter's nominal filtration rating, flow rate, and installation (near the direction valve). Thoroughly discharge drainage from the filter. (Regularly inspect to prevent drainage reaching the element.)
● If supplying a toxic compressed gas, the service life of repair parts (packings and gaskets) for the equipment (filters, direction control valves, cylinders, etc.) will be drastically reduced, causing faulty operation.

■ Ultra-dry air will shorten the life of pneumatic components, so should not be used.

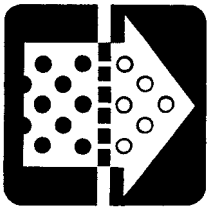

3. Piping

CAUTION

■ Before piping to the cylinder, be sure to carefully flush out (blow with compressed air) the inside of the pipes.
Cutting chips, sealing tape or rust from piping construction process may enter the pipes, causing faulty operation such as air leaks.

4. Centering adjustment

CAUTION

When a 3-position all ports closed drive valve is used or if the block valve assembled slider table is slid with external force, negative pressure will be generated on the drive valve, and the seal belt may drop off, leading to air leakage; therefore, adjust with the block released.

Use/maintenance

1. Position locking

⚠WARNING

■ Make sure to supply pressure to port Ⓑ, and before unlocking, check that load is not applied to the lock mechanism.
If pressure is supplied to port Ⓐ when both ports Ⓐ and Ⓑ are exhausted and the piston is locked, the lock may not be released or the piston rod may pop out. This can be extremely hazardous.

■ Keeping the cylinder with pressure applied to the lock mechanism may cause the stopper pin to come off.
Do not use 3-position closed center and 3-position P/A/B connection solenoid valves.

■ If back pressure is applied in the locked state, the lock may be released. Use a discrete solenoid valve or use an individual exhaust manifold.

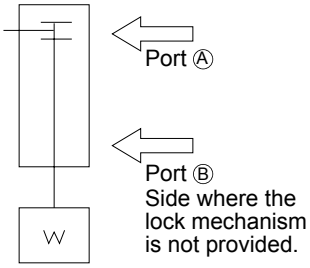

2. External environment

⚠CAUTION

■ Install the unit and other equipment (filter, directional control valve, cylinder, etc.) where they will not be subject to rain or direct sunlight. Also, do not use this product outdoors.

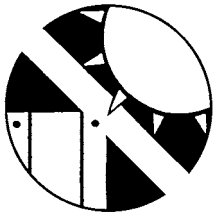

■ Do not use this product where it will be subject to cutting chips, oil, coolant, oil mist, etc.
If this type of environment is unavoidable due to installation, provide a protective cover, etc.

■ Do not use this product where foreign matter such as cutting chips, dust, or spatter, etc., will contact or enter the units.
If this type of environment is unavoidable due to installation, provide a protective cover, etc.

■ Do not use this product in an environment where it may be corroded.
Do not use in this kind of environment, or damage and/or misoperations may occur.

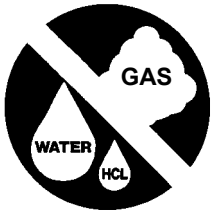

3. Operating ambient temperature

⚠CAUTION

■ The range of the ambient temperature within which the unit can be used is 5°C to 60°C.
Do not use the unit if the temperature exceeds 60°C, or damage and/or misoperations may occur.
If the temperature is less than 5°C, moisture in the circuit may freeze and lead to damage or faults. Take measures to prevent freezing.

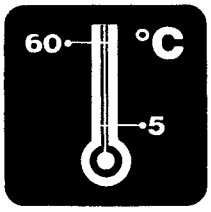

4. Repair parts

⚠CAUTION

The cylinder, valve packings, O-rings, gaskets, cushioning rubber and shock absorbers used by this unit are repair parts. Refer to device catalogs for details on model No.
In particular, using a product with an ineffective shock absorber will increase vibrations/shocks and decrease stopping accuracy, potentially damaging the guide or other components; therefore, if it stops working well it should be replaced.

Length measuring function

	Page
Cylinder/hand with length measuring sensor **SSD-LN/BHA-LN** Series	1465

LN

SSD-LN
BH*-LN

Length measuring function

Cylinder/hand with length measuring sensor

ø12/ø16/ø20/ø25/ø32/ø50

Overview

A length measuring sensor is installed onto the small cylinder hand component. This enables work on workpieces (actuator function) and detection/ inspection (defective parts check/simple length measurement) at the same time.

Features

Select according to applications

Linear and gripping system are available for actuator. Output can be selected depending on the application.

Defective parts check for workpieces can be done. (Display, analog output)

Defective parts check for workpieces and simple length measurement in the specified stroke range can be done at the same time as the actuator work.

High function with added display (Display)

Display is a two-channel specification, and two actuators can be controlled with a single display. (One analog output point, four switch output points x 2 CH)

Intermediate detection available (Switch output)

Sorting mixed workpieces and workpiece detection is possible.
In addition, amplifier installed type is capable of detecting one point and separated amplifier type up to two points.

Operation adjustment is easy (Switch output)

Switch operation point, operating range can be easily adjusted with trimmer.

Bend resistance improved

Alloy wire is used for the sensor lead wire. Leadout direction can be selected from 2 directions.

CONTENTS

Product introduction	1466
● Sensor/amplifier/display	1470
● Cylinder with length measuring sensor (SSD-LN/SSD-O-LN)	1474
● Hand with length measuring sensor (BHA/BHG/BHE-LN)	1478
Technical data	1494
⚠ Safety precautions	1497

2 Function integrated actuator.

Series includes display
Inspection is simple and easy

Display added to analog output.
By the addition of display, inspection results are processed directly and digitally displayed, thus eliminating the hassles of post-processing.

Simplifying conventionally difficult
intermediate search (hand)

Since the sensor output is proportional to the actuator operation, workpiece intermediate gripping can be detected. A variety of workpiece transport needs are met, such as sorting mixed workpieces, detecting differently shaped workpieces and abnormal gripping detection.

By key operation
adjustment is easy

The switch operation point and operating range are easily adjusted with key operation on the display.

Models and bore sizes have increased
A wide range of choices according to the application

Mounted actuator has models compatible with super increased compact cylinder SSD series, cross roller parallel hand BHA/BHG series and highly rigid centering hand BHE series and can support a wider range of applications.

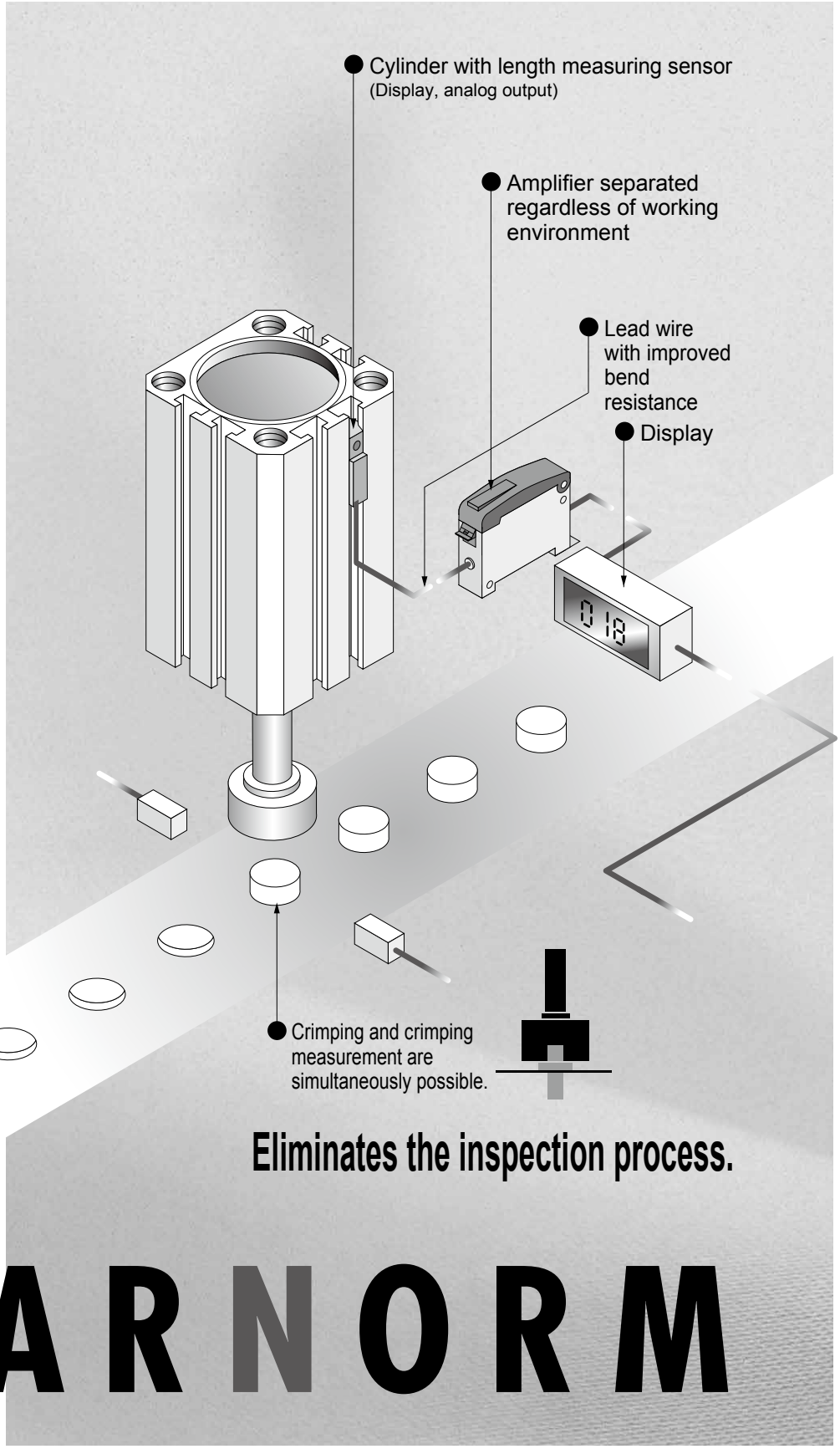

[Length measuring sensor]

Named as a portmanteau of the terms linear (meaning straight line) and norm (meaning reference), a newly developed special magnetic sensor (PAT.P) that can obtain a nearly linear output for the travel distance of the piston with magnet. Intermediate detection and length measurement functions never achieved by conventional cylinder switches can be added to the actuator.

LINEARNORM

A newly developed length measuring sensor is installed onto the small cylinder and hand component. This is a next-dimension pneumatic component that enables workpiece operation (actuator function) and detection/inspection (defective parts check, simple length measurement) at the same time.

Actuator system with length measuring sensor (LN)

Linear system

Cylinder with LN

Cylinder

Super compact cylinder

SSD-LN
SSD-O-LN Series

Gripping system

Hand with LN

Applicable hand

Compact cross roller parallel hand

Centering hand

BHE Series

BHG Series

BHA Series

Output	Analog output 1 to 5 V voltage output at an arbitrary 8 mm within the stroke	Switch/analog double output display 1 to 5 V voltage and switch output at an arbitrary 10 mm within the stroke	Analog output 1 to 5 V voltage output at double finger full stroke	Switch/analog double output display 1 to 5 V voltage and switch output at double finger full stroke	Switch output ON-OFF output at double finger full stroke
Amplifier separated	●	●	●	●	●
Amplifier mounting	—	—	—	—	●
Bore size (mm)	ø12 ø16 ø20 ø32 ø50		ø20 or equiv. ø25 or equiv.	ø20 or equiv. ø25 or equiv.	ø12 or equiv. ø16 or equiv. ø20 or equiv. ø50 or equiv.
Stroke length (mm)	20, 30, 50		—		

Display

Hand with length measuring sensor application example

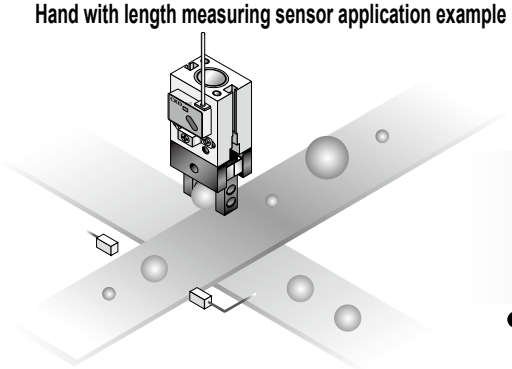

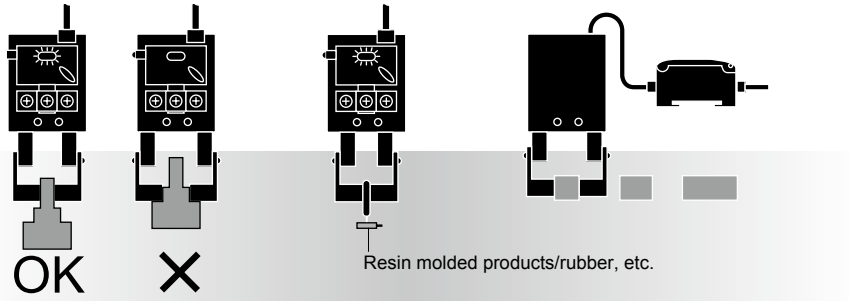

● Confirmation of workpiece gripping orientation

● Check the grip signal of the workpiece to be modified

● Identification of workpieces of different shape

Applications

1 Determination of differently shaped workpieces

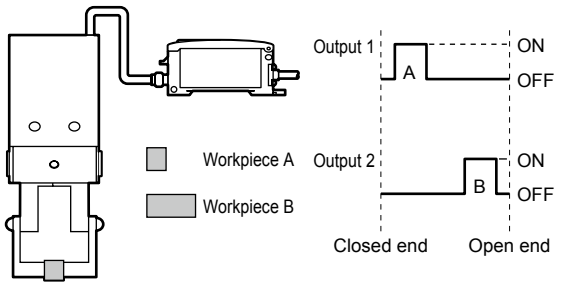

Workpieces A and B are of different sizes. To clarify which workpiece is gripped, 1 is to be output when A is gripped and 2 output when B is gripped. When using switch, settings are made easily with the trimmer on the length measuring sensor's amplifier unit. Display of switch outputs are digitally set with buttons. The trimmer can change the operation point and range, so signals for each A and B workpiece can be output if a narrow movement range is set, and workpieces can be judged on the load side (example: PLC). In addition, for the analog output, analog output will change in accordance with the size of the workpiece. Hence control is possible by reading these changes into the PLC.

2 Press fit of workpiece

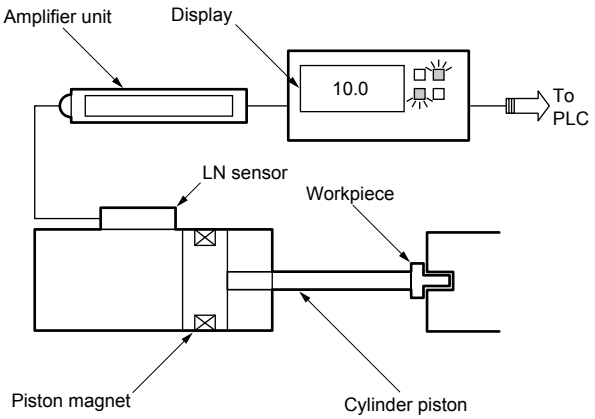

Using a length measuring sensor with the compact cylinder allows inspection of workpiece press-fitting with the length measuring sensor's output while the workpiece is press-fitted with the cylinder. When using a display, the thickness of the workpiece can be measured at the display section. By reading the determined signal into the PLC, the line can be automated.
For the cylinder, the limited measured range length is set at the factory to match the user's required detection position, allowing the system to be used by simply connecting the wiring.

3 Confirmation of workpiece gripping orientation

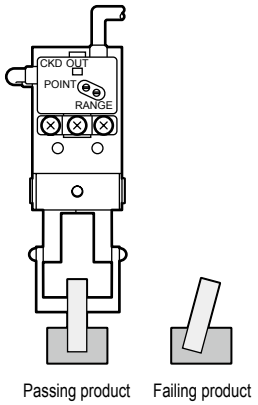

It can be used to check whether the workpiece is gripped at the correct orientation.
A narrow movement range is set so that it turns ON only at normal workpiece gripping orientation.

4 Confirmation of clamping

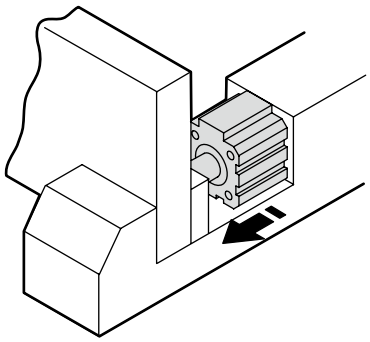

Clamping is controlled by retrieving the cylinder piston stop position as length measuring sensor output.

MEMO

Sensor/amplifier/display

* Excluding display

Sensor/amplifier section specifications

°F = 9/5°C + 32

Item		Amplifier installed/ switch output LN-□ VS1PAH/V	Amplifier separate/ switch output LN-□H/ VCS□S	Amplifier separate/ analog output LN-10□ CLS	Amplifier separate/ display (LN-DN) dedicated LN-10□CLDS
Applications		PLC/relay		PLC	————
Power supply voltage		24 VDC ±10%			
Current consumption		20 mA or less		30 mA or less	
Indicator lamp		Switch output indicator lamp: yellow LED lit when ON		Green LED lit when power applied Sensor mounting position display yellow LED lit	
Switch output point		1	2	————	
Switch output		NPN open collector output, 30 VDC or less 50 mA or less, internal voltage drop 1.2 V or less		————	
Analog output		————		1 to 5V connected load 50 kΩ or more	1 to 4.5V (Input to display)
Analog output linearity		————		±5% F.S. or less	————
Valid measured range length		————		Hand: Double finger full stroke Cylinder: At any 8 mm area over piston stroke	Hand: Double finger full stroke Cylinder: At any 10 mm area over piston stroke
Lead wire	Sensor section	35 mm (oil resistant vinyl cabtyre cable 3-conductor 0.2 mm^2)	2 m (oil resistant vinyl cabtyre cable 3-conductor, 0.2 mm^2 shielded bend resistant wire)		
	Amplifier section	3 m (oil resistant vinyl cabtyre cable 3-conductor, 0.2 mm^2, bend resistant wire)	3 m (oil resistant vinyl cabtyre cable 4-conductor 0.2 mm^2)	3 m (oil resistant vinyl cabtyre cable 4-conductor, 0.2 mm^2, shielded wire)	3 m (oil resistant vinyl cabtyre cable 7-conductor, 0.2 mm^2, shielded wire)
Insulation resistance		20 MΩ and over with 500 VDC megger			
Withstand voltage		No failure after 1 minute of 1,000 VAC application.			
Shock resistance	Sensor section	294 m/s^2	980 m/s^2		
	Amplifier section		294 m/s^2		
Degree of protection	Sensor section	IEC standard IP65	IEC standards IP67, oil resistance		
	Amplifier section		IEC standard IP65		
Ambient temperature/humidity		-10 (14°F) to 60°C (140°F), 85% RH or less			
Switch operating range adjusting range (*3)		0 to 80% and over of full stroke (Applies to one stroke of the two hand fingers)		————	
Switch operating points temperature drift		0.1 mm/10°C (50°F) or less			
Analog output temperature drift		————		50 mV/10°C (50°F) or less	————
Repeatability (*1)		±0.1 mm or less (at 25°C, magnetic field disturbance, no deformation or wear of actuator/jig)			————
Mounting method		Dedicated bracket mounting	DIN rail or direct mount		
Weight (g)		54	172	175	199

*1 : This value includes actuator repeatability. This applies to one stroke of two hand finger strokes.
*2 : Refer to page 1497 for a guide on selecting models for mixed workpiece sorting applications.
*3 : Switch operating range adjusting range
Example) BHA-LN-01CS operational stroke length - 5 mm
5 mm for two fingers → 2.5 mm for one finger.

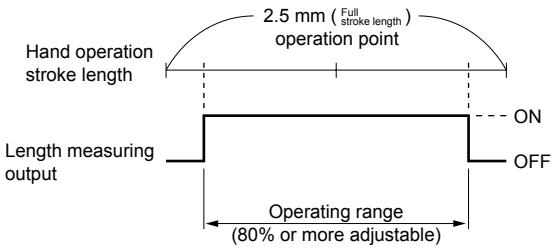

If the operation point is set to the center of the stroke, adjustments exceeding 80% and over of the full stroke are possible.

LCM
LCR
LCG
LCW
LCX
STM
STG
STS/STL
STR2
UCA2
ULK*
JSK/M2
JSG
JSC3/JSC4
USSD
UFCD
USC
UB
JSB3
LMB
LML
HCM
HCA
LBC
CAC4
UCAC2
CAC-N
UCAC-N
RCS2
RCC2
PCC
SHC
MCP
GLC
MFC
BBS
RRC
GRC
RV3*
NHS
HRL
LN
Hand
Chuk
MecHnd/Chuk
ShkAbs
FJ
FK
SpdContr
Ending

Display section specifications

Item	LN-DN
Power supply voltage	24 VDC ±10%
Current consumption	150 mA or less
Sensor input	2CH (1 to 4.5V voltage input)
Output	· Analog output (1 point) x 2CH (1 to 5 V voltage output) · Switch output (4 points) x 2CH: ON-OFF output based on arbitrary set position (1), or window output based on same set position (2)
Display	· 7-segment display (max. display ± 1999.9 mm, min. unit 0.1 mm) ·Absolute value/incremental value identification display, CH identification display, switch output display, switch output short-circuit display
Switch output	NPN open collector output (*4), 30 VDC/50 mA or less, internal voltage drop 1.2 V or less, PLC, relay
Analog output	1 to 5 V output, connecting load 500 KΩ and over
Analog output linear accuracy (*1)	±1% F.S. or less (at 25°C (77°F): CKD regulated measuring method)
7-segment display linear accuracy (*2)	7-segment display is reference value
Repeatability (*3)	±0.1 mm or less (at 25°C, magnetic field disturbance, no deformation or wear of actuator/jig)
Analog output temperature drift	50 mV/10°C (50°F) or less (fluctuation of approx. ±0.1 mm or equivalent with displayed value conversion)
Insulation resistance	20 MΩ and over with 500 VDC megger
Withstand voltage	No failure after 1 minute of 1,000 VAC application.
Shock resistance	294 m/s^2
Degree of protection	IEC standard IP40
Ambient temperature/humidity	-10 (14°F) to 60°C (140°F)/85% RH or less
Mounting method	DIN rail or direct mount
Weight (g)	93

*1 : Because an analog sensor for converting the piston magnetic flux density to a voltage value is used, accuracy may decrease in actual use if magnetic contact occurs from either end of the piston stroke or a disturbing magnetic field enters the vicinity.
*2 : Display accuracy varies with the span setting for the two piston stop points.
*3 : This value includes actuator repeatability. This applies to one stroke of two hand finger strokes.
*4 : Contact CKD for the PNP open collector output.

Configuration of display

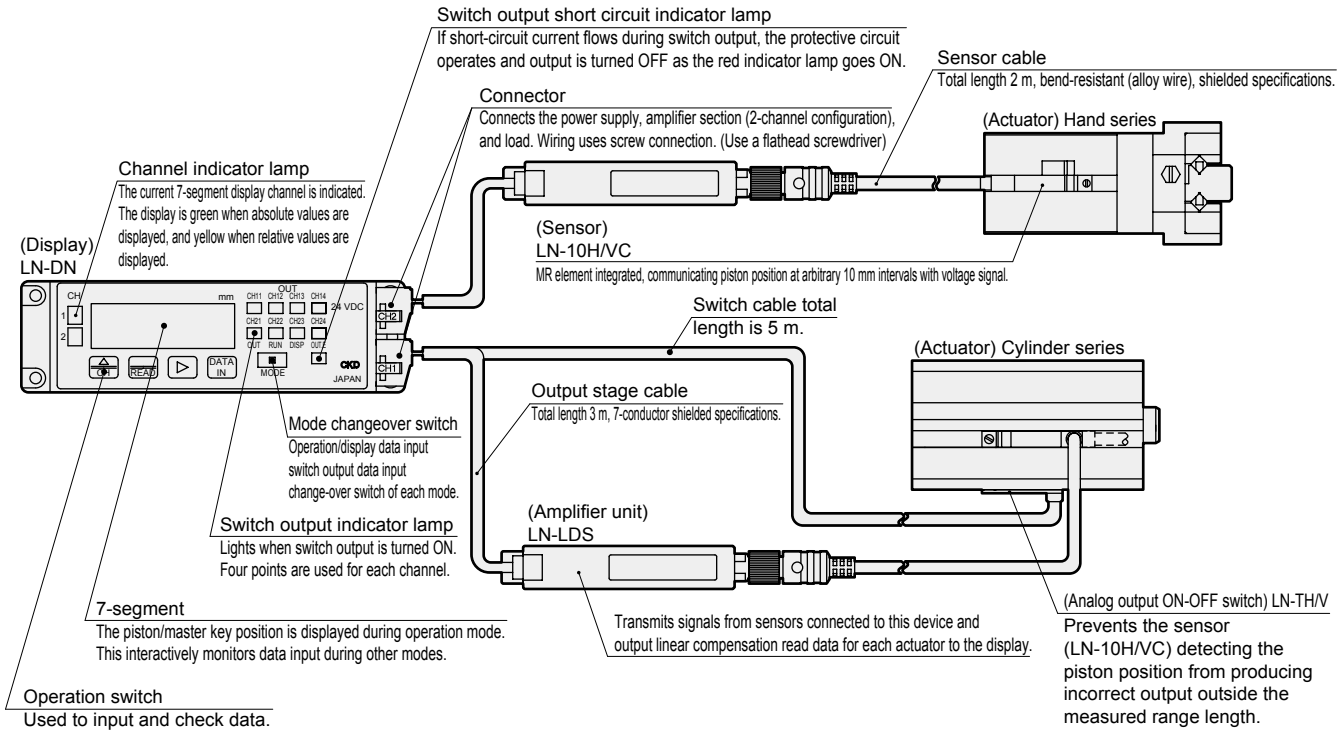

LCM
LCR
LCG
LCW
LCX
STM
STG
STS/STL
STR2
UCA2
ULK*
JSK/M2
JSG
JSC3/JSC4
USSD
UFCD
USC
UB
JSB3
LMB
LML
HCM
HCA
LBC
CAC4
UCAC2
CAC-N
UCAC-N
RCS2
RCC2
PCC
SHC
MCP
GLC
MFC
BBS
RRC
GRC
RV3*
NHS
HRL
LN
Hand
Chuk
MecHnd/Chuk
ShkAbs
FJ
FK
SpdContr
Ending

Dimensions

Sensor section

● Amplifier separated

● LN-05HC

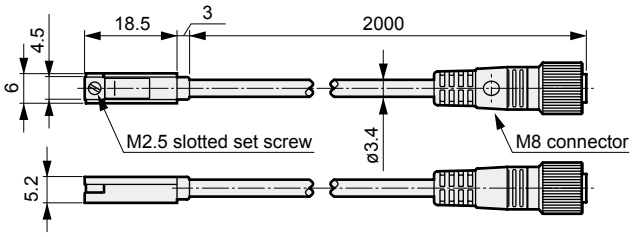

● LN-10HC

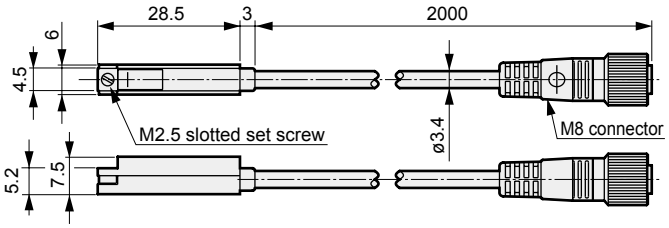

● LN-05VC

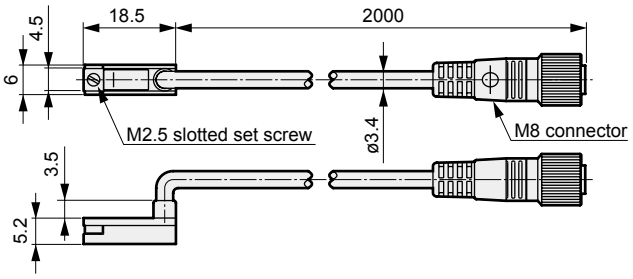

● LN-10VC

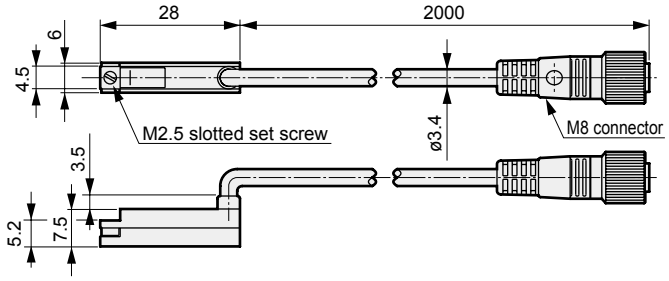

Amplifier section

● Amplifier separated

● LN-□S

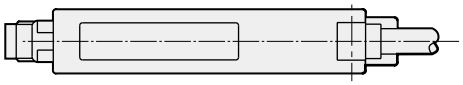

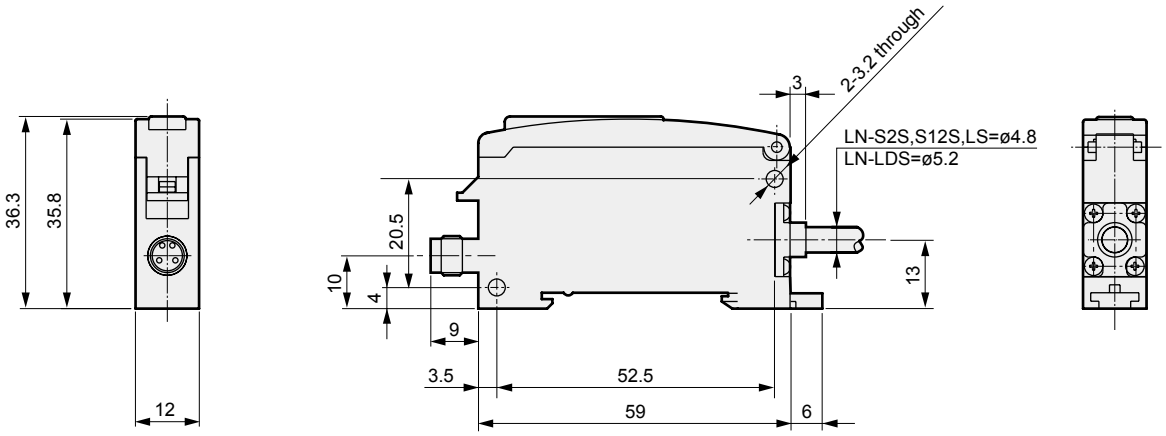

Dimensions

Display section

● LN-DN

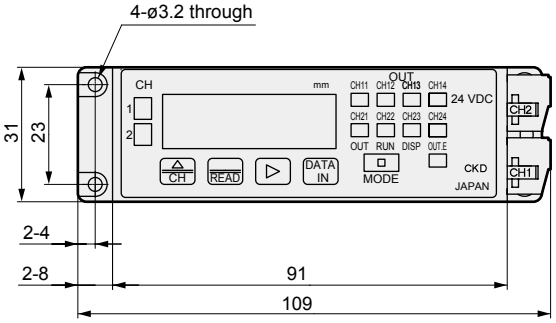

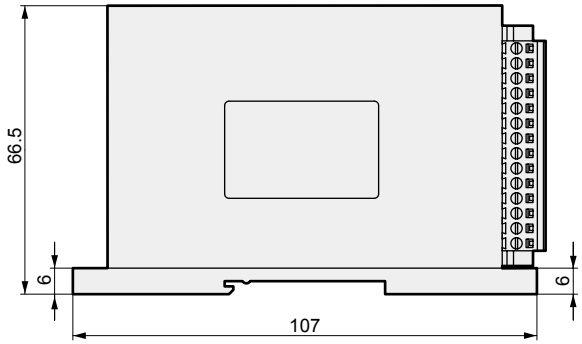

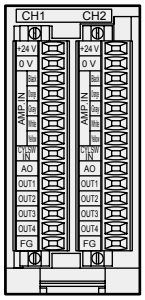

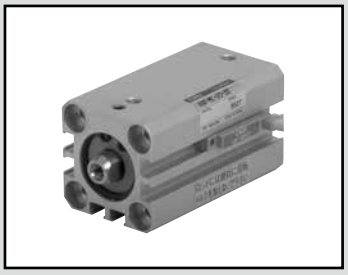

Cylinder with length measuring sensor

SSD-LN Series

● Bore size: ø12/ø16/ø20/ø32/ø50

* Excluding display

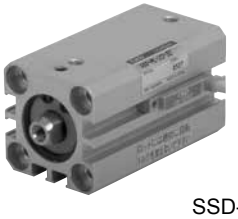

SSD-LN

Cylinder section specifications

● SSD-LN Series

Item \ Model No. (*1)	SSD-LN	SSD-O-LN
Actuation	Double acting/single rod	Double acting/single rod/low speed
Working fluid	Compressed air	
Max. working pressure MPa	1.0 (≈150 psi, 10 bar)	
Min. working pressure MPa	0.1 (≈15 psi, 1 bar)	0.05 (≈7.3 psi, 0.5 bar)
Proof pressure MPa	1.6 (≈230 psi, 16 bar)	
Ambient temperature °C	-10 (14°F) to 60 (140°F) (no freezing)	
Bore size mm	ø12/ø16/ø20/ø32/ø50	
Stroke length mm	20/30(ø12/ø16), 20/50 (ø20/ø32/ø50)	
Stroke tolerance mm	0 to +1	
Port size	M5 (ø12/ø16/ø20), Rc1/8 (ø32), Rc1/4 (ø50)	
Piston speed mm/s	50 to 500	10 to 200
Cushion	None	
Lubrication	Not required (if necessary: turbine oil class 1 ISO VG32)	Not available
Non-rotating accuracy °	±2(ø12), ±1.5(ø16/ø20), ±1(ø32/ø50)	

*1 : Appearance and dimensions of cylinders are the same as the compact cylinder SSD-ML (double acting rotation-stop), but the internal structure differs. (This cylinder is for length measurement.)

Sensor, amplifier (separated) specifications

Refer to page 1470.

Display section specifications

Refer to page 1471.

Weight table

Unit (g)

Stroke length / Bore size	20	30	50
ø12	111	122	
ø16	135	157	
ø20	189		263
ø32	346		476
ø50	661		914

Length measuring sensor output characteristics

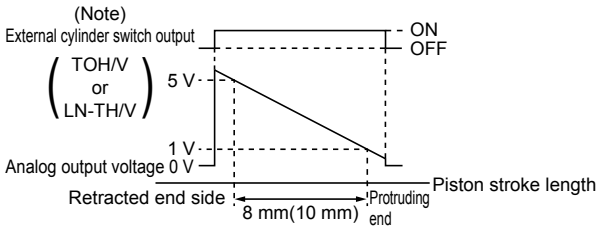

(Notes)
A separate analog output ON-OFF switchover switch for retrieving the analog output voltage is required at a random 8 mm (10 mm for display) interval of the full cylinder stroke. Combinations are shown below.

Analog output ON-OFF switch model No.	Output	Measured range length
TOH/V5	Analog output	8 mm
LN-TH/V	Display	10 mm

How to order

SSD - LN - 20 20 - 10 H C 1 2 5 LDS DN

- Ⓐ Drive equipment specifications
- Ⓑ Cylinder bore size
- Ⓒ Cylinder stroke
- Compatible sensor
- With connector
- Ⓓ Sensor lead wire outlet direction
- Ⓔ Sensor mounting surface (*1)
- Ⓕ Analog output ON-OFF change-over switch mounting surface (*1) (*2)
- Ⓖ Detecting position
- Ⓗ Amplifier unit output and shape
- Ⓘ Display (*4)

Code	Description
Ⓐ Drive equipment specifications	
SSD	Super compact (double acting)
SSD-O	Super compact (double acting/low speed)
Ⓑ Cylinder bore size (mm)	
12	ø12
16	ø16
20	ø20
32	ø32
50	ø50
Ⓒ Cylinder stroke (mm)	
20	20
30	30 (compatible with ø12, ø16 only)
50	50 (applicable except for ø12, ø16)
Ⓓ Sensor lead wire outlet direction	
H	Axial lead wire
V	Radial lead wire
Ⓔ Sensor mounting surface	
1	Right
2	Bottom side
3	Left
Ⓕ Analog output ON-OFF switch mounting surface	
1	Right
2	Bottom side
3	Left
Ⓖ Detecting position (mm)	
Refer to the figure at left. (*3)	
Ⓗ Amplifier unit output and shape	
LS	Amplifier separate/analog output
LDS	Amplifier separate/for display (LN-DN)
Ⓘ Display	
DN	Switch output section NPN display

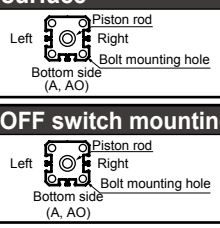

⚠ Precautions for model selection

*1 : Sensor and analog output ON-OFF switch cannot be installed on the same surface. (ø12, ø16 only)

*2 : The lead wire outlet direction of analog output ON-OFF switch, the same one as the sensor, will be selected automatically. Lead wire length is 5 m specifications.

*3 : If detection position is at "10", the detection position center is located 10 mm in front of the cylinder full stroke projecting end, with measured range length ±4 (±5) mm of this center point. The detecting position should be an integer.

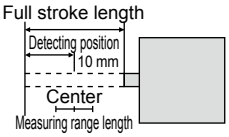

*4 : Two channels can be used for display. Ch1 is allocated by this model display. When using another channel, the display must be ordered separately.
Ⓐ-LN-ⒷⒸ-10ⒹⒺⒻⒼLDS

*5 : When ordering a single model for maintenance:
· Cylinder: Ⓐ-LN-ⒷⒸ
· Sensor: LN-10ⒹⒸ
· Amplifier unit: LN-Ⓗ
· Display: LN-DN
· Analog output ON-OFF switch
SW-TOH5 or TOV5: Select when the mounted actuator is ø20 and over in diameter with an analog output amplifier (LN-LS).
LN-TH or TV: Select for display.
When placing a discrete order, refer to product specifications sheet or handling precautions attached with the unit for details on setting.

● Cylinder mounting bracket model No.

LN - A - LB - 20

Code	Description
Ⓐ Bore size	
12	For ø12
16	For ø16
20	For ø20
32	For ø32
50	For ø50

Note: Two axial feet and eight hexagon socket head cap screws for installation are attached (4 pcs. for ø50).

Cylinder mounting bracket (axial foot) is available. Order separately when required. Appearance and outline dimensions are the same as for the compact cylinder, but mounting bolt material differs. (Stainless steel bolt dedicated)
Cylinder switches may be mountable in a separate groove for piston protrusion and pull end confirmation. Order separately when required.

● Discrete cylinder switch model No.

SW - T 0 H 3

- Ⓐ Output
- Ⓑ Lead wire outlet direction
- Ⓒ Lead wire length

Code	Description
Ⓐ Output	
0	Reed 2-wire
5	Reed 2-wire without indicator lamp
2	Proximity 2-wire
3	Proximity 3-wire
2Y	Proximity 2-wire 2-color display
3Y	Proximity 3-wire 2-color display
Ⓑ Lead wire outlet direction	
H	Axial lead wire
V	Radial lead wire
Ⓒ Lead wire length	
Blank	1 m (standard)
3	3 m (option)
5	5 m (option)

LCM
LCR
LCG
LCW
LCX
STM
STG
STS/STL
STR2
UCA2
ULK*
JSK/M2
JSG
JSC3/JSC4
USSD
UFCD
USC
UB
JSB3
LMB
LML
HCM
HCA
LBC
CAC4
UCAC2
CAC-N
UCAC-N
RCS2
RCC2
PCC
SHC
MCP
GLC
MFC
BBS
RRC
GRC
RV3*
NHS
HRL
LN
Hand
Chuk
MecHnd/Chuk
ShkAbs
FJ
FK
SpdContr
Ending

Dimensions

● SSD-LN/SSD-O-LN
· ø12/ø16

*1 : Refer to pages 1472 and 1473 for outline dimensions of the sensor, amplifier (separated), and display.
*2 : Refer to the next page for dimensions.

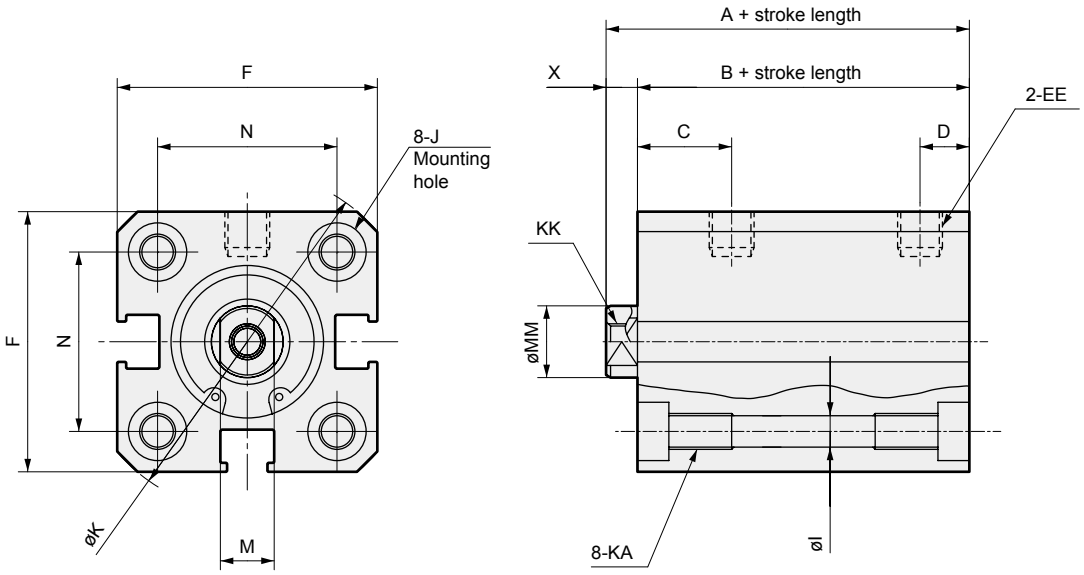

● SSD-LN/SSD-O-LN
· ø20

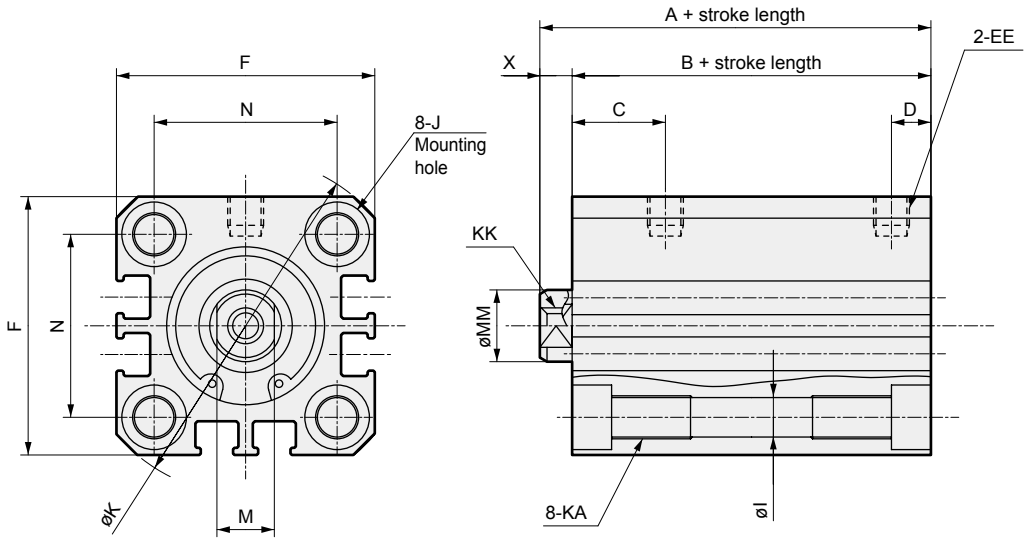

Dimensions

● SSD-LN/SSD-O-LN
·ø32/ø50

Note: Refer to pages 1472 and 1473 for outline dimensions of the sensor, amplifier (separated), and display.

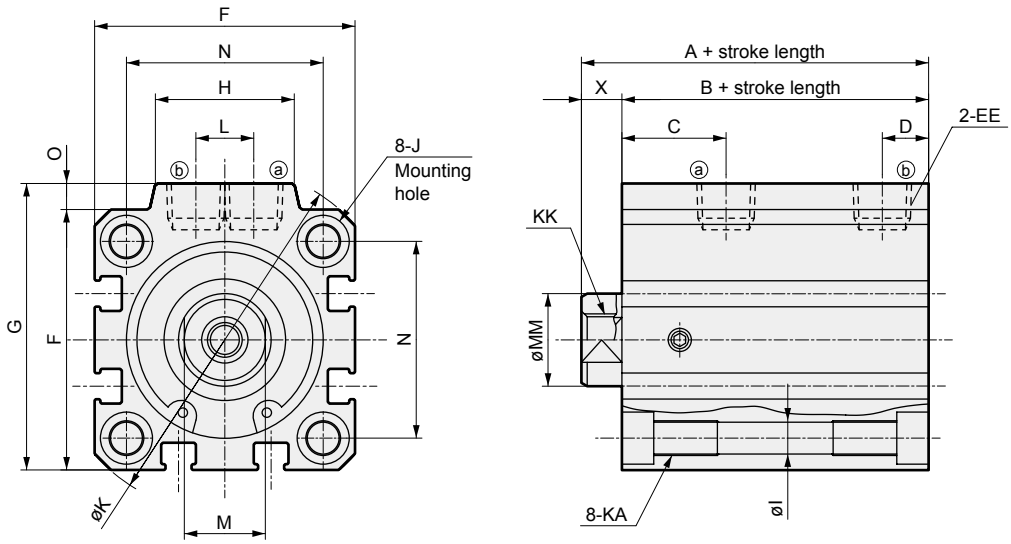

Code / Bore size (mm)	A	B	C	D	EE	F	G	H	I	J	K	KA	KK	L
ø12	35.5	32	10.5	5.5	M5	25	-	-	3.5	6.5 spot face depth 3.5	32	M4 depth 7	M3 depth 6	-
ø16	35.5	32	10.5	5.5	M5	29	-	-	3.5	6.5 spot face depth 3.5	38	M4 depth 7	M4 depth 8	-
ø20	39	34.5	13	5.5	M5	36	-	-	5.5	9 spot face depth 5.5	47	M6 depth 11	M5 depth 7	-
ø32	50	43	18	8	RC1/8	45	49.5	24	5.5	9 spot face depth 5.5	60	M6 depth 11	M8 depth 13	10
ø50	53.5	45.5	15.5	10.5	RC1/4	64	71	33	6.9	11 spot face depth 6.5	86	M8 depth 13	M10 depth 15	15

Code / Bore size (mm)	M	MM	N	O	X	Remarks
ø12	5	6	15.5	-	3.5	Overall length is 5 mm longer than standard product (SSD-ML). Other dimensions are the same as standard products.
ø16	6	8	20	-	3.5	Overall length is 5 mm longer than standard product (SSD-ML). Other dimensions are the same as standard products.
ø20	8	10	25.5	-	4.5	Dimensions are the same as standard product (SSD-ML).
ø32	14	16	34	4.5	7	Dimensions are the same as standard product (SSD-ML).
ø50	18	20	50	7	8	Dimensions are the same as standard product (SSD-ML).

Length measuring sensor with hand

BHA/BHG/BHE-LN Series

● Operating stroke length
BHA-LN, BHG-LN: 5/9/11/15 mm
BHE-LN: 7/10/14/16 mm

CE * Excluding display RoHS CAD

BHA

BHG

BHE

Hand specifications

● BHA Series

Item	Cross roller parallel hand (double acting)			
	BHA-LN-01CS	BHA-LN-03CS	BHA-LN-04CS	BHA-LN-05CS
Cylinder bore size mm	ø12	ø16	ø20	ø25
Working fluid	Compressed air			
Max. working pressure MPa	0.7 (≈100 psi, 7 bar)			
Min. working pressure MPa	0.1 (≈15 psi, 1 bar)			
Ambient temperature °C	5 (41°F) to 60 (140°F)			
Double finger stroke mm	5	9	11	15
Port size	M3	M5		
Weight g	140	200	290	460
Lubrication	Not required (use turbine oil class 1 ISO VG32 if necessary for lubrication)			

● BHG Series

Item	Cross roller parallel hand (double acting/with rubber cover)			
	BHG-LN-01CS	BHG-LN-03CS	BHG-LN-04CS	BHG-LN-05CS
Cylinder bore size mm	ø12	ø16	ø20	ø25
Working fluid	Compressed air			
Max. working pressure MPa	0.7 (≈100 psi, 7 bar)			
Min. working pressure MPa	0.15 (≈22 psi, 1.5 bar)			
Ambient temperature °C	5 (41°F) to 60 (140°F)			
Double finger stroke mm	5	9	11	15
Port size	M3	M5		
Weight g	170	230	320	490
Lubrication	Not required (use turbine oil class 1 ISO VG32 if necessary for lubrication)			

● BHE Series

Item	Centering hand (double acting)			
	BHE-LN-01CS	BHE-LN-03CS	BHE-LN-04CS	BHE-LN-05CS
Cylinder bore size mm	ø12	ø16	ø20	ø25
Working fluid	Compressed air			
Max. working pressure MPa	0.7 (≈100 psi, 7 bar)			
Min. working pressure MPa	0.2 (≈29 psi, 2 bar)			
Ambient temperature °C	5 (41°F) to 60 (140°F)			
Double finger stroke mm	7	10	14	16
Port size	M3	M5		
Weight g	130	180	300	480
Lubrication	Not required (use turbine oil class 1 ISO VG32 if necessary for lubrication)			

Note: Hand appearance is the same as the standard, but the internal structure differs. (This hand is for length measurement.)

Gripping power performance data is shown below.

· BHA : Page 1602
· BHG : Page 1608
· BHE : Page 1755

Sensor, amplifier (separated) specifications

Refer to page 1470.

Display section specifications

Refer to page 1471.

Length measuring sensor output characteristics

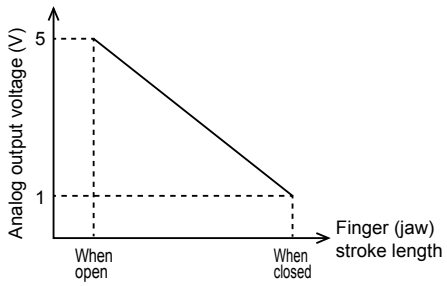

How to order

● Analog output

BHE - LN - 04CS - 10 H C LDS DN

● Switch output

BHE - LN - 05CS - 10 H C S12S

Ⓐ Drive equipment specifications

Ⓑ Cylinder bore size

Ⓒ Compatible sensor (*1)

Ⓓ Sensor lead wire outlet direction

Ⓔ Sensor lead wire terminal specifications

Ⓕ Amplifier unit output and shape

Ⓖ Display (*2)

Code	Description
Ⓐ Drive equipment specifications	
BHA	Cross roller parallel hand (double acting)
BHG	Cross roller parallel hand (double acting/with rubber cover)
BHE	Centering hand (double acting)
Ⓑ Size (cylinder bore size)	
01CS	ø12
03CS	ø16
04CS	ø20
05CS	ø25
Ⓒ Compatible sensor	
05	For 01CS, 03CS
10	For 04CS, 05CS
Ⓓ Sensor lead wire outlet direction	
H	Axial lead wire
V	Radial lead wire (amplifier installed in V only)
Ⓔ Sensor lead wire terminal specifications	
Blank	Without connector (for amplifier installed)
C	With M8 connector (for amplifier separated)
Ⓕ Amplifier unit output and shape	
S1PAH	Amplifier installed/lead wire straight switch 1-point output
S1PAV	Amplifier installed/lead wire L type switch 1-point output
S2S	Amplifier separate/switch 2 point output (01CS, 03CS compatible)
S12S	Amplifier separate/switch 2 point output (04CS, 05CS compatible)
LS	Amplifier separate/analog output (04CS, 05CS compatible)
LDS	Amplifier separate/for display (LN-DN) (04CS, 05CS compatible)
Ⓖ Display	
DN	Switch output section NPN display (04CS, 05CS compatible)

⚠ Precautions for model selection

*1 : Depending on the drive equipment on the length measurement sensor compatible sensors and amplifiers differ.

*2 : Two channels can be used for display. Ch1 is allocated by this model display. When using another channel, the display must be ordered separately.
Ⓐ-LN-Ⓑ-ⒸⒹⒺLDS

*3 : When ordering a single model for maintenance:
· Hand: Ⓐ-LN-Ⓑ
· Sensor: LN-ⒸⒹⒸ
· Amplifier unit (amplifier separate): LN-Ⓕ
· Amplifier unit with sensor (amplifier installed): LN-ⒸVⒻ
· Display: LN-DN
When placing a discrete order, refer to product specifications sheet or handling precautions attached with the unit for details on setting.

● Discrete cylinder switch model No.

SW - T 2 H 3

Ⓐ Output

Ⓑ Lead wire outlet direction

Ⓒ Lead wire length

Code	Description
Ⓐ Output	
2	Proximity 2-wire
3	Proximity 3-wire
Ⓑ Lead wire outlet direction	
H	Axial lead wire
V	Radial lead wire
Ⓒ Lead wire length	
Blank	1 m (standard)
3	3 m (option)
5	5 m (option)

⚠ Precautions for model selection

For the hand, 1 cylinder switch can be mounted in a separate groove to confirm whether the finger (jaw) is open or closed, regardless of whether analog or switch output is used. Order separately when required.

LCM
LCR
LCG
LCW
LCX
STM
STG
STS/STL
STR2
UCA2
ULK*
JSK/M2
JSG
JSC3/JSC4
USSD
UFCD
USC
UB
JSB3
LMB
LML
HCM
HCA
LBC
CAC4
UCAC2
CAC-N
UCAC-N
RCS2
RCC2
PCC
SHC
MCP
GLC
MFC
BBS
RRC
GRC
RV3*
NHS
HRL
LN
Hand
Chuk
MecHnd/Chuk
ShkAbs
FJ
FK
SpdContr
Ending

Dimensions

BHA-LN (amplifier separated)

● BHA-LN-01CS

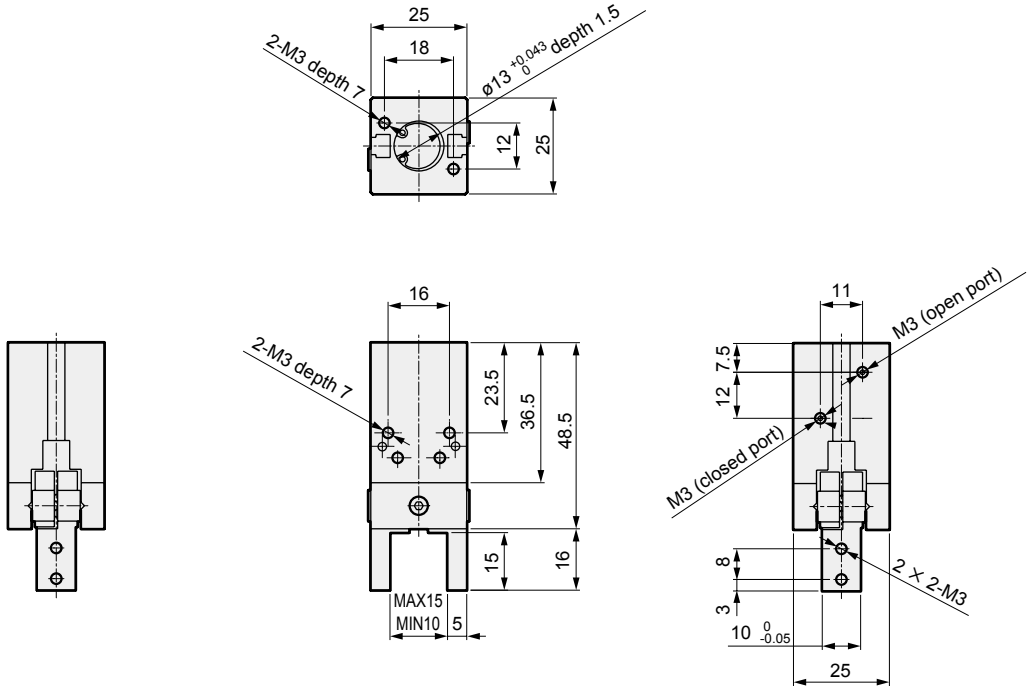

*1 : Longitudinal direction is 3 mm longer than standard products. Other dimensions are the same as standard products.
*2 : Refer to pages 1472 and 1473 for outline dimensions of the sensor, amplifier (separated), and display.
*3 : Only the cylinder bore size code 04CS/05CS can be mounted on display or analog output models.

● BHA-LN-03CS

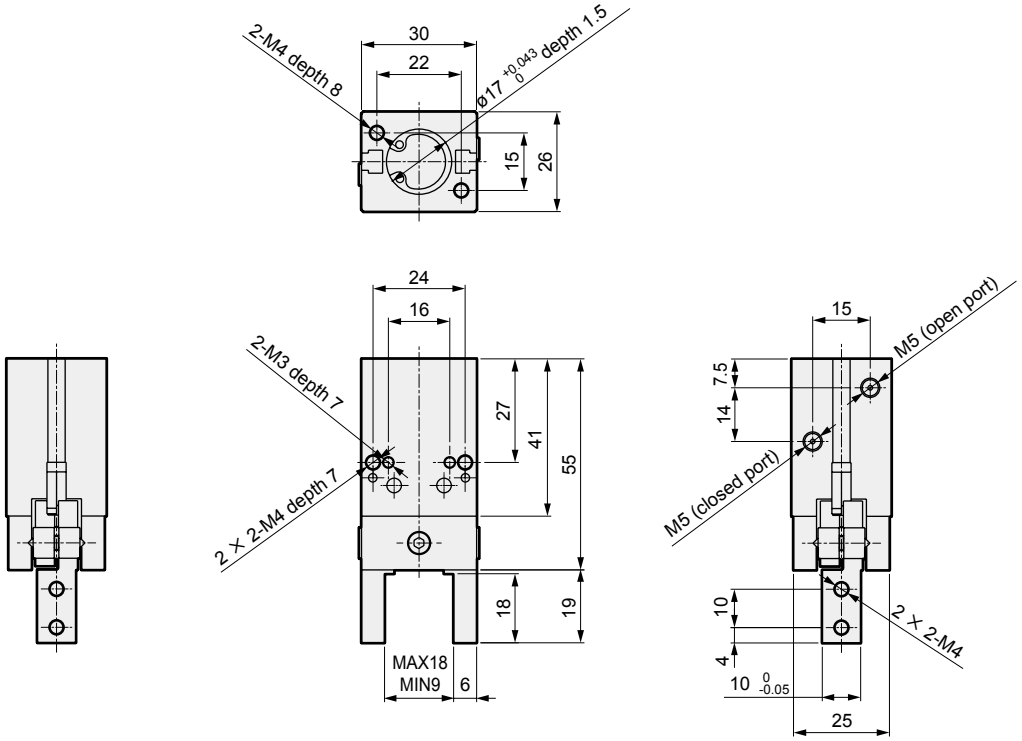

*1 : Longitudinal direction is 2 mm longer than standard products. Other dimensions are the same as standard products.
*2 : Refer to pages 1472 and 1473 for outline dimensions of the sensor, amplifier (separated), and display.
*3 : Only the cylinder bore size code 04CS/05CS can be mounted on display or analog output models.

Dimensions

● BHA-LN-04CS

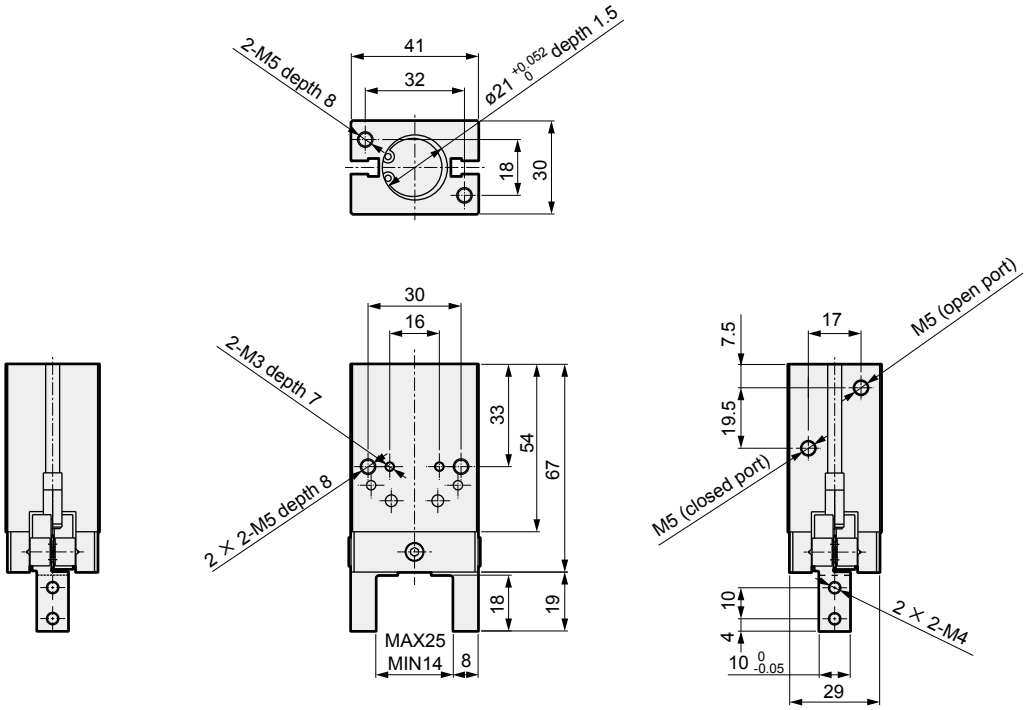

*1 : Longitudinal direction is 5 mm longer than standard products. Other dimensions are the same as standard products.
*2 : Refer to pages 1472 and 1473 for outline dimensions of the sensor, amplifier (separated), and display.

● BHA-LN-05CS

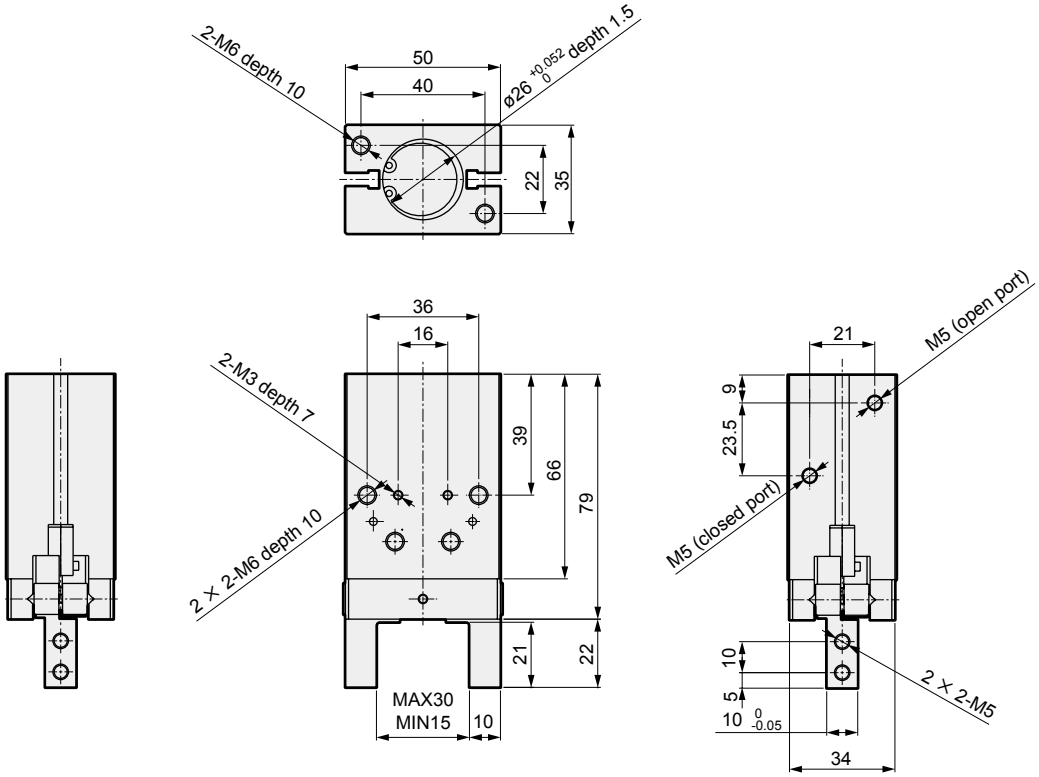

*1 : Longitudinal direction is 5 mm longer than standard products. Other dimensions are the same as standard products.
*2 : Refer to pages 1472 and 1473 for outline dimensions of the sensor, amplifier (separated), and display.

LCM
LCR
LCG
LCW
LCX
STM
STG
STS/STL
STR2
UCA2
ULK*
JSK/M2
JSG
JSC3/JSC4
USSD
UFCD
USC
UB
JSB3
LMB
LML
HCM
HCA
LBC
CAC4
UCAC2
CAC-N
UCAC-N
RCS2
RCC2
PCC
SHC
MCP
GLC
MFC
BBS
RRC
GRC
RV3*
NHS
HRL
LN
Hand
Chuk
MecHnd/Chuk
ShkAbs
FJ
FK
SpdContr
Ending

Dimensions

BHA-LN (amplifier with amplifier installed sensor)

● BHA-LN-01CS diagram

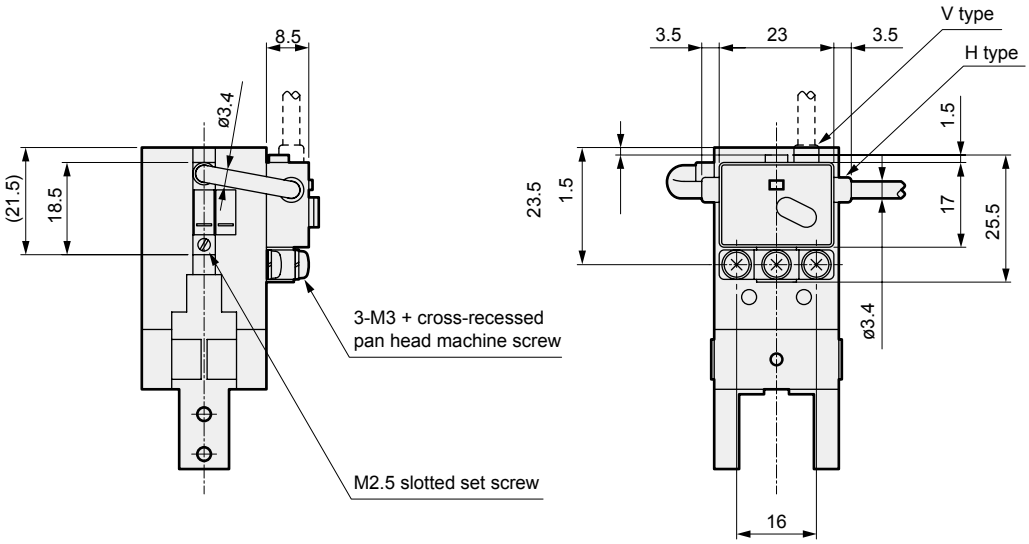

*1 : Refer to the amplifier separated dimensions for details on the hand's outline dimensions.
*2 : The V sensor lead wire direction is used. H or V can be selected for the output stage lead.

● BHA-LN-03CS diagram

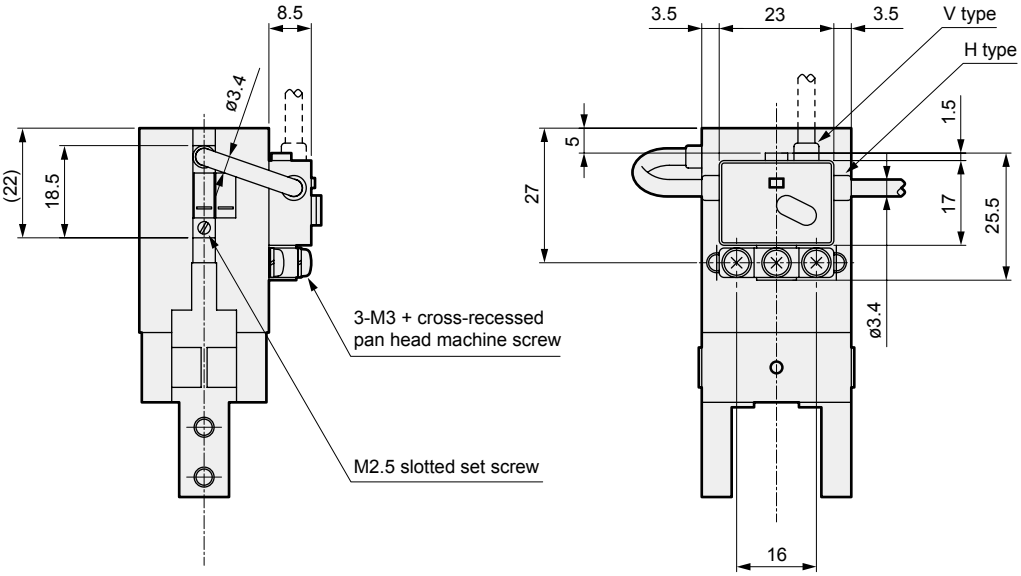

*1: Refer to the amplifier separated dimensions for details on the hand's outline dimensions.
*2: The V sensor lead wire direction is used. H or V can be selected for the output stage lead.

Dimensions

● BHA-LN-04CS diagram

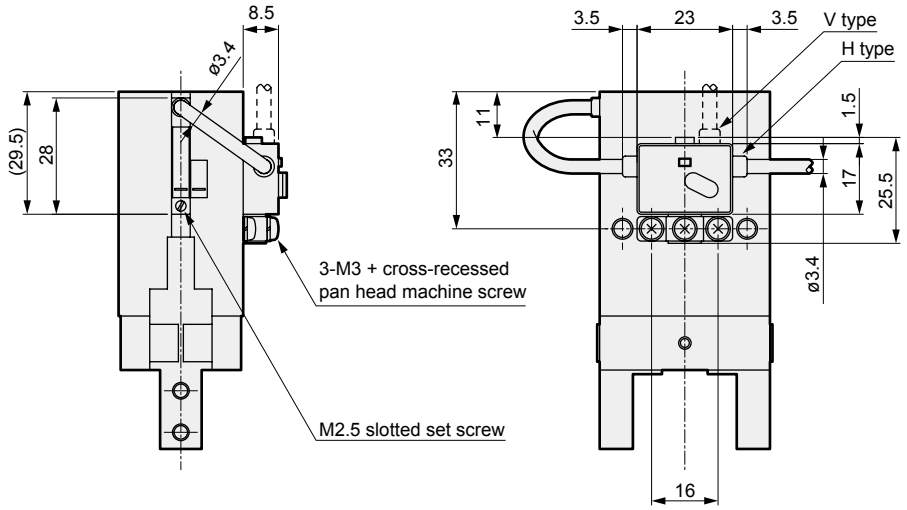

*1 : Refer to the amplifier separated dimensions for details on the hand's outline dimensions.
*2 : The V sensor lead wire direction is used. H or V can be selected for the output stage lead.

● BHA-LN-05CS diagram

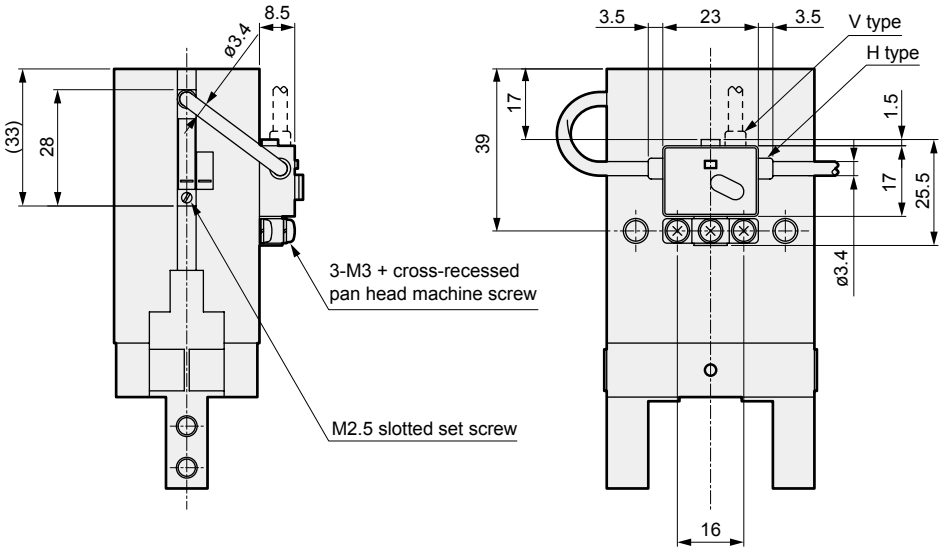

*1 : Refer to the amplifier separated dimensions for details on the hand's outline dimensions.
*2 : The V sensor lead wire direction is used. H or V can be selected for the output stage lead.

LCM
LCR
LCG
LCW
LCX
STM
STG
STS/STL
STR2
UCA2
ULK*
JSK/M2
JSG
JSC3/JSC4
USSD
UFCD
USC
UB
JSB3
LMB
LML
HCM
HCA
LBC
CAC4
UCAC2
CAC-N
UCAC-N
RCS2
RCC2
PCC
SHC
MCP
GLC
MFC
BBS
RRC
GRC
RV3*
NHS
HRL
LN
Hand
Chuk
MecHnd/Chuk
ShkAbs
FJ
FK
SpdContr
Ending

Dimensions

BHG-LN (amplifier separated)

● BHG-LN-01CS

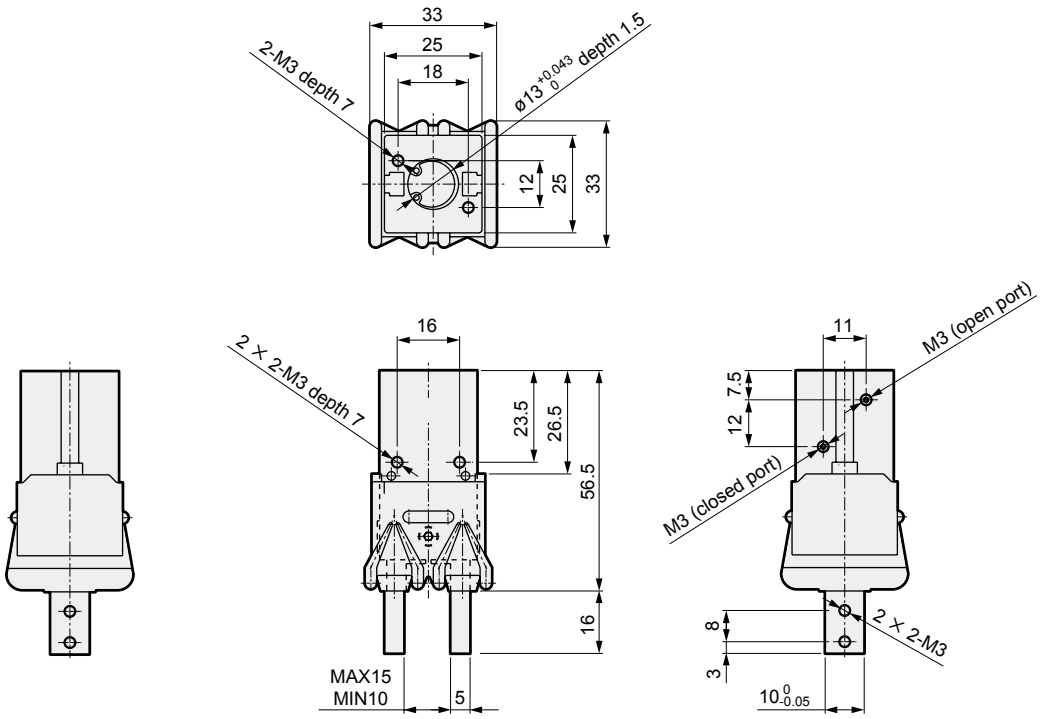

*1 : Longitudinal direction is 3 mm longer than standard products. Other dimensions are the same as standard products.
*2 : Refer to pages 1472 and 1473 for outline dimensions of the sensor, amplifier (separated), and display.
*3 : Only the cylinder bore size code 04CS/05CS can be mounted on display or analog output models.

● BHG-LN-03CS

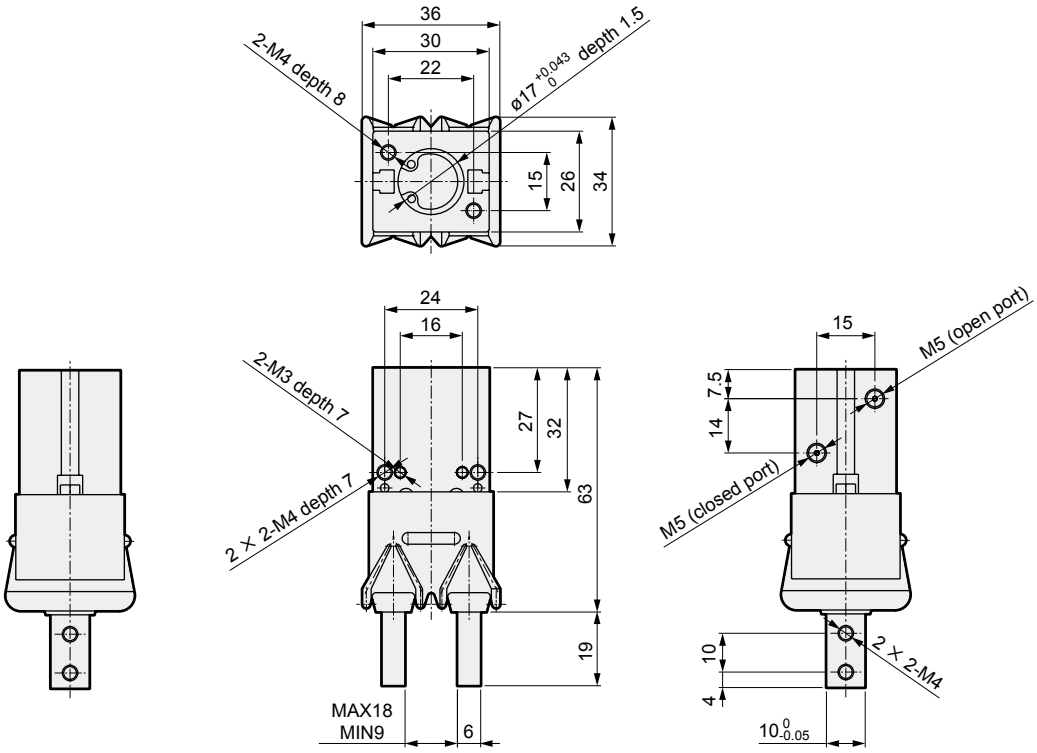

*1 : Longitudinal direction is 2 mm longer than standard products. Other dimensions are the same as standard products.
*2 : Refer to pages 1472 and 1473 for outline dimensions of the sensor, amplifier (separated), and display.
*3 : Only the cylinder bore size code 04CS/05CS can be mounted on display or analog output models.

Dimensions

● BHG-LN-04CS

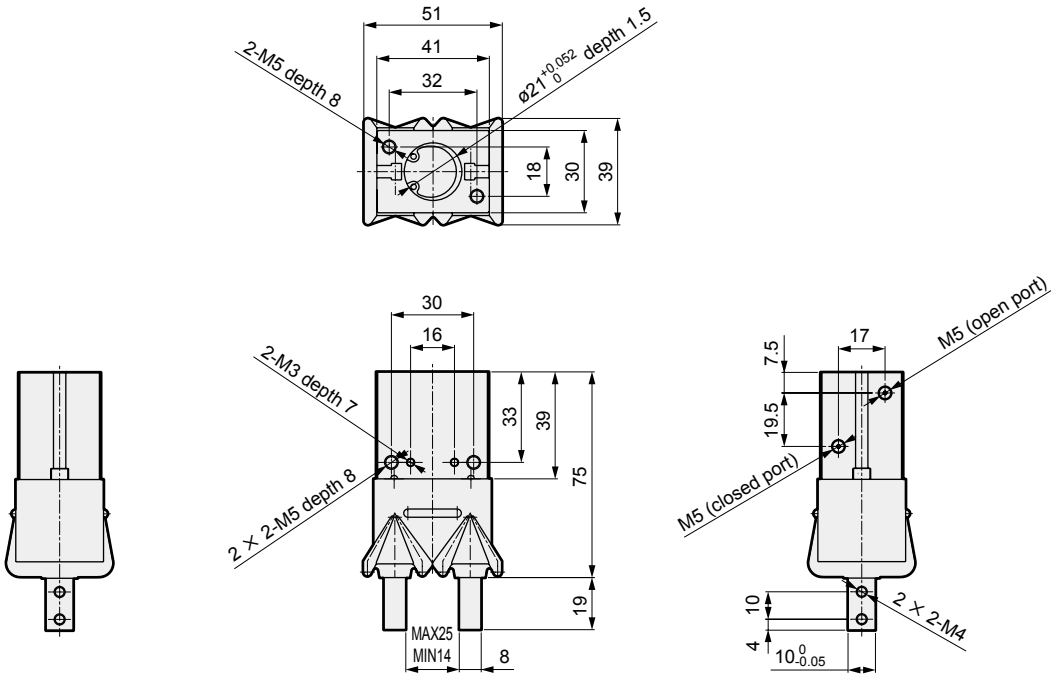

*1 : Longitudinal direction is 5 mm longer than standard products. Other dimensions are the same as standard products.
*2 : Refer to pages 1472 and 1473 for outline dimensions of the sensor, amplifier (separated), and display.

● BHG-LN-05CS

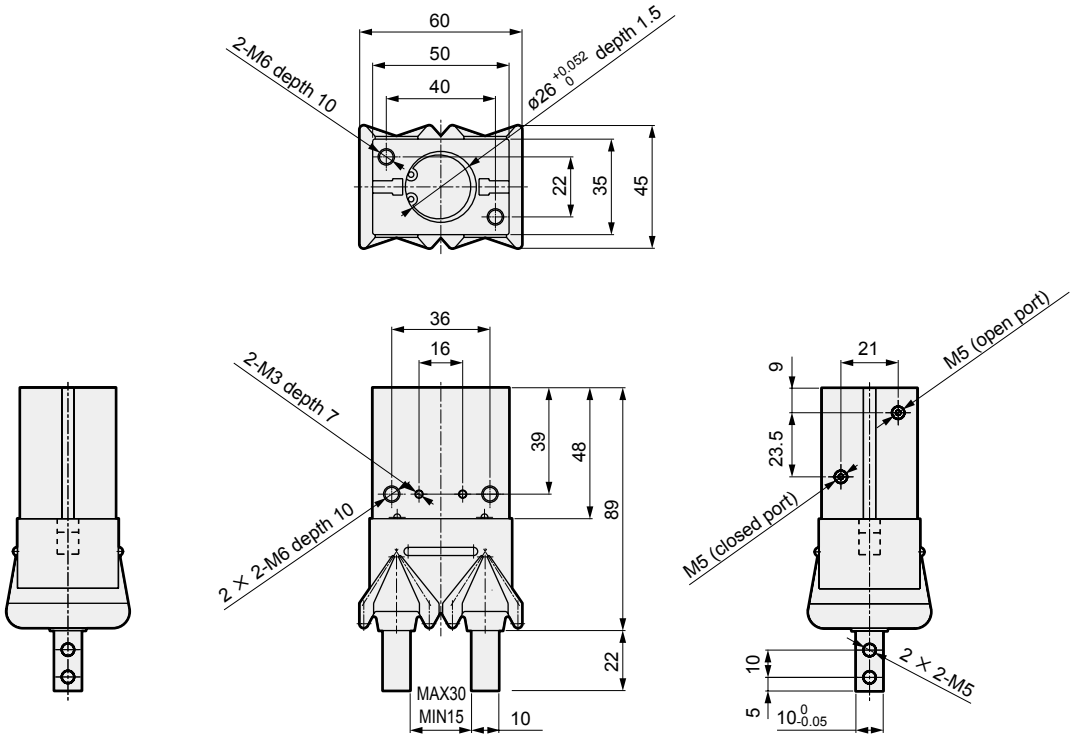

*1 : Longitudinal direction is 5 mm longer than standard products. Other dimensions are the same as standard products.
*2 : Refer to pages 1472 and 1473 for outline dimensions of the sensor, amplifier (separated), and display.

LCM
LCR
LCG
LCW
LCX
STM
STG
STS/STL
STR2
UCA2
ULK*
JSK/M2
JSG
JSC3/JSC4
USSD
UFCD
USC
UB
JSB3
LMB
LML
HCM
HCA
LBC
CAC4
UCAC2
CAC-N
UCAC-N
RCS2
RCC2
PCC
SHC
MCP
GLC
MFC
BBS
RRC
GRC
RV3*
NHS
HRL
LN
Hand
Chuk
MecHnd/Chuk
ShkAbs
FJ
FK
SpdContr
Ending

Dimensions

BHG-LN (amplifier with amplifier installed sensor)

● BHG-LN-01CS diagram

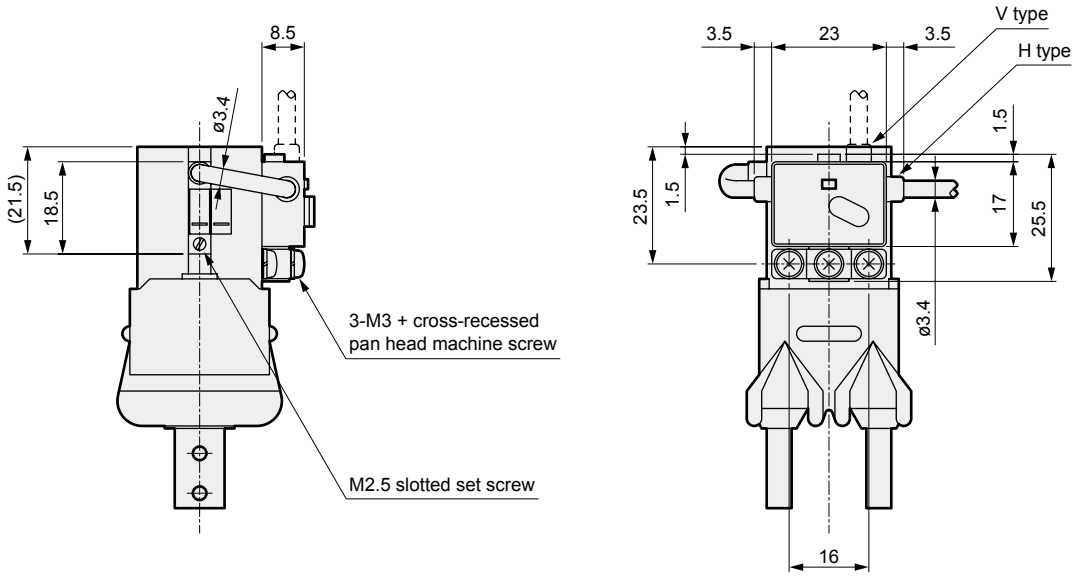

*1 : Refer to the amplifier separated dimensions for details on the hand's outline dimensions.
*2 : The V sensor lead wire direction is used. H or V can be selected for the output stage lead.

● BHG-LN-03CS diagram

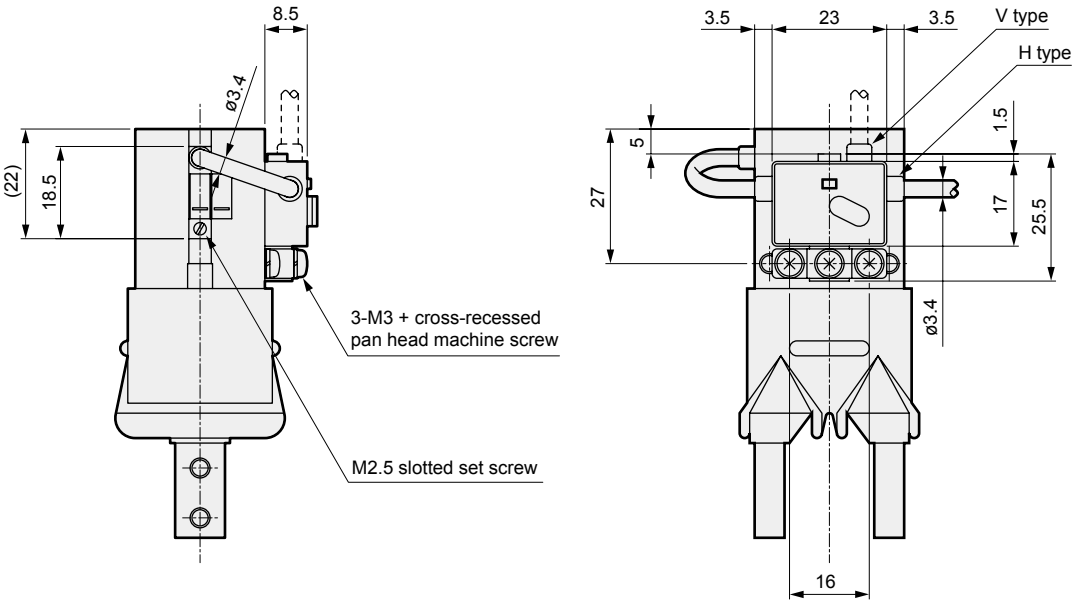

*1 : Refer to the amplifier separated dimensions for details on the hand's outline dimensions.
*2 : The V sensor lead wire direction is used. H or V can be selected for the output stage lead.

LCM
LCR
LCG
LCW
LCX
STM
STG
STS/STL
STR2
UCA2
ULK*
JSK/M2
JSG
JSC3/JSC4
USSD
UFCD
USC
UB
JSB3
LMB
LML
HCM
HCA
LBC
CAC4
UCAC2
CAC-N
UCAC-N
RCS2
RCC2
PCC
SHC
MCP
GLC
MFC
BBS
RRC
GRC
RV3*
NHS
HRL
LN
Hand
Chuk
MecHnd/Chuk
ShkAbs
FJ
FK
SpdContr
Ending

Dimensions

● BHG-LN-04CS diagram

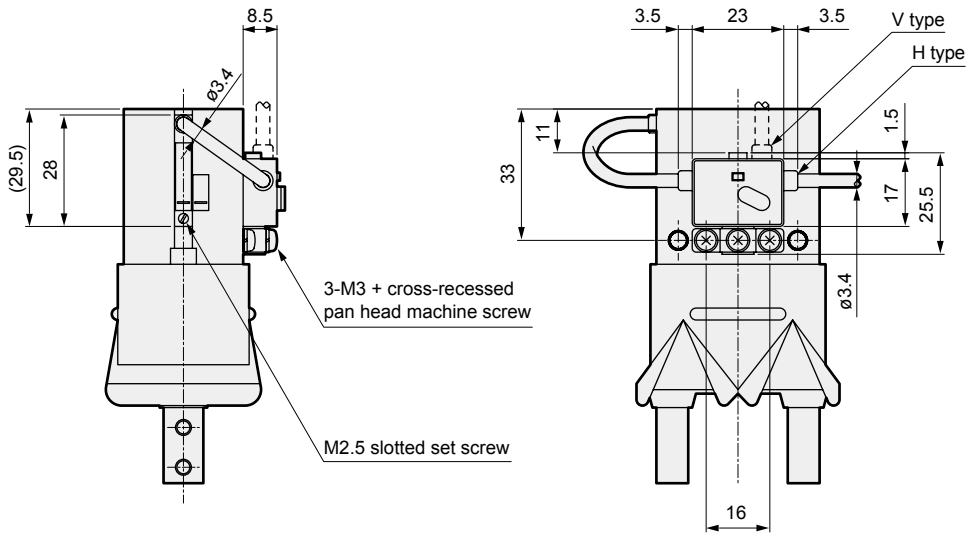

*1 : Refer to the amplifier separated dimensions for details on the hand's outline dimensions.
*2 : The V sensor lead wire direction is used. H or V can be selected for the output stage lead.

● BHG-LN-05CS diagram

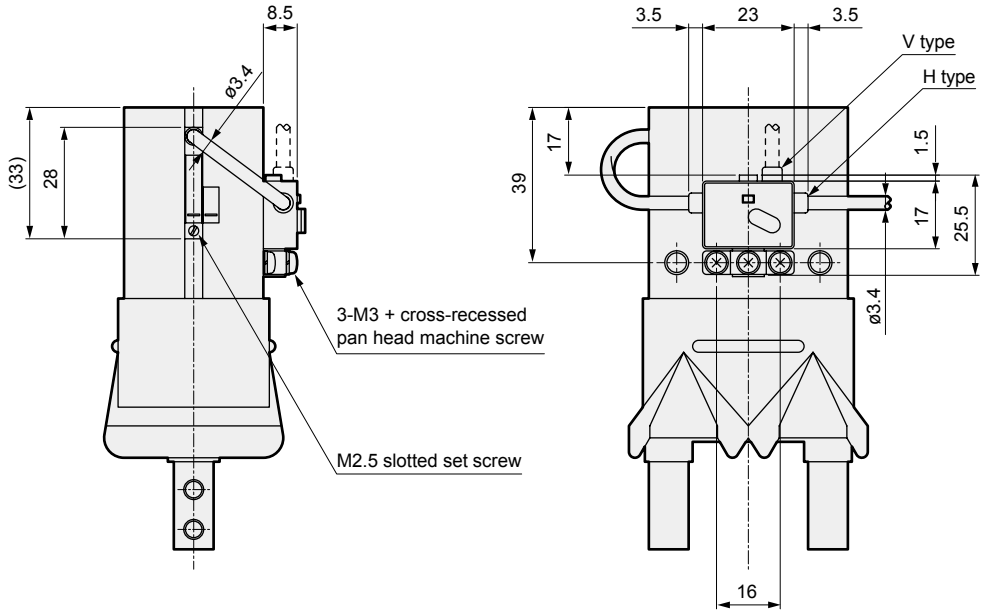

*1 : Refer to the amplifier separated dimensions for details on the hand's outline dimensions.
*2 : The V sensor lead wire direction is used. H or V can be selected for the output stage lead.

LCM
LCR
LCG
LCW
LCX
STM
STG
STS/STL
STR2
UCA2
ULK*
JSK/M2
JSG
JSC3/JSC4
USSD
UFCD
USC
UB
JSB3
LMB
LML
HCM
HCA
LBC
CAC4
UCAC2
CAC-N
UCAC-N
RCS2
RCC2
PCC
SHC
MCP
GLC
MFC
BBS
RRC
GRC
RV3*
NHS
HRL
LN
Hand
Chuk
MecHnd/Chuk
ShkAbs
FJ
FK
SpdContr
Ending

Dimensions

BHE-LN (amplifier separated)

● BHE-LN-01CS

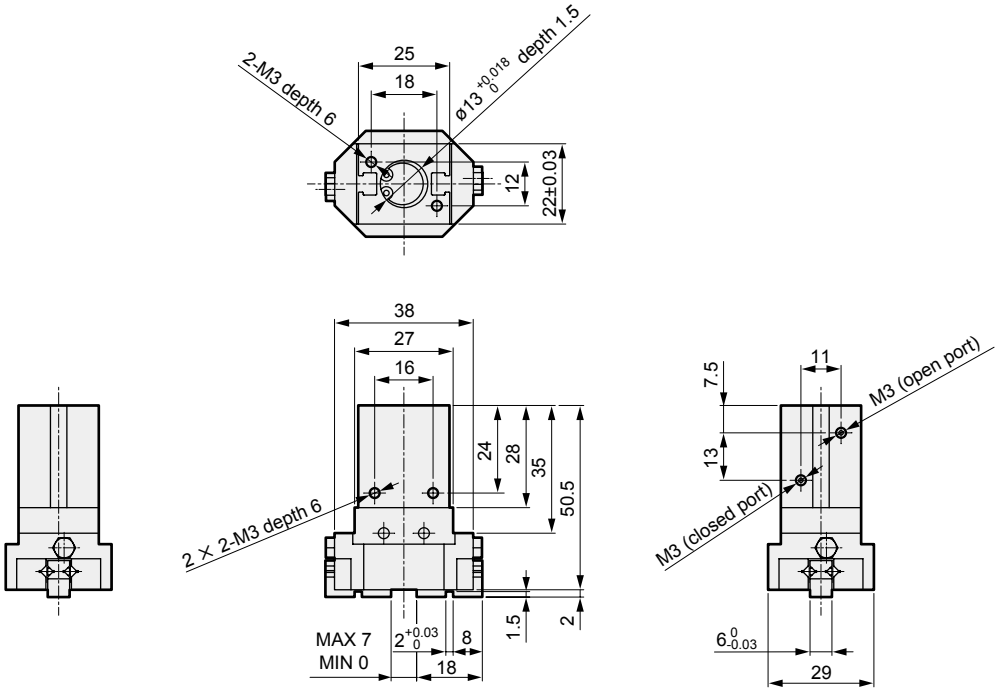

*1 : Longitudinal direction is 3 mm longer than standard products. Other dimensions are the same as standard products.
*2 : Refer to pages 1472 and 1473 for outline dimensions of the sensor, amplifier (separated), and display.
*3 : Only the cylinder bore size code 04CS/05CS can be mounted on display or analog output models.

● BHE-LN-03CS

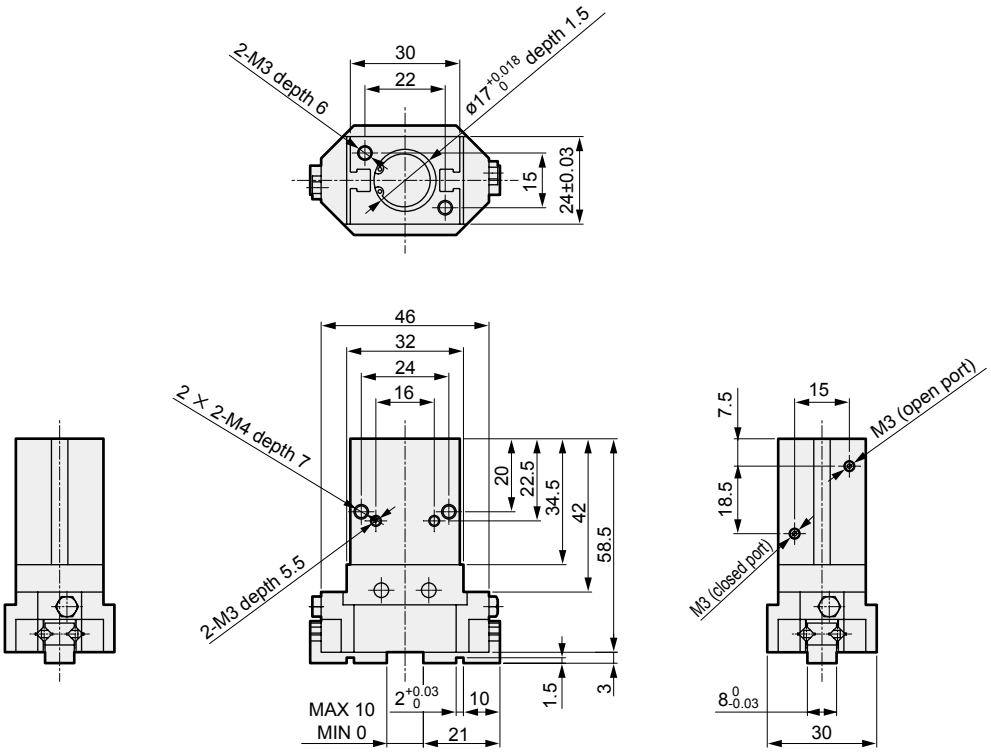

*1 : Longitudinal direction is 6.5 mm longer than standard products. Other dimensions are the same as standard products.
*2 : Refer to pages 1472 and 1473 for outline dimensions of the sensor, amplifier (separated), and display.
*3 : Only the cylinder bore size code 04CS/05CS can be mounted on display or analog output models.

Dimensions

● BHE-LN-04CS

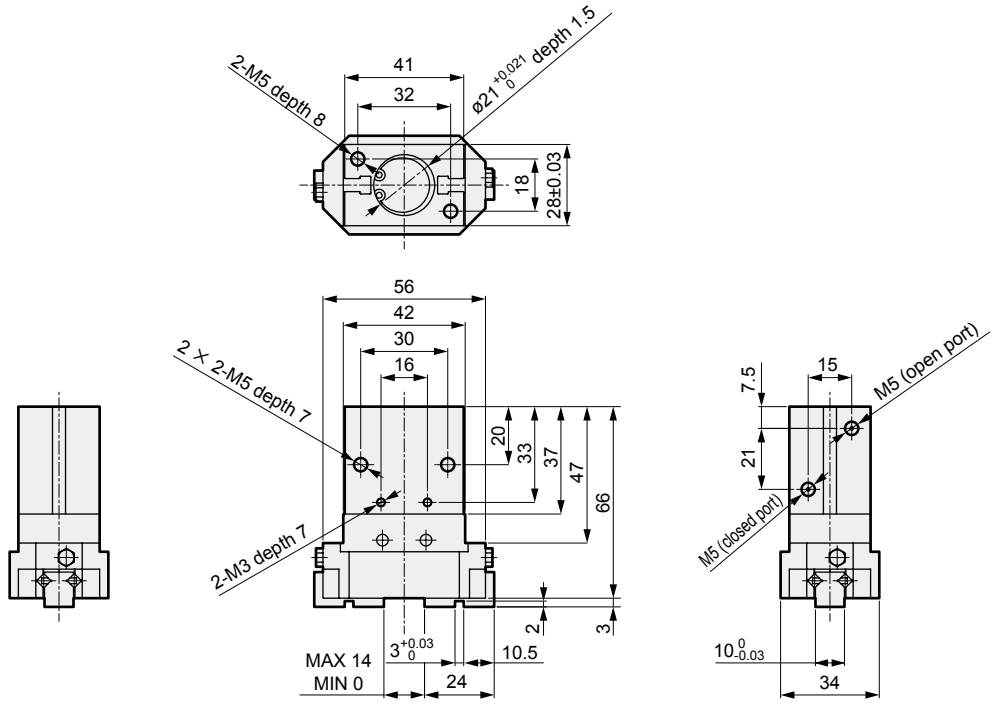

*1 : Longitudinal direction is 5 mm longer than standard products. Other dimensions are the same as standard products.
*2 : Refer to pages 1472 and 1473 for outline dimensions of the sensor, amplifier (separated), and display.

● BHE-LN-05CS

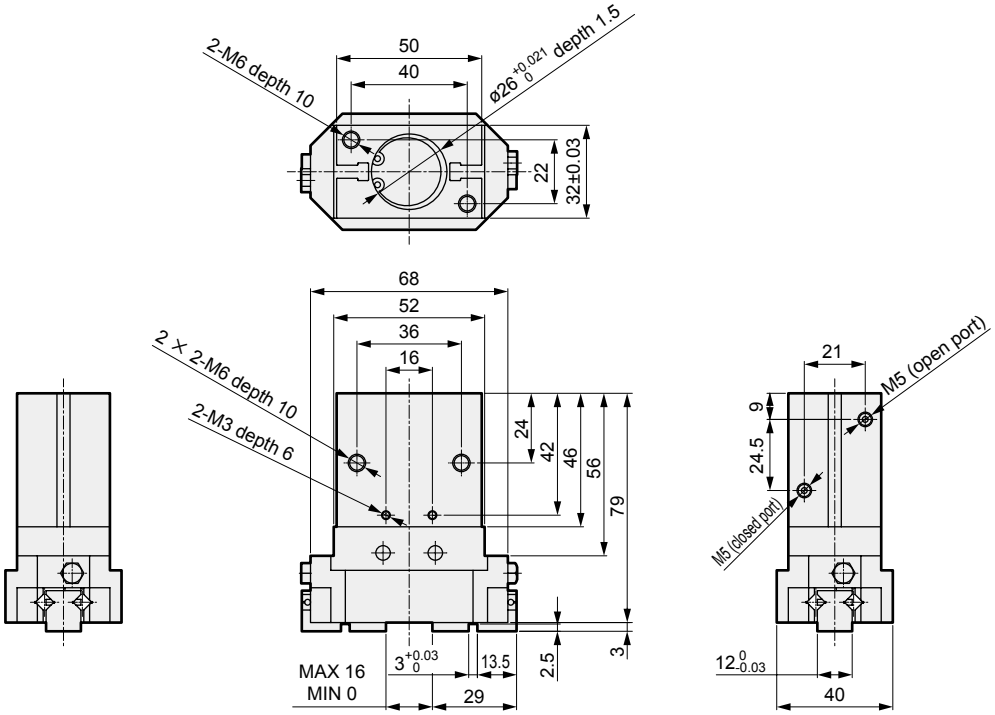

*1 : Longitudinal direction is 5 mm longer than standard products. Other dimensions are the same as standard products.
*2 : Refer to pages 1472 and 1473 for outline dimensions of the sensor, amplifier (separated), and display.

LCM
LCR
LCG
LCW
LCX
STM
STG
STS/STL
STR2
UCA2
ULK*
JSK/M2
JSG
JSC3/JSC4
USSD
UFCD
USC
UB
JSB3
LMB
LML
HCM
HCA
LBC
CAC4
UCAC2
CAC-N
UCAC-N
RCS2
RCC2
PCC
SHC
MCP
GLC
MFC
BBS
RRC
GRC
RV3*
NHS
HRL
LN
Hand
Chuk
MecHnd/Chuk
ShkAbs
FJ
FK
SpdContr
Ending

Dimensions

BHE-LN (amplifier with amplifier installed sensor)

● BHE-LN-01CS diagram

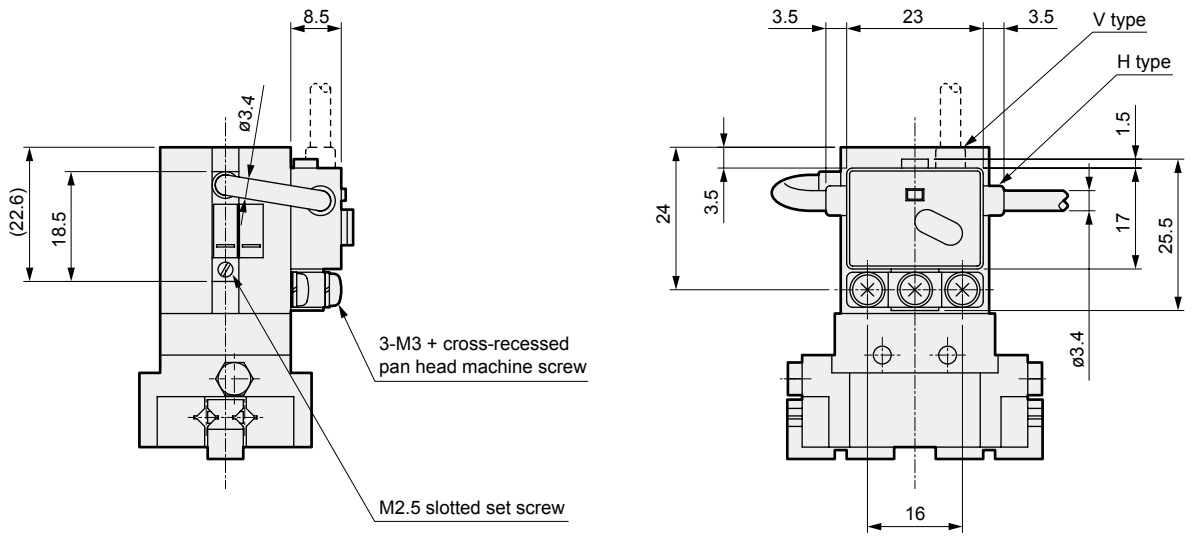

*1 : Refer to the amplifier separated dimensions for details on the hand's outline dimensions.
*2 : The V sensor lead wire direction is used. H or V can be selected for the output stage lead.

● BHE-LN-03CS diagram

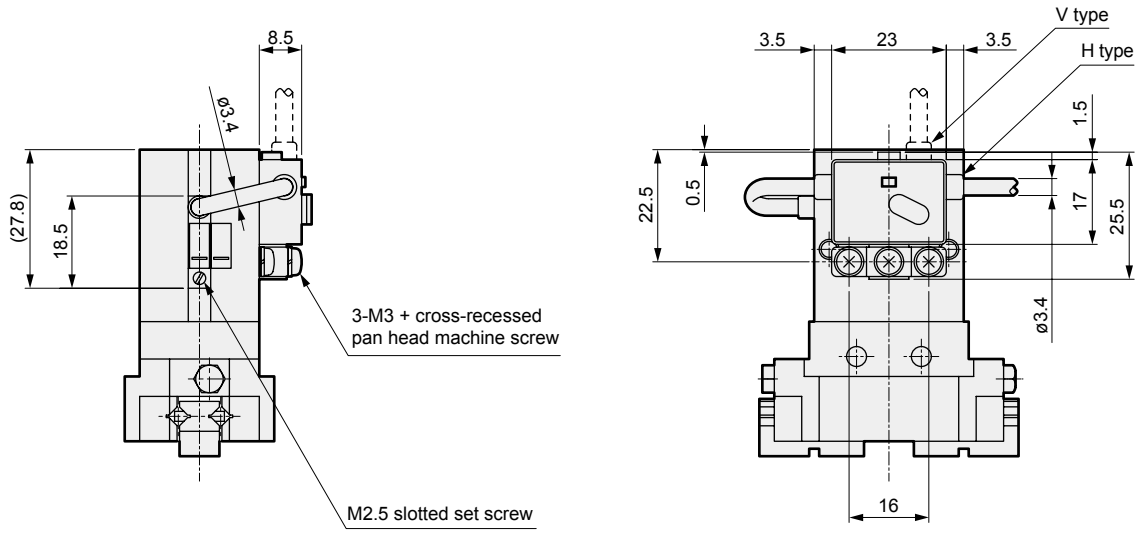

*1 : Refer to the amplifier separated dimensions for details on the hand's outline dimensions.
*2 : The V sensor lead wire direction is used. H or V can be selected for the output stage lead.

Dimensions

● BHE-LN-04CS diagram

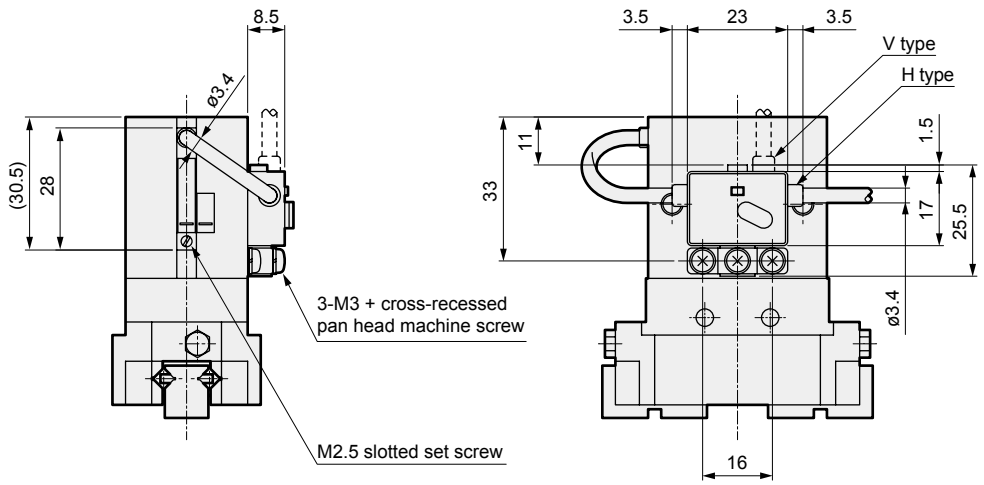

*1 : Refer to the amplifier separated dimensions for details on the hand's outline dimensions.
*2 : The V sensor lead wire direction is used. H or V can be selected for the output stage lead.

● BHE-LN-05CS diagram

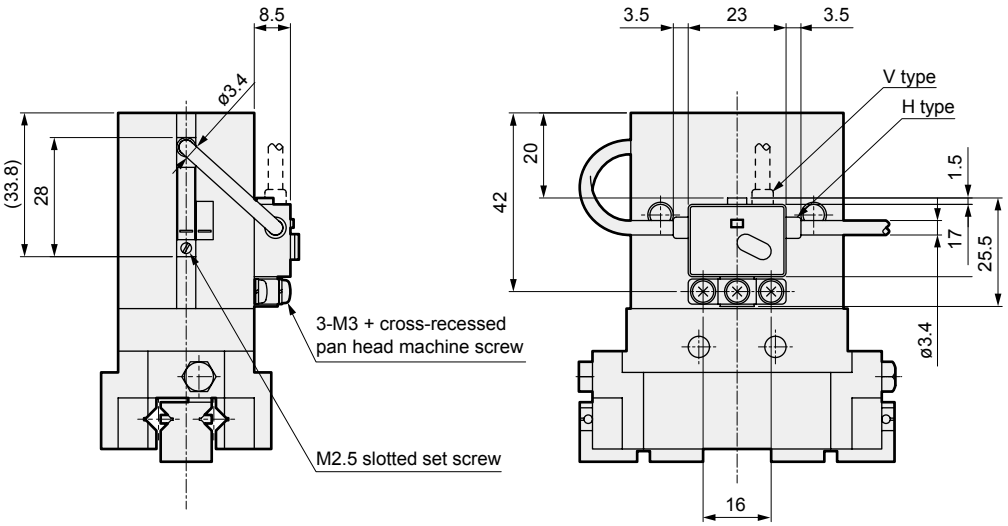

*1 : Refer to the amplifier separated dimensions for details on the hand's outline dimensions.
*2 : The V sensor lead wire direction is used. H or V can be selected for the output stage lead.

LCM
LCR
LCG
LCW
LCX
STM
STG
STS/STL
STR2
UCA2
ULK*
JSK/M2
JSG
JSC3/JSC4
USSD
UFCD
USC
UB
JSB3
LMB
LML
HCM
HCA
LBC
CAC4
UCAC2
CAC-N
UCAC-N
RCS2
RCC2
PCC
SHC
MCP
GLC
MFC
BBS
RRC
GRC
RV3*
NHS
HRL
LN
Hand
Chuk
MecHnd/Chuk
ShkAbs
FJ
FK
SpdContr
Ending

Internal circuit diagram

● Display

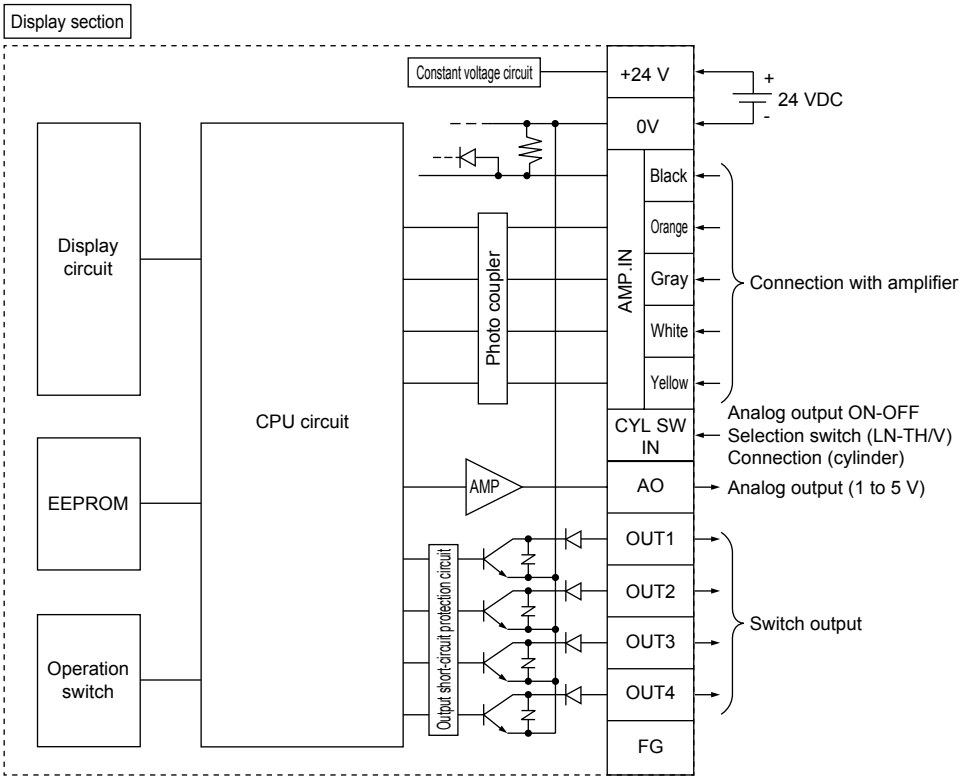

● Output stage transistor ON/OFF during piston detection can be selected with the operation switch.

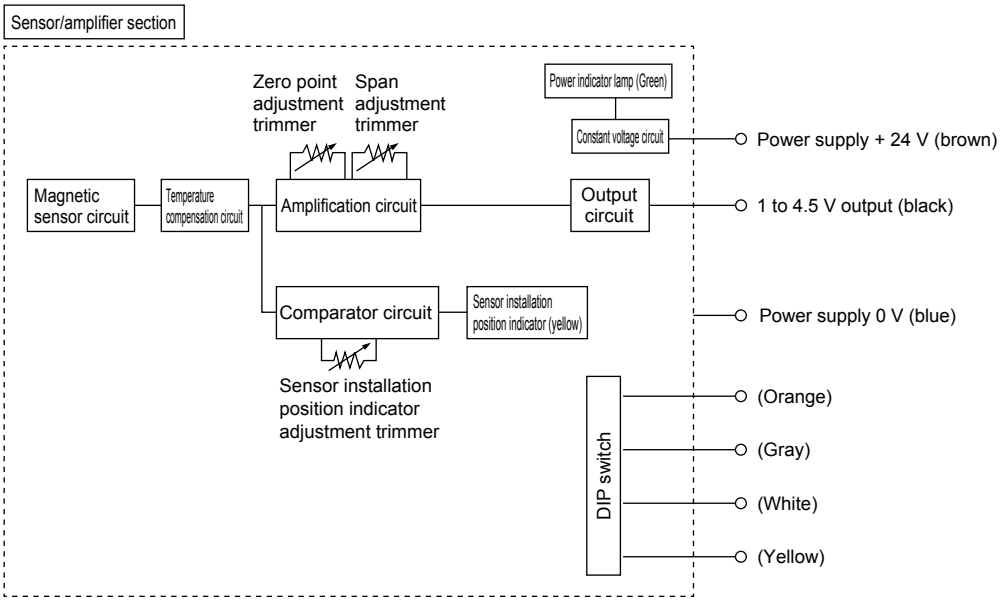

Internal circuit diagram

● Analog output

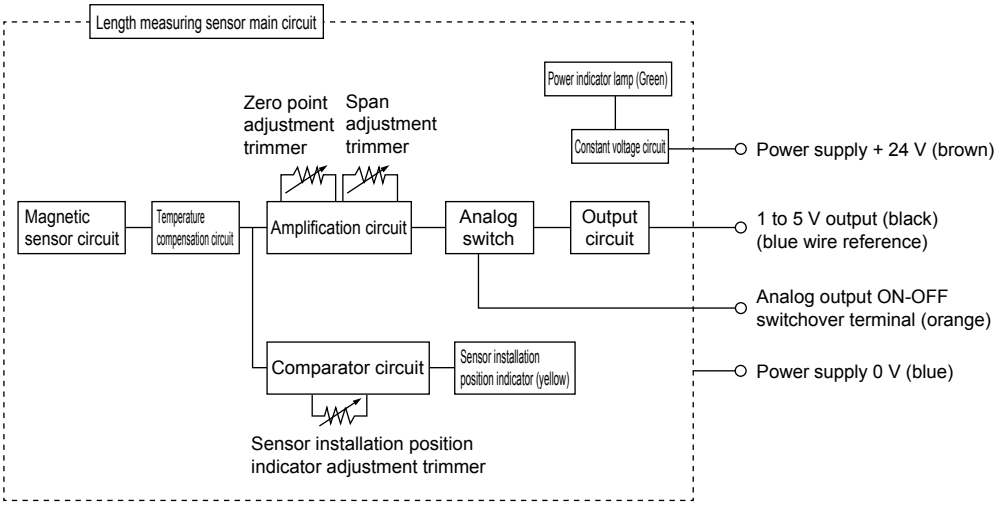

● Switch output, amplifier separated

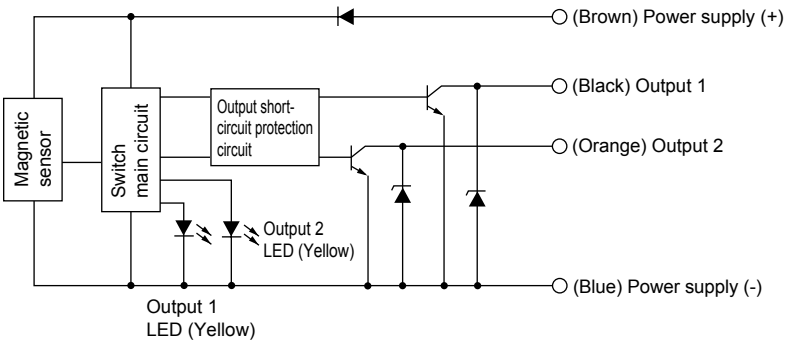

● The output step transistor is turned ON during piston detection.

● Switch output, amplifier mounting

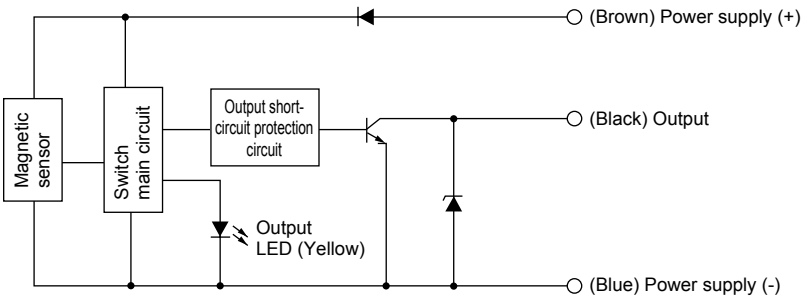

● The output step transistor is turned ON during piston detection.

When analog output cylinder is installed

When adjusting the sensor installation position or analog output voltage, a workpiece (reference) should be provided so that the piston stops 4 mm from the protruding end and from the retracting end, with the measured range length center and alignment center as reference. Air pressure should be the same as for actual working conditions when making these adjustments.

1 Sensor mounting position adjustment method

At shipment, the sensor is installed within the specified measured range length (example: set to the center if the range is from 8 mm before piston protruding end to protruding end). Follow the following procedures to adjust the position if the sensor installation position has been changed or the measured range length has been changed.

(1) With the sensor removed, move the sensor installation position indicator lamp adjustment trimmer so the sensor installation position indicator (yellow LED) turns ON. Set the trimmer to the center of the interval at which the yellow LED turns ON. (As this is adjusted before the product is shipped, implement even if the trimmer has been moved inadvertently.)

(2) Move the cylinder piston to the center of the measured length range.

(3) Install the sensor on the cylinder. Fix the sensor in a position allowing the following operations in the direction of insertion. Sensor tightening torque is 0.1 to 0.2 N·m. Install the sensor case so the sensor set screw (M2.5 slotted set screw) faces the cylinder head side.

① Insertion from rod side
Fix at the center of the second lighting interval, including where the sensor mounting position indicator turns ON at (1). (Lights for the second time at a short interval equivalent to approx. 1 mm of piston stroke)

② Insertion from head side
Fix at the center of the second lighting interval, including where the sensor mounting position indicator turns ON at (1). (Lights for the second time at a short interval equivalent to approx. 1 mm of piston stroke)

(4) When the piston stroke of the cylinder on which the sensor is installed is longer than 8 mm, and the length is measured within an 8 mm stroke range of that stroke, connect a cylinder switch T0H/V across the orange and blue wires so that unnecessary analog output voltages are not output outside the measured range length. (When the stroke length is 8 mm or less, it will be short-circuited across the orange and blue wires.) As with the conventional cylinder switch, perform step (2) above, and then position this switch between ON points. The tightening torque of the switch is 0.1 to 0.2 N·m.

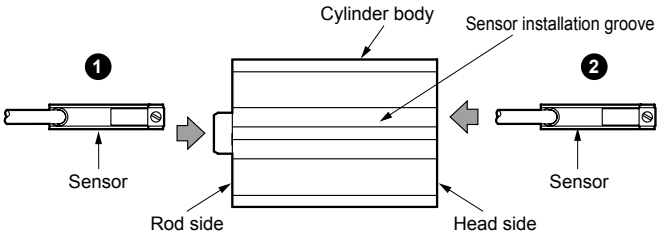

2 Analog output voltage adjustment method

The analog output voltage is output at 8 mm in front of the piston protruding end, for example, if the specified measured range length is adjusted to 5 V at 8 mm in front of the protruding end and 1 V at the protruding end. However, the voltage may vary slightly due to the working environment (affected by magnets in the area), so perform fine adjustments with the following procedure.

(1) Connect the brown output stage lead to the (+) side of the 24 VDC stabilized power, the orange lead to the brown wire for cylinder switch T0H/V, and both blue wires to the (-) side of the power supply.

(2) Connect the black wire to the (+) side of the voltmeter and the blue wire to the (-) side of the voltmeter.

(3) Move the cylinder piston, and read the voltage value at the length measuring range start (example: 8 mm in front of projecting end) and end (example: projecting end).

(4) If the voltage difference in (2) is 4 V or less, turn the span adjustment trimmer slightly clockwise. At 4 V or more, move the trimmer slightly counterclockwise.

(5) Move the cylinder piston again, and read the voltage at the start and end of the length measuring range. Adjust the zero point adjustment trimmer so the reading is 5 V with the start as a reference, and 1 V when using the end as a reference.

(6) Repeat steps (3), (4) and (5) several times, and perform fine adjustments.

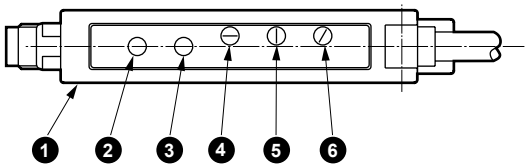

1. Amplifier unit case
2. Power indicator lamp
3. Sensor installation position indicator
4. Sensor installation position indicator adjustment trimmer
5. Zero point adjustment trimmer
6. Span adjustment trimmer

When analog output hand is installed

1 Sensor mounting position adjustment method

Before shipment, the sensor is installed at the center of the stroke for both fingers (jaws). Follow the following procedures to adjust the position if the sensor installation position has been changed or the hand has been replaced.

(1) With the sensor removed, move the sensor installation position indicator lamp adjustment trimmer so the sensor installation position indicator (yellow LED) turns ON. Set the trimmer to the center of the interval at which the yellow LED turns ON. (As this is adjusted before the product is shipped, implement even if the trimmer has been moved inadvertently.)

(2) Move the hand finger (jaw) to the center of the stroke.

(3) Install the sensor on the hand. Fix the sensor in a position allowing the following operations. Sensor tightening torque is 0.1 to 0.2 N·m. Install the sensor case so the sensor installation screw (M2.5 slotted set screw) faces the finger (jaw).

① Sensor installation position

Fix at the center of the second lighting interval, including where the sensor mounting position indicator turns ON at (1). (Lights for the second time at a short interval equivalent to approx. 1 mm of piston stroke)

2 Analog output voltage adjustment method

The analog output voltage is adjusted so the finger (jaw) full stroke is 5 V when open and 1 V when closed. However, the voltage may slightly vary due to the working environment (affected by magnetic bodies in the area), so adjust finely with the following procedures.

(1) Connect the brown wire to the (+) side of the 24 VDC stabilized power, and the blue and orange wires to the (-) side.

(2) Connect the black wire to the (+) side of the voltmeter and the blue wire to the (-) side of the voltmeter.

(3) Move the finger, and read the voltage value when open and closed.

(4) If the voltage difference in (3) is 4 V or less, turn the span adjustment trimmer slightly clockwise. At 4 V or more, move the trimmer slightly counterclockwise.

(5) Move the finger again, and read voltage when open and closed. Adjust the zero point adjustment trimmer so the reading is 5 V with the open state as a reference, and 1 V with the closed state as a reference.

(6) Repeat steps (3), (4) and (5) several times, and perform fine adjustments.

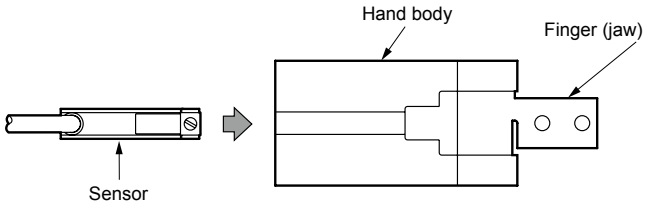

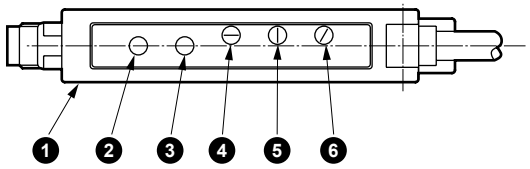

1. Amplifier unit case
2. Power indicator lamp
3. Sensor installation position indicator
4. Sensor installation position indicator adjustment trimmer
5. Zero point adjustment trimmer
6. Span adjustment trimmer

LCM
LCR
LCG
LCW
LCX
STM
STG
STS/STL
STR2
UCA2
ULK*
JSK/M2
JSG
JSC3/JSC4
USSD
UFCD
USC
UB
JSB3
LMB
LML
HCM
HCA
LBC
CAC4
UCAC2
CAC-N
UCAC-N
RCS2
RCC2
PCC
SHC
MCP
GLC
MFC
BBS
RRC
GRC
RV3*
NHS
HRL
LN
Hand
Chuk
MecHnd/Chuk
ShkAbs
FJ
FK
SpdContr
Ending

Switch output

1 Sensor mounting position adjustment method

Before shipment, the sensor is installed at the center of the stroke for both fingers (jaws). Follow the following procedures to adjust the position if the sensor installation position has been changed or the hand has been replaced.

(1) Align the red lines on the sensor and hand, and tighten with a sensor tightening torque of 0.1 to 0.2 N·m.

(2) Be sure to install the sensor so the set screw (M2.5 slotted set screw) faces the finger (jaw).

Amplifier separated

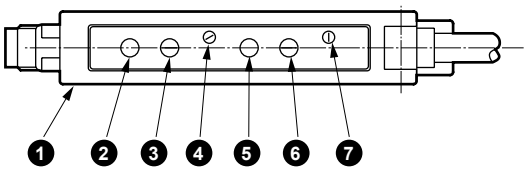

❶ Amplifier unit case
❷ Output 1 indicator lamp
❸ Output 1 operating range adjustment trimmer
❹ Output 1 operating point adjustment trimmer
❺ Output 2 indicator lamp
❻ Output 2 operating range adjustment trimmer
❼ Output 2 operating point adjustment trimmer

2 Setting the switch output position

(1) Move the hand's finger (jaw) to the position for switch output.

(2) Turn the operating range adjustment trimmer a half turn clockwise, and then turn slightly clockwise and set it temporarily.

(3) Move the operating point adjustment trimmer and turn output ON. Set the trimmer at the center of the ON interval.

(4) Move the operating range adjustment trimmer, and determine the operating range. The operating range is increased or decreased using the approximate center of the operating points as reference.

(5) Move the finger (jaw) several times and turn the switch output ON and OFF. Repeat steps (3) and (4) and perform fine adjustments.

Amplifier mounting

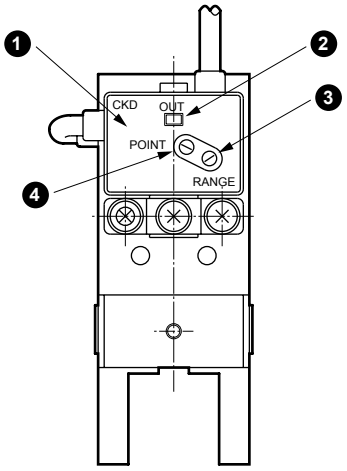

❶ Amplifier unit case
❷ Output indicator lamp
❸ Output operating range adjustment trimmer
❹ Output operating points adjustment trimmer

* Refer to the handling precautions attached with the product for details on adjusting and setting the display.

Pneumatic components

Safety Precautions

Be sure to read this section before use.

Refer to Intro Page 73 for general information of the cylinder, and to Intro Page 80 for general information of the cylinder switch.

Product-specific cautions: Cylinder with length measuring sensor/hand/actuator

Design/selection

1. Hand

⚠CAUTION

- Since gripping power varies with the length of the jaw attached to the finger, applied pressure, bore size, etc., determine according to the workpiece gripped.
- Gripping characteristics are equivalent to the standard. (BHA: page 1602 BHG: page 1608 BHE: page 1755). Check pages 1764 to 1769 for common precautions for the hand.
- Avoid use outdoors.
- The most desirable range of the ambient temperature for use of the hand is 5 to 60°C. Do not use the unit if the temperature exceeds 60°C, or damage and/or misoperations may occur. If the temperature is less than 5°C, moisture in the circuit may freeze and lead to damage or faults. Take measures to prevent freezing.
- Do not use this product in an environment where corrosion may occur. Use in such an environment could lead to damage or operation failure.
- Clamping operation is accurate when performed as softly as possible at a low speed. Repeatability is also stable.
- Check that excessive lateral load is not applied to the finger.
- Selecting models for mixed workpiece sorting applications
  Select the output depending on the appearance differential of the workpiece.
  Workpiece exterior differential ≥ 1 mm + tolerance variation of workpiece: Switch output
  Workpiece exterior differential ≤ 1 mm + tolerance variation of workpiece: Analog output
  *Switch output position setting is approximate for switch output. The above values are reference only, and differ based on the working environment. Contact CKD for details.

Mounting, installation and adjustment

1. Cylinder

⚠CAUTION

- As the SSD-LN, SSD-O-LN Series uses a rotation-stop, do not use where rotation torque is applied to the SSD-LN, SSD-O-LN Series piston rod. The bushing for the rotation lock may deform and significantly shorten the service life.
  Contact CKD for standard piston rod.
- Use the product so that load on the piston rod is always applied in the rod axial direction.
- When fixing a workpiece onto the tip of the SSD-LN, SSD-O-LN Series piston rod, retract the piston rod to the stroke end and apply a wrench to the section protruding from the rod's parallel section. Tighten so that torque is not applied to the cylinder body.
- Note that applicable piping fittings differ based on the cylinder bore size.

· SSD-LN, SSD-O-LN

Item / Bore size (mm)	Port size	Port position A	Port position B	Applicable fittings	Fitting O.D.	Inapplicable fittings
ø12/16	M5×0.8	5.5	5.5	SC3W-M5-4 SC3W-M5-6 GWS4-M5-S GWS4-M5 GWL4-M5 GWL6-M5	ø11 or less	GWS6-M5
ø20		8	5.5			
ø32	Rc1/8	8	8	SC3W-6-4/6/8 GWS4-6 GWS6-6 GWS8-6 GWL4-6 GWL6-6	ø15 or less	GWS10-6 GWL8-6 GWL10-6
ø50	Rc1/4	10.5	10.5	SC3W-8-6/8/10 GWS4-8 GWS6-8 GWS10-8 GWL4 to 12-8	ø21 or less	GWS-12-8

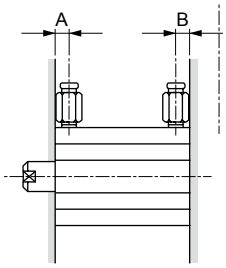

Mounting, installation and adjustment

2. Hand

⚠CAUTION

- To remove moisture in the pipes, attaching an air dryer and filter is recommended. Install a filter near the directional control valve (primary side) to remove rust, foreign matter and drainage.
- Use corrosion-proof materials such as zinc, plated pipes, stainless steel pipes, nylon pipes or rubber pipes for piping material.
- Check that the cross-section of the pipe connecting the hand and directional control valve has sufficient effective cross-sectional area to attain specified piston speed.
- Before piping, clean out the pipes using an air blower to remove all foreign matter and cutting chips from the pipes.
- Check that sealing tape or adhesive does not enter when connecting the pipe to the components (filter, directional control valve, cylinder, hand/chuck, etc.). Snagged sealing tape or cutting chips could lead to operation failure.
- When mounting the jaw to the finger, to prevent any effect on the hand, support with a wrench, etc., when tightening so that the finger is not twisted. The recommended tightening torques (N·m) are as follows.
  BHA/BHG/BHE - 01 : 0.59
  BHA/BHG/BHE - 03, 04 : 1.4
  BHA/BHG/BHE - 05 : 2.8

Use/maintenance

1. Cylinder

⚠CAUTION

- Use appropriate pliers (C type snap ring installation tool) to install and remove the rod metal.
- Even in cases when appropriate pliers are used, be careful as the snap ring may pop out at the tip of the pliers and cause physical or equipment damage.
  In addition, during mounting, be sure that the unit fits securely into the snap ring groove before supplying air.

2. Hand

⚠CAUTION

- Regularly grease the oscillating section of the finger. Regular replenishment can extend service life further.
- Do not apply excessive force caused by dropping or collision to the finger, attachment, or bearing guide. This could cause large play in the finger and decrease the hand's repeatability. The stop position of the piston, which acts as the sensor detector, could vary and decrease repeatability.

LCM
LCR
LCG
LCW
LCX
STM
STG
STS/STL
STR2
UCA2
ULK*
JSK/M2
JSG
JSC3/JSC4
USSD
UFCD
USC
UB
JSB3
LMB
LML
HCM
HCA
LBC
CAC4
UCAC2
CAC-N
UCAC-N
RCS2
RCC2
PCC
SHC
MCP
GLC
MFC
BBS
RRC
GRC
RV3*
NHS
HRL
LN
Hand
Chuk
MecHnd/Chuk
ShkAbs
FJ
FK
SpdContr
Ending

Product-specific cautions: Sensor/amplifier/display

Design/selection

1. Common

⚠ CAUTION

- Use only a DC safety power supply. Do not connect motors, valves, etc., that generate noise to the power supply used in this device.

- While wiring, ensure that inductive noise is not applied to the length measuring sensor and that the motor, etc. power lines do not use the same piping and wiring (through multi-core cables, etc.). Use caution with the inverter power supply and its wiring section as well.
  (Check that the inverter power frame ground is correctly grounded and noise is released.)

- Note that noise resistance performance may be adversely affected if the length of the sensor cable or output stage cable lead wire is changed.

- A bend-resistant lead wire is used for the sensor cable and output stage cable. To optimize bend resistant performance, check that the wire is not bent locally and that tension is not applied.
  Note that compared to the middle section of the load, elasticity drops at the outlet from the sensor case or amplifier unit case and at the M8 connector section because the lead is fixed. Check that repeated bending is not applied to these sections.

- This product cannot be used where the ambient temperature fluctuates suddenly (example: localized air conditioning).

- This product cannot be used outdoors or in an atmosphere containing corrosive elements.

- Select switch output when conducting rough judgments and analog output or display when conducting detailed judgments, including length measurement.

Mounting, installation and adjustment

1. Common

⚠ CAUTION

- This product cannot be used in an environment where strong magnetic fields are generated (spot welding machine, etc.) because the sensor detection accuracy drops markedly.
  Use caution when this cylinder/hand is adjacent to other magnetic switches with cylinder. As a guideline, a distance of 50 mm or more between the sensor surface and cylinder tube surface should be sufficient, as shown in the figure below.

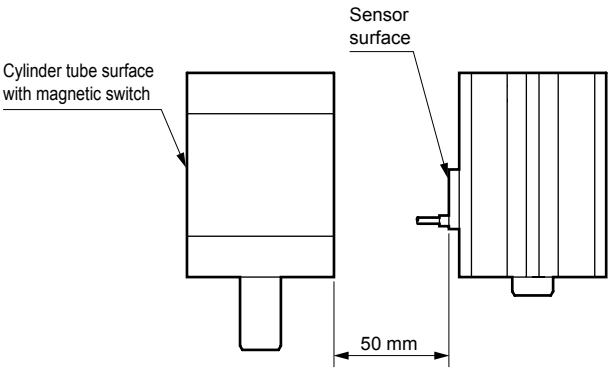

- If the sensor surface (sensor nameplate mounting surface) is covered by a magnetic substance such as a steel plate, the magnetic force may be disturbed, and the sensor will not detect a magnetic field. Take care when installing the actuator.

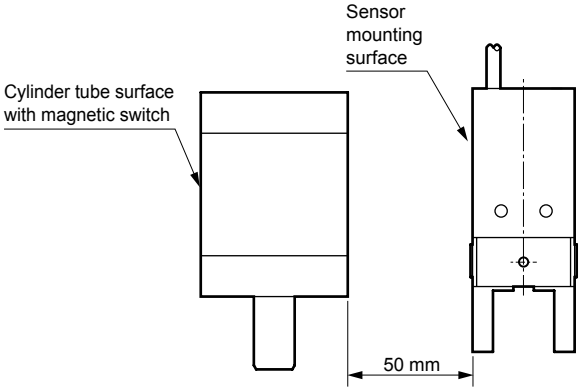

LCM
LCR
LCG
LCW
LCX
STM
STG
STS/STL
STR2
UCA2
ULK*
JSK/M2
JSG
JSC3/JSC4
USSD
UFCD
USC
UB
JSB3
LMB
LML
HCM
HCA
LBC
CAC4
UCAC2
CAC-N
UCAC-N
RCS2
RCC2
PCC
SHC
MCP
GLC
MFC
BBS
RRC
GRC
RV3*
NHS
HRL
LN
Hand
Chuk
MecHnd/Chuk
ShkAbs
FJ
FK
SpdContr
Ending

■ When mounting the amplifier unit case with separated amplifier using a side through hole, use M3 cross-recessed pan head machine screws, with tightening torque of 0.5 to 0.7 N·m.

■ Rubber plugs are attached to devices with the amplifier installed operating points adjustment trimmer and operating range adjustment trimmer section to maintain water resistance. Fit these plugs in after adjusting.

■ When mounting the display using a bottom through hole, use M3 cross-recessed pan head machine screws, with tightening torque of 0.5 to 0.7 N·m.

■ Connecting the lead wire

● Display

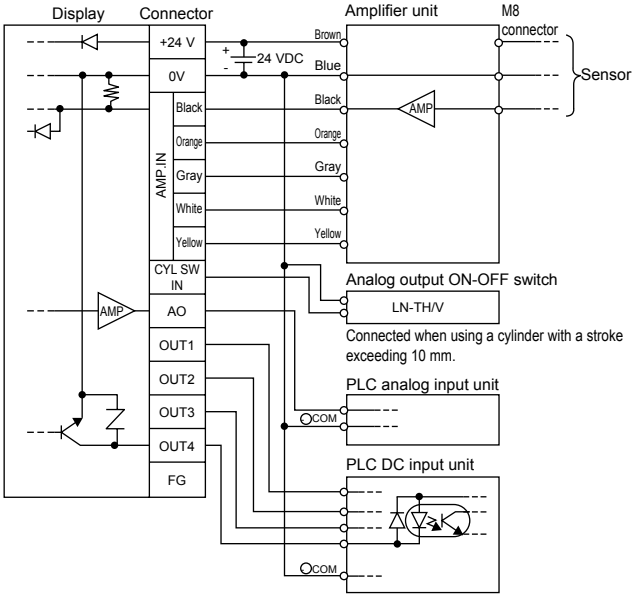

1. Since the display is a two-channel specification, +24 V, 0 V is present at every two places in the connector unit. Since each conduction is present inside the display for these, it operates with either of the wiring.
2. If connecting the amplifier unit with only one model, the channel of the connector unit does not matter.
3. Turn power OFF before wiring this product.
4. When connecting the wires to the display connector unit, connect with the female side pulled out.
5. The connectable wire size of the display connector unit is 0.08 to 1.5 mm^2 and its terminal screw tightening torque is 0.25 N·m.
6. Do not insert or remove the connector during the energized state.
7. When using a cylinder with a stroke exceeding 10 mm, connect the “analog output ON-OFF switch” to the display. Connect the brown wire to the “CYL SW IN” terminal and the blue wire to 0 V.
8. Treatment of shielded wire
   If noise is a problem, connect the shielded wire to COM or FG. This is not usually called for.

● When analog output cylinder is installed

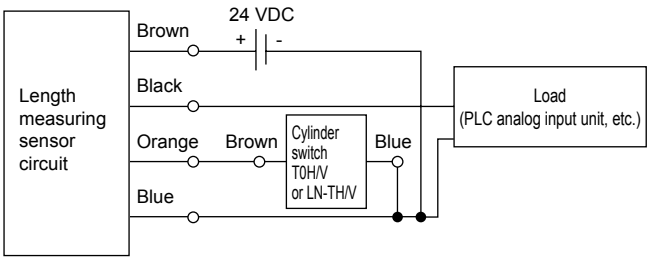

● When analog output hand is installed

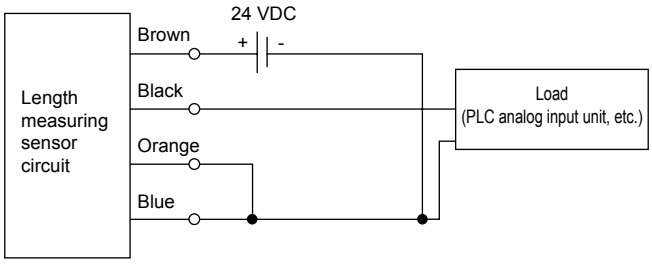

Connect the orange wire to the blue wire (-).

● Switch output

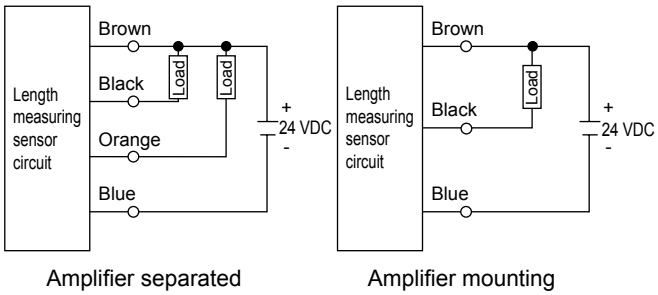

Switch output is an NPN transistor open collector type.

Product-specific cautions: Sensor/amplifier/display

Mounting, installation and adjustment

2. Analog output/display

⚠CAUTION

■ Cylinder equipped

- When fixing the cylinder, use stainless steel bolts for cylinder bolt mounting to maintain the sensor characteristics. If an iron bolt is used, strain occurs in the sensor output voltage waveform, display errors increase and analog output voltage linearity decreases.
  (Although it does not affect the repeatability, check the performance during actual use.)
  Similar problems may occur if a part of the cylinder body contacts a magnetic object.
  In particular, note that this problem will be more severe near the LN sensor or when the steel plate is shorter than the actuator body.

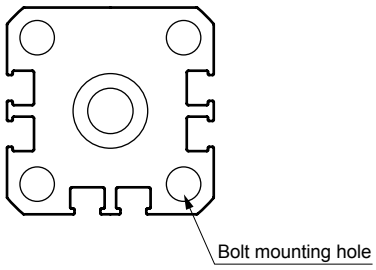

Example. SSD-LN, SSD-O-LN types

- The length measuring sensor and TOH/V (Note), or LN-TH/V switch for analog output voltage ON-OFF switching or another cylinder switch, can be mounted on the same surface if the mounting positions do not interfere.
- Be sure to connect a cylinder switch (TOH/V or LN-TH/V) to take out the analog output voltage within an arbitrary 8 mm interval (10 mm for display) of the cylinder's full stroke.
- Ensure that the sensor tightening torque is 0.1 to 0.2 N·m and install so that the sensor mounting screw faces the cylinder head side.

(Note) The selected switch differs with the type of cylinder, analog output, and the display.

■ Hand equipped

- If the hand is top-mounted using a spigot section and the base is a magnetic substance such as an iron plate, strain occurs in the sensor output voltage waveform, display errors increase and analog output voltage linearity decreases.
  (Although it does not affect the repeatability, check the performance during actual use.)
  Similar problems may occur on the front or side of the hand if the section contacts a magnetic object.
  In particular, note that this problem will be more severe near the LN sensor or when the steel plate is shorter than the actuator body.
  When fixing the hand, regardless of top, side, or front mounting, use stainless steel bolts to maintain the sensor characteristics.
- Ensure that the sensor tightening torque is 0.1 to 0.2 N·m and the sensor mounting screw faces the finger (jaw).

■ Cylinder/hand common items

- For the display, if load short-circuit current flows to switch output stage transistors due to wiring errors/connection, the internal short-circuit protection circuit is activated and the short-circuit current is cut. (The output indicator lamp (yellow) turns OFF and the short-circuit indicator lamp (red) turns ON.)
  To reset short-circuit protection, turn OFF feed current once, correct wiring mistakes, etc., then turn the current ON again.
  This product's protection circuit is effective only for specific misconnections and load short-circuits. It does not provide protection for all misconnections.
- After fitting male and female connectors, fix the male side with screws provided on the female side to prevent fallout.

3. Switch output

⚠CAUTION

■ If the operating range is too narrow or if the operating points are incorrectly adjusted when setting the switch output operating position, the output may or may not turn ON. Readjust in this case.
Operation is stabilized by turning the operating range adjustment trimmer clockwise and widening the operating range slightly.

■ If load short-circuit current flows to output stage transistors due to wiring errors/connection, the internal short-circuit protection circuit is activated (turns display OFF from ON) and the short-circuit current is cut.
To reset short-circuit protection, turn OFF feed power supply once, correct wiring mistakes, etc., then turn the current ON again.
This product's protection circuit is effective only for specific misconnections and load short-circuits. It does not provide protection for all misconnections.

■ Install the sensor at a position where the red lines on the hand and sensor are aligned. Ensure that the sensor tightening torque is 0.1 to 0.2 N·m and the sensor mounting screw faces the finger (jaw).

Use/maintenance

1. Common

⚠CAUTION

■ Length measuring sensor output voltage corresponds to the cylinder piston position. The value may fluctuate because of jig deformation and wear, etc., due to use over time. (For the hand, fluctuation is caused by finger opening and closing direction backlash and attachment deformation and wear.)
The display value, analog output voltage, and switch output position may fluctuate because of this, regardless of the model, so compensation should be regularly made.
(Refer to the product specifications sheet or handling precautions attached with the product for operation procedures.)

■ Length measuring sensor output voltage varies with temperature drift in piston magnet flux density (changes in working ambient temperature). This is minimized by the compensation circuit on the sensor. However, it is used for more detailed judgments. When large errors occur in the display, analog output voltage or switch output position, compensation should be made regularly with simple key operations (teaching function) on the display. (Refer to the product specifications or handling precautions attached with the product for operation procedures.)

■ Refer to the product specifications sheet or handling precautions attached with the product for display operation.

Hand

Overview

Handles various issues with abundant product variety, including thin types, lightweight types, wide strokes, and high-precision types, etc. Hand series with a focus on ease of use.

CONTENTS

Series variation 1504

Parallel hand

- Linear Slide Hand (LSH-HP) 1506
- Linear Slide Hand (LSH) 1581
- Feather hand (mini-parallel hand) (FH100) 1590
- Miniature cross roller parallel hand (BSA2) 1596
- Compact cross roller parallel hand (BHA) 1600
- Compact cross roller parallel hand with rubber cover (BHG) 1606
- Linear guide hand (LHA) 1612
- Linear guide hand with rubber cover (LHAG) 1620
- Parallel hand (HAP-1C) 1628
  (HAP-2 to 4CS) 1630
- Cross roller parallel hand (HKP) 1636
- Lateral parallel hand (HCP) 1642
- Long stroke parallel hand (HGP) 1648

Thin parallel hand

- Long stroke thin hand (HLF2) 1652
- Slim parallel hand (HLA/HLB) 1662
- Thin parallel hand with rubber cover (HLAG/HLBG) 1670
- Thin long stroke parallel hand (HLC) 1678
- Ultra thin parallel hand (HLD) 1686

Wide parallel hand

- Compact wide parallel hand (HMF) 1690
- Compact wide parallel hand with coolant proof specifications (HMF-G) 1700
- Linear guided large wide parallel hand (HMFB) 1708

Fulcrum hand

- Wide parallel hand (HFP) 1714
- Feather hand (mini-fulcrum hand) (FH500) 1720
- Fulcrum hand (HBL) 1726
- Toggle hand (HJL) 1732
- 180 degree open/close thin wide angle hand (HMD) 1738
- 180 degree open/close wide angle hand (HDL) 1744
- 180 degree open/close high gripping wide angle hand (HJD) 1748

Centering hand

- Centering hand (BHE) 1752

Attachment 1762
⚠ Safety precautions 1764
- Auto hand changer (CHC) 1874

Hand (parallel hand)

LCM
LCR
LCG
LCW
LCX
STM
STG
STS/STL
STR2
UCA2
ULK*
JSK/M2
JSG
JSC3/JSC4
USSD
UFCD
USC
UB
JSB3
LMB
LML
HCM
HCA
LBC
CAC4
UCAC2
CAC-N
UCAC-N
RCS2
RCC2
PCC
SHC
MCP
GLC
MFC
BBS
RRC
GRC
RV3*
NHS
HRL
LN
Hand
Chuk
MecHnd/Chuk
ShkAbs
FJ
FK
SpdContr
Ending
LSH-HP
LSH
FH100
BSA2
BHA/BHG
LHA
LHAG
HAP
HKP
HCP
HGP
HLF2
HLA/HLB
HLAG/HLBG
HLC
HLD
HMF
HMF-G
HMFB
HFP
FH500
HBL
HJL
HMD
HDL
HJD
BHE

	Product name	Model No.	Action of finger	Bore size (mm)	Gripping power* (N)	Stroke length (mm)	Page
Parallel hand	Linear Slide Hand (HP Series)	LSH-HP1 LSHL-HP1	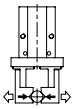	ø6 to ø32	3.3 to 158	4 to 22	1506
	Length measurement function Linear Slide Hand (HP Series)	LSHM-HP2	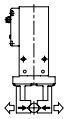	ø10 to ø25	11 to 65	4 to 14	1508
	Linear Slide Hand (standard)	LSH	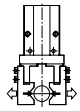	ø10 to ø25	11 to 65	4 to 14	1581
	Feather hand (Mini-parallel hand)	FH100	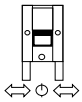	ø10 to ø25	6 to 30	8 to 20	1590
	Miniature cross roller parallel hand	BSA2	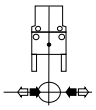	ø6	3.5	4	1596
	Compact cross roller parallel hand	BHA	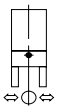	ø12 to ø25	15 to 80	5 to 15	1600
	Compact cross roller parallel hand with rubber cover	BHG	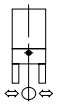	ø12 to ø25	15 to 80	5 to 15	1606
	Linear guide hand	LHA	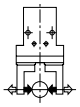	ø6 to ø32	5.5 to 145	4 to 20	1612
	Linear guide hand with rubber cover	LHAG	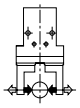	ø12 to ø32	18 to 145	5 to 20	1620
	Parallel hand	HAP-1C	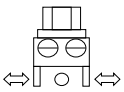	ø15	18	8	1628
	Parallel hand	HAP	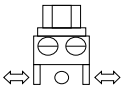	ø20 to ø40	20 to 100	16 to 41	1630
	Cross roller parallel hand	HKP	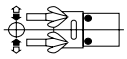	ø32 to ø80	160 to 1480	24 to 60	1636
	Lateral parallel hand	HCP	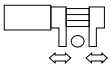	ø12 to ø32	12 to 75	20 to 40	1642
	Long stroke length parallel hand	HGP		ø25	17	56	1648

*Gripping force is the value with air pressure of 0.5 MPa on the closed side. The actual gripping power depends on the distance from the gripping point and the finger angle. Consult each product page when making a selection.

	Product name		Model No.	Action of finger	Bore size (mm)	Gripping power* (N)	Stroke length (mm)	Page
Thin parallel hand	Long stroke length thin hand		HLF2	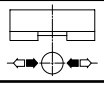	ø8 x 2 to ø20 x 2	20 to 135	12 to 96	1652
	Thin parallel hand		HLA/ HLB		ø12 to ø20	21 to 70	13 to 25	1662
	Thin parallel hand with rubber cover		HLAG/ HLBG		ø12 to ø20	21 to 70	13 to 25	1670
	Thin long stroke length parallel hand		HLC	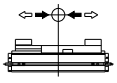	ø8 x 2 to ø30 x 2	18 to 310	20 to 140	1678
	Ultra thin parallel hand		HLD	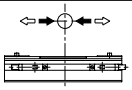	ø8 x 4 to ø20 x 4	35 to 250	12 to 30	1686
Wide parallel hand	Compact wide parallel hand		HMF		ø12 x 2 to ø40 x 2	32 to 430	20 to 200	1690
	Compact wide parallel hand with coolant proof specifications		HMF-G		ø16 x 2 to ø25 x 2	66 to 170	30 to 120	1700
	Linear guided large wide parallel hand		HMFB	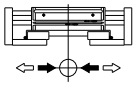	ø25 x 2 to ø40 x 2	120 to 310	100 to 200	1708
	Wide parallel hand		HFP	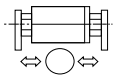	ø16 x 2 to ø40 x 2	20 to 255	20 to 60	1714
Fulcrum hand	Feather hand (Mini-fulcrum hand)		FH500		ø10 to ø20	2 to 15	Opening angle 20°	1720
	Fulcrum hand		HBL	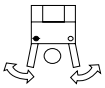	ø15 to ø40	10 to 125	Opening angle 20°	1726
	Toggle hand		HJL		ø32 to ø63	250 to 1800	Opening angle 28°	1732
	180 degree open/close thin wide angle hand		HMD	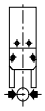	ø12 to ø25	16 to 120	Opening angle 184°	1738
	180 degree open/close wide angle hand		HDL		ø25 to ø40	10 to 50	Opening angle 180°	1744
	180 degree open/close high gripping wide angle hand		HJD	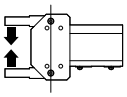	ø32 to ø63	200 to 1250	Opening angle 184°	1748
Centering hand	Centering hand		BHE	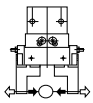	ø12 to ø32	15 to 125	7 to 22	1752

*Gripping force is the value with air pressure of 0.5 MPa on the closed side. The actual gripping power depends on the distance from the gripping point and the finger angle. Consult each product page when making a selection.

LSH-HP1 Series

Increased linear guide performance

High rigidity

Increased amount of overhang

By improving the guide rigidity beyond that of conventional products, the allowable moment has been increased.

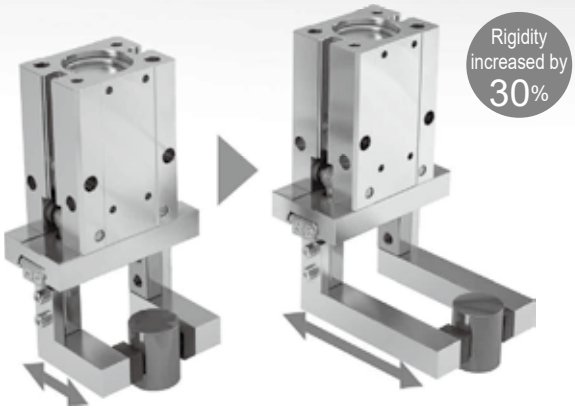

High precision

Repeatability ±0.01 mm

High rigidity and high precision are achieved with a structure integrating the guide rail and finger.

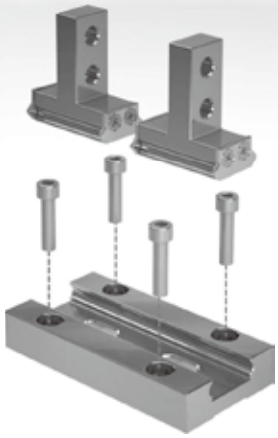

Increased flexibility in design

Can be mounted on three directions

Axial (upward) mounting	Horizontal installation	Vertical installation
Two positioning holes enabling inverted mounting with reference spigot have been added 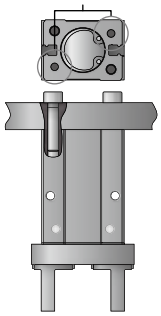	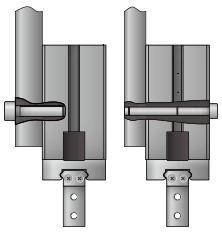	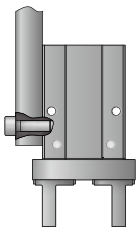

Long service life

Double the durability of conventional models*

Packing design has been optimized. Highly advanced sliding technology has enabled durability twice that of conventional models.

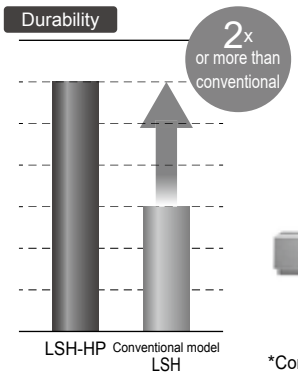

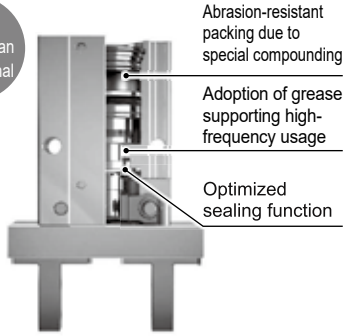

*Compared with our conventional LSH model.

Reduced processes on site

High-precision positioning of ±0.025 mm

The addition of "positioning holes" with the grip center as reference allows the centering precision to be easily reproduced.

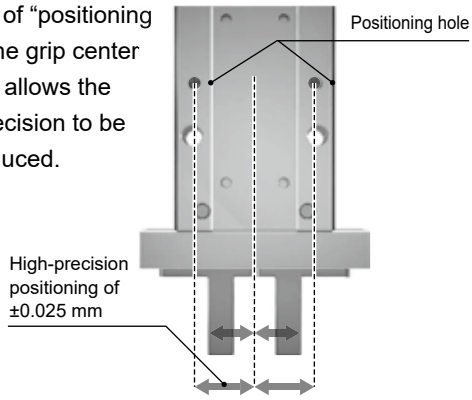

Rail plate system adopted

The rail plate allows switch replacement while the hand is attached to the robot or equipment.

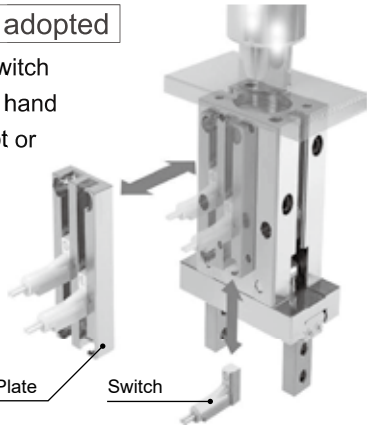

Increased productivity begins with the Linear Slide Hand

Usage Examples: Reduction of processes on site

Replacement of body

Positioning holes that guarantee centering precision enable highly reproducible mounting, with no fine adjustment required. This contributes to reduced mounting adjustment work-hours and improved reproducibility.

Replacement of switch

The switch can be replaced without detaching the hand from the robot or equipment.

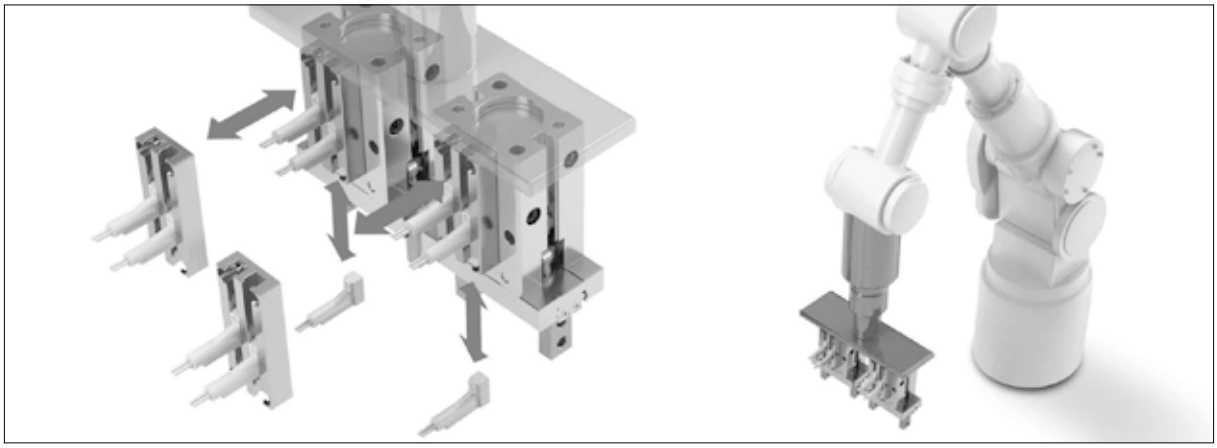

Extensive series variation

Standard

With rubber cover

Long stroke length

Long stroke length + with rubber cover

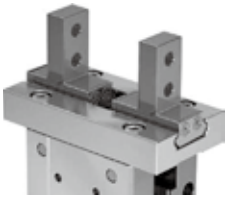
Basic opening/closing direction tap

Side tap

Opening/closing direction through hole

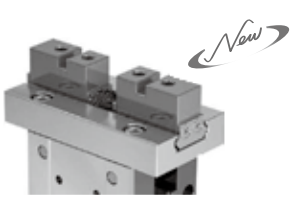

Flat

Linear Slide Hand with Length Measuring Function LSH-HP2 Series

New

High precision

Repeatability ±0.02 mm

A new sensor system is adopted and integrated, achieving higher repeatability than ever before.

Linearity FS ±0.5%

With correction adapter: FS ±0.5%

Without correction adapter: FS ±3%

A correction adapter is adopted to improve the linear accuracy.

Example image.

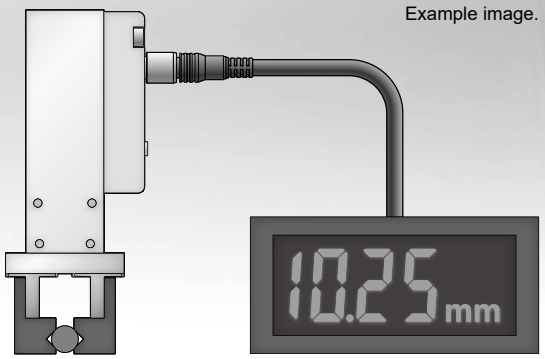

Integrated structure

First in the industry

Adopts an LVDT* sensor highly resistant to vibration and impact.
A displacement sensor is built into the body, achieving a high-precision integrated structure.

* LVDT is short for Linear Variable Differential Transformer, a sensor that converts mechanical displacement into electric signal for output.

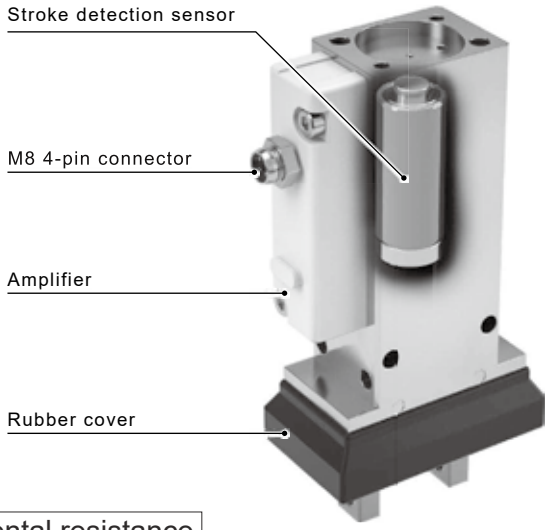

Linearity correction adapter

Environmental resistance

The IP65 equivalent amplifier and rubber cover prevent the ingress of cutting chips and water drops.

Extensive series variation

Amplifier side mounting

Amplifier front mounting

With rubber cover

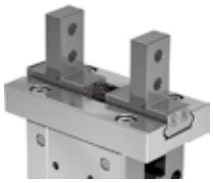

Basic opening/closing direction tap

Side tap

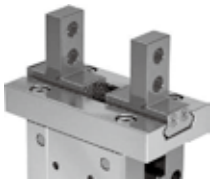

Opening/closing direction through hole

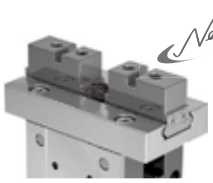

New

Flat

A new series that combines improved reliability and productivity.

Usage examples

Workpiece foreign object judgment

Grips and measures simultaneously, reducing the number of inspection steps.

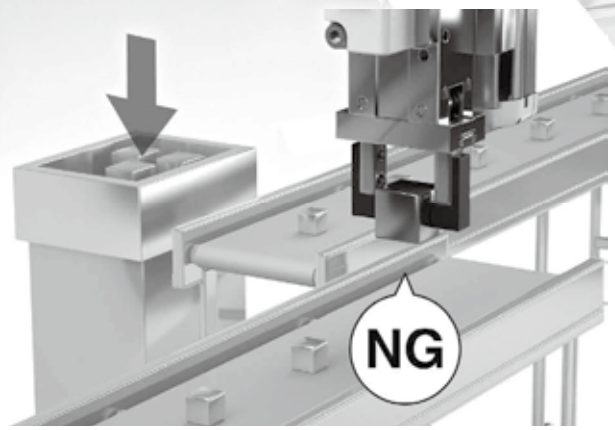

Workpiece model judgment

Capable of instantaneously judging minute differences in workpiece models.

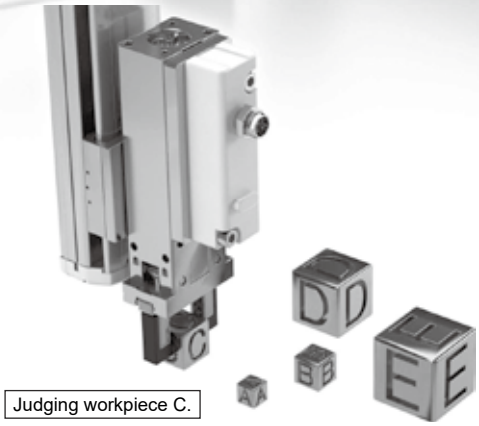

Judging workpiece C.

Gripping orientation judgment

By detecting misaligned orientations when gripped, contact accidents can be prevented at the transported destination.

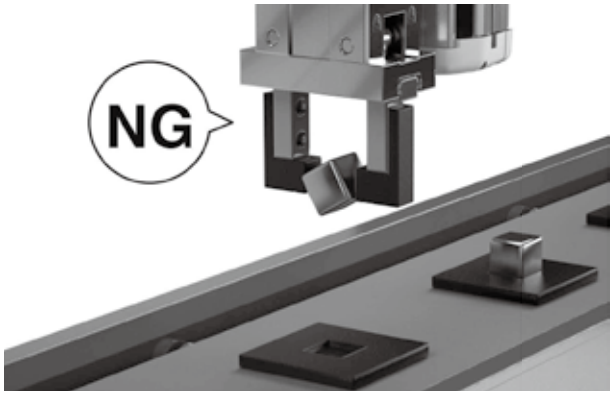

Minute workpiece gripping / missed grip judgment

Accurately judges whether even tiny workpieces were gripped or missed.

Elimination of human error

All strokes are output in detail, eliminating manual adjustment error as caused by conventional switches.

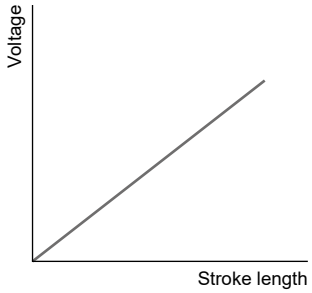

Predictive maintenance

Monitors abnormal wear and deformation of gripping fingers and jigs through changes in output to prevent equipment and robot damage.

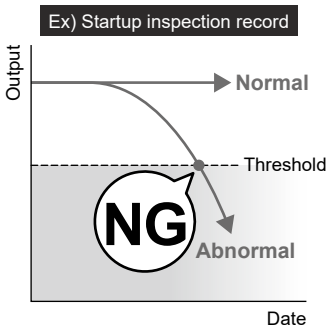

Series variation ▶ Linear Slide Hand LSH-HP Series

	Variation	Model No.	Bore size (mm)
HP1 Series	Double acting/single acting without rubber cover	LSH-A	ø6
			ø10
			ø16
			ø20
			ø25
			ø32
	Double acting/single acting with rubber cover	LSH-G LSH-F	ø6
			ø10
			ø16
			ø20
			ø25
			ø32
	Double acting long stroke length without rubber cover	LSHL-A	ø10
			ø16
			ø20
			ø25
	Double acting long stroke length with rubber cover	LSHL-G LSHL-F	ø10
			ø16
			ø20
HP2 Series	With length measuring function, double acting without rubber cover	LSHM-A	ø10
			ø16
			ø20
			ø25
	With length measuring function, double acting with rubber cover	LSHM-G LSHM-F	ø10
			ø16
			ø20
			ø25

●Positional reference of positioning hole 1567
●Model selection..... 1568
●Technical data 1570
●Cylinder switch precautions 1576

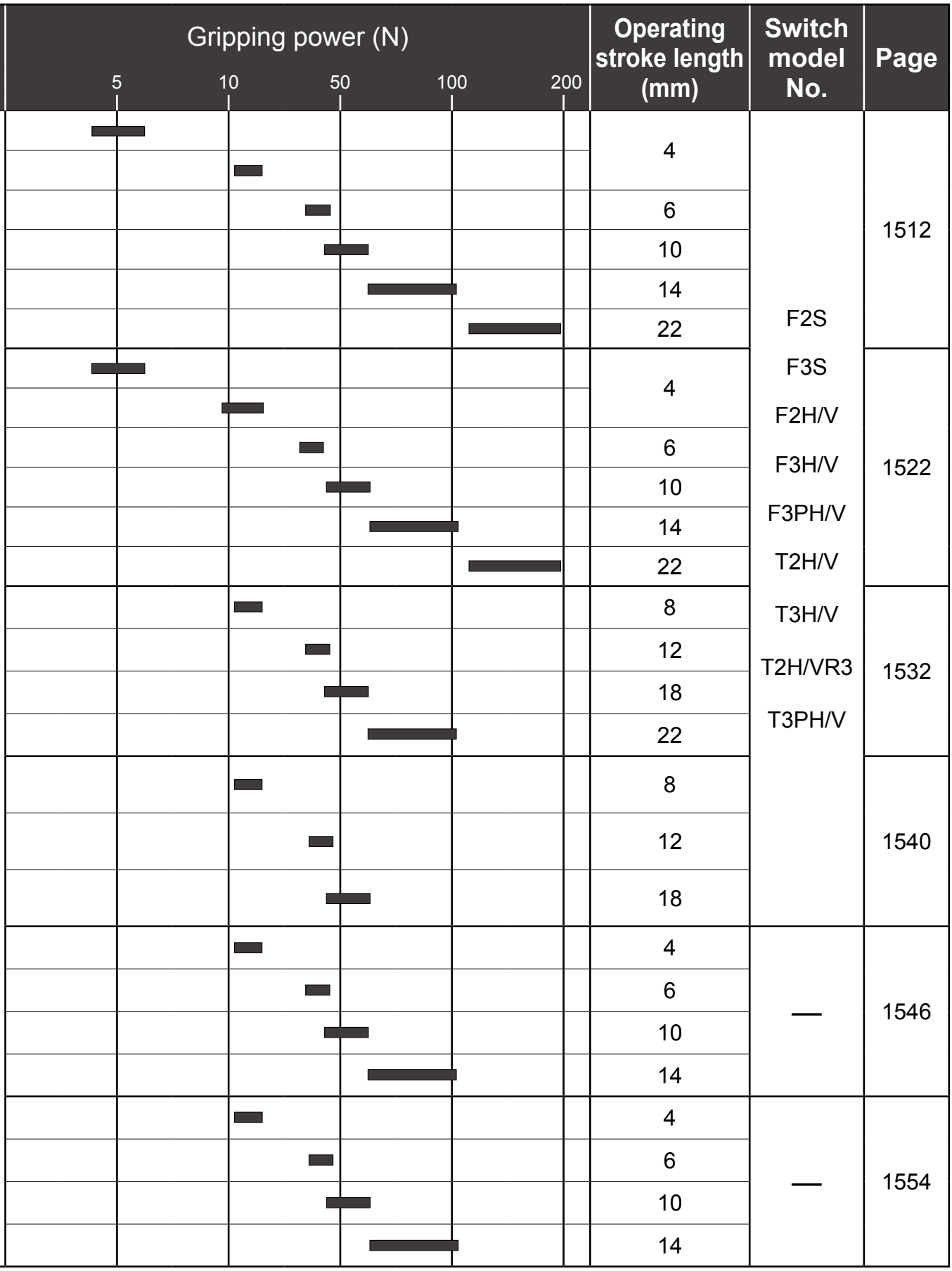

Operating stroke length (mm)	Switch model No.	Page
4	F2S F3S F2H/V F3H/V F3PH/V T2H/V T3H/V T2H/VR3 T3PH/V	1512
6		
10		
14		
22		
4		1522
6		
10		
14		
22		
8		1532
12		
18		
22		
8		1540
12		
18		
4	—	1546
6		
10		
14		
4	—	1554
6		
10		
14		

*Range of gripping power at supply pressure 0.5 MPa and finger length 20 mm

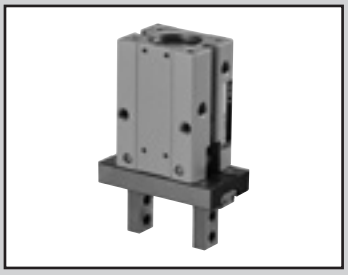

Linear Slide Hand double acting / single acting

LSH-A Series

● Operating stroke: 4, 6, 10, 14, 22 mm

Double acting

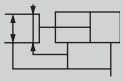

Single acting (normally open)

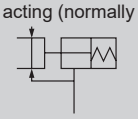

Single acting (normally closed)

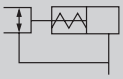

RoHS

Specifications

Descriptions			LSH-A					
Bore size		mm	ø6	ø10	ø16	ø20	ø25	ø32
Actuation			Double acting/single acting (normally open/normally closed)					
Working fluid			Compressed air					
Max. working pressure		MPa	0.7					
Min. working pressure	MPa	Double acting	0.15	0.2	0.1			
		Single acting	0.3	0.35	0.25			
Port size			M3		M5			
Ambient temperature		°C	-10 to 60 (no freezing)					
Operating stroke		mm	4		6	10	14	22
Repeatability		mm	±0.01					
Weight Double acting (Single acting)	Finger OP: 1, 2, 3	kg	0.032	0.06	0.135	0.275 (0.28)	0.49 (0.495)	0.73 (0.78)
	Finger OP: 4				0.14	0.28 (0.285)	0.495 (0.5)	0.76 (0.81)
Lubrication			Not required					

Gripping force

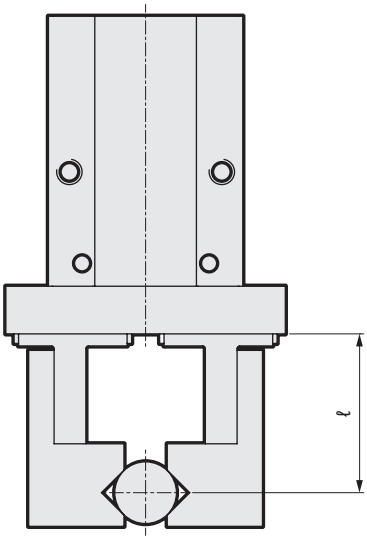

Unit: N

Bore size (mm)	Double acting	
	Open side	Closed side
ø6	6.1	3.3
ø10	17	11
ø16	45	34
ø20	66	42
ø25	104	65
ø32	193	158

Bore size (mm)	Single acting (normally open)	
		Closed side
ø6	-	1.9
ø10		7.1
ø16		27
ø20		33
ø25		45
ø32		131

Bore size (mm)	Single acting (normally closed)	
	Open side	
ø6	3.7	-
ø10	13	
ø16	38	
ø20	57	
ø25	83	
ø32	161	

* At supply pressure of 0.5 MPa, ℓ = 20 mm, stroke center
*1:Avoid gripping the workpiece with single acting spring force as much as possible. The gripping force may become unstable, leading to operation failure.

Switch specifications

Item	Proximity 2-wire	Proximity 3-wire	Proximity 2-wire	Proximity 3-wire	
	F2S	F3S	F2H/F2V	F3H/F3V	F3PH/F3PV
Applications	Programmable Controller dedicated	Programmable For controller, relay	Programmable Controller dedicated	Programmable For controller, relay	
Output method	–	NPN output	–	NPN output	PNP output
Power supply voltage	–	10 to 28 VDC	–	10 to 28 VDC	4.5 to 28 VDC
Load voltage/ current	10 to 30 VDC 5 to 20 mA	30 VDC, 50 mA or less	10 to 30 VDC 5 to 20 mA	30 VDC, 50 mA or less	
Indicator	LED (Lit when ON)		Yellow LED (Lit when ON)		
Leakage current	1 mA or less	10 μA or less	1 mA or less	10 μA or less	
Shock resistance	980 m/s^2				
Weight g	1 m:10 3 m:29				

*1: The F-switch uses a bend-resistant lead wire by default.

Item	Proximity 2-wire		Proximity 3-wire	
	T2H/T2V	T2HR3/T2VR3 (Lead wire, a bend-resistant type)	T3H/T3V	T3PH/T3PV
Applications	Programmable Controller dedicated		Programmable For controller, relay	
Output method	–	–	NPN output	PNP output
Power supply voltage	–	–	DC10 to 28V	
Load voltage/ current	10 to 30 VDC 5 to 20 mA	10 to 30 VDC 5 to 20 mA	30 VDC or less 100 mA or less	
Indicator lamp	Red LED (Lit when ON)	Red LED (Lit when ON)	Red LED (Lit when ON)	Yellow LED (Lit when ON)
Leakage current	1 mA or less	1 mA or less	10 μA or less	
Impact resistance	980 m/s^2			
Weight g	1 m: 18 g 3 m: 49 g			

LCM
LCR
LCG
LCW
LCX
STM
STG
STS/STL
STR2
UCA2
ULK*
JSK/M2
JSG
JSC3/JSC4
USSD
UFCD
USC
UB
JSB3
LMB
LML
HCM
HCA
LBC
CAC4
UCAC2
CAC-N
UCAC-N
RCS2
RCC2
PCC
SHC
MCP
GLC
MFC
BBS
RRC
GRC
RV3*
NHS
HRL
LN
Hand
Chuk
MecHnd/Chuk
ShkAbs
FJ
FK
SpdContr
Ending
LSH-HP
LSH
FH100
BSA2
BHA/BHG
LHA
LHAG
HAP
HKP
HCP
HGP
HLF2
HLA/HLB
HLAG/HLBG
HLC
HLD
HMF
HMF-G
HMFB
HFP
FH500
HBL
HJL
HMD
HDL
HJD
BHE

How to order

Without switch (built-in magnet for switch)

LSH - A 06 D 1 R ——— HP1

With switch (built-in magnet for switch)

LSH - A 06 D 1 R - F2H - D - HP1

Ⓐ Rubber cover
Ⓑ Bore size
Ⓒ Actuation
Ⓓ Finger
Ⓔ Grip center reference, high precision positioning hole
Ⓕ Switch model No.
Ⓖ Switch quantity

Code	Description
Ⓐ Rubber cover	
A	Without rubber cover
Ⓑ Bore size (mm)	
06	ø6
10	ø10
16	ø16
20	ø20
25	ø25
32	ø32
Ⓒ Actuation	
D	Double acting
S	Single acting / normally open
C	Single acting / normally closed
Ⓓ Finger * Refer to the Dimensions for details.	
1	Basic
2	Side tap
3	Through hole
4	Flat
Ⓔ Grip center reference, high precision positioning hole	
N	None
L	Refer to the figure at left.
R	

Ⓕ Switch model No.

Blank	No switch, with F-switch rail
N	No switch, no switch rail
A	No switch, with T-switch rail (ø32 only)

Straight lead wire	L-shaped lead wire	Contact	Voltage AC	Voltage DC	Indicator	Lead wire
–	F2S*	Proximity		●	1-color LED	2-wire
–	F3S*			●		3-wire
F2H*	F2V*			●		2-wire
F3H*	F3V*			●		3-wire
F3PH*	F3PV*			●		3-wire
T2H*	T2V*			●		2-wire
T2HR3	T2VR3			●		2-wire
T3H*	T3V*			●		3-wire
T3PH*	T3PV*			●		3-wire

*** Lead wire length**	
Blank	1 m (standard)
3	3 m (option)

Ⓖ Switch quantity

R	1 on open side
H	1 on closed side
D	2

*1: If the one with the switch is selected, the product comes with a rail plate corresponding to the switch.
*2: Only ø32 can be selected with the T-switch.
*3: Refer to page 1576 for cylinder switch precautions.

Grip center reference, high precision positioning hole position diagram

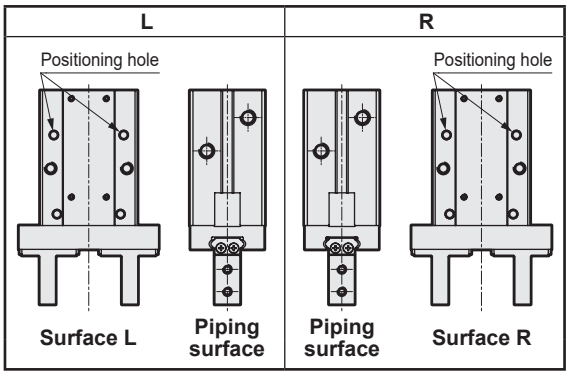

Refer to the Dimensions (pages 1516 to 1521) and page 1567 for details.

How to order switch

SW - F2H*

Switch model No. (Item Ⓕ above)

Switch mounting availability table

Model No.	Switch model No.	Side mounting	Rail mounting
LSH-A06	F2/3□	●	–
	F2/3S	–	●
LSH-A10	F2/3□	●	●
	F2/3S	●	●
LSH-A16	F2/3□	●	●
	F2/3S	●	●
LSH-A20	F2/3□	●	●
	F2/3S	●	●
LSH-A25	F2/3H·PH	–	●
	F2/3V·PV	●	●
	F2/3S	●	●
LSH-A32	F2/3□	●	●
	F2/3S	●	●
	T2/3□	–	●

[Example of model No.]

LSH-A06D1R-F2H-D-HP1

Model: Linear Slide Hand

Ⓐ Rubber cover	: Without rubber cover
Ⓑ Bore size	: ø6
Ⓒ Actuation	: Double acting
Ⓓ Finger	: Basic
Ⓔ Grip center reference, high precision positioning hole	: R
Ⓕ Switch model No.	: Proximity F2H, lead wire 1 m
Ⓖ Switch quantity	: 2

Internal structure and parts list

● LSH-A06

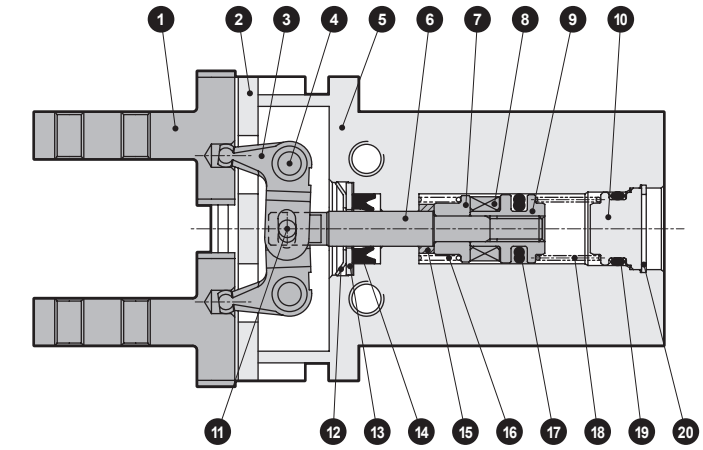

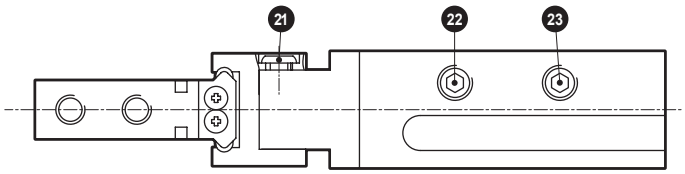

● LSH-A10 to 16

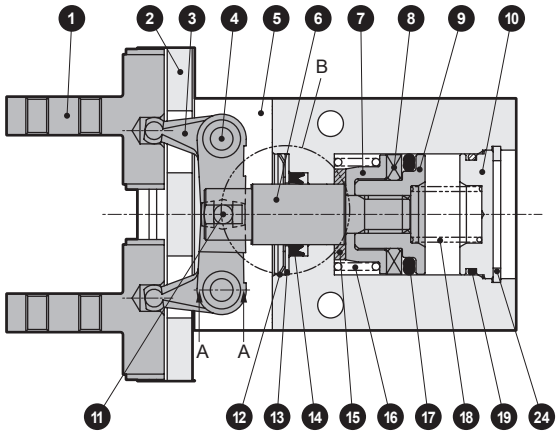

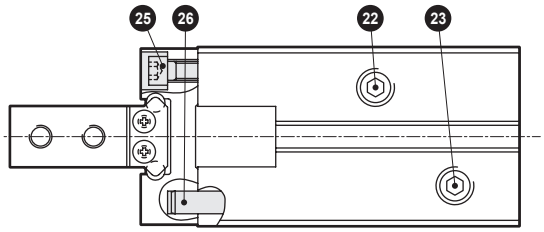

Cross-section A-A

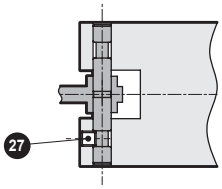

B part ø20, 25, 32

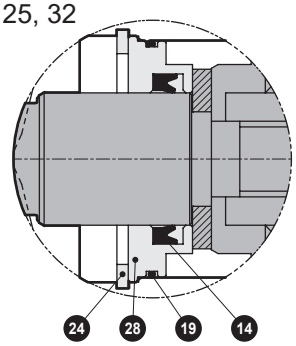

Parts list

No.	Part name	Material	Remarks	No.	Part name	Material	Remarks
1	Finger	Stainless steel		15	Cushion rubber	Urethane rubber	
2	Linear guide	Stainless steel		16	Coil spring	Piano wire	Single acting C
3	Lever	Stainless steel		17	Piston packing	Nitrile rubber	
4	Fulcrum axis	Steel		18	Coil spring	Piano wire	Single acting S
5	Body	Aluminum alloy		19	O-ring	Nitrile rubber	
6	Piston rod	Stainless steel		20	C-snap ring	Steel	
7	Spring bracket	Aluminum alloy		21	Pan head machine screw	Stainless steel	
8	Magnet			22	Plug	Stainless steel	Single acting C
9	Piston	Aluminum alloy		23	Plug	Stainless steel	Single acting S
10	Head cover	Aluminum alloy		24	C-snap ring	Stainless steel	
11	Operation shaft	Steel alloy		25	Hexagon socket head cap screw	Stainless steel	ø32 is steel
12	CR ring	Stainless steel		26	Pin	Steel	
13	Cap	Stainless steel		27	Hexagon socket set screw	Stainless steel	
14	Rod packing	Nitrile rubber		28	Rod metal	Aluminum alloy	

Repair parts list

Bore size (mm)	Kit No.	Repair part No.	Rail plate kit No.		
			For F-switch	For T-switch	Description
ø6	Cannot be disassembled	-	LSH-RPF-06-HP	–	Rail plate small screw
ø10	LSH-10K-HP	12 14 17 19	LSH-RPF-10-HP	–	
ø16	LSH-16K-HP		LSH-RPF-16-HP	–	
ø20	LSH-20K-HP	14 17 19	LSH-RPF-20-HP	–	
ø25	LSH-25K-HP		LSH-RPF-25-HP	–	
ø32	LSH-32K-HP		LSH-RPF-32-HP	LSH-RPT-32-HP	

LCM
LCR
LCG
LCW
LCX
STM
STG
STS/STL
STR2
UCA2
ULK*
JSK/M2
JSG
JSC3/JSC4
USSD
UFCD
USC
UB
JSB3
LMB
LML
HCM
HCA
LBC
CAC4
UCAC2
CAC-N
UCAC-N
RCS2
RCC2
PCC
SHC
MCP
GLC
MFC
BBS
RRC
GRC
RV3*
NHS
HRL
LN
Hand
Chuk
MecHnd/Chuk
ShkAbs
FJ
FK
SpdContr
Ending
LSH-HP
LSH
FH100
BSA2
BHA/BHG
LHA
LHAG
HAP
HKP
HCP
HGP
HLF2
HLA/HLB
HLAG/HLBG
HLC
HLD
HMF
HMF-G
HMFB
HFP
FH500
HBL
HJL
HMD
HDL
HJD
BHE

Dimensions (bore size: ø6)

● LSH-A06*1N

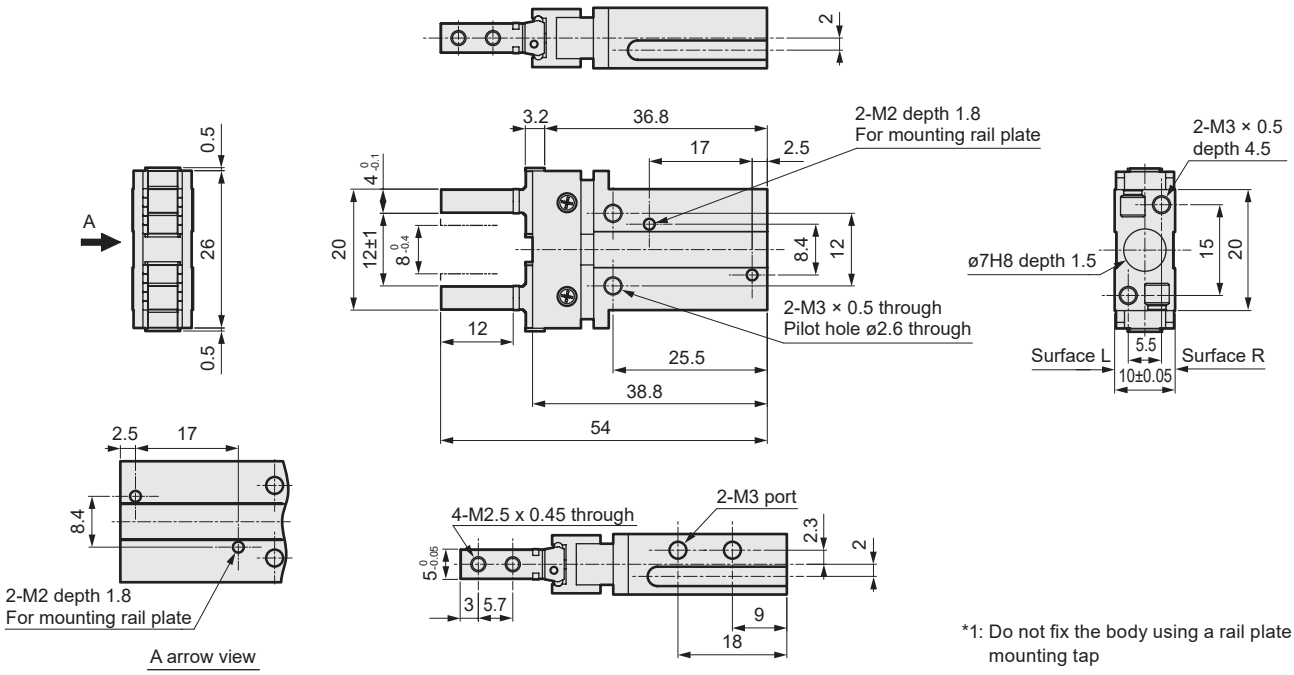

*1: Do not fix the body using a rail plate mounting tap

● LSH-A06*2N

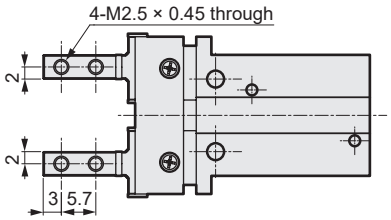

● LSH-A06*3N

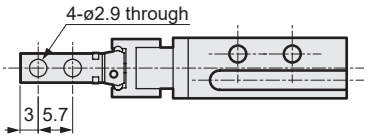

● LSH-A06*4N

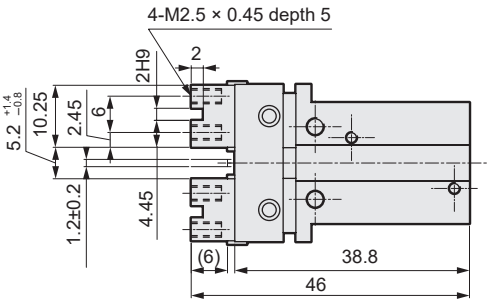

● LSH-A06**R / L

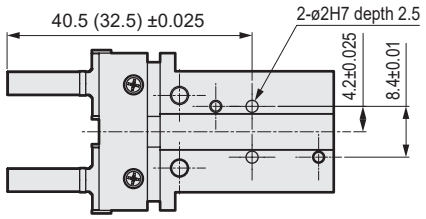

*2: Positioning holes are machined on surface R for LSH-A06**R and surface L for LSH-A06**L. Refer to page 1567 for the base line.
*3: The dimensions in parentheses are the dimensions for LSH-A06*4.

● With switch, rail assembly

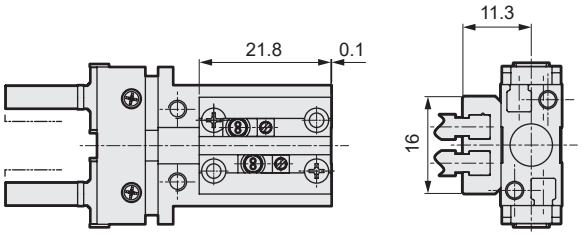

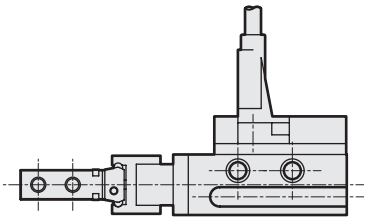

*4: Refer to Page 1576 for cylinder switch precautions.
*5: Use fittings with an outer diameter of ø9 or less to prevent them from interfering with each other.

Dimensions (bore size: ø10)

● LSH-A10*1N

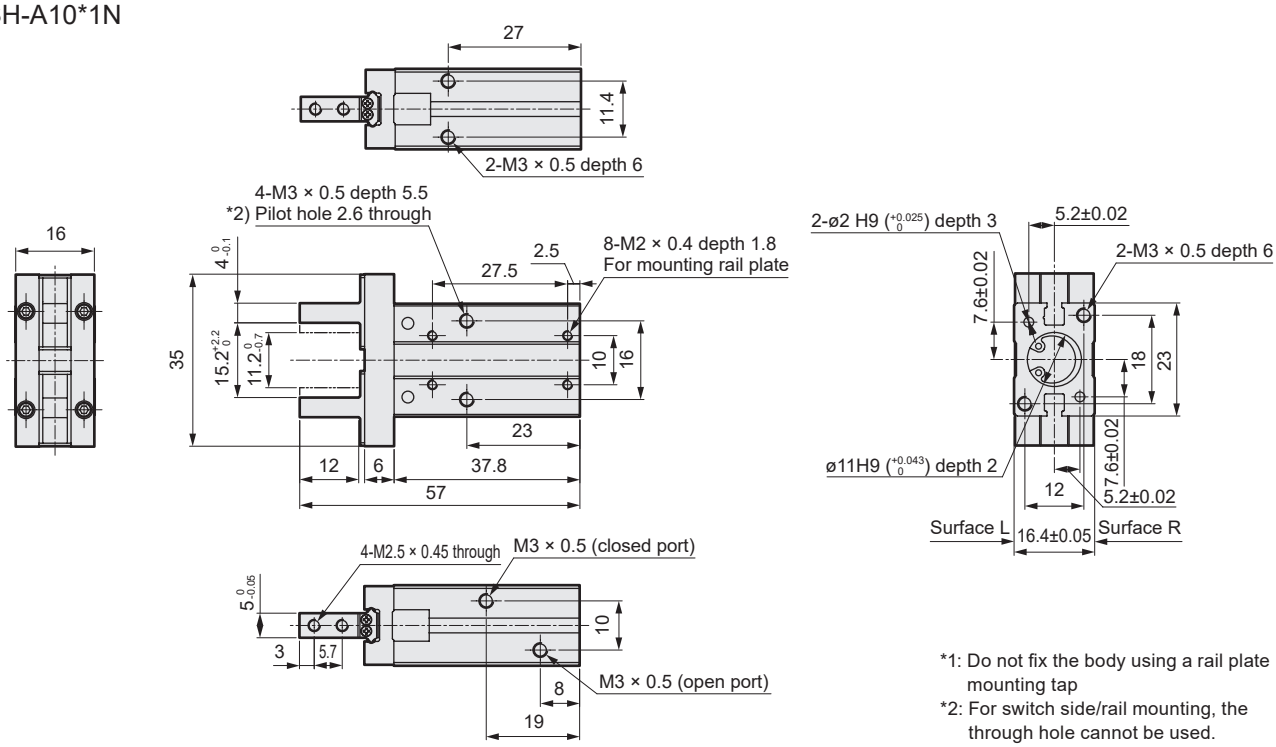

*1: Do not fix the body using a rail plate mounting tap
*2: For switch side/rail mounting, the through hole cannot be used.

● LSH-A10*2N

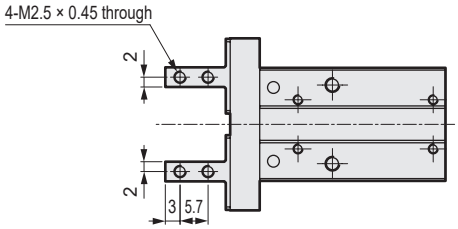

● LSH-A10*3N

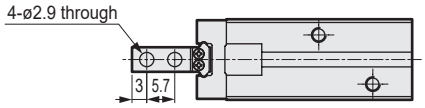

● LSH-A10*4N

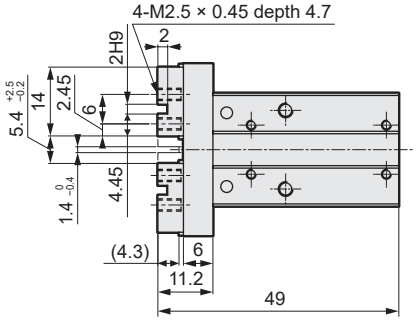

● LSH-A10**R / L

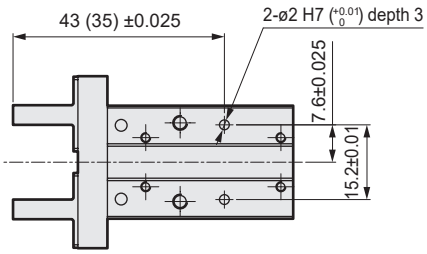

*3: Positioning holes are machined on surface R for LSH-A10**R and surface L for LSH-A10**L. Refer to page 1567 for the base line.
*4: The dimensions in parentheses are the dimensions for LSH-A10*4.

● With switch, rail assembly

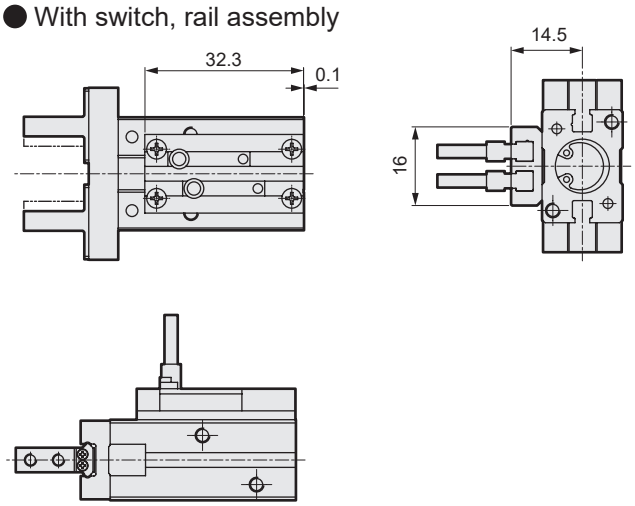

*5: Refer to page 1576 for cylinder switch precautions.

LCM
LCR
LCG
LCW
LCX
STM
STG
STS/STL
STR2
UCA2
ULK*
JSK/M2
JSG
JSC3/JSC4
USSD
UFCD
USC
UB
JSB3
LMB
LML
HCM
HCA
LBC
CAC4
UCAC2
CAC-N
UCAC-N
RCS2
RCC2
PCC
SHC
MCP
GLC
MFC
BBS
RRC
GRC
RV3*
NHS
HRL
LN
Hand
Chuk
MecHnd/Chuk
ShkAbs
FJ
FK
SpdContr
Ending
LSH-HP
LSH
FH100
BSA2
BHA/BHG
LHA
LHAG
HAP
HKP
HCP
HGP
HLF2
HLA/HLB
HLAG/HLBG
HLC
HLD
HMF
HMF-G
HMFB
HFP
FH500
HBL
HJL
HMD
HDL
HJD
BHE

Dimensions (bore size: ø16)

● LSH-A16*1N

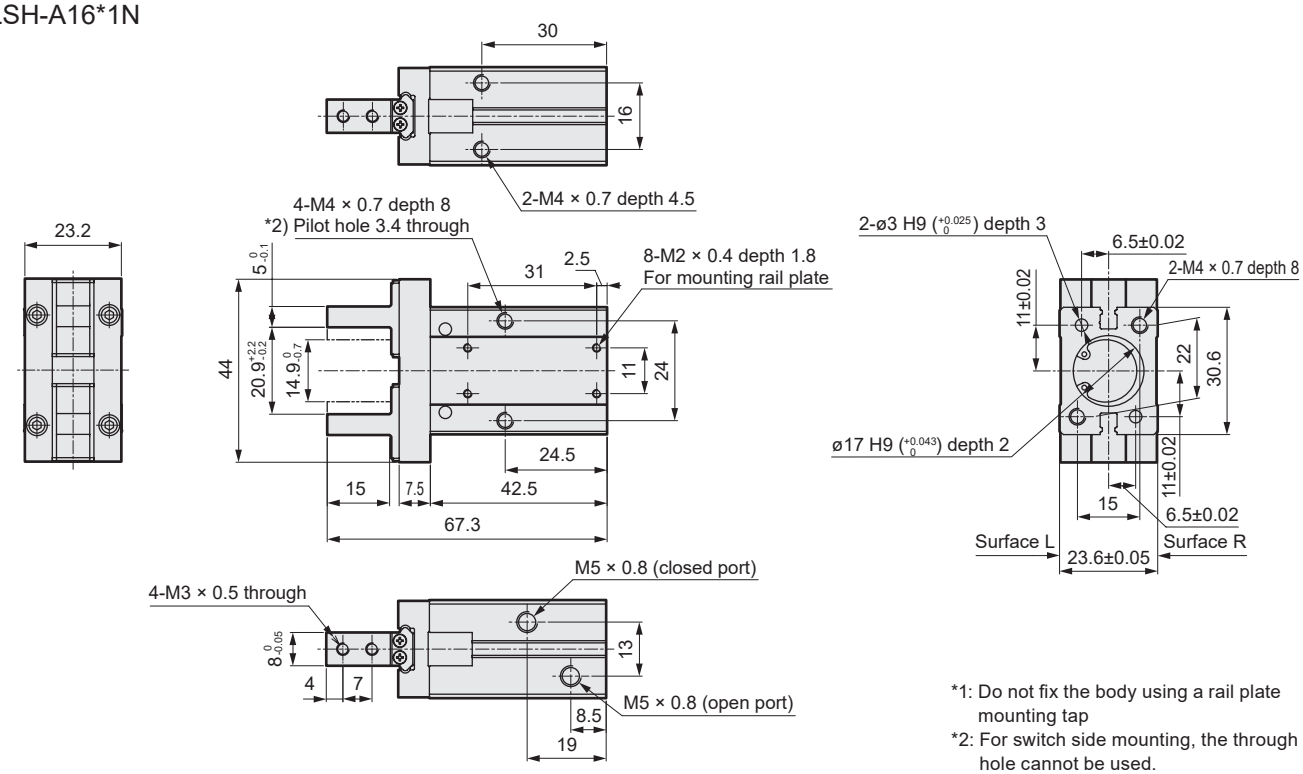

*1: Do not fix the body using a rail plate mounting tap
*2: For switch side mounting, the through hole cannot be used.

● LSH-A16*2N

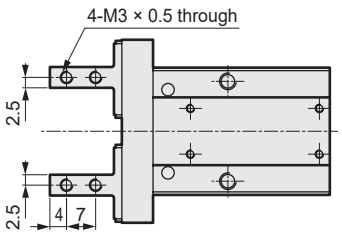

● LSH-A16*3N

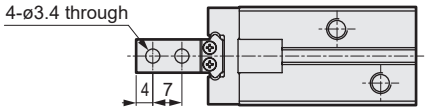

● LSH-A16*4N

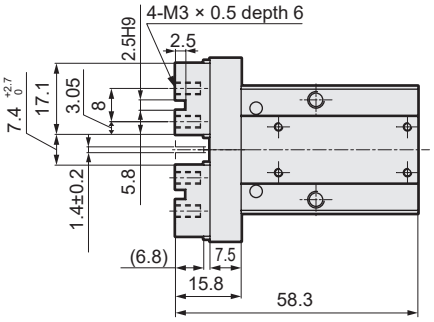

● LSH-A16**R / L

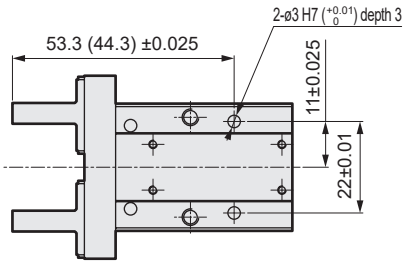

*3: Positioning holes are machined on surface R for LSH-A16**R and surface L for LSH-A16**L. Refer to page 1567 for the base line.
*4: The dimensions in parentheses are the dimensions for LSH-A16*4.

● With switch, rail assembly

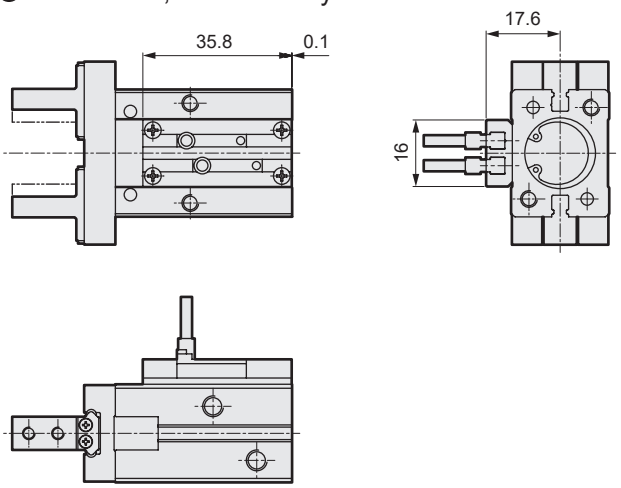

*5: Refer to page 1576 for cylinder switch precautions.

Dimensions (bore size: ø20)

● LSH-A20*1N

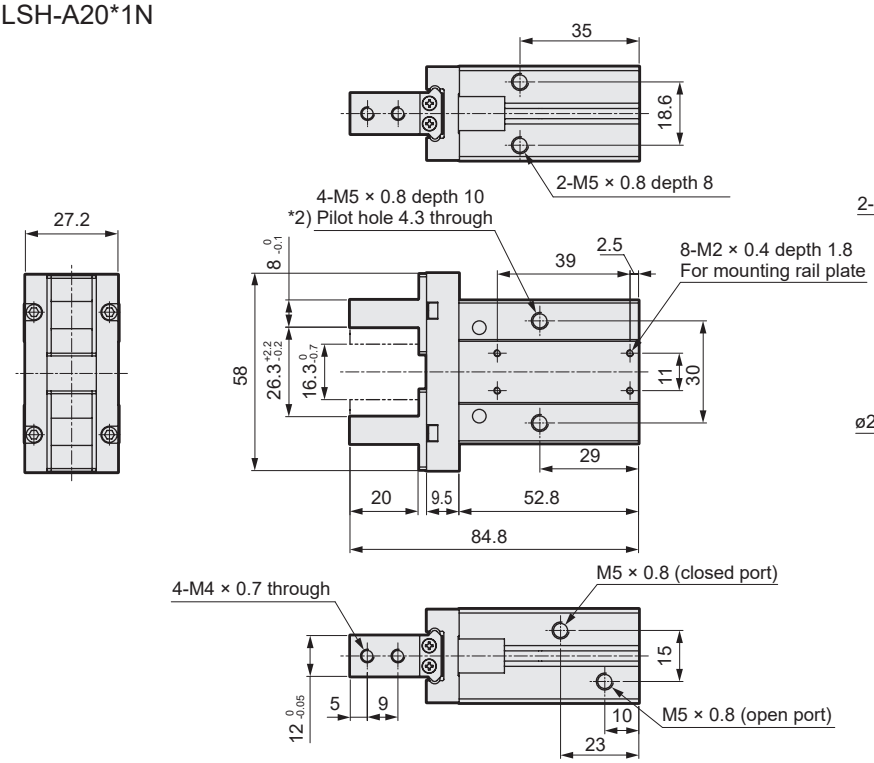

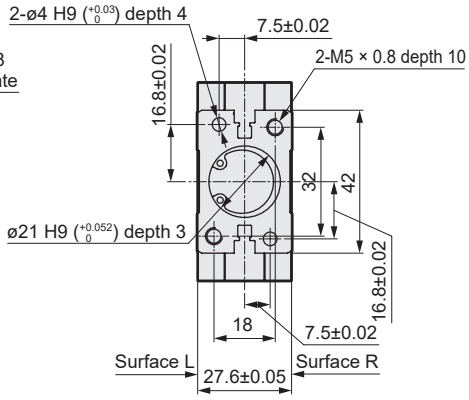

*1: Do not fix the body using a rail plate mounting tap

● LSH-A20*2N

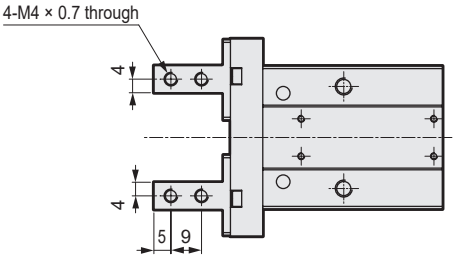

● LSH-A20*3N

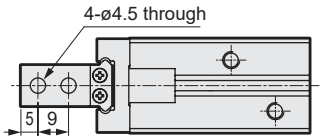

● LSH-A20*4N

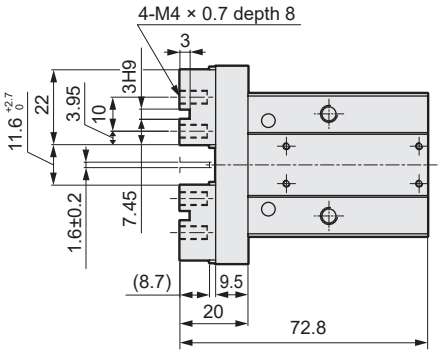

● LSH-A20**R / L

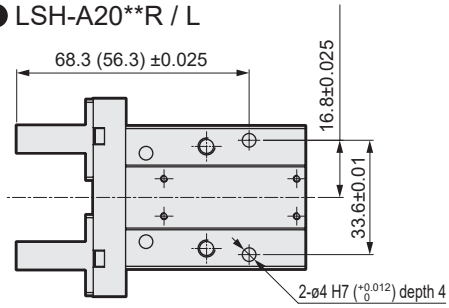

*3: Positioning holes are machined on surface R for LSH-A20**R and surface L for LSH-A20**L. Refer to page 1567 for the base line.
*4: The dimensions in parentheses are the dimensions for LSH-A20*4.

● With switch, rail assembly

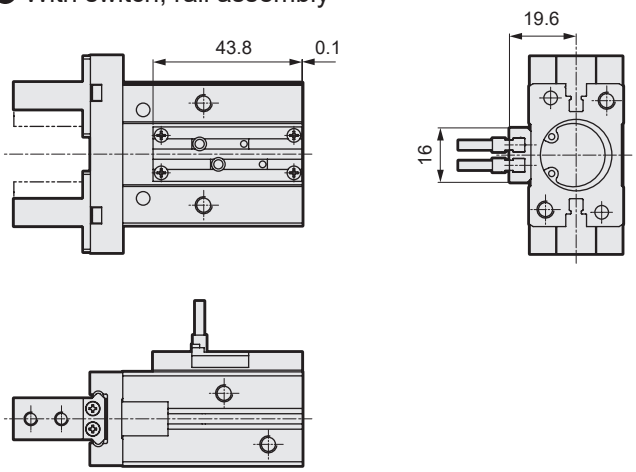

*5: Refer to page 1576 for cylinder switch precautions.

LCM
LCR
LCG
LCW
LCX
STM
STG
STS/STL
STR2
UCA2
ULK*
JSK/M2
JSG
JSC3/JSC4
USSD
UFCD
USC
UB
JSB3
LMB
LML
HCM
HCA
LBC
CAC4
UCAC2
CAC-N
UCAC-N
RCS2
RCC2
PCC
SHC
MCP
GLC
MFC
BBS
RRC
GRC
RV3*
NHS
HRL
LN
Hand
Chuk
MecHnd/Chuk
ShkAbs
FJ
FK
SpdContr
Ending
LSH-HP
LSH
FH100
BSA2
BHA/BHG
LHA
LHAG
HAP
HKP
HCP
HGP
HLF2
HLA/HLB
HLAG/HLBG
HLC
HLD
HMF
HMF-G
HMFB
HFP
FH500
HBL
HJL
HMD
HDL
HJD
BHE

Dimensions (bore size: ø25)

● LSH-A25*1N

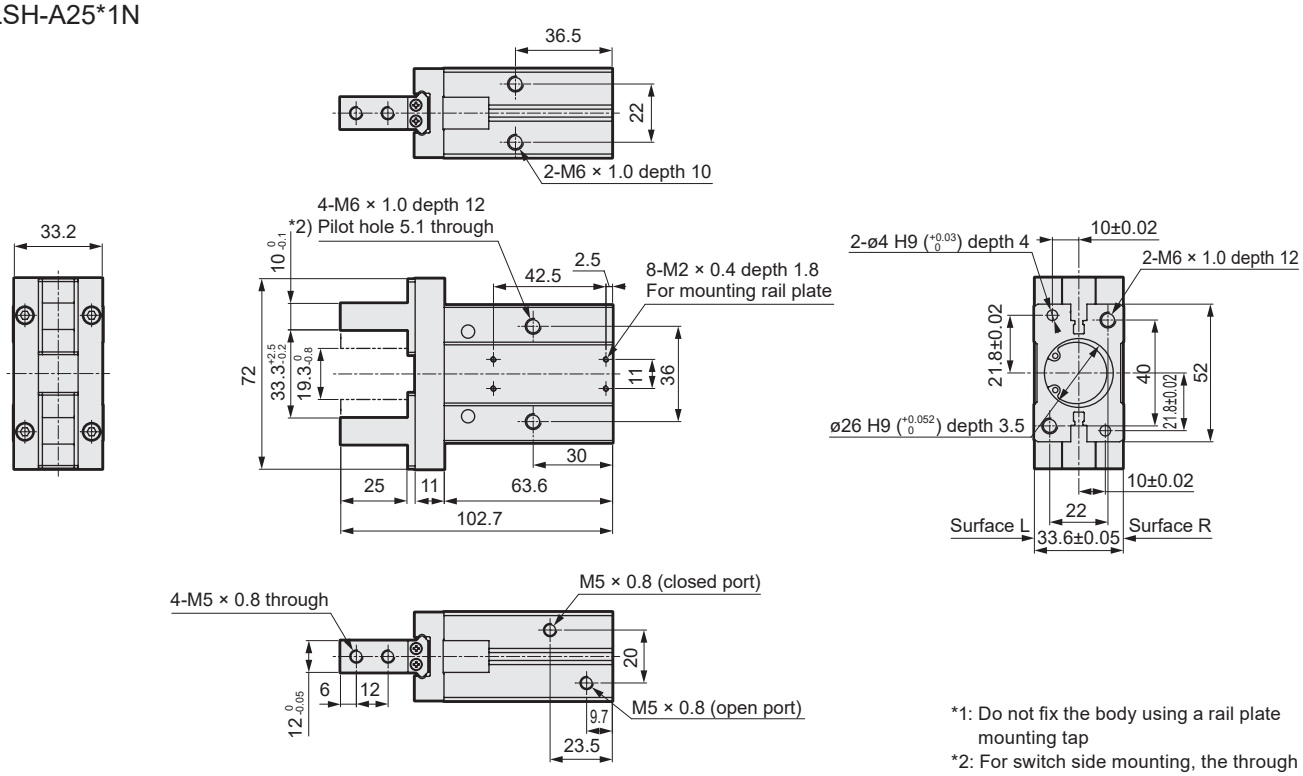

*1: Do not fix the body using a rail plate mounting tap
*2: For switch side mounting, the through hole cannot be used.

● LSH-A25*2N

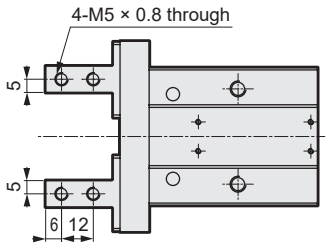

● LSH-A25*3N

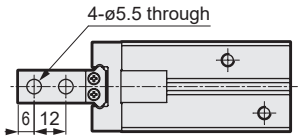

● LSH-A25*4N

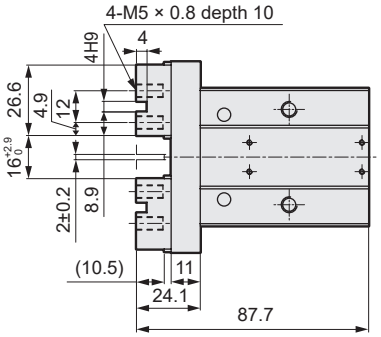

● LSH-A25**R / L

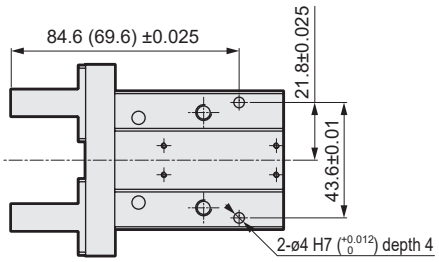

*3: Positioning holes are machined on surface R for LSH-A25**R and surface L for LSH-A25**L. Refer to page 1567 for the base line.
*4: The dimensions in parentheses are the dimensions for LSH-A25*4.

● With switch, rail assembly

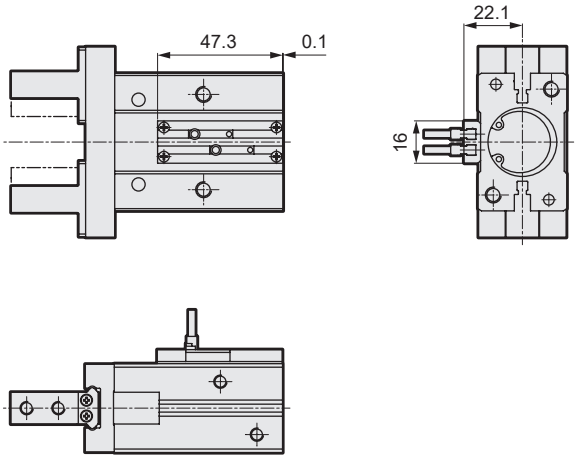

*5: Refer to page 1576 for cylinder switch precautions.

Dimensions (bore size: ø32)

● LSH-A32*1N

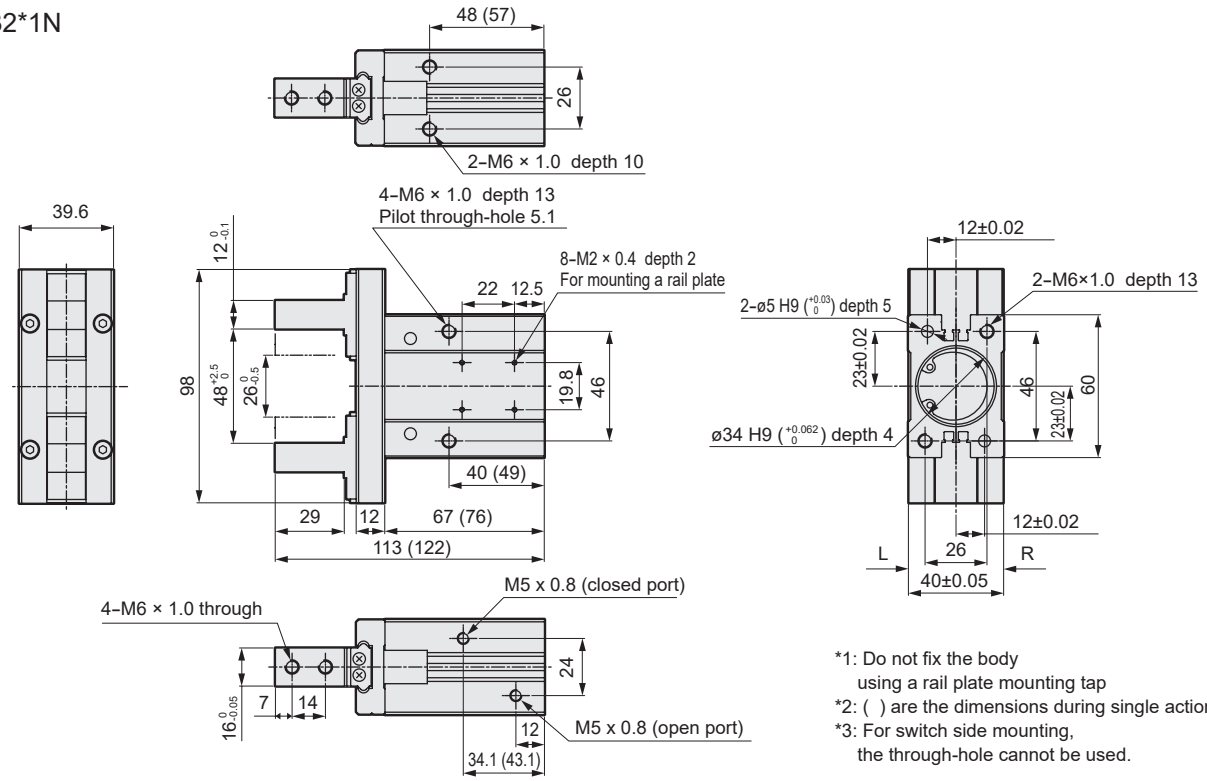

*1: Do not fix the body using a rail plate mounting tap
*2: ( ) are the dimensions during single action.
*3: For switch side mounting, the through-hole cannot be used.

● LSH-A32*2N

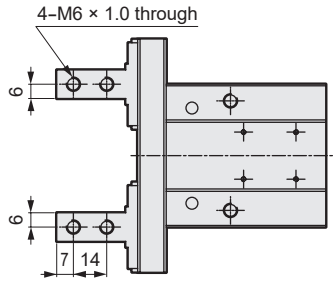

● LSH-A32*3N

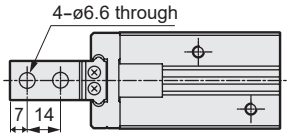

● LSH-A32*4N

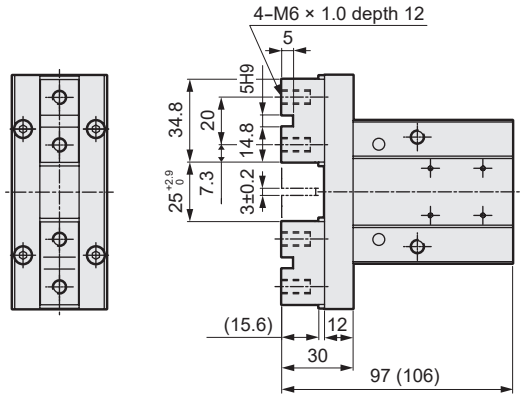

● LSH-A32*1/3R/L

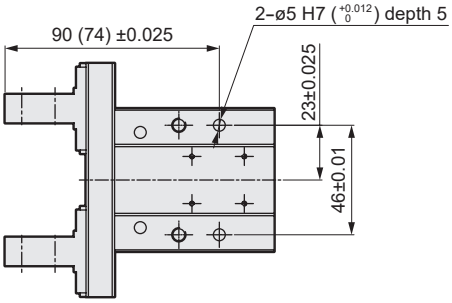

*4: Positioning holes are machined on surface R for LSH-A32**R and L for LSH-A32**L.
Refer to page 1567 for the base line.
*5: The dimensions in parentheses are the dimensions for LSH-A32*4.

● With F-switch, rail mounting

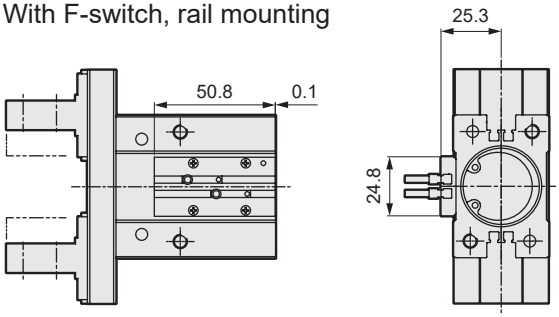

● With T-switch, rail mounting

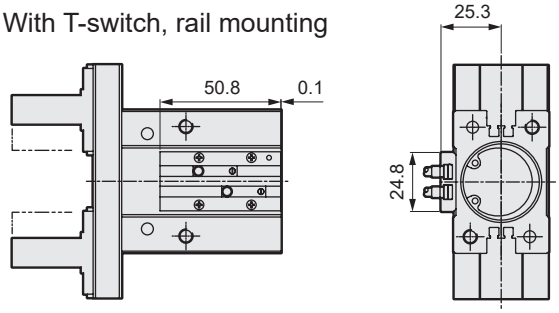

*6: Refer to page 1576 for cylinder switch precautions.

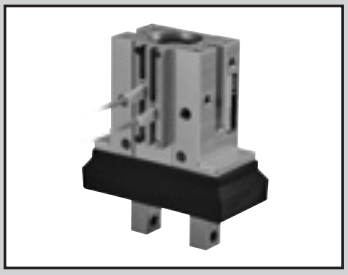

Linear Slide Hand double acting / single acting with rubber cover

LSH-G / LSH-F Series

● Operating stroke: 4, 6, 10, 14 , 22 mm

Double acting

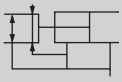

Single acting (normally open)

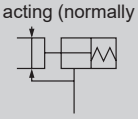

Single acting (normally closed)

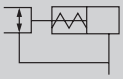

RoHS

Specifications

Descriptions		LSH-G, F					
Bore size	mm	ø6	ø10	ø16	ø20	ø25	ø32
Actuation		Double acting/single acting (normally open/normally closed)					
Working fluid		Compressed air					
Max. working pressure	MPa	0.7					
Min. working pressure MPa	Double acting	0.15	0.2	0.1			
	Single acting	0.3	0.35	0.25			-
Port size		M3		M5			
Ambient temperature	°C	−10 to 60°C (no freezing)					
Operating stroke	mm	4		6	10	14	22
Repeatability	mm	±0.01					
Weight Double acting (single acting)	kg	0.033	0.07	0.15	0.03 (0.035)	0.53 (0.535)	0.81
Lubrication		Not required					

Gripping force

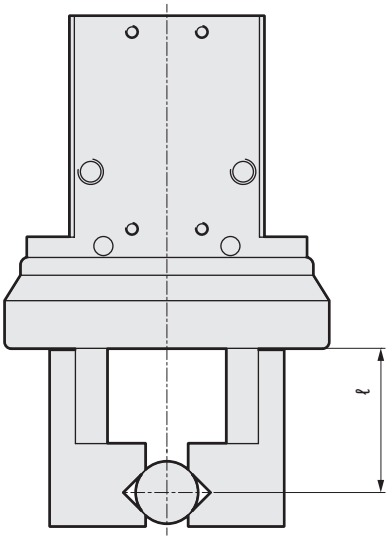

Unit: N

Bore size (mm)	Double acting	
	Open side	Closed side
ø6	6.1	3.3
ø10	17	9.8
ø16	40	30
ø20	66	42
ø25	104	65
ø32	193	158

Bore size (mm)	Single acting (normally open)	
		Closed side
ø6	-	1.9
ø10		6.3
ø16		24
ø20		28
ø25		45

Bore size (mm)	Single acting (normally closed)	
	Open side	
ø6	3.7	-
ø10	12	
ø16	31	
ø20	56	
ø25	83	

* At supply pressure of 0.5 MPa, ℓ = 20 mm, stroke center
*1:Avoid gripping the workpiece with single acting spring force as much as possible. The gripping force may become unstable, leading to operation failure.

Switch specifications

Item	Proximity 2-wire	Proximity 3-wire	Proximity 2-wire	Proximity 3-wire	
	F2S	F3S	F2H/F2V	F3H/F3V	F3PH/F3PV
Applications	Programmable Controller dedicated	Programmable For controller, relay	Programmable Controller dedicated	Programmable For controller, relay	
Output method	–	NPN output	–	NPN output	PNP output
Power supply voltage	–	10 to 28 VDC	–	10 to 28 VDC	4.5 to 28 VDC
Load voltage/ current	10 to 30 VDC 5 to 20 mA	30 VDC, 50 mA or less	10 to 30 VDC 5 to 20 mA	30 VDC, 50 mA or less	
Indicator	LED (Lit when ON)		Yellow LED (Lit when ON)		
Leakage current	1 mA or less	10 μA or less	1 mA or less	10 μA or less	
Shock resistance	980 m/s^2				
Weight g	1 m:10 3 m:29				

*1: The F-switch uses a bend-resistant lead wire by default.

Item	Proximity 2-wire		Proximity 3-wire	
	T2H/T2V	T2HR3/T2VR3 (Lead wire, a bend-resistant type)	T3H/T3V	T3PH/T3PV
Applications	Programmable Controller dedicated		Programmable For controller, relay	
Output method	–	–	NPN output	PNP output
Power supply voltage	–	–	DC10 to 28V	
Load voltage/ current	10 to 30 VDC 5 to 20 mA	10 to 30 VDC 5 to 20 mA	30 VDC or less 100 mA or less	
Indicator	Red LED (Lit when ON)	Red LED (Lit when ON)	Red LED (Lit when ON)	Yellow LED (Lit when ON)
Leakage current	1 mA or less	1 mA or less	10 μA or less	
Shock resistance	980 m/s^2			
Weight g	1 m: 18 g 3 m: 49 g			

How to order

Without switch (built-in magnet for switch)

LSH - G 06 D 1 R ——— HP1

With switch (built-in magnet for switch)

LSH - G 06 D 1 R - F2H - D - HP1

Ⓐ Rubber cover
Ⓑ Bore size
Ⓒ Actuation
Ⓓ Finger
Ⓔ Grip center reference, high precision positioning hole
Ⓕ Switch model No.
Ⓖ Switch quantity

Code	Description
Ⓐ Rubber cover	
G	Chloroprene rubber
F	Fluoro rubber
Ⓑ Bore size (mm)	
06	ø6
10	ø10
16	ø16
20	ø20
25	ø25
32	ø32
Ⓒ Actuation	
D	Double acting
S	Single acting / normally open (ø32 cannot be selected)
C	Single acting / normally closed (ø32 cannot be selected)
Ⓓ Finger	
1	Basic
Ⓔ Grip center reference, high precision positioning hole	
N	None
L	Refer to the figure at left.
R	

Ⓕ Switch model No.

Blank	No switch, with F-switch rail
N	No switch, no switch rail
A	No switch, with T-switch rail (ø32 only)

Straight lead wire	L-shaped lead wire	Contact	Voltage AC	Voltage DC	Indicator	Lead wire
–	F2S*	Proximity		●	1-color LED	2-wire
–	F3S*			●		3-wire
F2H*	F2V*			●		2-wire
F3H*	F3V*			●		3-wire
F3PH*	F3PV*			●		3-wire
T2H*	T2V*			●		2-wire
T2HR3	T2VR3			●		2-wire
T3H*	T3V*			●		3-wire
T3PH*	T3PV*			●		3-wire

*** Lead wire length**

Blank	1 m (standard)
3	3 m (option)

Ⓖ Switch quantity

R	1 on open side
H	1 on closed side
D	2

*1: If the one with the switch is selected, the product comes with a rail plate corresponding to the switch.
*2: Only ø32 can be selected with the T-switch.
*3: Refer to page 1577 for cylinder switch precautions.

Grip center reference, high precision positioning hole position diagram

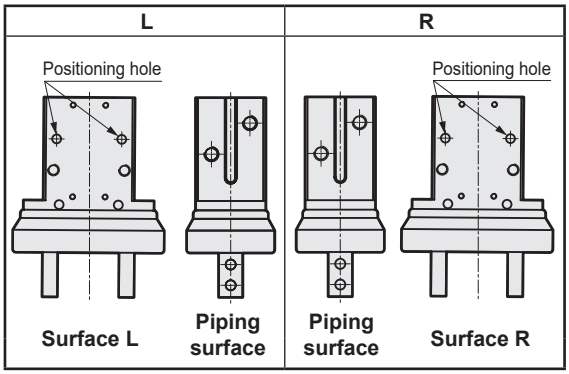

Refer to the Dimensions (pages 1526 to 1531) and page 1567 for details.

How to order switch

SW - F2H*

Switch model No. (Item Ⓕ above)

Switch mounting availability table

Model No.	Switch model No.	Side mounting	Rail mounting
LSH-G/F06	F2/3□	●	–
	F2/3S	–	●
LSH-G/F10	F2/3□	●	●
	F2/3S	●	●
LSH-G/F16	F2/3□	●	●
	F2/3S	●	●
LSH-G/F20	F2/3□	●	●
	F2/3S	●	●
LSH-G/F25	F2/3H·PH·PV	–	●
	F2/3V	●	●
	F2/3S	●	●
LSH-G/F32	F2/3□	●	●
	F2/3S	●	●
	T2/3□	–	●

[Example of model No.]

LSH-G06D1R-F2H-D-HP1

Model: Linear Slide Hand

Ⓐ Rubber cover	: Chloroprene rubber
Ⓑ Bore size	: ø6
Ⓒ Actuation	: Double acting
Ⓓ Finger	: Basic
Ⓔ Grip center reference, high precision positioning hole	: R
Ⓕ Switch model No.	: Proximity F2H, lead wire 1 m
Ⓖ Switch quantity	: 2

Internal structure and parts list

● LSH-G06 / LSH-F06

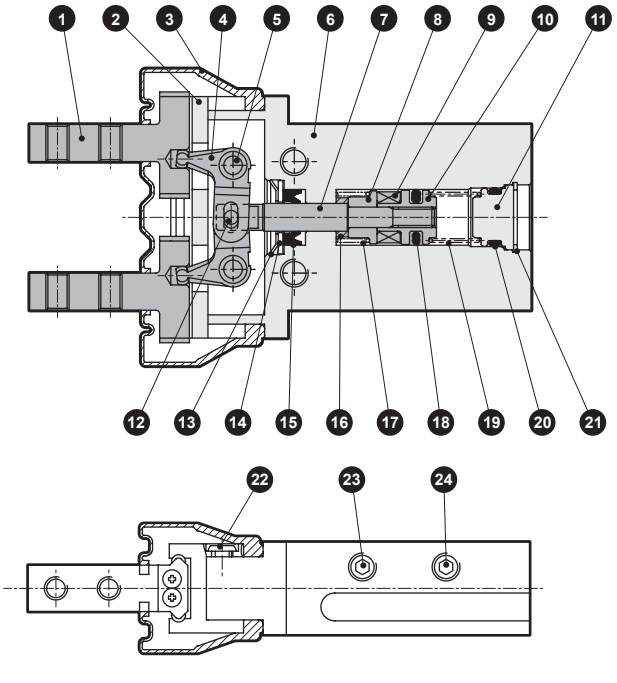

● LSH-G10 to G25 / LSH-F10 to F25

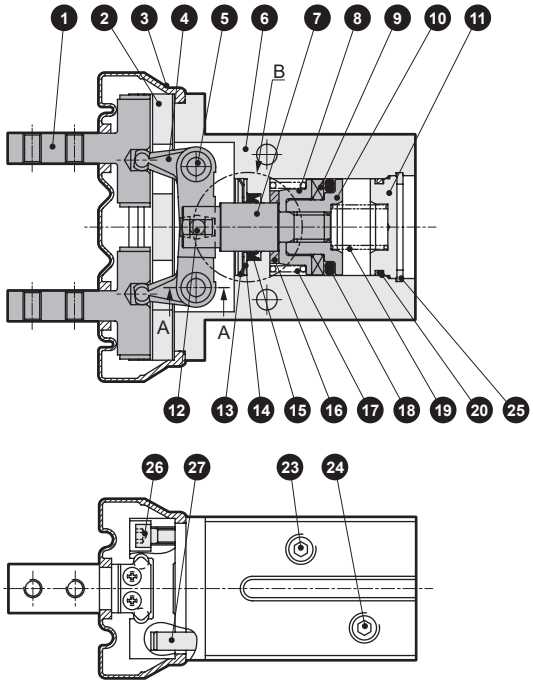

Cross-section A-A

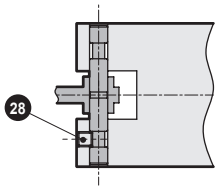

B part ø20, 25, 32

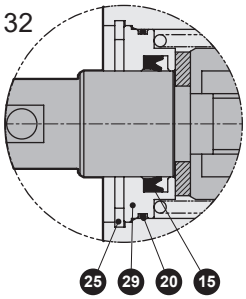

Parts list

No.	Part name	Material	Remarks	No.	Part name	Material	Remarks
1	Finger	Stainless steel		16	Cushion rubber	Urethane rubber	
2	Linear guide	Stainless steel		17	Coil spring	Piano wire	Single acting C
3	Rubber cover	LSH-G : Chloroprene LSH-F : Fluorine		18	Piston packing	Nitrile rubber	
4	Lever	Stainless steel		19	Coil spring	Piano wire	Single acting S
5	Fulcrum axis	Steel		20	O-ring	Nitrile rubber	
6	Body	Aluminum alloy		21	C-snap ring	Steel	
7	Piston rod	Stainless steel		22	Pan head machine screw	Stainless steel	
8	Spring bracket	Aluminum alloy		23	Plug	Stainless steel	Single acting C
9	Magnet			24	Plug	Stainless steel	Single acting S
10	Piston	Aluminum alloy		25	C-snap ring	Stainless steel	
11	Head cover	Aluminum alloy		26	Hexagon socket head cap screw	Stainless steel	ø32 is steel
12	Operation shaft	Steel alloy		27	Pin	Steel	
13	CR ring	Stainless steel		28	Hexagon socket set screw	Stainless steel	
14	Cap	Stainless steel		29	Rod metal	Aluminum alloy	
15	Rod packing	Nitrile rubber					

Repair parts list

Bore size	Kit No.	Repair part No.	Rubber cover (part No. 3)		Rail plate kit No.		
			LSH-G Chloroprene	LSH-F Fluorine	For F-switch	For T-switch	Description
ø6	Cannot be disassembled	–	LSH-G06K	LSH-F06K	LSH-RPF-06-HP	–	Rail plate small screw
ø10	LSH-10K-HP	13 15 18 20	LSH-G10K	LSH-F10K	LSH-RPF-10-HP	–	
ø16	LSH-16K-HP		LSH-G16K	LSH-F16K	LSH-RPF-16-HP	–	
ø20	LSH-20K-HP	15 18 20	LSH-G20K	LSH-F20K	LSH-RPF-20-HP	–	
ø25	LSH-25K-HP		LSH-G25K	LSH-F25K	LSH-RPF-25-HP	–	
ø32	LSH-32K-HP		LSH-G32K	LSH-F32K	LSH-RPF-32-HP	LSH-RPT-32-HP	

LCM
LCR
LCG
LCW
LCX
STM
STG
STS/STL
STR2
UCA2
ULK*
JSK/M2
JSG
JSC3/JSC4
USSD
UFCD
USC
UB
JSB3
LMB
LML
HCM
HCA
LBC
CAC4
UCAC2
CAC-N
UCAC-N
RCS2
RCC2
PCC
SHC
MCP
GLC
MFC
BBS
RRC
GRC
RV3*
NHS
HRL
LN
Hand
Chuk
MecHnd/Chuk
ShkAbs
FJ
FK
SpdContr
Ending
LSH-HP
LSH
FH100
BSA2
BHA/BHG
LHA
LHAG
HAP
HKP
HCP
HGP
HLF2
HLA/HLB
HLAG/HLBG
HLC
HLD
HMF
HMF-G
HMFB
HFP
FH500
HBL
HJL
HMD
HDL
HJD
BHE

Dimensions (bore size: ø6)

● LSH-G06, LSH-F06

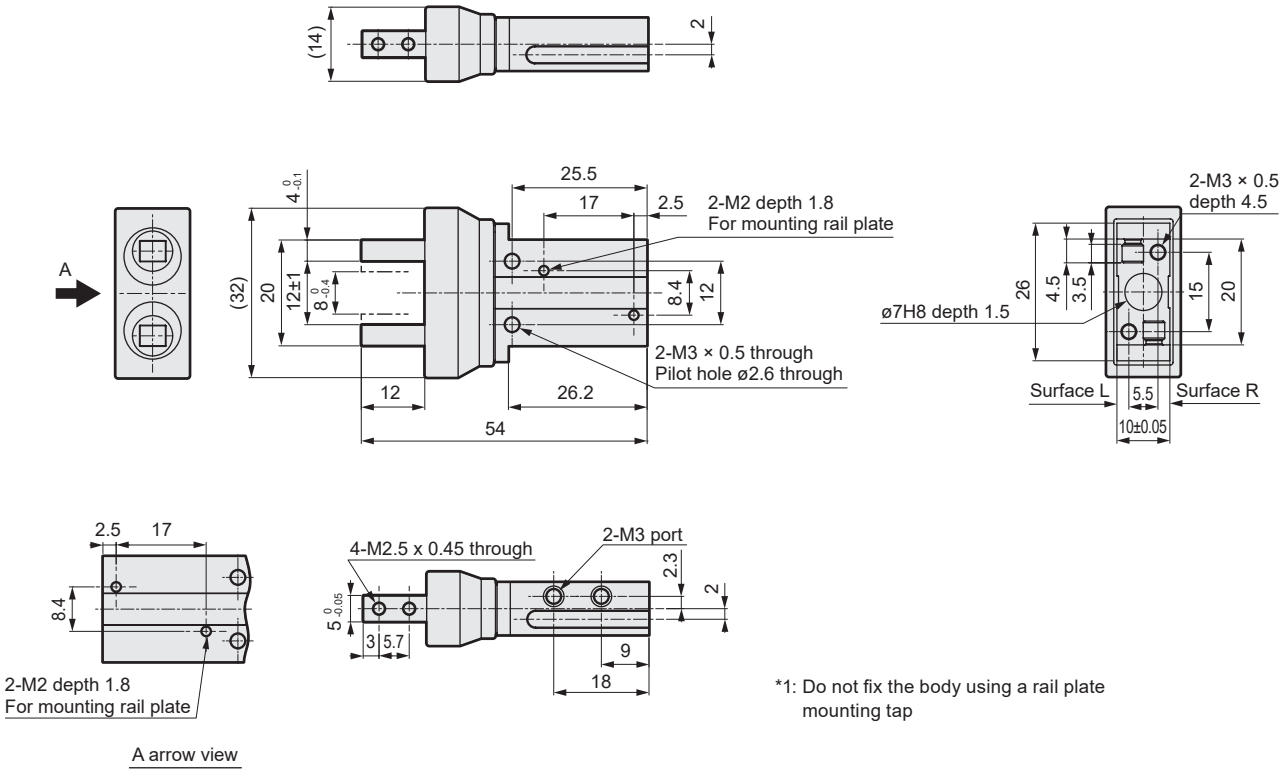

*1: Do not fix the body using a rail plate mounting tap

● LSH-G06*1R / L, LSH-F06*1R / L

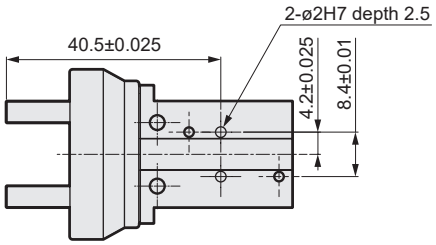

*2: Pin holes are machined on surface R for LSH-G06*1R and L for LSH-G06*1L.
Refer to page 1567 for the base line.

● With switch, rail assembly

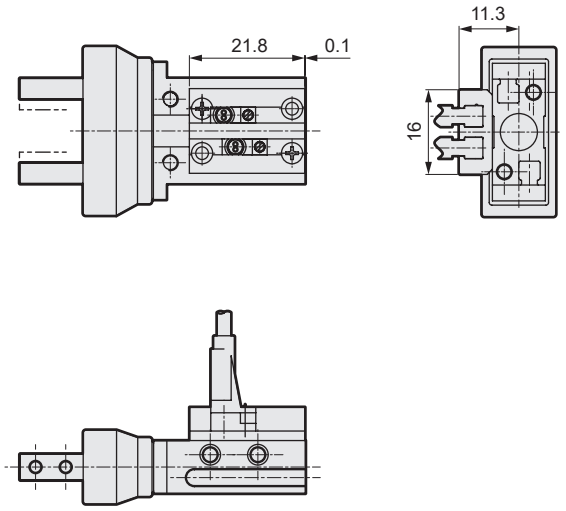

*3: Refer to Page 1577 for cylinder switch precautions.
*4: Use fittings with an outer diameter of ø9 or less to prevent them from interfering with each other.

Dimensions (bore size: ø10)

● LSH-G10, LSH-F10

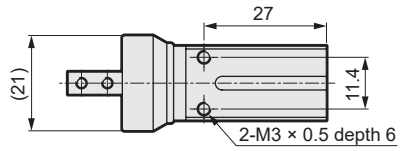

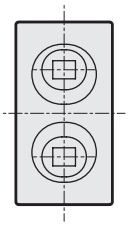

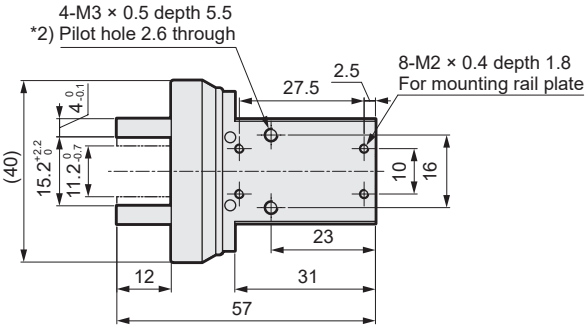

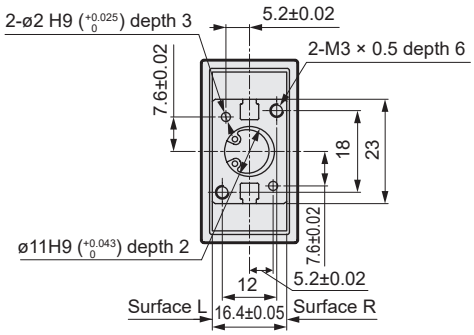

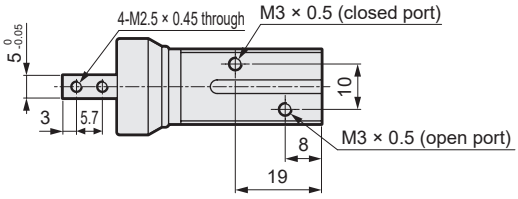

*1: Do not fix the body using a rail plate mounting tap
*2: For switch side/rail mounting, the through hole cannot be used.

● LSH-G10*1R / L, LSH-F10*1R / L

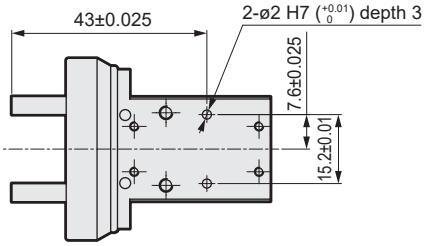

*3: Pin holes are machined on surface R for LSH-G10*1R and L for LSH-G10*1L. Refer to page 1567 for the base line.

● With switch, rail assembly

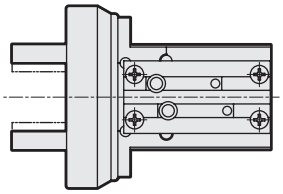

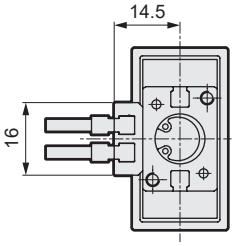

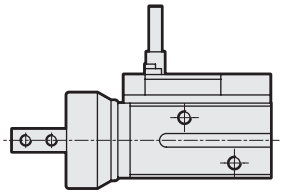

*4: Refer to page 1577 for cylinder switch precautions.

LCM
LCR
LCG
LCW
LCX
STM
STG
STS/STL
STR2
UCA2
ULK*
JSK/M2
JSG
JSC3/JSC4
USSD
UFCD
USC
UB
JSB3
LMB
LML
HCM
HCA
LBC
CAC4
UCAC2
CAC-N
UCAC-N
RCS2
RCC2
PCC
SHC
MCP
GLC
MFC
BBS
RRC
GRC
RV3*
NHS
HRL
LN
Hand
Chuk
MecHnd/Chuk
ShkAbs
FJ
FK
SpdContr
Ending
LSH-HP
LSH
FH100
BSA2
BHA/BHG
LHA
LHAG
HAP
HKP
HCP
HGP
HLF2
HLA/HLB
HLAG/HLBG
HLC
HLD
HMF
HMF-G
HMFB
HFP
FH500
HBL
HJL
HMD
HDL
HJD
BHE

Dimensions (bore size: ø16)

● LSH-G16, LSH-F16

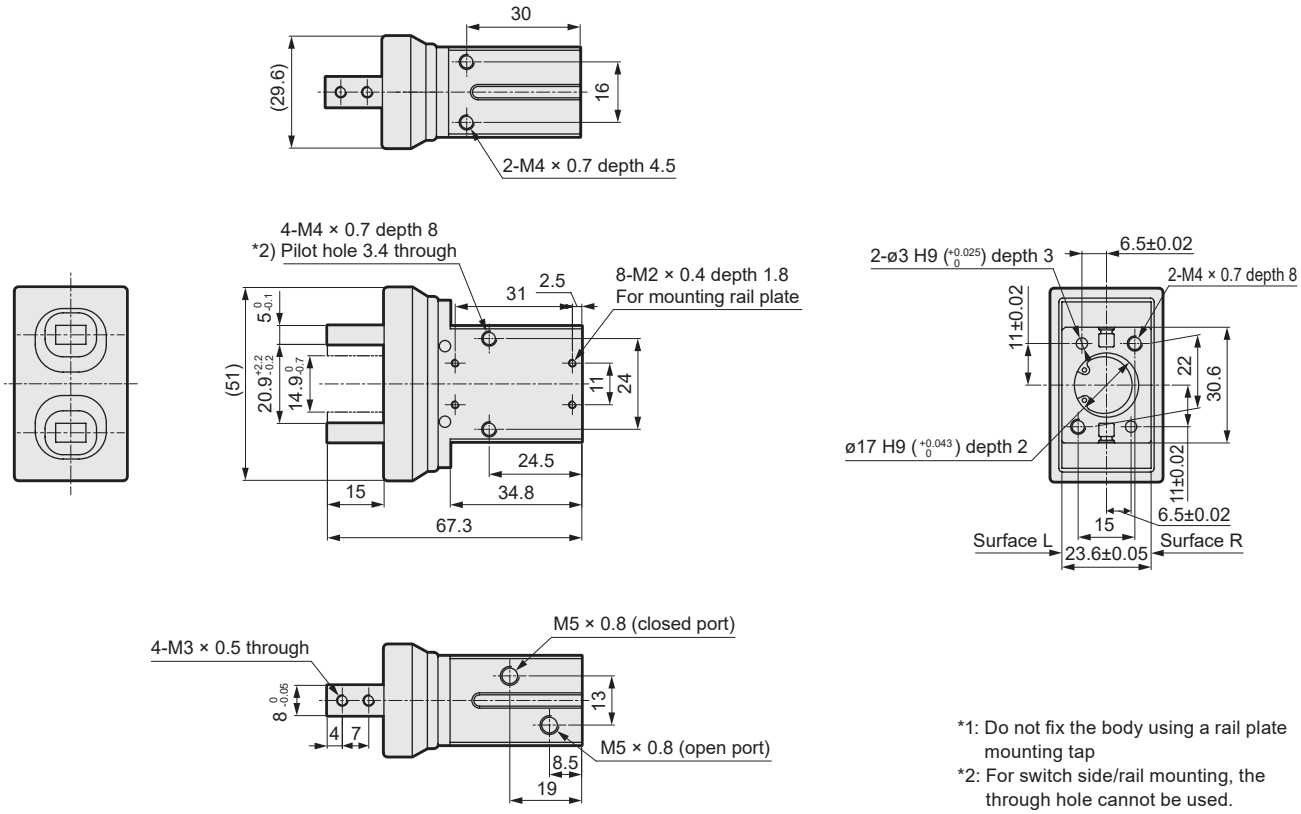

*1: Do not fix the body using a rail plate mounting tap
*2: For switch side/rail mounting, the through hole cannot be used.

● LSH-G16*1R / L, LSH-F16*1R / L

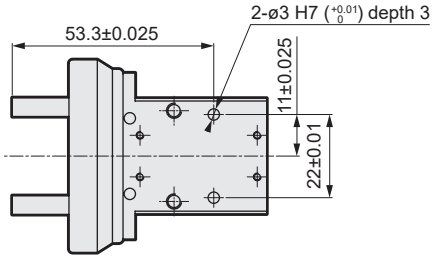

*3: Pin holes are machined on surface R for LSH-G16*1R and L for LSH-G16*1L. Refer to page 1567 for the base line.

● With switch, rail assembly

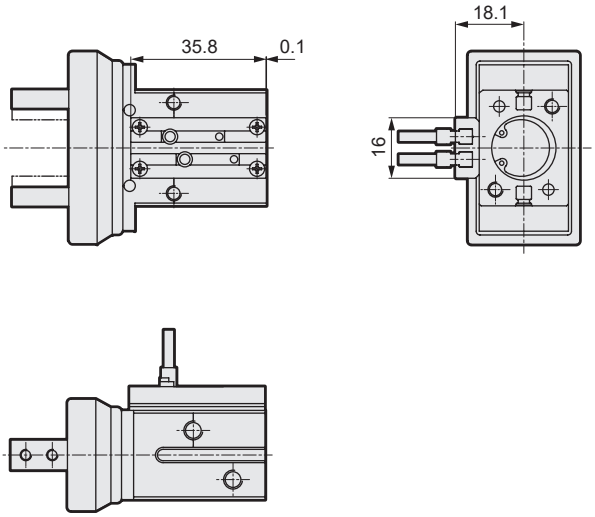

*4: Refer to page 1577 for cylinder switch precautions.

Dimensions (bore size: ø20)

● LSH-G20, LSH-F20

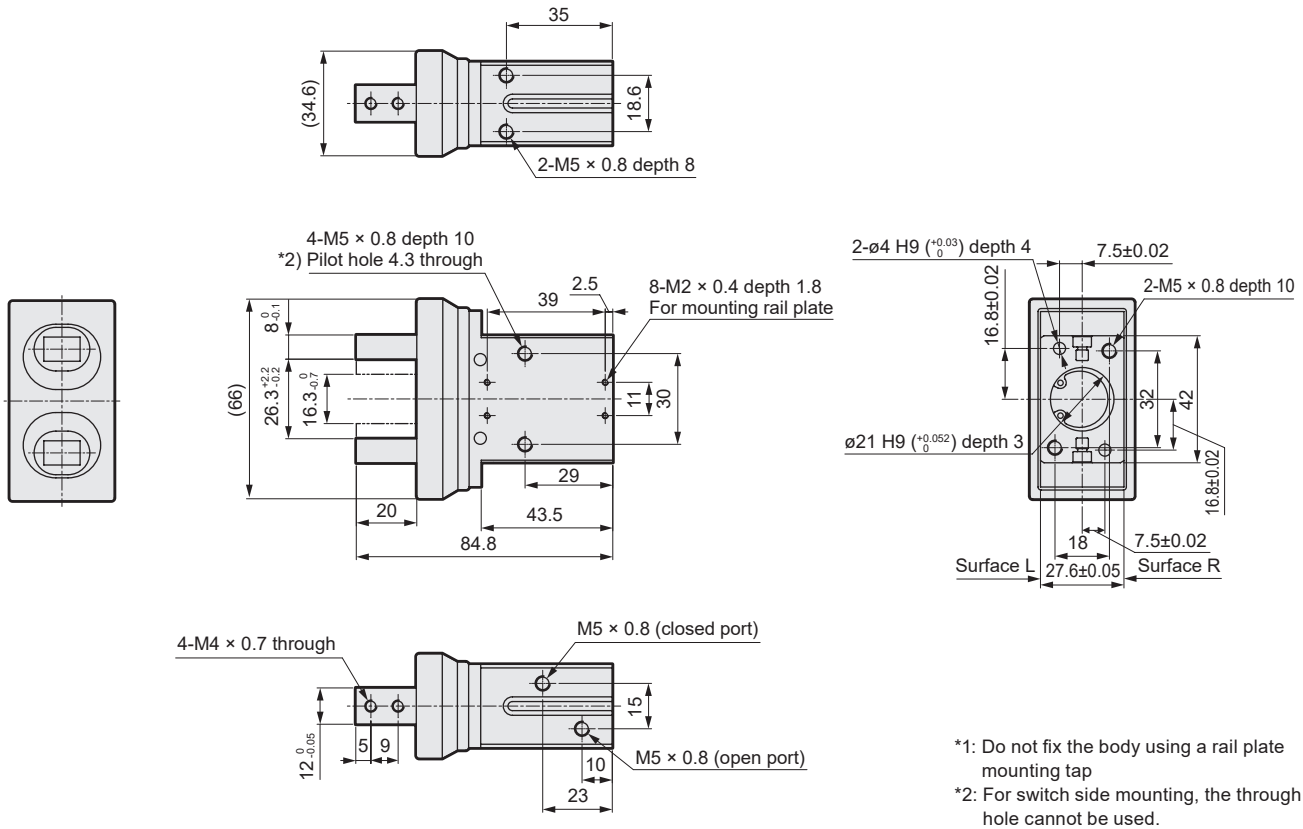

*1: Do not fix the body using a rail plate mounting tap
*2: For switch side mounting, the through hole cannot be used.

● LSH-G20*1R / L, LSH-F20*1R / L

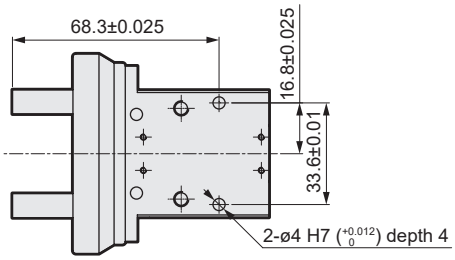

*3: Pin holes are machined on surface R for LSH-G20*1R and L for LSH-G20*1L.
Refer to page 1567 for the base line.

● With switch, rail assembly

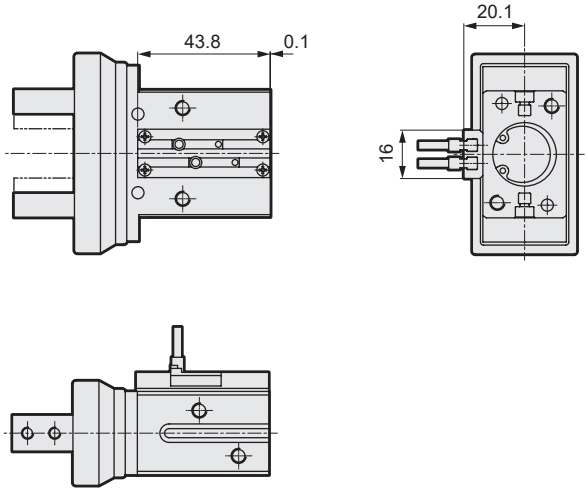

*4: Refer to page 1577 for cylinder switch precautions.

LCM
LCR
LCG
LCW
LCX
STM
STG
STS/STL
STR2
UCA2
ULK*
JSK/M2
JSG
JSC3/JSC4
USSD
UFCD
USC
UB
JSB3
LMB
LML
HCM
HCA
LBC
CAC4
UCAC2
CAC-N
UCAC-N
RCS2
RCC2
PCC
SHC
MCP
GLC
MFC
BBS
RRC
GRC
RV3*
NHS
HRL
LN
Hand
Chuk
MecHnd/Chuk
ShkAbs
FJ
FK
SpdContr
Ending
LSH-HP
LSH
FH100
BSA2
BHA/BHG
LHA
LHAG
HAP
HKP
HCP
HGP
HLF2
HLA/HLB
HLAG/HLBG
HLC
HLD
HMF
HMF-G
HMFB
HFP
FH500
HBL
HJL
HMD
HDL
HJD
BHE

Dimensions (bore size: ø25)

● LSH-G25, LSH-F25

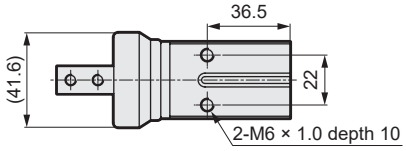

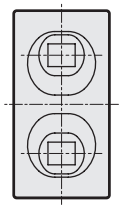

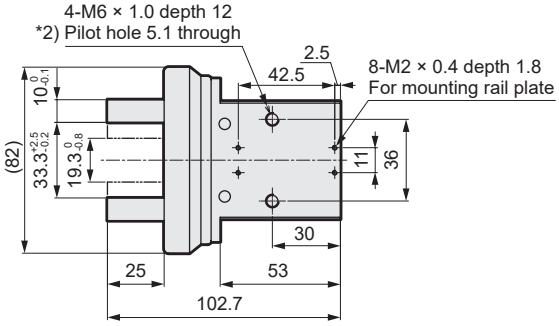

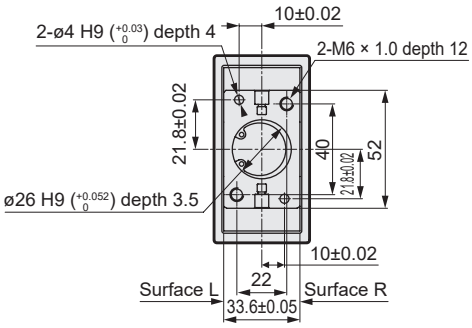

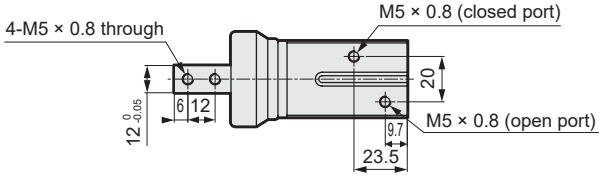

*1: Do not fix the body using a rail plate mounting tap
*2: For switch side mounting, the through hole cannot be used.

● LSH-G25*1R / L, LSH-F25*1R / L

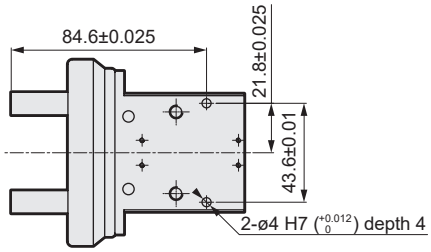

*3: Positioning holes are machined on surface R for LSH-G25*1R and L for LSH-G25*1L.
Refer to page 1567 for the base line.

● With switch, rail assembly

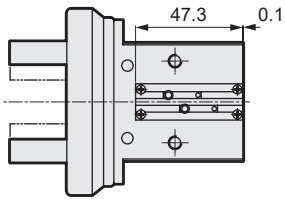

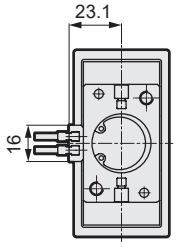

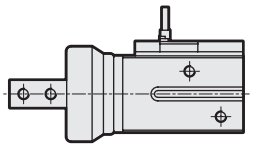

*4: Refer to page 1577 for cylinder switch precautions.

Dimensions (bore size: ø32)

● LSH-G32, LSH-F32

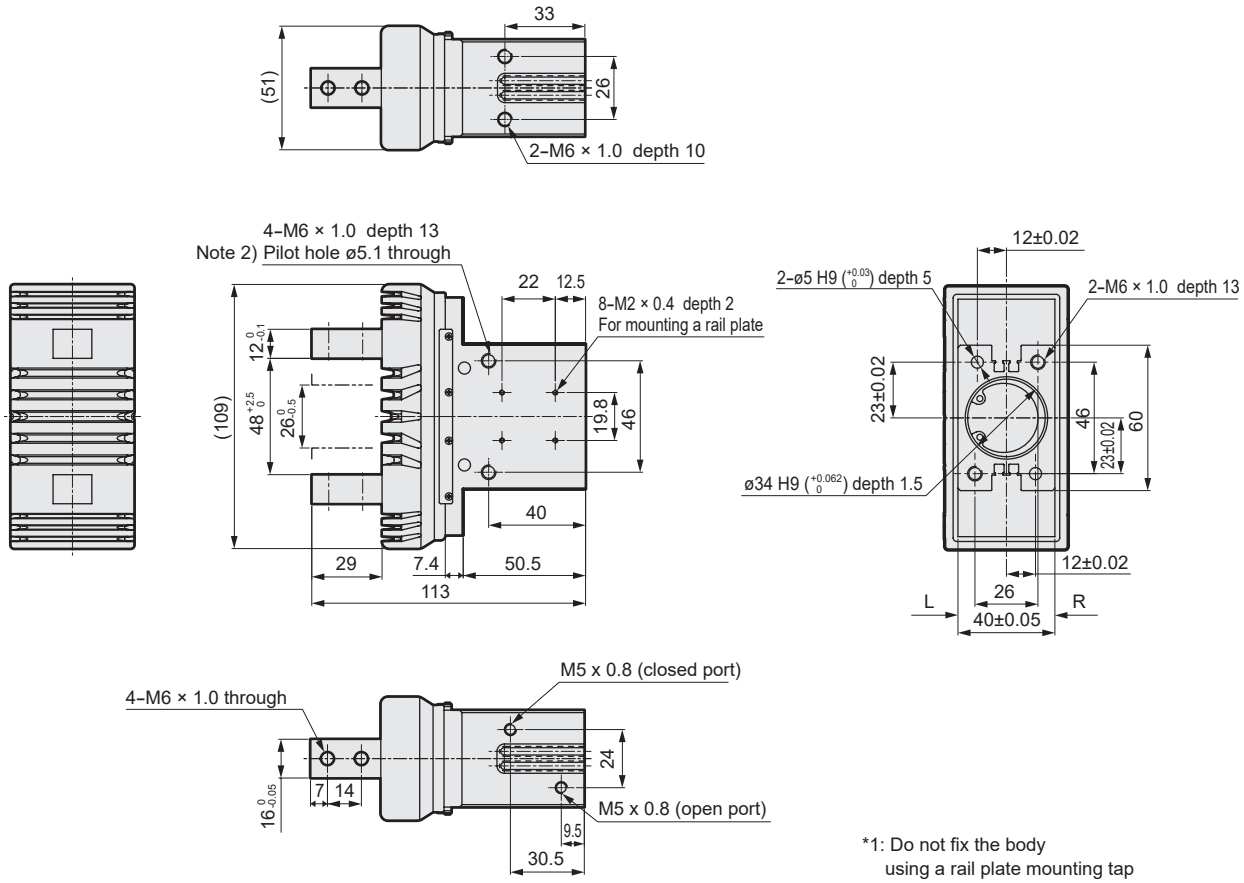

*1: Do not fix the body using a rail plate mounting tap

● LSH-G32D1R/L, LSH-F32D1R/L

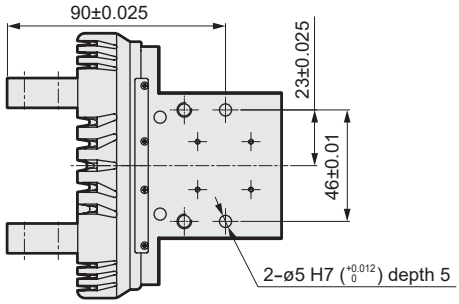

*2: Positioning holes are machined on surface R for LSH-G32D1R and L for LSH-G32D1L. Refer to page 1567 for the base line.

● With F-switch, rail mounting

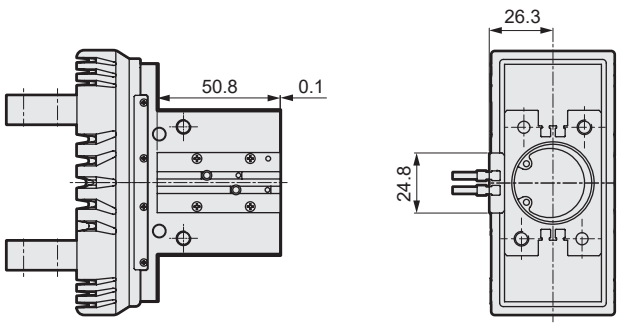

● With T-switch, rail mounting

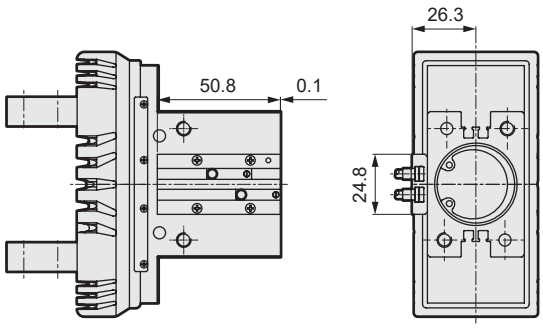

*3: Refer to page 1577 for cylinder switch precautions.

Linear Slide Hand long stroke Double acting type/Single acting type

LSHL-A Series

● Operating stroke: 8, 12, 18, 22 mm

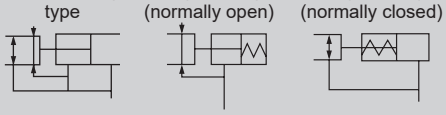

RoHS

Specifications

Descriptions		LSHL-A			
Bore size mm		ø10	ø16	ø20	ø25
Actuation		Double acting/single acting (normally open/normally closed)			
Working fluid		Compressed air			
Max. working pressure MPa		0.7			
Min. working pressure MPa	Double acting	0.2	0.1		
	Single acting	0.35	0.25		
Port size		M3	M5		
Ambient temperature °C		-10 to 60 (no freezing)			
Operating stroke mm		8	12	18	22
Repeatability mm		±0.01			
Weight Double acting (Single acting) kg	Finger OP: 1, 2, 3	0.065 (0.075)	0.155 (0.165)	0.315 (0.335)	0.54 (0.585)
	Finger OP: 4		0.16 (0.17)	0.32 (0.34)	0.545 (0.59)
Lubrication		Not required			

Gripping force

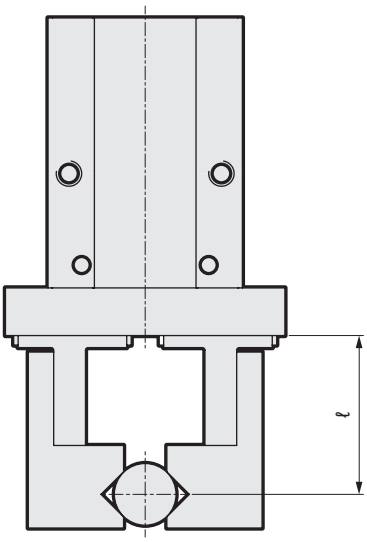

Unit: N

Bore size (mm)	Double acting	
	Open side	Closed side
ø10	17	11
ø16	45	34
ø20	66	42
ø25	104	65

Bore size (mm)	Single acting (normally open)	
		Closed side
ø10	-	7.1
ø16		27
ø20		33
ø25		50

Bore size (mm)	Single acting (normally closed)	
	Open side	
ø10	13	-
ø16	38	
ø20	57	
ø25	85	

* At supply pressure of 0.5 MPa, ℓ = 20 mm, stroke center
*1: Avoid gripping the workpiece with single acting spring force as much as possible. The gripping force may become unstable, leading to operation failure.

Switch specifications

Item	Proximity 2-wire	Proximity 3-wire	Proximity 2-wire	Proximity 3-wire	
	F2S	F3S	F2H/F2V	F3H/F3V	F3PH/F3PV
Applications	Dedicated for programmable controller	For programmable controller, relay	Dedicated for programmable controller	For programmable controller, relay	
Output method	-	NPN output	-	NPN output	PNP output
Power supply voltage	-	10 to 28 VDC	-	10 to 28 VDC	4.5 to 28 VDC
Load voltage/current	10 to 30 VDC 5 to 20mA	30 VDC, 50 mA or less	10 to 30 VDC 5 to 20mA	30 VDC, 50 mA or less	
Indicator lamp	LED (Lit when ON)		Yellow LED (Lit when ON)		
Leakage current	1 mA or less	10 μA or less	1 mA or less	10 μA or less	
Shock resistance	980m/s^2				
Weight g	1m:10 3m:29				

*1: The F-switch uses a bend-resistant lead wire by default.

How to order

Without switch (built-in magnet for switch)

LSHL - A 10 D 1 R ———— HP1

With switch (built-in magnet for switch)

LSHL - A 10 D 1 R - F2H - D - HP1

Ⓐ Rubber cover
Ⓑ Bore size
Ⓒ Actuation
Ⓓ Finger
Ⓔ Grip center reference, high precision positioning hole
Ⓕ Switch model No.
Ⓖ Switch quantity

Code	Description
Ⓐ Rubber cover	
A	Without rubber cover
Ⓑ Bore size (mm)	
10	ø10
16	ø16
20	ø20
25	ø25
Ⓒ Actuation	
D	Double acting
S	Single acting/normally open
C	Single acting/normally closed
Ⓓ Finger	
1	Basic
2	Side tap
3	Through hole
4	Flat
Ⓔ Grip center reference, high precision positioning hole	
N	None
L	Refer to the figure at left.
R	

Ⓕ Switch model No.

Blank	Without switch, rail plate attached
N	Without switch or rail plate

Straight lead wire	L-shaped lead wire	Contact	Voltage AC	Voltage DC	Indicator	Lead wire
–	F2S*	Proximity		●	1-color LED	2-wire
–	F3S*			●		3-wire
F2H*	F2V*			●		2-wire
F3H*	F3V*			●		3-wire
F3PH*	F3PV*			●		3-wire

* Lead wire length	
Blank	1 m (standard)
3	3 m (option)

Ⓖ Switch quantity	
R	1 on open side
H	1 on closed side
D	2

*1: When selecting "With switch", a rail plate is attached.
*2: Refer to page 1578 for cylinder switch precautions.

Grip center reference, high precision positioning hole position diagram

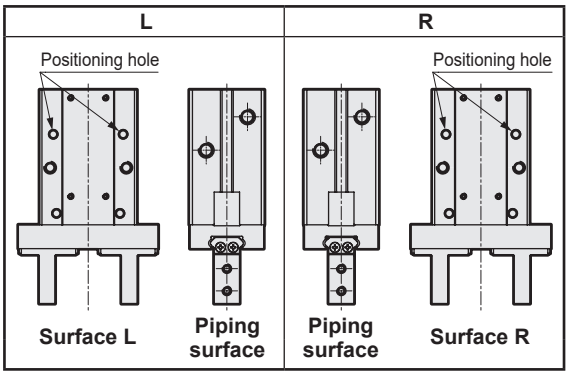

Refer to the Dimensions (page 1535 to 1538) and page 1567 for details.

How to order switch

SW - F2H*

Switch model No. (Item Ⓕ above)

[Example of model No.]

LSHL-A10D1R-N-HP1

Model: Linear Slide Hand, long stroke

Ⓐ Rubber cover	: Without rubber cover
Ⓑ Bore size	: ø10
Ⓒ Actuation	: Double acting
Ⓓ Finger	: Basic
Ⓔ Grip center reference, high precision positioning hole	: R
Ⓕ Switch model No.	: Without switch or rail plate

Switch mounting availability table

Model No.	Switch model No.	Side mounting	Rail mounting
LSHL-A10	F2/3□	●	●
	F2/3S	●	●
LSHL-A16	F2/3□	●	●
	F2/3S	●	●
LSHL-A20	F2/3□	●	●
	F2/3S	●	●
LSHL-A25	F2/3□	●	●
	F2/3S	●	●

LCM
LCR
LCG
LCW
LCX
STM
STG
STS/STL
STR2
UCA2
ULK*
JSK/M2
JSG
JSC3/JSC4
USSD
UFCD
USC
UB
JSB3
LMB
LML
HCM
HCA
LBC
CAC4
UCAC2
CAC-N
UCAC-N
RCS2
RCC2
PCC
SHC
MCP
GLC
MFC
BBS
RRC
GRC
RV3*
NHS
HRL
LN
Hand
Chuk
MecHnd/Chuk
ShkAbs
FJ
FK
SpdContr
Ending
LSH-HP
LSH
FH100
BSA2
BHA/BHG
LHA
LHAG
HAP
HKP
HCP
HGP
HLF2
HLA/HLB
HLAG/HLBG
HLC
HLD
HMF
HMF-G
HMFB
HFP
FH500
HBL
HJL
HMD
HDL
HJD
BHE

Internal structure and parts list

● LSHL-A10 to 25

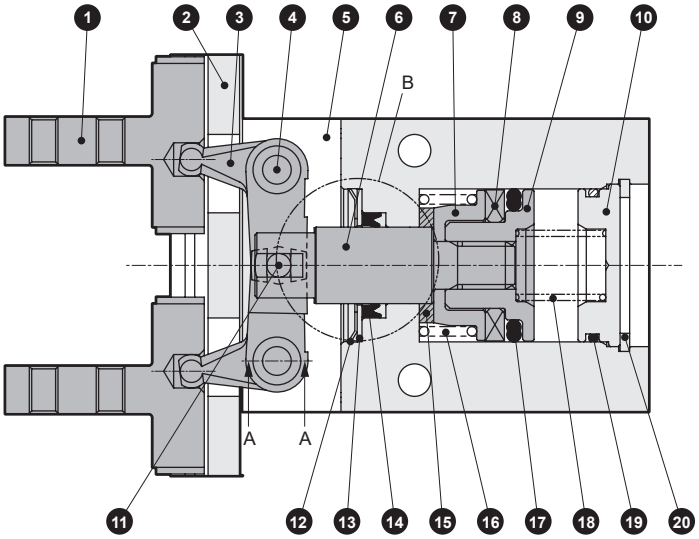

Cross-section A-A

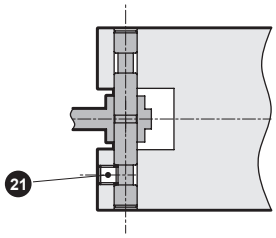

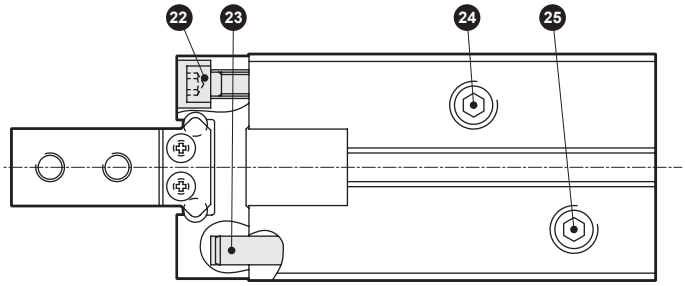

B part ø20, 25

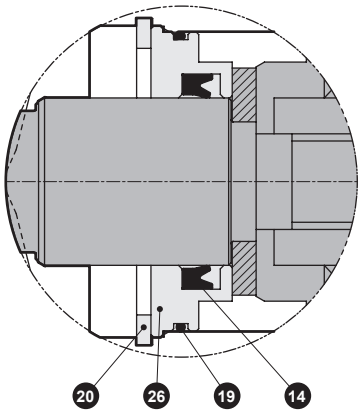

Parts list

No.	Part name	Material	Remarks	No.	Part name	Material	Remarks
1	Finger	Stainless steel		14	Rod packing	Nitrile rubber	
2	Linear guide	Stainless steel		15	Cushion rubber	Urethane rubber	
3	Lever	Stainless steel		16	Cylindrical spring	Piano wire	Single acting C
4	Fulcrum axis	Steel		17	Piston packing	Nitrile rubber	
5	Body	Aluminum alloy		18	Cylindrical spring	Piano wire	Single acting S
6	Piston rod	Stainless steel		19	O-ring	Nitrile rubber	
7	Spring bracket	Aluminum alloy		20	C-snap ring	Stainless steel	
8	Magnet			21	Hexagon socket set screw	Stainless steel	
9	Piston	Aluminum alloy		22	Hexagon socket head cap screw	Stainless steel	
10	Head cover	Aluminum alloy		23	Pin	Steel	
11	Operation shaft	Steel alloy		24	Plug	Stainless steel	Single acting C
12	CR ring	Stainless steel		25	Plug	Stainless steel	Single acting S
13	Cap	Stainless steel		26	Rod metal	Aluminum alloy	

Repair parts list

Bore size	Kit No.	Repair part No.	Rail plate kit No.		
			For double acting	For single acting	Description
ø10	LSHL-10K-HP	12 14 17 19	LSHL-RPF-10-HP	LSHL-RPF2-10-HP	Rail plate small screw
ø16	LSHL-16K-HP		LSHL-RPF-16-HP		
ø20	LSHL-20K-HP	14 17 19	LSHL-RPF-20-HP		
ø25	LSHL-25K-HP		LSHL-RPF-25-HP		

Dimensions (bore size: ø10)

● LSHL-A10*1N

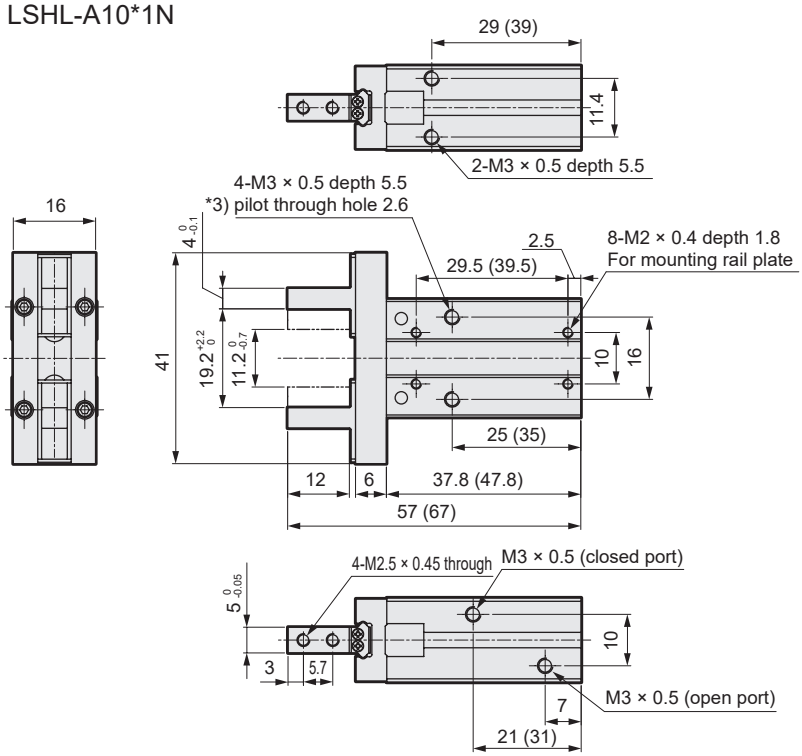

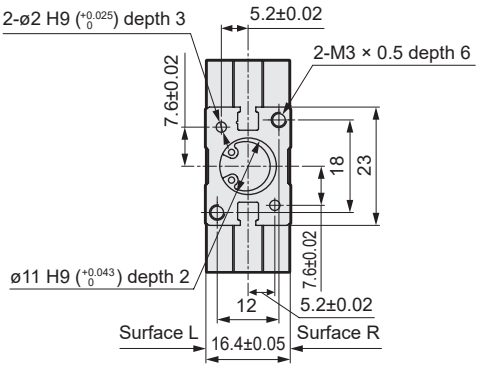

*1: Do not fix the body using a rail plate mounting tap
*2: ( ) are the dimensions during single action.
*3: For switch side/rail mounting, the through hole cannot be used.

● LSHL-A10*2N

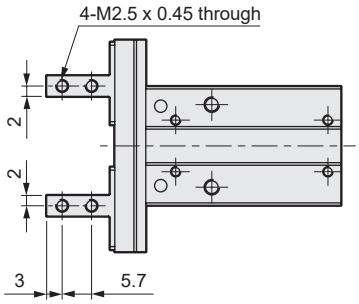

● LSHL-A10*3N

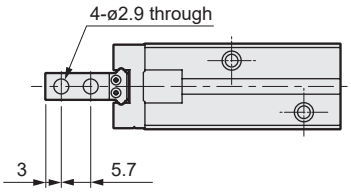

● LSHL-A10*4N

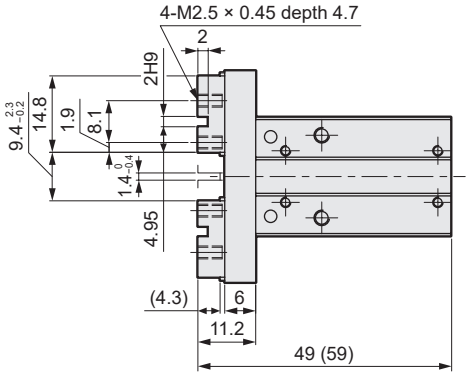

● LSHL-A10**R / L

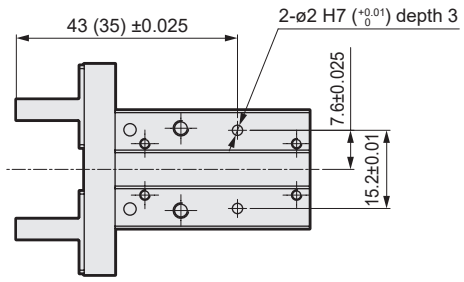

*4: Pin holes are machined on surface R for LSHL-A10D1R and L for LSHL-A10D1L. Refer to page 1567 for the base line.
*5: The dimensions in parentheses are the dimensions for LSHL-A10*4.

● With switch, rail assembly

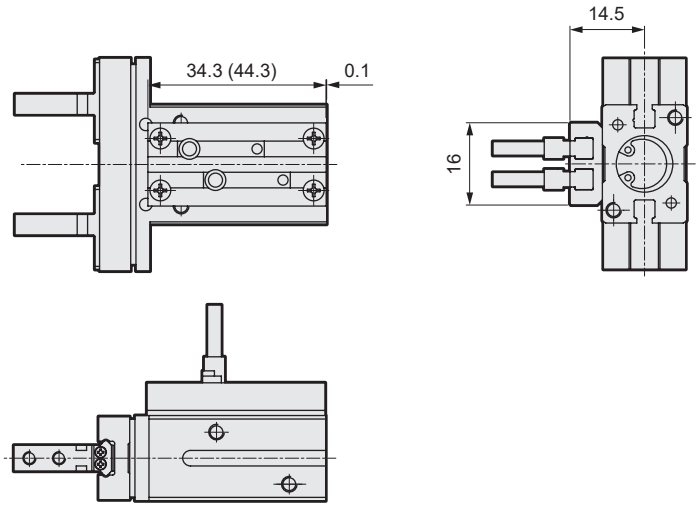

*6: ( ) are the dimensions during single action.
*7: Refer to page 1578 for cylinder switch precautions.

LCM
LCR
LCG
LCW
LCX
STM
STG
STS/STL
STR2
UCA2
ULK*
JSK/M2
JSG
JSC3/JSC4
USSD
UFCD
USC
UB
JSB3
LMB
LML
HCM
HCA
LBC
CAC4
UCAC2
CAC-N
UCAC-N
RCS2
RCC2
PCC
SHC
MCP
GLC
MFC
BBS
RRC
GRC
RV3*
NHS
HRL
LN
Hand
Chuk
MecHnd/Chuk
ShkAbs
FJ
FK
SpdContr
Ending
LSH-HP
LSH
FH100
BSA2
BHA/BHG
LHA
LHAG
HAP
HKP
HCP
HGP
HLF2
HLA/HLB
HLAG/HLBG
HLC
HLD
HMF
HMF-G
HMFB
HFP
FH500
HBL
HJL
HMD
HDL
HJD
BHE

Dimensions (bore size: ø16)

● LSHL-A16*1N

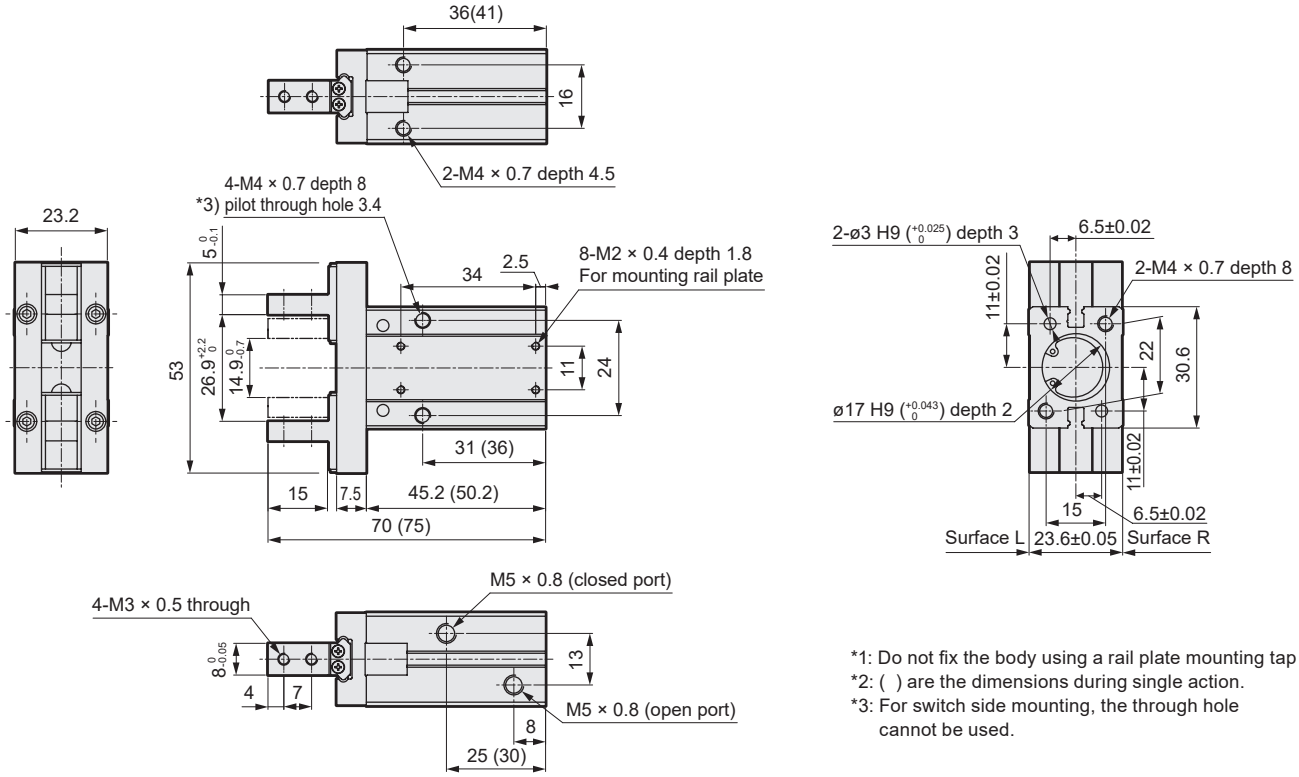

*1: Do not fix the body using a rail plate mounting tap
*2: ( ) are the dimensions during single action.
*3: For switch side mounting, the through hole cannot be used.

● LSHL-A16*2N

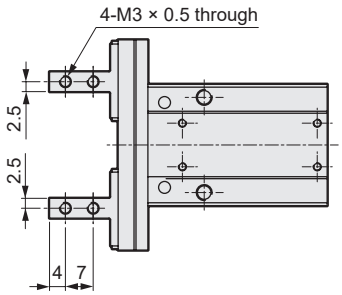

● LSHL-A16*3N

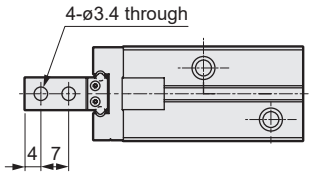

● LSHL-A16*4N

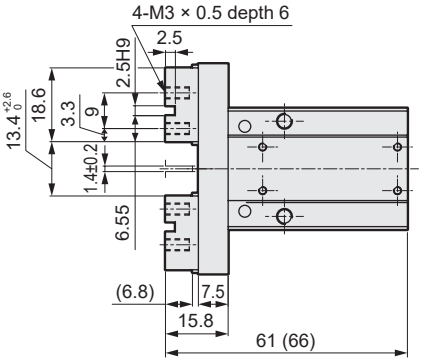

● LSHL-A16**R / L

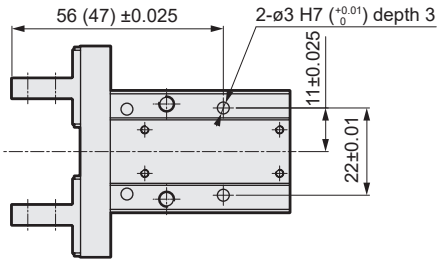

*4: Pin holes are machined on surface R for LSHL-A16D1R and L for LSHL-A16D1L. Refer to page 1567 for the base line.
*5: The dimensions in parentheses are the dimensions for LSHL-A16*4.

● With switch, rail assembly

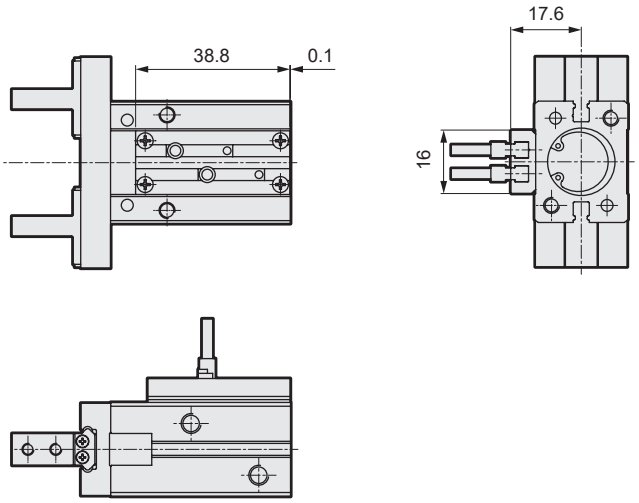

*6: Refer to page 1578 for cylinder switch precautions.

Dimensions (bore size: ø20)

● LSHL-A20*1N

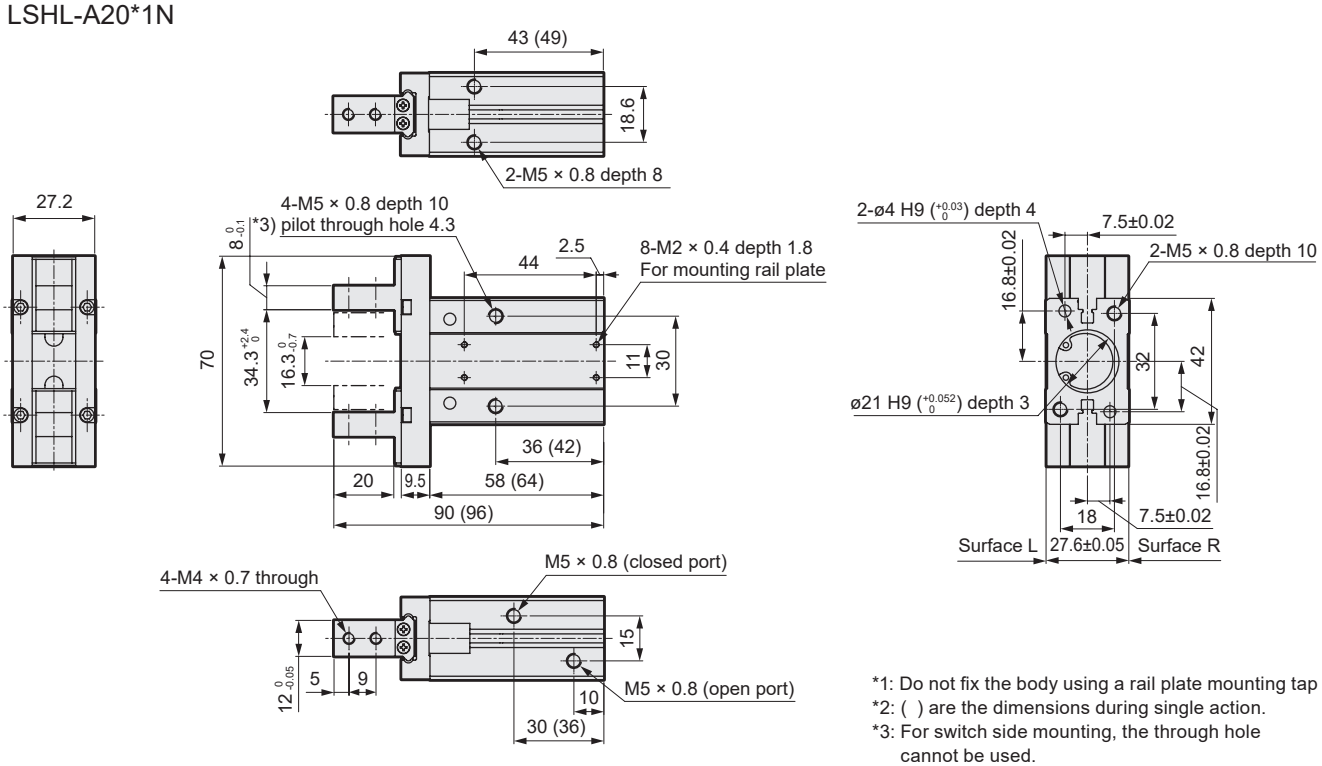

*1: Do not fix the body using a rail plate mounting tap
*2: ( ) are the dimensions during single action.
*3: For switch side mounting, the through hole cannot be used.

● LSHL-A20*2N

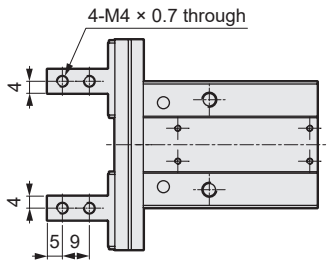

● LSHL-A20*3N

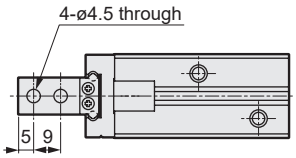

● LSHL-A20*4N

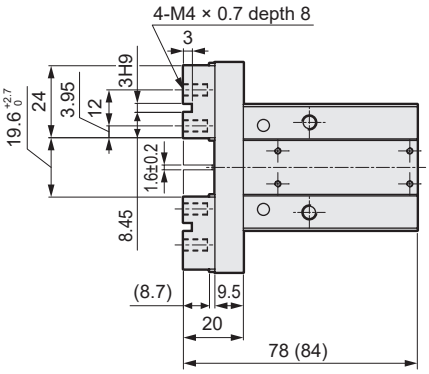

● LSHL-A20**R / L

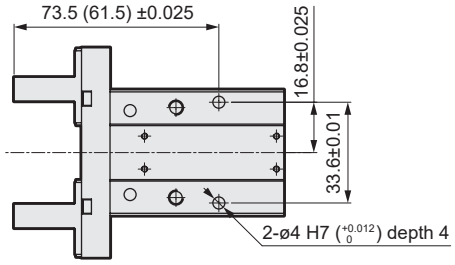

*4: Pin holes are machined on surface R for LSHL-A20D1R and L for LSHL-A20D1L. Refer to page 1567 for the base line.
*5: The dimensions in parentheses are the dimensions for LSHL-A20*4.

● With switch, rail assembly

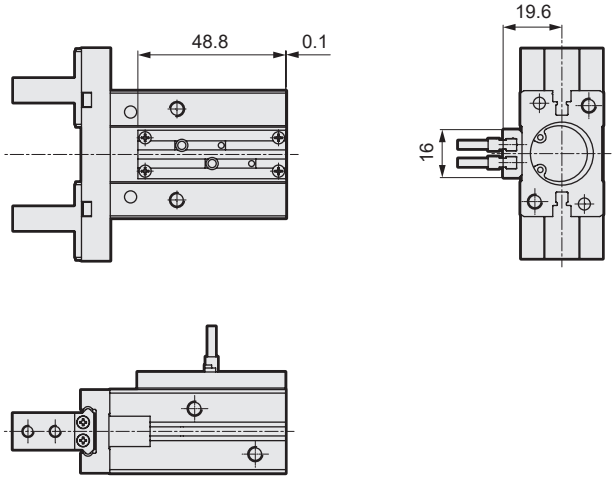

*6: Refer to page 1578 for cylinder switch precautions.

LCM
LCR
LCG
LCW
LCX
STM
STG
STS/STL
STR2
UCA2
ULK*
JSK/M2
JSG
JSC3/JSC4
USSD
UFCD
USC
UB
JSB3
LMB
LML
HCM
HCA
LBC
CAC4
UCAC2
CAC-N
UCAC-N
RCS2
RCC2
PCC
SHC
MCP
GLC
MFC
BBS
RRC
GRC
RV3*
NHS
HRL
LN
Hand
Chuk
MecHnd/Chuk
ShkAbs
FJ
FK
SpdContr
Ending
LSH-HP
LSH
FH100
BSA2
BHA/BHG
LHA
LHAG
HAP
HKP
HCP
HGP
HLF2
HLA/HLB
HLAG/HLBG
HLC
HLD
HMF
HMF-G
HMFB
HFP
FH500
HBL
HJL
HMD
HDL
HJD
BHE

Dimensions (bore size: ø25)

● LSHL-A25*1N

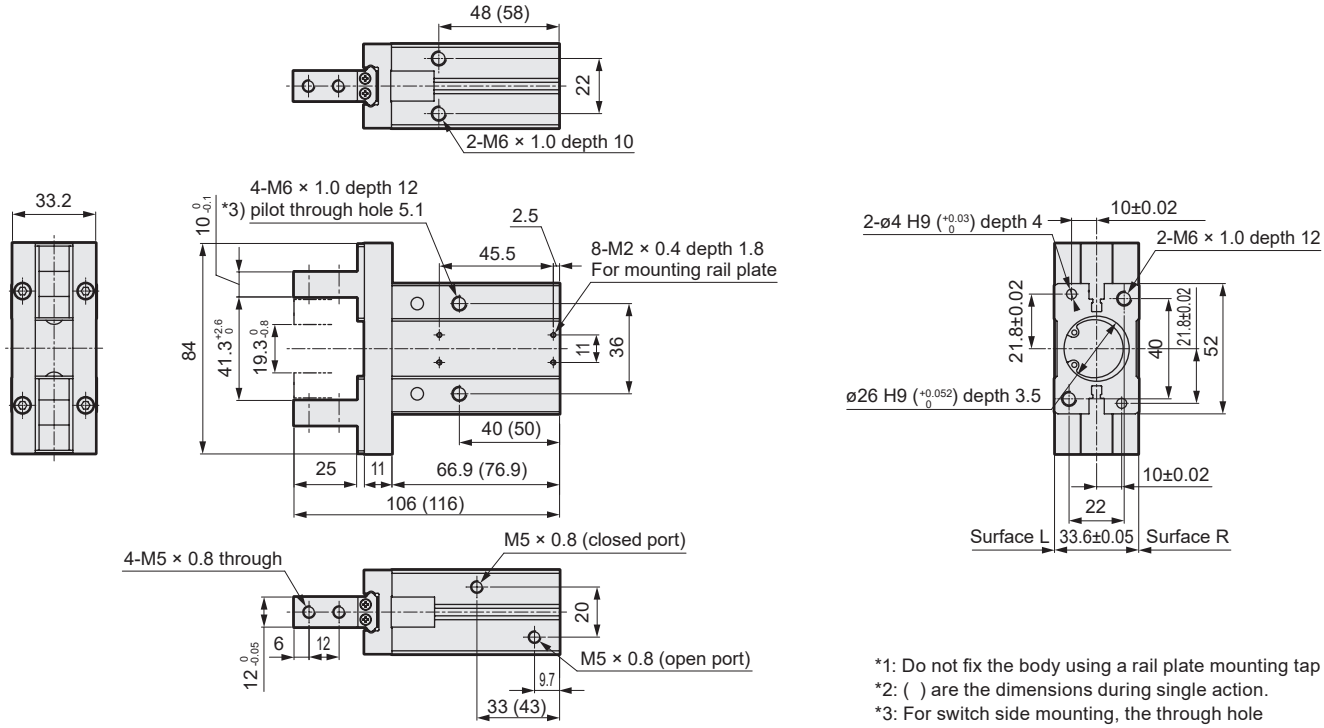

*1: Do not fix the body using a rail plate mounting tap
*2: ( ) are the dimensions during single action.
*3: For switch side mounting, the through hole cannot be used.

● LSHL-A25*2N

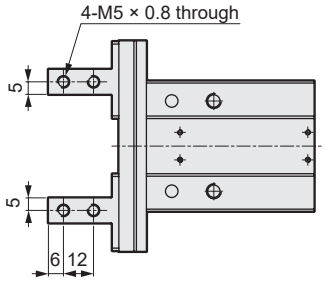

● LSHL-A25*3N

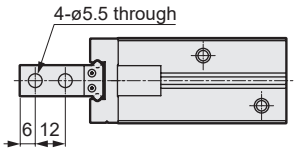

● LSHL-A25*4N

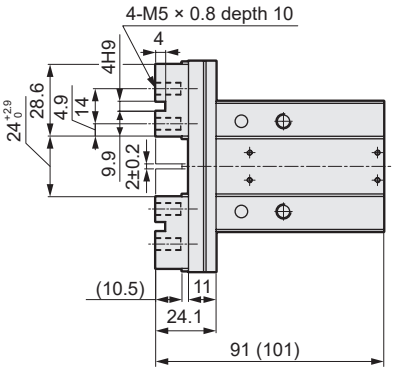

● LSHL-A25**R / L

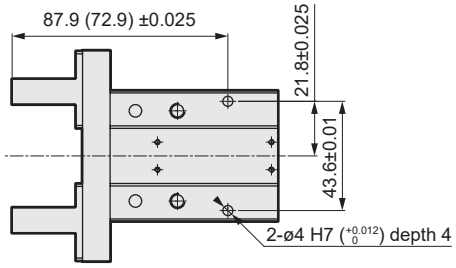

*4: Positioning holes are machined on surface R for LSHL-A25D1R and L for LSHL-A25D1L.
Refer to page 1567 for the base line.
*5: The dimensions in parentheses are the dimensions for LSHL-A25*4.

● With switch, rail assembly

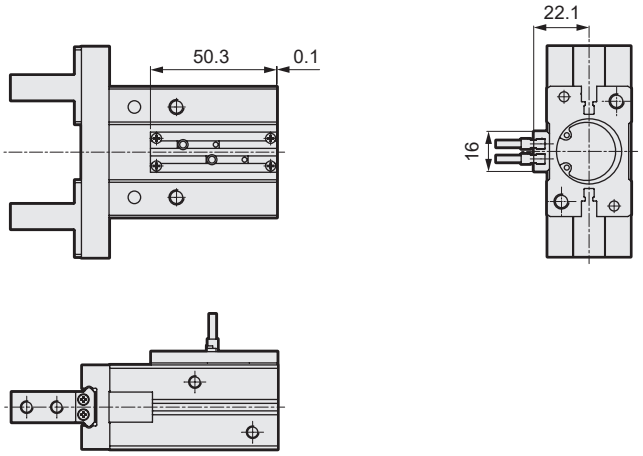

*6: Refer to page 1578 for cylinder switch precautions.

MEMO

Linear Slide Hand, long stroke double acting with rubber cover

LSHL-G / LSHL-F Series

● Operating stroke: 8, 12, 18 mm

Double acting

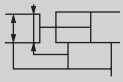

RoHS

Specifications

Item		LSHL-G, F		
Bore size	mm	ø10	ø16	ø20
Actuation		Double acting		
Working fluid		Compressed air		
Max. working pressure	MPa	0.7		
Min. working pressure	MPa	0.2	0.1	
Port size		M3	M5	
Ambient temperature	°C	-10 to 60°C (no freezing)		
Operating stroke	mm	8	12	18
Repeatability	mm	±0.01		
Weight	kg	0.09	0.18	0.39
Lubrication		Not required		

Gripping force

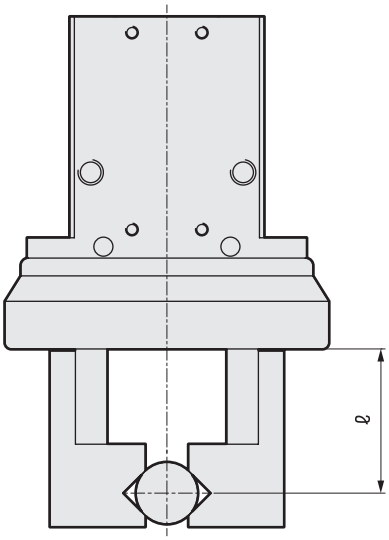

Unit: N

Bore size (mm)	Double acting	
	Open side	Closed side
ø10	17	11
ø16	45	34
ø20	66	42

* At supply pressure of 0.5 MPa, ℓ = 20 mm, stroke center

Switch specifications

Item	Proximity 2-wire	Proximity 3-wire	Proximity 2-wire	Proximity 3-wire	
	F2S	F3S	F2H / F2V	F3H/F3V	F3PH / F3PV
Applications	Dedicated for programmable controller	For programmable controller, relay	Dedicated for programmable controller	For programmable controller, relay	
Output method	-	NPN output	-	NPN output	PNP output
Power supply voltage	-	10 to 28 VDC	-	10 to 28 VDC	4.5 to 28 VDC
Load voltage / current	10 to 30 VDC 5 to 20 mA	30 VDC, 50 mA or less	10 to 30 VDC 5 to 20 mA	30 VDC, 50 mA or less	
Indicator lamp	LED (Lit when ON)		Yellow LED (Lit when ON)		
Leakage current	1 mA or less	10 μA or less	1 mA or less	10 μA or less	
Impact resistance	980 m / s^2				
Weight g	1 m:10 3 m:29				

*1: The F-switch uses a bend-resistant lead wire by default.

How to order

Without switch (built-in magnet for switch)

LSHL - G 10 D 1 R ——— HP1

With switch (built-in magnet for switch)

LSHL - G 10 D 1 R - F2H - D - HP1

Ⓐ Rubber cover
Ⓑ Bore size
Ⓒ Actuation
Ⓓ Finger
Ⓔ Grip center reference, high precision positioning hole
Ⓕ Switch model No.
Ⓖ Switch quantity

Code	Description
Ⓐ Rubber cover	
G	Chloroprene rubber
F	Fluoro rubber
Ⓑ Bore size (mm)	
10	ø10
16	ø16
20	ø20
Ⓒ Actuation	
D	Double acting
Ⓓ Finger	
1	Basic
Ⓔ Grip center reference, high precision positioning hole	
N	None
L	Refer to the figure at left.
R	
Ⓕ Switch model No.	
Blank	Without switch, rail plate attached
N	Without switch or rail plate

Straight lead wire	L-shaped lead wire	Contact	Voltage AC	Voltage DC	Indicator	Lead wire
F2S*	F2S*	Proximity		●	1-color LED	2-wire
F3S*	F3S*			●		3-wire
F2H*	F2V*			●		2-wire
F3H*	F3V*			●		3-wire
F3PH*	F3PV*			●		3-wire

*** Lead wire length**	
Blank	1 m (standard)
3	3 m (option)

Ⓖ Switch quantity	
R	1 on open side
H	1 on closed side
D	2

*1: When selecting "With switch", a rail plate is attached.
*2: Refer to page 1579 for cylinder switch precautions.

Grip center reference, high precision positioning hole position diagram

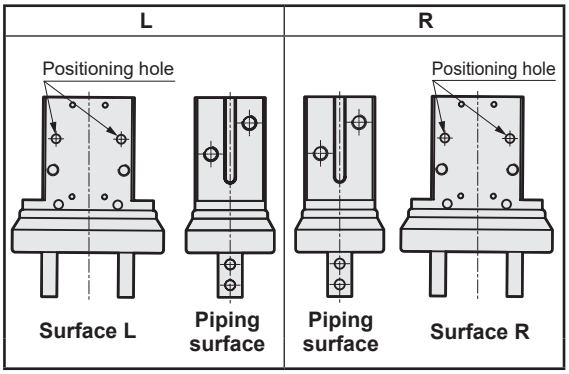

Refer to the Dimensions (pages 1543 to 1545) and page 1567 for details.

How to order switch

SW - F2H*

Switch model No.
(Item Ⓕ above)

Switch mounting availability table

Model No.	Switch model No.	Side mounting	Side mounting
LSHL-G/F10	F2/3□	●	●
	F2/3S	●	●
LSHL-G/F16	F2/3□	●	●
	F2/3S	●	●
LSHL-G/F20	F2/3□	●	●
	F2/3S	●	●

[Example of model No.]

LSHL-G10D1R-F2H-D-HP1

Model: Linear Slide Hand, long stroke

Ⓐ Rubber cover : Chloroprene rubber
Ⓑ Bore size : ø10
Ⓒ Actuation : Double acting
Ⓓ Finger : Basic
Ⓔ Grip center reference, high precision positioning hole : R
Ⓕ Switch model No. : Proximity F2H, lead wire 1 m
Ⓖ Switch quantity : 2

Internal structure diagram and parts list

●LSHL-G10 to G20 / LSHL-F10 to F20

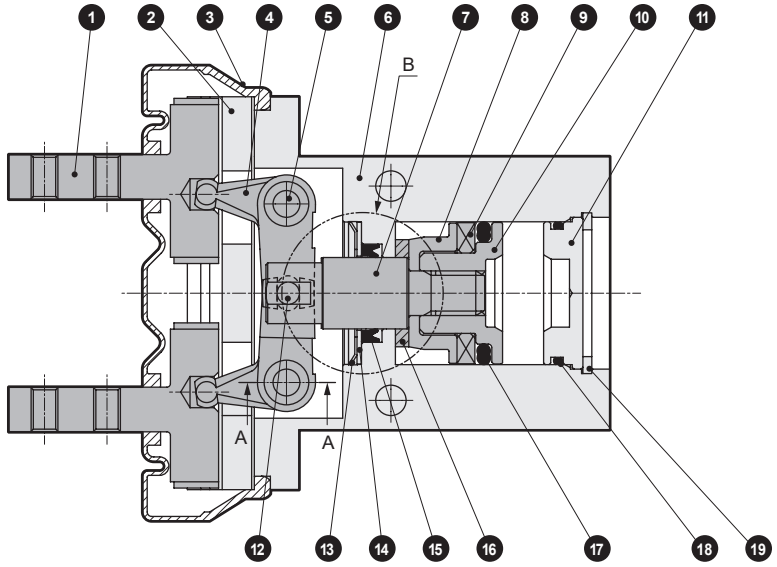

Cross-section A-A

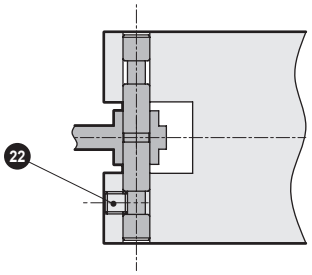

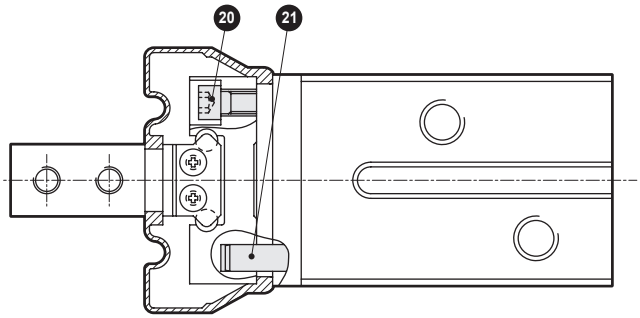

B part ø20

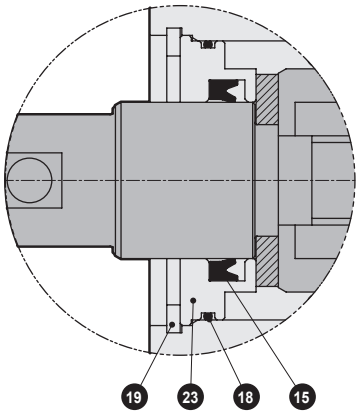

Parts list

Part No.	Part name	Material	Remarks	Part No.	Part name	Material	Remarks
1	Finger	Stainless steel		13	CR ring	Stainless steel	
2	Linear guide	Stainless steel		14	Cap	Stainless steel	
3	Rubber cover	LSHL-G : Chloroprene LSHL-F : Fluorine		15	Rod packing	Nitrile rubber	
4	Lever	Stainless steel		16	Cushion rubber	Urethane rubber	
5	Fulcrum axis	Steel		17	Piston packing	Nitrile rubber	
6	Body	Aluminum alloy		18	O-ring	Nitrile rubber	
7	Piston rod	Stainless steel		19	C-snap ring	Stainless steel	
8	Spring bracket	Aluminum alloy		20	Hexagon socket head cap screw	Stainless steel	
9	Magnet			21	Pin	Steel	
10	Piston	Aluminum alloy		22	Hexagon socket set screw	Stainless steel	
11	Head cover	Aluminum alloy		23	Rod metal	Aluminum alloy	
12	Operation shaft	Steel alloy					

Consumable parts list

Bore size (mm)	Kit No.	Consumable parts No.	Rubber cover (part No. 3)		Rail plate Kit No.	Item
			LSHL-G Chloroprene	LSHL-F Fluorine		
ø10	LSHL-10K-HP	13 15 17 18	LSHL-G10K	LSHL-F10K	LSHL-RPF-10-HP	Rail plate Small machine screw
ø16	LSHL-16K-HP		LSHL-G16K	LSHL-F16K	LSHL-RPF-16-HP	
ø20	LSHL-20K-HP	15 17 18	LSHL-G20K	LSHL-F20K	LSHL-RPF-20-HP	

Dimensions (bore size: ø10)

● LSHL-G10D1N, LSHL-F10D1N

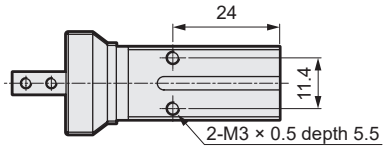

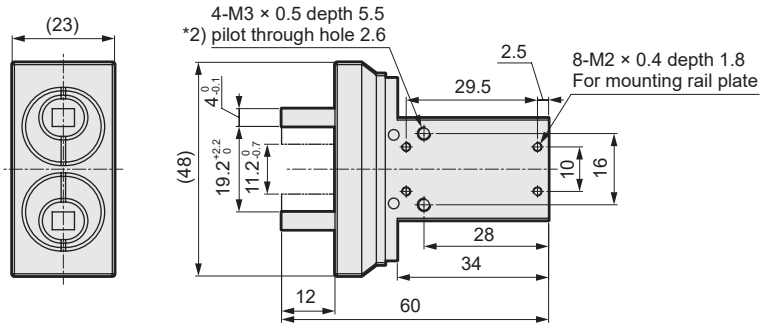

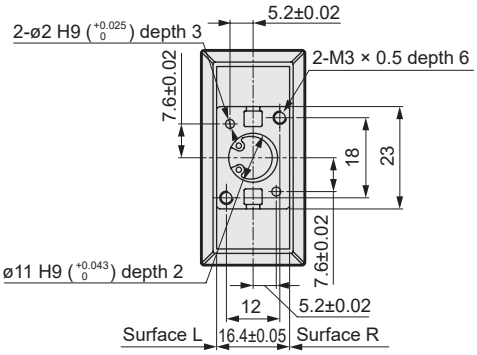

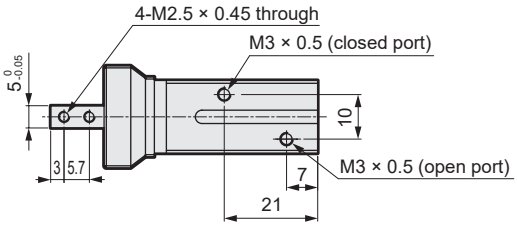

*1: Do not fix the body using a rail plate mounting tap
*2: For switch side/rail mounting, the through hole cannot be used.

● LSHL-G10D1R / L,LSHL-F10D1R / L

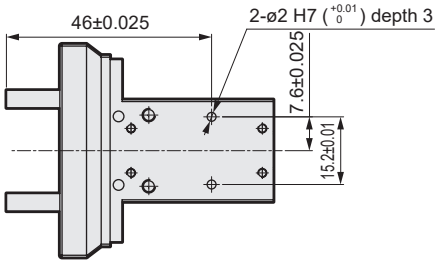

*3: Pin holes are machined on surface R for LSHL-G10D1R and L for LSHL-G10D1L. Refer to page 1567 for the base line.

● With switch, rail assembly

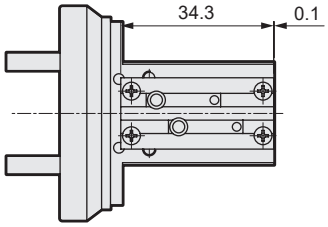

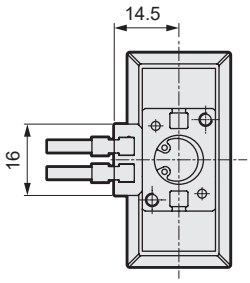

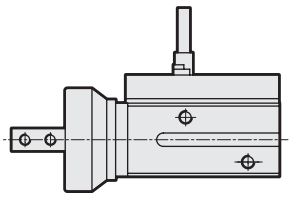

*4: Refer to page 1579 for cylinder switch precautions.

LCM
LCR
LCG
LCW
LCX
STM
STG
STS/STL
STR2
UCA2
ULK*
JSK/M2
JSG
JSC3/JSC4
USSD
UFCD
USC
UB
JSB3
LMB
LML
HCM
HCA
LBC
CAC4
UCAC2
CAC-N
UCAC-N
RCS2
RCC2
PCC
SHC
MCP
GLC
MFC
BBS
RRC
GRC
RV3*
NHS
HRL
LN
Hand
Chuk
MecHnd/Chuk
ShkAbs
FJ
FK
SpdContr
Ending
LSH-HP
LSH
FH100
BSA2
BHA/BHG
LHA
LHAG
HAP
HKP
HCP
HGP
HLF2
HLA/HLB
HLAG/HLBG
HLC
HLD
HMF
HMF-G
HMFB
HFP
FH500
HBL
HJL
HMD
HDL
HJD
BHE

Dimensions (bore size: ø16)

● LSHL-G16D1N, LSHL-F16D1N

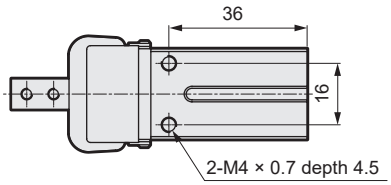

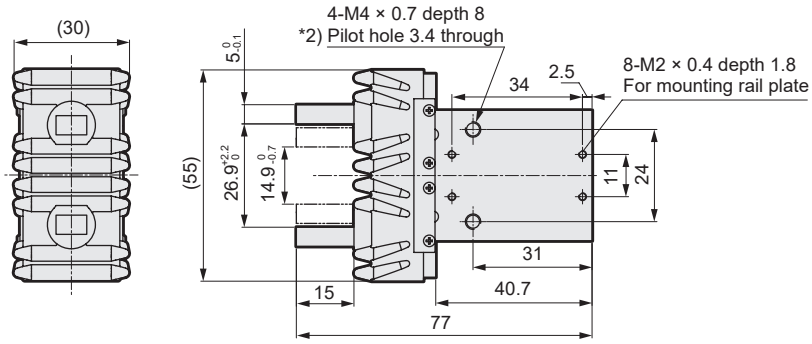

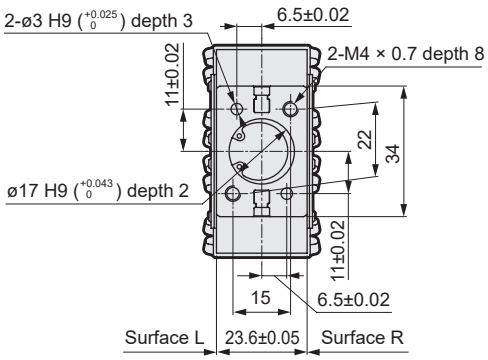

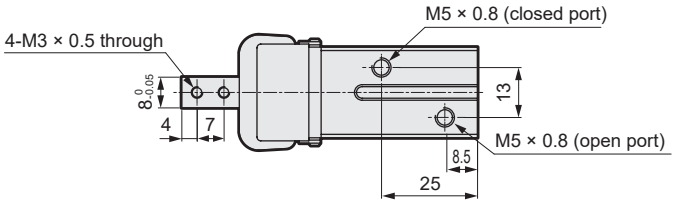

*1: Do not fix the body using a rail plate mounting tap
*2: For switch side mounting, the through hole cannot be used.

● LSHL-G16D1R / L, LSHL-F16D1R / L

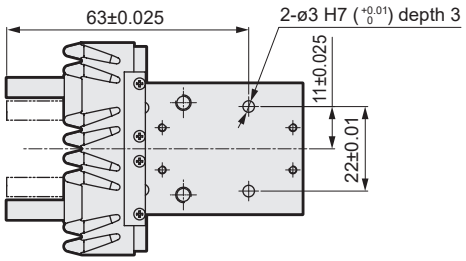

*3: Pin holes are machined on surface R for LSHL-G16D1R and L for LSHL-G16D1L. Refer to page 1567 for the base line.

● With switch, rail assembly

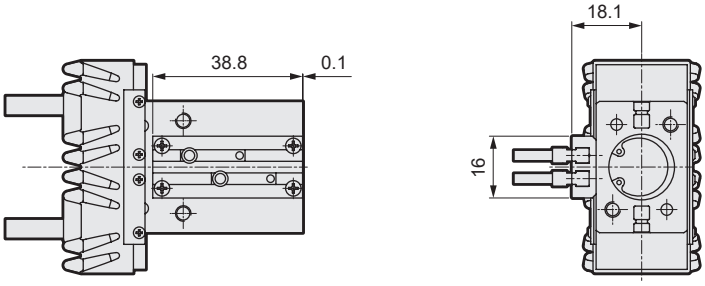

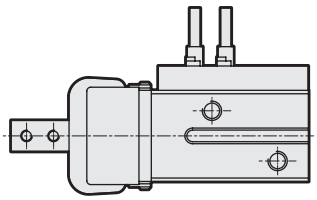

*4: Refer to page 1579 for cylinder switch precautions.

Dimensions (bore size: ø20)

● LSHL-G20D1N, LSHL-F20D1N

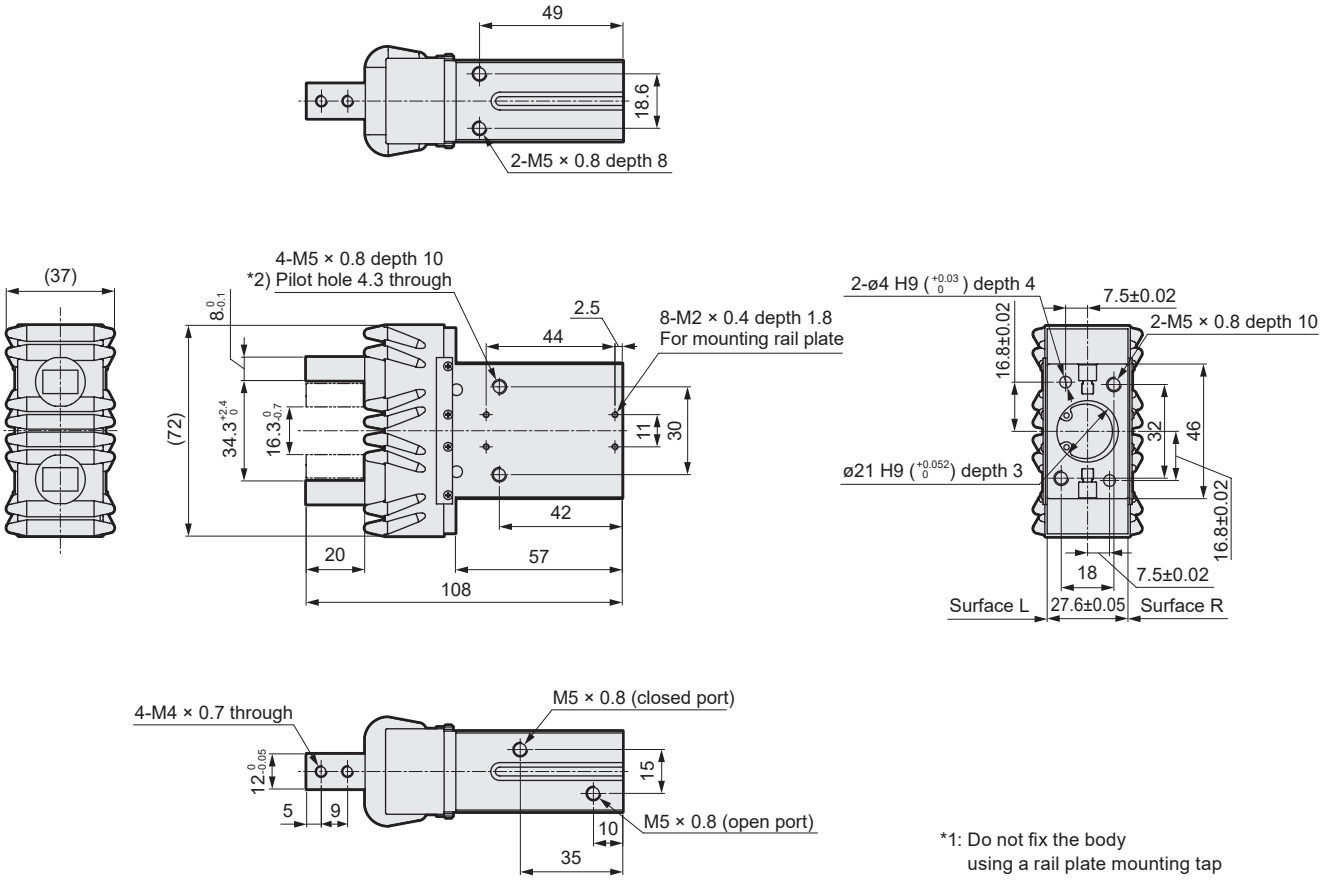

*1: Do not fix the body using a rail plate mounting tap
*2: For switch side mounting, the through hole cannot be used.

● LSHL-G20D1R / L, LSHL-F20D1R/L

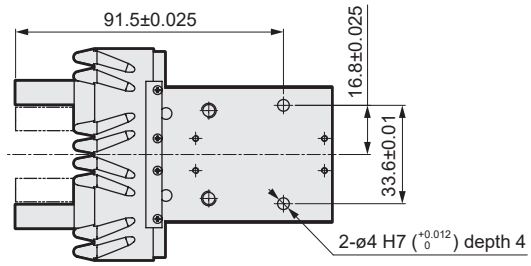

*3: Pin holes are machined on surface R for LSHL-G20D1R and L for LSHL-G20D1L. Refer to page 1567 for the base line.

● With switch, rail assembly

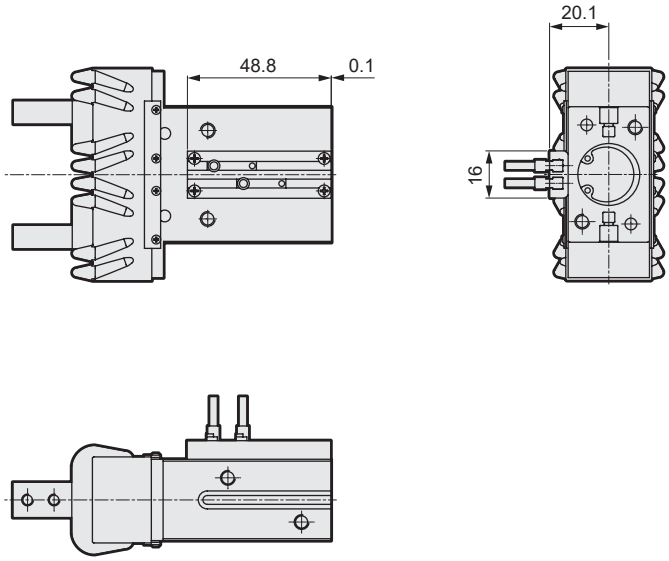

*4: Refer to page 1579 for cylinder switch precautions.

Linear Slide Hand with length measuring function, double acting

LSHM-A Series

● Operating stroke: 4, 6, 10, 14 mm

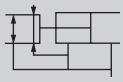

RoHS

Specifications

Item		LSHM-A							
Bore size mm		ø10		ø16		ø20		ø25	
Actuation		Double acting							
Working fluid		Compressed air							
Max. working pressure MPa		0.7							
Min. working pressure MPa		0.2		0.1		0.1		0.1	
Port size		M3		M5		M5		M5	
Operating stroke mm		4		6		10		14	
Power supply voltage		24 VDC ±10%							
Current consumption		25 mA or less							
Indicator lamp		Green LED ON when power applied							
Analog output		When fingers are closed: 1 V; when opened: 5 V *1, connection load: 100 kΩ or more							
Analog output linearity	Without correction adapter	±3% F.S. or less (ambient temperature 25°C)							
	With correction adapter	±0.5% F.S. or less (ambient temperature 25°C)							
Repeatability of analog output		±0.02 mm or less (ambient temperature 25°C, no deformation or wear of actuator / jig)							
Valid measured range length mm		4.5		6.5		10		14	
Impact resistance (sensor / amplifier section)		294 m / s^2							
Vibration resistance (sensor / amplifier section)		10 to 55 Hz compound amplitude 1.5 mm, 2 hours per X, Y, Z direction							
Degree of protection (sensor / amplifier section)		IEC standards IP65							
Ambient temperature, humidity		10 to 60°C, 85% RH or less (no freezing)							
Amplifier mounting position		Side	Front	Side	Front	Side	Front	Side	Front
Weight kg	Finger OP: 1, 2, 3	0.108	0.120	0.221	0.238	0.437	0.457	0.752	0.773
	Finger OP: 4			0.226	0.243	0.442	0.462	0.782	0.803
Lubrication		Not required							

Note: Refer to page 1562 for the correction adapter.
*1: There is output fluctuation of 1 mV / °C.

Gripping force

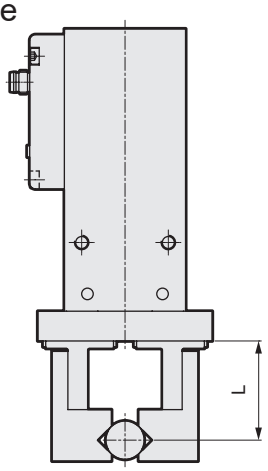

Unit: N

Bore size (mm)	Double acting	
	Open side	Closed side
ø10	17	11
ø16	45	34
ø20	66	42
ø25	104	65

*Supply pressure: 0.5 MPa, L = 20 mm, value at stroke center

Analog output characteristics

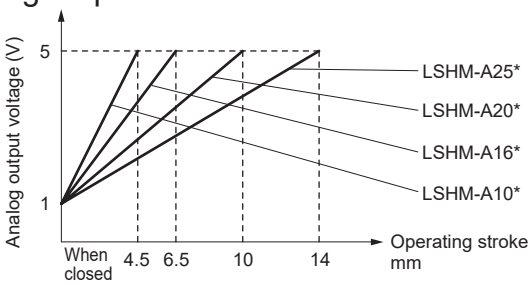

*The analog output voltage at shipment is 1 V on the closed side and 5 V on the open side, with the port closed and pressurized.

LVDT displacement sensor operation principle

When exciting the primary coil (P), induced voltage is generated in the two secondary coils (S1 / S2) by electromagnetic induction. When the Hand is driven, the core position changes and a difference in induced voltage occurs between S1 and S2. This difference is used to output the position of the core as electric signals.

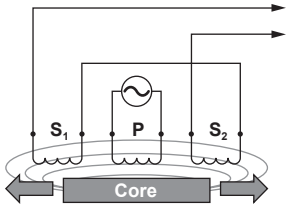

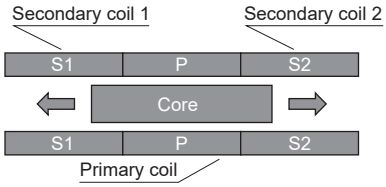

How to order

LSHM - A 10 D 2 A - N - HP2

- Ⓐ Rubber cover
- Ⓑ Bore size
- Ⓒ Actuation
- Ⓓ Finger
- Ⓔ Amp mounting position / grip center reference, high precision positioning hole
- Ⓕ Correction adapter option

Code	Description
Ⓐ Rubber cover	
A	Without rubber cover
Ⓑ Bore size (mm)	
10	ø10
16	ø16
20	ø20
25	ø25
Ⓒ Actuation	
D	Double acting
Ⓓ Finger * Refer to the Dimensions for details.	
1	Basic
2	Side tap
3	Through hole
4	Flat
Ⓔ Amp mounting position / grip center reference, high precision positioning hole *1	
A	Amp side / no positioning hole
B	Amp side / rear with finger below and piping right
C	Amp side / rear with finger below and piping left
D	Amp front / no positioning hole
E	Amp front / rear with finger below and piping right
Ⓕ Correction adapter option	
N	Without correction adapter
A	Correction adapter attached

*1

Amp mounting position / grip center reference, high precision positioning hole position diagram

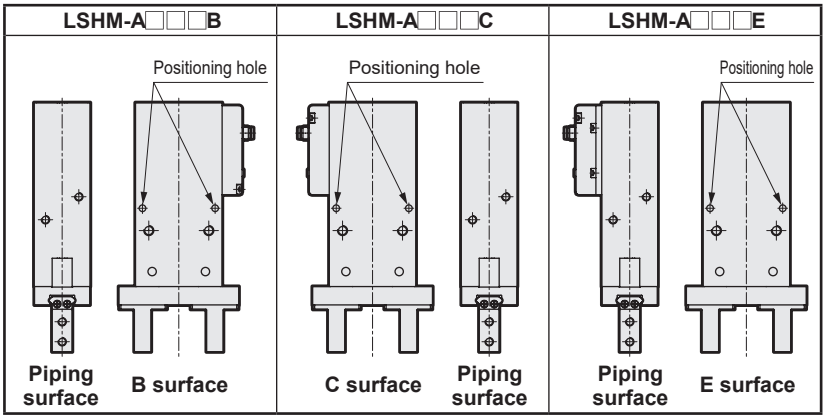

Refer to the Dimensions (pages 1550 to 1553) and page 1567 for details.

Plug contact array diagram

·Without correction adapter

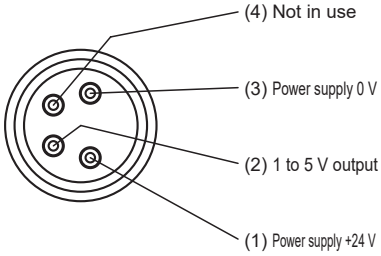

·Correction adapter attached

M8 socket (IN side) pin array

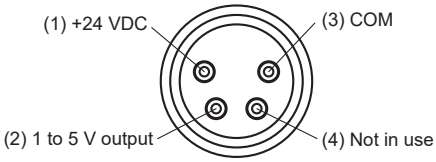

M8 plug (OUT side) pin array

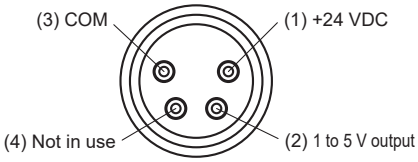

[Example of model No.]

LSHM-A10D2A-N-HP2

Model: Linear Slide Hand

Ⓐ Rubber cover	: Without rubber cover
Ⓑ Bore size	: ø10
Ⓒ Actuation	: Double acting
Ⓓ Finger	: Side tap
Ⓔ Amp mounting position / grip center reference, high precision positioning hole	: Amp side / no positioning hole
Ⓕ Correction adapter option	: Without correction adapter

Internal structure and parts list

● Amplifier side mounting
ø10

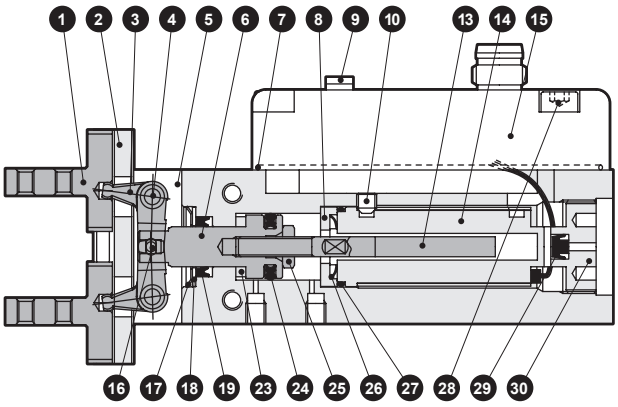

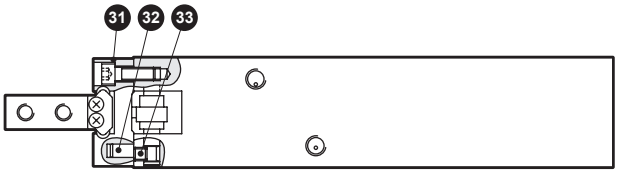

● Amplifier side mounting
ø16 to 25

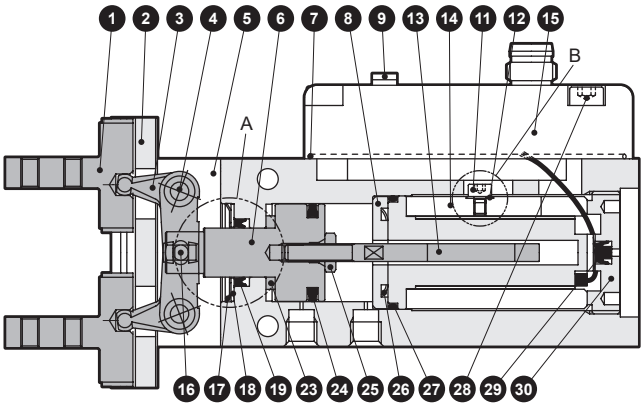

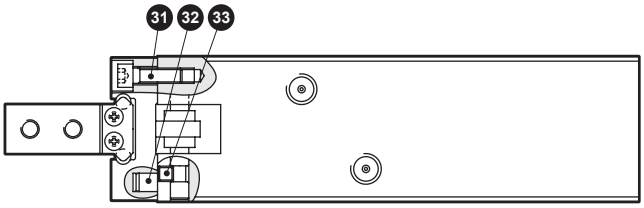

A part ø20, 25

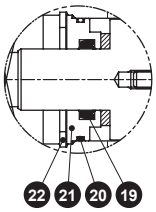

B part ø20, 25

Cannot be disassembled

Parts list

No.	Part name	Material	Remarks	No.	Part name	Material	Remarks
1	Finger	Stainless steel		18	Cap	Stainless steel	
2	Linear guide	Stainless steel		19	Rod packing	Nitrile rubber	
3	Lever	Stainless steel		20	O-ring	Nitrile rubber	
4	Fulcrum axis	Steel		21	Rod metal	Aluminum alloy	
5	Body	Aluminum alloy		22	C-snap ring	Steel	
6	Piston rod	Stainless steel		23	Cushion rubber	Urethane rubber	
7	Gasket	Nitrile rubber		24	Piston packing	Nitrile rubber	
8	Washer retainer	Aluminum alloy		25	Nut	Stainless steel	
9	Plug	Nitrile rubber		26	Wave washer	Stainless steel	
10	Hexagon socket set screw	Stainless steel	ø10	27	O-ring	Nitrile rubber	
11	Hexagon socket head cap screw	Stainless steel	ø16 to 25	28	Hexagon socket head cap screw	Stainless steel	
12	Flat washer	Stainless steel	ø16	29	Check valve	Nitrile rubber	
13	Core shaft	Steel		30	Head cover	Aluminum alloy	
14	Sensor body	-		31	Hexagon socket head cap screw	Stainless steel	
15	Amplifier	-		32	Pin	Steel	
16	Fulcrum axis	Steel		33	Hexagon socket set screw	Stainless steel	
17	CR ring	Stainless steel					

Internal structure and parts list

● Amplifier front mounting
ø10

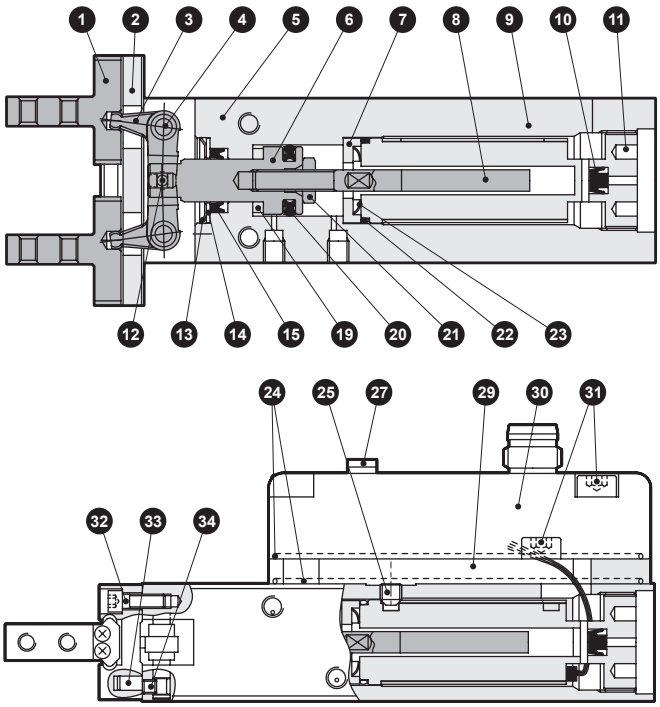

● Amplifier front mounting
ø16 to 25

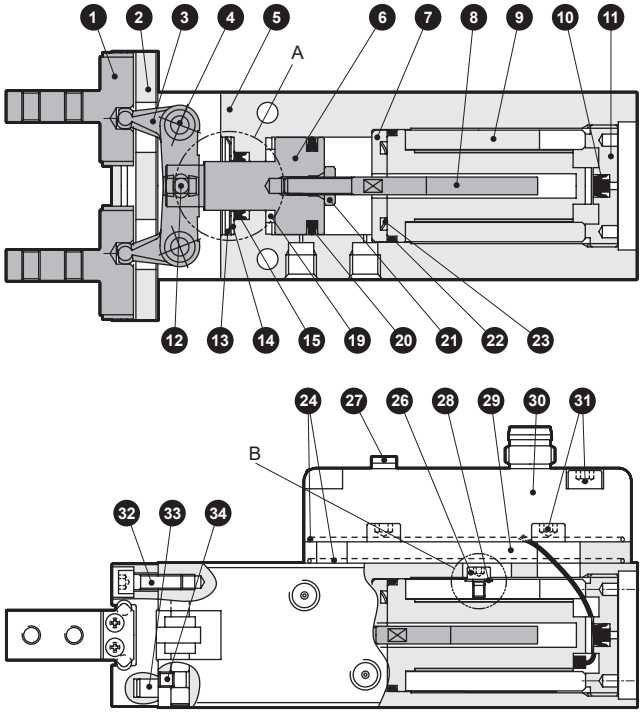

A part ø20, 25

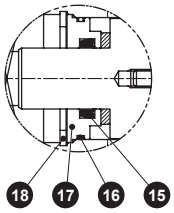

B part ø20, 25

Cannot be disassembled

Parts list

No.	Part name	Material	Remarks	No.	Part name	Material	Remarks
1	Finger	Stainless steel		18	C-snap ring	Steel	
2	Linear guide	Stainless steel		19	Cushion rubber	Urethane rubber	
3	Lever	Stainless steel		20	Piston packing	Nitrile rubber	
4	Fulcrum axis	Steel		21	Nut	Stainless steel	
5	Body	Aluminum alloy		22	O-ring	Nitrile rubber	
6	Piston rod	Stainless steel		23	Wave washer	Stainless steel	
7	Washer retainer	Aluminum alloy		24	Gasket	Nitrile rubber	
8	Core shaft	Steel		25	Hexagon socket set screw	Stainless steel	ø10
9	Sensor body	-		26	Hexagon socket head cap screw	Stainless steel	ø16 to 25
10	Check valve	Nitrile rubber		27	Plug	Nitrile rubber	
11	Head cover	Aluminum alloy		28	Flat washer	Stainless steel	ø16
12	Fulcrum axis	Steel		29	Amplifier adapter	Aluminum alloy	
13	CR ring	Stainless steel		30	Amplifier	-	
14	Cap	Stainless steel		31	Hexagon socket head cap screw	Stainless steel	
15	Rod packing	Nitrile rubber		32	Hexagon socket head cap screw	Stainless steel	
16	O-ring	Nitrile rubber		33	Pin	Steel	
17	Rod metal	Aluminum alloy		34	Hexagon socket set screw	Stainless steel	

LCM
LCR
LCG
LCW
LCX
STM
STG
STS/STL
STR2
UCA2
ULK*
JSK/M2
JSG
JSC3/JSC4
USSD
UFCD
USC
UB
JSB3
LMB
LML
HCM
HCA
LBC
CAC4
UCAC2
CAC-N
UCAC-N
RCS2
RCC2
PCC
SHC
MCP
GLC
MFC
BBS
RRC
GRC
RV3*
NHS
HRL
LN
Hand
Chuk
MecHnd/Chuk
ShkAbs
FJ
FK
SpdContr
Ending
LSH-HP
LSH
FH100
BSA2
BHA/BHG
LHA
LHAG
HAP
HKP
HCP
HGP
HLF2
HLA/HLB
HLAG/HLBG
HLC
HLD
HMF
HMF-G
HMFB
HFP
FH500
HBL
HJL
HMD
HDL
HJD
BHE

Dimensions (bore size: ø10)

● LSHM-A10D1A

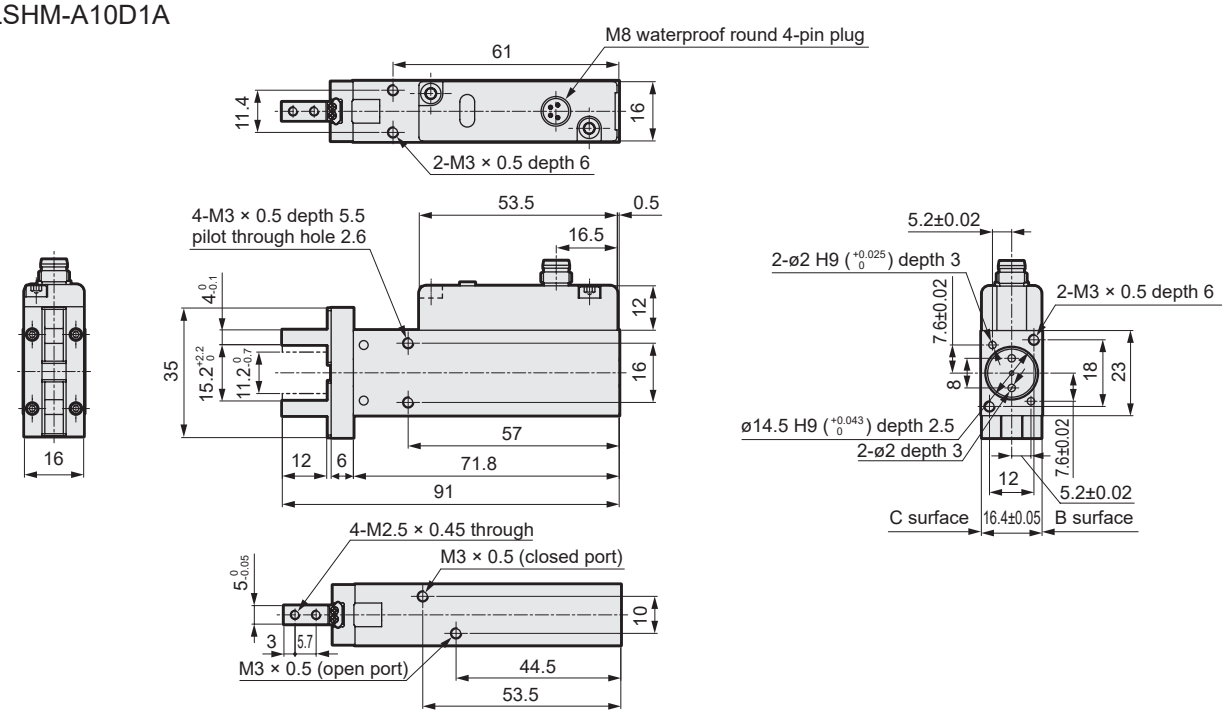

● LSHM-A10D2*

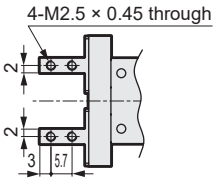

● LSHM-A10D3*

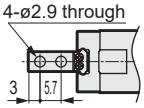

● LSHM-A10D4*

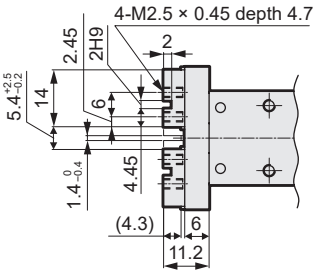

● LSHM-A10D*B/C

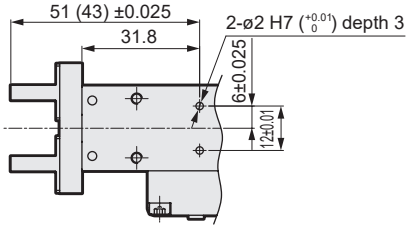

*1: Positioning holes are machined on B surface for LSHM-A10D*B and C surface for LSHM-A10D*C
*2: The dimensions in parentheses are the dimensions for LSHM-A10D4.

● LSHM-A10D1D

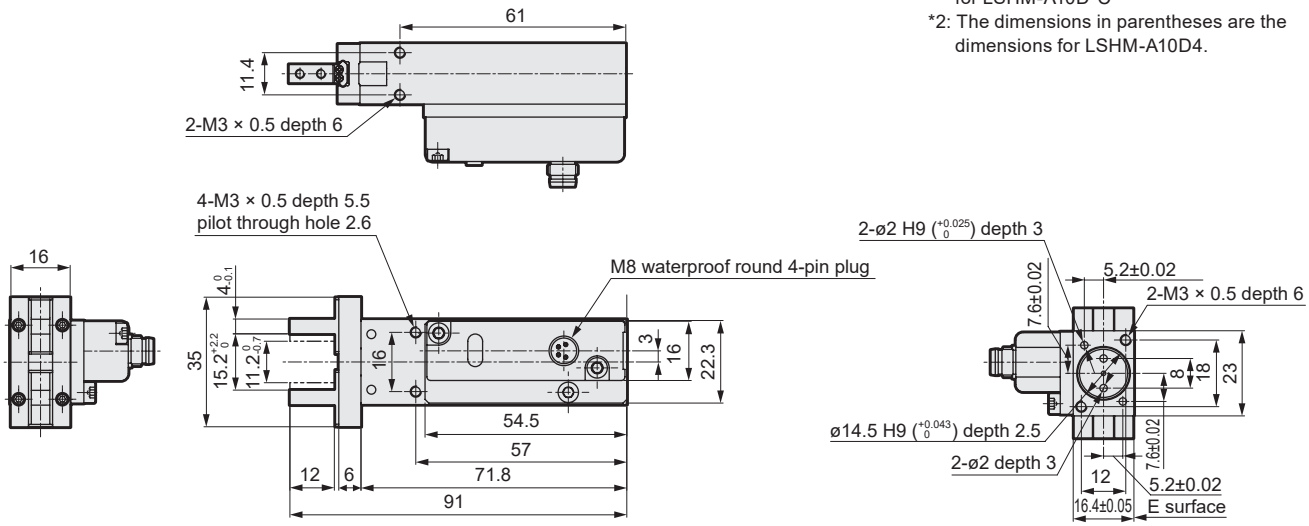

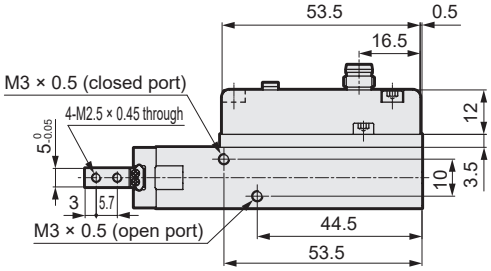

● LSHM-A10D*E

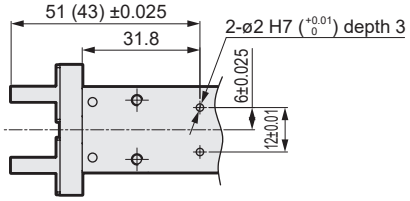

Dimensions (bore size: ø16)

● LSHM-A16D1A

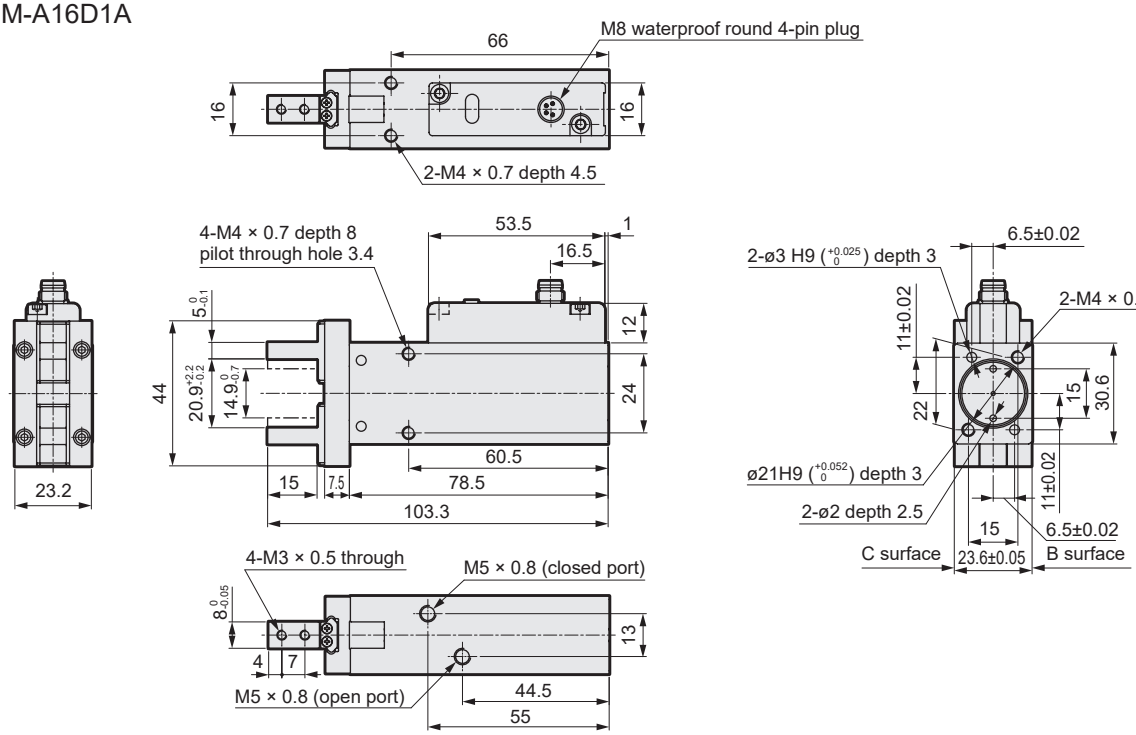

● LSHM-A16D2*

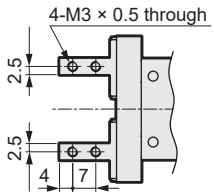

● LSHM-A16D3*

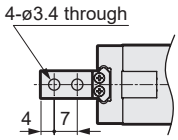

● LSHM-A16D4*

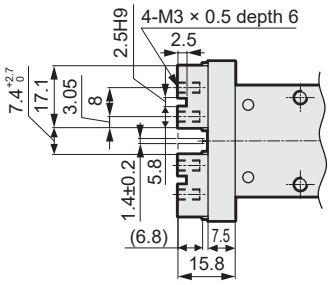

● LSHM-A16D*B / C

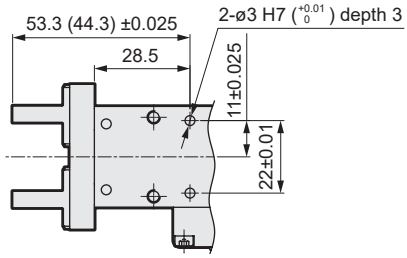

*1: Positioning holes are machined on B surface for LSHM-A16D*B and C surface for LSHM-A16D*C
*2: The dimensions in parentheses are the dimensions for LSHM-A16D4.

● LSHM-A16D1D

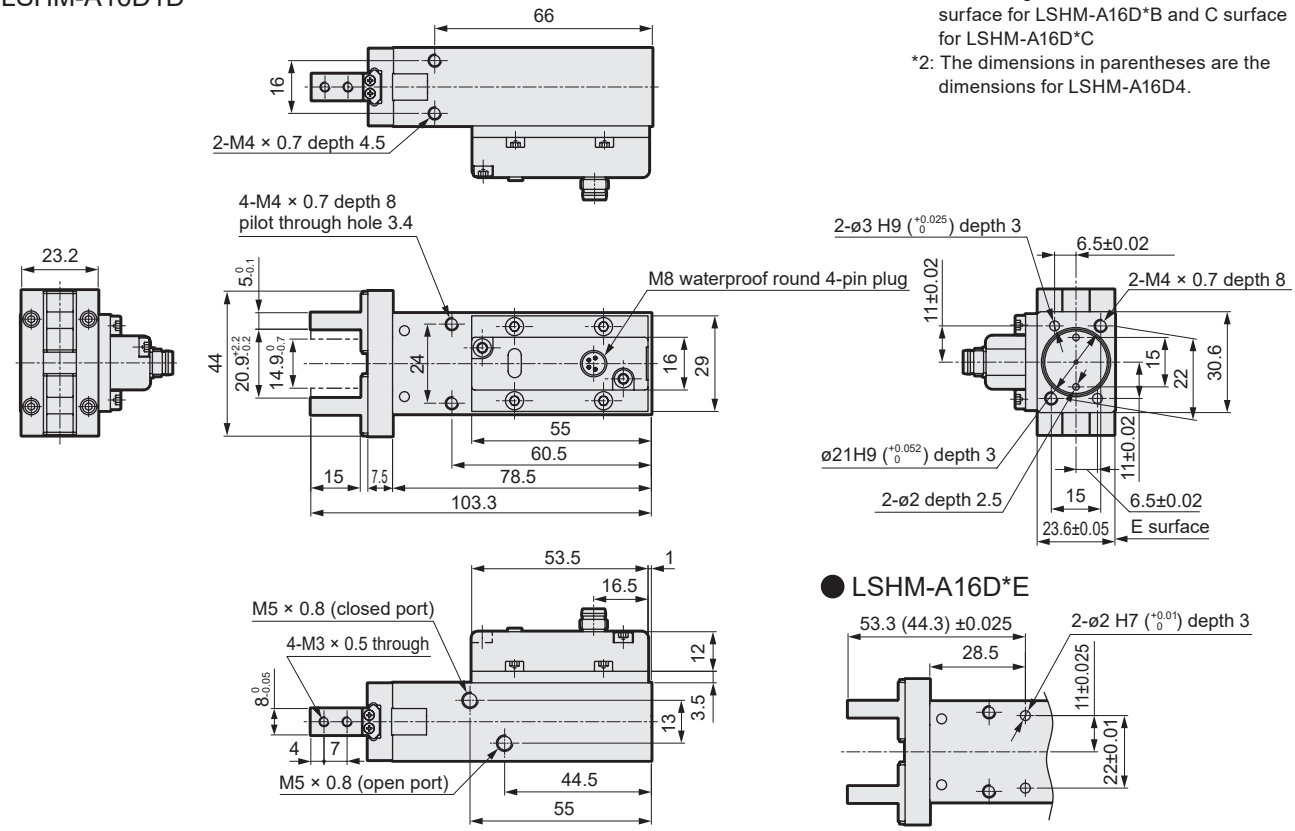

● LSHM-A16D*E

LCM
LCR
LCG
LCW
LCX
STM
STG
STS/STL
STR2
UCA2
ULK*
JSK/M2
JSG
JSC3/JSC4
USSD
UFCD
USC
UB
JSB3
LMB
LML
HCM
HCA
LBC
CAC4
UCAC2
CAC-N
UCAC-N
RCS2
RCC2
PCC
SHC
MCP
GLC
MFC
BBS
RRC
GRC
RV3*
NHS
HRL
LN
Hand
Chuk
MecHnd/Chuk
ShkAbs
FJ
FK
SpdContr
Ending
LSH-HP
LSH
FH100
BSA2
BHA/BHG
LHA
LHAG
HAP
HKP
HCP
HGP
HLF2
HLA/HLB
HLAG/HLBG
HLC
HLD
HMF
HMF-G
HMFB
HFP
FH500
HBL
HJL
HMD
HDL
HJD
BHE

Dimensions (bore size: ø20)

● LSHM-A20D1A

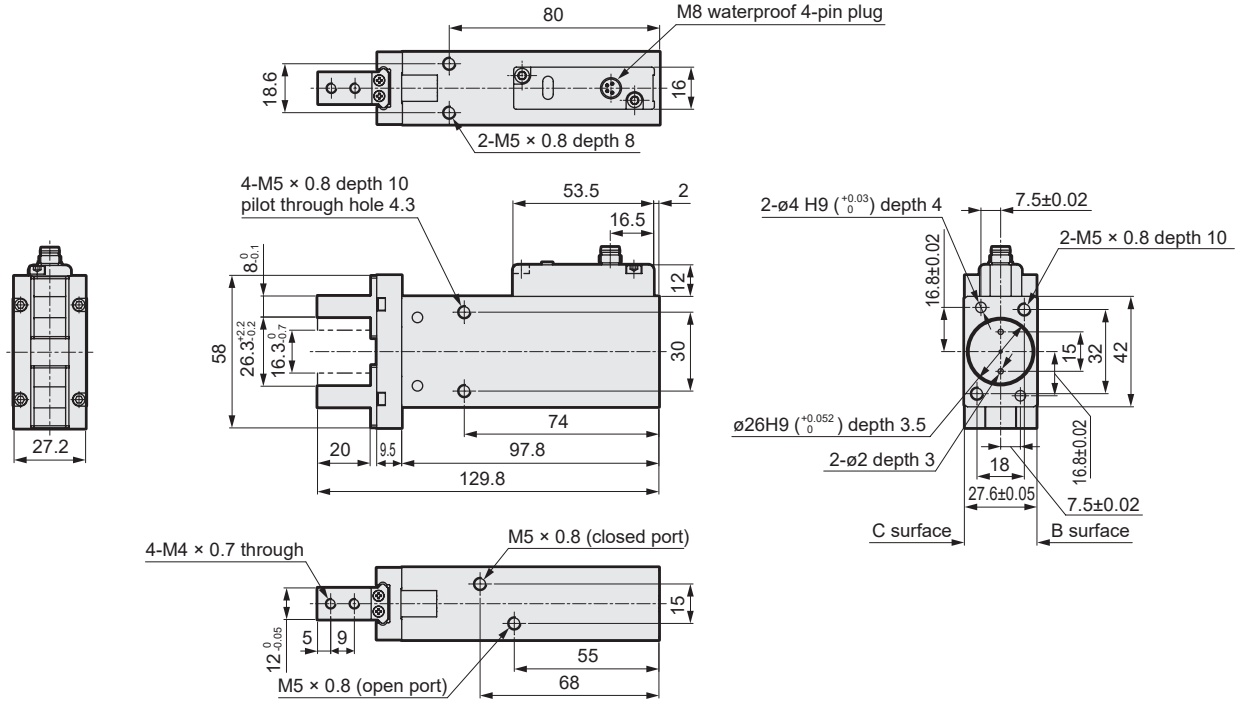

● LSHM-A20D2*

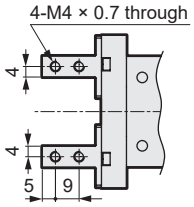

● LSHM-A20D3*

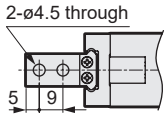

● LSHM-A20D4*

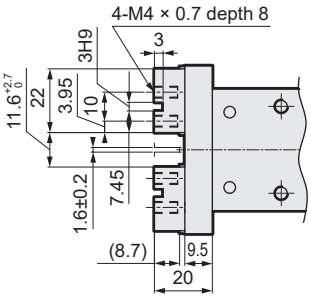

● LSHM-A20D*B / C

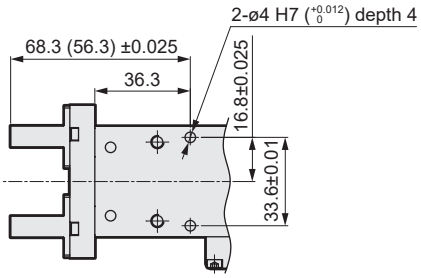

*1: Positioning holes are machined on B surface for LSHM-A20D*B and C surface for LSHM-A20D*C
*2: The dimensions in parentheses are the dimensions for LSHM-A20D4.

● LSHM-A20D1D

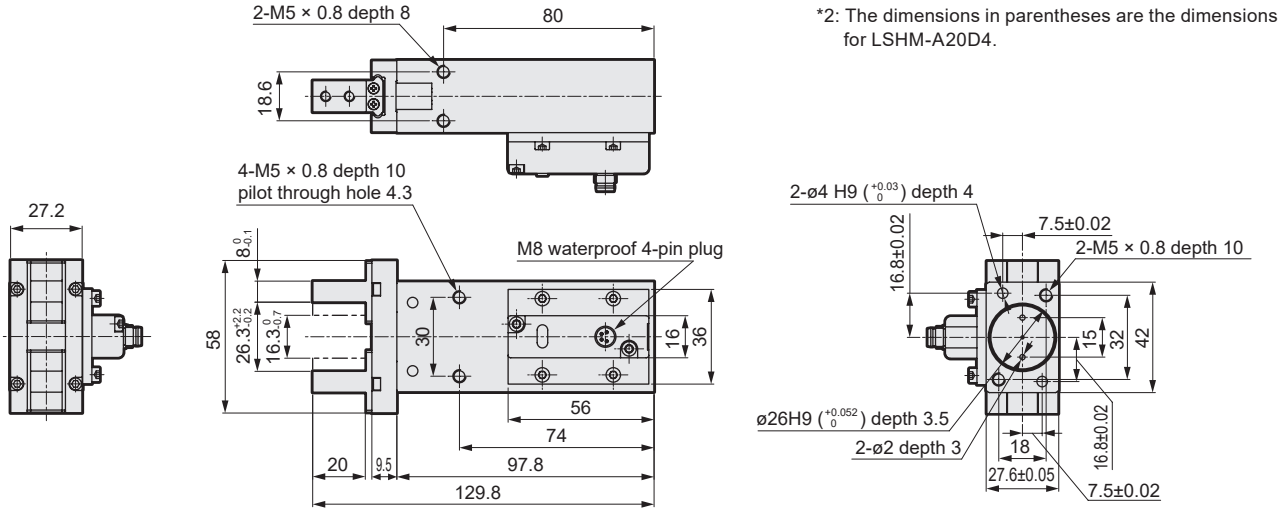

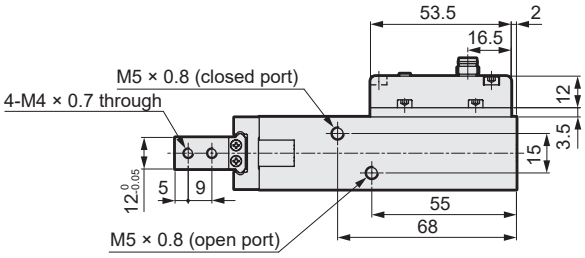

● LSHM-A20D*E

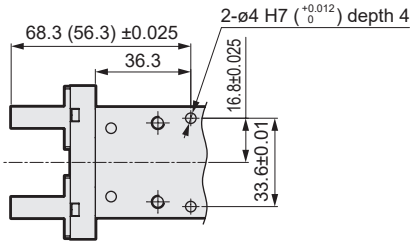

Dimensions (bore size: ø25)

●LSHM-A25D1A

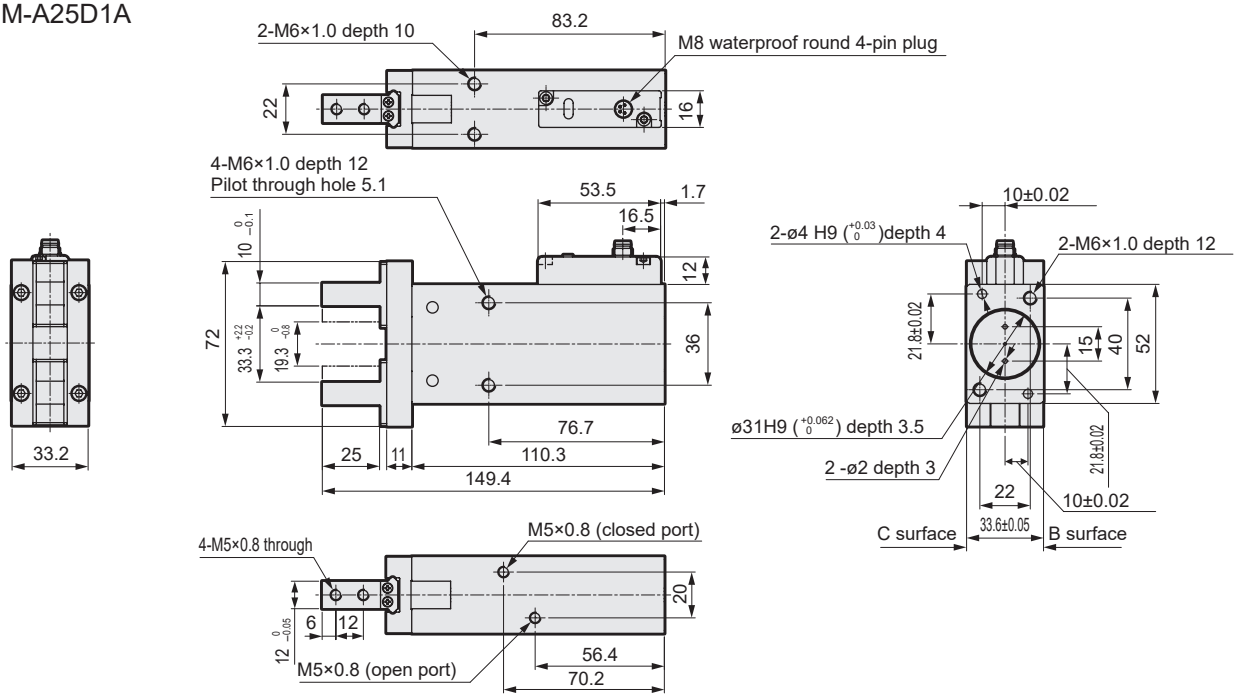

●LSHM-A25D2*

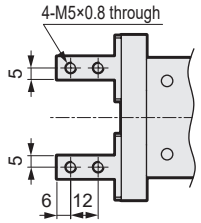

●LSHM-A25D3*

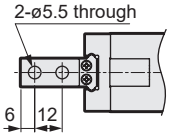

●LSHM-A25D4*

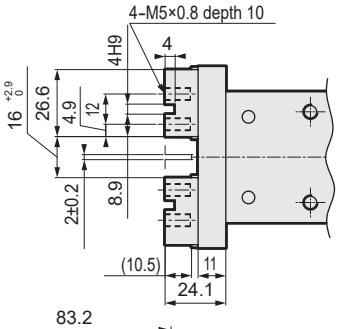

●LSHM-A25D*B/C

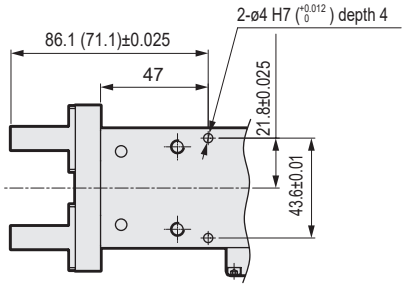

*1: Positioning holes are machined on surface B for LSHM-A25D*B and C for LSHM-A25D*C
*2: Dimensions shown in ( ) are for LSHM-A25D4.

●LSHM-A25D1D

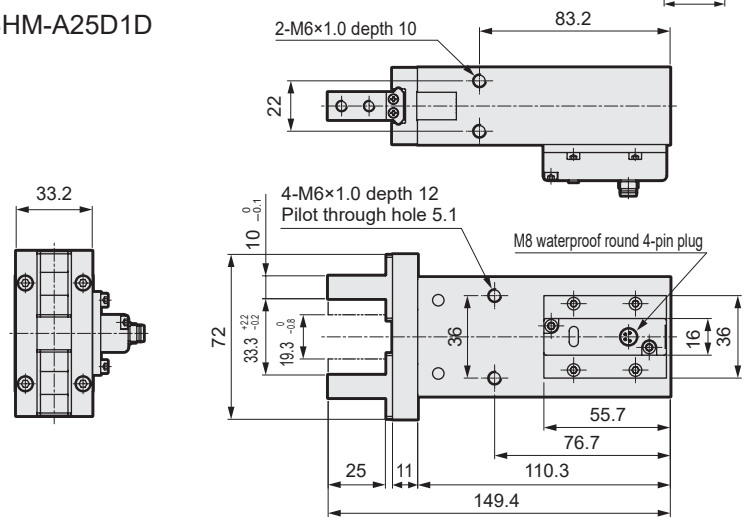

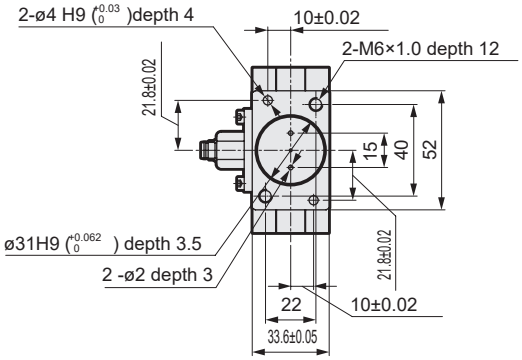

●LSHM-A25D*E

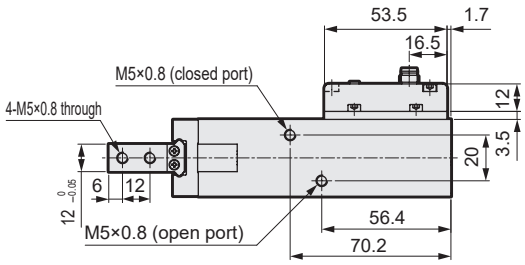

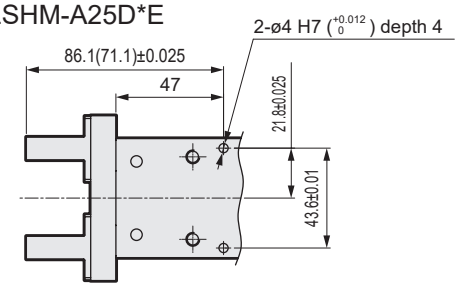

Linear Slide Hand with length measuring function, double acting with rubber cover

LSHM-G / LSHM-F Series

● Operating stroke length: 4, 6, 10, 14 mm

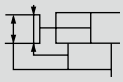

RoHS

Specifications

Item		LSHM-G / LSHM-F							
Bore size	mm	ø10		ø16		ø20		ø25	
Actuation		Double acting							
Working fluid		Compressed air							
Max. working pressure	MPa	0.7							
Min. working pressure	MPa	0.2		0.1		0.1		0.1	
Port size		M3		M5		M5		M5	
Operating stroke length	mm	4		6		10		14	
Power supply voltage		24 VDC ±10%							
Current consumption		25 mA or less							
Display lamp		Green LED ON when power applied							
Analog output		When fingers are closed: 1 V; when opened: 5 V *1, connection load: 100 kΩ or more							
Analog output linearity	Without correction adapter	±3% F.S. or less (ambient temperature 25°C)							
	With correction adapter	±0.5% F.S. or less (ambient temperature 25°C)							
Repeatability of analog output		±0.02 mm or less (ambient temperature 25°C, no deformation or wear of actuator / jig)							
Valid measured range length	mm	4.5		6.5		10		14	
Impact resistance (sensor / amplifier section)		294 m / s^2							
Vibration resistance (sensor / amplifier section)		10 to 55 Hz compound amplitude 1.5 mm, 2 hours per X, Y, Z direction							
Degree of protection (sensor / amplifier section)		IEC standards IP65							
Ambient temperature, humidity		10 to 60°C, 85% RH or less (no freezing)							
Amplifier mounting position		Side	Front	Side	Front	Side	Front	Side	Front
Weight	kg	0.113	0.125	0.236	0.253	0.462	0.482	0.792	0.813
Lubrication		Not required							

Note: Refer to page 1562 for the correction adapter.
*1: There is output fluctuation of 1 mV / °C.

Gripping power

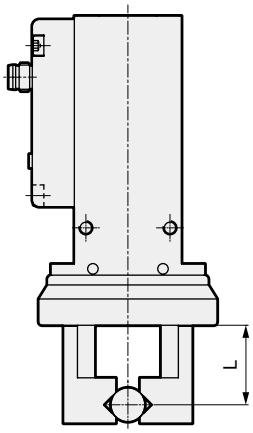

Unit: N

Bore size (mm)	Double acting	
	Open side	Closed side
ø10	17	11
ø16	45	34
ø20	66	42
ø25	104	65

*Supply pressure: 0.5 MPa, L = 20 mm, value at stroke center

LVDT displacement sensor operation principle

When exciting the primary coil (P), induced voltage is generated in the two secondary coils (S1 / S2) by electromagnetic induction. When the Hand is driven, the core position changes and a difference in induced voltage occurs between S1 and S2. This difference is used to output the position of the core as electric signals.

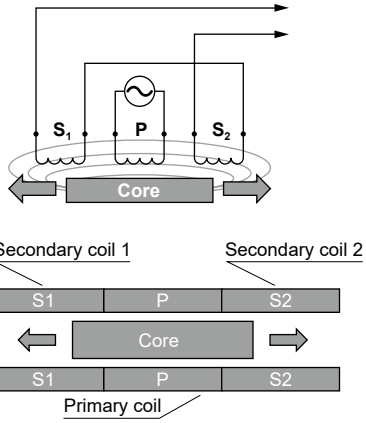

Analog output characteristics

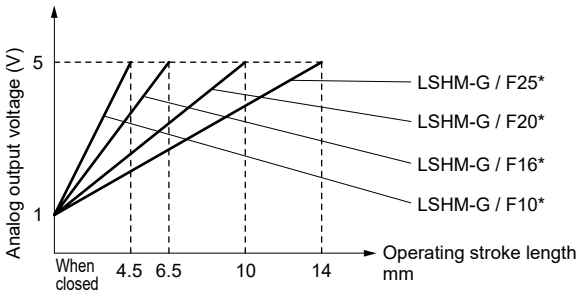

*The analog output voltage at shipment is 1 V on the closed side and 5 V on the open side, with the port closed and pressurized.

How to order

LSHM - G 10 D 1 A - N - HP2

- Ⓐ Rubber cover
- Ⓑ Bore size
- Ⓒ Actuation
- Ⓓ Finger
- Ⓔ Amp mounting position / grip center reference, high precision positioning hole
- Ⓕ Correction adapter option

Code	Description
Ⓐ Rubber cover	
G	Chloroprene rubber
F	Fluoro rubber
Ⓑ Bore size (mm)	
10	ø10
16	ø16
20	ø20
25	ø25
Ⓒ Actuation	
D	Double acting
Ⓓ Finger	
1	Basic
Ⓔ Amp mounting position / grip center reference, high precision positioning hole *1	
A	Amp side / no positioning hole
B	Amp side / rear with finger below and piping right
C	Amp side / rear with finger below and piping left
D	Amp front / no positioning hole
E	Amp front / rear with finger below and piping right
Ⓕ Correction adapter option	
N	Without correction adapter
A	Correction adapter attached

*1

Amp mounting position / grip center reference, high precision positioning hole position diagram

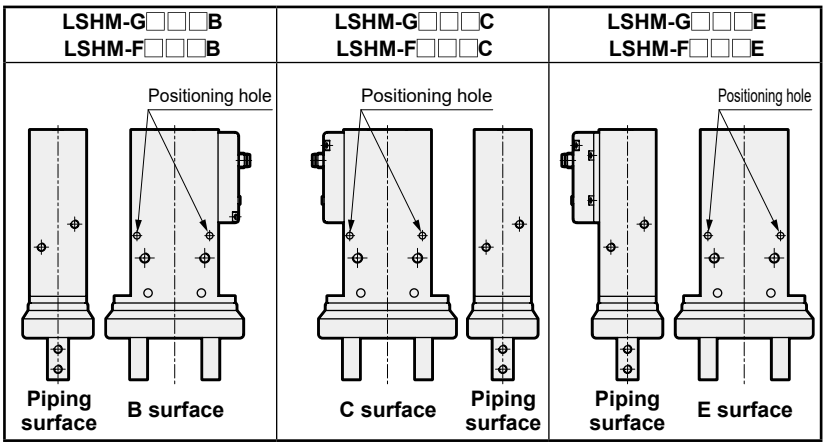

Refer to the Dimensions (pages 1558 to 1561) and page 1567 for details.

Plug contact array diagram

·Without correction adapter

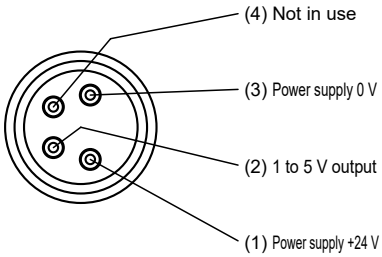

·Correction adapter attached

M8 socket (IN side) pin array

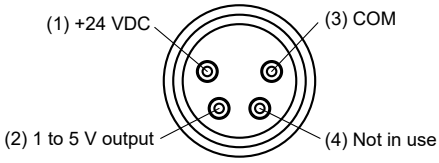

M8 plug (OUT side) pin array

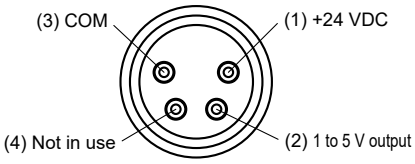

[Example of model No.]

LSHM-G10D1A-N-HP2

Model: Linear Slide Hand

Ⓐ Rubber cover	: Chloroprene rubber
Ⓑ Bore size	: ø10
Ⓒ Actuation	: Double acting
Ⓓ Finger	: Basic
Ⓔ Amp mounting position / grip center reference, high precision positioning hole	: Amp side / no positioning hole
Ⓕ Correction adapter option	: Without correction adapter

LCM
LCR
LCG
LCW
LCX
STM
STG
STS/STL
STR2
UCA2
ULK*
JSK/M2
JSG
JSC3/JSC4
USSD
UFCD
USC
UB
JSB3
LMB
LML
HCM
HCA
LBC
CAC4
UCAC2
CAC-N
UCAC-N
RCS2
RCC2
PCC
SHC
MCP
GLC
MFC
BBS
RRC
GRC
RV3*
NHS
HRL
LN
Hand
Chuk
MecHnd/Chuk
ShkAbs
FJ
FK
SpdContr
Ending
LSH-HP
LSH
FH100
BSA2
BHA/BHG
LHA
LHAG
HAP
HKP
HCP
HGP
HLF2
HLA/HLB
HLAG/HLBG
HLC
HLD
HMF
HMF-G
HMFB
HFP
FH500
HBL
HJL
HMD
HDL
HJD
BHE

Internal structure and parts list

● Amplifier side mounting
ø10

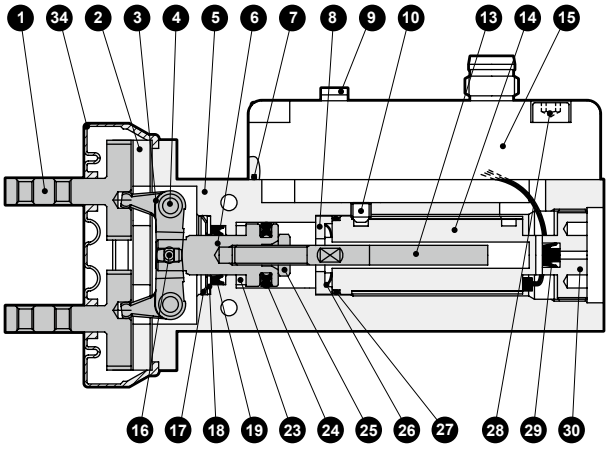

● Amplifier side mounting
ø16 to 25

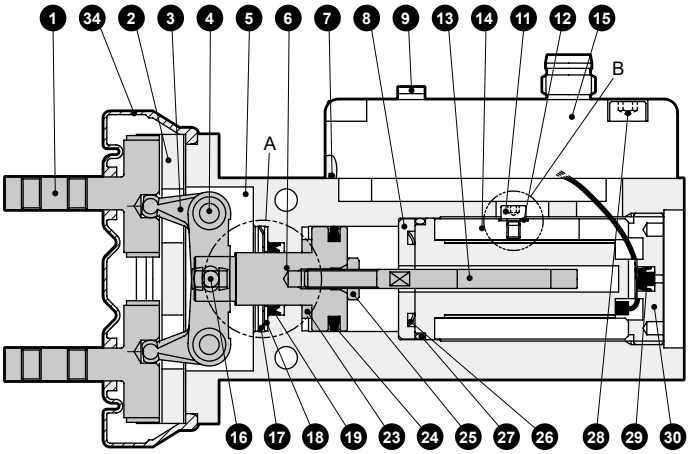

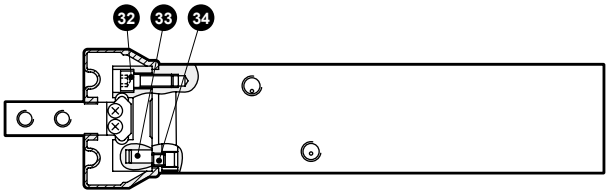

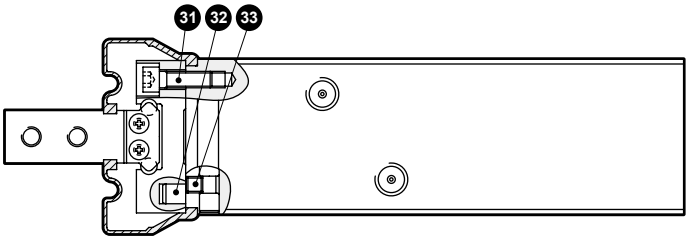

A part ø20, 25

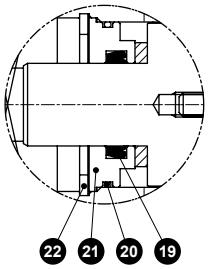

B part ø20, 25

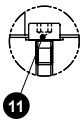

Cannot be disassembled

Parts list

No.	Part name	Material	Remarks	No.	Part name	Material	Remarks
1	Finger	Stainless steel		19	Rod packing	Nitrile rubber	
2	Linear guide	Stainless steel		20	O-ring	Nitrile rubber	
3	Lever	Stainless steel		21	Rod metal	Aluminum alloy	
4	Fulcrum axis	Steel		22	C-snap ring	Steel	
5	Body	Aluminum alloy		23	Cushion rubber	Urethane rubber	
6	Piston rod	Stainless steel		24	Piston packing	Nitrile rubber	
7	Gasket	Nitrile rubber		25	Nut	Stainless steel	
8	Washer retainer	Aluminum alloy		26	Wave washer	Stainless steel	
9	Plug	Nitrile rubber		27	O-ring	Nitrile rubber	
10	Hexagon socket set screw	Stainless steel	ø10	28	Hexagon socket head cap screw	Stainless steel	
11	Hexagon socket head cap screw	Stainless steel	ø16 to 25	29	Check valve	Nitrile rubber	
12	Flat washer	Stainless steel	ø16	30	Head cover	Aluminum alloy	
13	Core shaft	Steel		31	Hexagon socket head cap screw	Stainless steel	
14	Sensor body	-		32	Pin	Steel	
15	Amplifier	-		33	Hexagon socket set screw	Stainless steel	
16	Fulcrum axis	Steel		34	Rubber cover	Chloroprene rubber	LSHM-G*
17	CR ring	Stainless steel				Fluoro rubber	LSHM-F*
18	Cap	Stainless steel					

Repair parts list

Bore size (mm)	Material	Kit No.	Repair part No.	Bore size (mm)	Material	Kit No.	Repair part No.
ø10	Chloroprene rubber	LSH-G10K	34	ø20	Chloroprene rubber	LSH-G20K	34
	Fluoro rubber	LSH-F10K			Fluoro rubber	LSH-F20K	
ø16	Chloroprene rubber	LSH-G16K		ø25	Chloroprene rubber	LSH-G25K	
	Fluoro rubber	LSH-F16K			Fluoro rubber	LSH-F25K	

Internal structure and parts list

● Amplifier front mounting
ø10

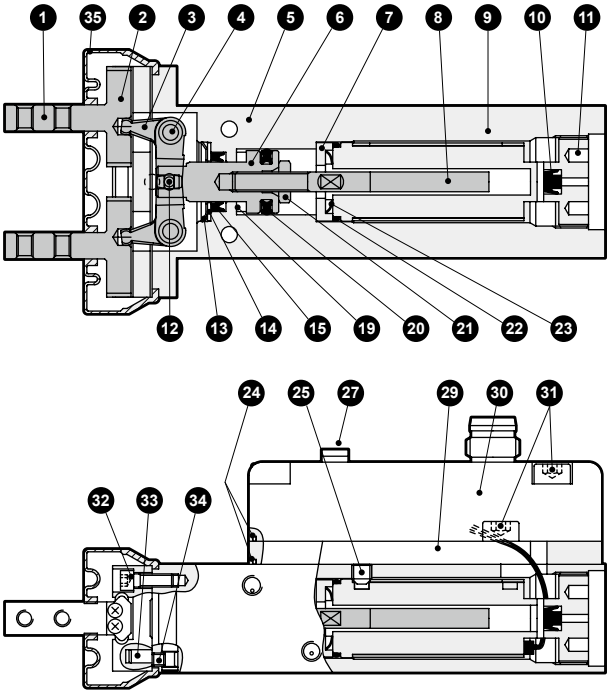

● Amplifier front mounting
ø16 to 25

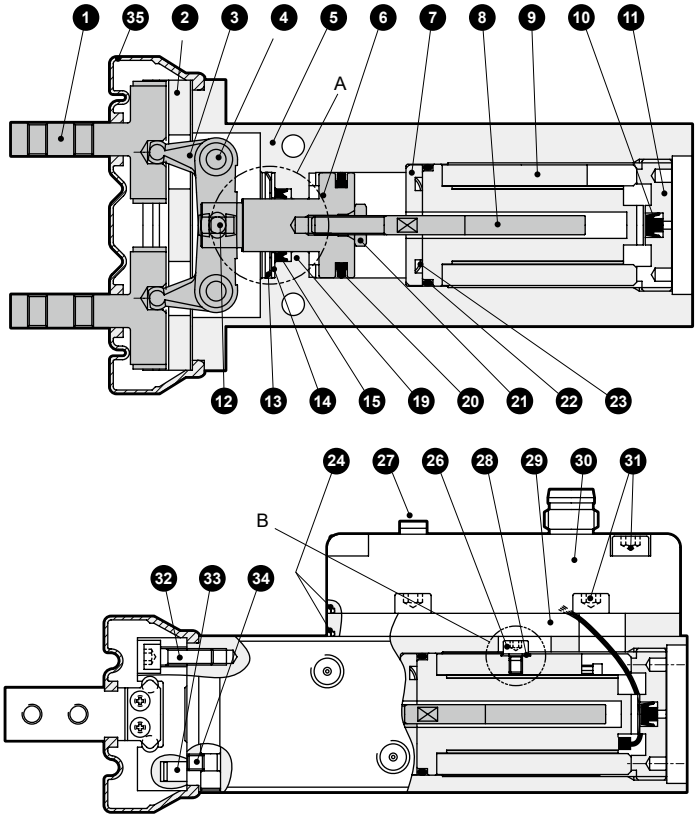

A part ø20, 25

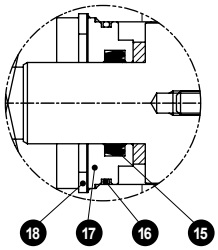

B part ø20, 25

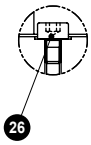

Cannot be disassembled

Parts list

No.	Part name	Material	Remarks	No.	Part name	Material	Remarks
1	Finger	Stainless steel		19	Cushion rubber	Urethane rubber	
2	Linear guide	Stainless steel		20	Piston packing	Nitrile rubber	
3	Lever	Stainless steel		21	Nut	Stainless steel	
4	Fulcrum axis	Steel		22	O-ring	Nitrile rubber	
5	Body	Aluminum alloy		23	Wave washer	Stainless steel	
6	Piston rod	Stainless steel		24	Gasket	Nitrile rubber	
7	Washer retainer	Aluminum alloy		25	Hexagon socket set screw	Stainless steel	ø10
8	Core shaft	Steel		26	Hexagon socket head cap screw	Stainless steel	ø16 to 25
9	Sensor body	-		27	Plug	Nitrile rubber	
10	Check valve	Nitrile rubber		28	Flat washer	Stainless steel	ø16
11	Head cover	Aluminum alloy		29	Amplifier adapter	Aluminum alloy	
12	Fulcrum axis	Steel		30	Amplifier	-	
13	CR ring	Stainless steel		31	Hexagon socket head cap screw	Stainless steel	
14	Cap	Stainless steel		32	Hexagon socket head cap screw	Stainless steel	
15	Rod packing	Nitrile rubber		33	Pin	Steel	
16	O-ring	Nitrile rubber		34	Hexagon socket set screw	Stainless steel	
17	Rod metal	Aluminum alloy		35	Rubber cover	Chloroprene rubber	LSHM-G*
18	C-snap ring	Steel				Fluoro rubber	LSHM-F*

Repair parts list

Bore size (mm)	Material	Kit No.	Repair part No.	Bore size (mm)	Material	Kit No.	Repair part No.
ø10	Chloroprene rubber	LSH-G10K	35	ø20	Chloroprene rubber	LSH-G20K	35
	Fluoro rubber	LSH-F10K			Fluoro rubber	LSH-F20K	
ø16	Chloroprene rubber	LSH-G16K		ø25	Chloroprene rubber	LSH-G25K	
	Fluoro rubber	LSH-F16K			Fluoro rubber	LSH-F25K	

LCM
LCR
LCG
LCW
LCX
STM
STG
STS/STL
STR2
UCA2
ULK*
JSK/M2
JSG
JSC3/JSC4
USSD
UFCD
USC
UB
JSB3
LMB
LML
HCM
HCA
LBC
CAC4
UCAC2
CAC-N
UCAC-N
RCS2
RCC2
PCC
SHC
MCP
GLC
MFC
BBS
RRC
GRC
RV3*
NHS
HRL
LN
Hand
Chuk
MecHnd/Chuk
ShkAbs
FJ
FK
SpdContr
Ending
LSH-HP
LSH
FH100
BSA2
BHA/BHG
LHA
LHAG
HAP
HKP
HCP
HGP
HLF2
HLA/HLB
HLAG/HLBG
HLC
HLD
HMF
HMF-G
HMFB
HFP
FH500
HBL
HJL
HMD
HDL
HJD
BHE

Dimensions (bore size: ø10)

● LSHM-G10D1A
LSHM-F10D1A

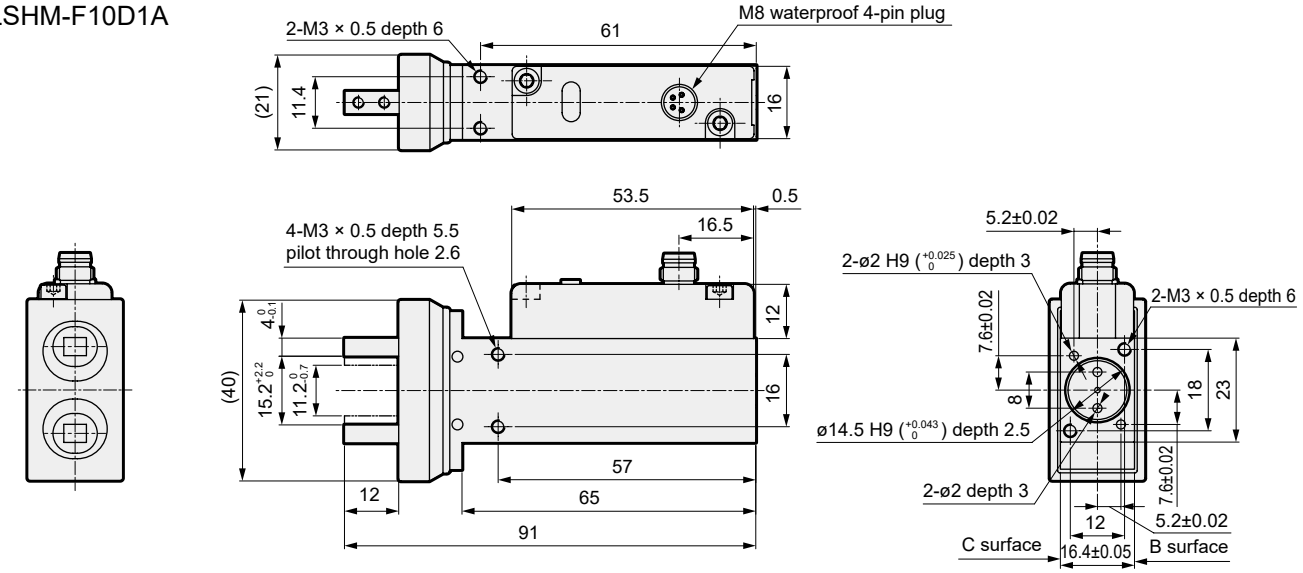

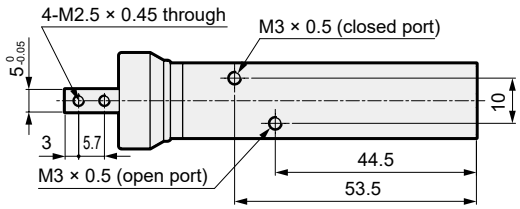

● LSHM-G10D1B / C
LSHM-F10D1B / C

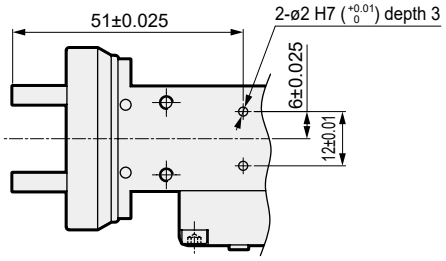

*1: Positioning holes are machined on B surface for LSHM-*10D1B and C surface for LSHM-*10D1C

● LSHM-G10D1D
LSHM-F10D1D

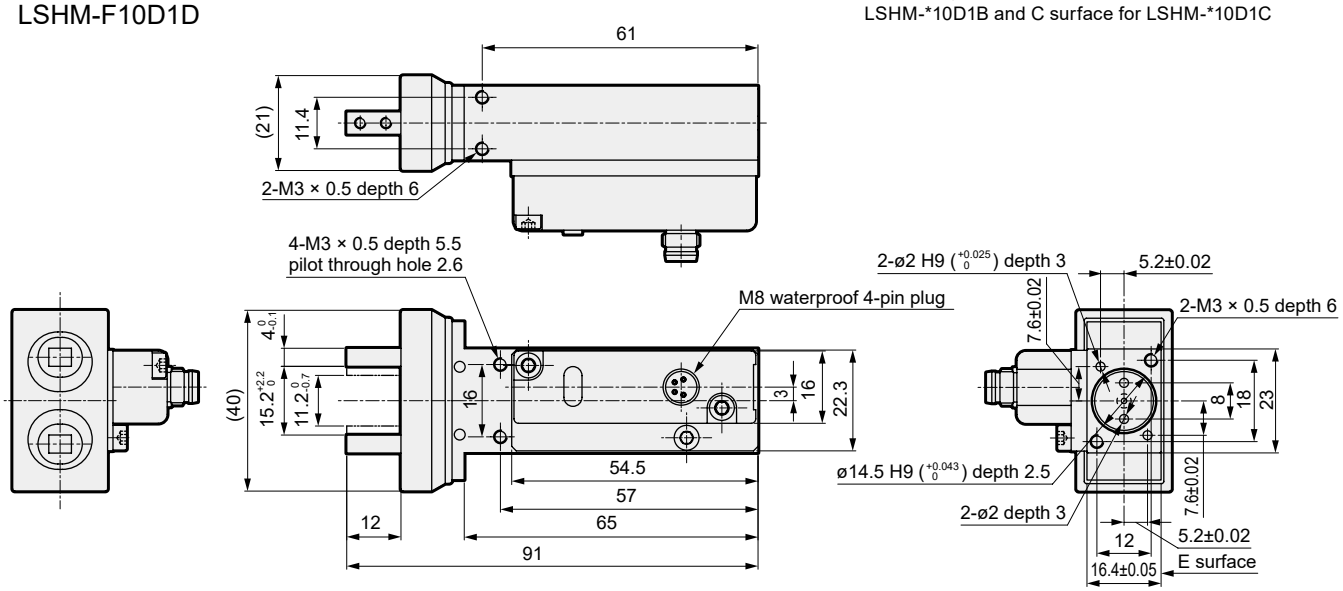

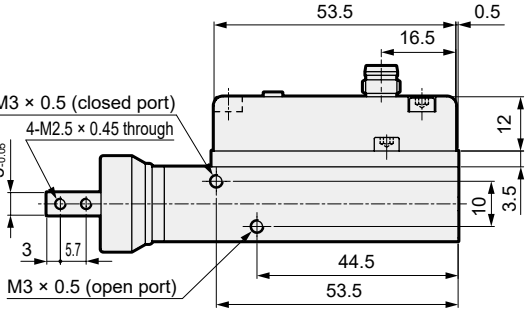

● LSHM-G10D1E
LSHM-F10D1E

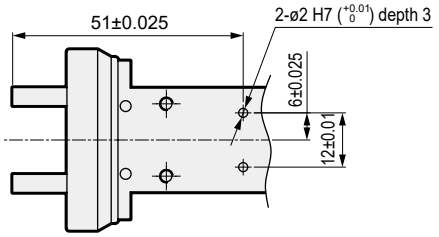

Dimensions (bore size: ø16)

● LSHM-G16D1A
LSHM-F16D1A

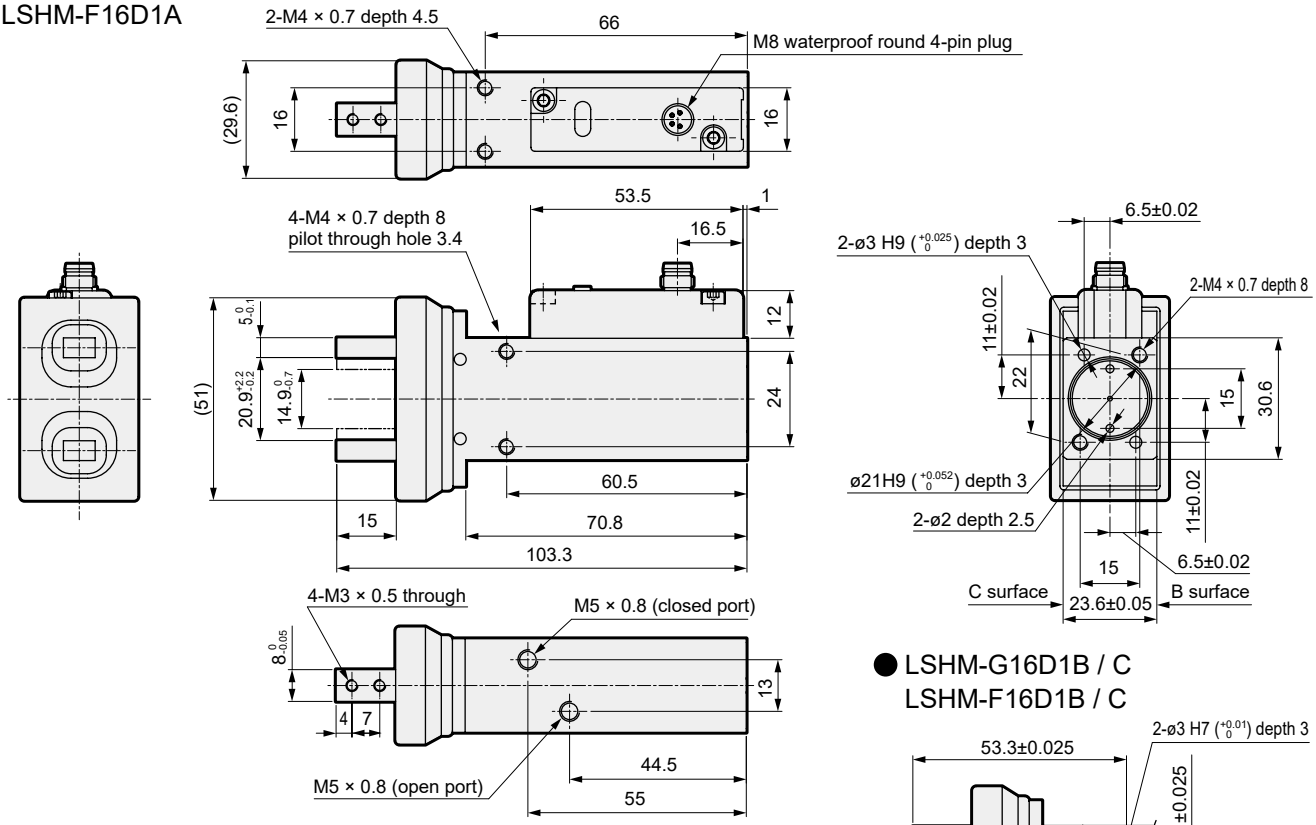

● LSHM-G16D1B / C
LSHM-F16D1B / C

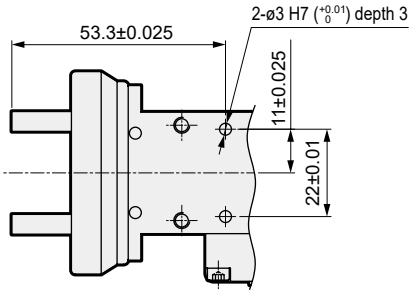

*1: Positioning holes are machined on B surface for LSHM-*16D1B and C surface for LSHM-*16D1C

● LSHM-G16D1D
LSHM-F16D1D

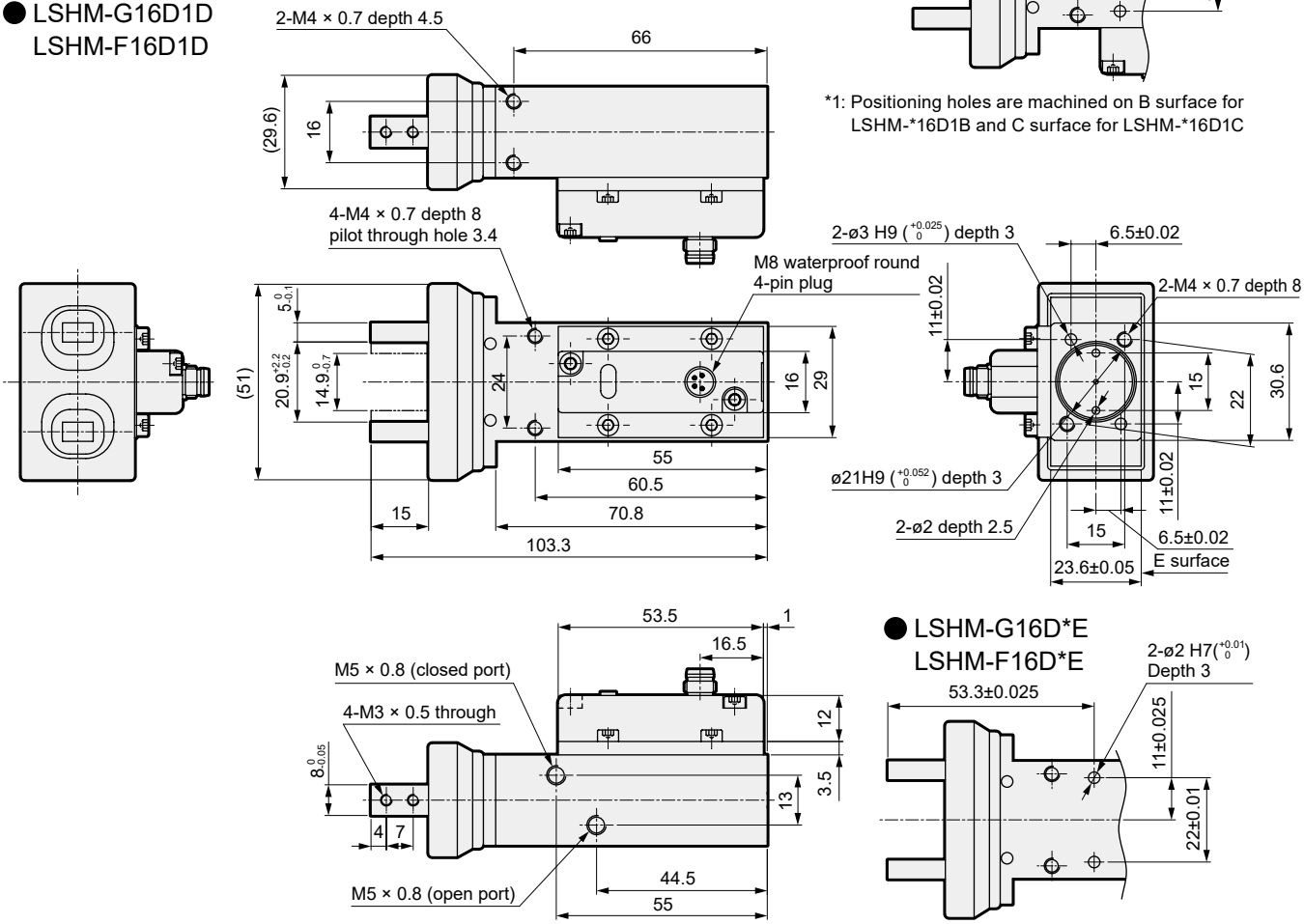

● LSHM-G16D*E
LSHM-F16D*E

LCM
LCR
LCG
LCW
LCX
STM
STG
STS/STL
STR2
UCA2
ULK*
JSK/M2
JSG
JSC3/JSC4
USSD
UFCD
USC
UB
JSB3
LMB
LML
HCM
HCA
LBC
CAC4
UCAC2
CAC-N
UCAC-N
RCS2
RCC2
PCC
SHC
MCP
GLC
MFC
BBS
RRC
GRC
RV3*
NHS
HRL
LN
Hand
Chuk
MecHnd/Chuk
ShkAbs
FJ
FK
SpdContr
Ending
LSH-HP
LSH
FH100
BSA2
BHA/BHG
LHA
LHAG
HAP
HKP
HCP
HGP
HLF2
HLA/HLB
HLAG/HLBG
HLC
HLD
HMF
HMF-G
HMFB
HFP
FH500
HBL
HJL
HMD
HDL
HJD
BHE

Dimensions (bore size: ø20)

● LSHM-G20D1A
LSHM-F20D1A

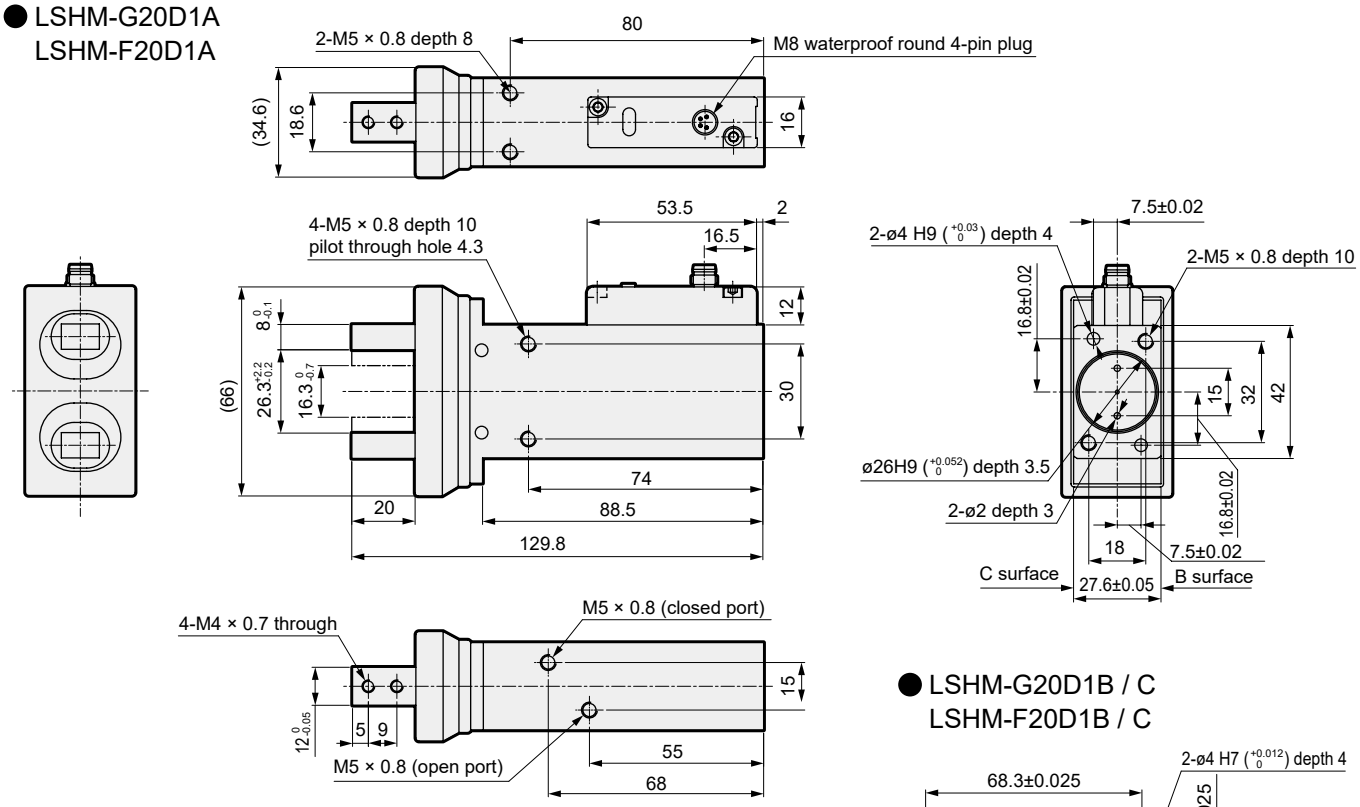

● LSHM-G20D1B / C
LSHM-F20D1B / C

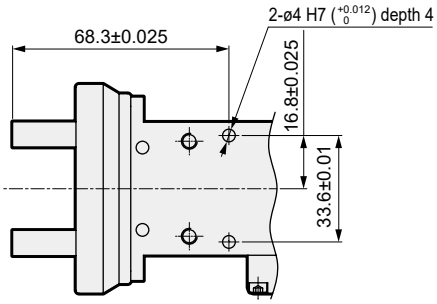

*1: Positioning holes are machined on B surface for LSHM-*20D1B and C surface for LSHM-*20D1C

● LSHM-G20D1D
LSHM-F20D1D

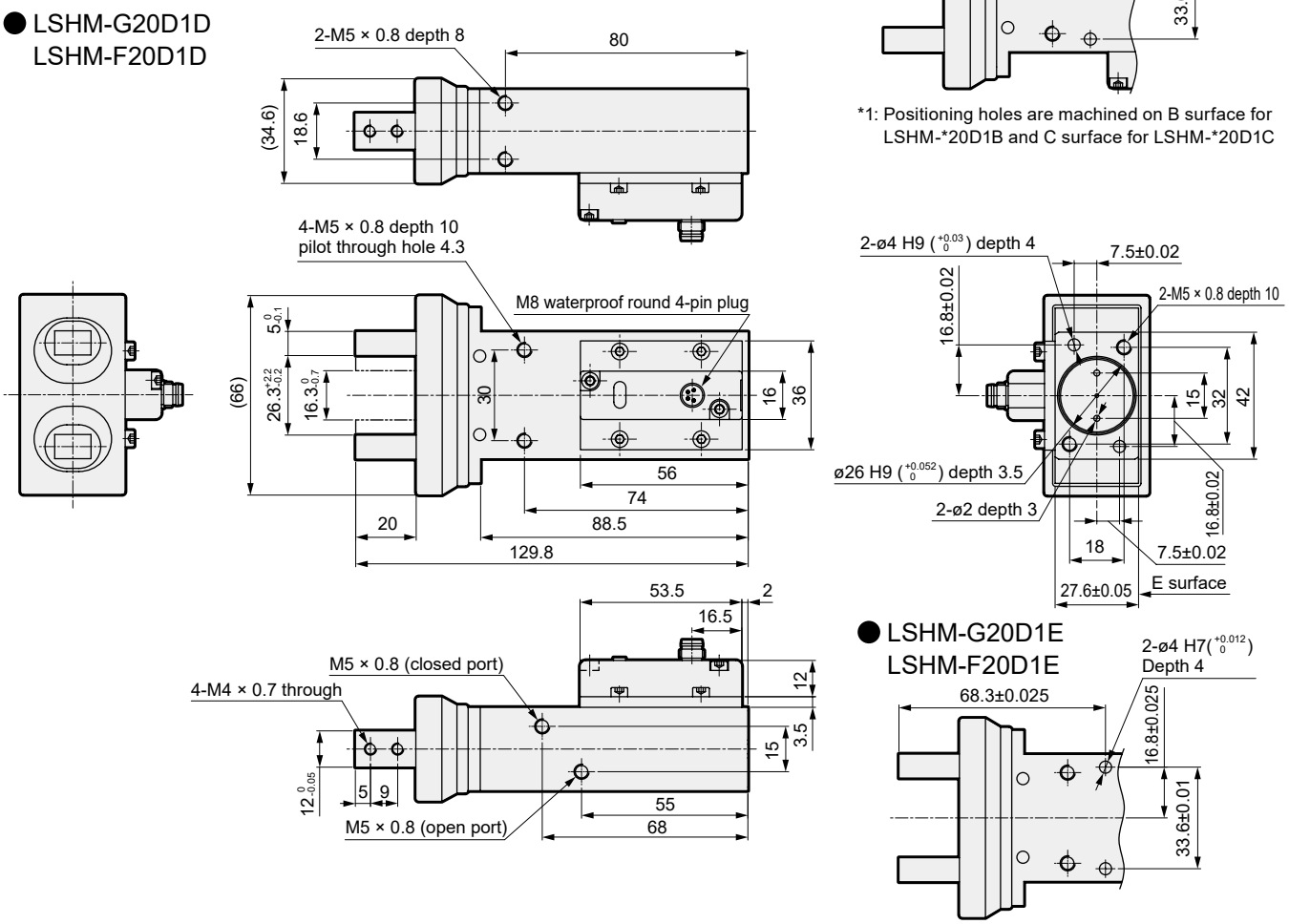

● LSHM-G20D1E
LSHM-F20D1E

Dimensions (bore size: ø25)

● LSHM-G25D1A
LSHM-F25D1A

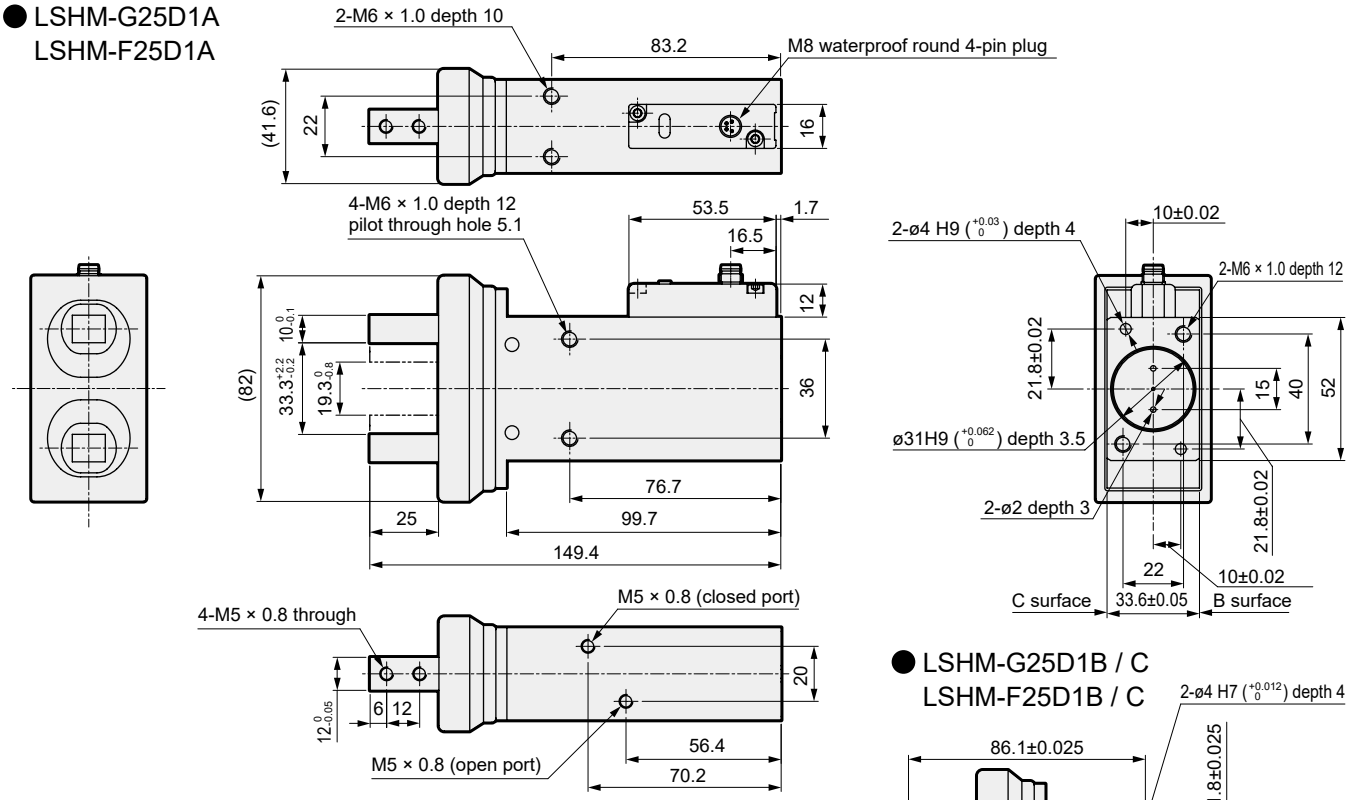

● LSHM-G25D1B / C
LSHM-F25D1B / C

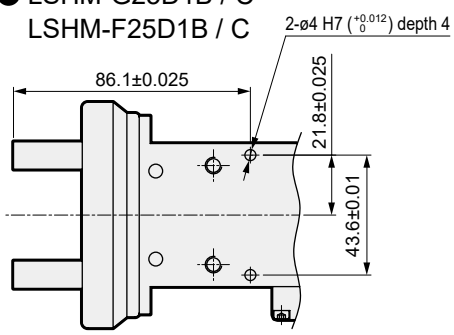

*1: Positioning holes are machined on B surface for LSHM-*25D1B and C surface for LSHM-*25D1C

● LSHM-G25D1D
LSHM-F25D1D

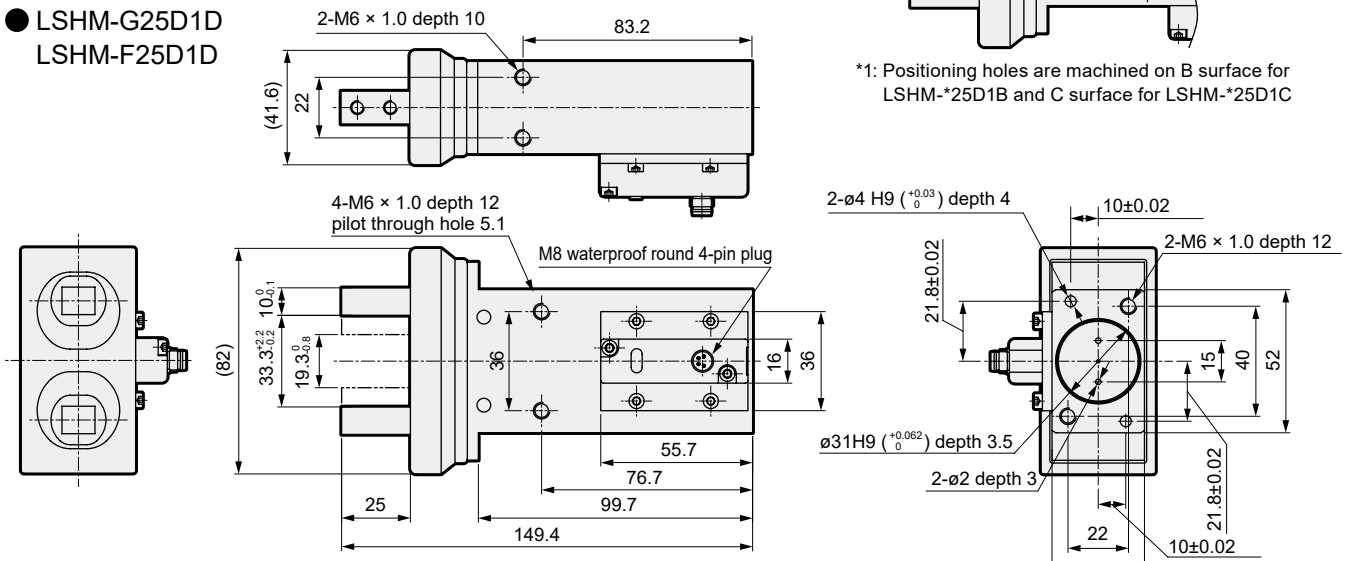

● LSHM-G25D1E
LSHM-F25D1E

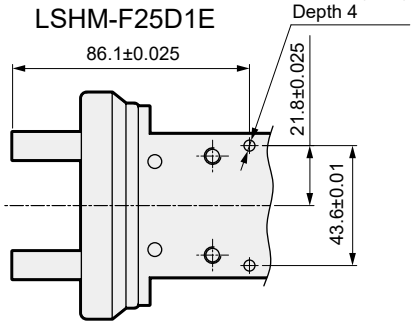

LCM
LCR
LCG
LCW
LCX
STM
STG
STS/STL
STR2
UCA2
ULK*
JSK/M2
JSG
JSC3/JSC4
USSD
UFCD
USC
UB
JSB3
LMB
LML
HCM
HCA
LBC
CAC4
UCAC2
CAC-N
UCAC-N
RCS2
RCC2
PCC
SHC
MCP
GLC
MFC
BBS
RRC
GRC
RV3*
NHS
HRL
LN
Hand
Chuk
MecHnd/Chuk
ShkAbs
FJ
FK
SpdContr
Ending
LSH-HP
LSH
FH100
BSA2
BHA/BHG
LHA
LHAG
HAP
HKP
HCP
HGP
HLF2
HLA/HLB
HLAG/HLBG
HLC
HLD
HMF
HMF-G
HMFB
HFP
FH500
HBL
HJL
HMD
HDL
HJD
BHE

Correction adapter

The analog output linearity will be corrected. Please use for applications where high-accuracy linearity is required.

Specifications

Item	Description
Power supply voltage	24 VDC ±10%
Current consumption	35 mA or less
Display lamp	Red LED lit when power applied
Analog input	1 to 5 V (LSHM Series output voltage)
Analog output	1 to 5 V, connection load 50 kΩ or more
Analog output linearity	±0.5%F.S. or less (ambient temperature 25°C, LSHM Series connection, CKD provided measuring method)
Repeatability of analog output	±0.02 mm or less (ambient temperature 25°C, no deformation or wear of actuator/jig)
Input connector	M8 waterproof round 4-pin connector socket
Output connector	M8 waterproof round 4-pin connector plug
Impact resistance	294 m/s^2
Degree of protection	IEC standards IP65
Ambient temperature, humidity	10 to 60°C, 85% RH or less
Mounting method	Direct mounting
Weight	40 g

*Use the default combination of LSHM and correction adapter.

Dimensions

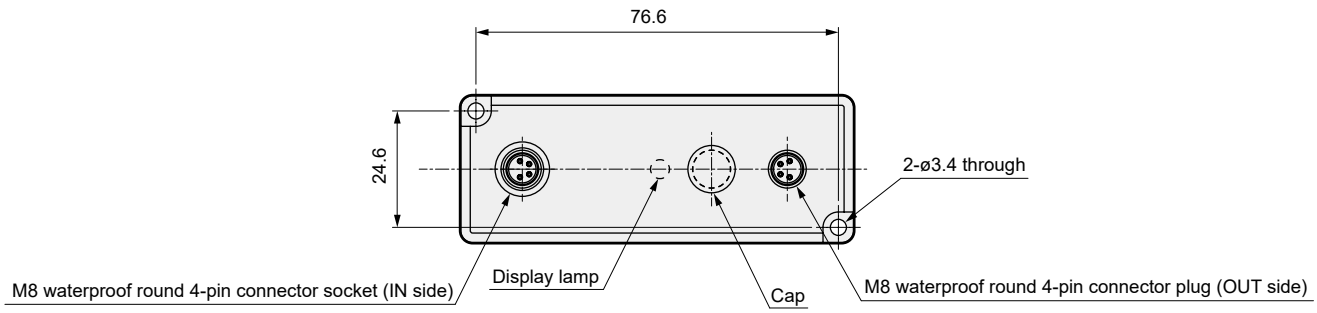

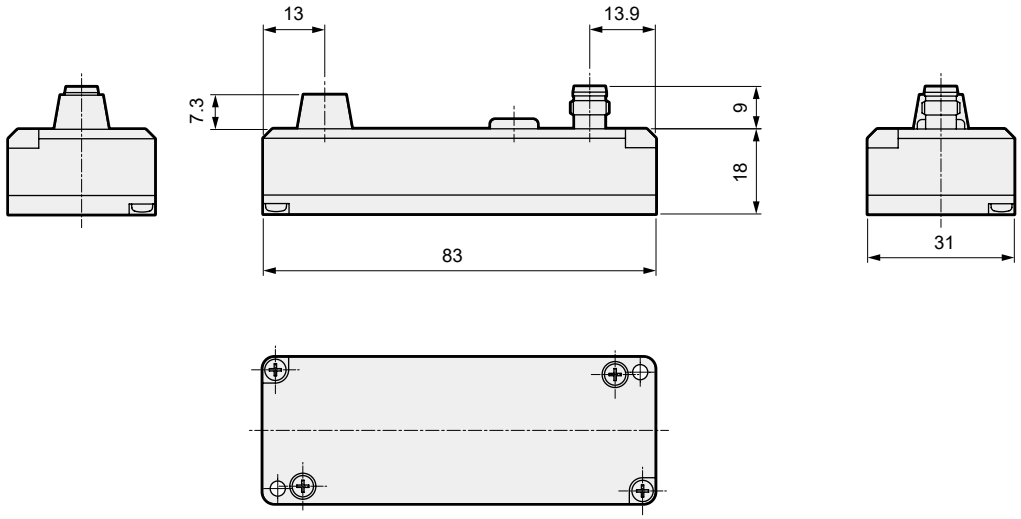

MEMO

LCM
LCR
LCG
LCW
LCX
STM
STG
STS/STL
STR2
UCA2
ULK*
JSK/M2
JSG
JSC3/JSC4
USSD
UFCD
USC
UB
JSB3
LMB
LML
HCM
HCA
LBC
CAC4
UCAC2
CAC-N
UCAC-N
RCS2
RCC2
PCC
SHC
MCP
GLC
MFC
BBS
RRC
GRC
RV3*
NHS
HRL
LN
Hand
Chuk
MecHnd/Chuk
ShkAbs
FJ
FK
SpdContr
Ending
LSH-HP
LSH
FH100
BSA2
BHA/BHG
LHA
LHAG
HAP
HKP
HCP
HGP
HLF2
HLA/HLB
HLAG/HLBG
HLC
HLD
HMF
HMF-G
HMFB
HFP
FH500
HBL
HJL
HMD
HDL
HJD
BHE

System configuration

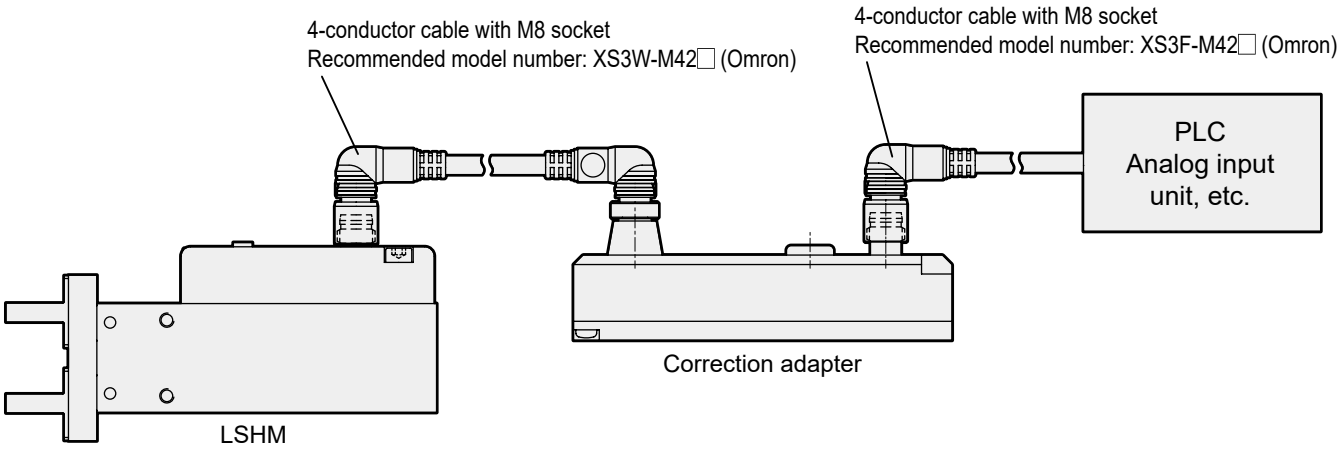

Internal circuit

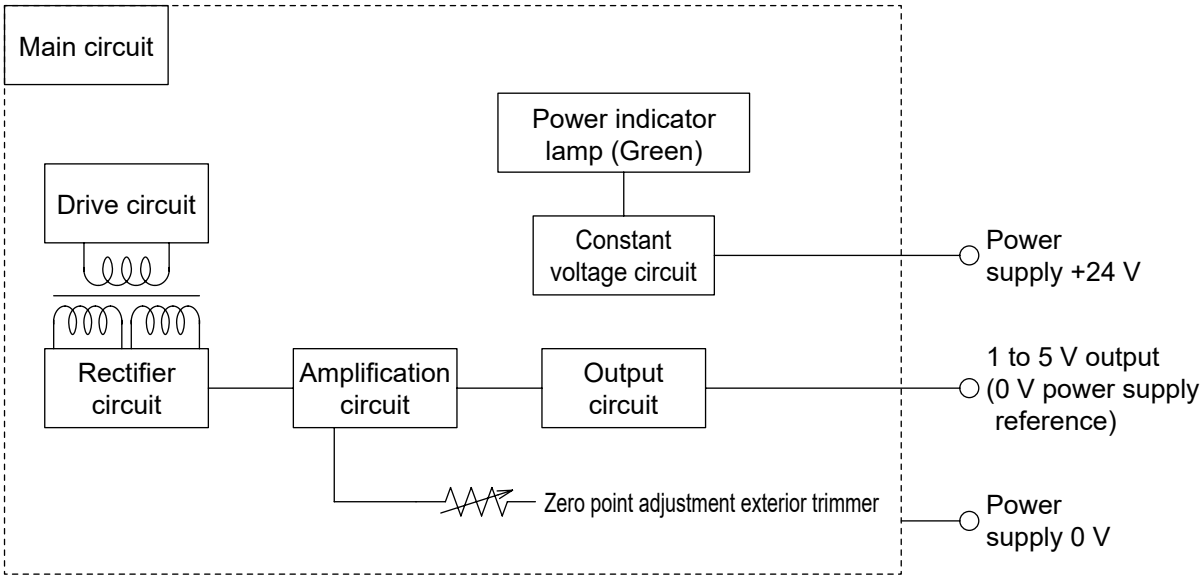

Plug contact array diagram (LSHM)

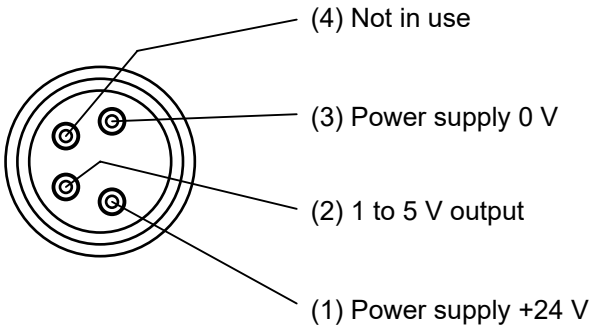

Internal circuit (correction adapter)

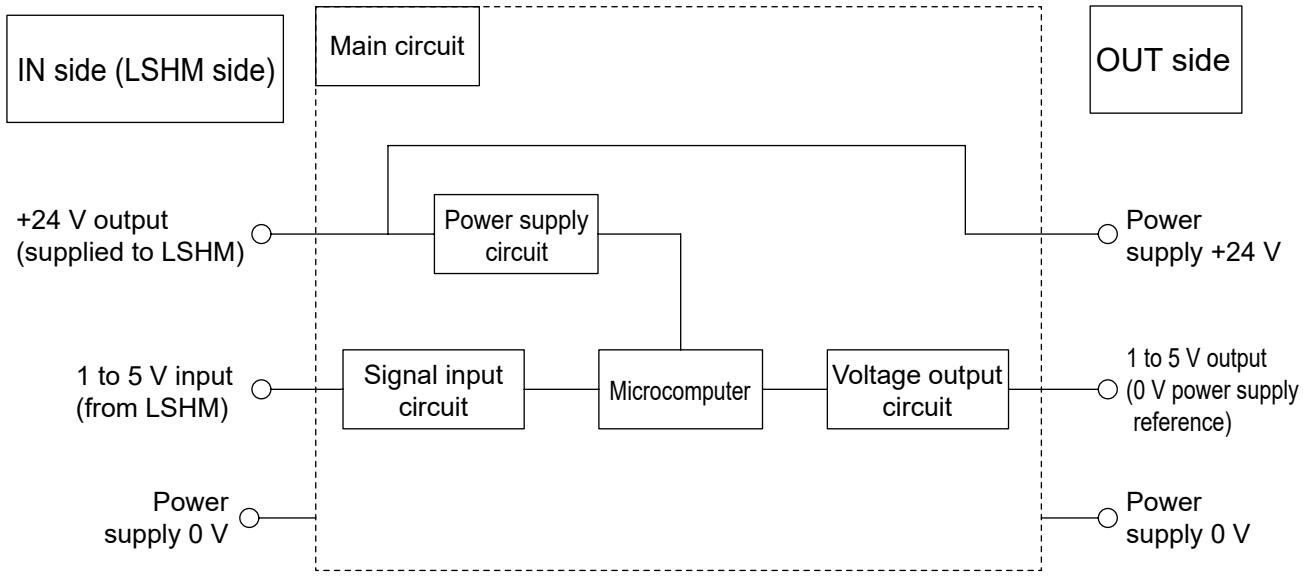

Plug contact array diagram (correction adapter)

M8 socket (IN side) pin array

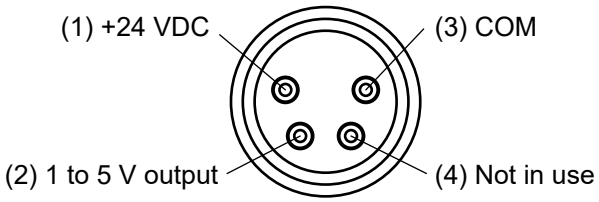

M8 plug (OUT side) pin array

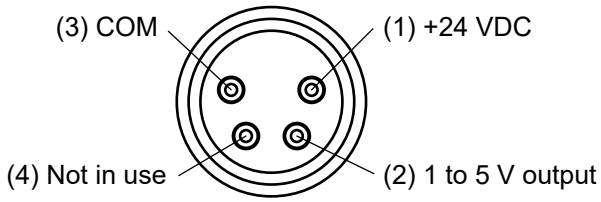

LCM
LCR
LCG
LCW
LCX
STM
STG
STS/STL
STR2
UCA2
ULK*
JSK/M2
JSG
JSC3/JSC4
USSD
UFCD
USC
UB
JSB3
LMB
LML
HCM
HCA
LBC
CAC4
UCAC2
CAC-N
UCAC-N
RCS2
RCC2
PCC
SHC
MCP
GLC
MFC
BBS
RRC
GRC
RV3*
NHS
HRL
LN
Hand
Chuk
MecHnd/Chuk
ShkAbs
FJ
FK
SpdContr
Ending
LSH-HP
LSH
FH100
BSA2
BHA/BHG
LHA
LHAG
HAP
HKP
HCP
HGP
HLF2
HLA/HLB
HLAG/HLBG
HLC
HLD
HMF
HMF-G
HMFB
HFP
FH500
HBL
HJL
HMD
HDL
HJD
BHE

LSHM Series usage guide

Workpiece measurement using the entire operating stroke length range

Ex) Judgment of workpiece model in multi-model production equipment, etc.

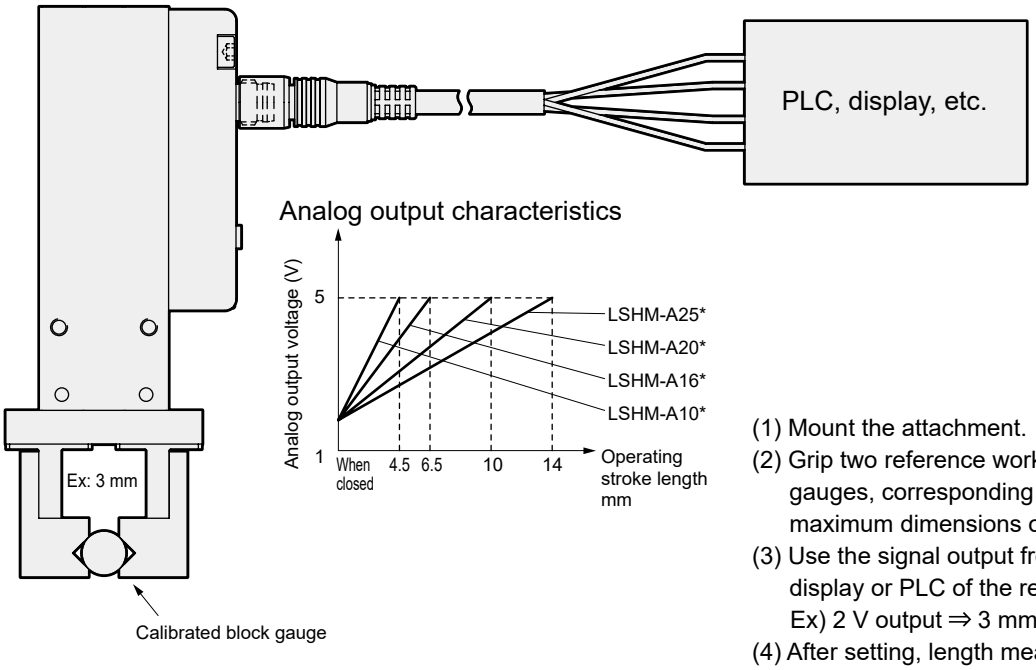

(1) Mount the attachment.
(2) Grip two reference workpieces such as block gauges, corresponding to the minimum and maximum dimensions of the workpiece to be used.
(3) Use the signal output from the sensor to set the display or PLC of the receiving side.
Ex) 2 V output ⇒ 3 mm, 4 V output ⇒ 8 mm
(4) After setting, length measurement is possible with linearity of ±3% F.S. (±0.5% F.S. with correction adapter option) over the entire stroke

Higher-precision measurement through limiting the measurement range

Ex) Confirming that workpiece dimensions are within tolerance range, confirming wear and deformation of attachments and jigs, etc.

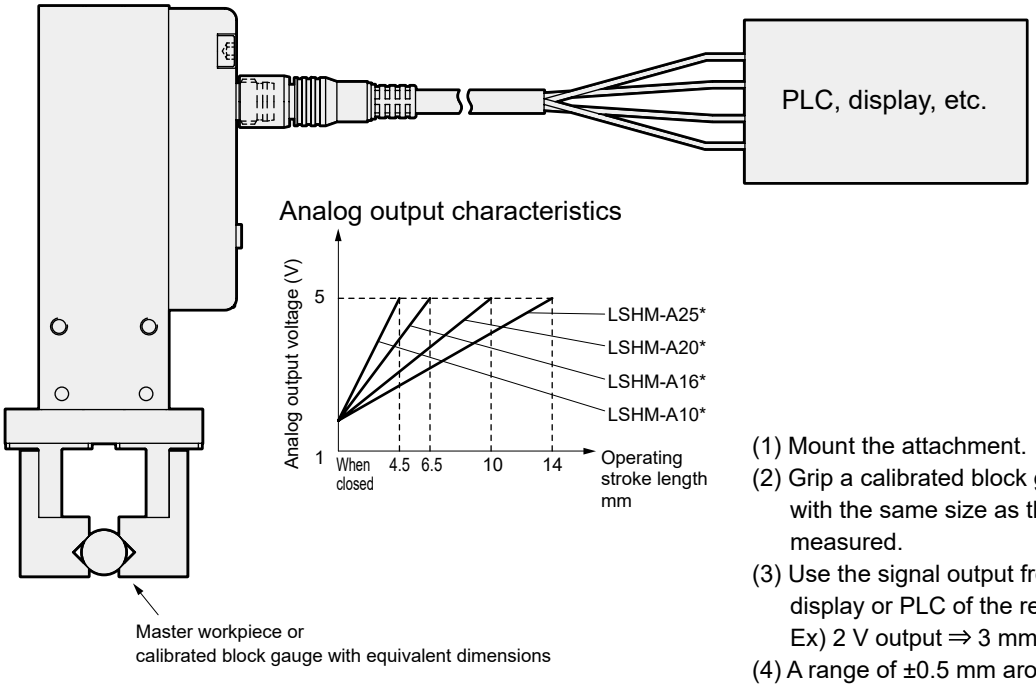

(1) Mount the attachment.
(2) Grip a calibrated block gauge or master workpiece with the same size as the workpiece to be measured.
(3) Use the signal output from the sensor to set the display or PLC of the receiving side.
Ex) 2 V output ⇒ 3 mm
(4) A range of ±0.5 mm around the set dimensions can be measured with linearity of ±0.5%FS (reference value when without correction adapter).

Positional reference of positioning hole

● Positioning hole on body end face

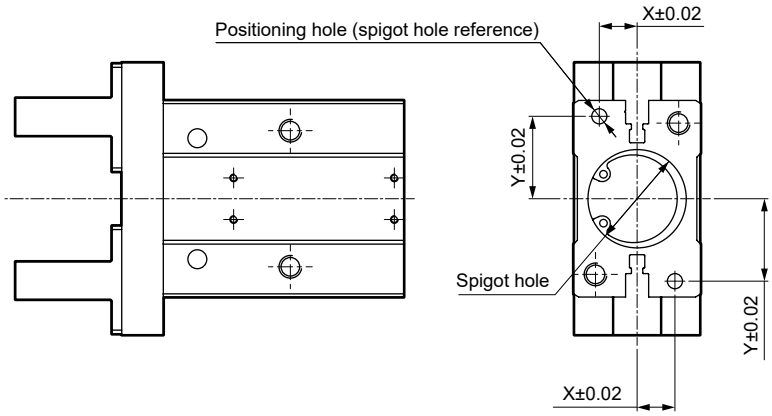

● Grip center reference, high precision positioning hole
Positioning can be performed with reference to the gripping center

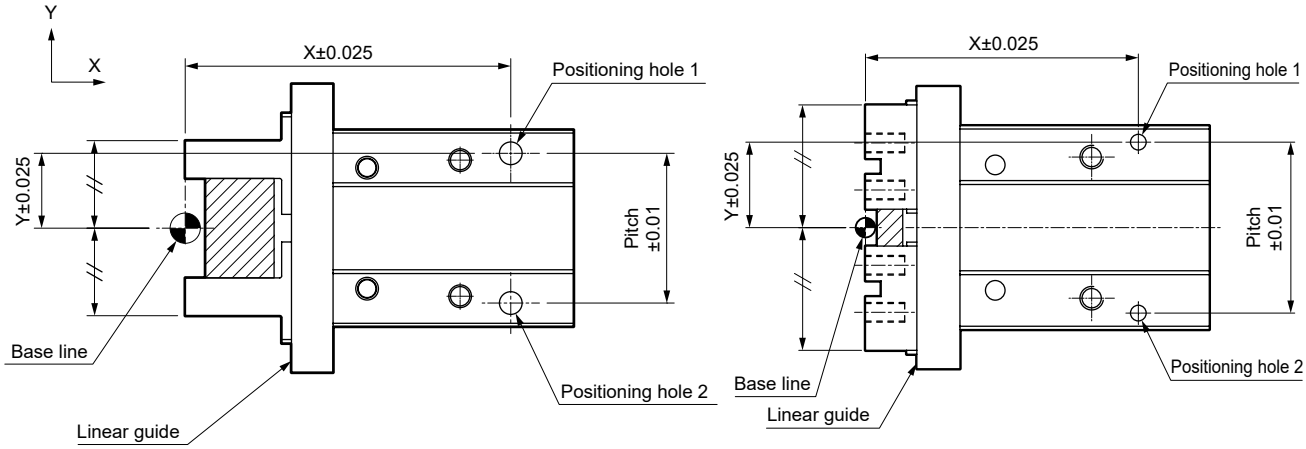

Base line of positioning hole
With the workpiece gripped at custom stroke length, the finger facing left and the linear direction of the linear guide as the Y axis,
X axis direction reference: Upper finger tip
Y axis direction reference: Center of outer surface of finger

Ex) When standard finger faces left and piping is on top
LSH*-□□□□R

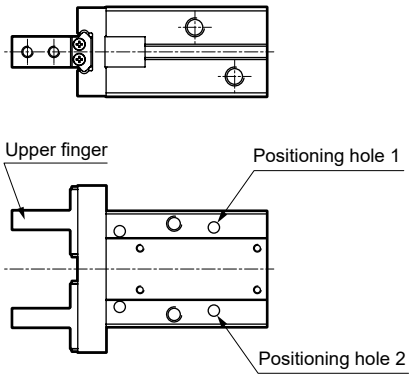

Ex) When standard finger faces left and piping is underneath
LSH*-□□□□L

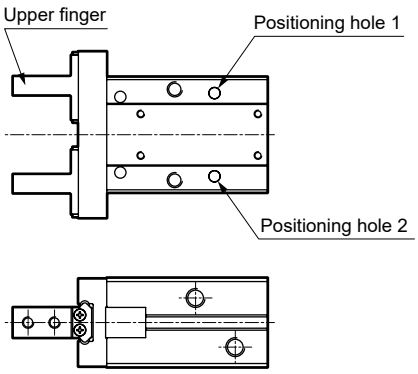

LCM
LCR
LCG
LCW
LCX
STM
STG
STS/STL
STR2
UCA2
ULK*
JSK/M2
JSG
JSC3/JSC4
USSD
UFCD
USC
UB
JSB3
LMB
LML
HCM
HCA
LBC
CAC4
UCAC2
CAC-N
UCAC-N
RCS2
RCC2
PCC
SHC
MCP
GLC
MFC
BBS
RRC
GRC
RV3*
NHS
HRL
LN
Hand
Chuk
MecHnd/Chuk
ShkAbs
FJ
FK
SpdContr
Ending
LSH-HP
LSH
FH100
BSA2
BHA/BHG
LHA
LHAG
HAP
HKP
HCP
HGP
HLF2
HLA/HLB
HLAG/HLBG
HLC
HLD
HMF
HMF-G
HMFB
HFP
FH500
HBL
HJL
HMD
HDL
HJD
BHE

LSH-HP selection guide

STEP-1 Select a suitable model by required gripping force

(1) Calculation of required gripping force

Gripping force F_W satisfying the following equation is required to transport the workpiece (weight W_L).

$$F_W > \frac{W_L \times g \times K}{n}$$

F_W : Required gripping force [N]
n : Number of attachments = 2
W_L : Weight of workpiece [kg]
g : Gravity acceleration 9.8 [m/s^2]
K : Transport coefficient
5 [holding only]
10 [normal transport]
20 [suddenly accelerated transport]

Transport coefficient K

Calculation example: When decelerating and stopping in 0.1 second from transport speed of V = 0.75 m/s with friction coefficient μ of workpiece and finger as 0.1, see below.

Obtain the transport coefficient K from the force applied to the workpiece

·Inertial force = W_L (V/t)

·Gravity = W_L g

·Required gripping force F_W > $\frac{W_L(V/t)+W_L g}{n\mu} = \frac{W_L(V/t+g)}{n\mu} = \frac{17.3\ W_L}{2 \times 0.1} = 86.5 W_L$

∴Here, the transport coefficient K is calculated from the above equation: $\frac{V/t+g}{\mu g} = \frac{0.75/0.1+9.8}{0.1 \times 9.8} \approx 20$

V: Transport speed [m/sec]
t: Deceleration time [sec]
μ: Coefficient of friction

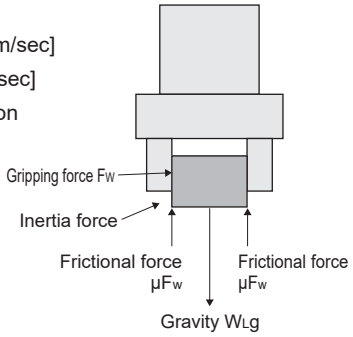

Note) Allowance is required for transport coefficient K due to impacts during transportation, etc. Even when the coefficient of friction μ is higher than μ = 0.1, set transport coefficient K from 10 to 20 or more for safety.

(2) Model selection by required gripping force

The gripping force changes depending on the "grip direction", "attachment length", and "supply pressure". Confirm on the gripping force graph that sufficient force can be obtained under the usage conditions.

Gripping force graph page	
LSH*-A**D	Page 1570
LSH*-A**S/C	Page 1571
LSH*-G/F**D	Page 1572
LSH*-G/F**S/C	Page 1573

Grip direction

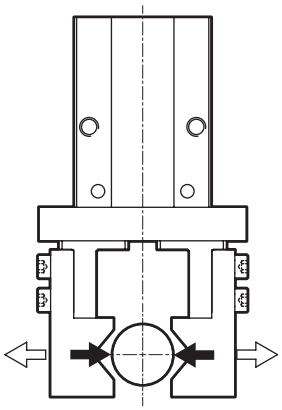

● Open direction (⇦)
● Closed direction (➡)

Attachment length ℓ

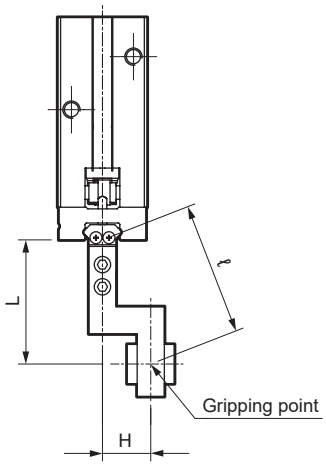

Understanding the gripping force graph
(For LSH-A20D closing direction)

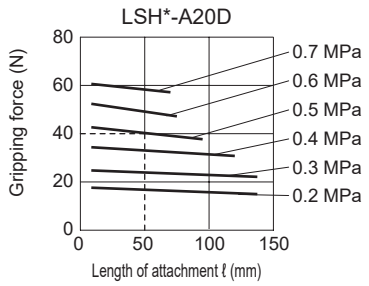

For example, when supply pressure is 0.5 MPa and attachment length is 50 mm, the gripping force is 40 N.

STEP-2 Confirmation of attachment shape

Use the attachment within the range shown on page 1574.

Example) L: 50 mm, H: 25 mm

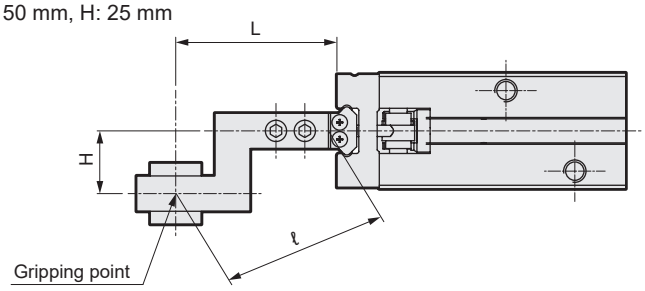

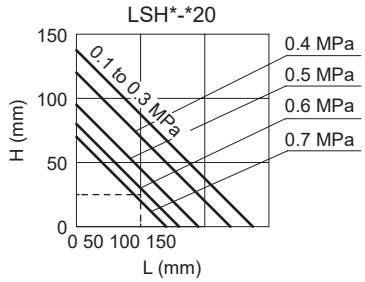

When LSH-A20D is selected, the intersection of L:50mm and H:25mm will be inside the supply pressure line of 0.5MPa, so it can be used.

●Use attachments that are as short and lightweight as possible.

If the attachment is long and heavy, inertia increases when opening and closing. This may cause play in the finger, and adversely affect durability.

●Even if the attachment shape is within the performance data, by making it as small as possible enables the product to have a longer service life. Also, if ℓ is long, unexpected vibration, etc., could cause erroneous gripping and falling during transport. With "Cylinder diameter x1.3/working pressure" as a guide, if ℓ is longer than that, set the transport coefficient of STEP-1 to a high value (Guideline: Transport coefficient 20 or more)

●The weight of the attachment affects the service life, so check that the weight is less than the following value.

W<1/4H (1 pc.) W: Weight of attachment
H: Product weight of Hand

STEP-3 Confirmation of external forces applied to finger

When an external force is applied to a finger such as when conveying and inserting workpieces, use it within [Table 1] parameters.
*When in use during transport, consider the impact at the end.

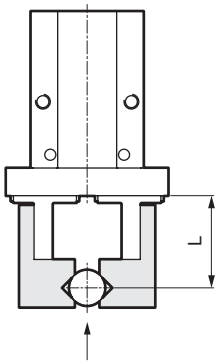

Vertical load
W (N)

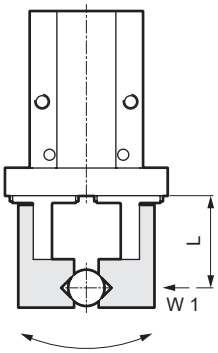

Bending moment
M1 (N·m)=W1xL

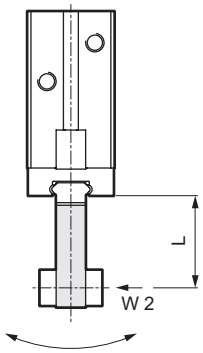

Radial moment
M2 (N·m)=W2xL

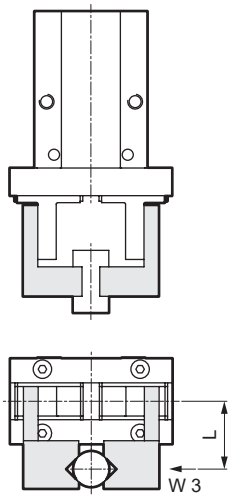

Torsion moment
M3 (N·m)=W3xL

L: Distance to the point where load is applied

[Table 1] Allowable load value

Bore size	Vertical load Wmax (N)	Bending moment M1max (N·m)	Radial moment M2max (N·m)	Torsion moment M3max (N·m)
ø6	15	0.06	0.06 (0.12)	0.06
ø10	75	0.39	0.39 (0.69)	0.39
ø16	147	1.32	1.32 (2.2)	1.32
ø20	265	2.1	2.1 (4.0)	2.1
ø25	343	3.0	3.0 (6.0)	3.0
ø32	490	4.5	4.5 (9.0)	4.5

If multiple external forces are applied, the resultant external forces (formula below) must be less than 1.
WT=W/Wmax+M1/M1max+M2/M2max+M3/M3max<1

When using the product with radial moment of ( ) or less, keep L and H dimensions at 2/3 or less of the length stipulated on page 1570.

Sample calculation (1): When conveying a workpiece

Model No.: LSH-A20D, When a workpiece (weight: m=0.8kg, center of gravity: L=60mm) is gripped and transported with an attachment (weight: mk:0.06kg, center of gravity: Lk=30mm)

(g: Gravity acceleration 9.8m/s^2, α: Coefficient of impact generated at end = 3)

M_1= α x W_1xL = αx (m_kxgxL_kx2+mxgxL)

= 3 x (0.06 x 9.8 x 30 x 10^{-3} x 2 + 0.8 x 9.8 x 60 x 10^{-3}) ≈ 1.5 N·m, and M_1max = 2.1 N·m or below, and therefore, can be used.

Sample calculation (2): When inserting a workpiece

Model No.: LSH-A20D, L=40mm for load W_1: When 40 N is added

M_1=W_1xL=40x40x10^{-3}= 1.6 N·m and $M1_{max}$= 2.1 N·m or less, so use is possible

LCM
LCR
LCG
LCW
LCX
STM
STG
STS/STL
STR2
UCA2
ULK*
JSK/M2
JSG
JSC3/JSC4
USSD
UFCD
USC
UB
JSB3
LMB
LML
HCM
HCA
LBC
CAC4
UCAC2
CAC-N
UCAC-N
RCS2
RCC2
PCC
SHC
MCP
GLC
MFC
BBS
RRC
GRC
RV3*
NHS
HRL
LN
Hand
Chuk
MecHnd/Chuk
ShkAbs
FJ
FK
SpdContr
Ending
LSH-HP
LSH
FH100
BSA2
BHA/BHG
LHA
LHAG
HAP
HKP
HCP
HGP
HLF2
HLA/HLB
HLAG/HLBG
HLC
HLD
HMF
HMF-G
HMFB
HFP
FH500
HBL
HJL
HMD
HDL
HJD
BHE

Gripping power performance data LSH-A**D / LSHL-A**D / LSHM-A**D (double acting)

· The gripping power indicates the thrust (for one finger) in the direction of the arrow shown in the figure.
· The gripping power operating in the opening/closing directions against the length (ℓ) of the attachment when the supply pressure is 0.7 MPa or less is shown.

● Open direction (⇦)
● Closed direction (➡)

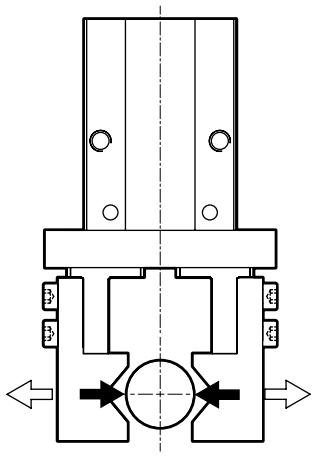

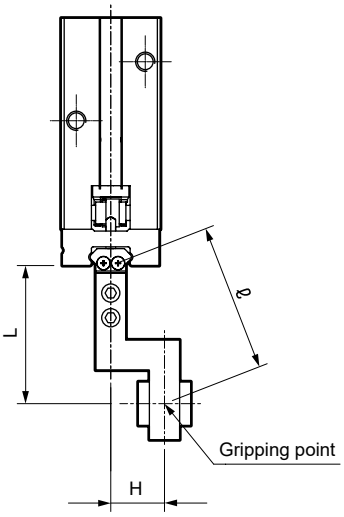

Closed direction

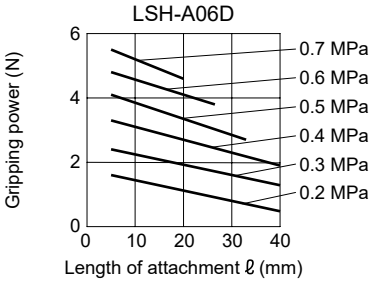

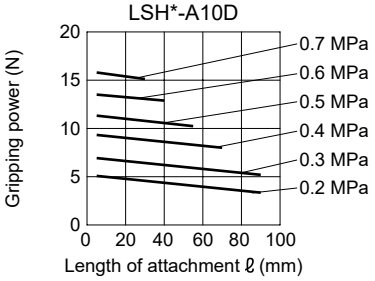

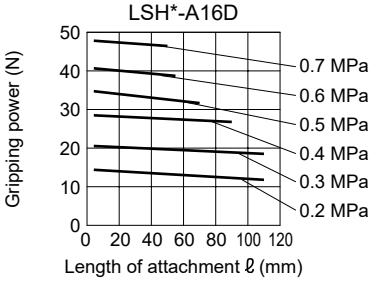

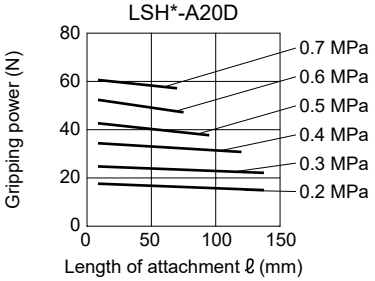

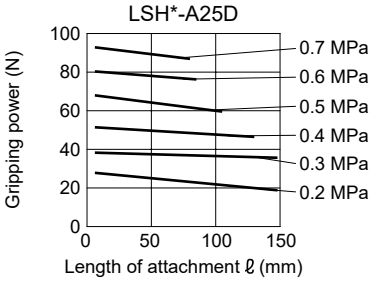

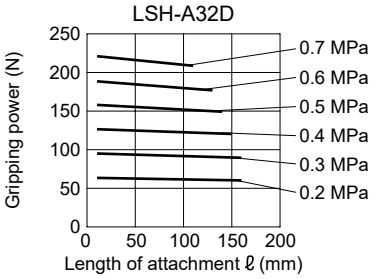

Open direction

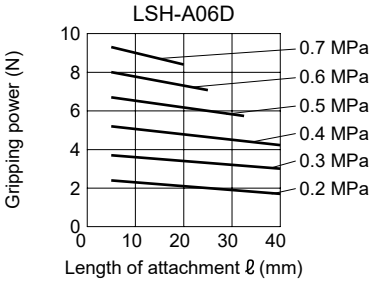

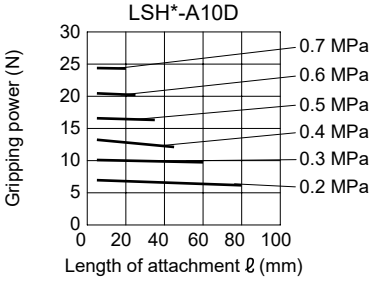

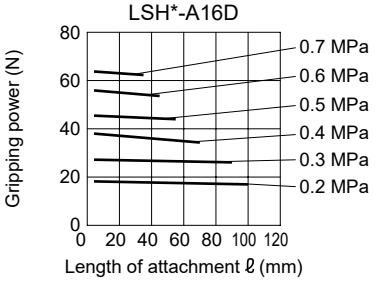

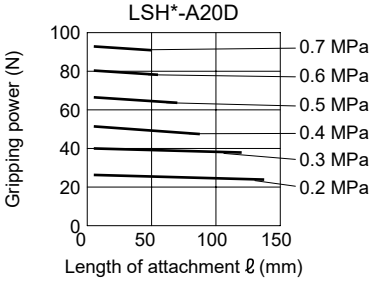

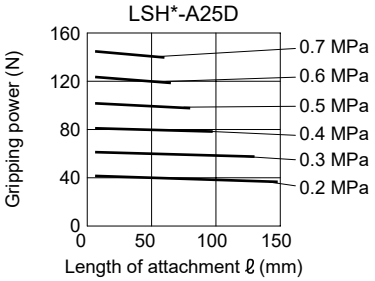

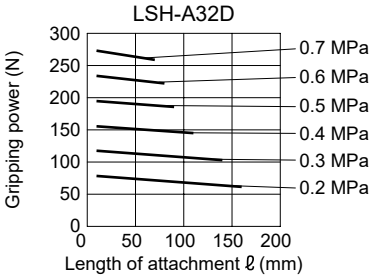

Gripping power performance data LSH-A**S / C (single acting)

· The gripping power indicates the thrust (for one finger) in the direction of the arrow shown in the figure.
· The gripping power operating in the opening/closing directions against the length (ℓ) of the attachment when the supply pressure is 0.7 MPa or less is shown.

● Open direction (⇦)
● Closed direction (➡)

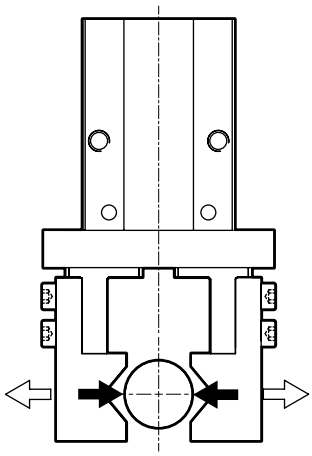

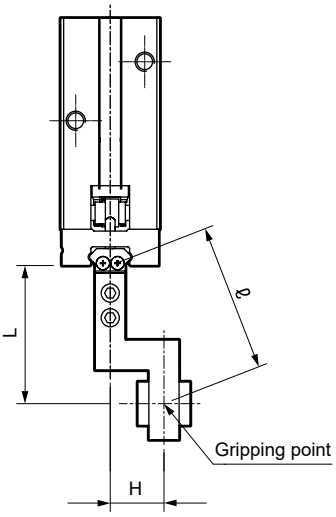

Closed direction

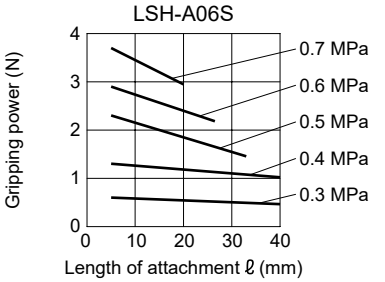

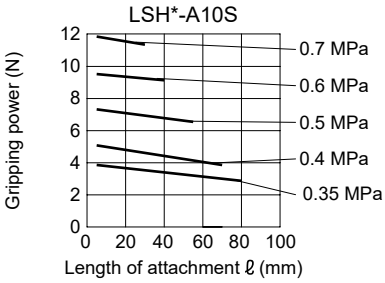

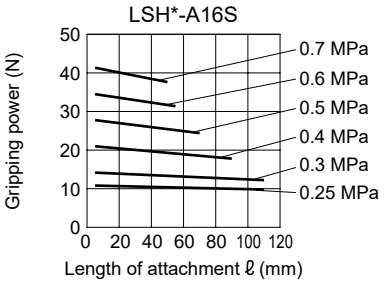

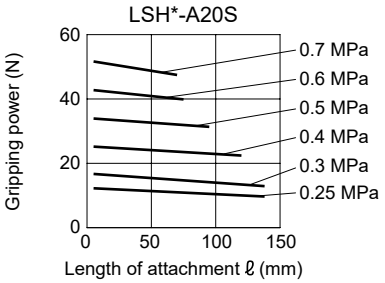

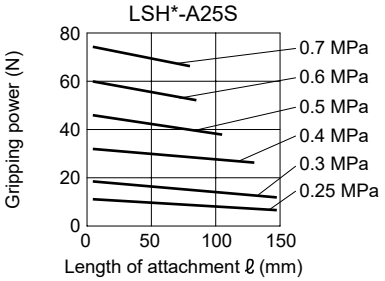

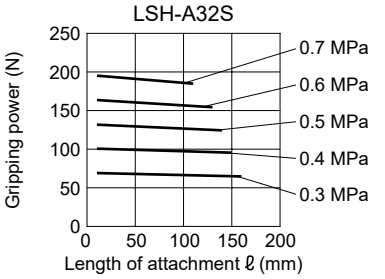

Open direction

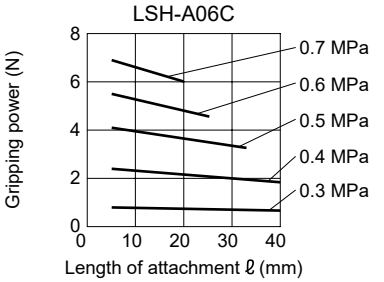

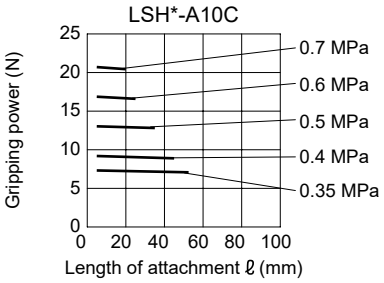

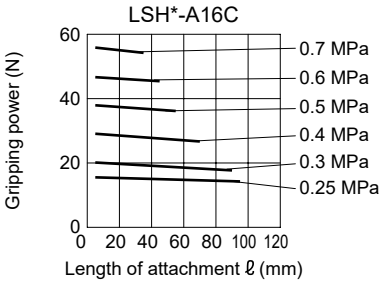

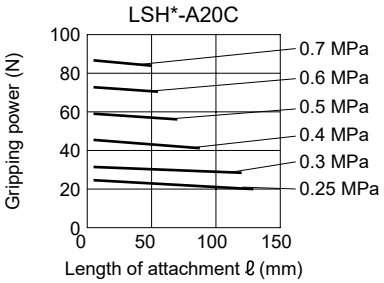

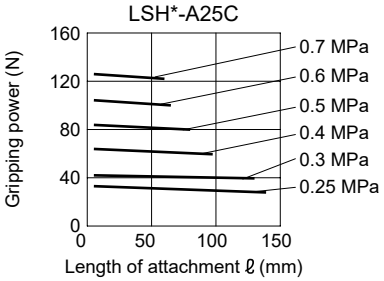

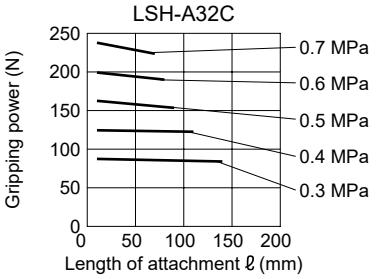

LCM
LCR
LCG
LCW
LCX
STM
STG
STS/STL
STR2
UCA2
ULK*
JSK/M2
JSG
JSC3/JSC4
USSD
UFCD
USC
UB
JSB3
LMB
LML
HCM
HCA
LBC
CAC4
UCAC2
CAC-N
UCAC-N
RCS2
RCC2
PCC
SHC
MCP
GLC
MFC
BBS
RRC
GRC
RV3*
NHS
HRL
LN
Hand
Chuk
MecHnd/Chuk
ShkAbs
FJ
FK
SpdContr
Ending
LSH-HP
LSH
FH100
BSA2
BHA/BHG
LHA
LHAG
HAP
HKP
HCP
HGP
HLF2
HLA/HLB
HLAG/HLBG
HLC
HLD
HMF
HMF-G
HMFB
HFP
FH500
HBL
HJL
HMD
HDL
HJD
BHE

Gripping power performance data LSH-G / F**D / LSHL-G / F**D / LSHM-G / F**D (double acting)

· The gripping power indicates the thrust (for one finger) in the direction of the arrow shown in the figure.
· The gripping power operating in the opening/closing directions against the length (ℓ) of the attachment when the supply pressure is 0.7 MPa or less is shown.

● Open direction (⇦)
● Closed direction (➡)

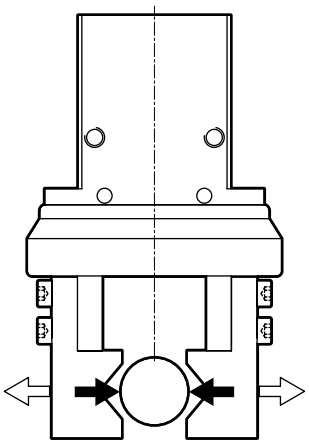

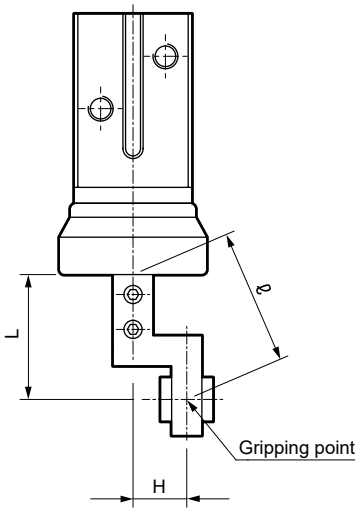

Closed direction

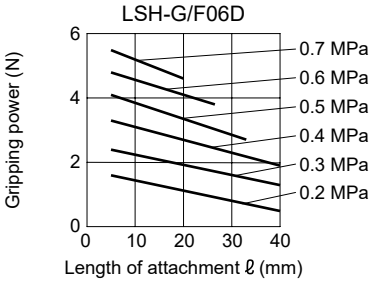

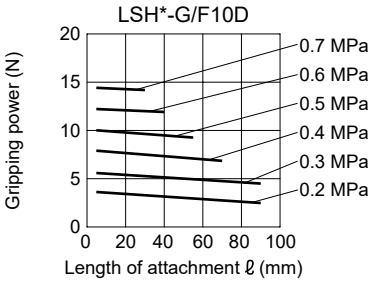

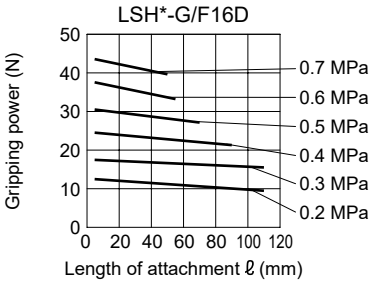

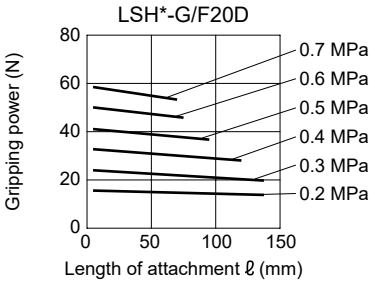

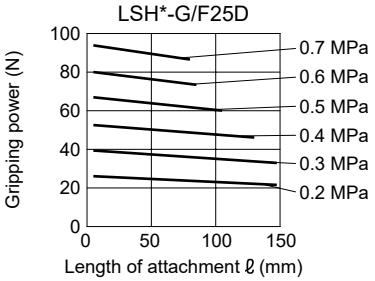

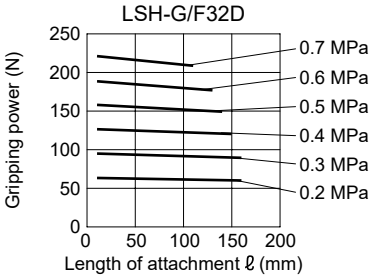

Open direction

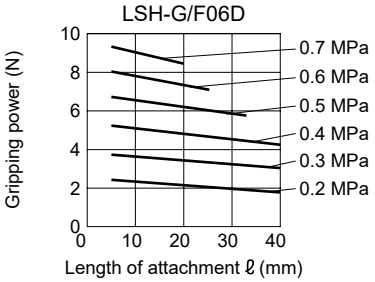

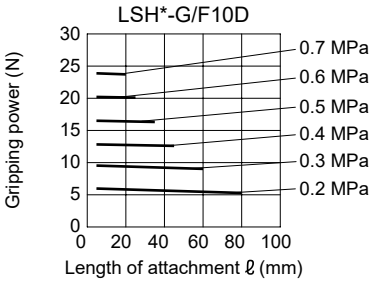

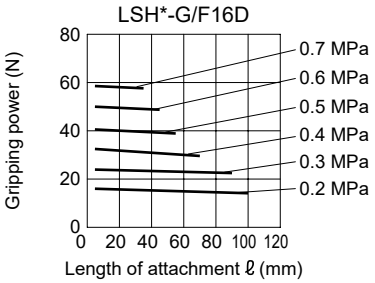

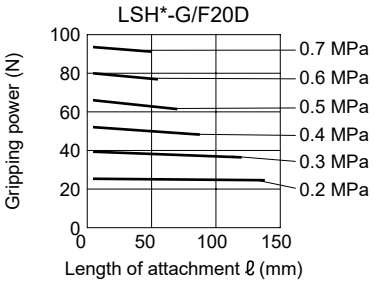

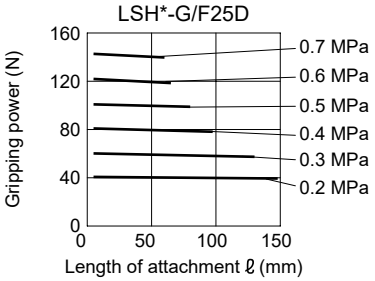

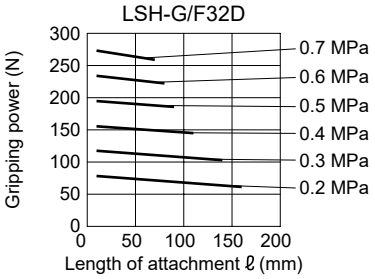

Gripping power performance data LSH-G / F**S / C (single acting)

· The gripping power indicates the thrust (for one finger) in the direction of the arrow shown in the figure.
· The gripping power operating in the opening/closing directions against the length (ℓ) of the attachment when the supply pressure is 0.7 MPa or less is shown.

● Open direction (⇦)
● Closed direction (➡)

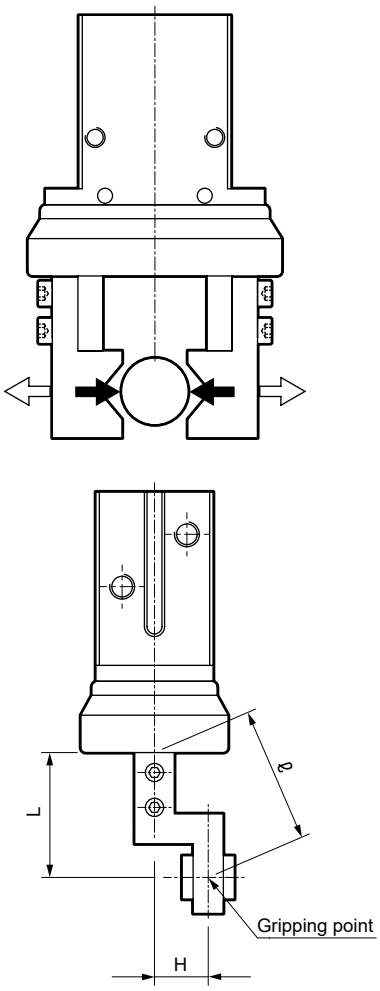

Closed direction

LSH-G06S/LSH-F06S

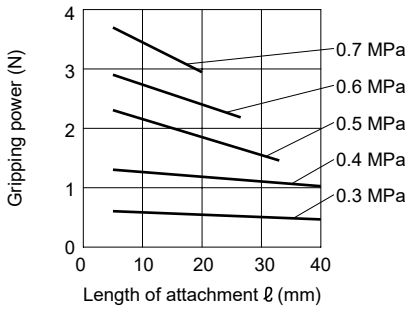

LSH-G10S/LSH-F10S

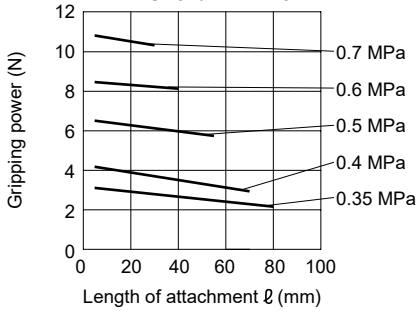

LSH-G16S/LSH-F16S

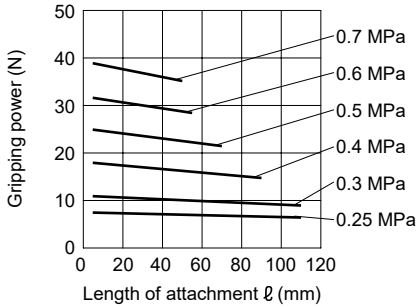

LSH-G20S/LSH-F20S

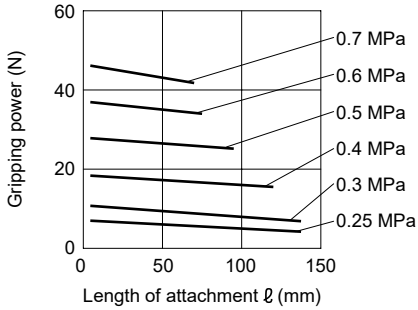

LSH-G25S/LSH-F25S

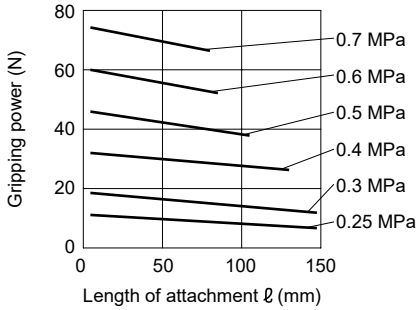

Open direction

LSH-G06C/LSH-F06C

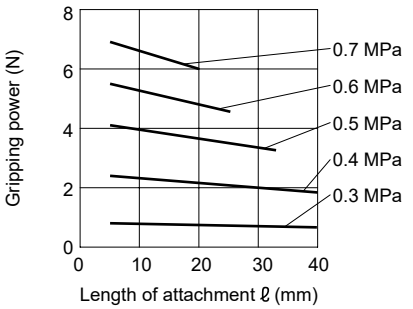

LSH-G10C/LSH-F10C

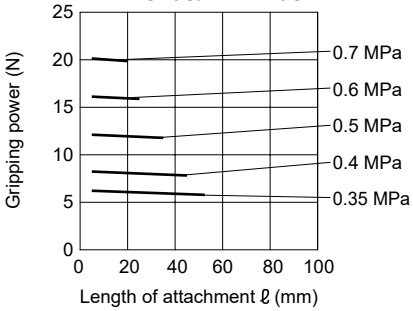

LSH-G16C/LSH-F16C

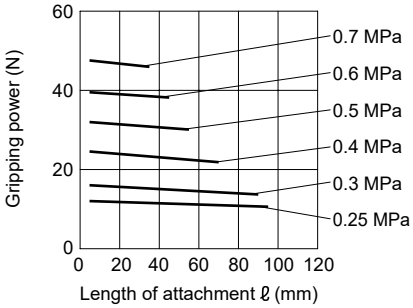

LSH-G20C/LSH-F20C

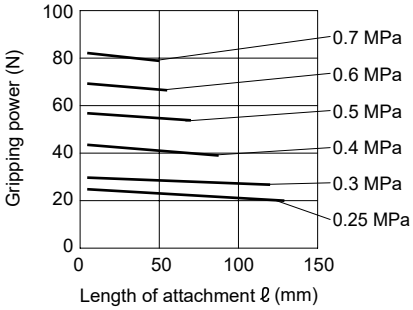

LSH-G25C/LSH-F25C

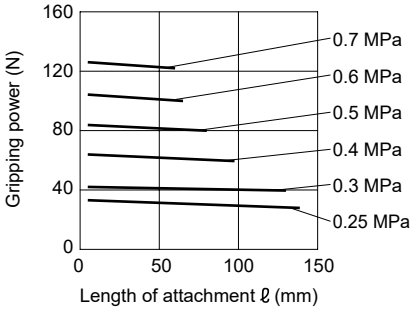

LCM
LCR
LCG
LCW
LCX
STM
STG
STS/STL
STR2
UCA2
ULK*
JSK/M2
JSG
JSC3/JSC4
USSD
UFCD
USC
UB
JSB3
LMB
LML
HCM
HCA
LBC
CAC4
UCAC2
CAC-N
UCAC-N
RCS2
RCC2
PCC
SHC
MCP
GLC
MFC
BBS
RRC
GRC
RV3*
NHS
HRL
LN
Hand
Chuk
MecHnd/Chuk
ShkAbs
FJ
FK
SpdContr
Ending
LSH-HP
LSH
FH100
BSA2
BHA/BHG
LHA
LHAG
HAP
HKP
HCP
HGP
HLF2
HLA/HLB
HLAG/HLBG
HLC
HLD
HMF
HMF-G
HMFB
HFP
FH500
HBL
HJL
HMD
HDL
HJD
BHE

Attachment length

When mounting an L-shaped attachment, use within the range given in the figure at right.

Closed direction

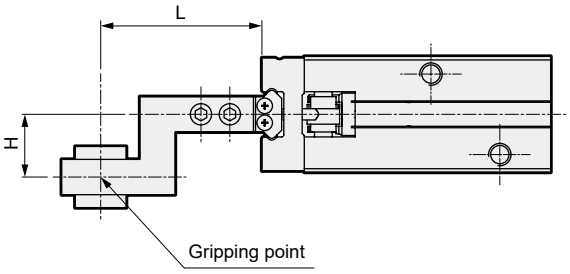

Open direction

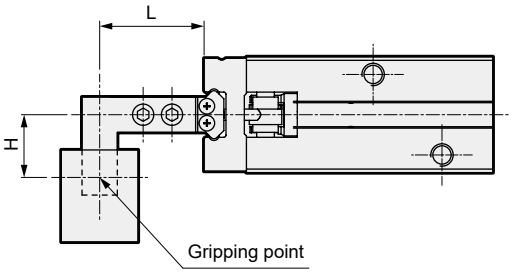

Closed direction

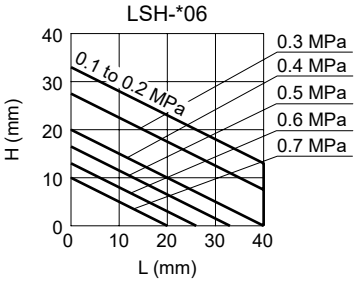

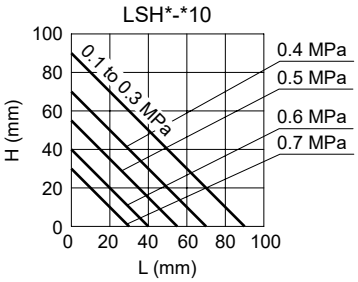

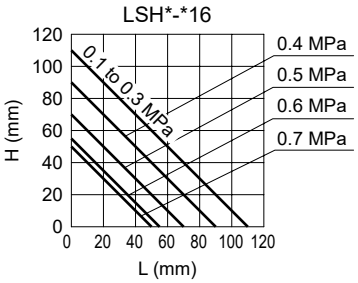

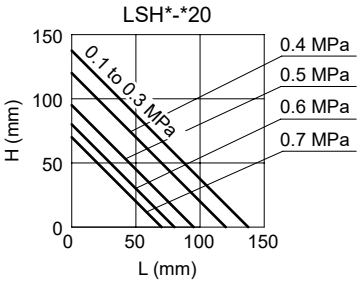

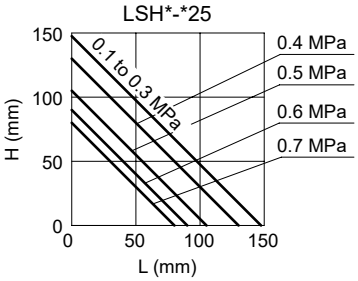

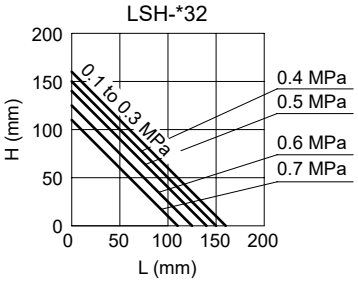

Open direction

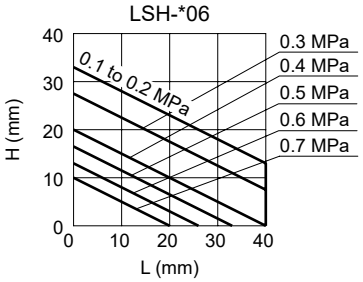

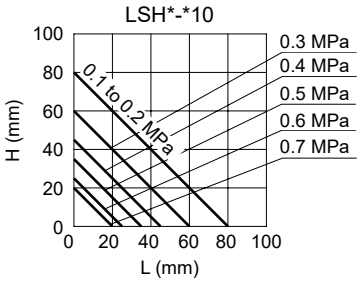

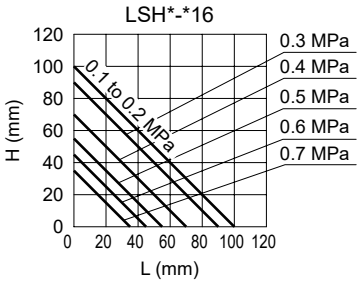

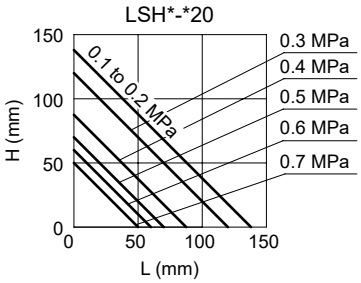

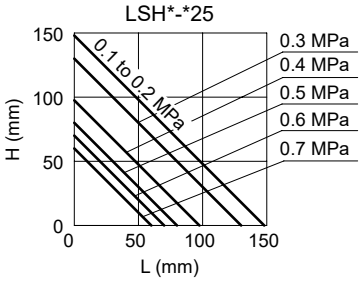

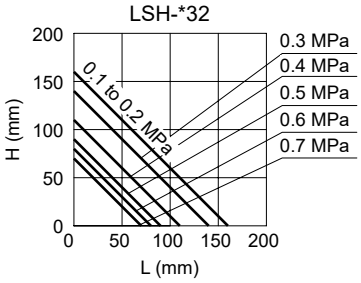

MEMO

LCM
LCR
LCG
LCW
LCX
STM
STG
STS/STL
STR2
UCA2
ULK*
JSK/M2
JSG
JSC3/JSC4
USSD
UFCD
USC
UB
JSB3
LMB
LML
HCM
HCA
LBC
CAC4
UCAC2
CAC-N
UCAC-N
RCS2
RCC2
PCC
SHC
MCP
GLC
MFC
BBS
RRC
GRC
RV3*
NHS
HRL
LN
Hand
Chuk
MecHnd/Chuk
ShkAbs
FJ
FK
SpdContr
Ending
LSH-HP
LSH
FH100
BSA2
BHA/BHG
LHA
LHAG
HAP
HKP
HCP
HGP
HLF2
HLA/HLB
HLAG/HLBG
HLC
HLD
HMF
HMF-G
HMFB
HFP
FH500
HBL
HJL
HMD
HDL
HJD
BHE

Cylinder switch precautions

● Switch mounting position list

<Side mounting>

ø6 to 20, 32

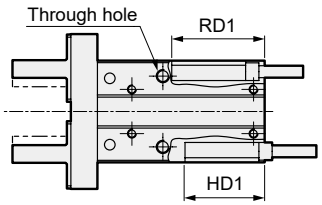

ø25

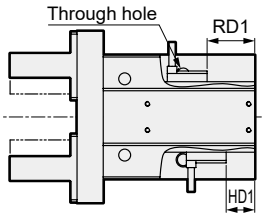

<Rail mounting>

ø6 to 32

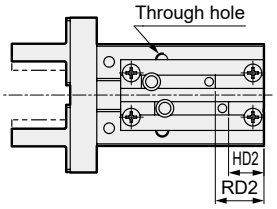

Model No.	Switch Model No.	Side mounting		Rail mounting	
		RD1	HD1	RD2	HD2
LSH-A06*	F2/3□	20.5	18	–	–
	F2/3S	–	–	9.5 (–)	7 (–)
LSH-A10*	F2/3□	21	18	11 (21)	8 (18)
	F2/3S	22	19	10 (22)	7 (19)
LSH-A16*	F2/3□	21	17	11 (21)	7 (17)
	F2/3S	22	18	10 (22)	6 (18)
LSH-A20*	F2/3□	26	20	16 (26)	10 (20)
	F2/3S	27	21	15 (27)	9 (21)
LSH-A25*	F2/3-PH	–	–	20 (30)	12 (22)
	F2/3V-PV	20	12	20 (30)	12 (22)
	F2/3S	19	11	19 (31)	11 (23)
LSH-A32D	F2/3□	32.5	20.5	22.5 (32.5)	10.5 (20.5)
	F2/3S	33.5	21.5	21.5 (33.5)	9.5 (21.5)
	T2/3□	–	–	18.5 (36.5)	6.5 (24.5)
LSH-A32S/C	F2/3□	41	29	31 (41)	19 (29)
	F2/3S	42	30	30 (42)	18 (30)
	T2/3□	–	–	27 (45)	15 (33)

*When the lead wire is directed toward the head side, the dimension in parentheses apply.
*"–" indicates it cannot be mounted.

● Precautions

Refer to precautions in the following table for the bore size to be used.

Category	Bore size ø6	ø10	ø16	ø20	ø25	ø32	precautions
Common items	●	●	●	●	●	●	*RD dimension is the max. sensitivity position at open side end position and HD dimension at closed side end position. The actual mounting position should be adjusted after confirming the operational status of the switch.
	●	●	●	●	●	●	*One switch can be mounted for one switch rail groove.
	●	●	●	●	●	●	*Since the opening and closing stroke is short, only one side of the open or closed state is detected for each switch. Ex: A single switch alone cannot detect what is shown in the following illustration. (1) Open (workpiece not gripped): switch OFF (2) Workpiece gripped: switch ON (3) Closed (workpiece not gripped): switch OFF 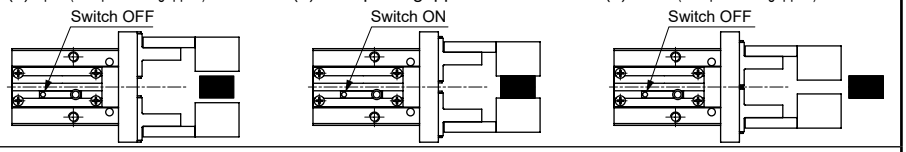
	●	●	●	●	●	●	*Be careful not to be caught in the lead wires when opening/closing the finger.
Side mounting	●	●	●	●			*When using the L type switch for side mounting on the side of the port, the fittings may interfere with the switch. Use fittings whose outer diameters are below those indicated in the following table. Mount position: port side Switch type: L-shaped type Bore size (mount position) / Fitting O.D. øD: ø6 (RD) – ø5 or less; ø6 (HD) – ø6.9 or less; ø10 – ø7.4 or less; ø16 – ø7.9 or less; ø20 – ø11 or less 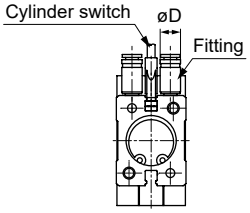
	●	●	●	●		●	*When using a lead wire straight F3PV switch, the switch and lead wire protrude from the end face of the head side. If this protrusion is a problem, use F2/3V or F2/3S, or mount a rail.
		●	●	●	●	●	*For switch side mounting, the through hole cannot be used.
Rail Mounting		●					*For switch rail mounting, the through hole cannot be used.

Cylinder switch precautions

● Switch mounting position list

<Side mounting>

ø6 to 20, 32

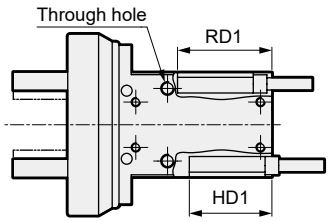

ø25

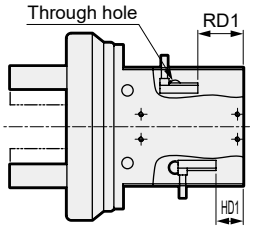

<Rail mounting>

ø6 to 32

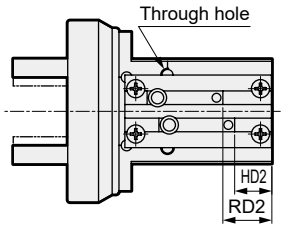

Model No.	Switch Model No.	Side mounting		Rail mounting	
		RD1	HD1	RD2	HD2
LSH-G/F06	F2/3□	20.5	18	–	–
	F2/3S	–	–	9.5 (–)	7 (–)
LSH-G/F10	F2/3□	21	18	11 (21)	8 (18)
	F2/3S	22	19	10 (22)	7 (19)
LSH-G/F16	F2/3□	21	17	11 (21)	7 (17)
	F2/3S	22	18	10 (22)	6 (18)
LSH-G/F20	F2/3□	26	20	16 (26)	10 (20)
	F2/3S	27	21	15 (27)	9 (21)
LSH-G/F25	F2/3□	–	–	20 (30)	12 (22)
	F2/3V	20	12	20 (30)	12 (22)
	F2/3S	19	11	19 (31)	11 (23)
LSH-G/F32	F2/3□	26	14	16 (26)	4 (14)
	F2/3S	27	15	15 (27)	3 (15)
	T2/3□	–	–	12 (30)	0 (18)

*When the lead wire is directed toward the head side, the dimension in parentheses apply.
*"–" indicates it cannot be mounted.

● Precautions

Refer to precautions in the following table for the bore size to be used.

Category	Bore size ø6	ø10	ø16	ø20	ø25	ø32	precautions
Common items	●	●	●	●	●	●	*RD dimension is the max. sensitivity position at open side end position and HD dimension at closed side end position. The actual mounting position should be adjusted after confirming the operational status of the switch.
	●	●	●	●	●	●	*One switch can be mounted for one switch rail groove.
	●	●	●	●	●	●	*Since the opening and closing stroke is short, only one side of the open or closed state is detected for each switch. Ex: A single switch alone cannot detect what is shown in the following illustration. (1) Open (workpiece not gripped): switch OFF (2) Workpiece gripped: switch ON (3) Closed (workpiece not gripped): switch OFF 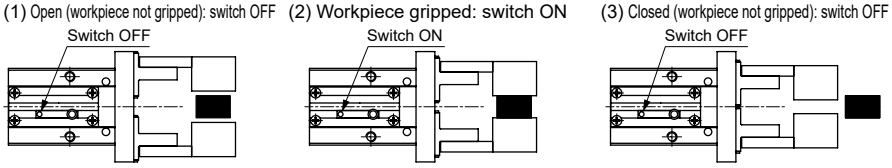
	●	●	●	●	●	●	*Be careful not to be caught in the lead wires when opening/closing the finger.
Side mounting	●	●	●	●			*When using the L type switch for side mounting on the side of the port, the fittings may interfere with the switch. Use fittings whose outer diameters are below those indicated in the following table. Mount position: port side Switch type: L-shaped type Bore size (mount position) / Fitting O.D. øD ø6 (RD) / ø5 or less ø6 (HD) / ø6.9 or less ø10 / ø7.4 or less ø16 / ø7.9 or less ø20 / ø11 or less 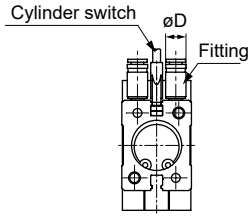
	●	●	●	●		●	*When using a lead wire straight F3PV switch, the switch and lead wire protrude from the end face of the head side. If this protrusion is a problem, use F2/3V or F2/3S, or mount a rail.
						●	*When using an F2/3V switch, this switch protrudes from the end face of the head side. If this protrusion is a problem, use F2/3S or mount a rail.
		●	●	●	●		*For switch side mounting, the through hole cannot be used.
Rail Mounting		●					*For switch rail mounting, the through hole cannot be used.

Cylinder switch precautions

● Switch mounting position list

<Side mounting>
ø10 to 25

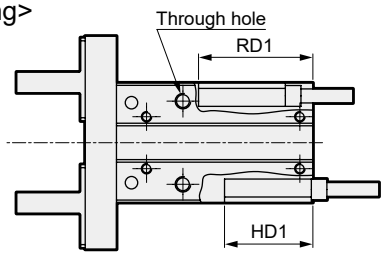

<Rail mounting>
ø10 to 25

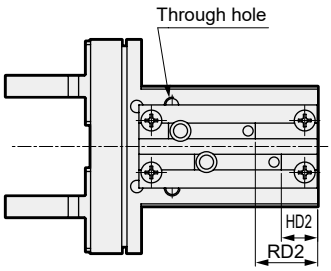

Model No.	Switch Model No.	Side mounting		Rail mounting	
		RD1	HD1	RD2	HD2
LSHL-A10D	F2/3□	22	17	12 (22)	7 (17)
	F2/3S	23	18	11 (23)	6 (18)
LSHL-A16D	F2/3□	24.5	16.5	14.5 (24.5)	6.5 (16.5)
	F2/3S	25.5	17.5	13.5 (25.5)	5.5 (17.5)
LSHL-A20D	F2/3□	30	20	20 (30)	10 (20)
	F2/3S	31	21	19 (31)	9 (21)
LSHL-A25D	F2/3□	33	21.5	23 (33)	11.5 (21.5)
	F2/3S	34	22.5	22 (34)	10.5 (22.5)
LSHL-A10S/C	F2/3□	28	23	18 (28)	13 (23)
	F2/3S	29	24	17 (29)	12 (24)
LSHL-A16S/C	F2/3□	27.5	20	17.5 (27.5)	10 (20)
	F2/3S	28.5	21	16.5 (28.5)	9 (21)
LSHL-A20S/C	F2/3□	33.5	23	23.5 (33.5)	13 (23)
	F2/3S	34.5	24	22.5 (34.5)	12 (24)
LSHL-A25S/C	F2/3□	38.5	27	28.5 (38.5)	17 (27)
	F2/3S	39.5	28	27.5 (39.5)	16 (28)

*When the lead wire is directed toward the head side, the dimension in parentheses apply.

● Precautions

Refer to precautions in the following table for the bore size to be used.

Cat-egory	Bore size ø10	ø16	ø20	ø25	precautions
Common items	●	●	●	●	*RD dimension is the max. sensitivity position at open side end position and HD dimension at closed side end position. The actual mounting position should be adjusted after confirming the operational status of the switch.
	●	●	●	●	*One switch can be mounted for one switch rail groove.
	●	●	●	●	*Since the opening and closing stroke is short, only one side of the open or closed state is detected for each switch. Ex: A single switch alone cannot detect what is shown in the following illustration. (1) Open (workpiece not gripped): switch OFF (2) Workpiece gripped: switch ON (3) Closed (workpiece not gripped): switch OFF 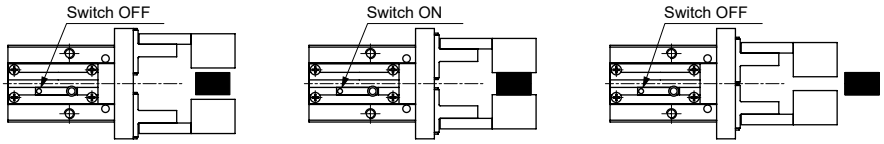
	●	●	●	●	*Be careful not to be caught in the lead wires when opening/closing the finger.
Side mounting	●	●	●		*When using the L type switch for side mounting on the side of the port, the fittings may interfere with the switch. Use fittings whose outer diameters are below those indicated in the following table. Mount position: port side Switch type: L-shaped type Bore size / Fitting O.D. øD ø10 / ø7.4 or less ø16 / ø7.9 or less ø20 / ø11 or less 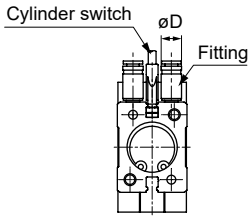
	●	●	●	●	*When using the lead wire straight switch, the switch and lead wire protrude from the end face of the head side. If this protrusion is a problem, use F2/3V or F2/3S, or mount a rail.
	●	●	●		*When using F3PV switch, the switch protrudes from the end face of the head side. If this protrusion is a problem, use F2/3V or F2/3S, or mount a rail.
	●	●	●	●	*For switch side mounting, the through hole cannot be used.
Rail Mounting	●				*For switch rail mounting, the through hole cannot be used.

Cylinder switch precautions

● Switch mounting position list

<Side mounting>
ø10 to 20

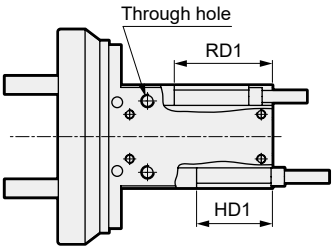

<Rail mounting>
ø10 to 20

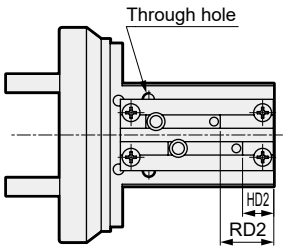

Model No.	Switch Model No.	Side mounting		Rail mounting	
		RD1	HD1	RD2	HD2
LSHL-G/F10	F2/3□	22	17	12 (22)	7 (17)
	F2/3S	23	18	11 (23)	6 (18)
LSHL-G/F16	F2/3□	25	17	15 (25)	7 (17)
	F2/3S	26	18	14 (26)	6 (18)
LSHL-G/F20	F2/3□	35.5	25.5	25.5 (35.5)	15.5 (25.5)
	F2/3S	36.5	26.5	24.5 (36.5)	14.4 (26.5)

*When the lead wire is directed toward the head side, the dimension in parentheses apply.

● Precautions

Refer to precautions in the following table for the bore size to be used.

Category	Bore size ø10	ø16	ø20	precautions
Common items	●	●	●	*RD dimension is the max. sensitivity position at open side end position and HD dimension at closed side end position. The actual mounting position should be adjusted after confirming the operational status of the switch.
	●	●	●	*One switch can be mounted for one switch rail groove.
	●	●	●	*Since the opening and closing stroke is short, only one side of the open or closed state is detected for each switch. Ex: A single switch alone cannot detect what is shown in the following illustration. (1) Open (workpiece not gripped): switch OFF (2) Workpiece gripped: switch ON (3) Closed (workpiece not gripped): switch OFF 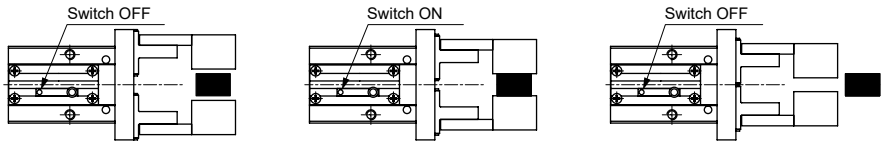
	●	●	●	*Be careful not to be caught in the lead wires when opening/closing the finger.
Side mounting	●	●	●	*When using the L type switch for side mounting on the side of the port, the fittings may interfere with the switch. Use fittings whose outer diameters are below those indicated in the following table. Mount position: port side Switch type: L-shaped type Bore size / Fitting O.D. øD ø10 / ø7.4 or less ø16 / ø7.9 or less ø20 / ø11 or less 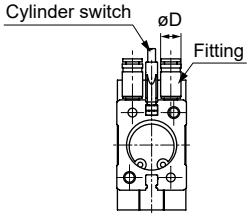
	●	●	●	*When using the lead wire straight switch, the switch and lead wire protrude from the end face of the head side. If this protrusion is a problem, use F2/3V or F2/3S, or mount a rail.
	●	●		*When using F3PV switch, the switch protrudes from the end face of the head side. If this protrusion is a problem, use F2/3V or F2/3S, or mount a rail.
	●	●	●	*For switch side mounting, the through hole cannot be used.
Rail Mounting	●			*For switch rail mounting, the through hole cannot be used.

LCM
LCR
LCG
LCW
LCX
STM
STG
STS/STL
STR2
UCA2
ULK*
JSK/M2
JSG
JSC3/JSC4
USSD
UFCD
USC
UB
JSB3
LMB
LML
HCM
HCA
LBC
CAC4
UCAC2
CAC-N
UCAC-N
RCS2
RCC2
PCC
SHC
MCP
GLC
MFC
BBS
RRC
GRC
RV3*
NHS
HRL
LN
Hand
Chuk
MecHnd/Chuk
ShkAbs
FJ
FK
SpdContr
Ending
LSH-HP
LSH
FH100
BSA2
BHA/BHG
LHA
LHAG
HAP
HKP
HCP
HGP
HLF2
HLA/HLB
HLAG/HLBG
HLC
HLD
HMF
HMF-G
HMFB
HFP
FH500
HBL
HJL
HMD
HDL
HJD
BHE

Are your workpieces being damaged?

The shockless type grips the workpiece gently even at high speeds.

Shock absorbing mechanism integrated

Suppresses impact to approximately 1/30

Unique shock absorbing mechanism (option)

Workpiece is damaged due to impact from the slide hand.

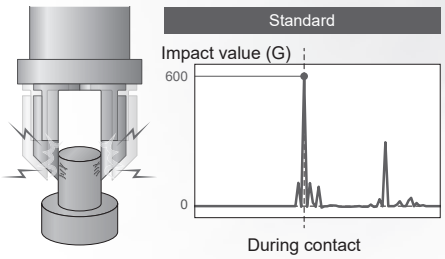

Grips the workpiece gently even at high speeds.

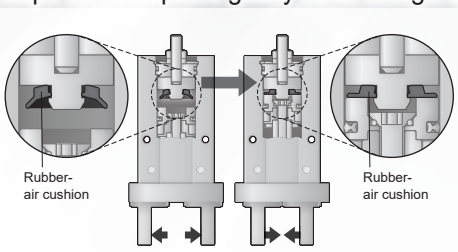

* Can be adjusted according to stroke length.

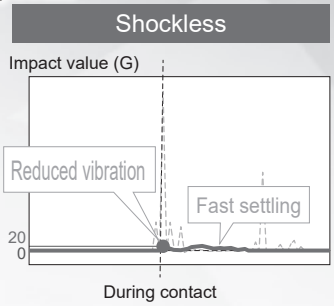

High rigidity/high precision

Linear guide used

High rigidity and high precision are achieved with a structure integrating the guide rail and finger.

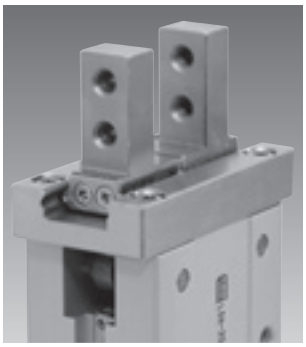

Increased flexibility in design

Can be mounted from three directions

Axial (upward) mounting	Horizontal mounting	Vertical mounting
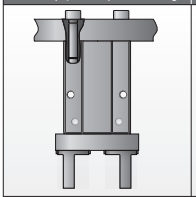	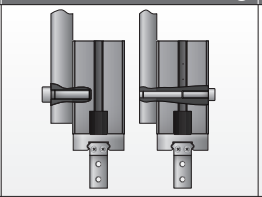	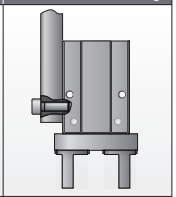
With reference spigot	Body thickness tolerance ±0.05 mm	Excellent centering precision

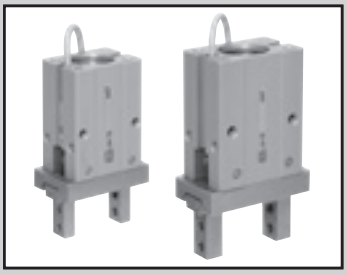

Linear Slide Hand Double acting

LSH Series

● Operating stroke: 4, 6, 10, 14 mm

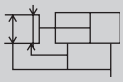

RoHS

Specifications

Descriptions		LSH			
Bore size mm		ø10	ø16	ø20	ø25
Actuation		Double acting			
Working fluid		Compressed air			
Max. working pressure MPa		0.7			
Min. working pressure MPa	Standard	0.2	0.1		
	Shockless	0.3	0.2		
Port size		M3	M5		
Ambient temperature °C		-10 to 60 (no freezing)			
Operating stroke mm		4	6	10	14
Repeatability mm		±0.01			
Weight kg	Standard	0.055	0.125	0.250	0.460
	Shockless	0.063	0.143	0.278	0.502
Lubrication		Not required (use turbine oil class 1 ISO VG32 if lubrication is necessary)			

Gripping force

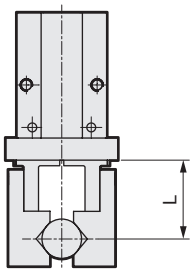

Unit: N

Bore size (mm)	Open side	Closed side
ø10	17	11
ø16	45	34
ø20	66	42
ø25	104	65

* Values at 0.5 MPa supply pressure, L = 20 mm

Switch specifications

Item	Proximity 2-wire	Proximity 3-wire	Proximity 2-wire	Proximity 3-wire	
	F2S	F3S	F2H/F2V	F3H/F3V	F3PH/F3PV
Applications	Programmable Controller dedicated	Programmable For controller, relay	Programmable Controller dedicated	Programmable For controller, relay	
Output method	-	NPN output	-	NPN output	PNP output
Power supply voltage	-	10 to 28 VDC	-	10 to 28 VDC	4.5 to 28 VDC
Load voltage/ current	10 to 30 VDC 5 to 20mA	30 VDC, 50 mA or less	10 to 30 VDC 5 to 20mA	30 VDC, 50 mA or less	
Indicator lamp	LED (Lit when ON)		Yellow LED (Lit when ON)		
Leakage current	1 mA or less	10 μA or less	1 mA or less	10 μA or less	
Shock resistance	980m/s²				
Weight g	1m:10 3m:29				

*1 : The switch uses a bend-resistant lead wire.

How to order

Without switch

LSH - 16 ———— ○

With switch

LSH - 16 - F2H - D - ○

Ⓐ Bore size
Ⓑ Switch model No.
Ⓒ Switch quantity
Ⓓ Option

Code	Description
Ⓐ Bore size (mm)	
10	ø10
16	ø16
20	ø20
25	ø25

Ⓑ Switch model No.

Straight Lead wire	L-shaped Lead wire	Contact	Voltage AC	Voltage DC	Indicator	Lead wire
-	F2S*	Proximity		●	1-color LED	2-wire
-	F3S*			●		3-wire
F2H*	F2V*			●		2-wire
F3H*	F3V*			●		3-wire
F3PH*	F3PV*			●		3-wire

* Lead wire length	
Blank	1 m (standard)
3	3 m (option)

Ⓒ Switch quantity	
R	1 on open side
H	1 on closed side
D	2

Ⓓ Option	
Blank	Standard
C	Shockless (closed side only)

Precautions for model No. selection

*1: Shock absorbing option is enabled only for the closed side.

[Example of model No.]

LSH-16-F2H-D

Model: Linear Slide Hand
Ⓐ Bore size : ø16
Ⓑ Switch model No. : Proximity switch F2H
Lead wire 1 m
Ⓒ Switch quantity : 2

How to order switch

SW - F2H → Switch model No. (Item Ⓑ above)

LSH-20, 25 Long nut for switch

LSH -SW-L-NUT

Internal structure diagram and parts list

●LSH (Standard)

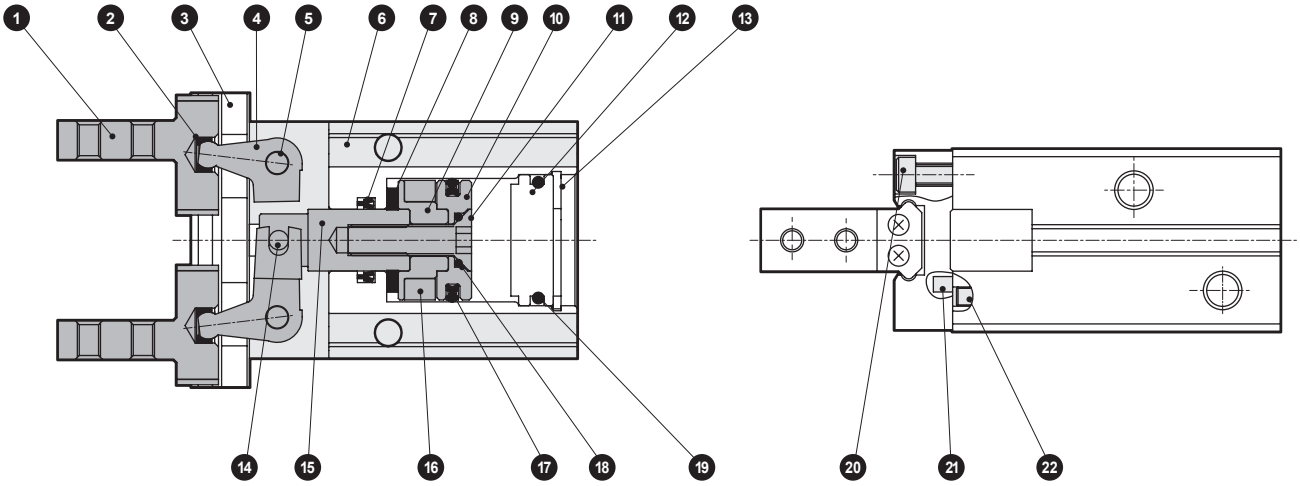

●LSH-*-C (Shockless (Closed side only))

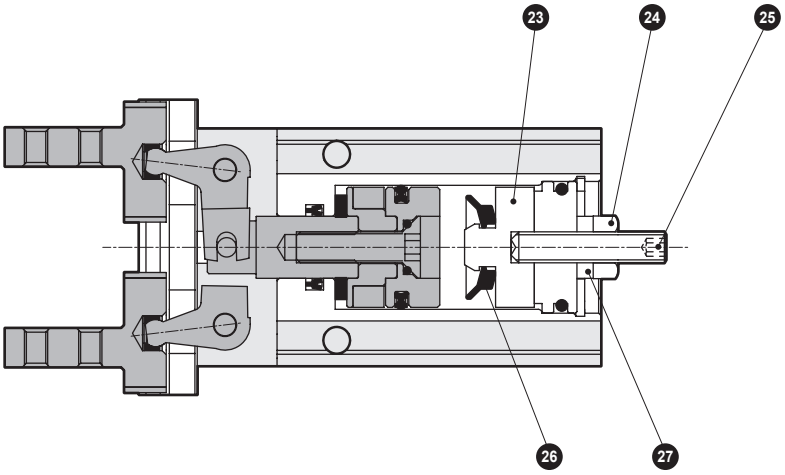

Cannot be disassembled

Parts list

Part No.	Part name	Material	Remarks	Part No.	Part name	Material	Remarks
1	Finger	Stainless steel		15	Piston rod	Stainless steel	
2	Holder	Steel alloy		16	Magnet		
3	Linear guide	Stainless steel		17	Piston packing	Nitrile rubber	
4	Lever	Stainless steel		18	O-ring	Nitrile rubber	
5	Fulcrum axis	Steel alloy		19	O-ring	Nitrile rubber	
6	Body	Aluminum alloy		20	Hexagon socket head cap screw	Stainless steel	
7	Rod packing	Nitrile rubber		21	Pin	Steel alloy	
8	Cushion rubber	Urethane rubber		22	Hexagon socket set screw	Steel alloy	
9	Spacer	Aluminum alloy		23	Stopper	Aluminum alloy	Hard alumite
10	Piston	Aluminum alloy		24	Hexagon nut	Steel alloy	
11	Hexagon socket head cap screw	Stainless steel		25	Hexagon socket set screw	Steel alloy	
12	Head cover	Aluminum alloy		26	Rubber-air cushion	Special rubber	
13	C-snap ring	Stainless steel		27	Sealing washer	Stainless steel + nitrile rubber	
14	Operation shaft	Steel alloy					

Dimensions (bore size: ø10, ø16)

●LSH-10 (Standard)

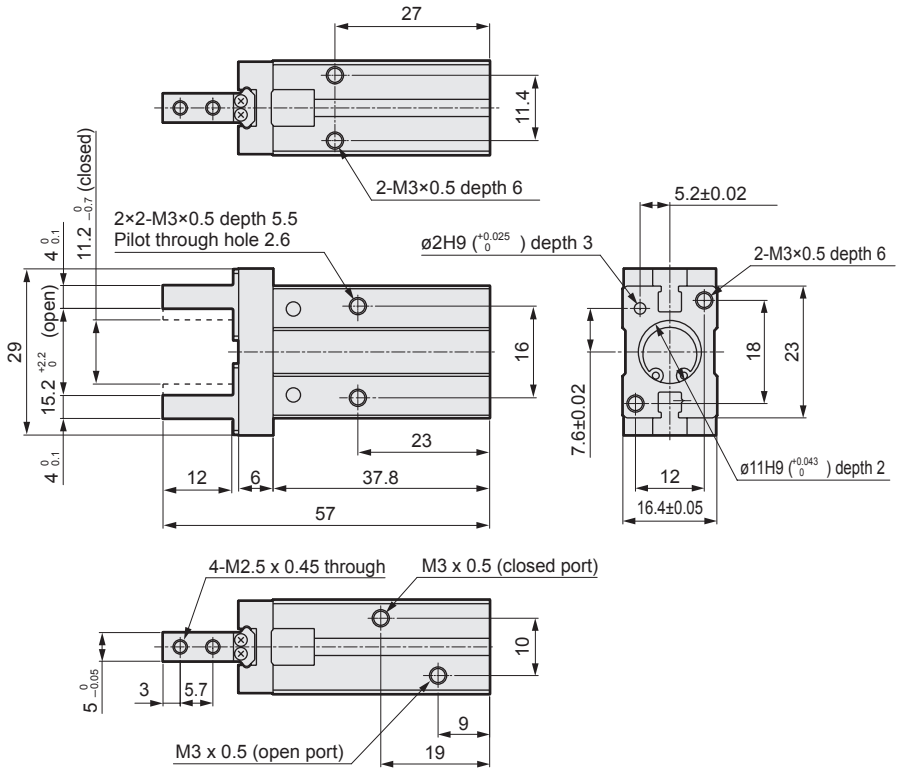

●With switch

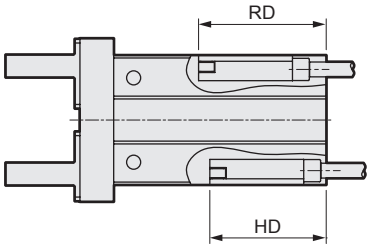

F2/3*	RD	22.5
	HD	20.5
F2S/F3S	RD	23.5
	HD	21.5

*1: RD dimension is the max. sensitivity position at open side end position and HD dimension at closed side end position. The actual mounting position should be adjusted after confirming the operational status of the switch.
*2: Switch cannot be mounted when mounting the body with through holes. Refer to page 1768 for details.
*3: For F□H, the switch lead wire projects from the end face of the head side. If this projection is a problem, use F□V or F□S.

●LSH-16 (Standard)

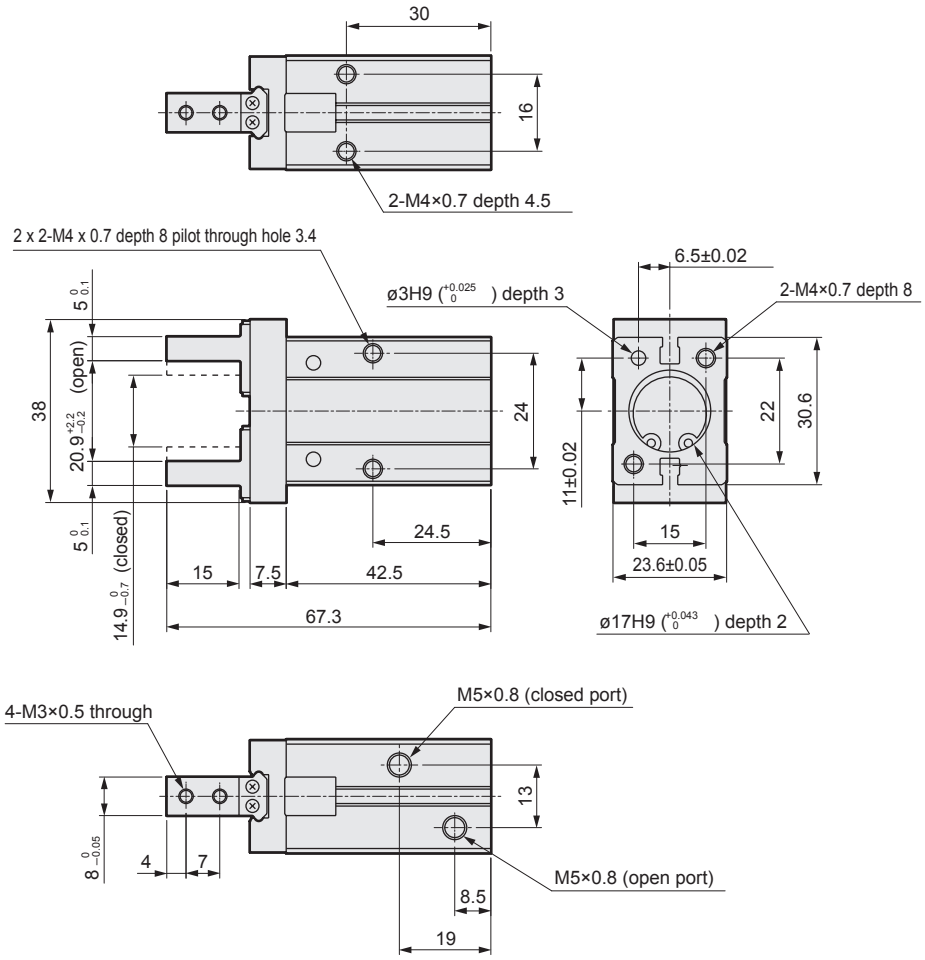

●With switch

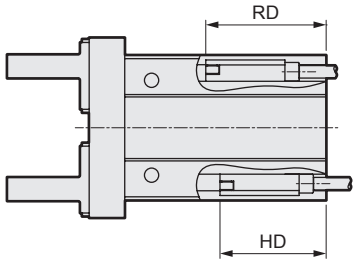

F2/3*	RD	25.5
	HD	22.5
F2S/F3S	RD	26.5
	HD	23.5

*1: RD dimension is the max. sensitivity position at open side end position and HD dimension at closed side end position. The actual mounting position should be adjusted after confirming the operational status of the switch.
*2: Switch cannot be mounted when mounting the body with through holes. Refer to page 1768 for details.
*3: For F□H, the switch lead wire projects from the end face of the head side. If this projection is a problem, use F□V or F□S.

LCM
LCR
LCG
LCW
LCX
STM
STG
STS/STL
STR2
UCA2
ULK*
JSK/M2
JSG
JSC3/JSC4
USSD
UFCD
USC
UB
JSB3
LMB
LML
HCM
HCA
LBC
CAC4
UCAC2
CAC-N
UCAC-N
RCS2
RCC2
PCC
SHC
MCP
GLC
MFC
BBS
RRC
GRC
RV3*
NHS
HRL
LN
Hand
Chuk
MecHnd/Chuk
ShkAbs
FJ
FK
SpdContr
Ending
LSH-HP
LSH
FH100
BSA2
BHA/BHG
LHA
LHAG
HAP
HKP
HCP
HGP
HLF2
HLA/HLB
HLAG/HLBG
HLC
HLD
HMF
HMF-G
HMFB
HFP
FH500
HBL
HJL
HMD
HDL
HJD
BHE

Dimensions (bore size: ø20, ø25)

●LSH-20 (Standard)

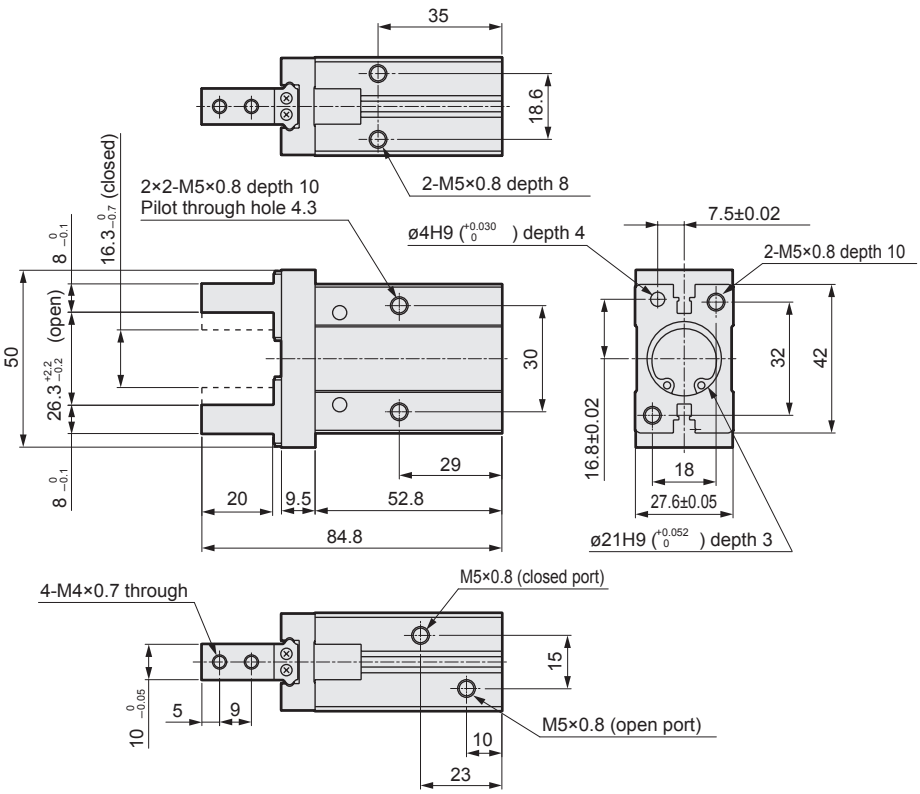

●With F2H/F3H, F2V/F3V switches

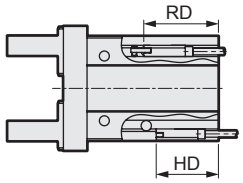

●With F2S/F3S switch

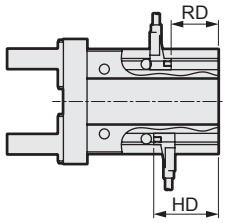

F2/3*	RD	30
	HD	25
F2S/F3S	RD	19
	HD	26

*1: RD dimension is the max. sensitivity position at open side end position and HD dimension at closed side end position. The actual mounting position should be adjusted after confirming the operational status of the switch.
*2: Switch cannot be mounted when mounting the body with through holes. Refer to page 1768 for details.
*3: For F□H, the switch lead wire projects from the end face of the head side. If this projection is a problem, use F□V or F□S.
*4: When installing the F2/3H or F2/3V switch in a position with RD dimensions 27.5 to 30, replace the switch fixing nut with the attached long nut according to the switch mounting procedure included with the product.

●LSH-25 (Standard)

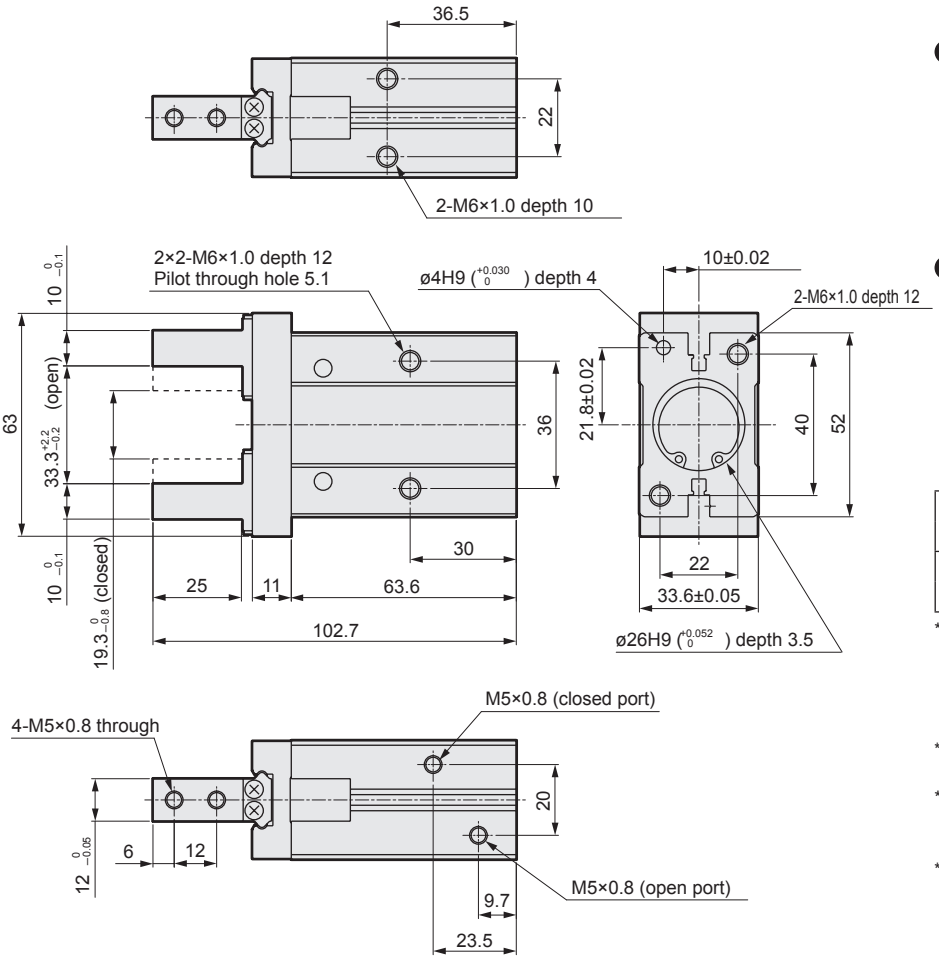

●With F2H/F3H, F2V/F3V switches

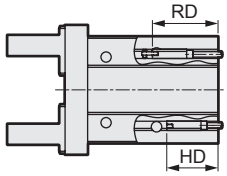

●With F2S/F3S switch

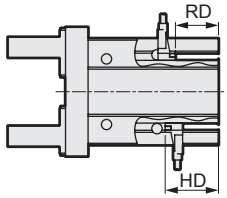

F2/3*	RD	32
	HD	25
F2S/F3S	RD	21
	HD	26

*1: RD dimension is the max. sensitivity position at open side end position and HD dimension at closed side end position. The actual mounting position should be adjusted after confirming the operational status of the switch.
*2 : Switch cannot be mounted when mounting the body with through holes. Refer to page 1768 for details.
*3:For F□H, the switch lead wire projects from the end face of the head side. If this projection is a problem, use F□V or F□S.
*4: When mounting the F2/3H or F2/3V switch to RD dimensions 29 to 33, replace the switch fixing nut with the attached long nut according to the switch mounting procedure included with the product.

Dimensions (bore size: ø10, ø16)

●LSH-10-C (Shockless (closed side only))

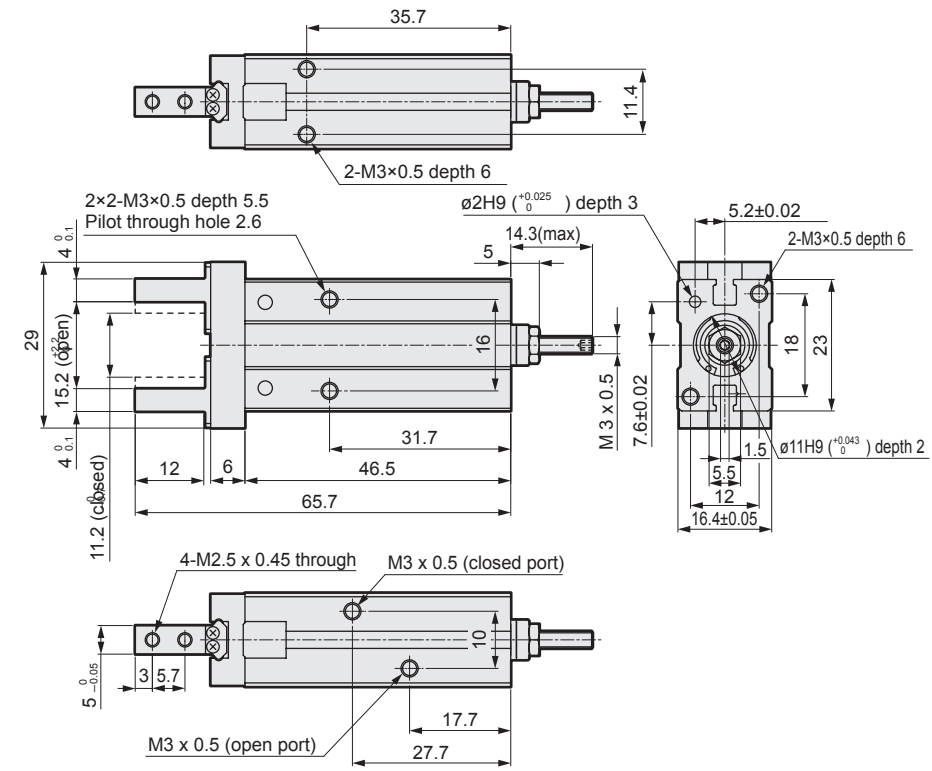

●With switch

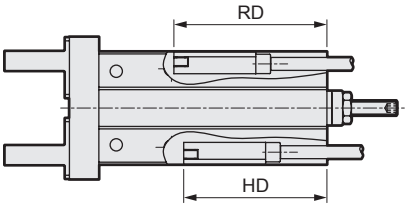

F2/3*	RD	31
	HD	29
F2S/F3S	RD	32
	HD	30

*1: RD dimension is the max. sensitivity position at open side end position and HD dimension at closed side end position. The actual mounting position should be adjusted after confirming the operational status of the switch.
*2: Switch cannot be mounted when mounting the body with through holes. For details, refer to page 1768.
*3: For F□H, the switch lead wire projects from the end face of the head side. If this projection is a problem, use F□V or F□S.

●LSH-16-C (Shockless (closed side only))

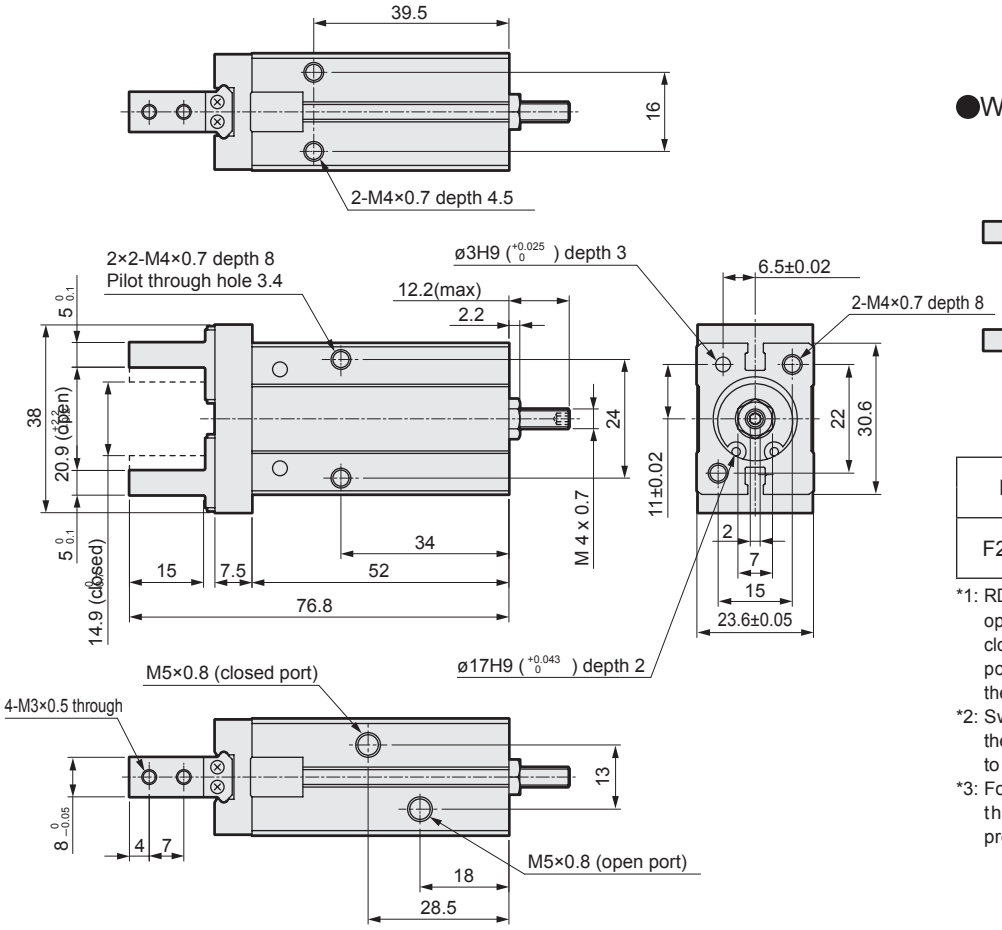

●With switch

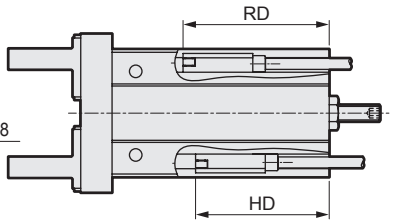

F2/3*	RD	35
	HD	32
F2S/F3S	RD	36
	HD	33

*1: RD dimension is the max. sensitivity position at open side end position and HD dimension at closed side end position. The actual mounting position should be adjusted after confirming the operational status of the switch.
*2: Switch cannot be mounted when mounting the body with through holes. For details, refer to page 1768.
*3: For F□H, the switch lead wire projects from the end face of the head side. If this projection is a problem, use F□V or F□S.

LCM
LCR
LCG
LCW
LCX
STM
STG
STS/STL
STR2
UCA2
ULK*
JSK/M2
JSG
JSC3/JSC4
USSD
UFCD
USC
UB
JSB3
LMB
LML
HCM
HCA
LBC
CAC4
UCAC2
CAC-N
UCAC-N
RCS2
RCC2
PCC
SHC
MCP
GLC
MFC
BBS
RRC
GRC
RV3*
NHS
HRL
LN
Hand
Chuk
MecHnd/Chuk
ShkAbs
FJ
FK
SpdContr
Ending
LSH-HP
LSH
FH100
BSA2
BHA/BHG
LHA
LHAG
HAP
HKP
HCP
HGP
HLF2
HLA/HLB
HLAG/HLBG
HLC
HLD
HMF
HMF-G
HMFB
HFP
FH500
HBL
HJL
HMD
HDL
HJD
BHE

Dimensions (bore size: ø20, ø25)

●LSH-20-C (Shockless (closed side only))

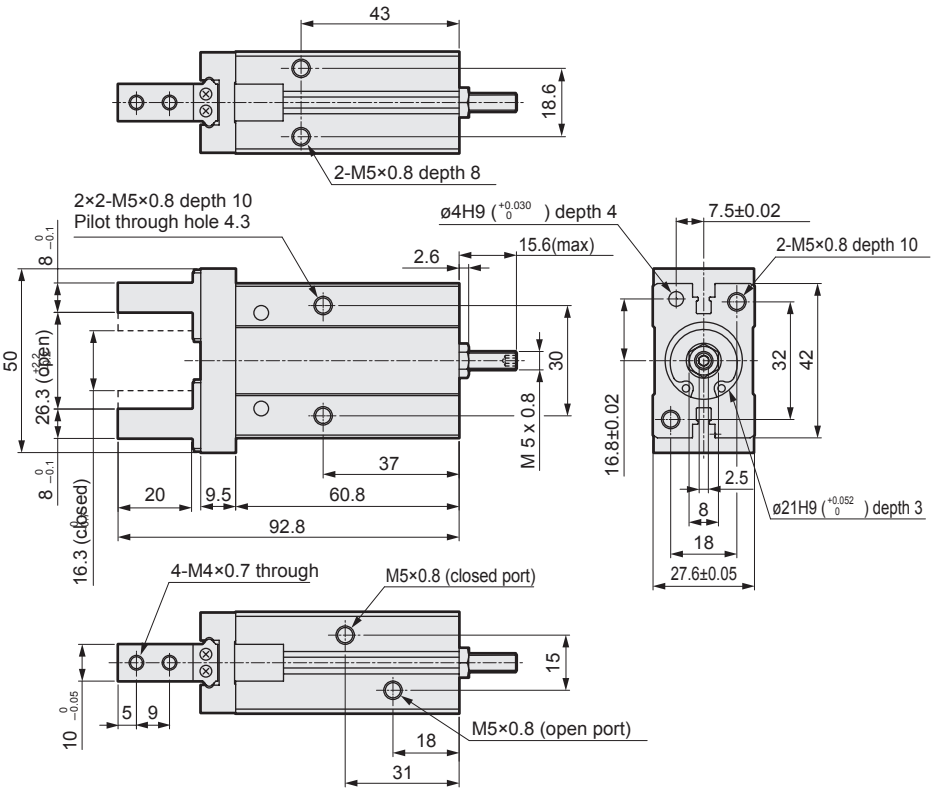

●With F2H/F3H, F2V/F3V switches

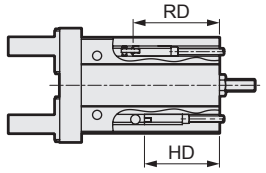

●With F2S/F3S switch

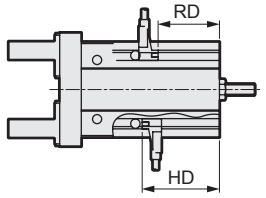

F2/3*	RD	38
	HD	33
F2S/F3S	RD	27
	HD	34

*1: RD dimension is the max. sensitivity position at open side end position and HD dimension at closed side end position. The actual mounting position should be adjusted after confirming the operational status of the switch.
*2: Switch cannot be mounted when mounting the body with through holes. For details, refer to page 1768.
*3:For F□H, the switch lead wire projects from the end face of the head side. If this projection is a problem, use F□V or F□S.
*4: When installing the F2/3H or F2/3V switch in a position with RD dimensions 35.5 to 38, replace the switch fixing nut with the attached long nut according to the switch mounting procedure included with the product.

●LSH-25-C (Shockless (closed side only))

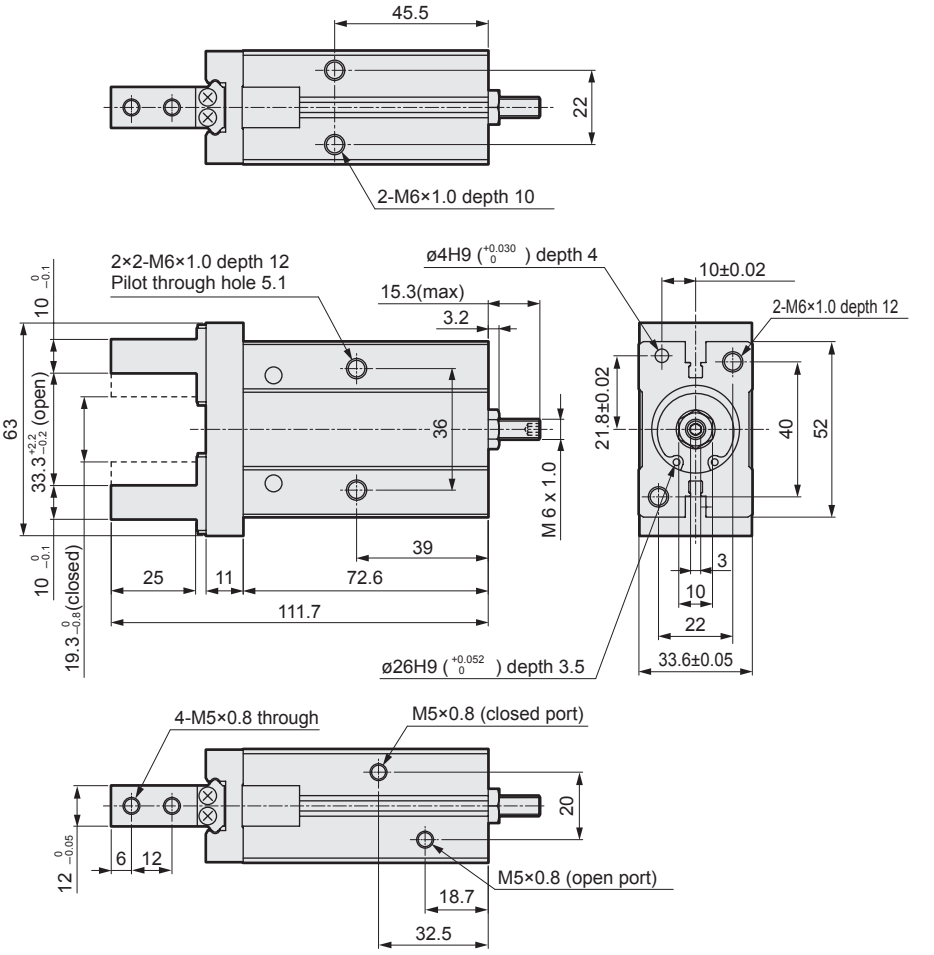

●With F2H/F3H, F2V/F3V switches

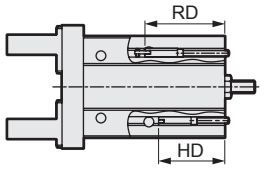

●With F2S/F3S switch

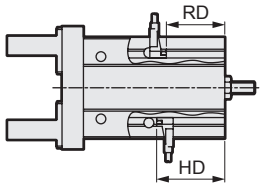

F2/3*	RD	41
	HD	34
F2S/F3S	RD	30
	HD	35

*1: RD dimension is the max. sensitivity position at open side end position and HD dimension at closed side end position. The actual mounting position should be adjusted after confirming the operational status of the switch.
*2: Switch cannot be mounted when mounting the body with through holes. For details, refer to page 1768.
*3: For F□H, the switch lead wire projects from the end face of the head side. If this projection is a problem, use F□V or F□S.
*4: When mounting the F2/3H or F2/3V switch to RD dimensions 38 to 42, replace the switch fixing nut with the attached long nut according to the switch mounting procedure included with the product.

Gripping force performance data

- Gripping force represents the thrust (per finger) in the arrow direction shown in the figure.
- The gripping force in the opening/closing directions with finger length ℓ with a supply pressure of 0.2 to 0.7 MPa is shown.

● Open direction (⇦)
● Closed direction (➡)

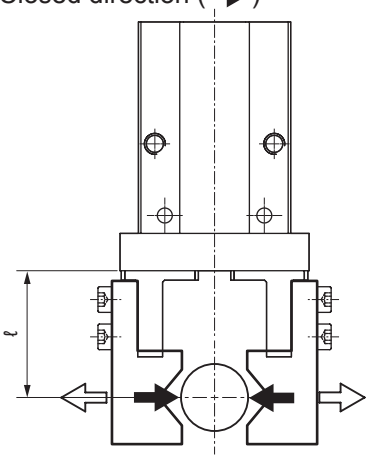

(Note) When making a selection, read the precautions for design and selection on page 1764.

Closed direction

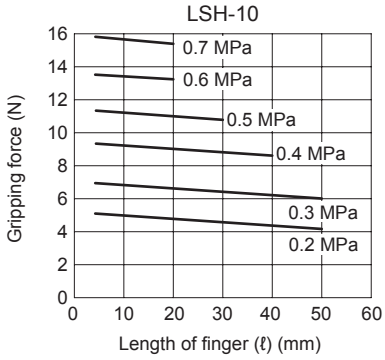

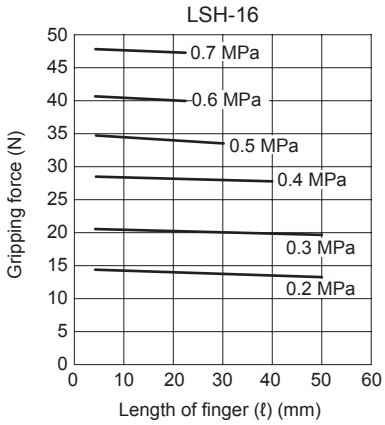

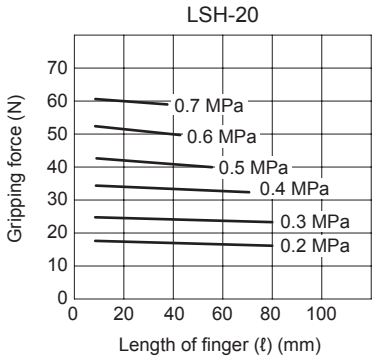

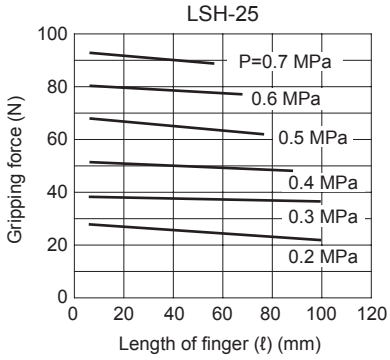

Open direction

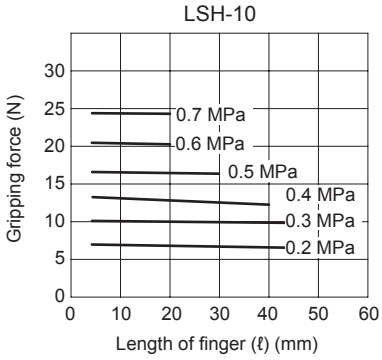

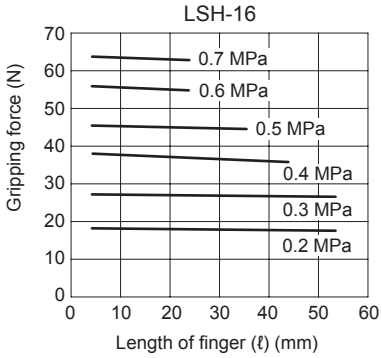

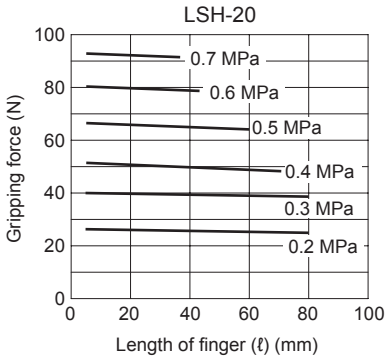

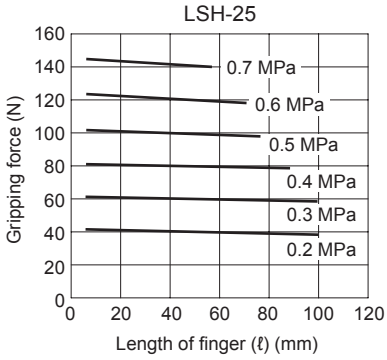

LCM
LCR
LCG
LCW
LCX
STM
STG
STS/STL
STR2
UCA2
ULK*
JSK/M2
JSG
JSC3/JSC4
USSD
UFCD
USC
UB
JSB3
LMB
LML
HCM
HCA
LBC
CAC4
UCAC2
CAC-N
UCAC-N
RCS2
RCC2
PCC
SHC
MCP
GLC
MFC
BBS
RRC
GRC
RV3*
NHS
HRL
LN
Hand
Chuk
MecHnd/Chuk
ShkAbs
FJ
FK
SpdContr
Ending
LSH-HP
LSH
FH100
BSA2
BHA/BHG
LHA
LHAG
HAP
HKP
HCP
HGP
HLF2
HLA/HLB
HLAG/HLBG
HLC
HLD
HMF
HMF-G
HMFB
HFP
FH500
HBL
HJL
HMD
HDL
HJD
BHE

Finger length

When mounting an L-shaped attachment, use within the range given in the figure at right.

Closed direction

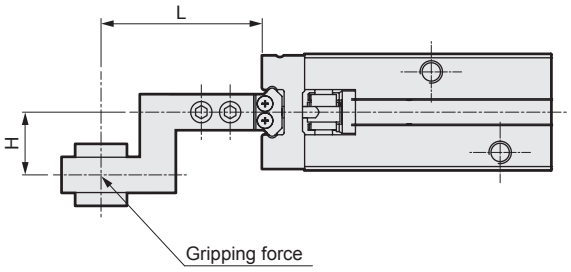

Open direction

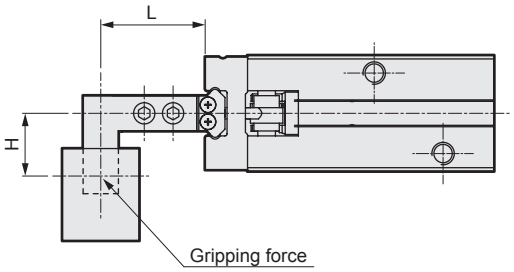

Closed direction

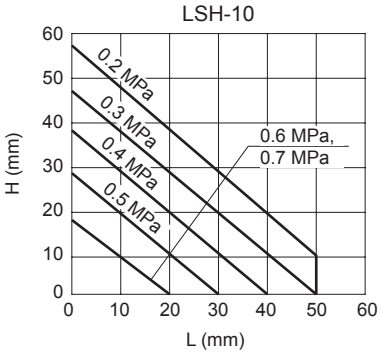

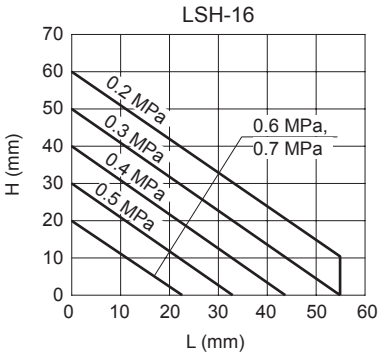

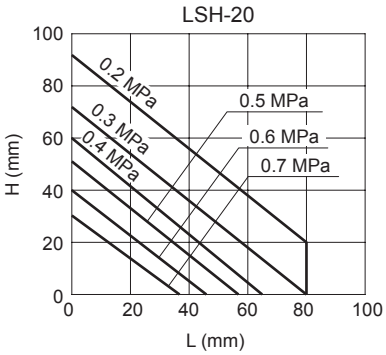

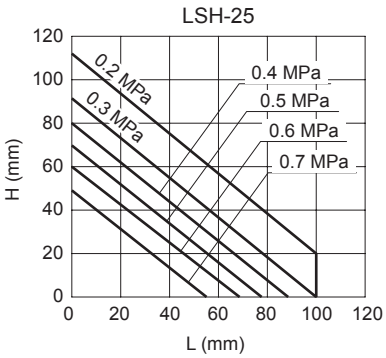

Open direction

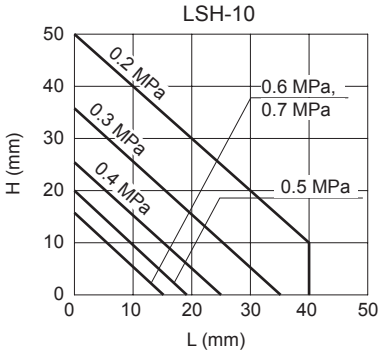

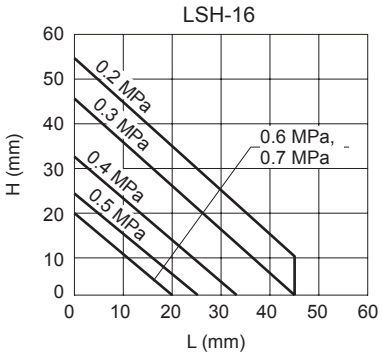

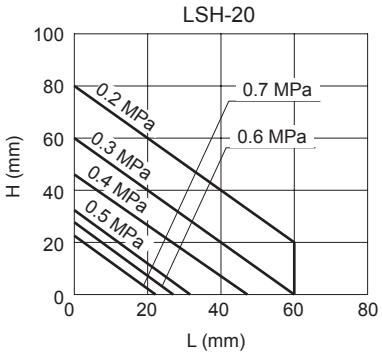

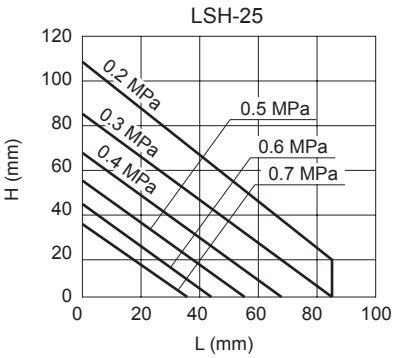

MEMO

Feather hand (mini-parallel hand) Double acting/single acting

FH100 Series

● Operating stroke length: 8, 11, 14, 18, 20 mm

Double acting

Single acting (normally open)

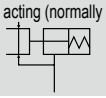

Specifications

Item	FH100									
	FH110-D	FH112-D	FH116-D	FH120-D	FH125-D	FH110-0	FH112-0	FH116-0	FH120-0	FH125-0
Actuation	Double acting					Single acting				
Working fluid	Compressed air									
Max. working pressure MPa	0.7 (≈100 psi, 7 bar)									
Min. working pressure MPa	0.15 (≈22 psi, 1.5 bar)					0.25 (≈36 psi, 2.5 bar)				
Proof pressure MPa	1.05 (≈150 psi, 10.5 bar)									
Ambient temperature °C	5 (41°F) to 60 (140°F)									
Port size	M3×0.5		M5×0.8			M3×0.5		M5×0.8		
Operating stroke length mm	8	11	15	18	20	8	11	15	18	20
Weight g	51	71	124	176	284	51	71	124	177	286
Repeatability mm	±0.03									
Max. operating frequency times/second	3									
Cushion	Open side rubber cushion									
Option	Proximity switch (2-wire/3-wire) * Closed side speed controller									

* Integrated speed controller is available only for double acting.

Switch specifications

Item	Proximity 2-wire	Proximity 3-wire
	T2H/V	T3H/V
Applications	Dedicated for programmable controller	For programmable controller, relay
Output method	-	NPN output
Power supply voltage	-	10 to 28 VDC
Load voltage/current	10 to 30 VDC, 5 to 20 mA (*1)	30 VDC or less, 100 mA or less
Indicator lamp	LED (Lit when ON)	
Leakage current	1 mA or less	10 μA or less
Weight	1 m:18 g 3 m:49 g 5 m:80 g	

*1 : The above max. load current is 20 mA at 25°C. If the operating ambient temperature around the switch is higher than 25°C, the current is lower than 20 mA. (5 to 10 mA at 60°C)

*2 : Refer to Ending Page 1 for detailed switch specifications and dimensions.

How to order

Without switch (built-in magnet for switch)

FH1 10 - D Y1 ——— B

With switch (built-in magnet for switch)

FH1 10 - D Y1 - T2H - R - B

Ⓐ Bore size

Ⓑ Option

Ⓒ Attachment *1

Ⓓ Switch model No. *2

* indicates the lead wire length.

Ⓔ Switch quantity

Ⓕ End mount *3

Code	Description
Ⓐ Bore size	
10	ø10
12	ø12
16	ø16
20	ø20
25	ø25

Ⓑ Option	
D	Standard (double acting)
O	Single acting (normally open)
Z	Double acting integrated speed controller

Ⓒ Attachment	
Blank	Without attachment
Y1	With attachment (Material S50C)
Y2	With attachment (Material MC nylon)

Ⓓ Switch model No.

Axial lead wire	Radial lead wire	Contact	Voltage AC	Voltage DC	Display	Lead wire
T2H*	T2V*	Proximity		●	1-color display	2-wire
T3H*	T3V*			●		3-wire

*** Lead wire length**	
Blank	1 m (standard)
3	3 m (option)
5	5 m (option)

Ⓔ Switch quantity	
R	1 on right (port) side open position
D	2

Ⓕ End mount	
Blank	Without end mount
B	With end mount

⚠ Precautions for model No. selection

*1 : Refer to pages 1762 and 1763 for the dimensions and compatible model of the attachment. When ordered as an option, two are attached at shipment.

*2 : Switches other than Ⓓ Switch model No. are also available. (Made to order) Refer to Ending Page 1 for details.

*3 : When with end mount (model No. B), select switch with radial lead wire (model No. T*V). The end mount is attached at delivery.

[Example of model No.]

FH112-ZY1-T2V-D-B

Model: Feather hand (mini-parallel hand)

Ⓐ Bore size : ø12
Ⓑ Option : Double acting integrated speed controller
Ⓒ Attachment : With attachment (Material S50C)
Ⓓ Switch model No. : Proximity T2V switch, lead wire 1 m
Ⓔ Switch quantity : 2
Ⓕ End mount : With end mount

How to order end mount

FH - B - 10

Code	Description
Ⓐ Bore size	
10	ø10
12	ø12
16	ø16
20	ø20
25	ø25

How to order switch

SW - T2H

Switch model No.
(Item Ⓓ above)

LCM
LCR
LCG
LCW
LCX
STM
STG
STS/STL
STR2
UCA2
ULK*
JSK/M2
JSG
JSC3/JSC4
USSD
UFCD
USC
UB
JSB3
LMB
LML
HCM
HCA
LBC
CAC4
UCAC2
CAC-N
UCAC-N
RCS2
RCC2
PCC
SHC
MCP
GLC
MFC
BBS
RRC
GRC
RV3*
NHS
HRL
LN
Hand
Chuk
MecHnd/Chuk
ShkAbs
FJ
FK
SpdContr
Ending
LSH-HP
LSH
FH100
BSA2
BHA/BHG
LHA
LHAG
HAP
HKP
HCP
HGP
HLF2
HLA/HLB
HLAG/HLBG
HLC
HLD
HMF
HMF-G
HMFB
HFP
FH500
HBL
HJL
HMD
HDL
HJD
BHE

Internal structure and parts list

● Standard (double acting)/O (normally open)

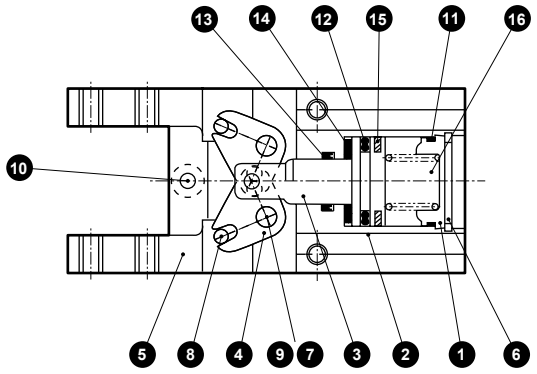

● With speed controller

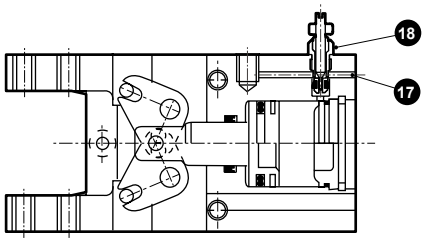

Cannot be disassembled

Standard (double acting) does not contain a ⑯ spring.

No.	Part name	Material	Remarks	No.	Part name	Material	Remarks
1	Cylinder guard	Acetal resin		10	Hexagon socket head cap screw	Alloy steel	
2	Body	Aluminum alloy	Lubrication alumite treatment	11	Cylinder gasket	Nitrile rubber	
3	Piston	Stainless steel		12	Piston packing	Nitrile rubber	
4	Arm	Stainless steel	Heat treatment	13	Rod packing	Nitrile rubber	
5	Finger	Stainless steel		14	Cushion	Urethane rubber	
6	Snap ring	Stainless steel		15	Magnet		Nickeling
7	Fulcrum axis	Alloy steel	Heat treatment	16	Spring	Stainless steel	
8	Operation shaft	Alloy steel	Heat treatment	17	Steel ball	Stainless steel	
9	Hexagon socket set screw	Alloy steel		18	Flow control valve assembly		

Gripping power performance data

- Gripping power represents the thrust (per one finger) in the arrow direction shown in the figure.
- The gripping power in the opening/closing directions with finger length L of hand with a supply pressure of 0.15 to 0.7 MPa is shown.

● Open direction (⇦) ------ (shown with broken line)
● Closed direction (➡) —— (shown with continuous line)

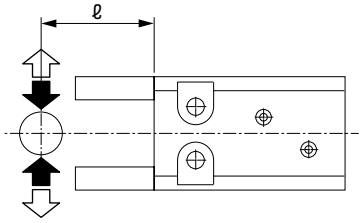

(Note) Single acting closed side gripping power is decreased by 25 to 30% compared to the double acting.

Restriction range for length of finger ℓ

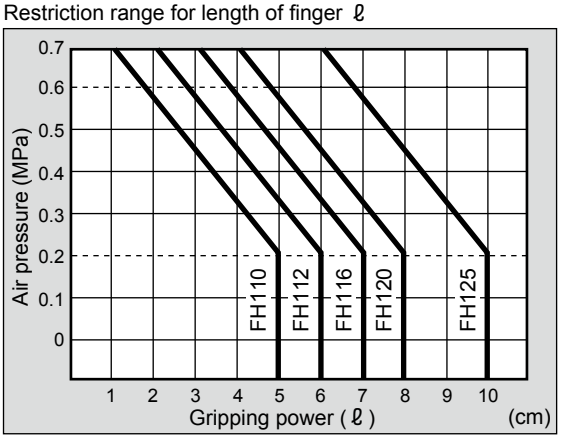

● FH110

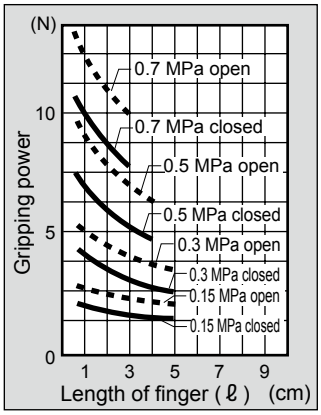

When making a selection, read the precautions for design and selection on page 1764.

● FH112

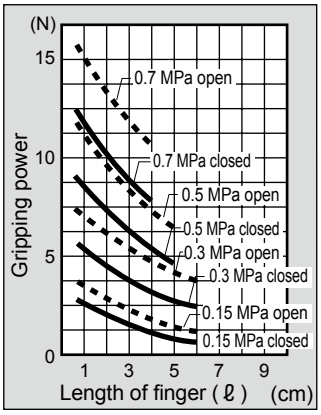

● FH116

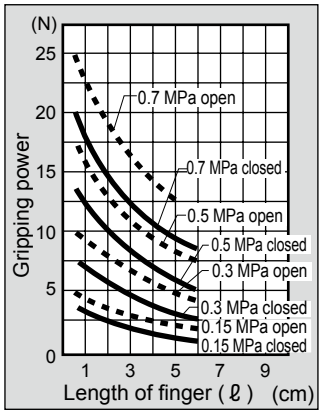

● FH120

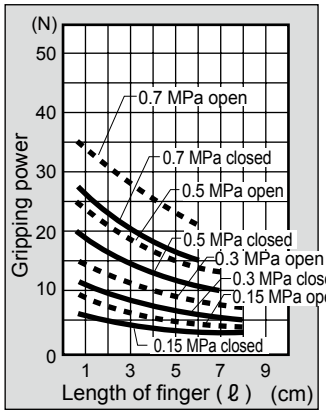

● FH125

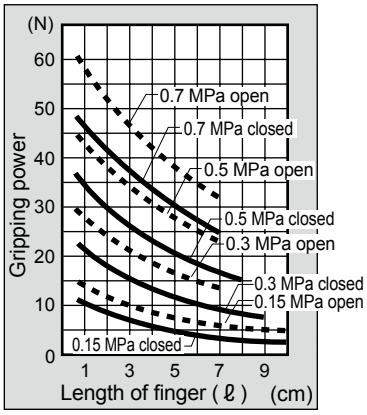

Dimensions

● FH110-D/FH110-O

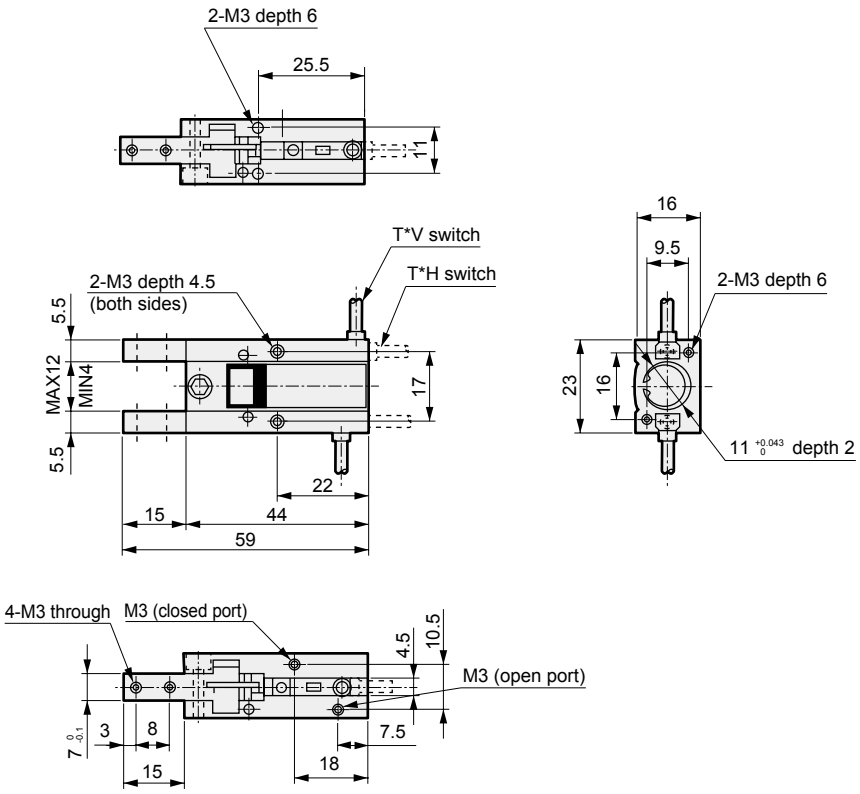

● With speed controller (FH110-Z)

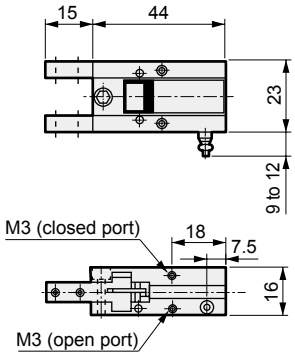

● With end mount

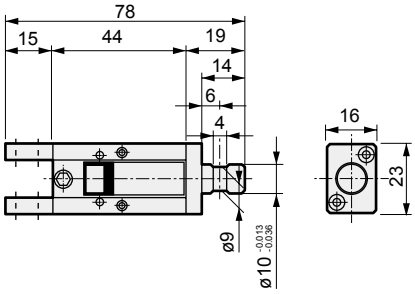

● FH112-D/FH112-O

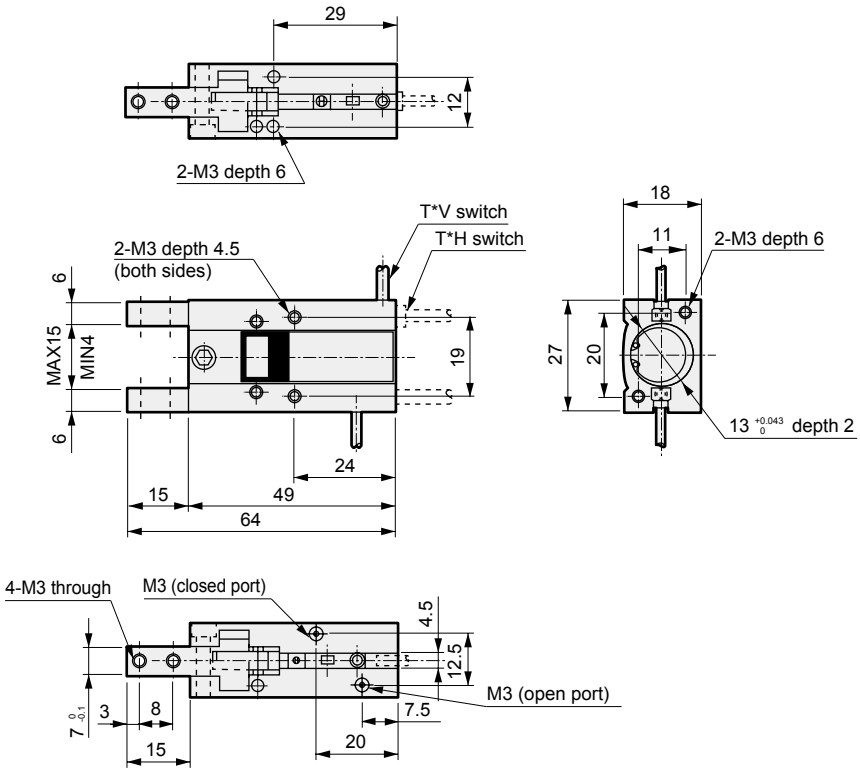

● With speed controller (FH112-Z)

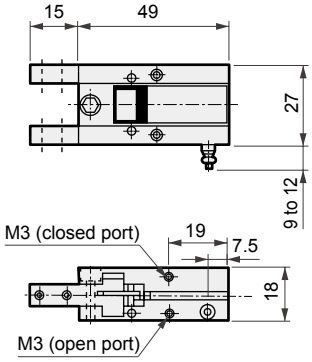

● With end mount

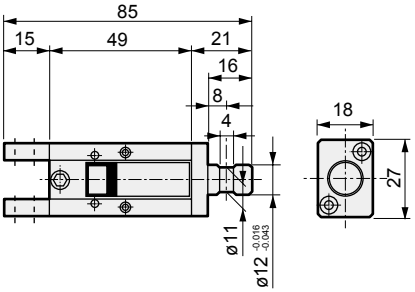

LCM
LCR
LCG
LCW
LCX
STM
STG
STS/STL
STR2
UCA2
ULK*
JSK/M2
JSG
JSC3/JSC4
USSD
UFCD
USC
UB
JSB3
LMB
LML
HCM
HCA
LBC
CAC4
UCAC2
CAC-N
UCAC-N
RCS2
RCC2
PCC
SHC
MCP
GLC
MFC
BBS
RRC
GRC
RV3*
NHS
HRL
LN
Hand
Chuk
MecHnd/Chuk
ShkAbs
FJ
FK
SpdContr
Ending
LSH-HP
LSH
FH100
BSA2
BHA/BHG
LHA
LHAG
HAP
HKP
HCP
HGP
HLF2
HLA/HLB
HLAG/HLBG
HLC
HLD
HMF
HMF-G
HMFB
HFP
FH500
HBL
HJL
HMD
HDL
HJD
BHE

Dimensions

● FH116-D/FH116-O

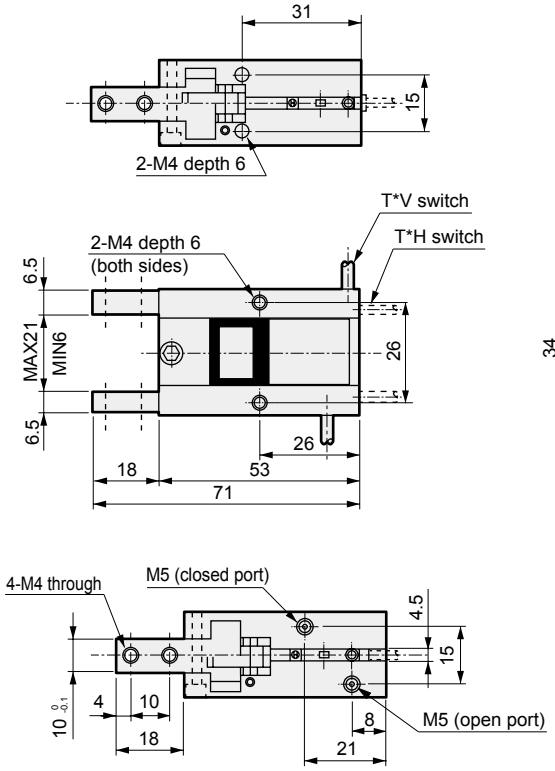

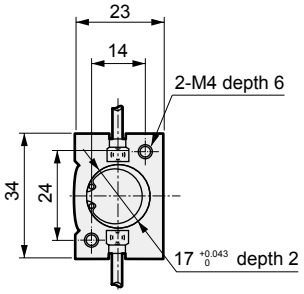

● With speed controller (FH116-Z)

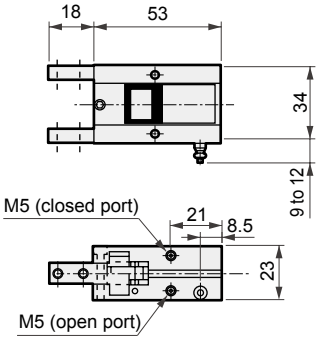

● With end mount

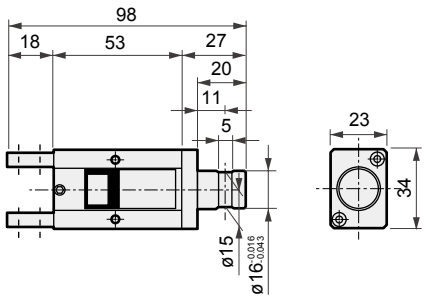

● FH120-D/FH120-O

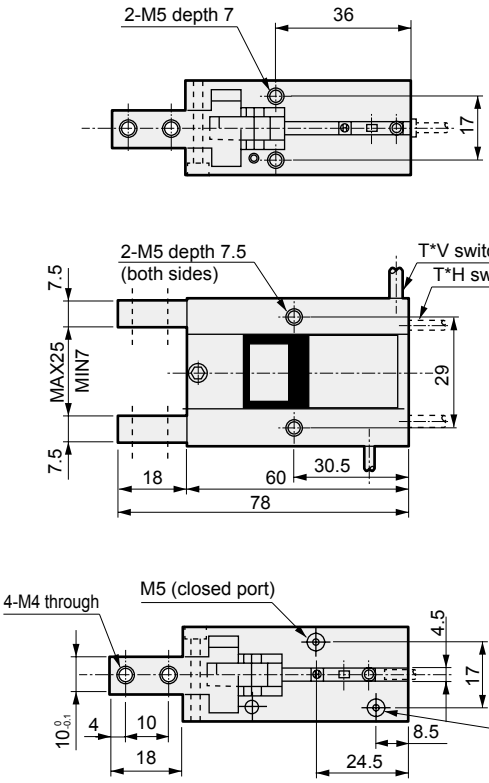

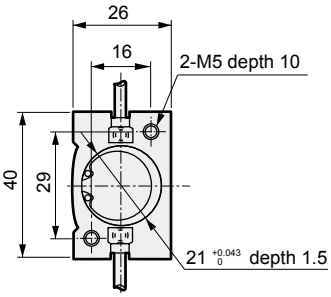

● With speed controller (FH120-Z)

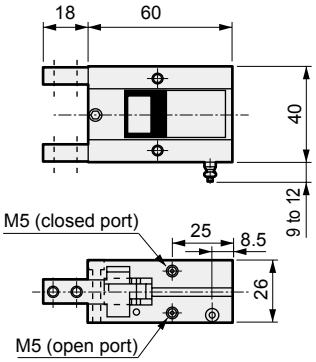

● With end mount

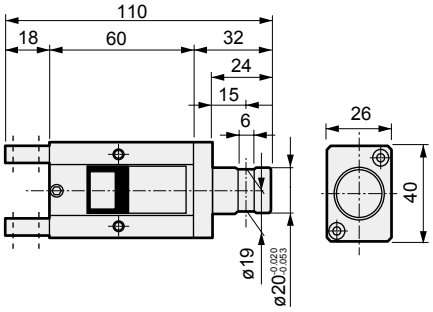

Dimensions

● FH125-D/FH125-O

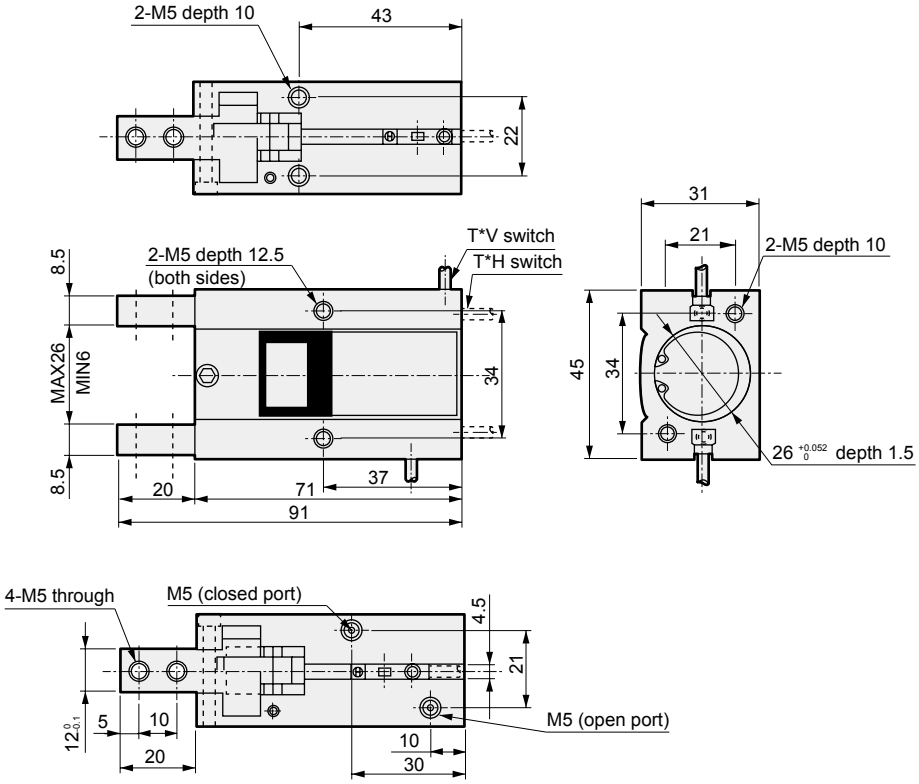

● With speed controller (FH125-Z)

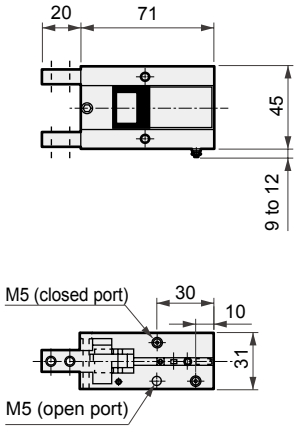

● With end mount

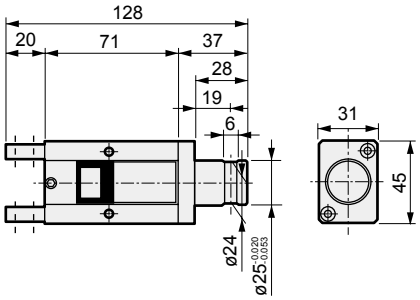

Miniature cross roller parallel hand Double acting/single acting

BSA2 Series

● Operational stroke length: 4 mm

Double acting

Single acting (normally open)

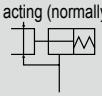

Single acting (normally closed)

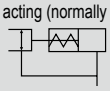

Specifications

Item			BSA2
Size			006C
Bore size		mm	ø6
Actuation			Double acting/single acting
Working fluid			Compressed air
Max. working pressure		MPa	0.7 (≈100 psi, 7 bar)
Min. working pressure MPa	Double acting		0.15 (≈22 psi, 1.5 bar)
	Normally open		0.25 (≈36 psi, 2.5 bar)
	Normally closed		
Ambient temperature		°C	5 (41°F) to 60 (140°F)
Port size			M3
Operating stroke length		mm	4
Rod diameter		mm	ø3
Volumetric capacity (reciprocating)		cm^3	0.1
Repeatability		mm	±0.01
Weight		kg	0.034
Lubrication			Not required (use turbine oil class 1 ISO VG32 if necessary for lubrication)

Switch specifications

Item	Proximity 2-wire		Proximity 3-wire	
	F2H, F2V	F2S *3	F3H, F3V	F3S *3
Applications	Dedicated for programmable controller		For programmable controller, relay	
Output method	—	—	NPN output	
Power supply voltage	—	—	10 to 28 VDC	
Load voltage/current	10 to 30 VDC, 5 to 20 mA (*1)		30 VDC, 50 mA or less	
Indicator lamp	Yellow LED (Lit when ON)	LED (Lit when ON)	Yellow LED (Lit when ON)	LED (Lit when ON)
Leakage current	1 mA or less		10 μA or less	
Weight	1 m:10 g 3 m:29 g		1 m:10 g 3 m:29 g	

*1 : The above max. load current is 20 mA at 25°C. The current is lower than 20 mA if the operating ambient temperature around the switch is higher than 25˚C. (5 to 10 mA at 60˚C)
*2 : The switch uses a bend-resistant lead wire.
*3 : Refer to Ending Page 1 for detailed switch specifications and dimensions.
*4 : If mounting two switches in one groove to enable detection at both ends, mount them so that their set screws face outward.

How to order

Without switch (built-in magnet for switch)

BSA2 - 006C - O

With switch (built-in magnet for switch)

BSA2 - 006C - O - F2V - D

Model No. Size Ⓐ Option Ⓑ Switch model No. Ⓒ Switch quantity

Code	Description
Ⓐ Option	
Blank	Standard (double acting)
O	Single acting (normally open)
C	Single acting (normally closed)

Ⓑ Switch model No.

Axial lead wire	Radial lead wire	Contact	Voltage AC	Voltage DC	Display	Lead wire
-	F2S*	Proximity		●	1-color display	2-wire
F2H*	F2V*			●		2-wire
-	F3S*			●		3-wire
F3H*	F3V*			●		3-wire

* Lead wire length	
Blank	1 m (standard)
3	3 m (option)

Ⓒ Switch quantity	
R	1 on open side
H	1 on closed side
D	2

[Example of model No.]

BSA2-006C-O-F2V-D

Model: Miniature cross roller parallel hand
Size: 006C
Ⓐ Option : Single acting, normally open
Ⓑ Switch model No. : Proximity F2V switch, lead wire 1 m
Ⓒ Switch quantity : 2

How to order switch

SW - F2H

Switch model No.
(Item Ⓑ above)

Note) When two switches are selected, the open/close stroke length will be short. Depending on workpiece size, both switches may turn ON.

LCM
LCR
LCG
LCW
LCX
STM
STG
STS/STL
STR2
UCA2
ULK*
JSK/M2
JSG
JSC3/JSC4
USSD
UFCD
USC
UB
JSB3
LMB
LML
HCM
HCA
LBC
CAC4
UCAC2
CAC-N
UCAC-N
RCS2
RCC2
PCC
SHC
MCP
GLC
MFC
BBS
RRC
GRC
RV3*
NHS
HRL
LN
Hand
Chuk
MecHnd/Chuk
ShkAbs
FJ
FK
SpdContr
Ending
LSH-HP
LSH
FH100
BSA2
BHA/BHG
LHA
LHAG
HAP
HKP
HCP
HGP
HLF2
HLA/HLB
HLAG/HLBG
HLC
HLD
HMF
HMF-G
HMFB
HFP
FH500
HBL
HJL
HMD
HDL
HJD
BHE

Internal structure and parts list

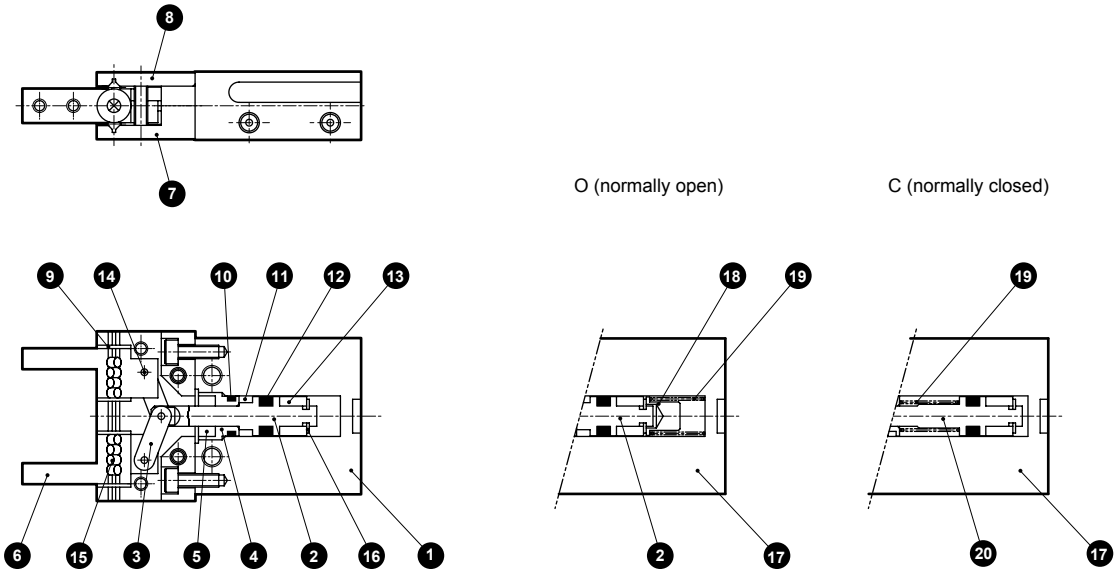

Cannot be disassembled

No.	Part name	Material	No.	Part name	Material
1	Body	Aluminum alloy	11	Cylinder gasket	Nitrile rubber
2	Piston	Stainless steel	12	Piston packing	Nitrile rubber
3	Arm	Stainless steel	13	Magnet	
4	Piston guide	Stainless steel	14	Operation shaft	Stainless steel
5	Piston guide holder	Stainless steel	15	Cross roller	Alloy steel
6	Finger	Steel	16	Snap ring	Stainless steel
7	Bearing guide A	Steel	17	O, C body	Aluminum alloy
8	Bearing guide B	Steel	18	Spring guide	Stainless steel
9	Bearing holder	Stainless steel	19	O, C spring	Stainless steel
10	Rod packing	Nitrile rubber	20	C piston	Stainless steel

Gripping power performance data

- Gripping power represents the thrust (per one finger) in the arrow direction shown in the figure.
- At a supply pressure of 0.3, 0.5, or 0.7 MPa,
  the gripping power in the opening/closing directions with finger length ℓ of hand is shown.
  - ● Open direction (⇦) ····· (shown with broken line)
  - ● Closed direction (➡) ——— (shown with continuous line)

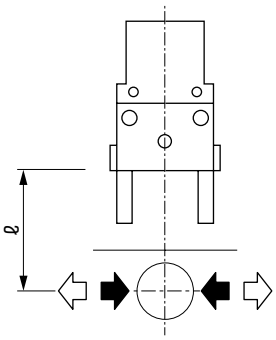

● BSA2-006C

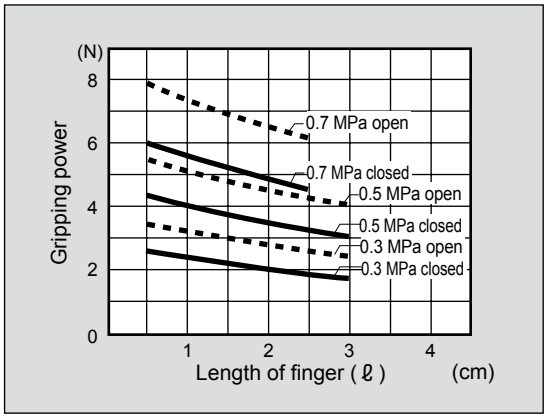

Note: O type gripping power decreases approximately 20 to 30% in the closed direction compared to double acting.
C type gripping power decreases approximately 10 to 20% in the open direction compared to the double acting.
When making a selection, read the precautions for design and selection on page 1764.

Dimensions

● Dimensions in ( ) are for O [normally open] and C [normally closed] specifications.
● Dimensions in ( ) are for O [normally open] specifications.

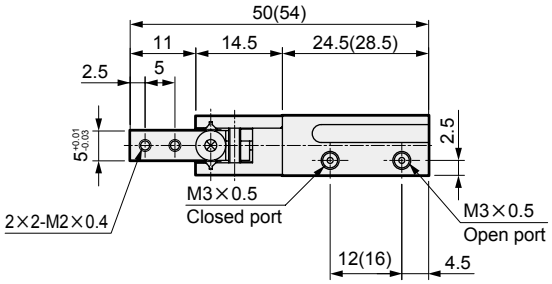

● With switch

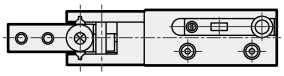

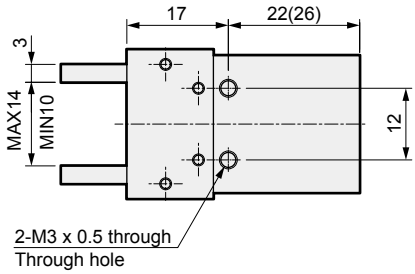

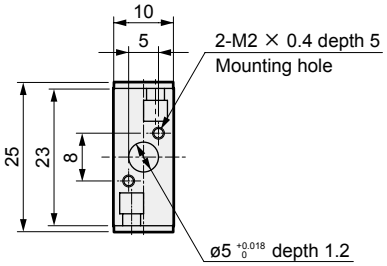

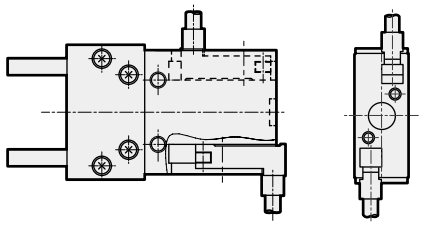

Note: When using F□H or F□V, the switch protrudes from the end face of the body head side. If this projection is a problem, use F□S.

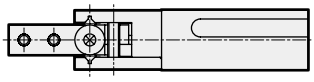

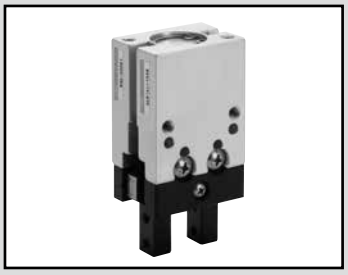

Compact cross roller parallel hand Double acting/single acting

BHA Series

● Operating stroke length: 5, 9, 11, 15 mm

Double acting

Single acting (normally open)

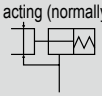

Single acting (normally closed)

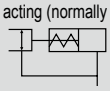

RoHS CAD

Specifications

Item		BHA			
Size		01CS1	03CS1	04CS1	05CS1
Bore size	mm	ø12	ø16	ø20	ø25
Actuation		Double acting/single acting			
Working fluid		Compressed air			
Max. working pressure	MPa	0.7 (≈100 psi, 7 bar)			
Min. working pressure MPa	Double acting	0.1 (≈15 psi, 1 bar)			
	Normally open	0.3 (≈44 psi, 3 bar)			
	Normally closed				
Ambient temperature	°C	5 (41°F) to 60 (140°F)			
Port size		M3	M5		
Operating stroke length	mm	5	9	11	15
Rod diameter	mm	ø6	ø8	ø10	ø12
Volumetric capacity (reciprocating)	cm^3	0.32	1.58	2.89	6.32
Repeatability	mm	±0.01			
Weight	kg	0.100	0.145	0.253	0.420
Lubrication		Not required (use turbine oil class 1 ISO VG32 if necessary for lubrication)			

Switch specifications

Item	Proximity 2-wire	Proximity 3-wire
	T2H/V	T3H/V
Applications	Dedicated for programmable controller	For programmable controller, relay
Output method	—	NPN output
Power supply voltage	—	10 to 28 VDC
Load voltage/current	10 to 30 VDC, 5 to 20 mA (*1)	30 VDC or less, 100 mA or less
Indicator lamp	LED (Lit when ON)	
Leakage current	1 mA or less	10 μA or less
Weight	1 m:18 g 3 m:49 g 5 m:80 g	

*1 : The above max. load current is 20 mA at 25°C. The current is lower than 20 mA if the operating ambient temperature around the switch is higher than 25˚C. (5 to 10 mA at 60˚C)

*2 : Refer to Ending Page 1 for detailed switch specifications and dimensions.

* The BHA-LN Series with length measuring function (length measuring sensor) is also available. Refer to page 1465 for details.

How to order

Without switch (built-in magnet for switch)

BHA - 01CS1 - O

With switch (built-in magnet for switch)

BHA - 01CS1 - O - T2H - R

Ⓐ Size

Ⓑ Option *1

Ⓒ Switch model No.
* indicates the lead wire length.

Ⓓ Switch quantity

Code	Description
Ⓐ Size	
01CS1	
03CS1	
04CS1	
05CS1	
Ⓑ Option	
Blank	Standard (double acting)
O	Single acting (normally open)
C	Single acting (normally closed)
Y1	With attachment (Material S50C)
Y2	With attachment (Material MC nylon)

Ⓒ Switch model No.

Axial lead wire	Radial lead wire	Contact	Voltage AC	Voltage DC	Display	Lead wire
T2H*	T2V*	Proximity		●	1-color display	2-wire
T3H*	T3V*			●		3-wire

* Lead wire length	
Blank	1 m (standard)
3	3 m (option)
5	5 m (option)

Ⓓ Switch quantity	
R	1 on open side
H	1 on closed side
D	2

⚠ Precautions for model No. selection

*1: Refer to pages 1762 to 1763 for the dimensions and compatible model of the attachment. When ordered as an option, two are attached at shipment.

[Example of model No.]

BHA-01CS1-O-T3H-R

Model: Compact cross roller parallel hand

Ⓐ Size : 01CS1
Ⓑ Option : Single acting, normally open type
Ⓒ Switch model No. : Proximity T3H switch, lead wire 1 m
Ⓓ Switch quantity : 1 on open side

How to order switch

SW - T2H

Switch model No.
(Item Ⓒ above)

Specifications for rechargeable battery (Catalog No. CC-1226A)

BHA - … - P4* ● Design compatible with rechargeable battery manufacturing process.

* Contact CKD for details.

LCM
LCR
LCG
LCW
LCX
STM
STG
STS/STL
STR2
UCA2
ULK*
JSK/M2
JSG
JSC3/JSC4
USSD
UFCD
USC
UB
JSB3
LMB
LML
HCM
HCA
LBC
CAC4
UCAC2
CAC-N
UCAC-N
RCS2
RCC2
PCC
SHC
MCP
GLC
MFC
BBS
RRC
GRC
RV3*
NHS
HRL
LN
Hand
Chuk
MecHnd/Chuk
ShkAbs
FJ
FK
SpdContr
Ending
LSH-HP
LSH
FH100
BSA2
BHA/BHG
LHA
LHAG
HAP
HKP
HCP
HGP
HLF2
HLA/HLB
HLAG/HLBG
HLC
HLD
HMF
HMF-G
HMFB
HFP
FH500
HBL
HJL
HMD
HDL
HJD
BHE

Internal structure and parts list

Standard (double acting)/
O (normally open)

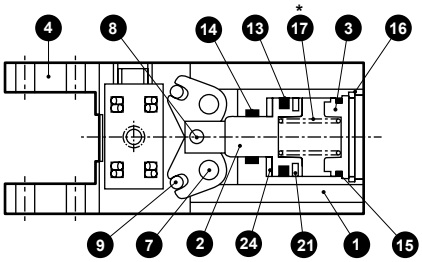

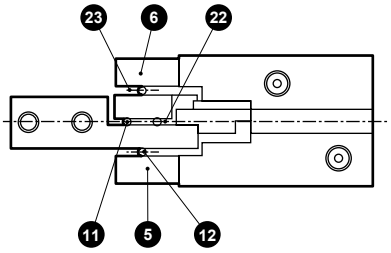

C (normally closed)

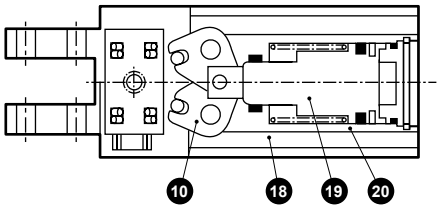

Cannot be disassembled

* Standard (double acting) does not contain a ⑰ spring.

No.	Part name	Material	Remarks	No.	Part name	Material	Remarks
1	Body	Aluminum alloy		13	Piston packing	Nitrile rubber	
2	Piston	Stainless steel		14	Rod packing	Nitrile rubber	
3	Cylinder guard	Acetal resin		15	Cylinder gasket	Nitrile rubber	
4	Finger	Steel		16	Snap ring		
5	Bearing guide A	Steel		17	Spring	Stainless steel	O type only
6	Bearing guide B	Steel		18	Body	Aluminum alloy	
7	Fulcrum axis	Steel		19	Piston	Stainless steel	
8	Operation shaft A	Steel		20	Spring	Stainless steel	
9	Operation shaft B	Steel		21	Magnet		
10	Arm	Steel		22	Retainer A	Stainless steel	
11	Cross roller A	Alloy steel		23	Retainer B	Stainless steel	
12	Cross roller B	Alloy steel		24	Cushion	Urethane rubber	

Gripping power performance data

- Gripping power represents the thrust (per one finger) in the arrow direction shown in the figure.
- The gripping power in the opening/closing directions with finger length L of hand with a supply pressure of 0.3, 0.5 and 0.7 MPa is shown.
  - ● Open direction (⇦) ------ (shown with broken line)
  - ● Closed direction (➡) —— (shown with continuous line)

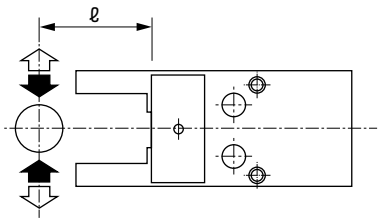

(Note) O type gripping power decreases approximately 20 to 30% in the closed direction compared to double acting.
C type gripping power decreases approximately 10 to 20% in the open direction compared to the double acting.
When making a selection, read the precautions for design and selection on page 1764.

● BHA-01CS1

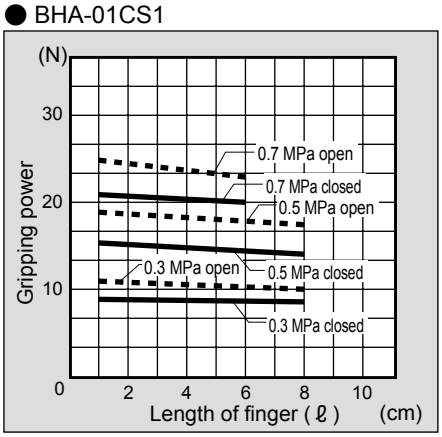

● BHA-03CS1

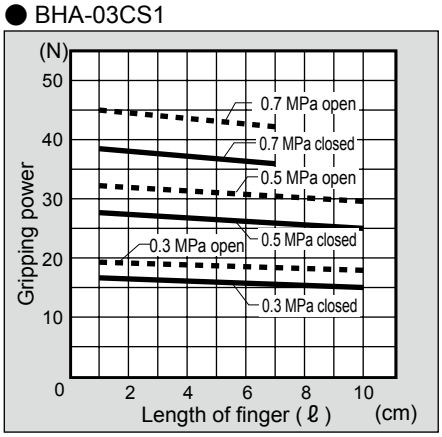

● BHA-04CS1

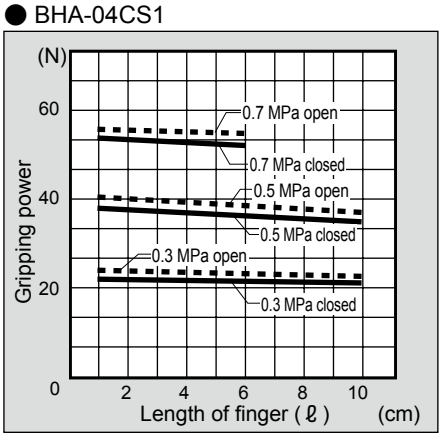

● BHA-05CS1

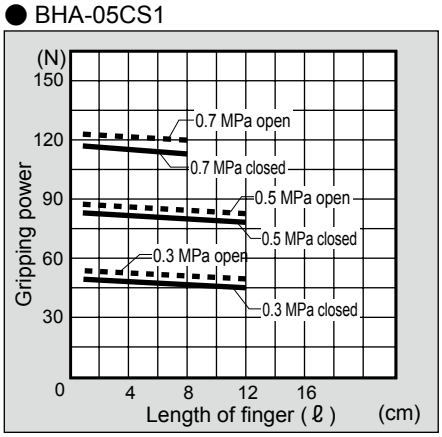

Dimensions

● BHA-01CS1 standard/O/C

● Dimensions in ( ) are for C [normally closed] specifications.

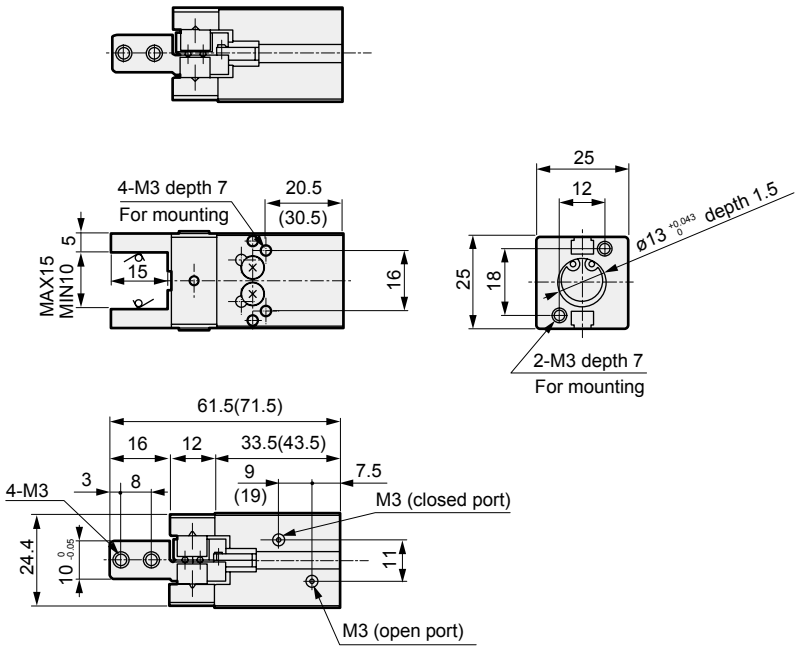

● With switch

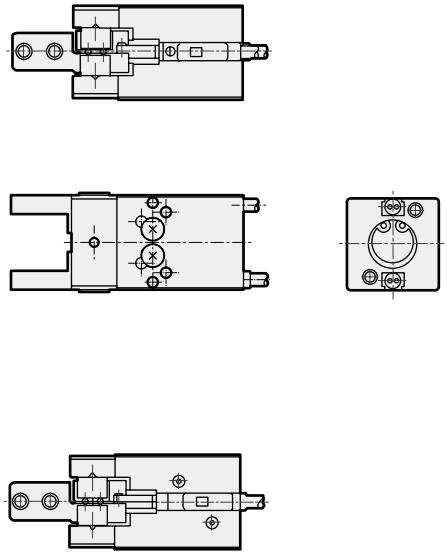

Note: When using T□H or T□V, the switches of both project from the end face of body head side.

● BHA-03CS1 standard/O/C

● Dimensions in ( ) are for C [normally closed] specifications.

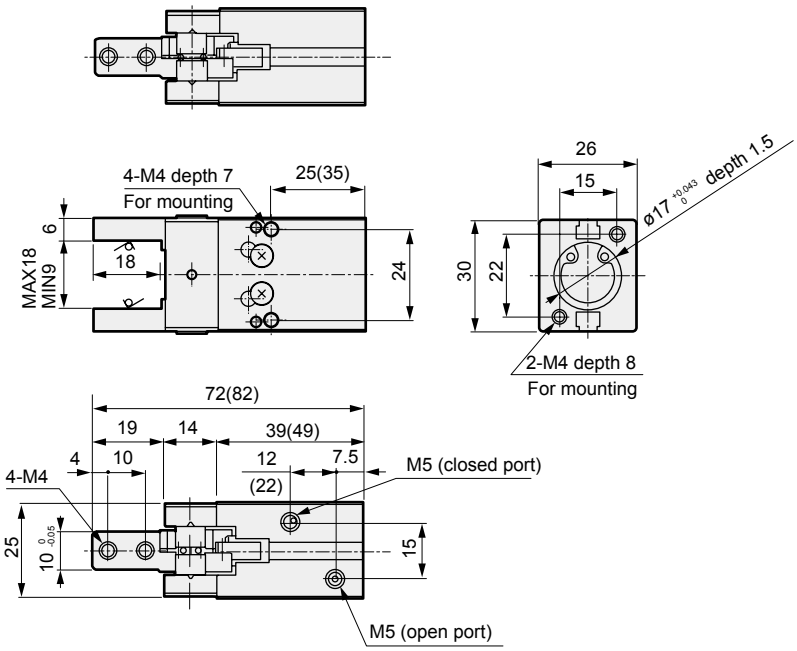

● With switch

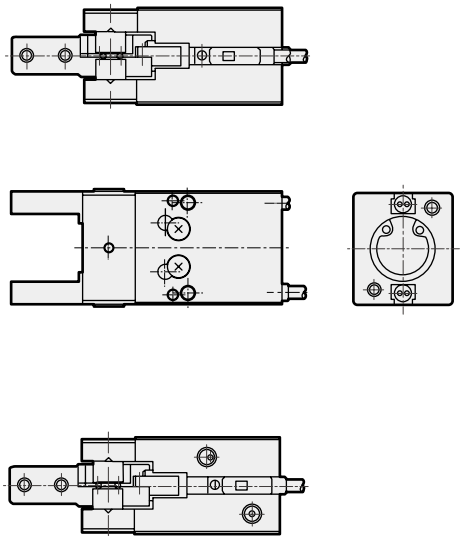

Note: When using T□H or T□V, the switches of both project from the end face of body head side.

LCM
LCR
LCG
LCW
LCX
STM
STG
STS/STL
STR2
UCA2
ULK*
JSK/M2
JSG
JSC3/JSC4
USSD
UFCD
USC
UB
JSB3
LMB
LML
HCM
HCA
LBC
CAC4
UCAC2
CAC-N
UCAC-N
RCS2
RCC2
PCC
SHC
MCP
GLC
MFC
BBS
RRC
GRC
RV3*
NHS
HRL
LN
Hand
Chuk
MecHnd/Chuk
ShkAbs
FJ
FK
SpdContr
Ending
LSH-HP
LSH
FH100
BSA2
BHA/BHG
LHA
LHAG
HAP
HKP
HCP
HGP
HLF2
HLA/HLB
HLAG/HLBG
HLC
HLD
HMF
HMF-G
HMFB
HFP
FH500
HBL
HJL
HMD
HDL
HJD
BHE

Dimensions CAD

● BHA-04CS1 standard/O/C

● Dimensions in ( ) are for C [normally closed] specifications.

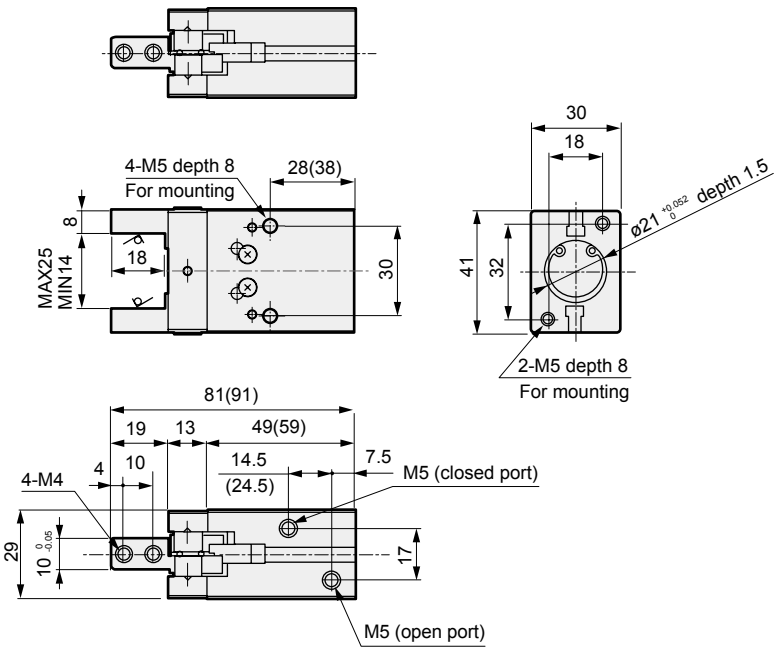

● With switch

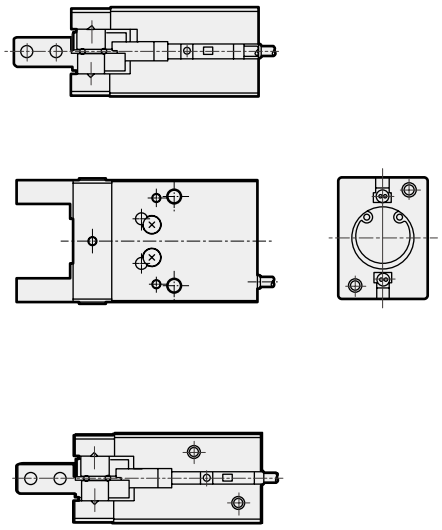

● BHA-05CS1 standard/O/C

● Dimensions in ( ) are for C [normally closed] specifications.

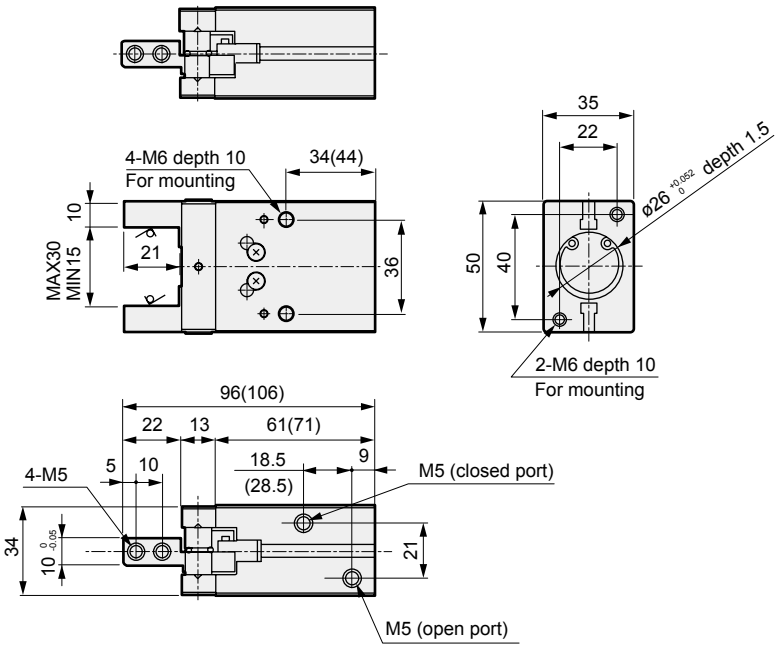

● With switch

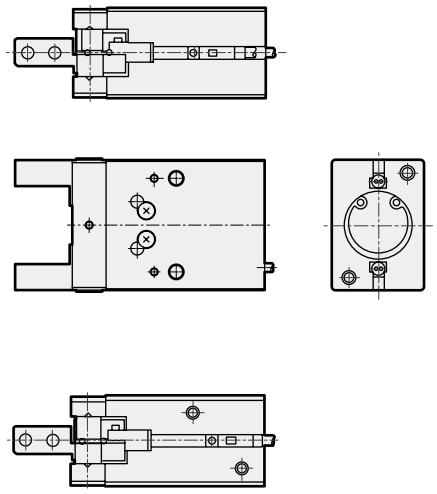

MEMO

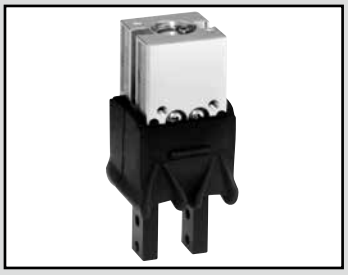

Compact cross roller parallel hand with rubber cover
Double acting/single acting

BHG Series

● Operating stroke length: 5, 9, 11, 15 mm

Double acting

Single acting (normally open)

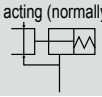

Single acting (normally closed)

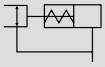

RoHS CAD

Specifications

Item		BHG			
Size		01CS	03CS	04CS	05CS
Bore size	mm	ø12	ø16	ø20	ø25
Actuation		Double acting/single acting			
Working fluid		Compressed air			
Max. working pressure	MPa	0.7 (≈100 psi, 7 bar)			
Min. working pressure MPa	Double acting	0.15 (≈22 psi, 1.5 bar)			
	Normally open	0.3 (≈44 psi, 3 bar)			
	Normally closed				
Ambient temperature	°C	5 (41°F) to 60 (140°F)			
Port size		M3	M5		
Operating stroke length	mm	5	9	11	15
Rod diameter	mm	ø6	ø8	ø10	ø12
Volumetric capacity (reciprocating)	cm^3	0.32	1.58	2.89	6.32
Repeatability	mm	±0.01			
Weight	kg	0.118	0.165	0.238	0.455
Lubrication		Not required (use turbine oil class 1 ISO VG32 if necessary for lubrication)			

Switch specifications and variations

Item	Proximity 2-wire	Proximity 3-wire
	T2H/V	T3H/V
Applications	Dedicated for programmable controller	For programmable controller, relay
Output method	——	Output method
Power supply voltage	——	10 to 28 VDC
Load voltage/current	10 to 30 VDC, 5 to 20 mA (*1)	30 VDC or less, 100 mA or less
Indicator lamp	LED (Lit when ON)	
Leakage current	1 mA or less	10 μA or less
Weight	1 m:18 g 3 m:49 g 5 m:80 g	

*1 : The above max. load current is 20 mA at 25°C. The current is lower than 20 mA if the operating ambient temperature around the switch is higher than 25˚C. (5 to 10 mA at 60˚C)

*2 : Refer to Ending Page 1 for detailed switch specifications and dimensions.

* The BHG-LN Series with length measuring function (length measuring sensor) is also available. Refer to page 1465 for details.

How to order

Without switch (built-in magnet for switch)

BHG - 01CS - O

With switch (built-in magnet for switch)

BHG - 01CS - O - T2H - R

Ⓐ Size

Ⓑ Option *1

Ⓒ Switch model No.

Ⓓ Switch quantity

Code	Description
Ⓐ Size	
01CS	
03CS	
04CS	
05CS	
Ⓑ Option	
Blank	Standard (double acting)
O	Single acting (normally open)
C	Single acting (normally closed)
Y1	With attachment (Material S50C)
Y2	With attachment (Material MC nylon)

Ⓒ Switch model No.

Axial lead wire	Radial lead wire	Contact	Voltage AC	Voltage DC	Display	Lead wire
T2H*	T2V*	Proximity		●	1-color display	2-wire
T3H*	T3V*			●		3-wire

* Lead wire length 3-wire	
Blank	1 m (standard)
3	3 m (option)
5	5 m (option)

Ⓓ Switch quantity	
R	1 on open side
H	1 on closed side
D	2

⚠ Precautions for model No. selection

*1: Refer to pages 1762 to 1763 for the dimensions and compatible model of the attachment. When ordered as an option, two are attached at shipment.

[Example of model No.]

BHG-01CS-O-T3H-R

Model: Compact cross roller parallel hand with rubber cover

Ⓐ Size : 01CS
Ⓑ Option : Single acting, normally open
Ⓒ Switch model No.: Proximity T3H switch, lead wire 1 m
Ⓓ Switch quantity : 1 on open side

How to order switch

SW - T2H

Switch model No.
(Item Ⓒ above)

Specifications for rechargeable battery (Catalog No. CC-1226A)

BHG - … - P4*

● Design compatible with rechargeable battery manufacturing process.

* Contact CKD for details.

LCM
LCR
LCG
LCW
LCX
STM
STG
STS/STL
STR2
UCA2
ULK*
JSK/M2
JSG
JSC3/JSC4
USSD
UFCD
USC
UB
JSB3
LMB
LML
HCM
HCA
LBC
CAC4
UCAC2
CAC-N
UCAC-N
RCS2
RCC2
PCC
SHC
MCP
GLC
MFC
BBS
RRC
GRC
RV3*
NHS
HRL
LN
Hand
Chuk
MecHnd/Chuk
ShkAbs
FJ
FK
SpdContr
Ending
LSH-HP
LSH
FH100
BSA2
BHA/BHG
LHA
LHAG
HAP
HKP
HCP
HGP
HLF2
HLA/HLB
HLAG/HLBG
HLC
HLD
HMF
HMF-G
HMFB
HFP
FH500
HBL
HJL
HMD
HDL
HJD
BHE

Internal structure and parts list

● Standard (double acting)/O (normally open)

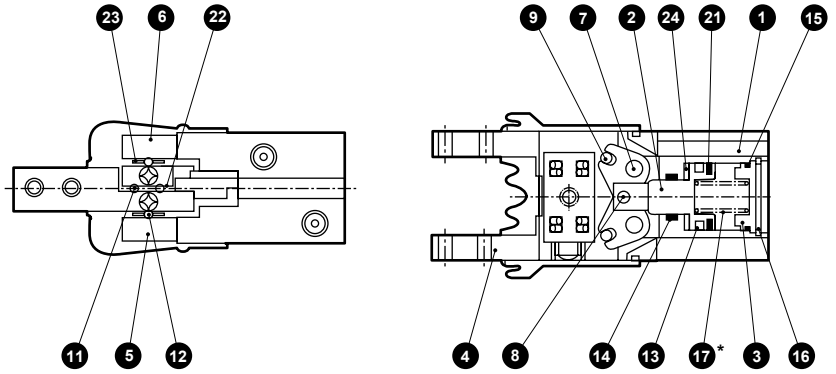

● C (normally closed)

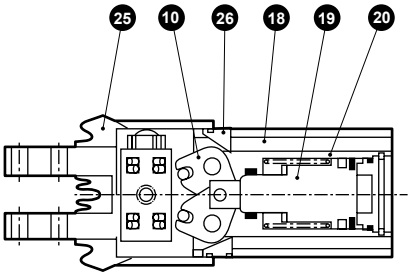

* Standard (double acting) does not contain a ⑰ spring.

Cannot be disassembled

No.	Part name	Material	Remarks	No.	Part name	Material	Remarks
1	Body	Aluminum alloy		14	Rod packing	Nitrile rubber	
2	Piston	Stainless steel		15	Cylinder gasket	Nitrile rubber	
3	Cylinder guard	Acetal resin		16	Snap ring	Stainless steel	
4	Finger	Steel		17	Spring	Stainless steel	O type only
5	Bearing guide A	Steel		18	Body	Aluminum alloy	
6	Bearing guide B	Steel		19	Piston	Stainless steel	
7	Fulcrum axis	Steel		20	Spring	Stainless steel	
8	Operation shaft A	Steel		21	Magnet		
9	Operation shaft B	Steel		22	Retainer A	Stainless steel	
10	Arm	Steel		23	Retainer B	Stainless steel	
11	Cross roller A	Alloy steel		24	Cushion	Urethane rubber	
12	Cross roller B	Alloy steel		25	Rubber cover	Nitrile rubber	
13	Piston packing	Nitrile rubber		26	Bracket	Aluminum alloy	

Rubber cover part model No.

Size	Part model No.	Part No.
01CS	BHG-01K	25
03CS	BHG-03K	
04CS	BHG-04K	
05CS	BHG-05K	

Gripping power performance data

- Gripping power represents the thrust (per one finger) in the arrow direction shown in the figure.
- The gripping power in the opening/closing directions with finger length L of hand with a supply pressure of 0.3, 0.5 and 0.7 MPa is shown.
  - ● Open direction (⇦) ------ (shown with broken line)
  - ● Closed direction (➡) —— (shown with continuous line)

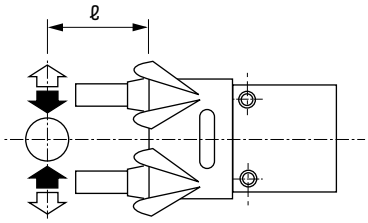

(Note) O type gripping power decreases approximately 20 to 30% in the closed direction compared to double acting.
C type gripping power decreases approximately 10 to 20% in the open direction compared to the double acting.
When making a selection, read the precautions for design and selection on page 1764.

● BHG-01CS

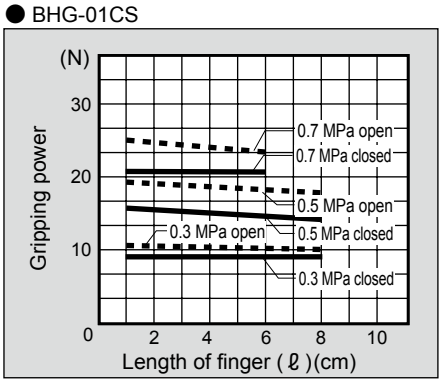

● BHG-03CS

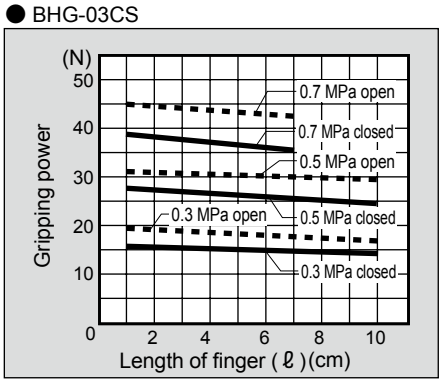

● BHG-04CS

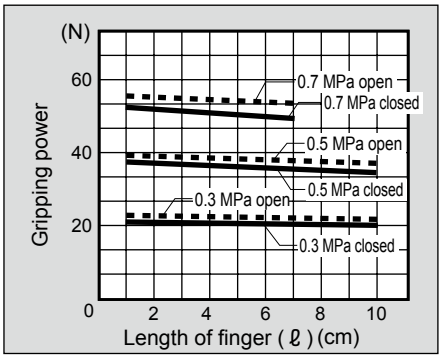

● BHG-05CS

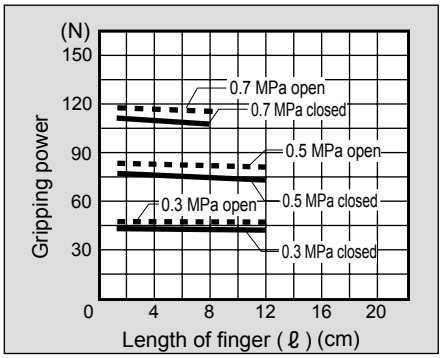

Dimensions

● BHG-01CS standard/O/C

● Dimensions in ( ) are for C [normally closed] specifications.

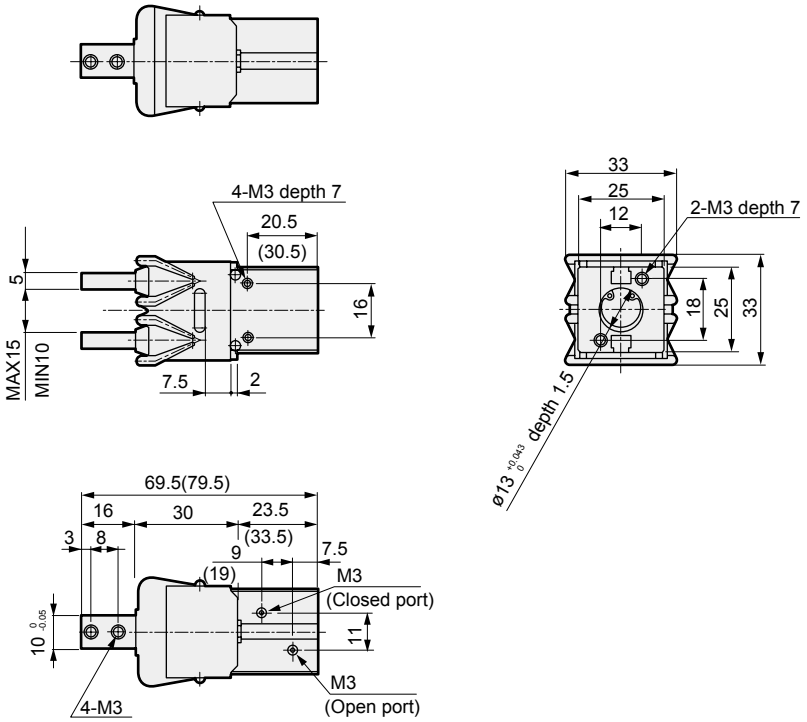

● With switch

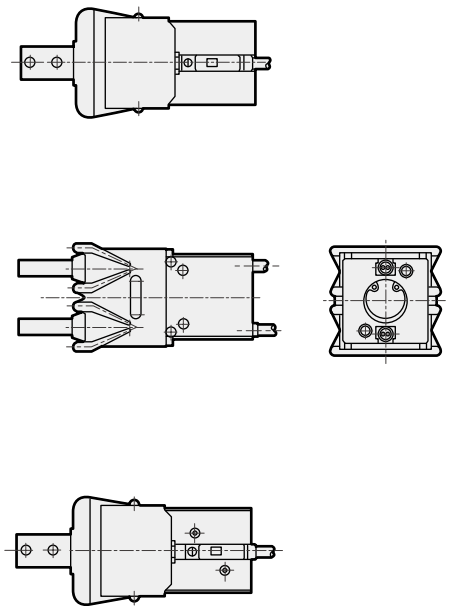

Note: When using T□H or T□V, the switches of both project from the end face of body head side.

● BHG-03CS standard/O/C

● Dimensions in ( ) are for C [normally closed] specifications.

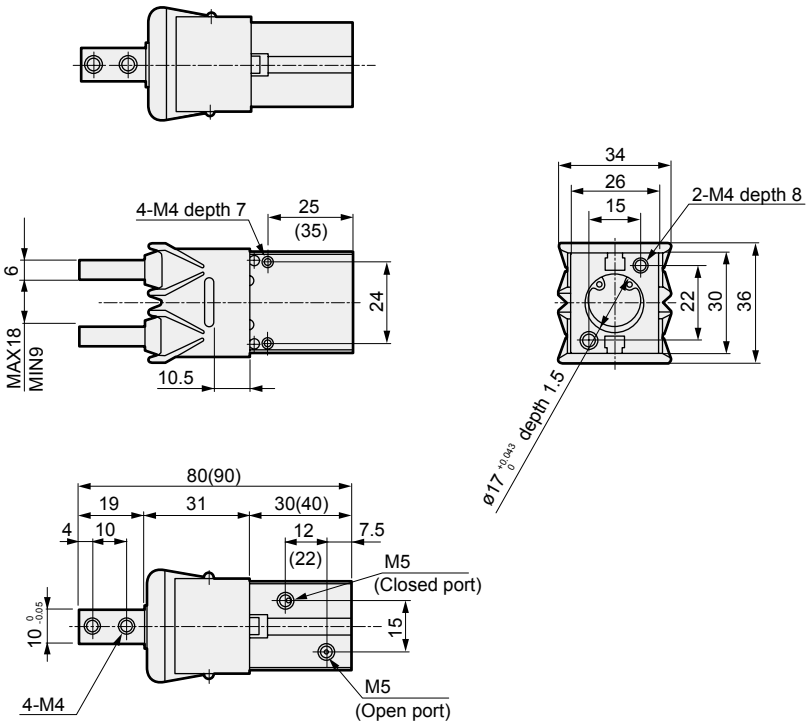

● With switch

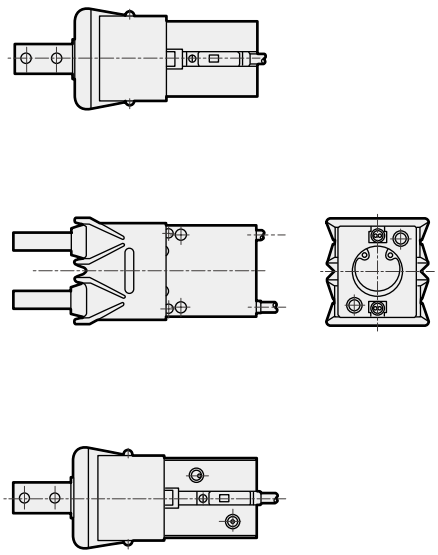

Note: When using T□H or T□V, the switches of both project from the end face of body head side.

LCM
LCR
LCG
LCW
LCX
STM
STG
STS/STL
STR2
UCA2
ULK*
JSK/M2
JSG
JSC3/JSC4
USSD
UFCD
USC
UB
JSB3
LMB
LML
HCM
HCA
LBC
CAC4
UCAC2
CAC-N
UCAC-N
RCS2
RCC2
PCC
SHC
MCP
GLC
MFC
BBS
RRC
GRC
RV3*
NHS
HRL
LN
Hand
Chuk
MecHnd/Chuk
ShkAbs
FJ
FK
SpdContr
Ending
LSH-HP
LSH
FH100
BSA2
BHA/BHG
LHA
LHAG
HAP
HKP
HCP
HGP
HLF2
HLA/HLB
HLAG/HLBG
HLC
HLD
HMF
HMF-G
HMFB
HFP
FH500
HBL
HJL
HMD
HDL
HJD
BHE

Dimensions

● BHG-04CS standard/O/C

● Dimensions in ( ) are for C [normally closed] specifications.

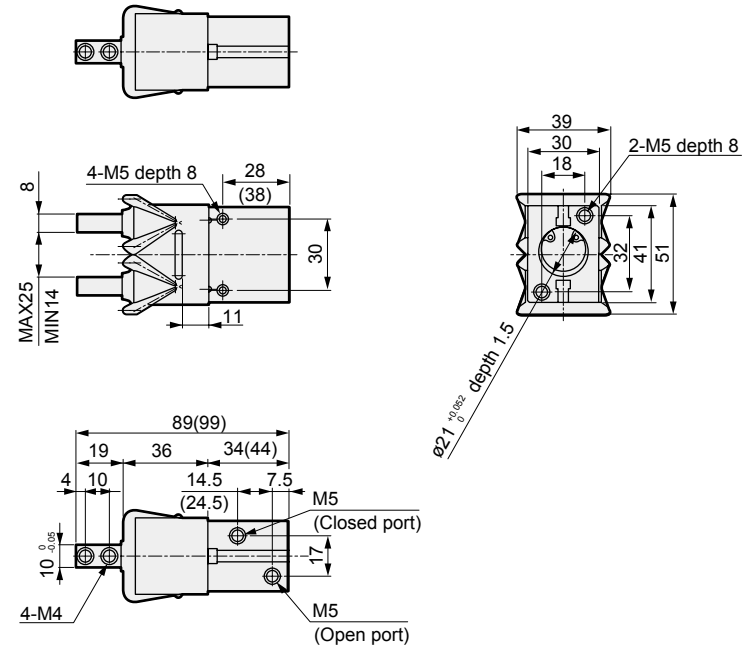

● With switch

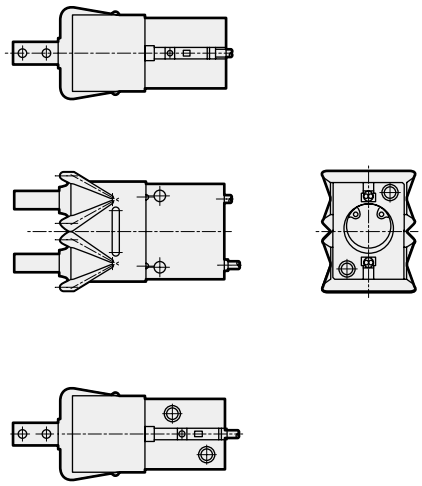

● BHG-05CS standard/O/C

● Dimensions in ( ) are for C [normally closed] specifications.

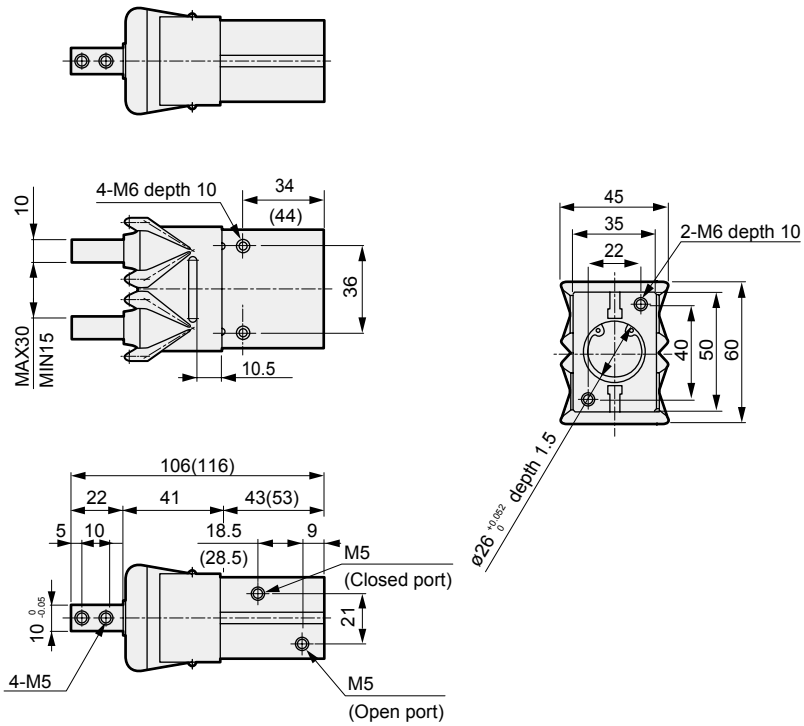

● With switch

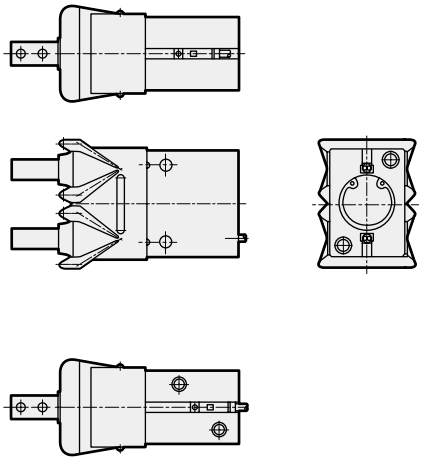

MEMO

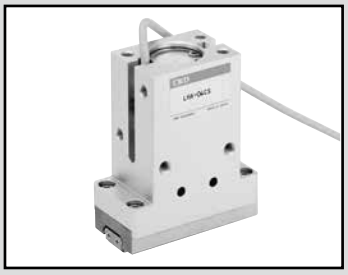

Linear guide hand Double acting/single acting

LHA Series

● Operating stroke length: 4, 5, 9, 11, 15, 20 mm

Double acting

Single acting (normally open)

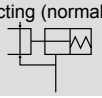

Single acting (normally closed)

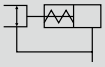

RoHS CAD

Specifications

Item		LHA					
Size		006CS	01CS	03CS	04CS	05CS	06CS
Bore size	mm	ø6	ø12	ø16	ø20	ø25	ø32
Actuation		Double acting/single acting					
Working fluid		Compressed air					
Max. working pressure	MPa	0.7 (≈100 psi, 7 bar)					
Min. working pressure MPa	Double acting	0.15 (≈22 psi, 1.5 bar)	0.1 (≈15 psi, 1 bar)				
	Single acting	0.3 (≈44 psi, 3 bar)					
Ambient temperature	°C	5 (41°F) to 60 (140°F)					
Port size		M3		M5			
Operating stroke length	mm	4	5	9	11	15	20
Rod diameter	mm	ø3	ø6	ø8	ø10	ø12	ø16
Volumetric capacity (reciprocating)	cm^3	0.10	0.32	1.58	2.89	6.32	14.07
Repeatability	mm	±0.01					
Weight	kg	0.04	0.085	0.15	0.36	0.52	0.82
Lubrication		Not required (use turbine oil class 1 ISO VG32 if necessary for lubrication)					

Switch specifications

Item	Proximity 2-wire	Proximity 3-wire	Proximity 2-wire	Proximity 3-wire
	T2H, T2V	T3H, T3V	F2H, F2V	F3H, F3V
Applications	Dedicated for programmable controller	For programmable controller, relay	Dedicated for programmable controller	For programmable controller, relay
Output method	-	NPN output	-	NPN output
Power supply voltage	-	10 to 28 VDC	-	10 to 28 VDC
Load voltage/current	10 to 30 VDC, 5 to 20 mA (*1)	30 VDC or less, 100 mA or less	10 to 30 VDC, 5 to 20 mA	30 VDC, 50 mA or less
Indicator lamp	LED (Lit when ON)		Yellow LED (Lit when ON)	
Leakage current	1 mA or less	10 μA or less	1 mA or less	10 μA or less
Weight	1 m:18 g 3 m:49 g 5 m:80 g		1 m:10 g 3 m:29 g	

*1 : The above max. load current is 20 mA at 25°C.
The current is lower than 20 mA if the operating ambient temperature around the switch is higher than 25˚C. (5 to 10 mA at 60˚C)
*2 : The F type switch uses a bend-resistant lead wire.
*3 : Refer to Ending Page 1 for detailed switch specifications and dimensions.

How to order

Without switch (built-in magnet for switch)

LHA - 03CS - O

With switch (built-in magnet for switch)

LHA - 03CS - O - T2H - R

Ⓐ Size

Ⓑ Option

Ⓒ Switch model No.
* indicates the lead wire length. *1 *2

Ⓓ Switch quantity

Code	Description
Ⓐ Size	
006CS	
01CS	
03CS	
04CS	
05CS	
06CS	
Ⓑ Option	
Blank	Standard (double acting)
O	Single acting (normally open)
C	Single acting (normally closed)

Ⓒ Switch model No.

Axial lead wire	Radial lead wire	Contact	Voltage AC	Voltage DC	Display	Lead wire
F2H*	**F2V***	Proximity		●	1-color display	2-wire
F3H*	**F3V***			●		3-wire
T2H*	**T2V***			●		2-wire
T3H*	**T3V***			●		3-wire

*** Lead wire length**	
Blank	1 m (standard)
3	3 m (option)
5	5 m (option)

Ⓓ Switch quantity	
R	1 on open side
H	1 on closed side
D	2

⚠ Precautions for model No. selection

*1 : Only the LHA-006CS is provided with the F switch.
*2 : The 5 m lead wire cannot be selected for the F switch.

[Example of model No.]

LHA-03CS-O-T2H-R

Model: Linear guide hand

Ⓐ Size : 03CS
Ⓑ Option : Single acting, normally open
Ⓒ Switch model No.: Proximity T2H switch, lead wire 1 m
Ⓓ Switch quantity : 1 on open side

How to order switch

SW - F2H*

Switch model No.
(Item Ⓒ above)

LCM
LCR
LCG
LCW
LCX
STM
STG
STS/STL
STR2
UCA2
ULK*
JSK/M2
JSG
JSC3/JSC4
USSD
UFCD
USC
UB
JSB3
LMB
LML
HCM
HCA
LBC
CAC4
UCAC2
CAC-N
UCAC-N
RCS2
RCC2
PCC
SHC
MCP
GLC
MFC
BBS
RRC
GRC
RV3*
NHS
HRL
LN
Hand
Chuk
MecHnd/Chuk
ShkAbs
FJ
FK
SpdContr
Ending
LSH-HP
LSH
FH100
BSA2
BHA/BHG
LHA
LHAG
HAP
HKP
HCP
HGP
HLF2
HLA/HLB
HLAG/HLBG
HLC
HLD
HMF
HMF-G
HMFB
HFP
FH500
HBL
HJL
HMD
HDL
HJD
BHE

Internal structure

● LHA-01CS to 05CS

Standard (double acting)/0 (normally open)

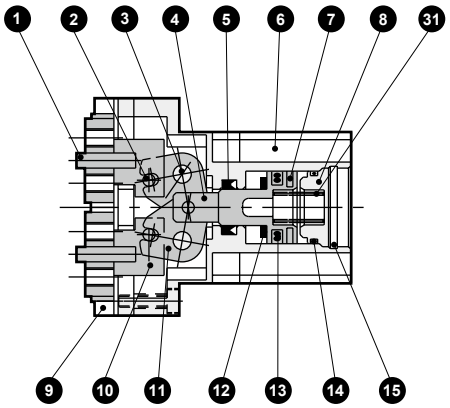

C (normally closed)

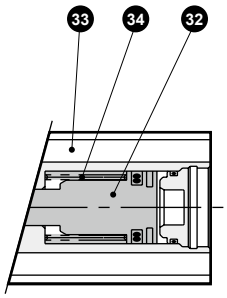

● LHA-006CS

Standard (double acting)

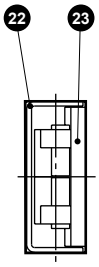

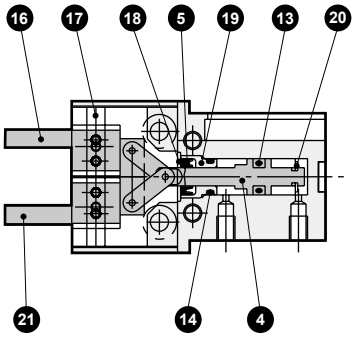

O (normally open)

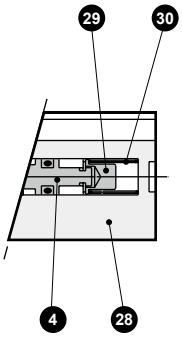

C (normally closed)

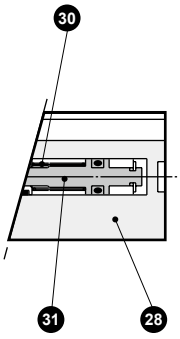

● LHA-06CS

Standard (double acting)

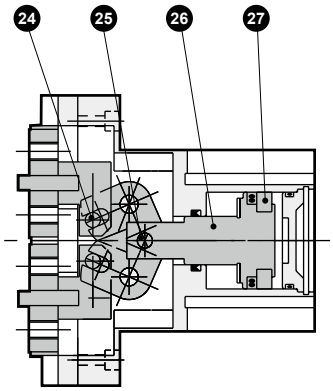

C (normally open)

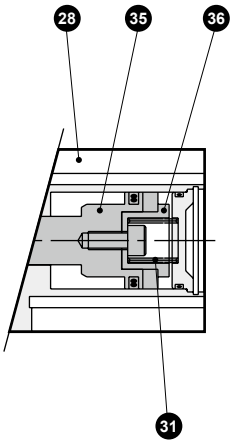

C (normally closed)

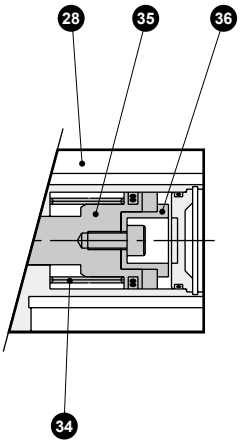

Cannot be disassembled

Parts list

No.	Part name	Material	Remarks	No.	Part name	Material	Remarks
1	Positioning pin	Alloy steel		19	Piston guide	Stainless steel	
2	Operation shaft	Alloy steel		20	E type snap ring	Stainless steel	
3	Fulcrum axis	Alloy steel		21	Finger A	Stainless steel	
4	Piston	Stainless steel		22	Cover	Stainless steel	
5	Rod sealant	Nitrile rubber		23	Guide plate	Stainless steel	
6	Body	Aluminum alloy		24	Operation shaft B	Alloy steel	
7	Semicircle magnet			25	Operation shaft A	Steel	
8	Cylinder guard	Acetal resin		26	Piston	Stainless steel	
9	Linear guide			27	Magnet		
10	Master plate	Stainless steel		28	NO, NC Body	Aluminum alloy	
11	Arm	Stainless steel		29	Spring guide	Stainless steel	
12	Cushion	Urethane seat		30	NO, NC Spring	Stainless steel	
13	Piston seal	Nitrile rubber		31	NO Spring	Stainless steel	
14	Cylinder sealant	Nitrile rubber		32	NC Piston	Stainless steel	
15	C type snap ring	Stainless steel		33	NC Body	Aluminum alloy	
16	Finger B	Stainless steel		34	NC Spring	Stainless steel	
17	Linear guide			35	NO, NC Piston A	Stainless steel	
18	Piston guide holder	Stainless steel		36	Piston B	Acetal resin	

LCM
LCR
LCG
LCW
LCX
STM
STG
STS/STL
STR2
UCA2
ULK*
JSK/M2
JSG
JSC3/JSC4
USSD
UFCD
USC
UB
JSB3
LMB
LML
HCM
HCA
LBC
CAC4
UCAC2
CAC-N
UCAC-N
RCS2
RCC2
PCC
SHC
MCP
GLC
MFC
BBS
RRC
GRC
RV3*
NHS
HRL
LN
Hand
Chuk
MecHnd/Chuk
ShkAbs
FJ
FK
SpdContr
Ending
LSH-HP
LSH
FH100
BSA2
BHA/BHG
LHA
LHAG
HAP
HKP
HCP
HGP
HLF2
HLA/HLB
HLAG/HLBG
HLC
HLD
HMF
HMF-G
HMFB
HFP
FH500
HBL
HJL
HMD
HDL
HJD
BHE

Gripping power performance data

- Gripping power represents the thrust (per one finger) in the arrow direction shown in the figure.
- The gripping power in the opening/closing directions with finger length L of hand with a supply pressure of 0.3, 0.5 and 0.7 MPa is shown.
  - ·Open direction (⇦) - - - - - - - - - - (shown with broken line)
  - ·Closed direction (➡) ———————— (shown with continuous line)

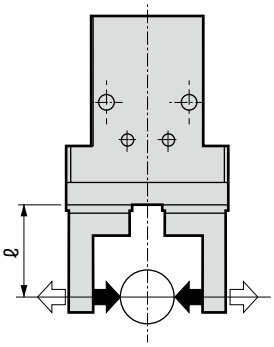

(Note) O type gripping power decreases approximately 20 to 30% in the closed direction compared to double acting.
C type gripping power decreases approximately 10 to 20% in the open direction compared to the double acting.
When making a selection, read the precautions for design and selection on page 1764.

● LHA-006CS

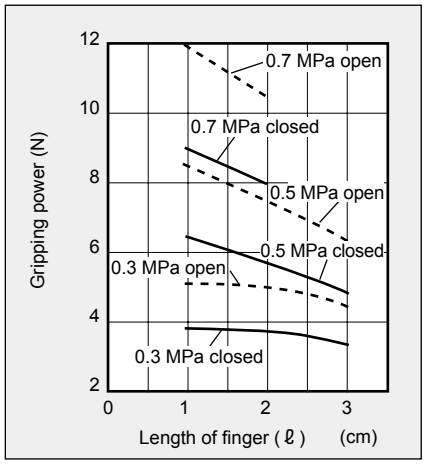

● LHA-01CS

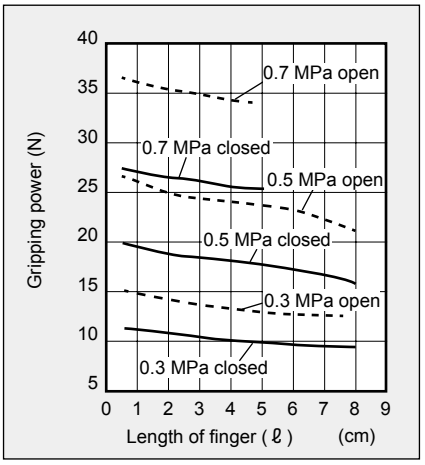

● LHA-03CS

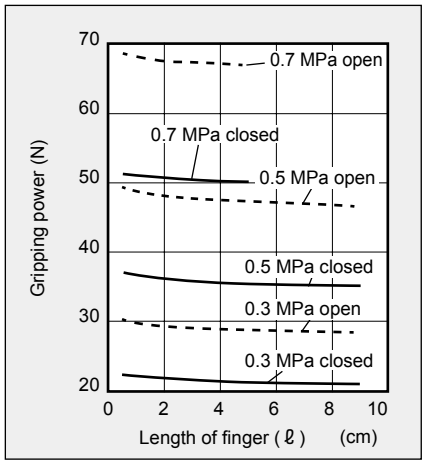

● LHA-04CS

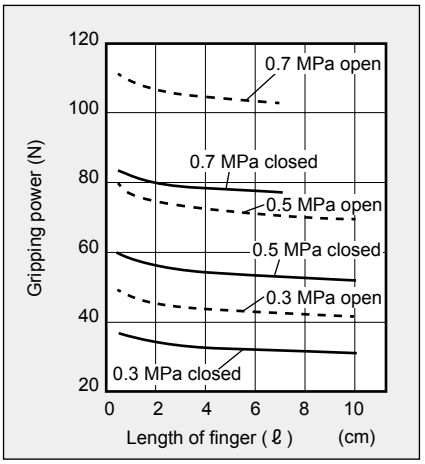

● LHA-05CS

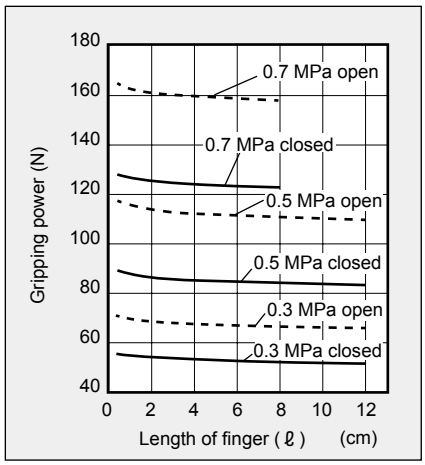

● LHA-06CS

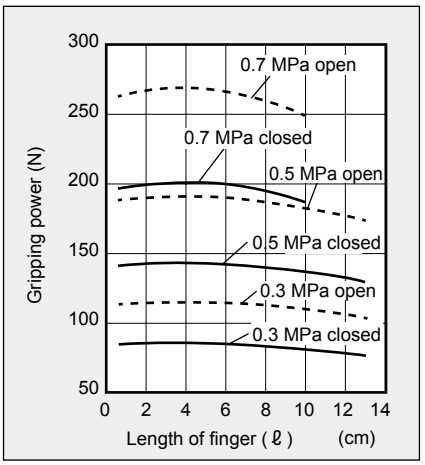

Dimensions

● LHA-006CS standard/O/C
· Dimensions in ( ) are for O (normally open) and C (normally closed) specifications.

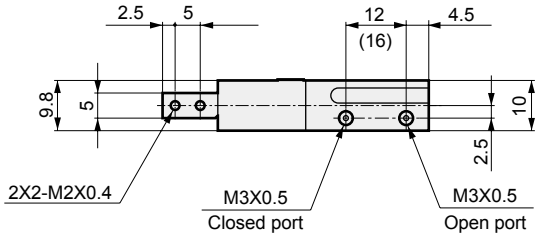

● With switch

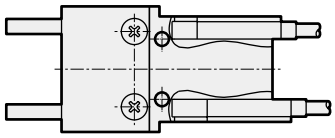

Note : When using F□H or F□V, the switches of both protrude from the end face of the body head side. If this projection is a problem, use F□S.

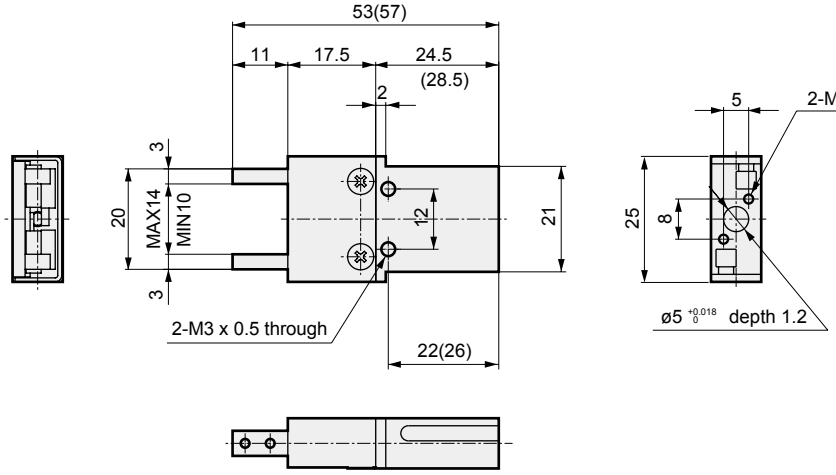

● LHA-01CS standard/O/C
· Dimensions in ( ) are for C (normally closed) specifications.

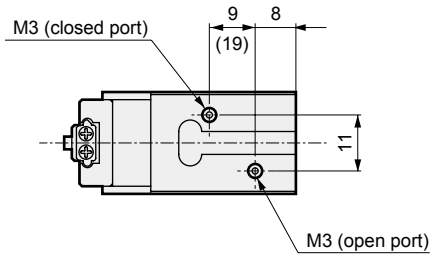

● With switch

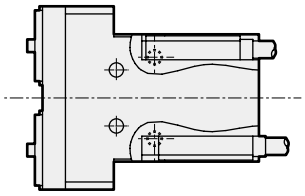

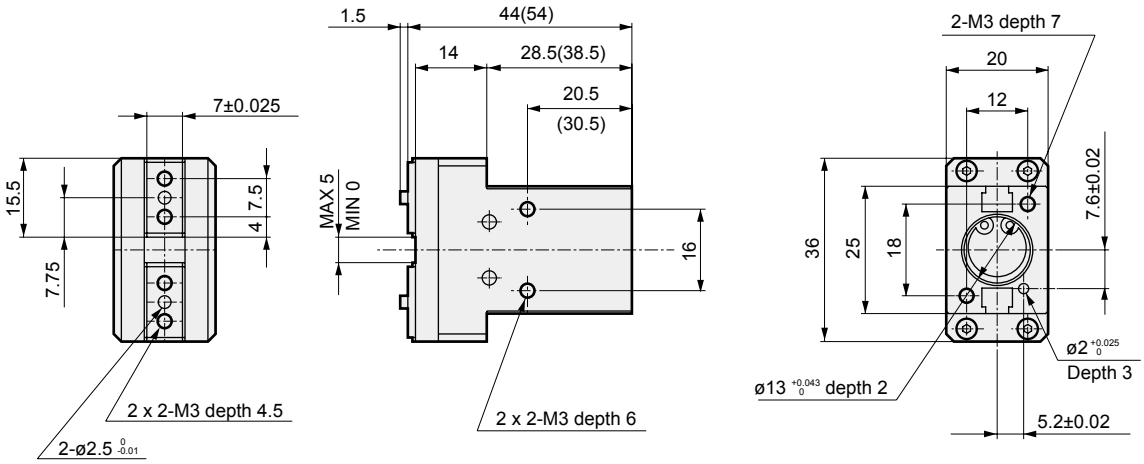

LCM
LCR
LCG
LCW
LCX
STM
STG
STS/STL
STR2
UCA2
ULK*
JSK/M2
JSG
JSC3/JSC4
USSD
UFCD
USC
UB
JSB3
LMB
LML
HCM
HCA
LBC
CAC4
UCAC2
CAC-N
UCAC-N
RCS2
RCC2
PCC
SHC
MCP
GLC
MFC
BBS
RRC
GRC
RV3*
NHS
HRL
LN
Hand
Chuk
MecHnd/Chuk
ShkAbs
FJ
FK
SpdContr
Ending
LSH-HP
LSH
FH100
BSA2
BHA/BHG
LHA
LHAG
HAP
HKP
HCP
HGP
HLF2
HLA/HLB
HLAG/HLBG
HLC
HLD
HMF
HMF-G
HMFB
HFP
FH500
HBL
HJL
HMD
HDL
HJD
BHE

Dimensions

● LHA-03CS standard/O/C

· Dimensions in ( ) are for C (normally closed) specifications.

● With switch

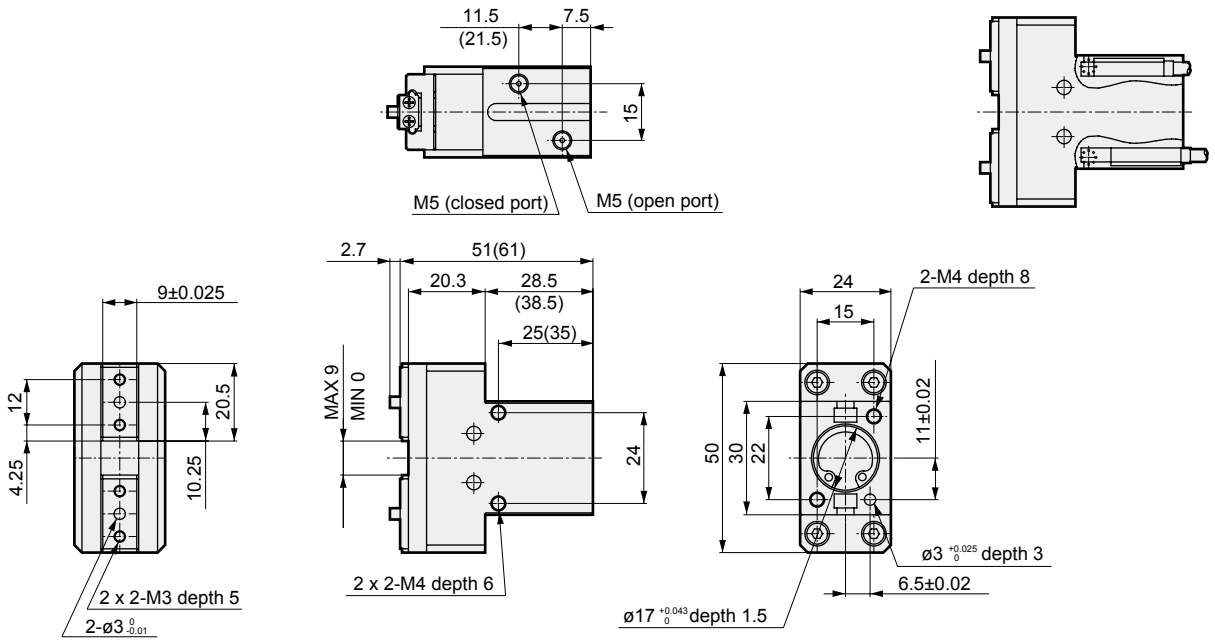

● LHA-04CS standard/O/C

· Dimensions in ( ) are for C (normally closed) specifications.

● With switch

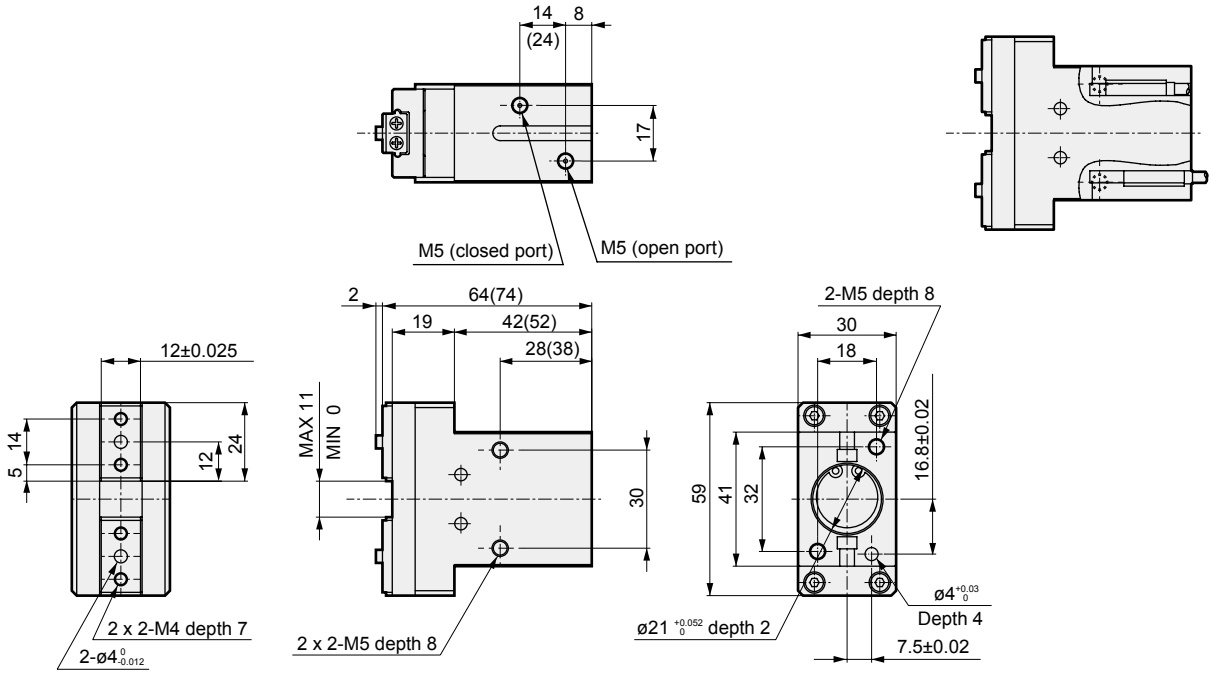

Dimensions

● LHA-05CS standard/O/C
· Dimensions in ( ) are for C (normally closed) specifications.

● With switch

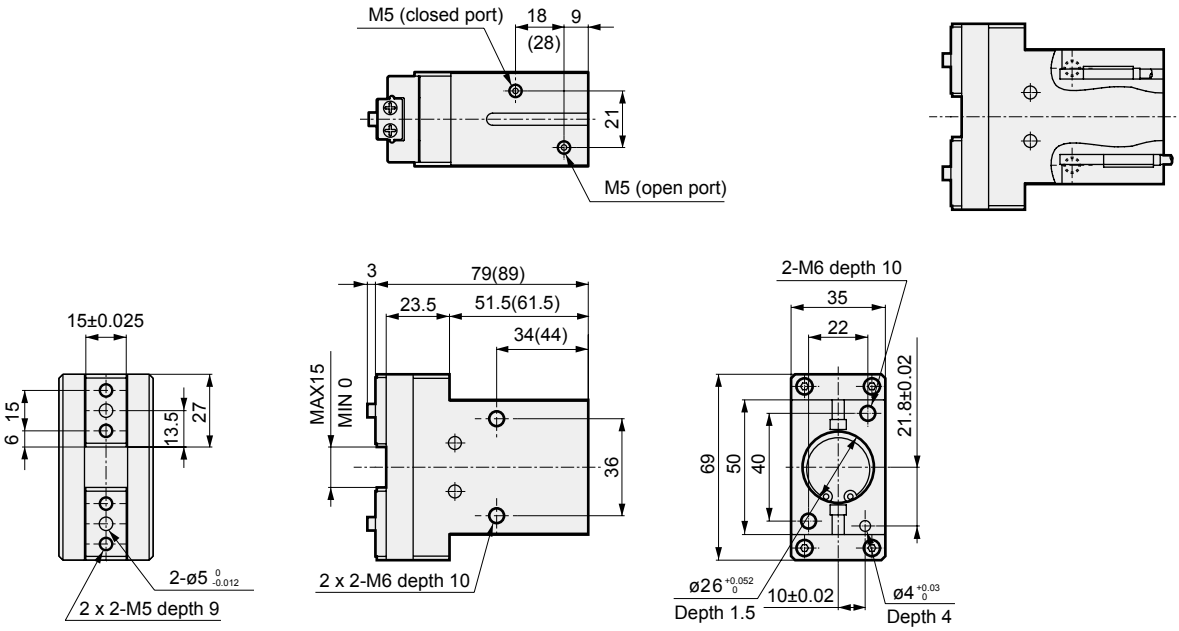

● LHA-06CS standard/O/C
· Dimensions in ( ) are for O (normally open) and C (normally closed) specifications.

● With switch

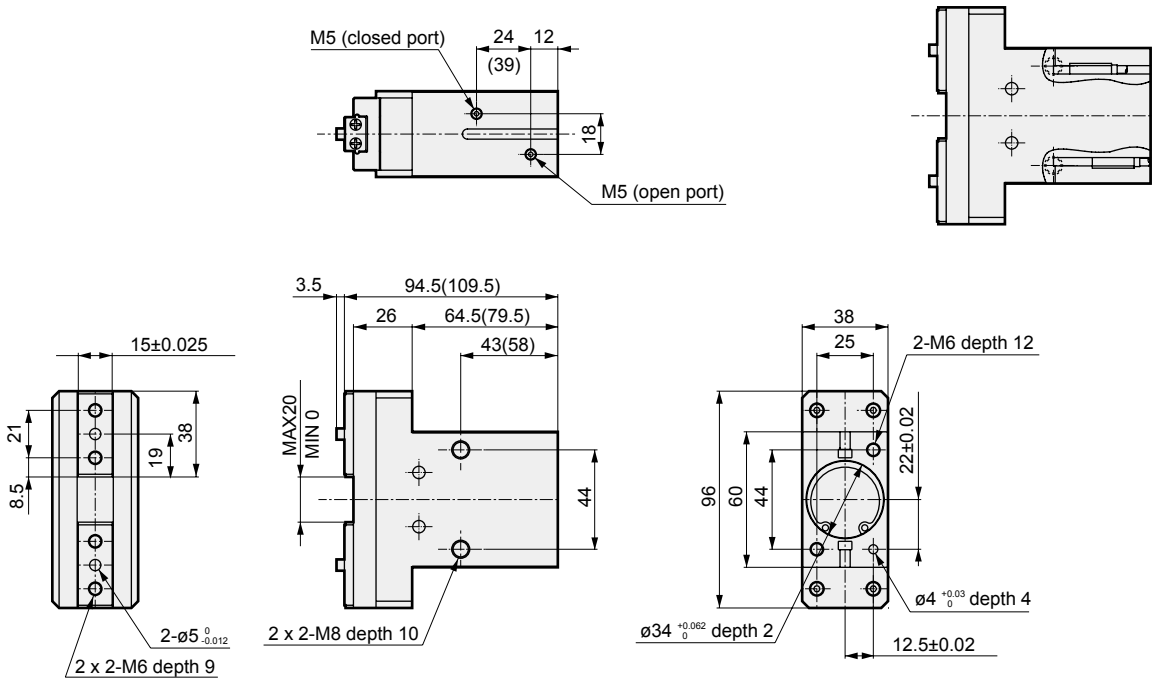

Linear guide hand with rubber cover Double acting/single acting

LHAG Series

● Operating stroke length: 5, 9, 11, 15, 20 mm

Double acting

Single acting (normally open)

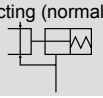

Single acting (normally closed)

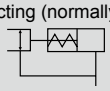

RoHS CAD

Specifications

Item		LHAG				
Size		01CS	03CS	04CS	05CS	06CS
Bore size	mm	ø12	ø16	ø20	ø25	ø32
Actuation		Double acting/single acting				
Working fluid		Compressed air				
Max. working pressure	MPa	0.7 (≈100 psi, 7 bar)				
Min. working pressure MPa	Double acting	0.2 (≈29 psi, 2 bar)				
	Single acting	0.3 (≈44 psi, 3 bar)				
Ambient temperature	°C	5 (41°F) to 60 (140°F)				
Port size		M3		M5		
Operating stroke length	mm	5	9	11	15	20
Rod diameter	mm	ø6	ø8	ø10	ø12	ø16
Volumetric capacity (reciprocating)	cm^3	0.32	1.58	2.89	6.32	14.07
Repeatability	mm	±0.01				
Weight	kg	0.09	0.17	0.37	0.57	0.9
Lubrication		Not required (use turbine oil class 1 ISO VG32 if necessary for lubrication)				

Switch specifications

Item	Proximity 2-wire	Proximity 3-wire
	T2H/V	T3H/V
Applications	Dedicated for programmable controller	For programmable controller, relay
Output method	-	NPN output
Power supply voltage	-	10 to 28 VDC
Load voltage/current	10 to 30 VDC, 5 to 20 mA (*1)	30 VDC or less, 100 mA or less
Indicator lamp	LED (Lit when ON)	
Leakage current	1 mA or less	10 μA or less
Weight	1 m:18 g 3 m:49 g 5 m:80 g	

*1 : The above max. load current is 20 mA at 25°C. The current is lower than 20 mA if the operating ambient temperature around the switch is higher than 25˚C. (5 to 10 mA at 60˚C)

*2 : Refer to Ending Page 1 for detailed switch specifications and dimensions.

How to order

Without switch (built-in magnet for switch)

LHAG - 03CS - O

With switch (built-in magnet for switch)

LHAG - 03CS - O - T2H - R

Model No.

Ⓐ Size

Ⓑ Option

Ⓒ Switch model No.
* indicates the lead wire length.

Ⓓ Switch quantity

Code	Description
Ⓐ Size	
01CS	
03CS	
04CS	
05CS	
06CS	
Ⓑ Option	
Blank	Standard (double acting with nitrile rubber guard)
O	Single acting (normally open)
C	Single acting (normally closed)
F	Fluoro rubber guard
T	Silicone rubber guard

Ⓒ Switch model No.

Axial lead wire	Radial lead wire	Contact	Voltage AC	Voltage DC	Display	Lead wire
T2H*	T2V*	Proximity		●	1-color	2-wire
T3H*	T3V*			●	display	3-wire

* Lead wire length	
Blank	1 m (standard)
3	3 m (option)
5	5 m (option)

Ⓓ Switch quantity	
R	1 on open side
H	1 on closed side
D	2

[Example of model No.]

LHAG-03CS-O-T2H-R

Model : Linear guide hand with rubber cover

Ⓐ Size : 03CS
Ⓑ Option : Single acting, normally open type
Ⓒ Switch model No.: Proximity T2H switch, lead wire 1 m
Ⓓ Switch quantity : 1 on open side

How to order switch

SW - T2H*

Switch model No.
(Item Ⓒ above)

Specifications for rechargeable battery

(Catalog No. CC-1226A)

LHAG - … - P4*

● Design compatible with rechargeable battery manufacturing process.

* Contact CKD for details.

LCM
LCR
LCG
LCW
LCX
STM
STG
STS/STL
STR2
UCA2
ULK*
JSK/M2
JSG
JSC3/JSC4
USSD
UFCD
USC
UB
JSB3
LMB
LML
HCM
HCA
LBC
CAC4
UCAC2
CAC-N
UCAC-N
RCS2
RCC2
PCC
SHC
MCP
GLC
MFC
BBS
RRC
GRC
RV3*
NHS
HRL
LN
Hand
Chuk
MecHnd/Chuk
ShkAbs
FJ
FK
SpdContr
Ending
LSH-HP
LSH
FH100
BSA2
BHA/BHG
LHA
LHAG
HAP
HKP
HCP
HGP
HLF2
HLA/HLB
HLAG/HLBG
HLC
HLD
HMF
HMF-G
HMFB
HFP
FH500
HBL
HJL
HMD
HDL
HJD
BHE

Internal structure and parts list

● LHAG-01CS to 05CS

Standard (double acting)/0 (normally open)

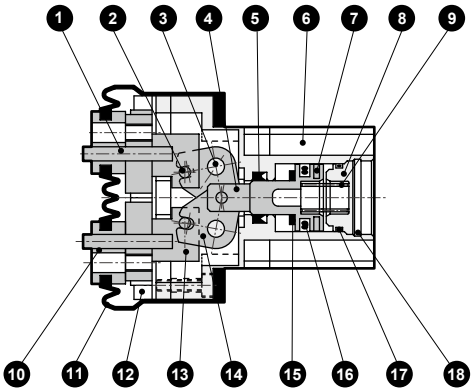

C (normally closed)

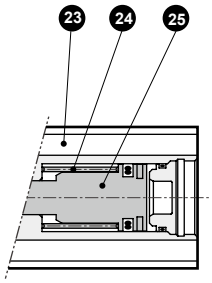

● LHAG-06CS

Standard (double acting)

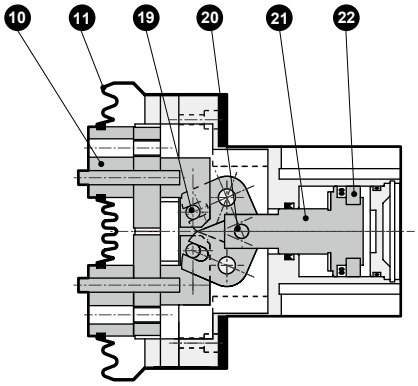

O (normally open)

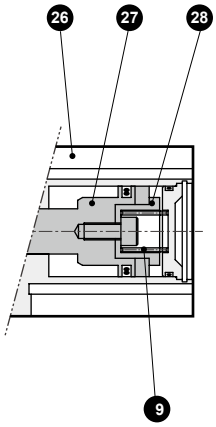

C (normally closed)

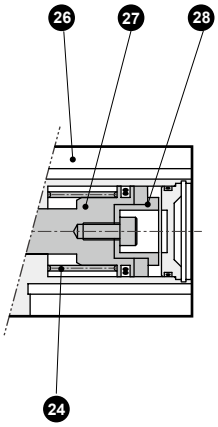

Cannot be disassembled

No.	Part name	Material	Remarks	No.	Part name	Material	Remarks
1	Positioning pin	Alloy steel		15	Cushion	Urethane seat	
2	Operation shaft	Alloy steel		16	Piston seal	Nitrile rubber	
3	Fulcrum axis	Alloy steel		17	Cylinder sealant	Nitrile rubber	
4	Piston	Stainless steel		18	C type snap ring	Stainless steel	
5	Rod sealant	Nitrile rubber		19	Operation shaft B	Alloy steel	
6	Body	Aluminum alloy		20	Operation shaft A	Steel	
7	Semicircle magnet			21	Piston	Stainless steel/aluminum alloy	
8	Cylinder guard	Acetal resin		22	Magnet		
9	NO Spring	Stainless steel		23	NC Body	Aluminum alloy	
10	Main finger for rubber covers	Stainless steel		24	NC Spring	Stainless steel	
11	Rubber cover	Nitrile rubber		25	NC Piston	Stainless steel	
12	Linear guide			26	NO, NC Body	Aluminum alloy	
13	Master plate	Stainless steel		27	NO, NC Piston A	Stainless steel	
14	Arm	Stainless steel		28	Piston B	Acetal resin	

Gripping power performance data

- Gripping power represents the thrust (per one finger) in the arrow direction shown in the figure.
- The gripping power in the opening/closing directions with finger length L of hand with a supply pressure of 0.3, 0.5 and 0.7 MPa is shown.
  - ·Open direction (⇦) - - - - - - - - - - - - (shown with broken line)
  - ·Closed direction (➡) ———————— (shown with continuous line)

(Note) O type gripping power decreases approximately 20 to 30% in the closed direction compared to double acting.
C type gripping power decreases approximately 10 to 20% in the open direction compared to the double acting.
When making a selection, read the precautions for design and selection on page 1764.

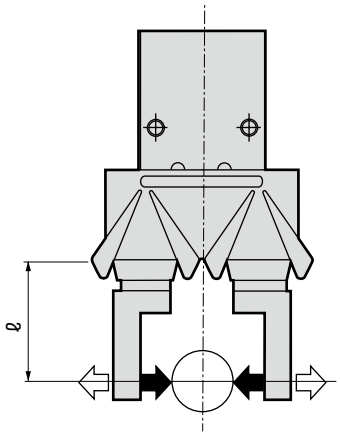

● LHAG-01CS

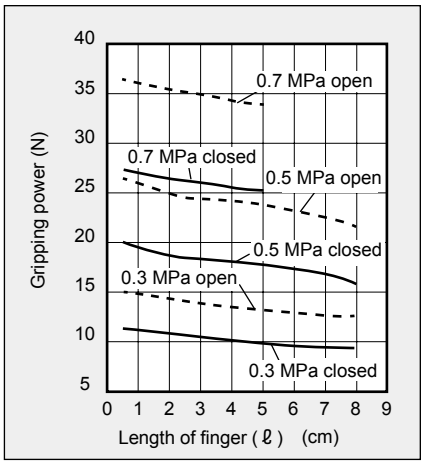

● LHAG-03CS

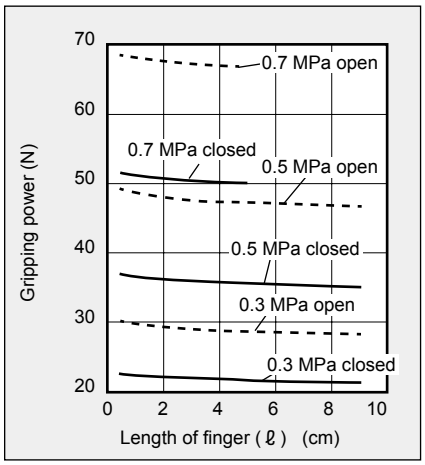

● LHAG-04CS

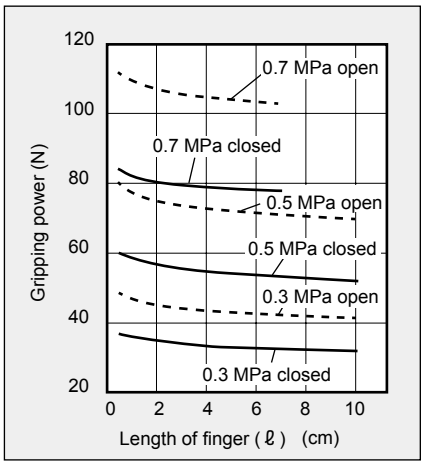

● LHAG-05CS

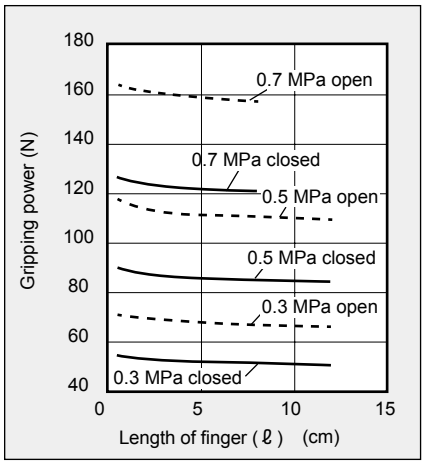

● LHAG-06CS

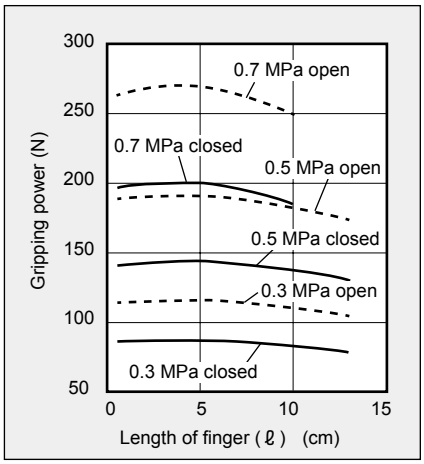

LCM
LCR
LCG
LCW
LCX
STM
STG
STS/STL
STR2
UCA2
ULK*
JSK/M2
JSG
JSC3/JSC4
USSD
UFCD
USC
UB
JSB3
LMB
LML
HCM
HCA
LBC
CAC4
UCAC2
CAC-N
UCAC-N
RCS2
RCC2
PCC
SHC
MCP
GLC
MFC
BBS
RRC
GRC
RV3*
NHS
HRL
LN
Hand
Chuk
MecHnd/Chuk
ShkAbs
FJ
FK
SpdContr
Ending
LSH-HP
LSH
FH100
BSA2
BHA/BHG
LHA
LHAG
HAP
HKP
HCP
HGP
HLF2
HLA/HLB
HLAG/HLBG
HLC
HLD
HMF
HMF-G
HMFB
HFP
FH500
HBL
HJL
HMD
HDL
HJD
BHE

Dimensions

● LHAG-01CS standard/O/C

· Dimensions in ( ) are for C (normally closed) specifications.

● With switch

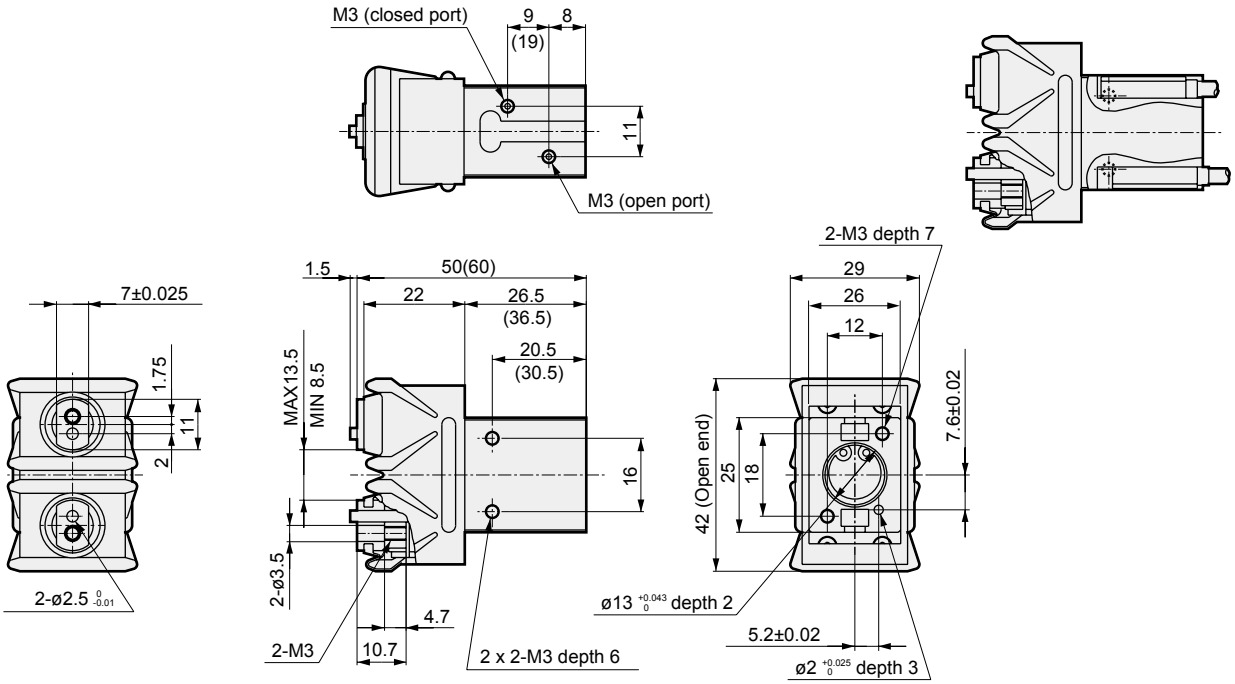

● LHAG-03CS standard/O/C

· Dimensions in ( ) are for C (normally closed) specifications.

● With switch

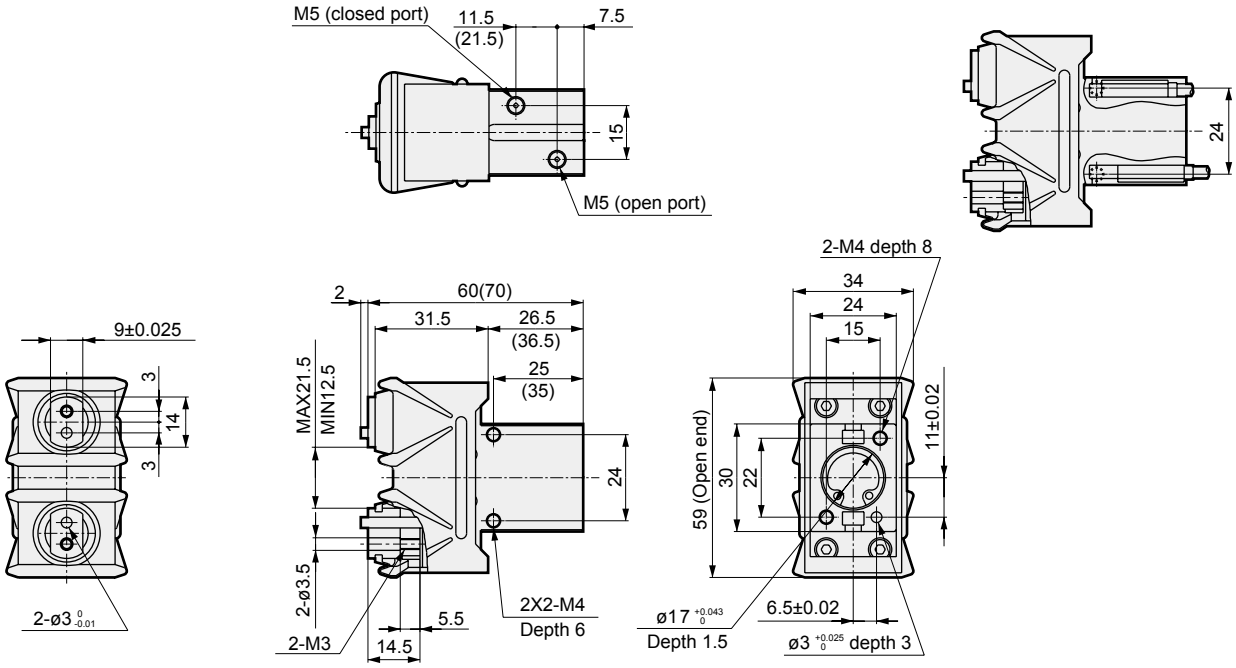

Dimensions

● LHAG-04CS standard/O/C
· Dimensions in ( ) are for C (normally closed) specifications.

● With switch

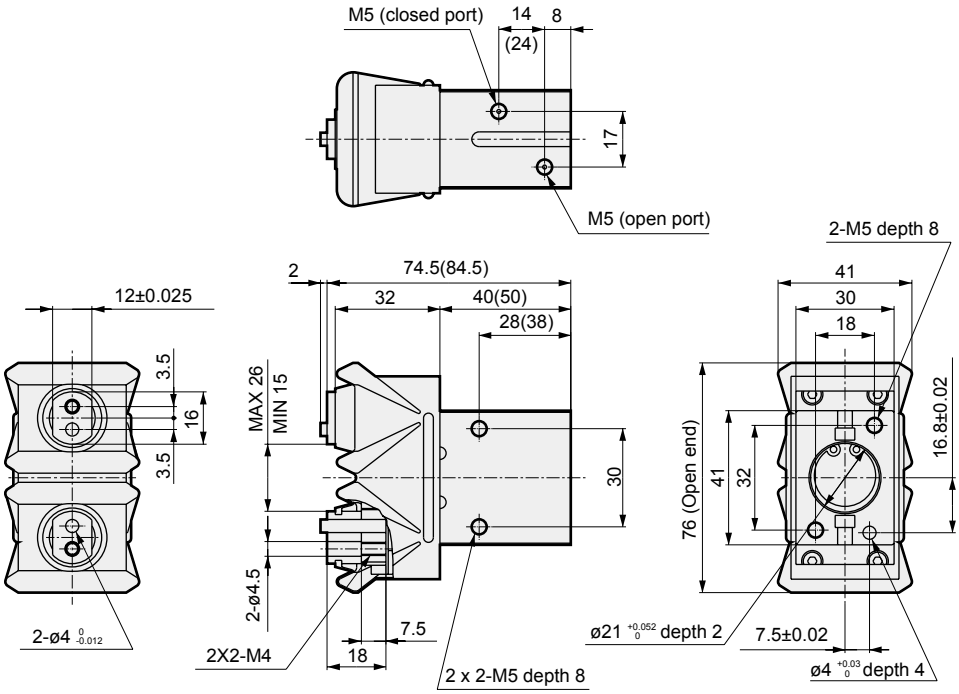

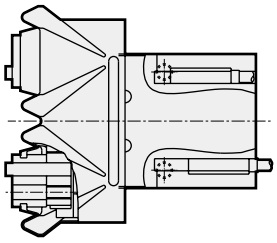

● LHAG-05CS standard/O/C
· Dimensions in ( ) are for C (normally closed) specifications.

● With switch

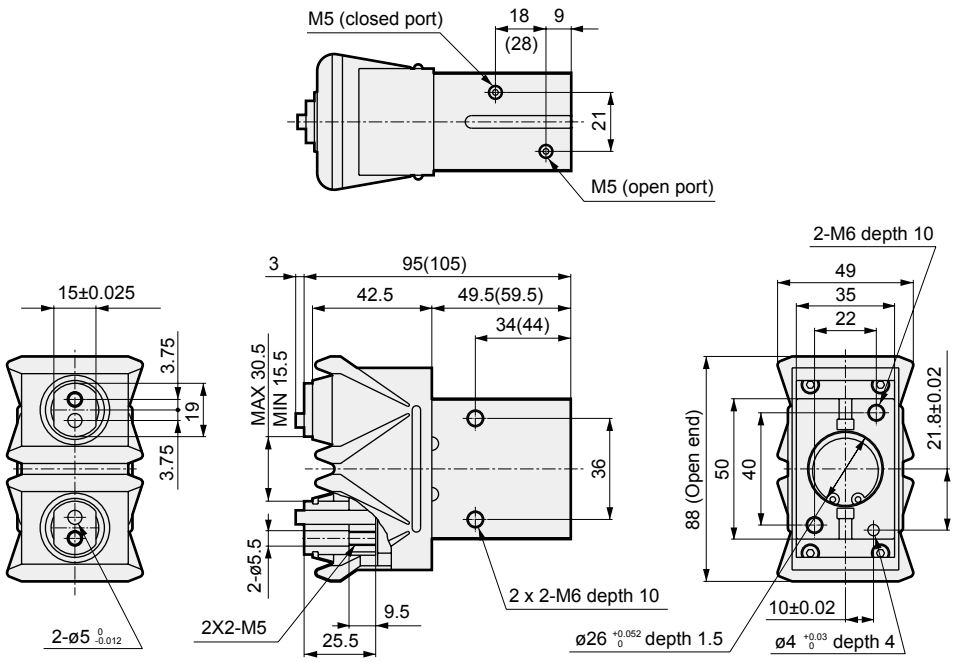

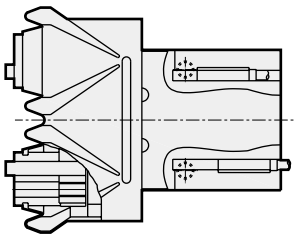

LCM
LCR
LCG
LCW
LCX
STM
STG
STS/STL
STR2
UCA2
ULK*
JSK/M2
JSG
JSC3/JSC4
USSD
UFCD
USC
UB
JSB3
LMB
LML
HCM
HCA
LBC
CAC4
UCAC2
CAC-N
UCAC-N
RCS2
RCC2
PCC
SHC
MCP
GLC
MFC
BBS
RRC
GRC
RV3*
NHS
HRL
LN
Hand
Chuk
MecHnd/Chuk
ShkAbs
FJ
FK
SpdContr
Ending
LSH-HP
LSH
FH100
BSA2
BHA/BHG
LHA
LHAG
HAP
HKP
HCP
HGP
HLF2
HLA/HLB
HLAG/HLBG
HLC
HLD
HMF
HMF-G
HMFB
HFP
FH500
HBL
HJL
HMD
HDL
HJD
BHE

Dimensions CAD

● LHAG-06CS standard/O/C

· Dimensions in ( ) are for O (normally open) and C (normally closed) specifications.

● With switch

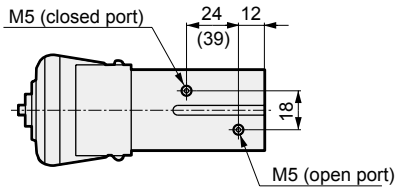

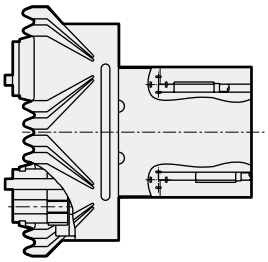

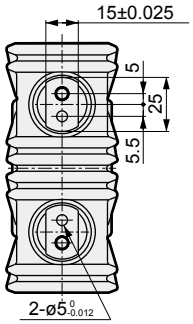

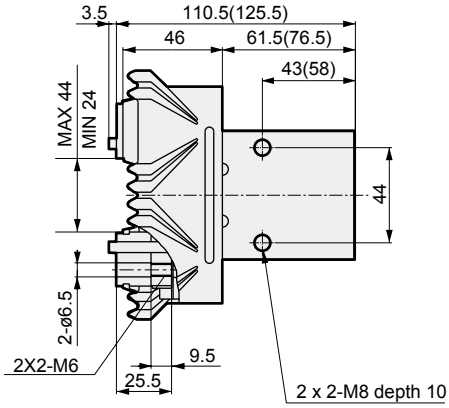

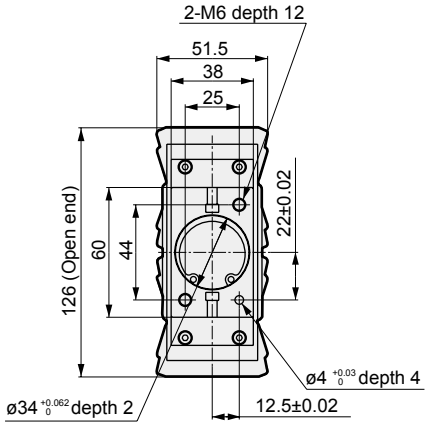

MEMO

Parallel hand Double acting/single acting

HAP-1C Series

● Operational stroke: 8 mm

Double acting | Single acting (normally open) | Single acting (normally closed)

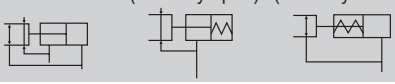

RoHS CAD

Specifications

1 MPa ≈ 145.0 psi, 1 MPa = 10 bar

Item		HAP
Size		1C
Bore size	mm	ø15
Actuation		Double acting/single acting
Working fluid		Compressed air
Max. working pressure	MPa	0.7 (≈101 psi, 7 bar)
Min. working pressure	MPa	0.3 (≈44 psi, 3 bar)
Ambient temperature	°C	5 (41°F) to 60 (140°F)
Port size		M5
Operating stroke	mm	8
Rod diameter	mm	ø8
Volumetric capacity (reciprocating)	cm^3	2.1
Repeatability	mm	±0.03
Weight	kg	0.10
Lubrication		Not required (use turbine oil class 1 ISO VG32 if necessary for lubrication)

How to order

HAP - 1C - 0

Ⓐ Size *1

Ⓑ Option *2

Code	Description
Ⓐ Size	
1C	
Ⓑ Option	
Blank	Standard (double acting)
O	Single acting (normally open)
C	Single acting (normally closed)
Y1	With attachment (S50C)
Y2	With attachment (MC nylon)

⚠ Precautions for model No. selection

*1: Switch cannot be installed onto HAP-1C.
*2: Refer to pages 1762 and 1763 for the dimensions and compatible models of the attachment.
When ordered as an option, two are included at shipment.

[Example of model No.]

HAP-1C-0

Model: Parallel hand
Ⓐ Size : 1C
Ⓑ Option : Single acting, normally open

Specifications for rechargeable battery

(Catalog No. CC-1226A)

HAP - ... - P4*

● Design compatible with rechargeable battery manufacturing process.

* Contact CKD for details.

Internal structure and parts list

● Standard (double acting)/O (normally open)

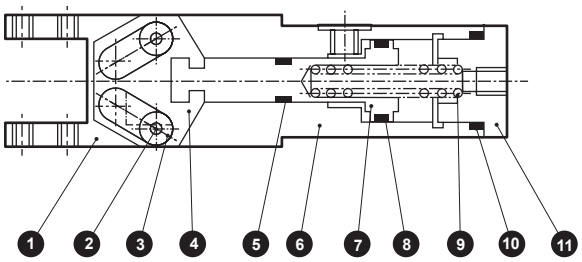

● C (normally closed)

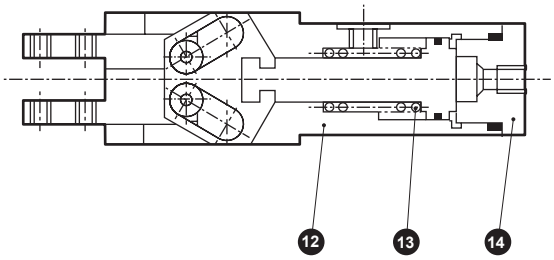

Cannot be disassembled

* Standard (double acting) type does not contain a ❾ spring.

No	Part name	Material	Remarks	No	Part name	Material	Remarks
1	Finger	Steel alloy		8	Piston packing	Nitrile rubber	
2	Fulcrum axis	Steel alloy		9	Spring	Steel	O type only
3	Bearing	Steel alloy		10	Cylinder gasket	Nitrile rubber	
4	Cam	Stainless steel		11	Head cover	Aluminum alloy	
5	Rod packing	Nitrile rubber		12	Body	Aluminum alloy	
6	Body	Aluminum alloy		13	Spring	Steel	
7	Piston	Stainless steel		14	Head cover	Aluminum alloy	

Gripping force performance data

- Gripping force represents the thrust (per finger) in the arrow direction shown in the figure.
- The gripping force in the opening/closing directions with finger length ℓ of the hand with a supply pressure of 0.3, 0.5 and 0.7 MPa is shown.
  - ● Open direction (⇦) ----- (shown with broken line)
  - ● Closed direction (➡) —— (shown with continuous line)

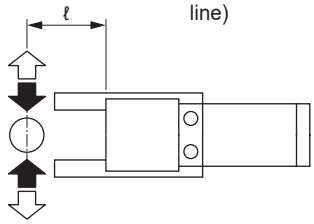

● HAP-1C

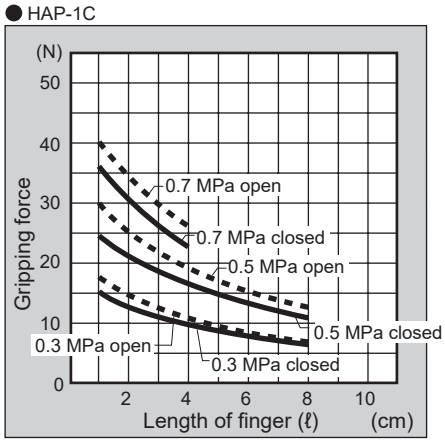

(Note) • O type gripping force decreases approximately 20 to 30% in the closed direction compared to double acting.
• C type gripping force decreases approximately 10 to 20% in the open direction compared to double acting.
For selection, see page 1764 for design and selection precautions.

Dimensions CAD

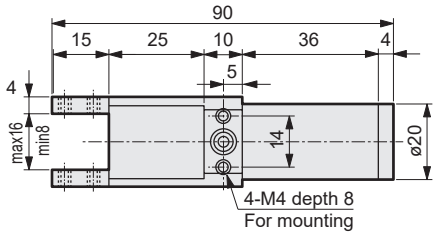

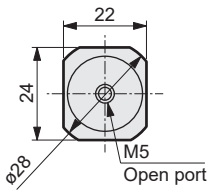

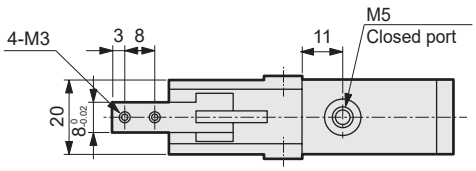

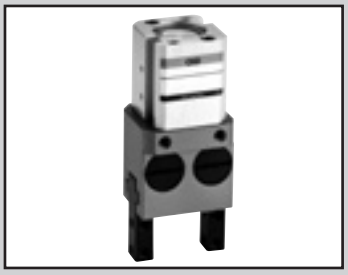

Parallel hand Double acting/single acting

HAP- 2 to 4 CS Series

● Operating stroke: 16, 26, 41 mm

Double acting | Single acting (normally open) | Single acting (normally closed)

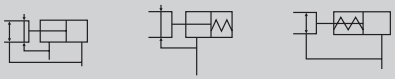

RoHS CAD

Specifications

1 MPa ≈ 145.0 psi, 1 MPa = 10 bar

Item		HAP		
Size		2CS	3CS	4CS
Bore size	mm	ø20	ø25	ø40
Actuation		Double acting/single acting		
Working fluid		Compressed air		
Max. working pressure	MPa	0.7 (≈101 psi, 7 bar)		
Min. working pressure	MPa	0.3 (≈44 psi, 3 bar)		
Ambient temperature	°C	5 (41°F) to 60 (140°F)		
Port size		M5		Rc1/8
Operating stroke	mm	16	26	41
Rod diameter	mm	ø10	ø14	ø16
Volumetric capacity (reciprocating)	cm^3	4.4	10.8	47.4
Repeatability	mm	±0.03		
Weight	kg	0.28	0.58	1.52
Lubrication		Not required (use turbine oil class 1 ISO VG32 if necessary for lubrication)		

Switch specifications

Item	Proximity 2-wire	Proximity 3-wire
	T2H/V	T3H/V
Applications	Dedicated for programmable controller	For programmable controller, relay
Output method	–	NPN output
Power supply voltage	–	10 to 28 VDC
Load voltage/current	10 to 30 VDC, 5 to 20 mA (*1)	30 VDC or less, 100 mA or less
Indicator lamp	LED (Lit when ON)	
Leakage current	1 mA or less	10 μa or less
Weight	1 m: 18 g 3 m: 49 g 5 m: 80 g *3	

*1:The above max. load current is 20 mA at 25°C. The current is lower than 20 mA if the operating ambient temperature around the switch is higher than 25˚C. (5 to 10 mA at 60˚C)

*2: Refer to Ending Page 1 for detailed switch specifications and dimensions.

*3: The weight of switch mounting bracket is 1.5 g.

How to order

Without switch (built-in magnet for switch)

HAP - 2CS - O

With switch (built-in magnet for switch)

HAP - 2CS - O - T2H - R

Ⓐ Size

Ⓑ Option *1

Ⓒ Switch model No.
* indicates the lead wire length.

Ⓓ Switch quantity

Code	Description
Ⓐ Size	
2CS	
3CS	
4CS	

Ⓑ Option	
Blank	Standard (double acting)
O	Single acting (normally open)
C	Single acting (normally closed)
Y1	With attachment (S50C)
Y2	With attachment (MC nylon)

Ⓒ Switch model No.

Straight Lead wire	L-shaped Lead wire	Contact	Voltage AC	Voltage DC	Indicator	Lead wire
T2H*	T2V*	Proximity		●	1-color	2-wire
T3H*	T3V*			●	LED	3-wire

*** Lead wire length**	
Blank	1 m (standard)
3	3 m (option)
5	5 m (option)

Ⓓ Switch quantity	
R	1 on open side
H	1 on closed side
D	2

⚠ Precautions for model No. selection

*1: Refer to pages 1762 and 1763 for the dimensions and compatible models of the attachment. When ordered as an option, two are included at shipment.

[Example of model No.]

HAP-2CS-O-T2H-R

Model: Parallel hand
Ⓐ Size: 2CS
Ⓑ Option: Single acting, normally open type
Ⓒ Switch model No.: Proximity T2H switch, lead wire 1 m
Ⓓ Switch quantity: 1 on open side

How to order switch

● For switch T*H*

• Switch body + mounting bracket set

HAP - T2H

Switch model No.
(Item Ⓒ above)

• Switch body

SW - T2H

Switch model No.
(Item Ⓒ above)

• Mounting bracket set

HAP - T

● For switch T*V*

• Switch body + mounting bracket set

HAP - T2V - *

Switch model No.
(Item Ⓒ above)

• Switch body

SW - T2V

Switch model No.
(Item Ⓒ above)

• Mounting bracket set

HAP - TV - *

(Specify either R (open side) or H (closed side) for *. However, if the size is 2CS, specify H (closed side) regardless of the switch mounting position.

Specifications for rechargeable battery (Catalog No. CC-1226A)

HAP - ... - P4*

● Design compatible with rechargeable battery manufacturing process.

* Contact CKD for details.

LCM
LCR
LCG
LCW
LCX
STM
STG
STS/STL
STR2
UCA2
ULK*
JSK/M2
JSG
JSC3/JSC4
USSD
UFCD
USC
UB
JSB3
LMB
LML
HCM
HCA
LBC
CAC4
UCAC2
CAC-N
UCAC-N
RCS2
RCC2
PCC
SHC
MCP
GLC
MFC
BBS
RRC
GRC
RV3*
NHS
HRL
LN
Hand
Chuk
MecHnd/Chuk
ShkAbs
FJ
FK
SpdContr
Ending
LSH-HP
LSH
FH100
BSA2
BHA/BHG
LHA
LHAG
HAP
HKP
HCP
HGP
HLF2
HLA/HLB
HLAG/HLBG
HLC
HLD
HMF
HMF-G
HMFB
HFP
FH500
HBL
HJL
HMD
HDL
HJD
BHE

Internal structure and parts list

● Standard (double acting)/O (normally open)

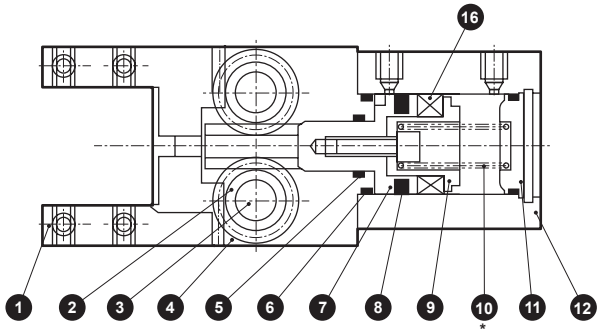

● C (normally closed)

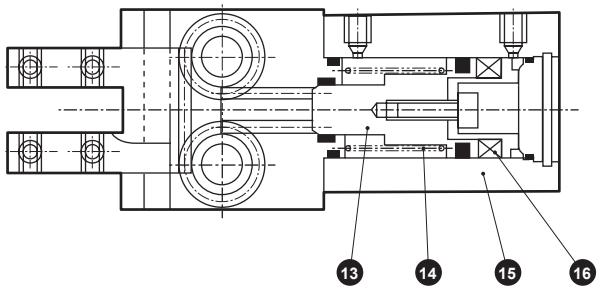

Cannot be disassembled

* Standard (double acting) type does not contain a ⑩ spring.

No.	Part name	Material	Remarks	No.	Material	Part name	Remarks
1	Finger	Steel		9	Piston B	Acetal resin	
2	Pinion gear	Steel		10	Spring	Stainless steel	O type only
3	Pinion gear shaft	Steel		11	Cylinder guard	Acetal resin	
4	Body	Aluminum alloy		12	Cylinder	Aluminum alloy	
5	Rod packing	Nitrile rubber		13	Piston	Stainless steel	
6	Cylinder gasket	Nitrile rubber		14	Spring	Stainless steel	
7	Piston A	Stainless steel		15	Cylinder	Aluminum alloy	
8	Piston packing	Nitrile rubber		16	Magnet	Plastic magnet	

Gripping force performance data

- Gripping force represents the thrust (per finger) in the arrow direction shown in the figure.
- The gripping force in the opening/closing directions with finger length ℓ of the hand with a supply pressure of 0.3, 0.5 and 0.7 MPa is shown.
  - ● Open direction (⇦) -------- (shown with broken line)
  - ● Closed direction (➡) —— (shown with continuous line)

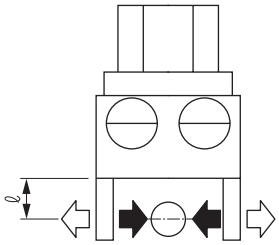

(Note) O type gripping force decreases approximately 20 to 30% in the closed direction compared to double acting.
C type gripping force decreases approximately 10 to 20% in the open direction compared to double acting.
For selection, see page 1764 for design and selection precautions.

● HAP-2CS

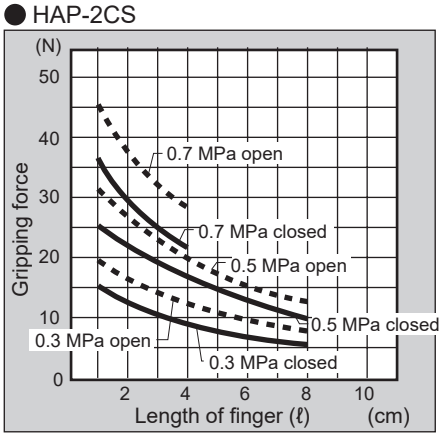

● HAP-3CS

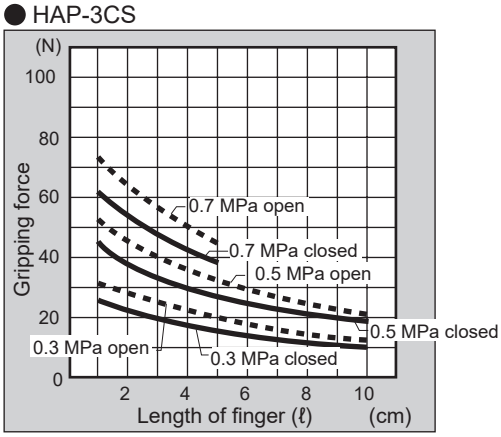

● HAP-4CS

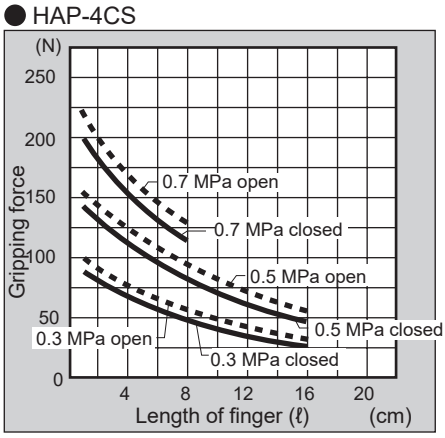

Dimensions

● HAP-2CS Standard/O/C

● Dimensions in ( ) are for C [normally closed] specifications.

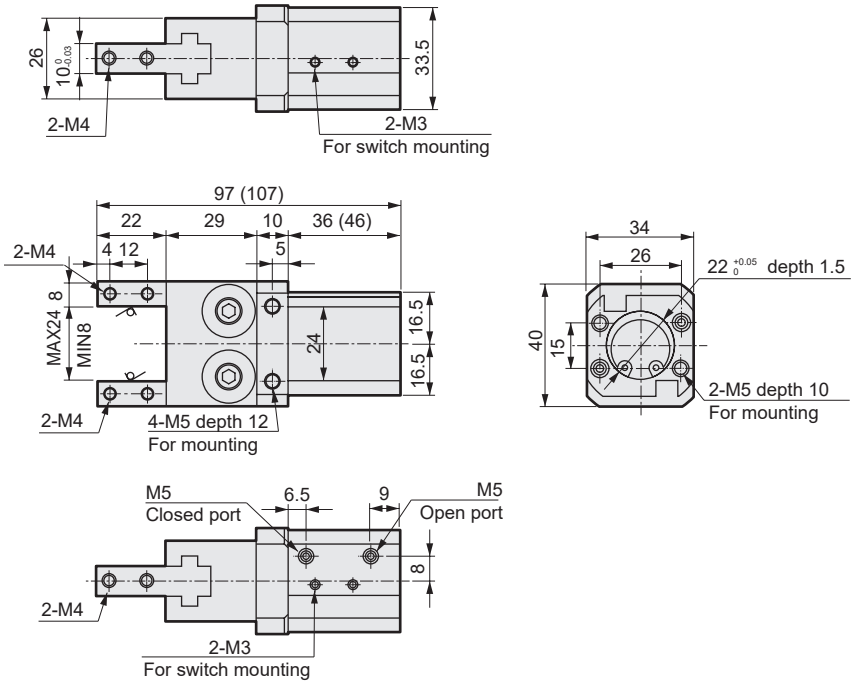

● With switch

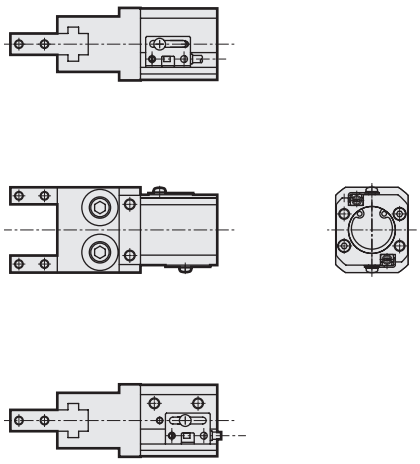

● HAP-3CS Standard/O/C

● Dimensions in ( ) are for C [normally closed] specifications.

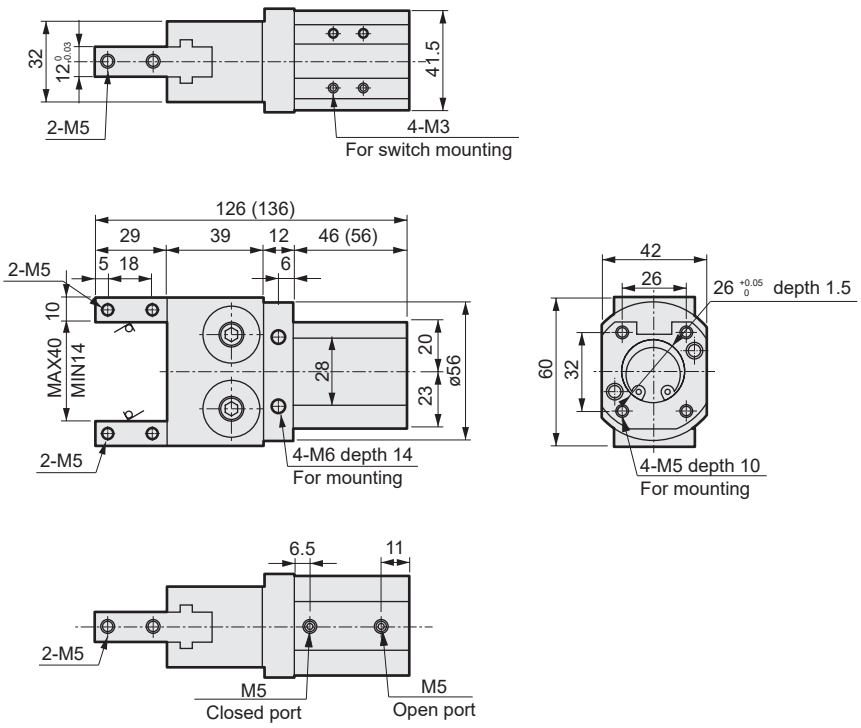

● With switch

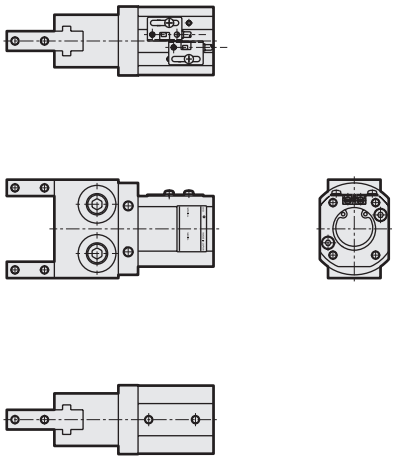

LCM
LCR
LCG
LCW
LCX
STM
STG
STS/STL
STR2
UCA2
ULK*
JSK/M2
JSG
JSC3/JSC4
USSD
UFCD
USC
UB
JSB3
LMB
LML
HCM
HCA
LBC
CAC4
UCAC2
CAC-N
UCAC-N
RCS2
RCC2
PCC
SHC
MCP
GLC
MFC
BBS
RRC
GRC
RV3*
NHS
HRL
LN
Hand
Chuk
MecHnd/Chuk
ShkAbs
FJ
FK
SpdContr
Ending
LSH-HP
LSH
FH100
BSA2
BHA/BHG
LHA
LHAG
HAP
HKP
HCP
HGP
HLF2
HLA/HLB
HLAG/HLBG
HLC
HLD
HMF
HMF-G
HMFB
HFP
FH500
HBL
HJL
HMD
HDL
HJD
BHE

Dimensions

● HAP-4CS Standard/O/C

● Dimensions in ( ) are for C [normally closed] specifications.

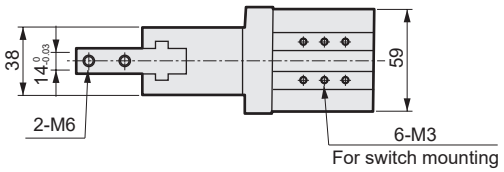

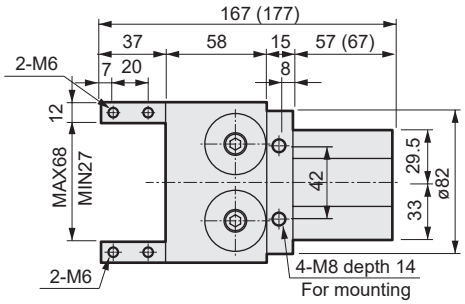

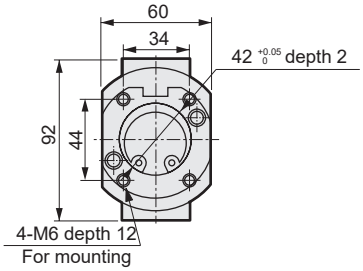

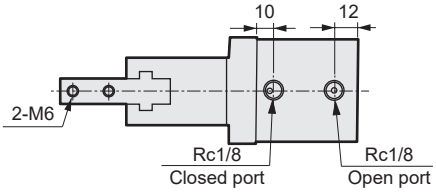

● With switch

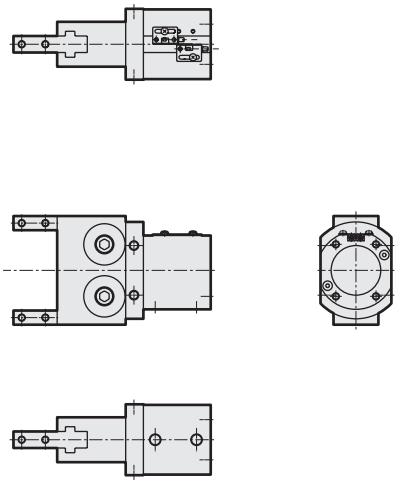

MEMO

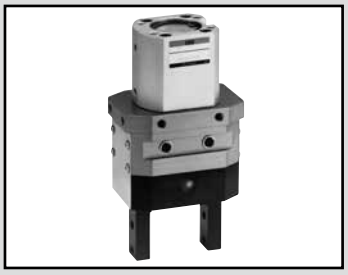

Cross roller parallel hand Double acting/single acting

HKP Series

● Operating stroke length: 24, 30, 36, 40, 60 mm

Double acting

Single acting (normally open)

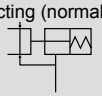

Single acting (normally closed)

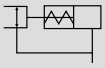

Specifications

Item		HKP				
Size		32CS	40CS	50CS	63CS	80CS
Bore size	mm	ø32	ø40	ø50	ø63	ø80
Actuation		Double acting/single acting				Double acting
Working fluid		Compressed air				
Max. working pressure	MPa	0.7 (≈100 psi, 7 bar)				
Min. working pressure Note MPa	Double acting	0.1 (≈15 psi, 1 bar)				0.3 (≈44 psi, 3 bar)
	Normally open	0.3 (≈44 psi, 3 bar)				-
	Normally closed					
Ambient temperature	°C	5 (41°F) to 60 (140°F)				
Port size		M5	Rc1/8			Rc1/4
Operating stroke length	mm	24	30	36	40	60
Rod diameter	mm	ø16	ø20	ø28	ø32	ø16
Volumetric capacity (reciprocating)	cm^3	25.3	49.5	89.4	162.9	354.5
Repeatability	mm	±0.01				
Weight	kg	1.36	1.95	4.2	5.4	10.6
Lubrication		Not required (use turbine oil class 1 ISO VG32 if necessary for lubrication)				

Note : When a rubber cover (option) is attached, the min. working pressure is 0.15 MPa for double acting and 0.35 MPa for normally open/normally closed.

Switch specifications

Item	Proximity 2-wire	Proximity 3-wire
	T2H/V	T3H/V
Applications	Dedicated for programmable controller	For programmable controller, relay
Output method	-	NPN output
Power supply voltage	-	10 to 28 VDC
Load voltage/current	10 to 30 VDC, 5 to 20 mA (*1)	30 VDC or less, 100 mA or less
Indicator lamp	LED (Lit when ON)	
Leakage current	1 mA or less	10 μA or less
Weight	1 m:18 g 3 m:49 g 5 m:80 g *3	

*1 : The above max. load current is 20 mA at 25°C. The current is lower than 20 mA if the operating ambient temperature around the switch is higher than 25˚C. (5 to 10 mA at 60˚C)

*2 : Refer to Ending Page 1 for detailed switch specifications and dimensions.

*3 : The weight of switch mounting bracket is 1.5 g.

How to order

Without switch (built-in magnet for switch)

HKP - 32CS - O

With switch (built-in magnet for switch)

HKP - 32CS - O - T2H - R

Ⓐ Size

Ⓑ Option

Ⓒ Switch model No.

Ⓓ Switch quantity

Code	Description
Ⓐ Size	
32CS	
40CS	
50CS	
63CS	
80CS	

Ⓑ Option

	Size	32CS	40CS	50CS	63CS	80CS
Blank	Standard (double acting)	●	●	●	●	●
O	Single acting (normally open)	●	●	●	●	
C	Single acting (normally closed)	●	●	●	●	
G	With rubber cover (nitrile rubber)	●	●	●	●	

Ⓒ Switch model No.

Axial lead wire	Radial lead wire	Contact	Voltage AC	Voltage DC	Display	Lead wire
T2H*	**T2V***	Proximity		●	1-color display	2-wire
T3H*	**T3V***			●		3-wire

*** Lead wire length**

Blank	1 m (standard)
3	3 m (option)
5	5 m (option)

Ⓓ Switch quantity

R	1 on open side
H	1 on closed side
D	2

[Example of model No.]

HKP-32CS-O-T2H-R

Model : Cross roller parallel hand

Ⓐ Size : 32CS

Ⓑ Option : Single acting, normally open type

Ⓒ Switch model No.: Proximity T2H switch, lead wire 1 m

Ⓓ Switch quantity : 1 on open side

How to order switch

1: For switch T*H*

● Switch body + mounting bracket set

HKP - T2H

Model — Switch model No. (Item Ⓒ above)

● Switch body

SW - T2H

Switch model No. (Item Ⓒ above)

● Mounting bracket set

HKP - T

Model

2: For switch T*V*

● Switch body + mounting bracket set

HKP - T2V - R

Model — Switch model No. (Item Ⓒ above) — * Switch mounting position

● Switch body

SW - T2V

Switch model No. (Item Ⓒ above)

● Mounting bracket set

HKP - TV - R

Model — * Switch mounting position

* For the switch mounting position, enter R for open switch and H for closed switch
HKP [- 50CS, 63CS, 80CS] can be mounted without a mounting bracket.

Rubber cover part model No.

Size	Part model No.
32CS	HKP-32K
40CS	HKP-40K
50CS	HKP-50K
63CS	HKP-63K

Specifications for rechargeable battery

(Catalog No. CC-1226A)

HKP - … G - … - P4*

● Design compatible with rechargeable battery manufacturing process.

* Contact CKD for details.

LCM
LCR
LCG
LCW
LCX
STM
STG
STS/STL
STR2
UCA2
ULK*
JSK/M2
JSG
JSC3/JSC4
USSD
UFCD
USC
UB
JSB3
LMB
LML
HCM
HCA
LBC
CAC4
UCAC2
CAC-N
UCAC-N
RCS2
RCC2
PCC
SHC
MCP
GLC
MFC
BBS
RRC
GRC
RV3*
NHS
HRL
LN
Hand
Chuk
MecHnd/Chuk
ShkAbs
FJ
FK
SpdContr
Ending
LSH-HP
LSH
FH100
BSA2
BHA/BHG
LHA
LHAG
HAP
HKP
HCP
HGP
HLF2
HLA/HLB
HLAG/HLBG
HLC
HLD
HMF
HMF-G
HMFB
HFP
FH500
HBL
HJL
HMD
HDL
HJD
BHE

Internal structure and parts list

● C (normally closed)

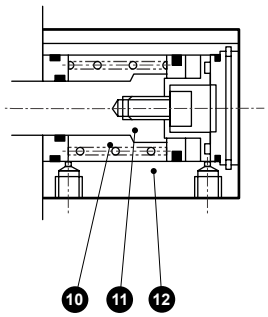

● O (normally open)

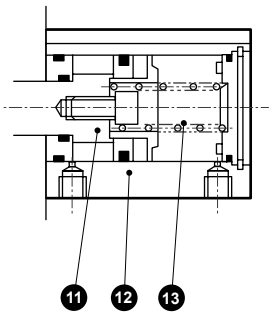

● Standard (double acting)

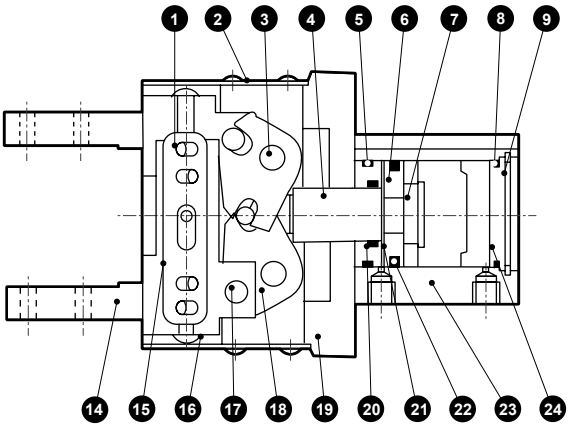

Cannot be disassembled

No.	Part name	Material	Remarks	No.	Part name	Material	Remarks
1	Cross roller	Alloy steel		13	Spring	Stainless steel	O type only
2	Side cover	Stainless steel		14	Finger	Steel	
3	Fulcrum axis	Steel		15	Retainer	Stainless steel	
4	Piston rod	Stainless steel		16	Bearing guide	Steel	
5	Cylinder gasket A	Nitrile rubber		17	Operation shaft	Steel	
6	Piston A	Aluminum alloy		18	Arm	Stainless steel	
7	Piston B	Acetal resin (32CS) Stainless steel (40 to 63CS) Aluminum alloy (80CS)		19	Body	Aluminum alloy	
				20	Rod packing	Nitrile rubber	
8	Cylinder gasket B	Nitrile rubber		21	Cushion	Resin	
9	Snap ring	Stainless steel		22	Piston packing	Nitrile rubber	
10	Spring	Stainless steel	C type only	23	Cylinder	Aluminum alloy	
11	Piston	Stainless steel		24	Cylinder guard	Aluminum alloy (32CS, 50 to 80CS) Acetal resin (40CS)	
12	Cylinder	Aluminum alloy					

Gripping power performance data

- Gripping power represents the thrust (per one finger) in the arrow direction shown in the figure.
- The gripping power in the opening/closing directions with finger length L of hand with a supply pressure of 0.3, 0.5 and 0.7 MPa is shown.

● Open direction (⇦)·····(shown with broken line)
● Closed direction (➡)——(shown with continuous line)

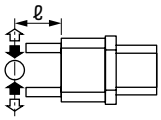

(Note) O type gripping power decreases approximately 20 to 30% in the closed direction compared to double acting.
C type gripping power decreases approximately 10 to 20% in the open direction compared to double acting.
When making a selection, read the precautions for design and selection on page 1764.

● HKP-32CS

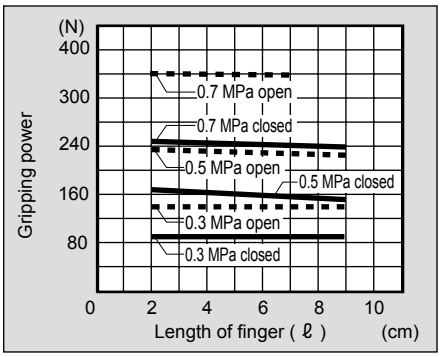

● HKP-40CS

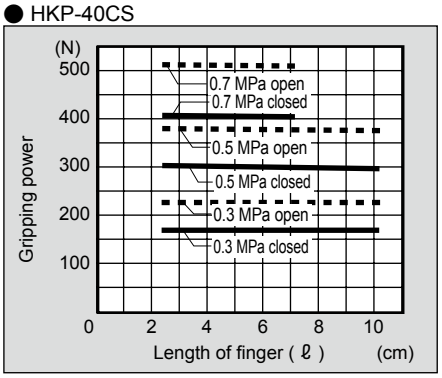

● HKP-50CS

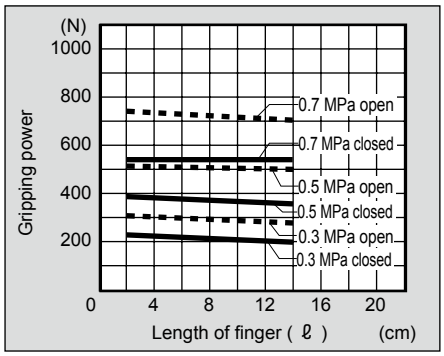

● HKP-63CS

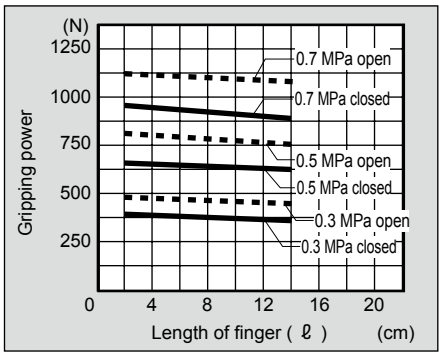

● HKP-80CS

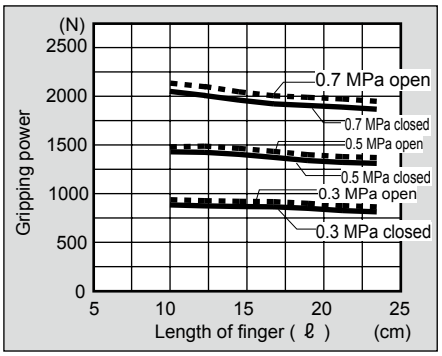

Dimensions

● HKP-32CS standard/O/C

· Dimensions in ( ) are for O [normally open] and C [normally closed] specifications.

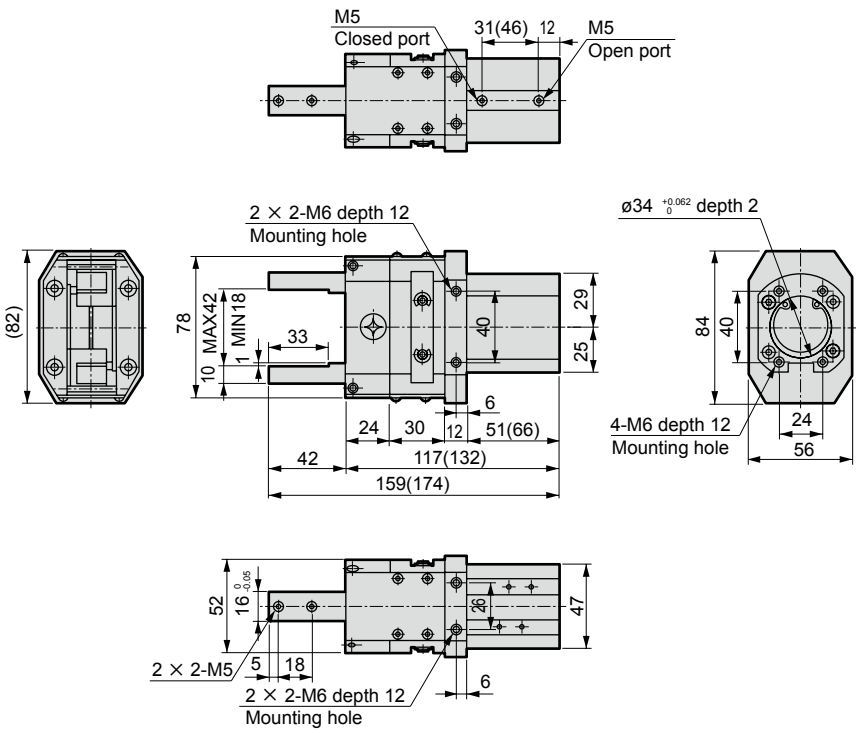

● With switch

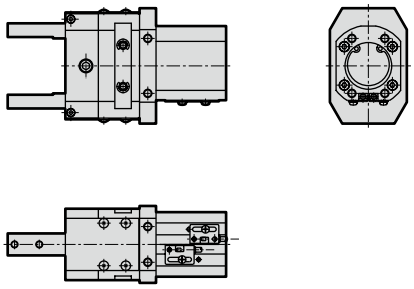

● With rubber cover

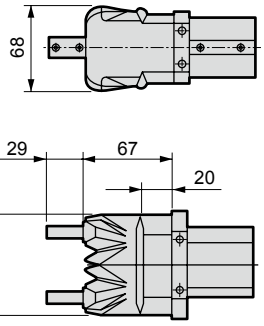

● HKP-40CS standard/O/C

· Dimensions in ( ) are for O [normally open] and C [normally closed] specifications.

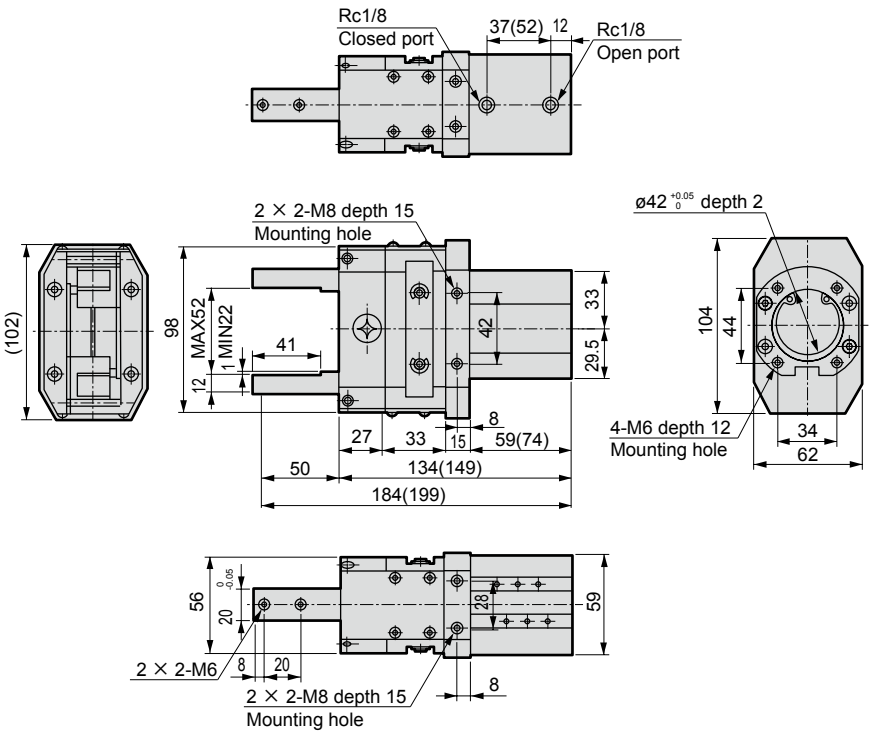

● With switch

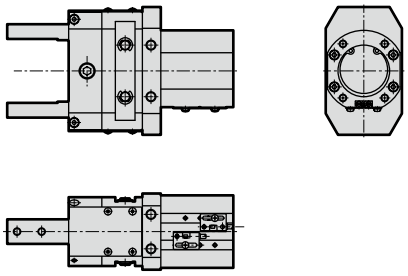

● With rubber cover

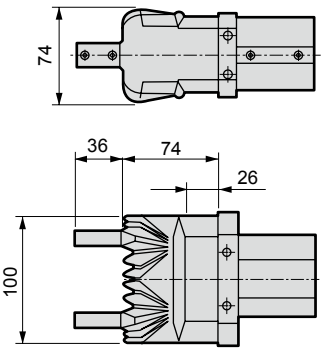

LCM
LCR
LCG
LCW
LCX
STM
STG
STS/STL
STR2
UCA2
ULK*
JSK/M2
JSG
JSC3/JSC4
USSD
UFCD
USC
UB
JSB3
LMB
LML
HCM
HCA
LBC
CAC4
UCAC2
CAC-N
UCAC-N
RCS2
RCC2
PCC
SHC
MCP
GLC
MFC
BBS
RRC
GRC
RV3*
NHS
HRL
LN
Hand
Chuk
MecHnd/Chuk
ShkAbs
FJ
FK
SpdContr
Ending
LSH-HP
LSH
FH100
BSA2
BHA/BHG
LHA
LHAG
HAP
HKP
HCP
HGP
HLF2
HLA/HLB
HLAG/HLBG
HLC
HLD
HMF
HMF-G
HMFB
HFP
FH500
HBL
HJL
HMD
HDL
HJD
BHE

Dimensions

● HKP-50CS standard/O/C

· Dimensions in ( ) are for O [normally open] and C [normally closed] specifications.

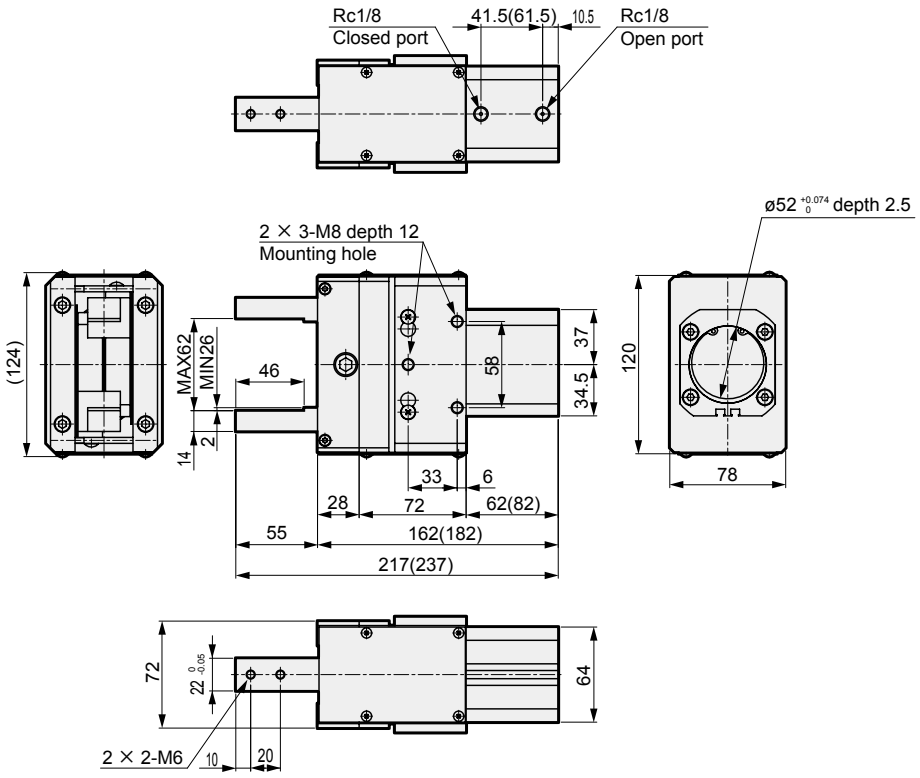

● With switch

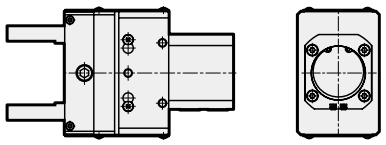

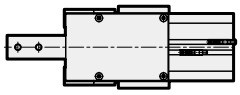

● With rubber cover

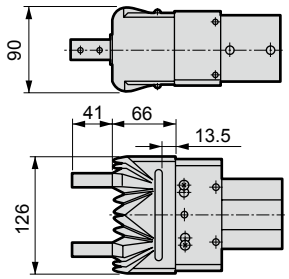

● HKP-63CS standard/O/C

· Dimensions in ( ) are for O [normally open] and C [normally closed] specifications.

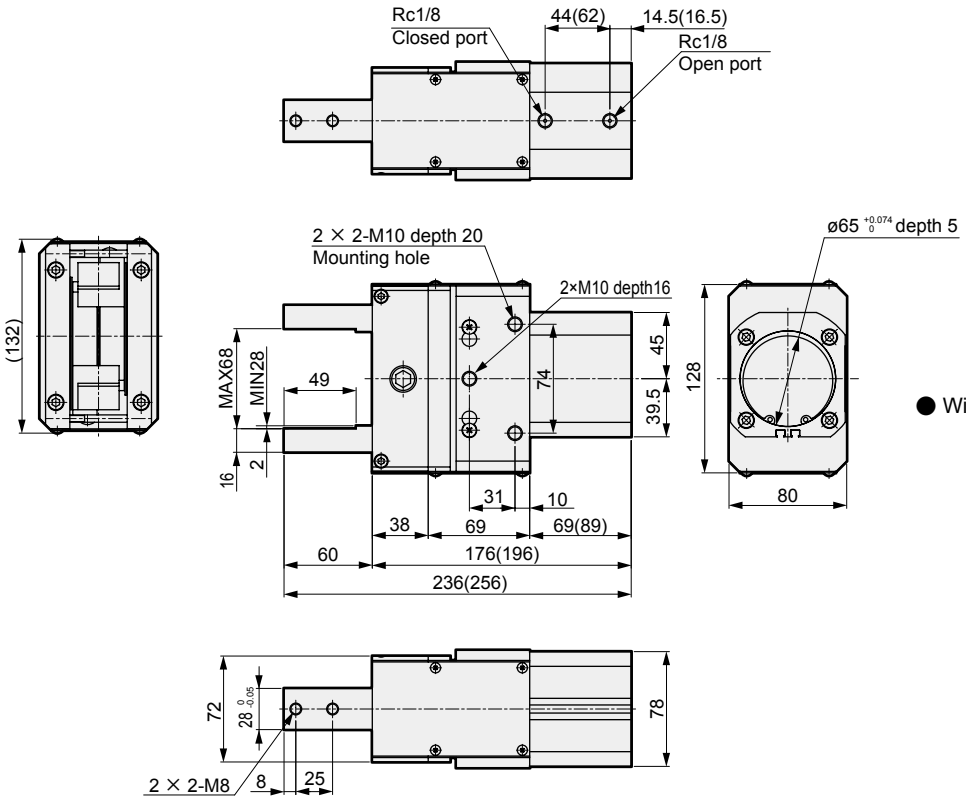

● With switch

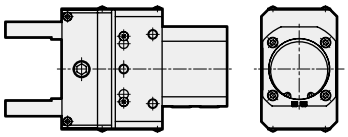

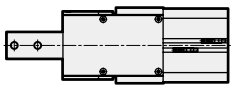

● With rubber cover

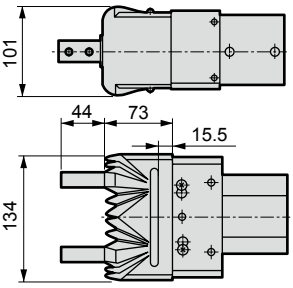

Dimensions

● HKP-80CS Standard

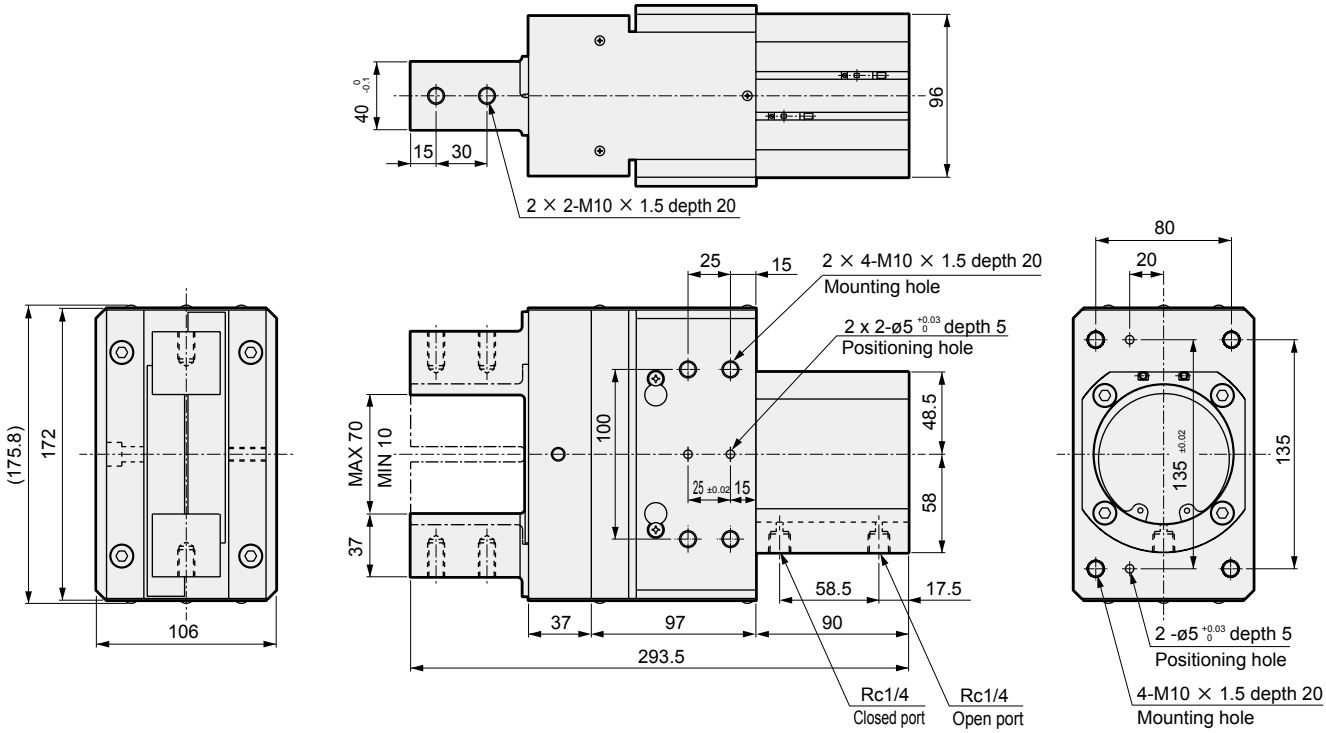

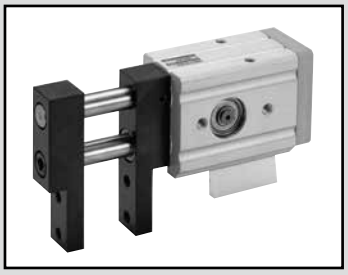

Lateral parallel hand Double acting

HCP Series

● Operating stroke length: 20, 30, 40 mm

Double acting

Specifications

1 MPa ≈ 145.0 psi, 1 MPa = 10 bar

Item		HCP		
Size		2CS	3CS	4CS
Bore size	mm	ø12	ø20	ø32
Actuation		Double acting		
Working fluid		Compressed air		
Max. working pressure	MPa	0.7 (≈101 psi, 7 bar)		
Min. working pressure	MPa	0.3 (≈44 psi, 3 bar)		
Ambient temperature	°C	5 (41°F) to 60 (140°F)		
Port size		M5		Rc1/8
Operating stroke length	mm	20	30	40
Rod diameter	mm	ø10	ø12	ø16
Volumetric capacity (reciprocating)	cm^3	2.3	9.4	32.1
Repeatability	mm	±0.05		
Weight	kg	0.52	0.98	1.90
Lubrication		Not required (use turbine oil class 1 ISO VG32 if necessary for lubrication)		

Switch specifications

Item	Proximity 2-wire	Proximity 3-wire
	T2H, T2V	T3H, T3V
Applications	Dedicated for programmable controller	For programmable controller, relay
Output method	-	NPN output
Power supply voltage	-	10 to 28 VDC
Load voltage/current	10 to 30 VDC, 5 to 20 mA (*1)	30 VDC or less, 100 mA or less
Display lamp	LED (Lit when ON)	
Leakage current	1 mA or less	10 μA or less
Weight	1 m: 18 g 3 m: 49 g 5 m: 80 g	

*1:The above max. load current is 20 mA at 25°C. The current is lower than 20 mA if the operating ambient temperature around the switch is higher than 25˚C. (5 to 10 mA at 60˚C)

*2: Refer to Ending Page 1 for detailed switch specifications and dimensions.

How to order

Without switch (built-in magnet for switch)

HCP - 2CS - Y1

With switch (built-in magnet for switch)

HCP - 2CS - Y1 - T2H - R

Ⓐ Size

Ⓑ Option
*1, *2

Ⓒ Switch model No.

Ⓓ Switch quantity

Code	Description
Ⓐ Size	
2CS	
3CS	
4CS	
Ⓑ Option	
Blank	Standard (double acting)
Y1	With attachment (S50C)
Y2	With attachment (MC nylon)

Ⓒ Switch model No.

Lead wire Straight	Lead wire Radial	Contact	Voltage AC	Voltage DC	Display	Lead wire
T2H*	T2V*	Proximity		●	1-color display	2-wire
T3H*	T3V*			●		3-wire

* Lead wire length	
Blank	1 m (standard)
3	3 m (option)
5	5 m (option)

Ⓓ Switch quantity	
R	1 on open side
H	1 on closed side
D	2

⚠ Precautions for model No. selection

*1: Refer to pages 1762 and 1763 for the dimensions and compatible models of the attachment. When ordered as an option, two are included at shipment.

[Example of model No.]

HCP-2CS-Y1-T2H-R

Model: Lateral parallel hand

Ⓐ Size : 2CS
Ⓑ Option : With attachment, material S50C
Ⓒ Switch model No. : Proximity T2H switch, lead wire 1 m
Ⓓ Switch quantity : One on open side

How to order switch

● For switch T*H*

• Switch body + mounting bracket set

HCP - T2H

Switch model No.
(Item Ⓒ above)

• Switch body

SW - T2H

Switch model No.
(Item Ⓒ above)

• Mounting bracket set

HCP - T

● For switch T*V*

• Switch body + mounting bracket set

HCP - T2V - *

Switch model No.
(Item Ⓒ above)

• Switch body

SW - T2V

Switch model No.
(Item Ⓒ above)

• Mounting bracket set

HCP - TV - *

(Select either R (open side) or H (closed side) for sections marked with an asterisk (*).)

Specifications for rechargeable battery

(Catalog No. CC-1226A)

HCP - ... - P4*

● Design compatible with rechargeable battery manufacturing process.

* Contact CKD for details.

LCM
LCR
LCG
LCW
LCX
STM
STG
STS/STL
STR2
UCA2
ULK*
JSK/M2
JSG
JSC3/JSC4
USSD
UFCD
USC
UB
JSB3
LMB
LML
HCM
HCA
LBC
CAC4
UCAC2
CAC-N
UCAC-N
RCS2
RCC2
PCC
SHC
MCP
GLC
MFC
BBS
RRC
GRC
RV3*
NHS
HRL
LN
Hand
Chuk
MecHnd/Chuk
ShkAbs
FJ
FK
SpdContr
Ending
LSH-HP
LSH
FH100
BSA2
BHA/BHG
LHA
LHAG
HAP
HKP
HCP
HGP
HLF2
HLA/HLB
HLAG/HLBG
HLC
HLD
HMF
HMF-G
HMFB
HFP
FH500
HBL
HJL
HMD
HDL
HJD
BHE

Internal structure and parts list

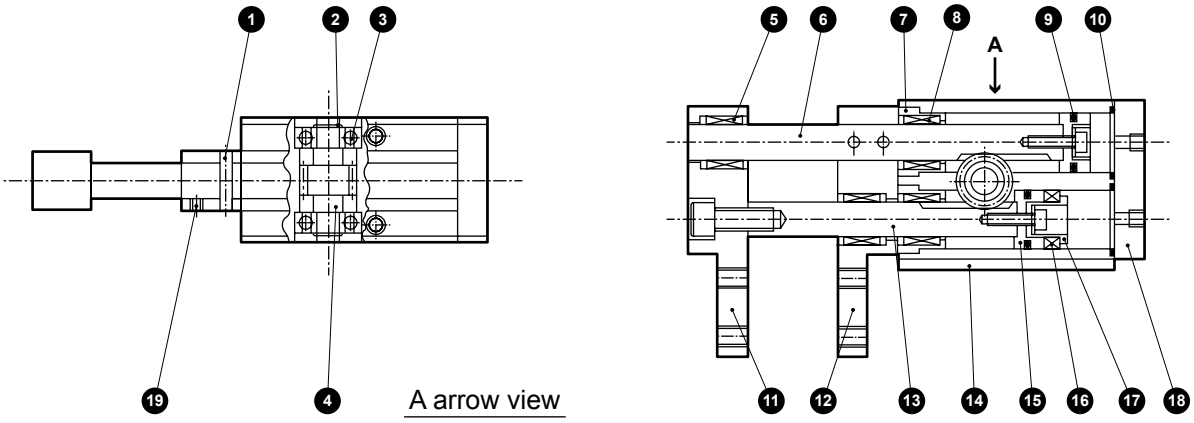

Cannot be disassembled

No.	Part name	Material	Remarks	No.	Part name	Material	Remarks
1	Spring pin	Steel		10	Cylinder gasket	Nitrile rubber	
2	Grip snap ring	Steel		11	Finger B	Steel	
3	Bearing	Steel		12	Finger A	Steel	
4	Pinion gear	Stainless steel		13	Piston rod B	Stainless steel	
5	Needle bearing	Steel		14	Body	Aluminum alloy	
6	Piston rod A	Stainless steel		15	Piston A	Aluminum alloy	
7	Rod cover	Aluminum alloy		16	Magnet		
8	Needle bearing	Steel		17	Piston B	Acetal resin	
9	Piston packing	Nitrile rubber		18	Head cover	Aluminum alloy	
				19	Hexagon socket set screw	Steel alloy	

Gripping power performance data

- Gripping power represents the thrust (per one finger) in the arrow direction shown in the figure.
- The gripping power in the opening/closing directions with finger length ℓ of the hand with a supply pressure of 0.3, 0.5 and 0.7 MPa is shown.

● Open direction (⇦)- - - - - - (shown with broken line)
● Closed direction (➡)——— (shown with continuous line)

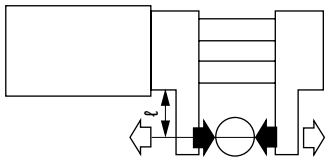

(Note) For selection, see page 1764 for design and selection precautions.

● HCP-2CS

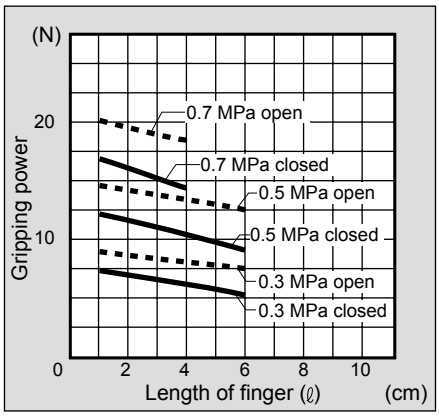

● HCP-3CS

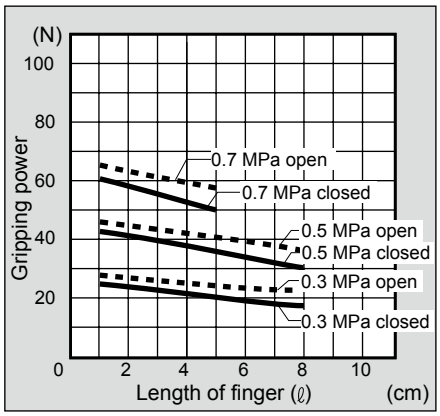

● HCP-4CS

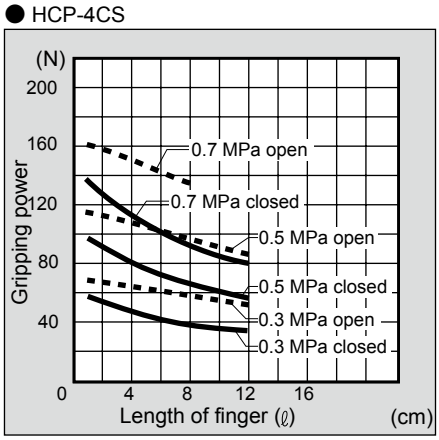

Dimensions

● HCP-2CS Standard

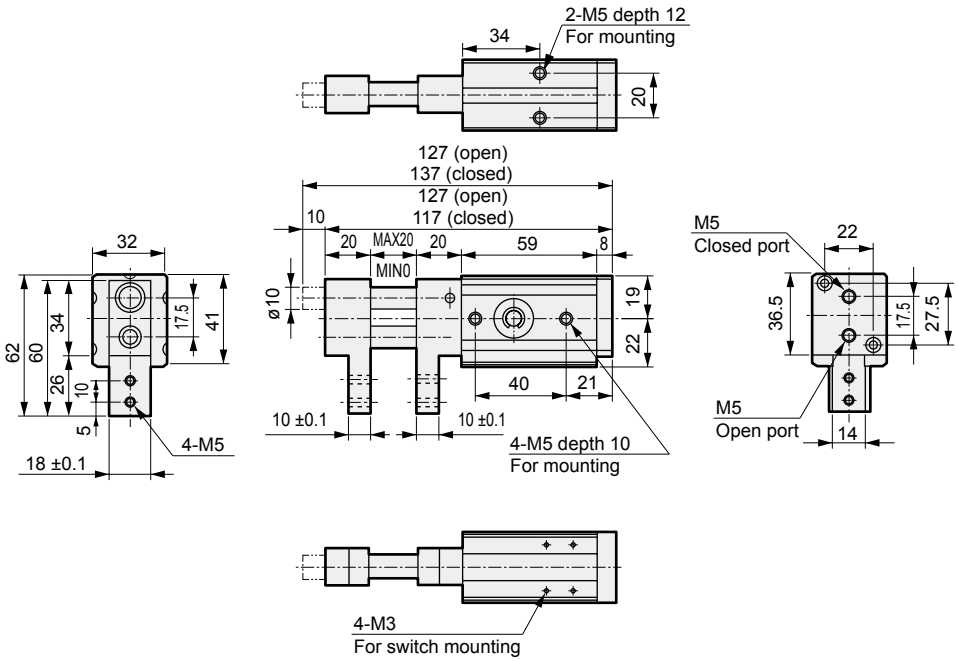

● With switch

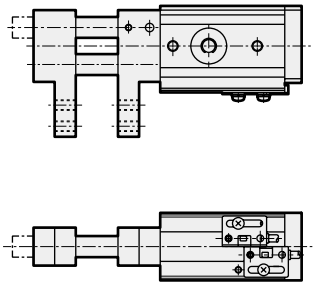

● HCP-3CS Standard

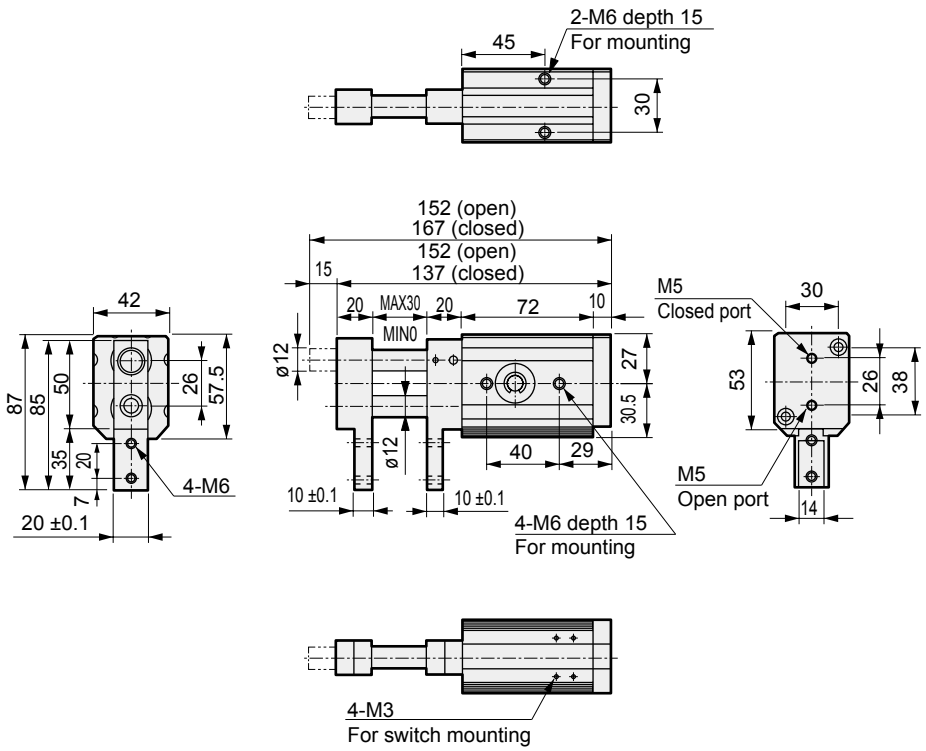

● With switch

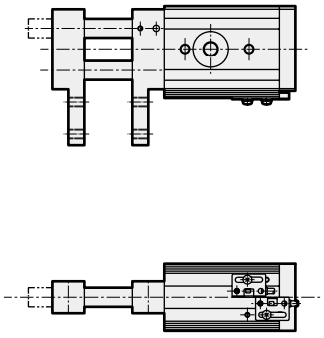

LCM
LCR
LCG
LCW
LCX
STM
STG
STS/STL
STR2
UCA2
ULK*
JSK/M2
JSG
JSC3/JSC4
USSD
UFCD
USC
UB
JSB3
LMB
LML
HCM
HCA
LBC
CAC4
UCAC2
CAC-N
UCAC-N
RCS2
RCC2
PCC
SHC
MCP
GLC
MFC
BBS
RRC
GRC
RV3*
NHS
HRL
LN
Hand
Chuk
MecHnd/Chuk
ShkAbs
FJ
FK
SpdContr
Ending
LSH-HP
LSH
FH100
BSA2
BHA/BHG
LHA
LHAG
HAP
HKP
HCP
HGP
HLF2
HLA/HLB
HLAG/HLBG
HLC
HLD
HMF
HMF-G
HMFB
HFP
FH500
HBL
HJL
HMD
HDL
HJD
BHE

Dimensions

● HCP-4CS Standard

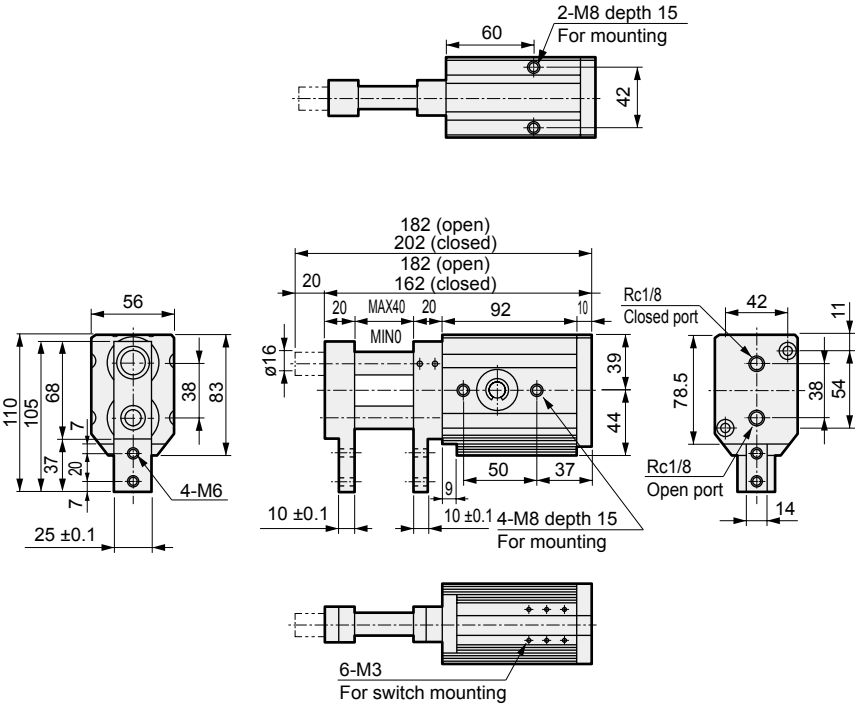

● With switch

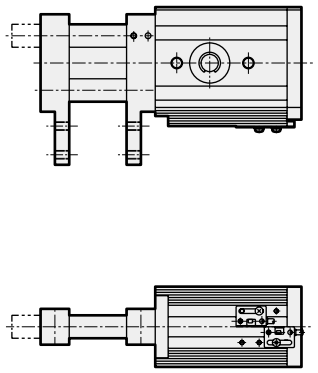

MEMO

Long stroke parallel hand Double acting/single acting

HGP Series

● Operational stroke length: 56 mm

Double acting | Single acting (normally open) | Single acting (normally closed)

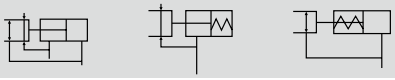

RoHS CAD

Specifications

1 MPa ≈ 145.0 psi, 1 MPa = 10 bar

Item		HGP
Size		3CS
Bore size	mm	ø25
Actuation		Double acting/single acting
Working fluid		Compressed air
Max. working pressure	MPa	0.7 (≈101 psi, 7 bar)
Min. working pressure	MPa	0.3 (≈44 psi, 3 bar)
Ambient temperature	°C	5 (41°F) to 60 (140°F)
Port size		M5
Operating stroke length	mm	56
Rod diameter	mm	ø10
Volumetric capacity (reciprocating)	cm^3	11.8
Repeatability	mm	±0.03
Weight	kg	0.85
Lubrication		Not required (use turbine oil class 1 ISO VG32 if necessary for lubrication)

Switch specifications

Item	Proximity 2-wire	Proximity 3-wire
	T2H/V	T3H/V
Applications	Dedicated for programmable controller	For programmable controller, relay
Output method	–	NPN output
Power supply voltage	–	10 to 28 VDC
Load voltage/current	10 to 30 VDC, 5 to 20 mA (*1)	30 VDC or less, 100 mA or less
Display lamp	LED (Lit when ON)	
Leakage current	1 mA or less	10 μA or less
Weight	1 m: 18g 3 m: 49g 5 m: 80 g *3	

*1: The above max. load current is 20 mA at 25°C.
The current is lower than 20 mA if the operating ambient temperature around the switch is higher than 25˚C. (5 to 10 mA at 60˚C)

*2: Refer to Ending Page 1 for detailed switch specifications and dimensions.

*3: The weight of switch mounting bracket is 1.5 g.

How to order

Without switch (built-in magnet for switch)

HGP - 3CS - O

With switch (built-in magnet for switch)

HGP - 3CS - O - T2H - R

Ⓐ Size

Ⓑ Option

Ⓒ Switch model No.

Ⓓ Switch quantity

Code	Description
Ⓐ Size	
3CS	
Ⓑ Option	
Blank	Standard (double acting)
O	Single acting (normally open)
C	Single acting (normally closed)

Ⓒ Switch model No.

Lead wire Straight	Lead wire Radial	Contact	Voltage AC	Voltage DC	Display	Lead wire
T2H*	T2V*	Proximity		●	1-color display	2-wire
T3H*	T3V*			●		3-wire

* Lead wire length	
Blank	1 m (standard)
3	3 m (option)
5	5 m (option)

Ⓓ Switch quantity	
R	1 on open side
H	1 on closed side
D	2

[Example of model No.]

HGP-3CS-O-T2H-R

Model: Long stroke parallel hand

Ⓐ Size : 3CS
Ⓑ Option : Single acting, normally open
Ⓒ Switch model No. : Proximity S3 switch, lead wire 1 m
Ⓓ Switch quantity : One on open side

How to order switch

● For switch T*H*

• Switch body + mounting bracket set

HGP - T2H

Switch model No.
(Item Ⓒ above)

• Switch body

SW - T2H

Switch model No.
(Item Ⓒ above)

• Mounting bracket set

HGP - T

● For switch T*V*

• Switch body + mounting bracket set

HGP - T2V - *

Switch model No.
(Item Ⓒ above)

• Switch body

SW - T2V

Switch model No.
(Item Ⓒ above)

• Mounting bracket set

HGP - TV - *

(Select either R (open side) or H (closed side) for sections marked with an asterisk (*).)

LCM
LCR
LCG
LCW
LCX
STM
STG
STS/STL
STR2
UCA2
ULK*
JSK/M2
JSG
JSC3/JSC4
USSD
UFCD
USC
UB
JSB3
LMB
LML
HCM
HCA
LBC
CAC4
UCAC2
CAC-N
UCAC-N
RCS2
RCC2
PCC
SHC
MCP
GLC
MFC
BBS
RRC
GRC
RV3*
NHS
HRL
LN
Hand
Chuk
MecHnd/Chuk
ShkAbs
FJ
FK
SpdContr
Ending
LSH-HP
LSH
FH100
BSA2
BHA/BHG
LHA
LHAG
HAP
HKP
HCP
HGP
HLF2
HLA/HLB
HLAG/HLBG
HLC
HLD
HMF
HMF-G
HMFB
HFP
FH500
HBL
HJL
HMD
HDL
HJD
BHE

Internal structure and parts list

● Standard (double acting)/O (normally open)

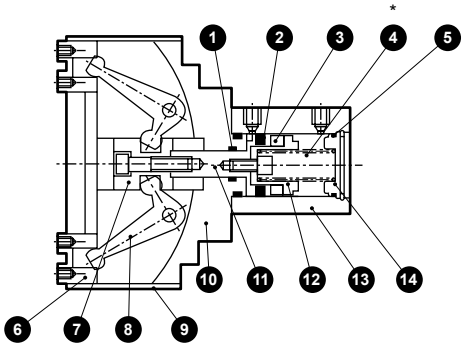

● C (normally closed)

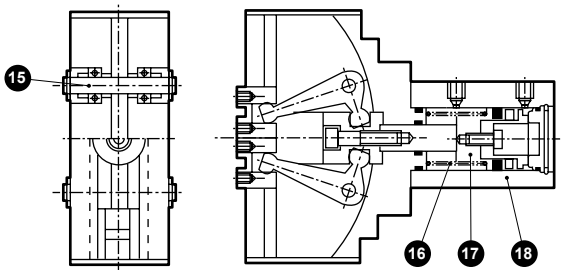

Cannot be disassembled

*Standard (double acting) type does not contain ❹ spring.

No.	Part name	Material	Remarks	No.	Part name	Material	Remarks
1	Rod packing	Nitrile rubber		11	Piston A	Stainless steel	
2	Piston packing	Nitrile rubber		12	Piston B	Acetal resin	
3	Magnet			13	Cylinder	Aluminum alloy	
4	Spring	Steel	O type only	14	Cylinder guard	Acetal resin	
5	Cylinder gasket	Nitrile rubber		15	Fulcrum axis	Steel	
6	Finger	Steel		16	Spring	Stainless steel	
7	Operation ring	Steel		17	Piston	Stainless steel	
8	Arm	Steel		18	Cylinder	Aluminum alloy	
9	Side cover	Stainless steel					
10	Body	Aluminum alloy					

Gripping power performance data

- Gripping power represents the thrust (per one finger) in the arrow direction shown in the figure.
- The gripping power in the opening/closing directions with finger length ℓ of the hand with a supply pressure of 0.3, 0.5 and 0.7 MPa is shown.
  - ● Open direction (⇦) - - - - - - (shown with broken line)
  - ● Closed direction (➡) ——— (shown with continuous line)

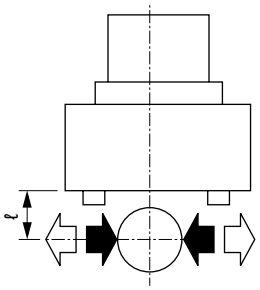

(Note) For selection, see page 1764 for design and selection precautions.

● HGP-3CS

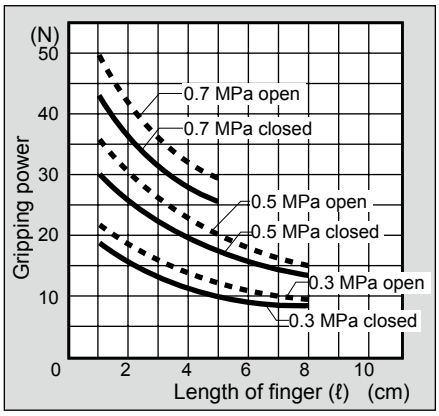

(Note) O type gripping power decreases approximately 20 to 30% in the closed direction compared to double acting.
C type gripping power decreases approximately 10 to 20% in the open direction compared to double acting.

Dimensions

● HGP-3CS Standard/O/C

● Dimensions in ( ) are for C [normally closed] specifications.

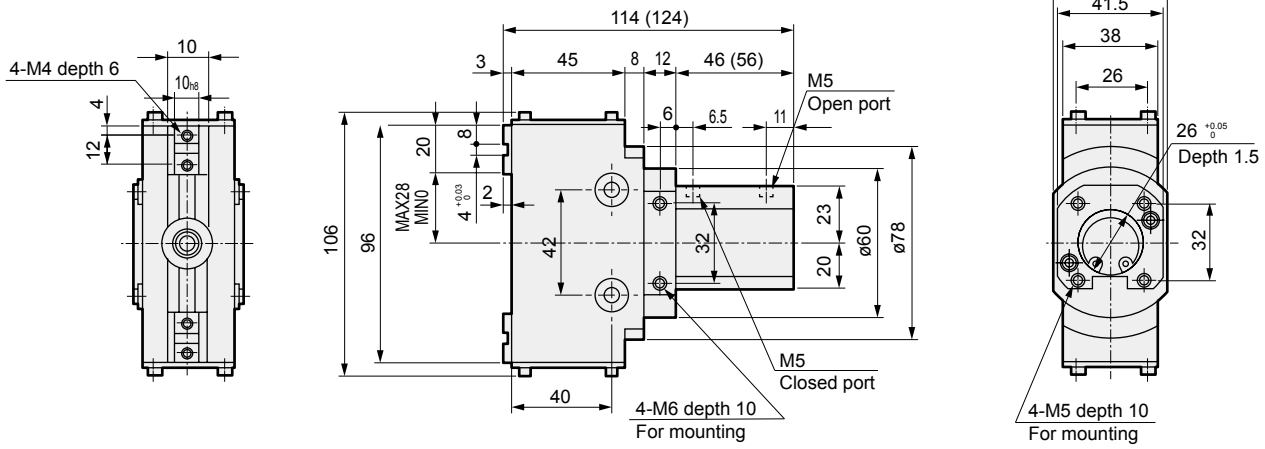

● With switch

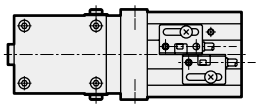

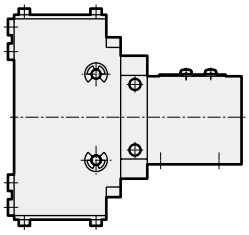

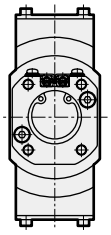

LCM
LCR
LCG
LCW
LCX
STM
STG
STS/STL
STR2
UCA2
ULK*
JSK/M2
JSG
JSC3/JSC4
USSD
UFCD
USC
UB
JSB3
LMB
LML
HCM
HCA
LBC
CAC4
UCAC2
CAC-N
UCAC-N
RCS2
RCC2
PCC
SHC
MCP
GLC
MFC
BBS
RRC
GRC
RV3*
NHS
HRL
LN
Hand
Chuk
MecHnd/Chuk
ShkAbs
FJ
FK
SpdContr
Ending
LSH-HP
LSH
FH100
BSA2
BHA/BHG
LHA
LHAG
HAP
HKP
HCP
HGP
HLF2
HLA/HLB
HLAG/HLBG
HLC
HLD
HMF
HMF-G
HMFB
HFP
FH500
HBL
HJL
HMD
HDL
HJD
BHE

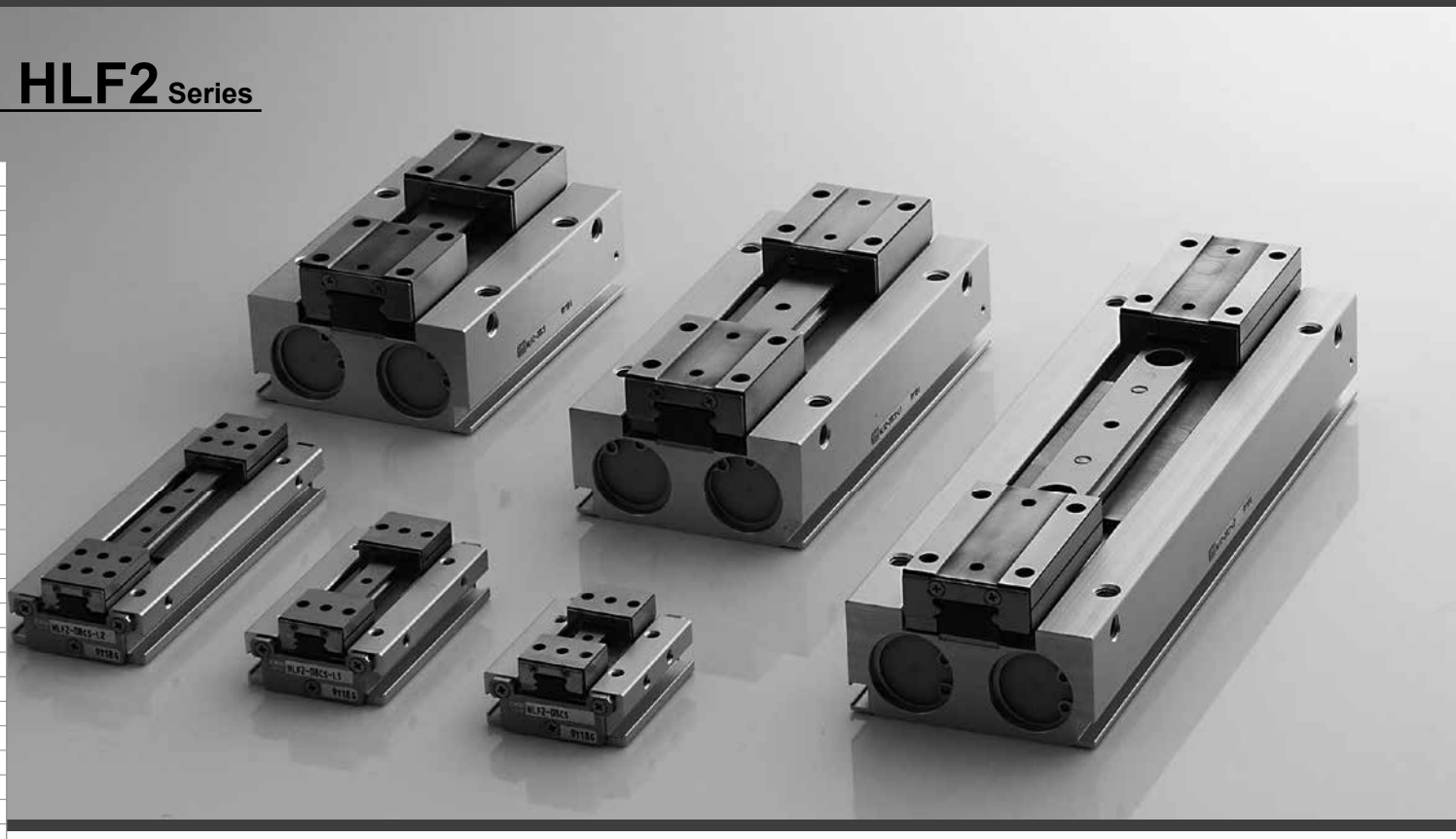

Thin and lightweight with high gripping power

Achieves high gripping power with a double piston system while more compact.

- Height: **Max. -32%**
- Weight: **Max. -32%**

(Compared with CKD HLC Series)

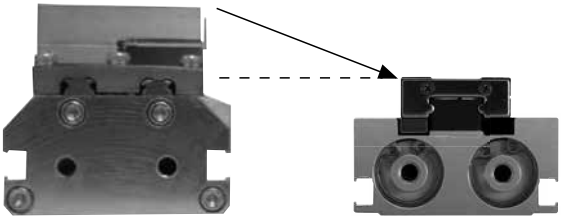

HLC Series HLF2 Series

3 types of strokes to choose from

Bore size (mm)	Standard stroke length (mm)	Long stroke 1 (mm)	Long stroke 2 (mm)
ø8 x 2	12	24	48
ø12 x 2	16	32	64
ø16 x 2	20	40	80
ø20 x 2	24	48	96

Bending resistant lead wire switch is available

A bending resistant lead wire switch that prevents disconnections even when used in moving parts can be selected.
(Switch model No: T2HR3, T2VR3)

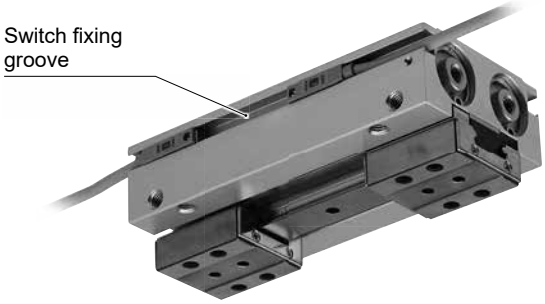

Low-profile long stroke hand HLF2 Series

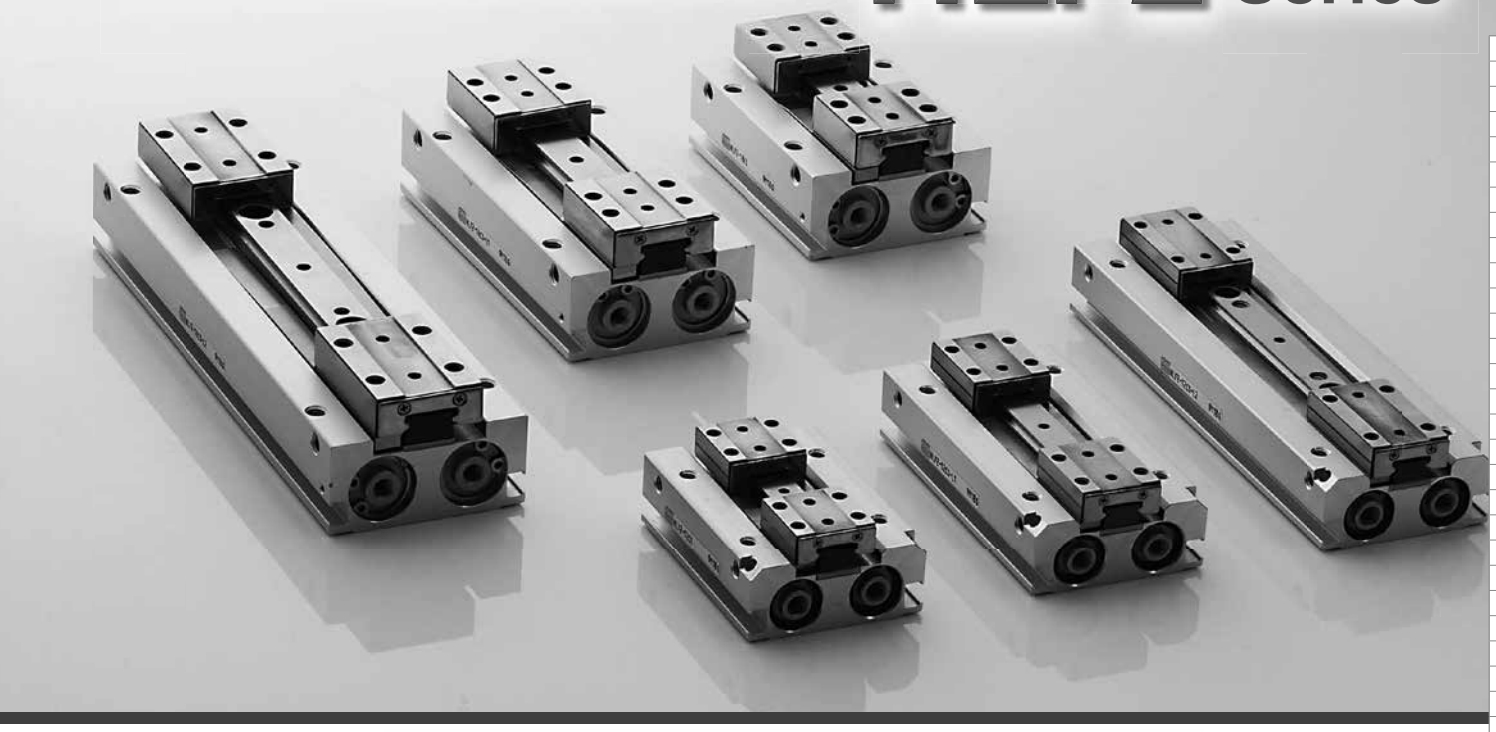

Ideal for robot hands

Reduced moment of inertia

In order to remain thin and lightweight, the moment of inertia was reduced, lessening the load on the robot.

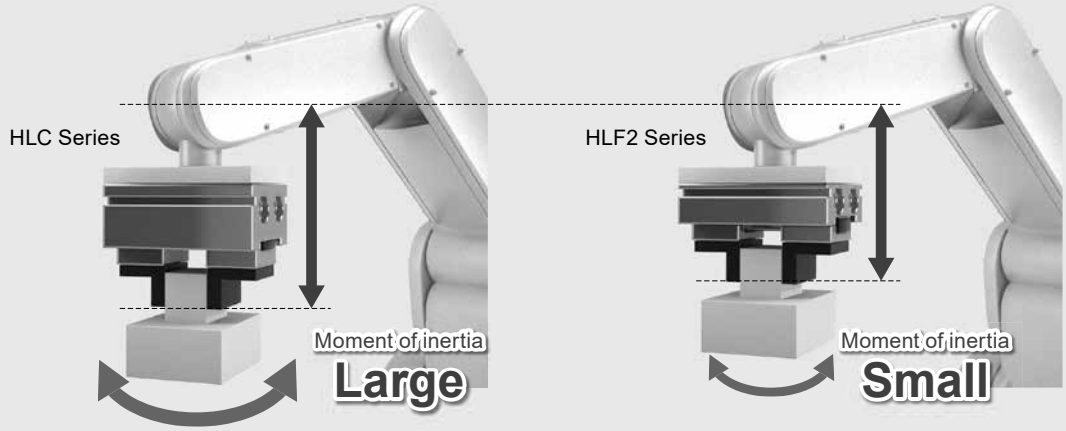

Space saving

The ideal size to suit the size of the workpiece can be selected.

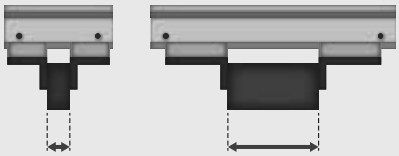

No tool changer required

With a long stroke, one hand is able to handle multiple workpiece models.

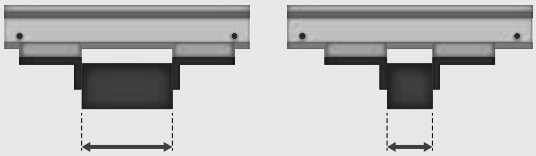

Low-profile long stroke hand

HLF2 Series

● Operating stroke length: Standard 12, 16, 20, 24 mm
Long stroke 24, 32, 40, 48, 64, 80, 96 mm

Double acting

RoHS CAD

Specifications

1 MPa ≈ 145.0 psi, 1 MPa = 10 bar

Item	HLF2-08CS			HLF2-12CS			HLF2-16CS			HLF2-20CS		
	Standard	L1	L2	Standard	L1	L2	Standard	L1	L2	Standard	L1	L2
Bore size mm	ø8 x 2			ø12 x 2			ø16 x 2			ø20 x 2		
Working fluid	Compressed air											
Max. working pressure MPa	0.7 (≈101 psi, 7 bar)											
Min. working pressure MPa	0.2 (≈29 psi, 2 bar)											
Ambient temperature °C	5 (41°F) to 60 (140°F)											
Port size	M3			M5								
Operating stroke length mm	12	24	48	16	32	64	20	40	80	24	48	96
Volumetric capacity (reciprocating) cm^3	1.2	2.4	4.8	3.6	7.2	14.4	8.0	16.0	32.0	15.1	30.1	60.2
Repeatability mm	±0.03											
Weight kg	0.09	0.12	0.17	0.17	0.24	0.37	0.34	0.48	0.75	0.62	0.84	1.33
Lubrication	Not required (use turbine oil class 1 ISO VG32 if necessary for lubrication)											

Switch specifications

Item	Proximity 2-wire	Proximity 3-wire
	T2H/V, T2HR3, T2VR3	T3H/V
Applications	Dedicated for programmable controller	For programmable controller, relay
Output method	—	NPN output
Power supply voltage	—	10 to 28 VDC
Load voltage/current	10 to 30 VDC, 5 to 20 mA (*1)	30 VDC or less, 100 mA or less
Display lamp	LED (Lit when ON)	
Leakage current	1 mA or less	10 μA or less
Weight	1 m: 18 g 3 m: 49 g 5 m: 80 g	

*1 : The above max. load current is 20 mA at 25°C. The current is lower than 20 mA if the operating ambient temperature around the switch is higher than 25˚C. (5 to 10 mA at 60˚C)

*2 : Refer to “Pneumatic Cylinders II” (CB-030SA) for other switch specifications.

How to order

Without switch (built-in magnet for switch)

HLF2 - 12CS - L1

With switch (built-in magnet for switch)

HLF2 - 12CS - L1 - T2H - R

Ⓐ Size

Ⓑ Option

Ⓒ Switch model No.

Ⓓ Switch quantity

Code	Description
Ⓐ Size	
08CS	
12CS	
16CS	
20CS	

Ⓑ Option	
Blank	Standard
L1	Long stroke 1
L2	Long stroke 2

Ⓒ Switch model No.

Lead wire Straight	Lead wire Radial	Contact	Voltage AC	Voltage DC	Display	Lead wire
T2H*	**T2V***	Proximity		●	1-color display	2-wire
T3H*	**T3V***			●		3-wire
T2HR3	**T2VR3**			●	1-color display Bending resistant lead wire	2-wire

*** Lead wire length**	
Blank	1 m (standard)
3	3 m (option)
5	5 m (option)

Ⓓ Switch quantity	
R	1 on open side
H	1 on closed side
D	2

[Example of model No.]

HLF2-12CS-L1-T2H-R

Ⓐ Size : 12CS
Ⓑ Option : Long stroke 1
Ⓒ Switch model No. : Proximity T2H switch, lead wire 1 m
Ⓓ Switch quantity : 1 on open side

How to order switch

SW - T2H

Switch model No.
(Item Ⓒ above)

Internal structure and parts list

- HLF2-08CS (standard)
- HLF2-08CS-L1, L2 (Long stroke)

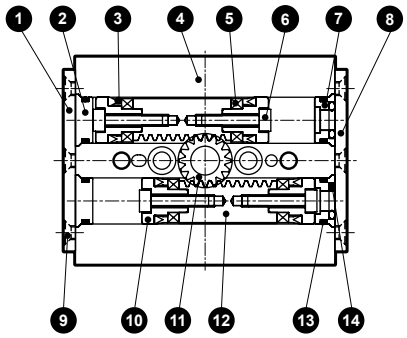

- HLF2-12CS to 20CS (Standard)
- HLF2-12CS to 20CS-L1, L2 (Long stroke)

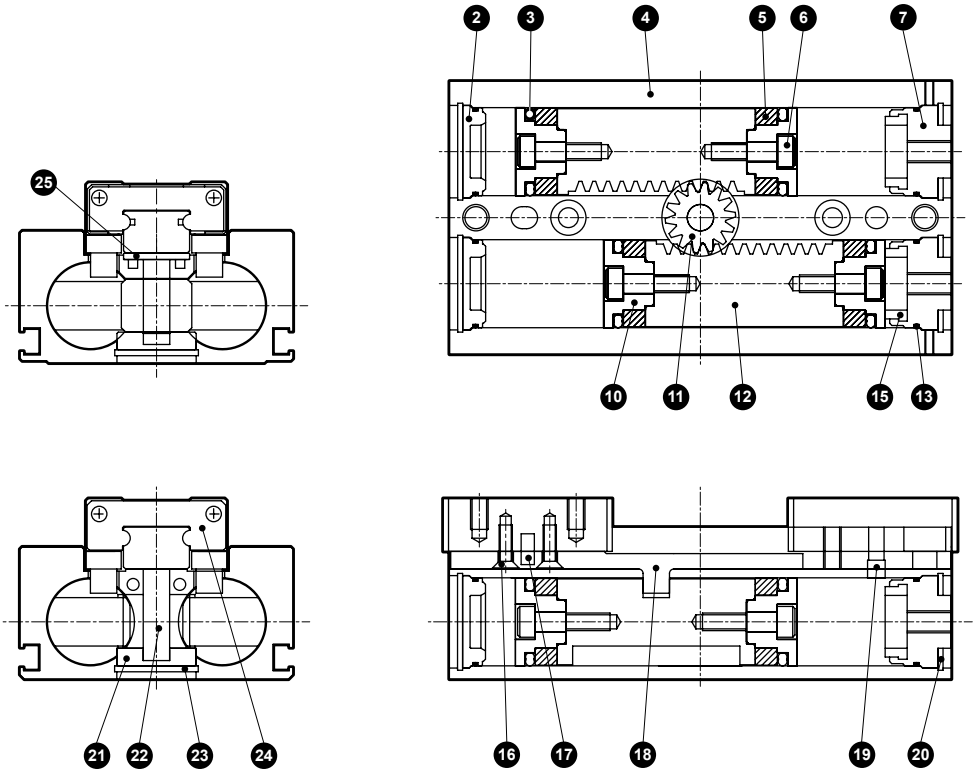

Cannot be disassembled

No.	Part name	Material	Remarks	No.	Part name	Material	Remarks
1	Side plate 2	Stainless steel		14	Cover gasket	Nitrile rubber	
2	Cylinder guard	Resin		15	Cushion	Resin	
3	Piston packing	Nitrile rubber		16	Cross-recessed flat head machine screw		
4	Body	Aluminum alloy		17	Positioning pin	Bearing steel	
5	Magnet			18	Rack joint	Stainless steel	
6	Hexagon socket head cap screw			19	Positioning pin	Bearing steel	
7	Cylinder cover port	Aluminum alloy		20	C snap ring for hole	Stainless steel	
8	Side plate 1	Stainless steel		21	Center plate	Aluminum alloy	
9	Cross-recessed flat head machine screw			22	Pinion shaft	Bearing steel	
10	Piston	Resin		23	C snap ring for hole	Stainless steel	
11	Pinion	Stainless steel		24	Linear guide		
12	Rack	Stainless steel		25	Seal plate	Aluminum alloy	
13	Cylinder gasket	Nitrile rubber					

Gripping power performance data

- Gripping power represents the thrust (per one finger) in the arrow direction shown in the figure.
- The gripping power with finger length L of the hand and supply pressure of 0.3, 0.5 and 0.7 MPa is shown.
  - ● Common to open direction (⇦) and closed direction (➡)
    ——— (shown with continuous line)

(Note) For selection, see page 1764 for design and selection precautions.

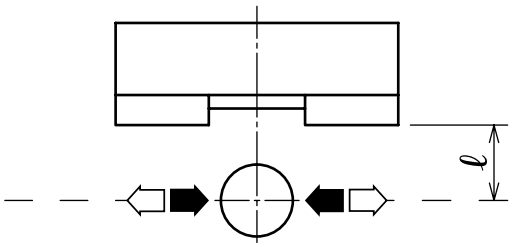

● HLF2-08CS

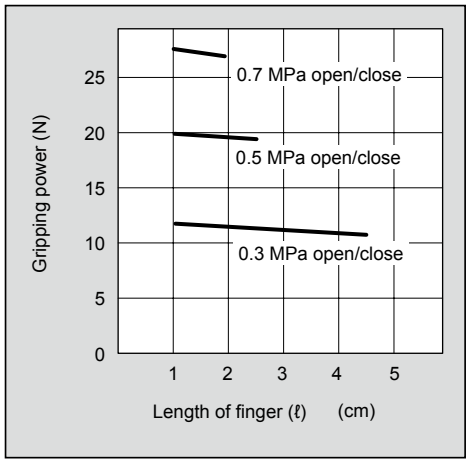

● HLF2-12CS

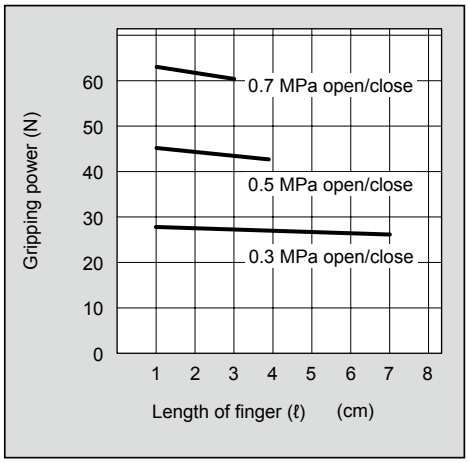

● HLF2-16CS

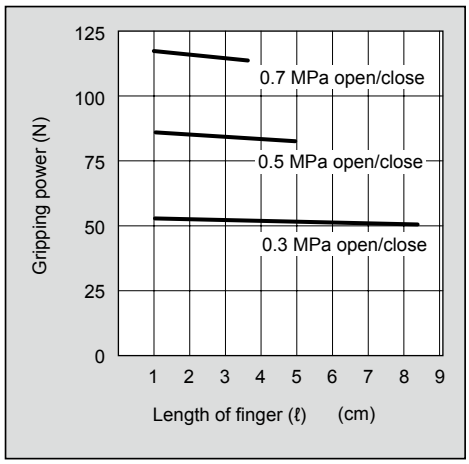

● HLF2-20CS

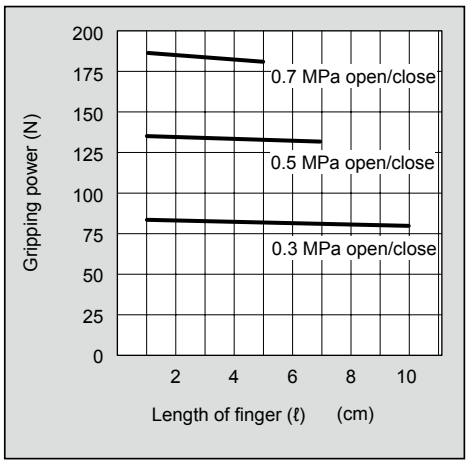

LCM
LCR
LCG
LCW
LCX
STM
STG
STS/STL
STR2
UCA2
ULK*
JSK/M2
JSG
JSC3/JSC4
USSD
UFCD
USC
UB
JSB3
LMB
LML
HCM
HCA
LBC
CAC4
UCAC2
CAC-N
UCAC-N
RCS2
RCC2
PCC
SHC
MCP
GLC
MFC
BBS
RRC
GRC
RV3*
NHS
HRL
LN
Hand
Chuk
MecHnd/Chuk
ShkAbs
FJ
FK
SpdContr
Ending
LSH-HP
LSH
FH100
BSA2
BHA/BHG
LHA
LHAG
HAP
HKP
HCP
HGP
HLF2
HLA/HLB
HLAG/HLBG
HLC
HLD
HMF
HMF-G
HMFB
HFP
FH500
HBL
HJL
HMD
HDL
HJD
BHE

Dimensions CAD

● HLF2-08CS Standard/L1

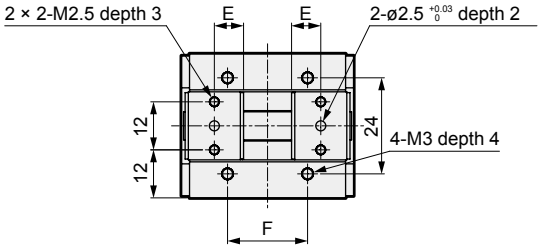

● With switch

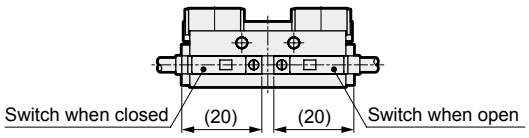

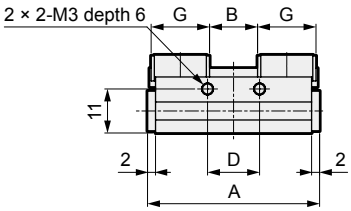

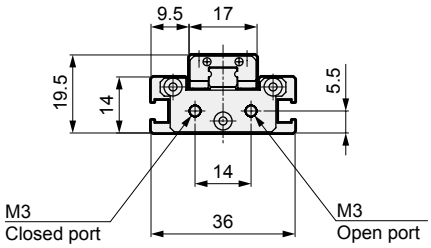

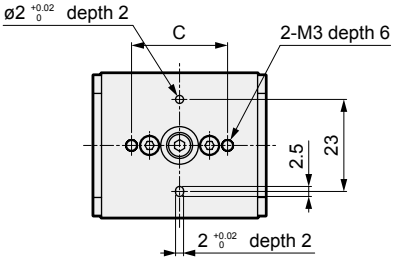

Code	A	B		C	D	E	F	G
		MAX	MIN					
Standard	43	12	0	24	13	7.3	20	14.6
L1	61	24	0	41	31	8.8	38	17.6

● HLF2-08CS-L2

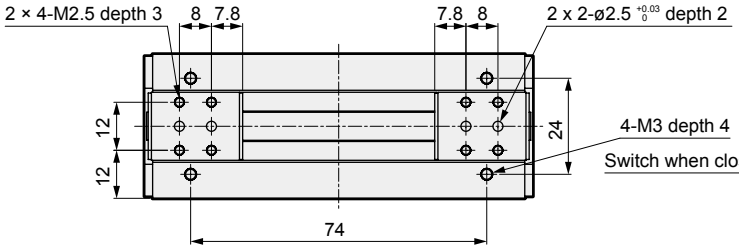

● With switch

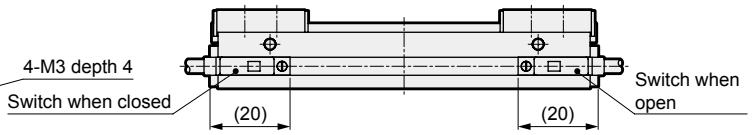

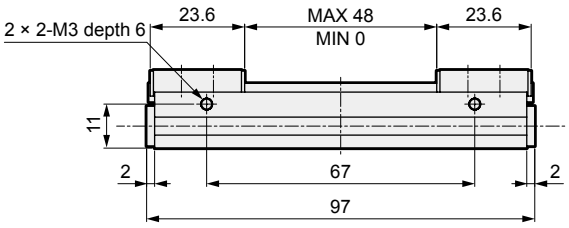

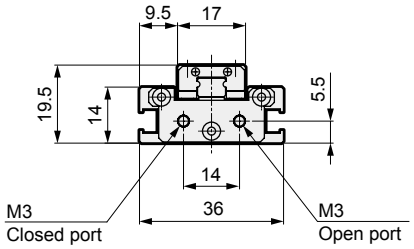

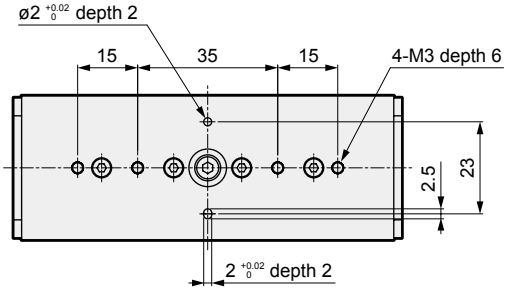

Dimensions

● HLF2-12CS Standard/L1

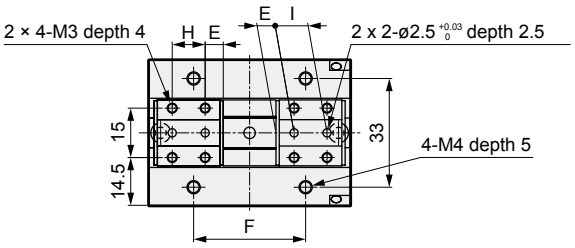

● With switch

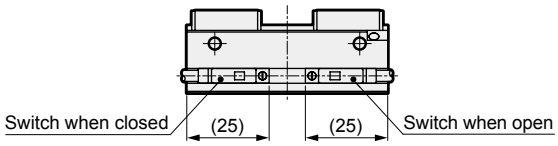

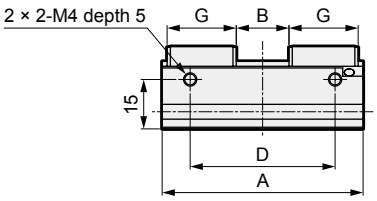

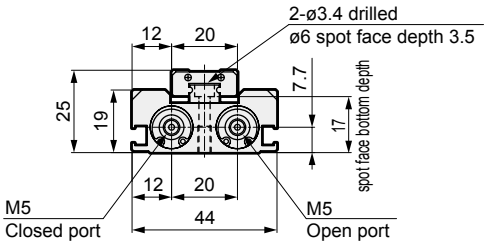

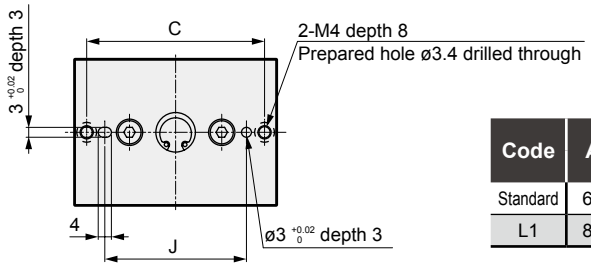

Code	A	B		C	D	E	F	G	H	I	J
		MAX	MIN								
Standard	61	16	0	54	44	5.5	34	21	10	10 ±0.05	43
L1	83	32	0	76	66	6.5	56	25	12	12 ±0.05	56

● HLF2-12CS-L2

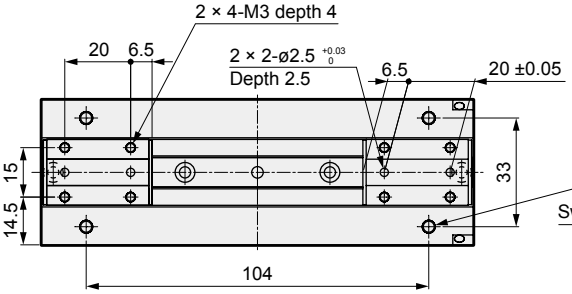

● With switch

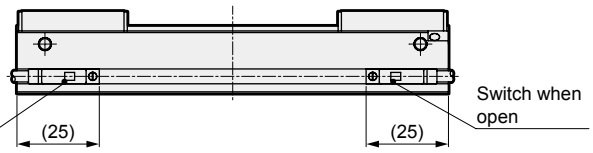

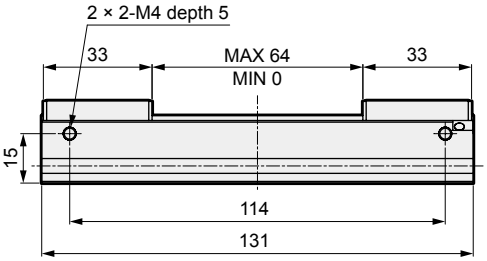

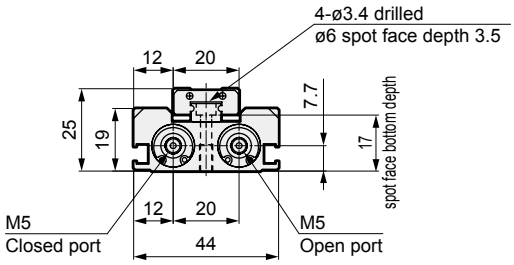

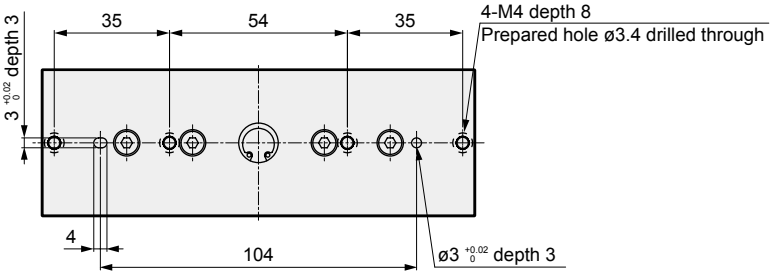

LCM
LCR
LCG
LCW
LCX
STM
STG
STS/STL
STR2
UCA2
ULK*
JSK/M2
JSG
JSC3/JSC4
USSD
UFCD
USC
UB
JSB3
LMB
LML
HCM
HCA
LBC
CAC4
UCAC2
CAC-N
UCAC-N
RCS2
RCC2
PCC
SHC
MCP
GLC
MFC
BBS
RRC
GRC
RV3*
NHS
HRL
LN
Hand
Chuk
MecHnd/Chuk
ShkAbs
FJ
FK
SpdContr
Ending
LSH-HP
LSH
FH100
BSA2
BHA/BHG
LHA
LHAG
HAP
HKP
HCP
HGP
HLF2
HLA/HLB
HLAG/HLBG
HLC
HLD
HMF
HMF-G
HMFB
HFP
FH500
HBL
HJL
HMD
HDL
HJD
BHE

Dimensions

● HLF2-16CS Standard/L1

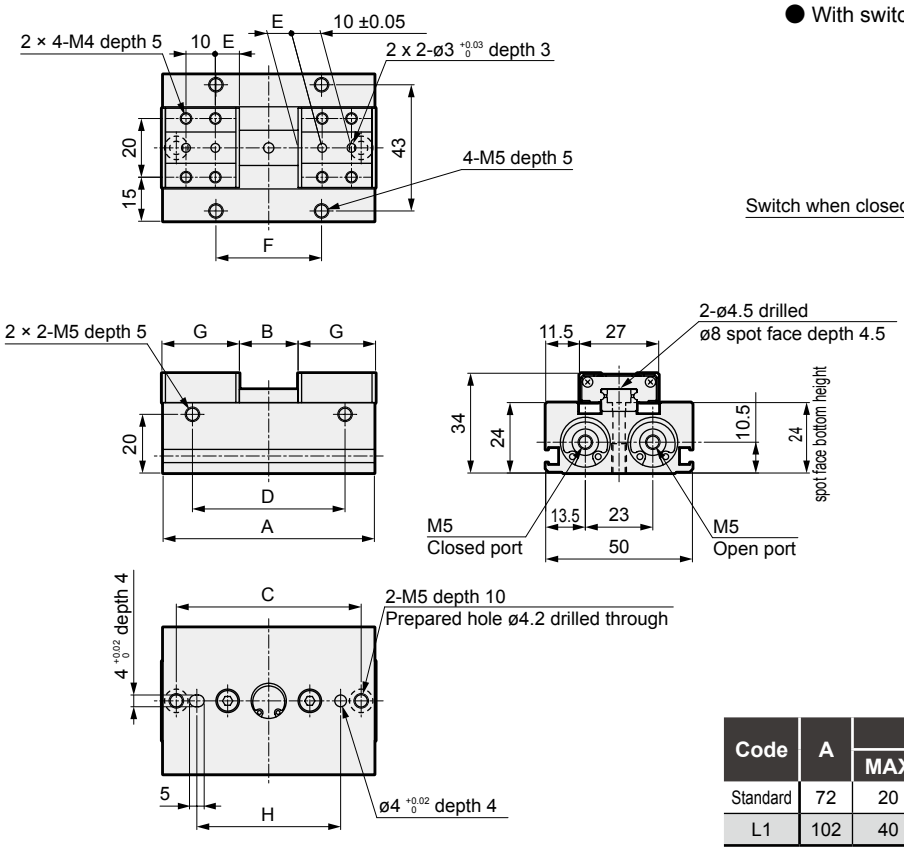

● With switch

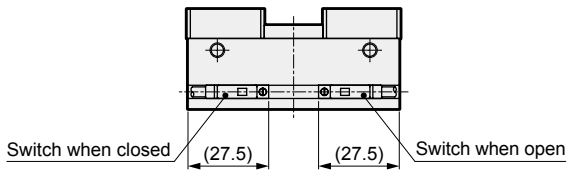

Code	A	B		C	D	E	F	G	H
		MAX	MIN						
Standard	72	20	0	63	52	8.2	36	26.4	46
L1	102	40	0	93	82	10.7	66	31.4	70

● HLF2-16CS-L2

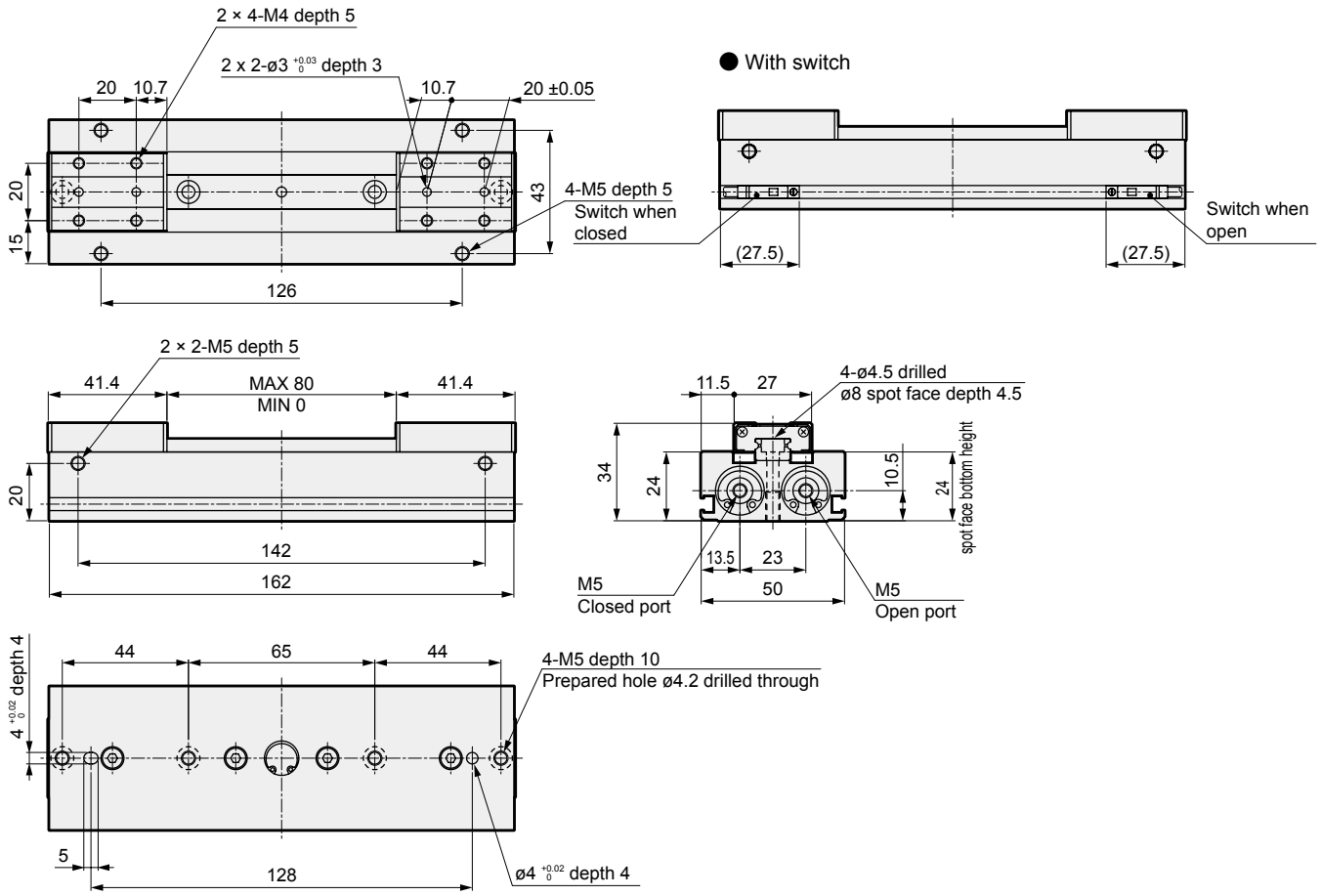

● With switch

Dimensions

● HLF2-20CS Standard/L1

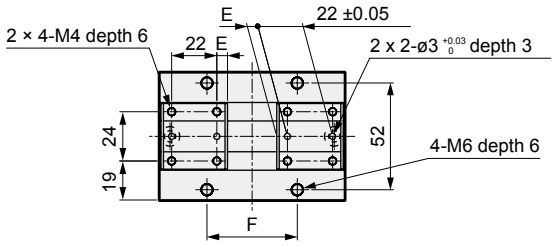

● With switch

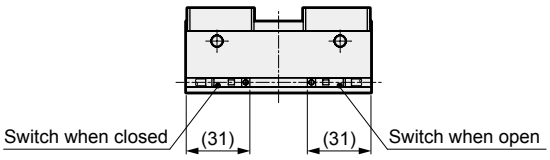

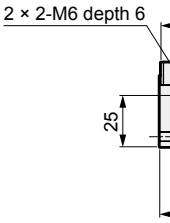

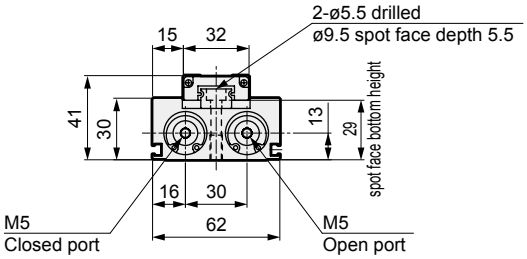

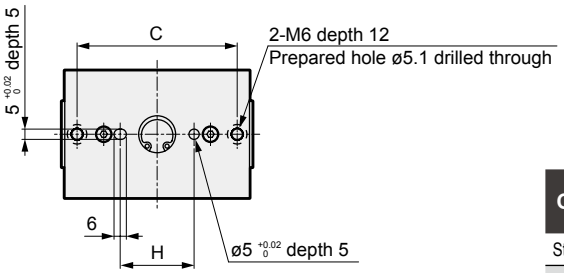

Code	A	B		C	D	E	F	G	H
		MAX	MIN						
Standard	90	24	0	78	60	5.2	44	32.4	36
L1	122	48	0	110	92	8.2	76	38.4	62

● HLF2-20CS-L2

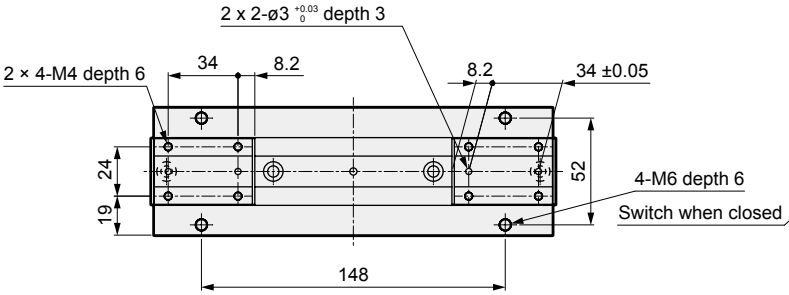

● With switch

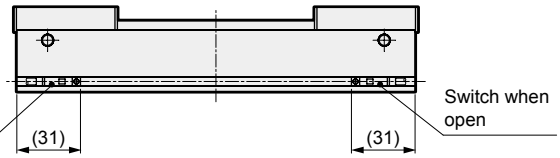

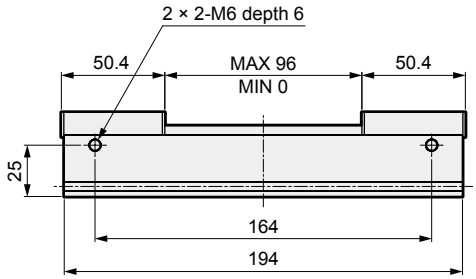

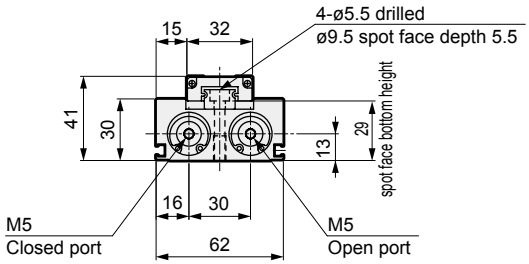

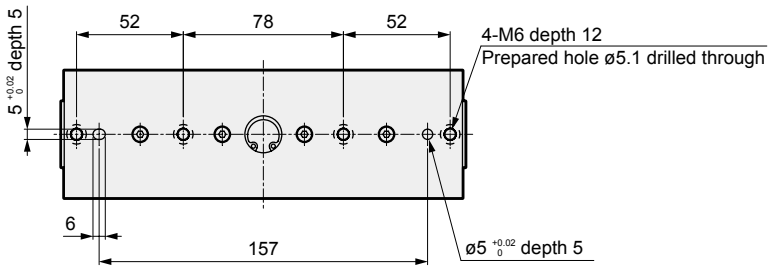

Thin parallel hand (bush/bearing guide) Double acting

HLA/HLB Series

● Operational stroke length: HLA 15, 20, 25 mm
HLB 13, 18, 23 mm

Double acting

RoHS CAD

Specifications

Item		HLA			HLB		
Size		12CS	15CS	20CS	12CS	15CS	20CS
Bore size	mm	ø12	ø15	ø20	ø12	ø15	ø20
Actuation		Double acting					
Working fluid		Compressed air					
Max. working pressure	MPa	0.7 (≈100 psi, 7 bar)					
Min. working pressure	MPa	0.3 (≈44 psi, 3 bar)			0.1 (≈15 psi, 1 bar)		
Ambient temperature	°C	5 (41°F) to 60 (140°F)					
Port size		M5					
Operating stroke length	mm	15	20	25	13	18	23
Volumetric capacity (reciprocating)	cm^3	1.69	3.53	7.85	1.47	3.18	7.22
Repeatability	mm	±0.03			±0.01		
Weight	kg	0.152	0.276	0.504	0.214	0.402	0.678
Lubrication		Not required (use turbine oil class 1 ISO VG32 if necessary for lubrication)					

Switch specifications and variations

Item	Proximity 2-wire	Proximity 3-wire
	K2H, K2V	K3H, K3V
Applications	Dedicated for programmable controller	For programmable controller, relay
Output method	-	NPN output
Power supply voltage	-	10 to 28 VDC
Load voltage/current	10 to 30 VDC, 5 to 20 mA (*1)	30 VDC or less, 50 mA or less
Indicator lamp	LED (Lit when ON)	
Leakage current	1 mA or less	10 μA or less
Weight	1 m:18 g 3 m:49 g 5 m:80 g	

Item	Reed 2-wire	
	K0H/K0V	K5H/K5V
Applications	For programmable controller, relay	For programmable controller, relay, IC circuit (without indicator lamp), serial connection
Power supply voltage	——	
Load voltage/current	12/24 VDC,5 to 50 mA 110 VAC, 7 to 20 mA	5/12/24 VDC, 50 mA or less 110 VAC, 20 mA or less
Indicator lamp	LED (Lit when ON)	None
Leakage current	0 mA	
Weight	1 m:18 g 3 m:49 g 5 m:80 g	

*1 : The above max. load current is 20 mA at 25°C. The current is lower than 20 mA if the operating ambient temperature around the switch is higher than 25˚C. (5 to 10 mA at 60˚C)

*2 : Refer to Ending Page 1 for detailed switch specifications and dimensions.

How to order

Without switch (built-in magnet for switch)

HLA - 12CS

With switch (built-in magnet for switch)

HLA - 12CS - K2H - R

Ⓐ Model No.

Ⓑ Size

Ⓒ Switch model No. *1

Ⓓ Switch quantity

Code	Description
Ⓐ Model No.	
HLA	Bush guide
HLB	Bearing guide

Ⓑ Size
12CS
15CS
20CS

Ⓒ Switch model No.

Axial lead wire	Radial lead wire	Contact	Voltage AC	Voltage DC	Display	Lead wire
K0H*	**K0V***	Reed	●	●	1-color display	2-wire
K5H*	**K5V***	Reed	●	●	no indicator lamp	2-wire
K2H*	**K2V***	Proximity		●	1-color display	2-wire
K3H*	**K3V***	Proximity		●	1-color display	3-wire

*** Lead wire length**	
Blank	1 m (standard)
3	3 m (option)
5	5 m (option)

Ⓓ Switch quantity	
R	1 on open side
H	1 on closed side
D	2

⚠ Precautions for model No. selection

*1: Switches other than Ⓒ Switch model No. are also available. (Made to order)
Refer to Ending Page 1 for details.

[Example of model No.]

HLB-12CS-K2H-R

Model: Thin parallel hand

Ⓐ Model No. : Bearing guide HLB
Ⓑ Size : 12CS
Ⓒ Switch model No. : Proximity K2H switch, lead wire 1 m
Ⓓ Switch quantity : 1 on open side

How to order switch

SW - K2H

Switch model No.
(Item Ⓒ above)

Internal structure and parts list

● HLA-12CS to 20CS

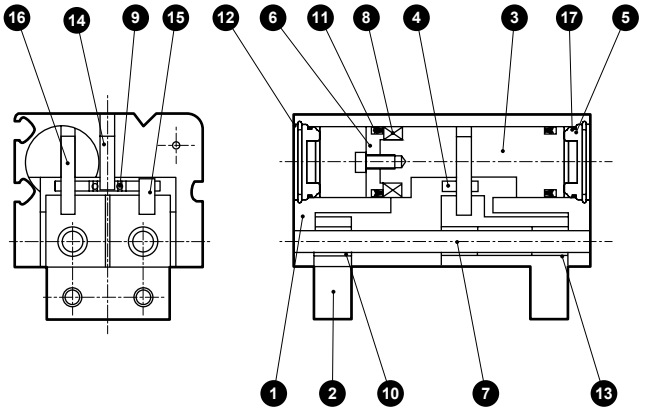

● HLB-12CS to 20CS

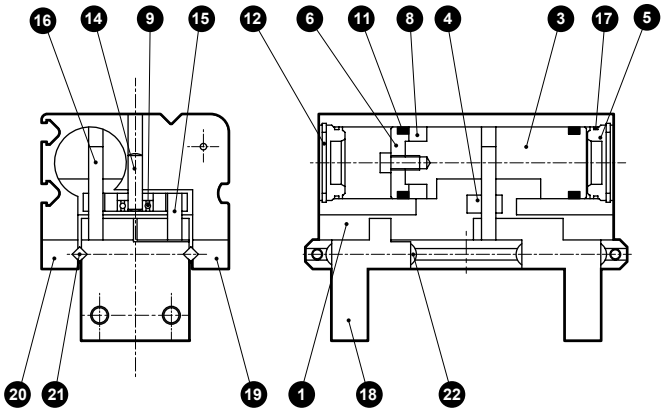

Cannot be disassembled

No.	Part name	Material	Remarks	No.	Part name	Material	Remarks
1	Body	Aluminum alloy		12	Snap ring	Stainless steel	
2	Finger	Aluminum alloy		13	Bush	Sintering oil impregnated alloy	
3	Piston	Stainless steel		14	Parallel pin	Steel	
4	Cam	Stainless steel		15	Needle roller A	Alloy steel	
5	Cylinder guard	Acetal resin		16	Needle roller B	Alloy steel	
6	Magnet holder	Aluminum alloy		17	Cylinder gasket	Nitrile rubber	
7	Guide rod	Alloy steel		18	Master key	Steel	
8	Magnet			19	Bearing guide A	Steel	
9	Small diameter sphere bearing	Alloy steel		20	Bearing guide B	Steel	
10	Bush	Sintering oil impregnated alloy		21	Cross roller	Alloy steel	
11	Piston packing	Nitrile rubber		22	Truss machine screw	Stainless steel	

Gripping power performance data

- Gripping power represents the thrust (per one finger) in the arrow direction shown in the figure.
- The gripping power in the opening/closing directions with finger length L of hand with a supply pressure of 0.3, 0.5 and 0.7 MPa is shown.

● Both open direction (⇦) and closed direction (➡) ——— (shown with continuous line)

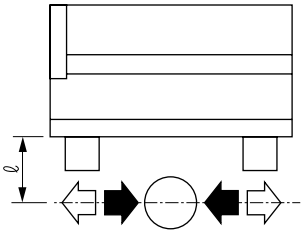

(Note) When making a selection, read the precautions for design and selection on page 1764.

● HLA-12CS

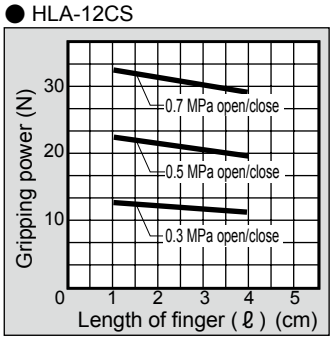

● HLA-15CS

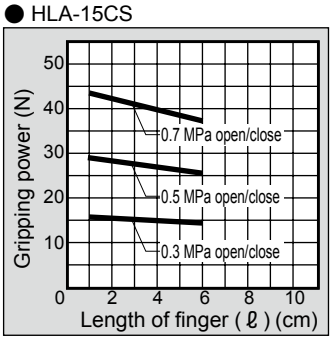

● HLA-20CS

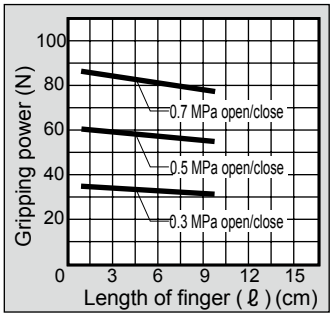

● HLB-12CS

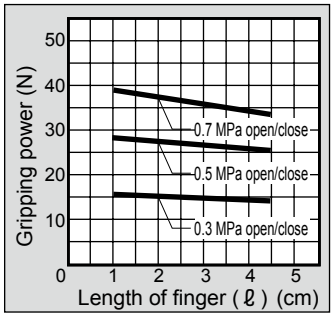

● HLB-15CS

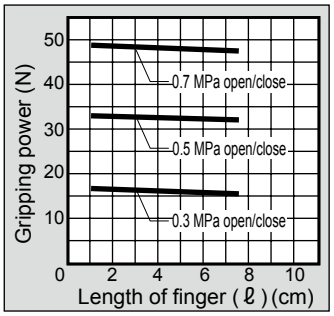

● HLB-20CS

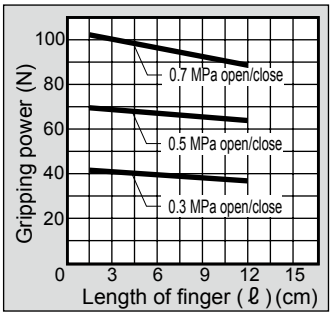

Dimensions

● HLA-12CS Standard

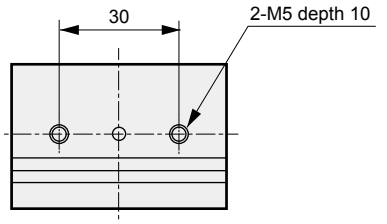

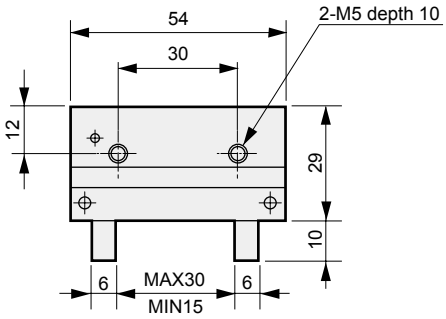

● With switch

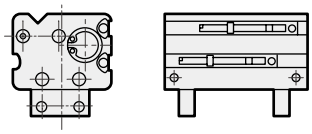

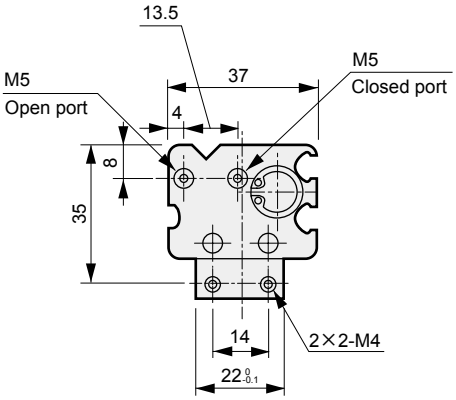

● HLA-15CS Standard

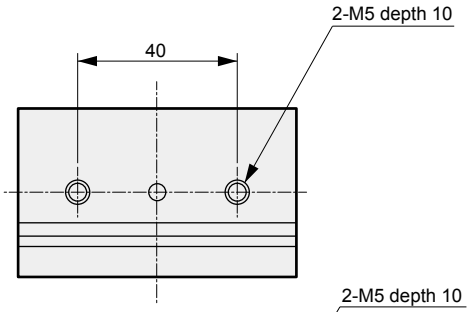

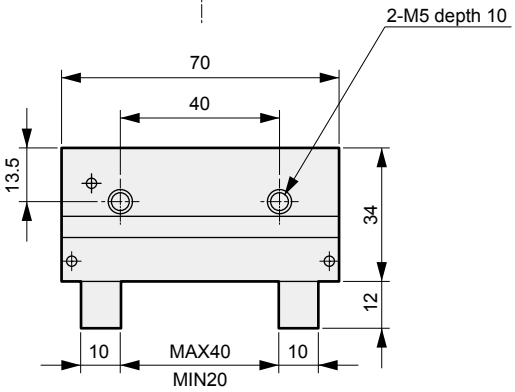

● With switch

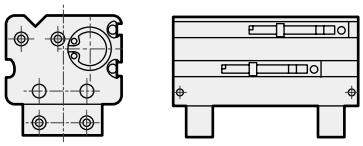

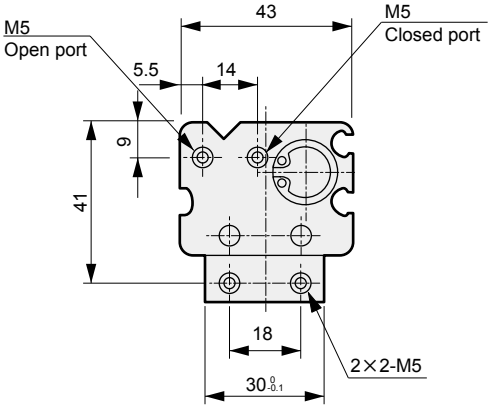

LCM
LCR
LCG
LCW
LCX
STM
STG
STS/STL
STR2
UCA2
ULK*
JSK/M2
JSG
JSC3/JSC4
USSD
UFCD
USC
UB
JSB3
LMB
LML
HCM
HCA
LBC
CAC4
UCAC2
CAC-N
UCAC-N
RCS2
RCC2
PCC
SHC
MCP
GLC
MFC
BBS
RRC
GRC
RV3*
NHS
HRL
LN
Hand
Chuk
MecHnd/Chuk
ShkAbs
FJ
FK
SpdContr
Ending
LSH-HP
LSH
FH100
BSA2
BHA/BHG
LHA
LHAG
HAP
HKP
HCP
HGP
HLF2
HLA/HLB
HLAG/HLBG
HLC
HLD
HMF
HMF-G
HMFB
HFP
FH500
HBL
HJL
HMD
HDL
HJD
BHE

Dimensions

● HLA-20CS Standard

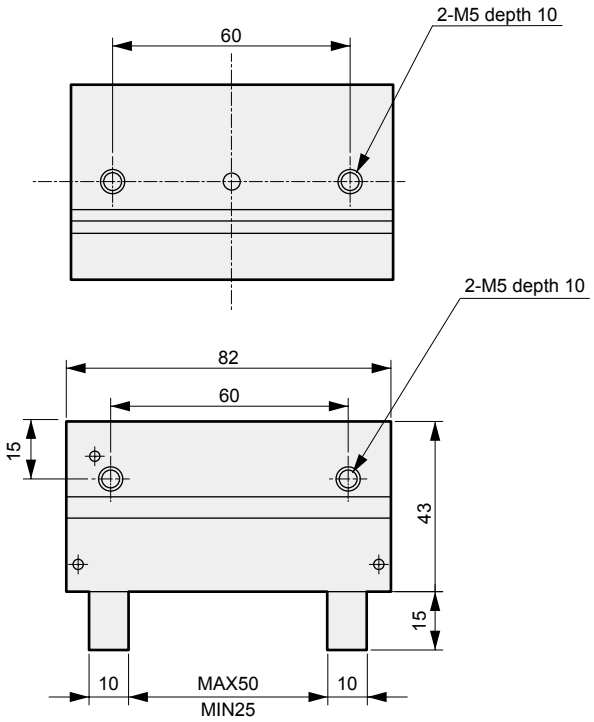

● With switch

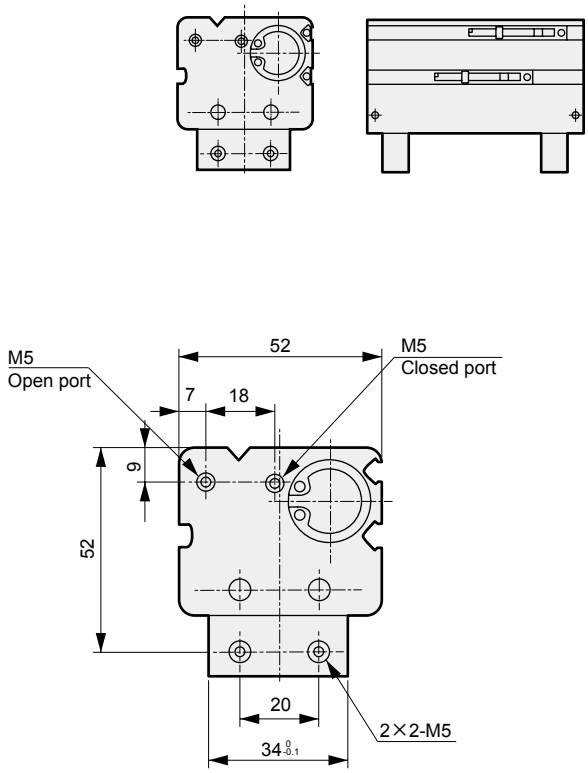

Dimensions

● HLB-12CS Standard

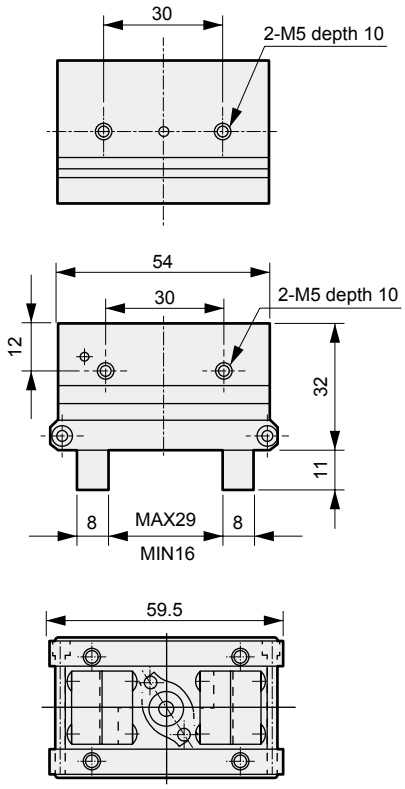

● With switch

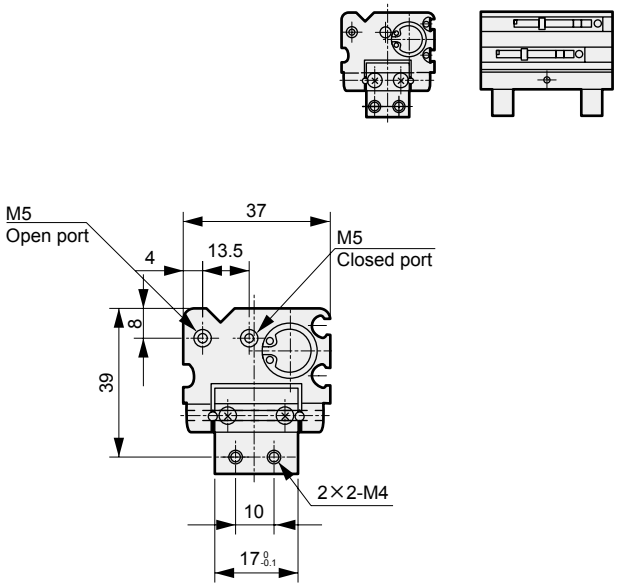

● HLB-15CS Standard

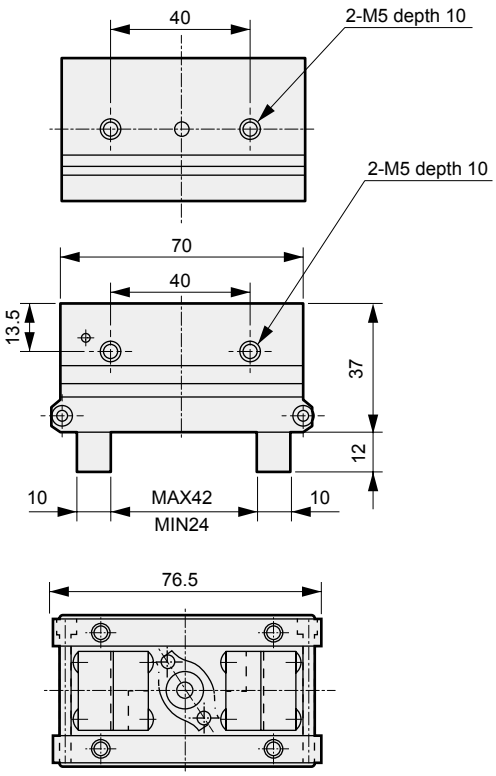

● With switch

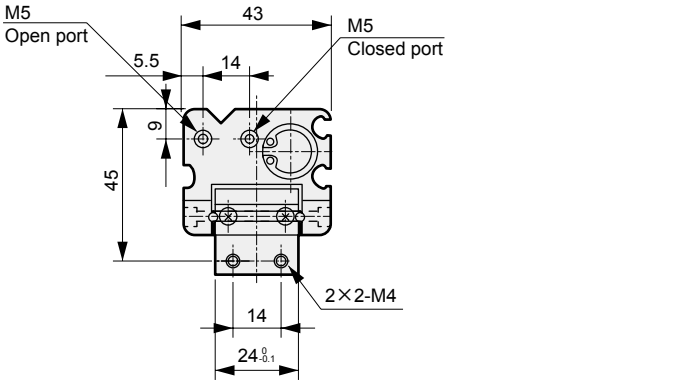

LCM
LCR
LCG
LCW
LCX
STM
STG
STS/STL
STR2
UCA2
ULK*
JSK/M2
JSG
JSC3/JSC4
USSD
UFCD
USC
UB
JSB3
LMB
LML
HCM
HCA
LBC
CAC4
UCAC2
CAC-N
UCAC-N
RCS2
RCC2
PCC
SHC
MCP
GLC
MFC
BBS
RRC
GRC
RV3*
NHS
HRL
LN
Hand
Chuk
MecHnd/Chuk
ShkAbs
FJ
FK
SpdContr
Ending
LSH-HP
LSH
FH100
BSA2
BHA/BHG
LHA
LHAG
HAP
HKP
HCP
HGP
HLF2
HLA/HLB
HLAG/HLBG
HLC
HLD
HMF
HMF-G
HMFB
HFP
FH500
HBL
HJL
HMD
HDL
HJD
BHE

Dimensions

● HLB-20CS Standard

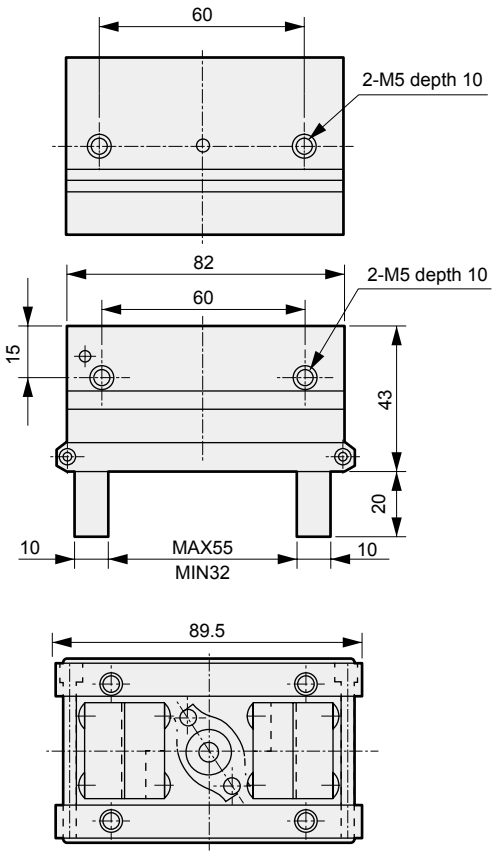

● With switch

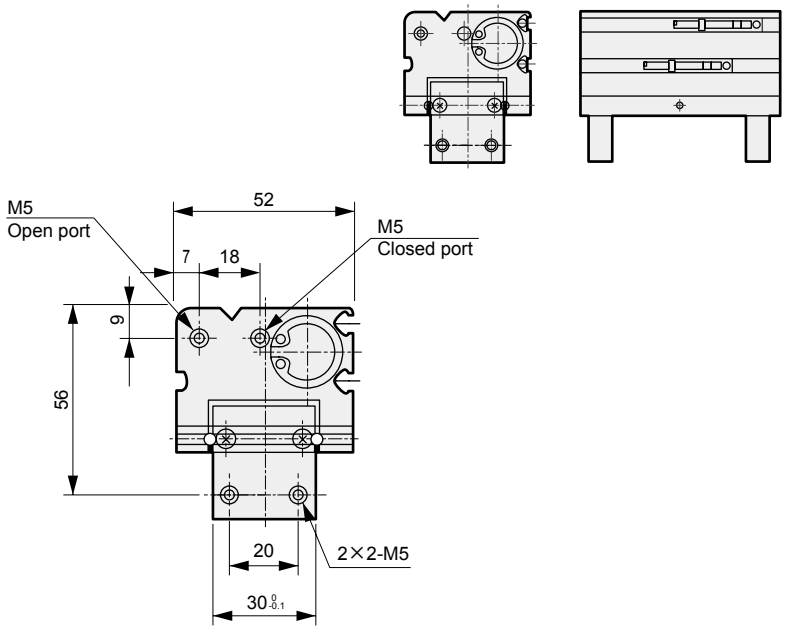

MEMO

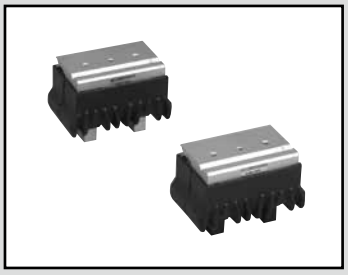

Thin parallel hand with rubber cover (bush/bearing guide)
Double acting

HLAG/HLBG Series

● Operational stroke length: HLAG 15, 20, 25 mm
HLBG 13, 18, 23 mm

Double acting

RoHS CAD

Specifications

Item	HLAG-12CS	HLAG-15CS	HLAG-20CS	HLBG-12CS	HLBG-15CS	HLBG-20CS
Bore size mm	ø12	ø15	ø20	ø12	ø15	ø20
Actuation	Double acting					
Working fluid	Compressed air					
Max. working pressure MPa	0.7 (≈100 psi, 7 bar)					
Min. working pressure MPa	0.3 (≈44 psi, 3 bar)			0.2 (≈29 psi, 2 bar)		
Ambient temperature °C	5 (41°F) to 60 (140°F)					
Port size	M5					
Operating stroke length mm	15	20	25	13	18	23
Volumetric capacity (reciprocating) cm^3	1.69	3.53	7.85	1.47	3.18	7.22
Repeatability mm	±0.03			±0.01		
Weight kg	0.175	0.305	0.545	0.24	0.42	0.75
Lubrication	Not required (use turbine oil class 1 ISO VG32 if necessary for lubrication)					

Switch specifications

Item	Proximity 2-wire	Proximity 3-wire
	K2H	K3H
Applications	Dedicated for programmable controller	For programmable controller, relay
Output method	—	NPN output
Power supply voltage	—	10 to 28 VDC
Load voltage/current	10 to 30 VDC, 5 to 20 mA (*1)	30 VDC or less, 50 mA or less
Indicator lamp	LED (Lit when ON)	
Leakage current	1 mA or less	10 μA or less
Weight	1 m:18 g 3 m:49 g 5 m:80 g	

Item	Reed 2-wire	
	K0H	K5H
Applications	For programmable controller, relay	For programmable controller, relay, IC circuit (without indicator lamp), serial connection
Power supply voltage	—	
Load voltage/current	12/24 VDC, 5 to 50 mA 110 VAC, 7 to 20 mA	5/12/24 VDC, 50 mA or less 110 VAC, 20 mA or less
Indicator lamp	LED (Lit when ON)	None
Leakage current	0 mA	
Weight	1 m:18 g 3 m:49 g 5 m:80 g	

*1 : The above max. load current is 20 mA at 25°C. If the operating ambient temperature around the switch is higher than 25°C, the current is lower than 20 mA. (5 to 10 mA at 60°C)

*2 : Refer to Ending Page 1 for detailed switch specifications and dimensions.

How to order

Without switch (built-in magnet for switch)

HLAG - 12CS

With switch (built-in magnet for switch)

HLAG - 12CS - K2H - R

Ⓐ Model No.

Ⓑ Size

Ⓒ Switch model No.

Ⓓ Switch quantity

Code	Description
Ⓐ Model No.	
HLAG	Bush guide
HLBG	Bearing guide

Ⓑ Size
12CS
15CS
20CS

Ⓒ Switch model No.

Axial lead wire	Contact	Voltage AC	Voltage DC	Display	Lead wire
K0H*	Reed	●	●	1-color display	2-wire
K5H*	Reed	●	●	no indicator lamp	2-wire
K2H*	Proximity		●	1-color display	2-wire
K3H*	Proximity		●	1-color display	3-wire

*** Lead wire length**	
Blank	1 m (standard)
3	3 m (option)
5	5 m (option)

Ⓓ Switch quantity	
R	1 on open side
H	1 on closed side
D	2

[Example of model No.]

HLAG-12CS-K2H-R

Model: Rubber covered thin parallel hand

Ⓐ Model No. : Bush guide HLAG
Ⓑ Size : 12CS
Ⓒ Switch model No.: Proximity switch K2H, lead wire 1 m
Ⓓ Switch quantity : 1 on open side

How to order switch

SW - K2H

Switch model No.
(Item Ⓒ above)

Specifications for rechargeable battery

(Catalog No. CC-1226A)

HLBG - … - P4*

● Design compatible with rechargeable battery manufacturing process.

* Contact CKD for details.

LCM
LCR
LCG
LCW
LCX
STM
STG
STS/STL
STR2
UCA2
ULK*
JSK/M2
JSG
JSC3/JSC4
USSD
UFCD
USC
UB
JSB3
LMB
LML
HCM
HCA
LBC
CAC4
UCAC2
CAC-N
UCAC-N
RCS2
RCC2
PCC
SHC
MCP
GLC
MFC
BBS
RRC
GRC
RV3*
NHS
HRL
LN
Hand
Chuk
MecHnd/Chuk
ShkAbs
FJ
FK
SpdContr
Ending
LSH-HP
LSH
FH100
BSA2
BHA/BHG
LHA
LHAG
HAP
HKP
HCP
HGP
HLF2
HLA/HLB
HLAG/HLBG
HLC
HLD
HMF
HMF-G
HMFB
HFP
FH500
HBL
HJL
HMD
HDL
HJD
BHE

Internal structure and parts list

● HLAG-12CS to 20CS

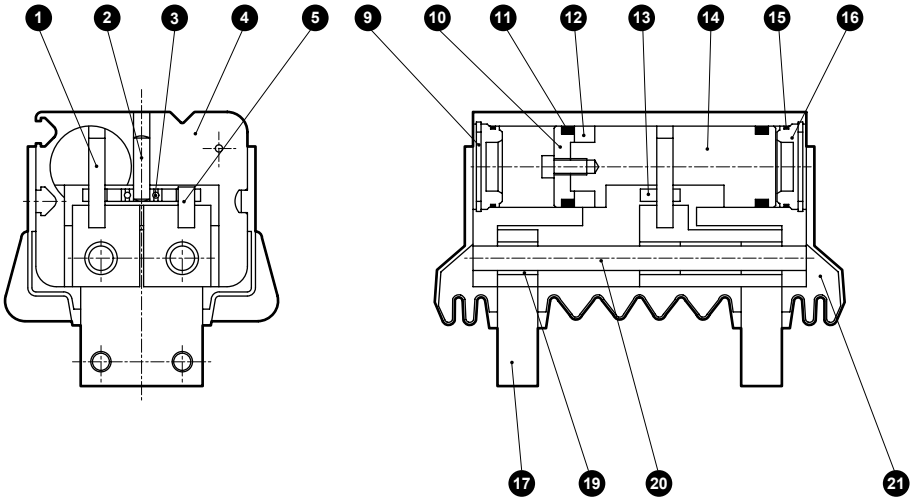

● HLBG-12CS to 20CS

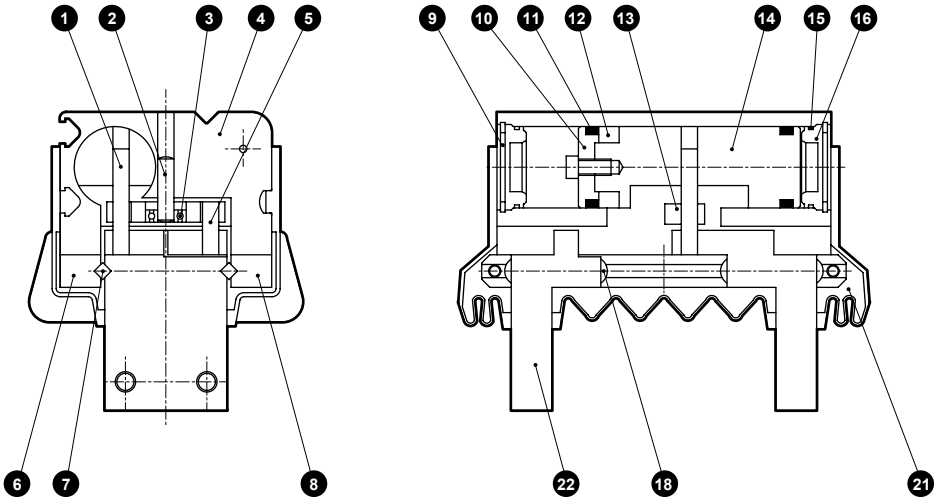

Cannot be disassembled

Parts list

No.	Part name	Material	Remarks	No.	Part name	Material	Remarks
1	Needle roller B	High carbon chrome bearing steel		12	Magnet		
2	Parallel pin	Steel		13	Cam	Stainless steel	
3	Small diameter sphere bearing	Alloy steel		14	Piston	Stainless steel	
4	Body	Aluminum alloy		15	Cylinder gasket	Nitrile rubber	
5	Needle roller A	High carbon chrome bearing steel		16	Cylinder guard	Resin	
6	Bearing guide B	Steel		17	Finger	Aluminum alloy	
7	Cross roller	High carbon chrome bearing steel		18	Truss machine screw	Stainless steel	
8	Bearing guide A	Steel		19	Bush	Sintering oil impregnated alloy	
9	Snap ring	Stainless steel		20	Guide rod	High carbon chrome bearing steel	
10	Magnet holder	Aluminum alloy		21	Rubber cover	Nitrile rubber	
11	Piston packing	Nitrile rubber		22	Master key	Steel	

Gripping power performance data

- Gripping power represents the thrust (per one finger) in the arrow direction shown in the figure.
- The gripping power in the opening/closing directions with finger length L of hand with a supply pressure of 0.3, 0.5 and 0.7 MPa is shown.
  - ● Both open direction (⇦) and closed direction (⬅)
    ——— (shown with continuous line)

(Note) When making a selection, read the precautions for design and selection on page 1764.

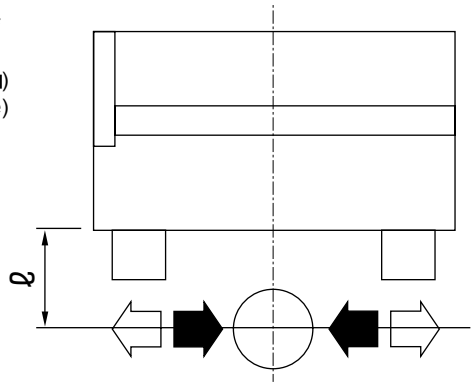

● HLAG-12CS

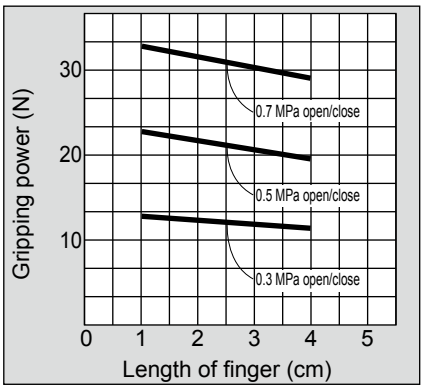

● HLAG-15CS

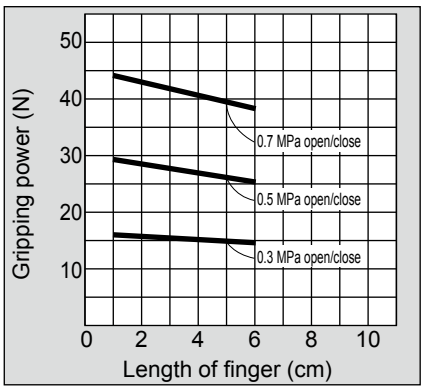

● HLAG-20CS

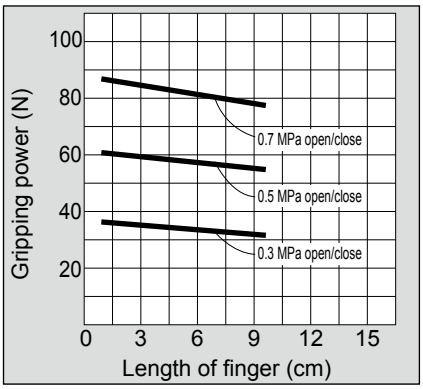

● HLBG-12CS

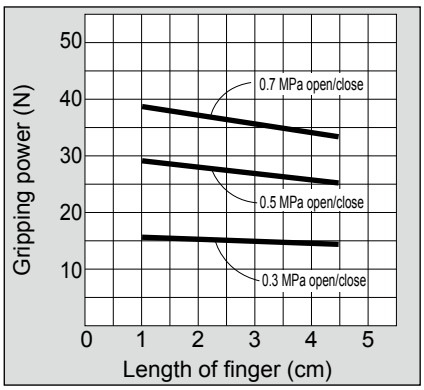

● HLBG-15CS

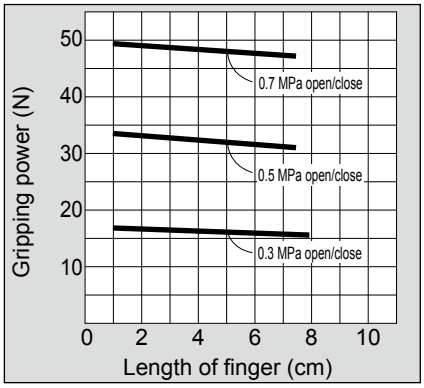

● HLBG-20CS

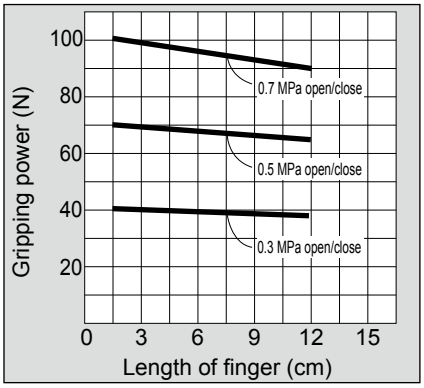

LCM
LCR
LCG
LCW
LCX
STM
STG
STS/STL
STR2
UCA2
ULK*
JSK/M2
JSG
JSC3/JSC4
USSD
UFCD
USC
UB
JSB3
LMB
LML
HCM
HCA
LBC
CAC4
UCAC2
CAC-N
UCAC-N
RCS2
RCC2
PCC
SHC
MCP
GLC
MFC
BBS
RRC
GRC
RV3*
NHS
HRL
LN
Hand
Chuk
MecHnd/Chuk
ShkAbs
FJ
FK
SpdContr
Ending
LSH-HP
LSH
FH100
BSA2
BHA/BHG
LHA
LHAG
HAP
HKP
HCP
HGP
HLF2
HLA/HLB
HLAG/HLBG
HLC
HLD
HMF
HMF-G
HMFB
HFP
FH500
HBL
HJL
HMD
HDL
HJD
BHE

Dimensions CAD

● HLAG-12CS Standard

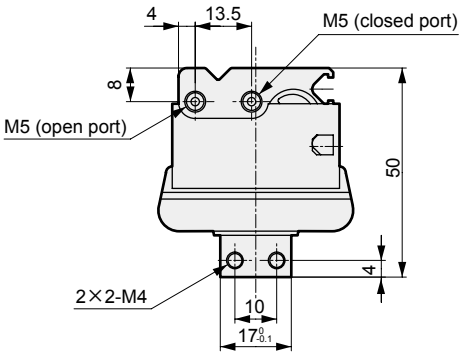

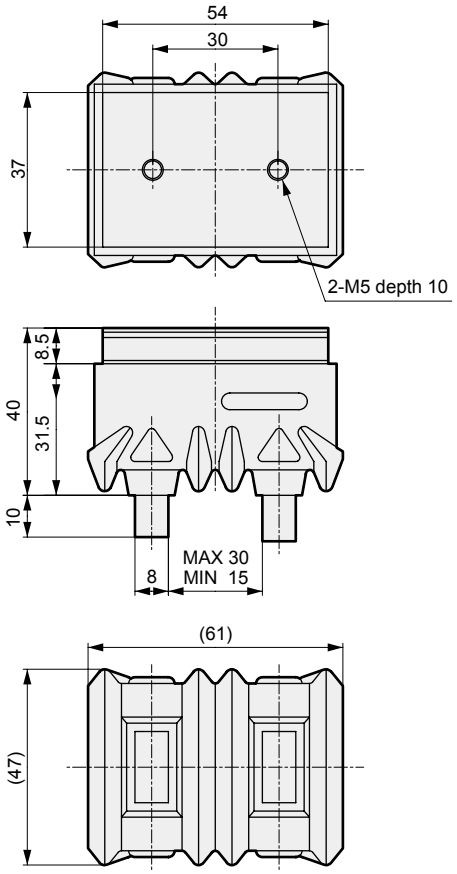

● With switch

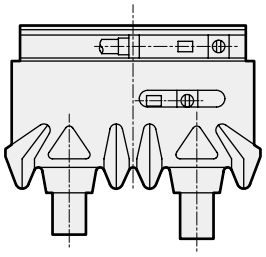

● HLAG-15CS Standard

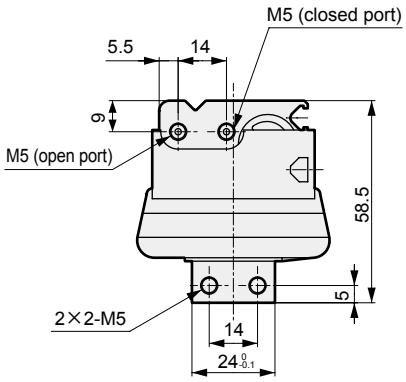

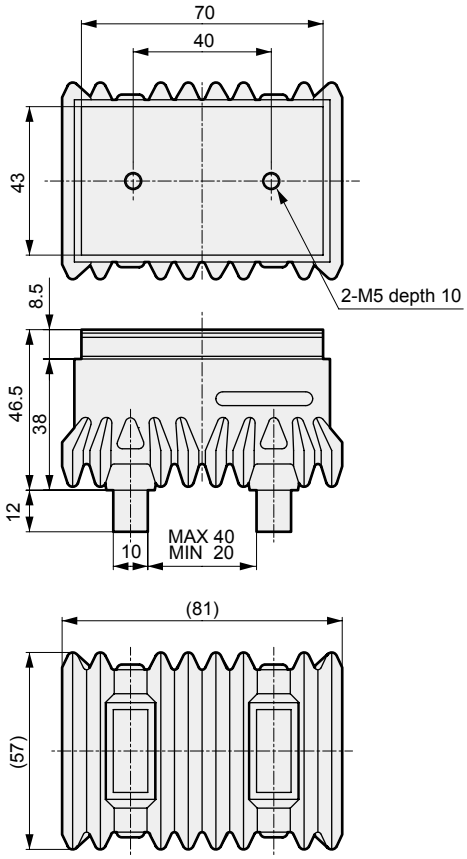

● With switch

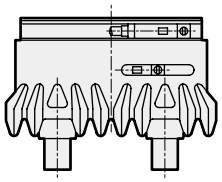

Dimensions

● HLAG-20CS Standard

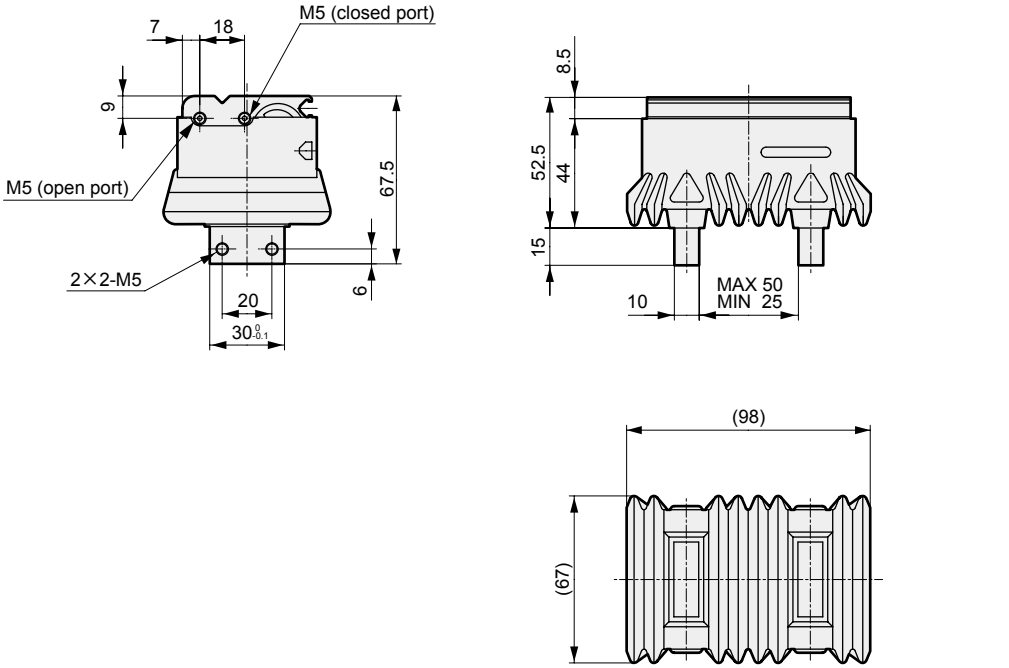

● With switch

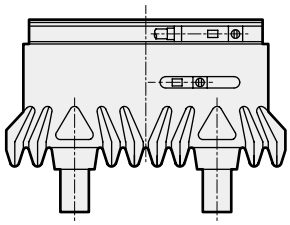

LCM
LCR
LCG
LCW
LCX
STM
STG
STS/STL
STR2
UCA2
ULK*
JSK/M2
JSG
JSC3/JSC4
USSD
UFCD
USC
UB
JSB3
LMB
LML
HCM
HCA
LBC
CAC4
UCAC2
CAC-N
UCAC-N
RCS2
RCC2
PCC
SHC
MCP
GLC
MFC
BBS
RRC
GRC
RV3*
NHS
HRL
LN
Hand
Chuk
MecHnd/Chuk
ShkAbs
FJ
FK
SpdContr
Ending
LSH-HP
LSH
FH100
BSA2
BHA/BHG
LHA
LHAG
HAP
HKP
HCP
HGP
HLF2
HLA/HLB
HLAG/HLBG
HLC
HLD
HMF
HMF-G
HMFB
HFP
FH500
HBL
HJL
HMD
HDL
HJD
BHE

Dimensions CAD

● HLBG-12CS Standard

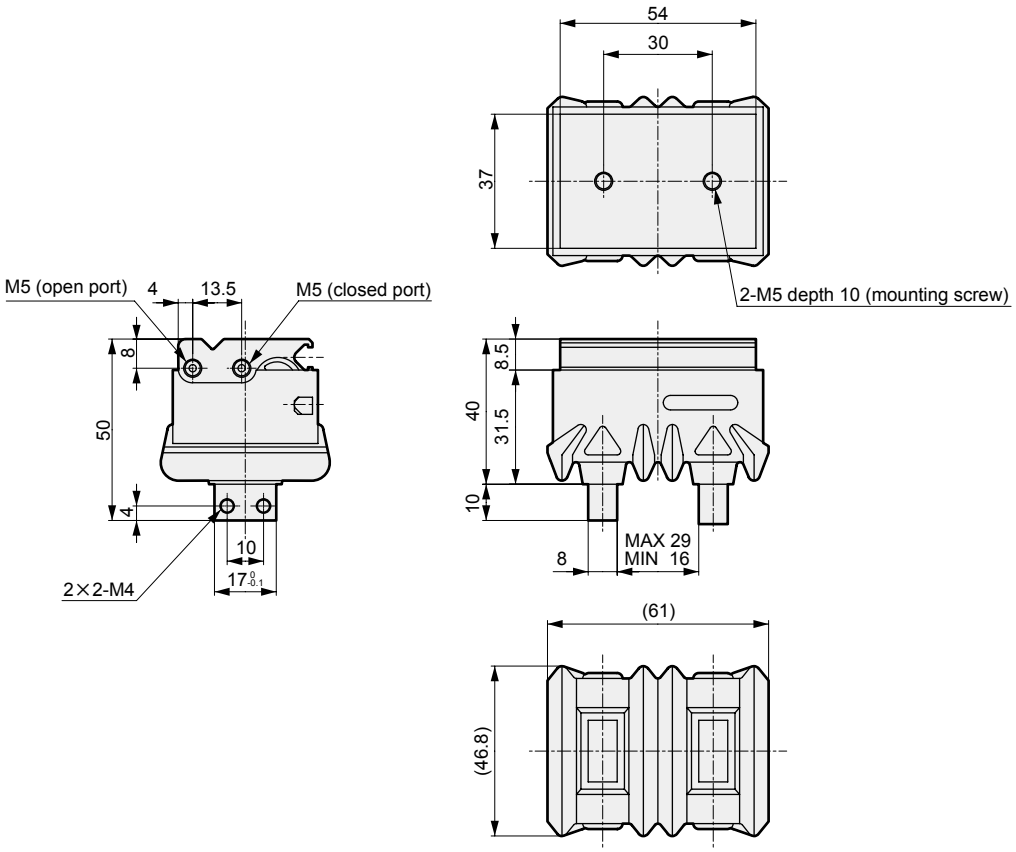

● With switch

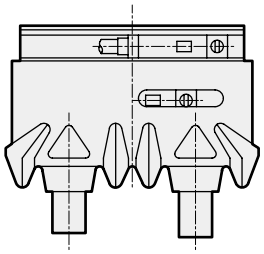

● HLBG-15CS Standard

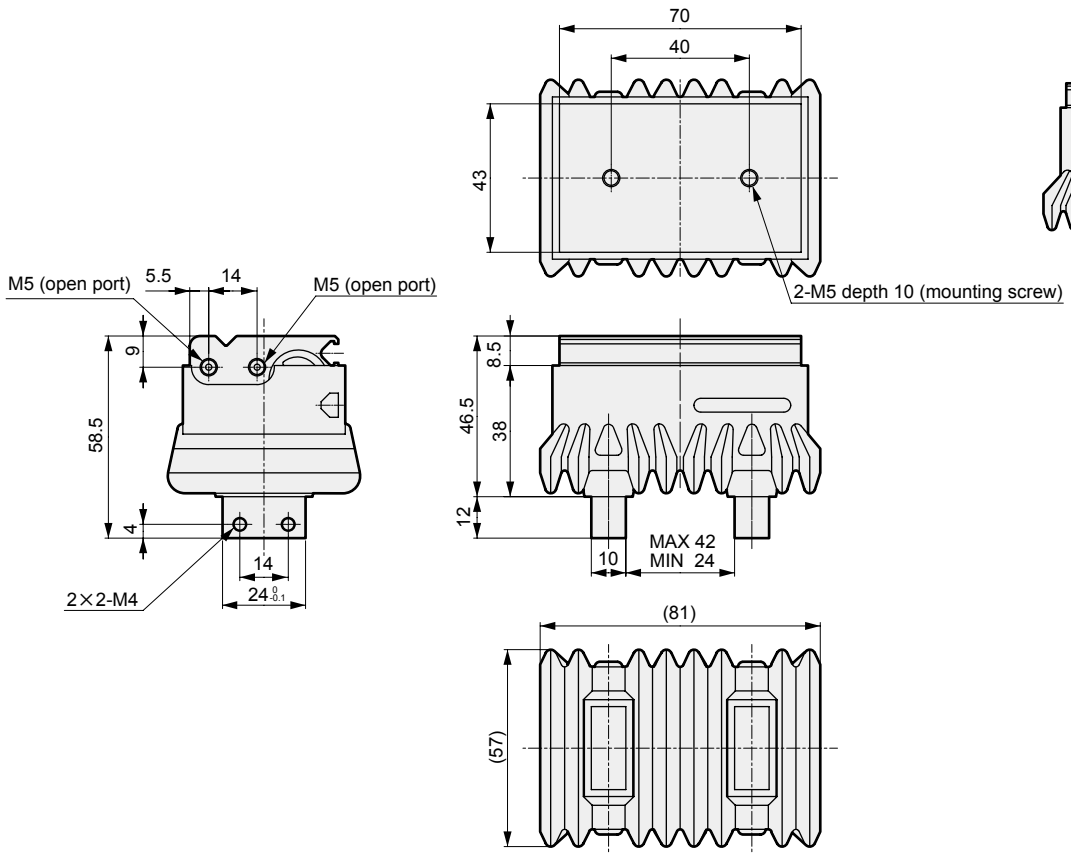

● With switch

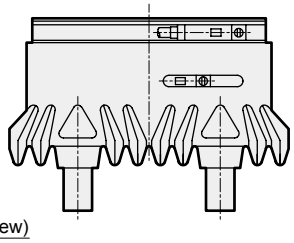

Dimensions

● HLBG-20CS Standard

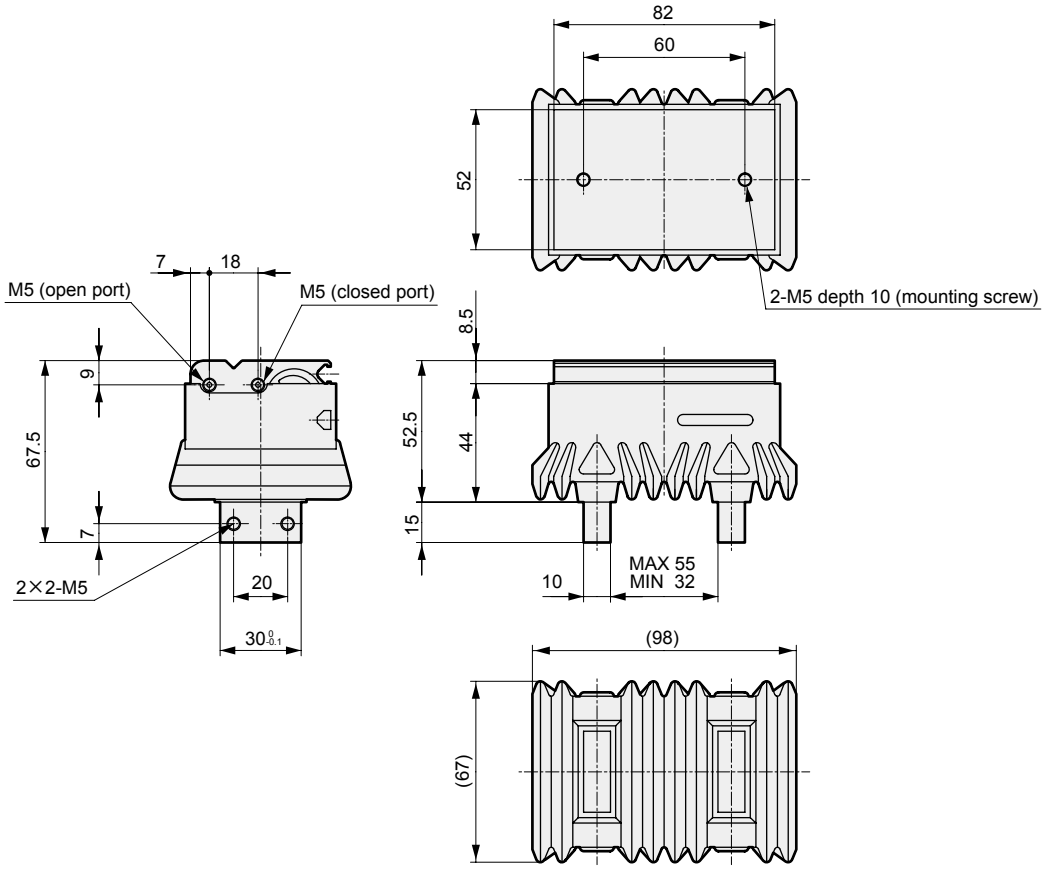

● With switch

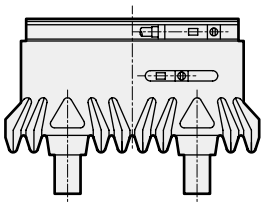

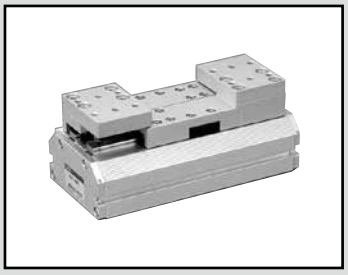

Thin long stroke parallel hand Double acting
(Standard/long stroke 1)

HLC Series

● Operating stroke length: Standard 20, 30, 40, 50, 60, 70
Long stroke 1 60, 80, 100, 120, 140

Double acting

RoHS CAD

Specifications

Item	HLC										
Size	08CS	12CS		16CS		20CS		25CS		30CS	
	Standard	Standard	L1	Standard	L1	Standard	L1	Standard	L1	Standard	L1
Bore size mm	ø8×2	ø12×2		ø16×2		ø20×2		ø25×2		ø30×2	
Working fluid	Compressed air										
Max. working pressure MPa	0.7 (≈100 psi, 7 bar)										
Min. working pressure MPa	0.2 (≈29 psi, 2 bar)										
Ambient temperature °C	5 (41°F) to 60 (140°F)										
Port size	M3			M5							
Operating stroke length mm	20	30	60	40	80	50	100	60	120	70	140
Volumetric capacity (reciprocating) cm^3	2.0	6.8	13.6	16.1	32.2	31.4	62.8	58.9	117.8	99	198
Repeatability mm	±0.01			±0.03							
Weight kg	0.14	0.29	0.44	0.71	0.85	1.03	1.4	1.62	2.23	2.74	3.69
Lubrication	Not required (use turbine oil class 1 ISO VG32 if necessary for lubrication)										

Switch specifications

Item	Proximity 2-wire	Proximity 3-wire
	T2H/V	T3H/V
Applications	Dedicated for programmable controller	For programmable controller, relay
Output method	-	NPN output
Power supply voltage	-	10 to 28 VDC
Load voltage/current	10 to 30 VDC, 5 to 20 mA (*1)	30 VDC or less, 100 mA or less
Indicator lamp	LED (Lit when ON)	
Leakage current	1 mA or less	10 μA or less
Weight	1 m:18 g 3 m:49 g 5 m:80 g	

*1 : The above max. load current is 20 mA at 25°C. The current is lower than 20 mA if the operating ambient temperature around the switch is higher than 25˚C. (5 to 10 mA at 60˚C)

*2 : Refer to Ending Page 1 for detailed switch specifications and dimensions.

HLC allowable load and allowable moment

Max load / moment	F	Mx	Mz	My
Model No.	N	N·m	N·m	N·m
HLC-08CS	102	10	8.5	1.6
HLC-12CS	151	11.9	8.2	4.68
HLC-12CS-L1	151	11.9	8.2	4.68
HLC-16CS	325	27.5	25.6	7.96
HLC-16CS-L1	325	27.5	25.6	10.6
HLC-20CS	306	29.9	27	10.6
HLC-20CS-L1	306	29.9	27	11.2
HLC-25CS	423	105.1	96.4	19.7
HLC-25CS-L1	423	105.1	96.4	19.7
HLC-30CS	694	109.3	116.5	33.3
HLC-30CS-L1	694	109.3	116.5	43.1

*The values above are static load and moment.

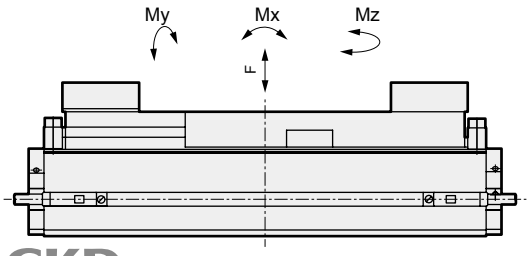

How to order

Without switch (built-in magnet for switch)

HLC - 20CS - L1

With switch (built-in magnet for switch)

HLC - 20CS - L1 - T2H - R

Ⓐ Size

Ⓑ Option

Ⓒ Switch model No.
* indicates the lead wire length.

Ⓓ Switch quantity

Code	Description
Ⓐ Size	
08CS	
12CS	
16CS	
20CS	
25CS	
30CS	

Ⓑ Option

	Size	08CS	12CS	16CS	20CS	25CS	30CS
Blank	Standard	●	●	●	●	●	●
L1	Long stroke 1		●	●	●	●	●

Ⓒ Switch model No.

Axial lead wire	Radial lead wire	Contact	Voltage AC	Voltage DC	Display	Lead wire
T2H*	**T2V***	Proximity		●	1-color display	2-wire
T3H*	**T3V***			●		3-wire

*** Lead wire length**	
Blank	1 m (standard)
3	3 m (option)
5	5 m (option)

Ⓓ Switch quantity

R	1 on open side
H	1 on closed side
D	2

[Example of model No.]

HLC-20CS-L1-T2H-R

Model: Thin long stroke parallel hand

Ⓐ Size : 20CS
Ⓑ Option : Long stroke 1
Ⓒ Switch model No. : Proximity T2H switch, lead wire 1 m
Ⓓ Switch quantity : 1 on open side

How to order switch

SW - T2H

Switch model No.
(Item Ⓒ above)

Specifications for rechargeable battery

(Catalog No. CC-1226A)

HLC - … - P4*

● Design compatible with rechargeable battery manufacturing process.

* Contact CKD for details.

LCM
LCR
LCG
LCW
LCX
STM
STG
STS/STL
STR2
UCA2
ULK*
JSK/M2
JSG
JSC3/JSC4
USSD
UFCD
USC
UB
JSB3
LMB
LML
HCM
HCA
LBC
CAC4
UCAC2
CAC-N
UCAC-N
RCS2
RCC2
PCC
SHC
MCP
GLC
MFC
BBS
RRC
GRC
RV3*
NHS
HRL
LN
Hand
Chuk
MecHnd/Chuk
ShkAbs
FJ
FK
SpdContr
Ending
LSH-HP
LSH
FH100
BSA2
BHA/BHG
LHA
LHAG
HAP
HKP
HCP
HGP
HLF2
HLA/HLB
HLAG/HLBG
HLC
HLD
HMF
HMF-G
HMFB
HFP
FH500
HBL
HJL
HMD
HDL
HJD
BHE

Internal structure and parts list

● HLC-08CS (Standard)

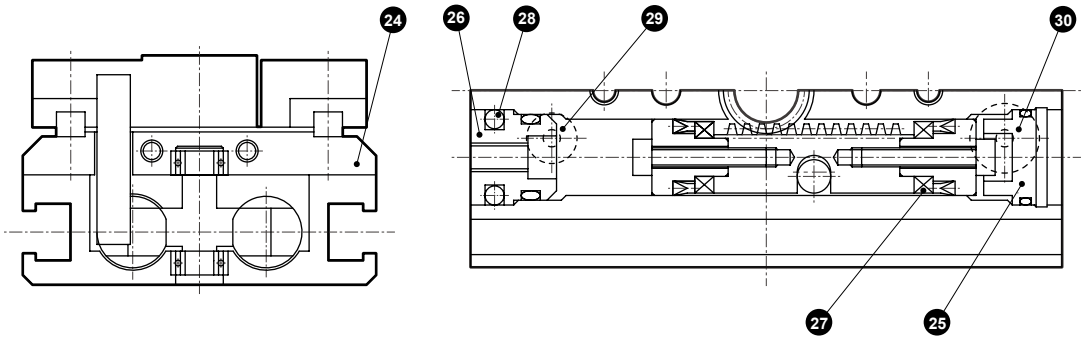

● HLC-12CS to 30CS (Standard)
● HLC-12CS to 30CS-L1

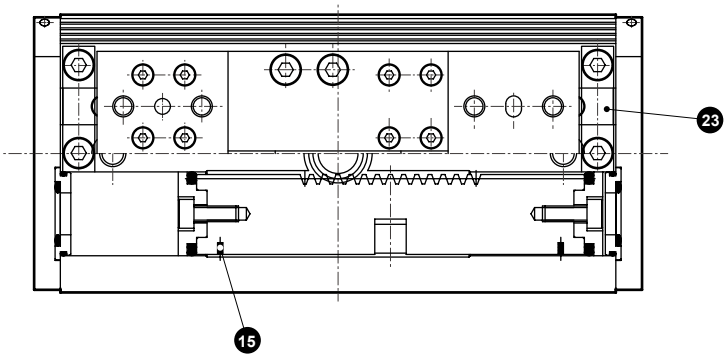

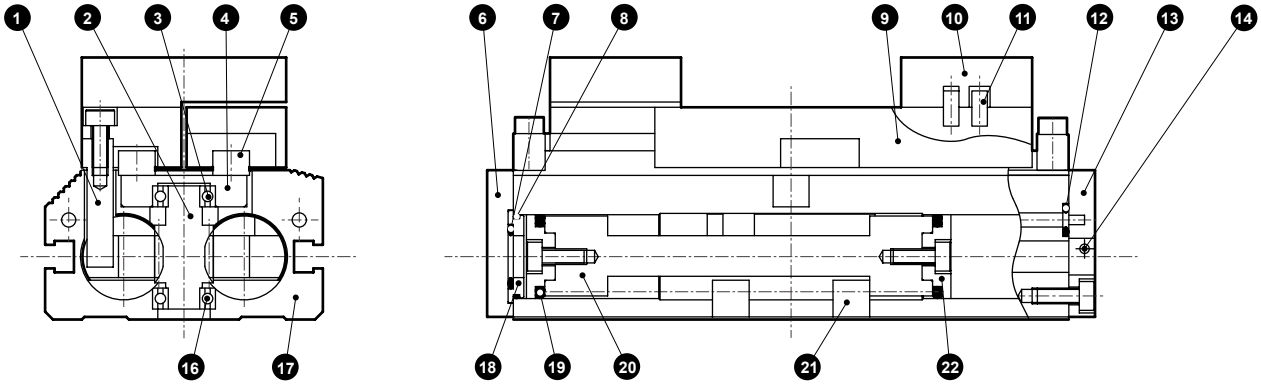

Cannot be disassembled

Parts list

No.	Part name	Material	Remarks	No.	Part name	Material	Remarks
1	Rack joint	Carbon steel		16	Single row deep groove ball bearing		20CS only
2	Pinion	Stainless steel		17	Body	Aluminum alloy	
3	Single row deep groove ball bearing			18	Cylinder guard 1	Aluminum alloy	
4	Bearing holder *1	Aluminum alloy		19	Piston seal	Nitrile rubber	
5	LM guide			20	Rack	Stainless steel	
6	Side plate 2 *1	Aluminum alloy		21	Key *2	16CS to 25CS are carbon steel and 30CS is stainless steel	
7	Cylinder sealant 1	Nitrile rubber		22	Piston	Acetal resin	
8	Cylinder sealant 2	Nitrile rubber		23	Stiffening plate	Stainless steel	16CS, 20CS only
9	LM plate *2	Aluminum alloy		24	Linear guide mounting base	Aluminum alloy	
10	Finger	Aluminum alloy		25	Cylinder guard 2	Acetal resin	
11	Positioning pin			26	Cylinder guard 3	Aluminum alloy	
12	Gasket 1	Nitrile rubber		27	Magnet		
13	Side plate 1 *1	Aluminum alloy		28	Rotation-stop pin	Stainless steel	
14	Steel ball	Stainless steel		29	Gasket 2	Nitrile rubber	
15	Semicircle magnet			30	Gasket 3	Nitrile rubber	

*1: Not supplied with 08CS.
*2: Not supplied with 08CS and 12CS.

Gripping power performance data

- Gripping power represents the thrust (per one finger) in the arrow direction shown in the figure.
- The gripping power with finger length L of hand and a supply pressure of 0.3, 0.5 and 0.7 MPa is shown.

● Both open direction (⇦) and closed direction (➡)
——— (shown with continuous line)

(Note) When making a selection, read the precautions for design and selection on page 1764.

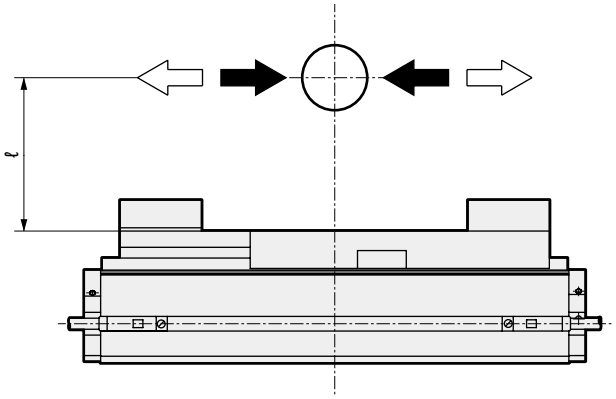

● HLC-08CS

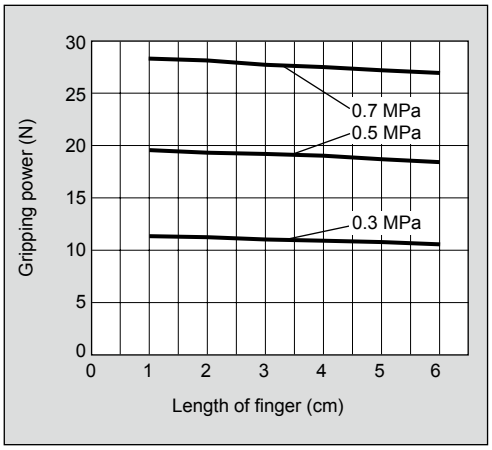

● HLC-12CS

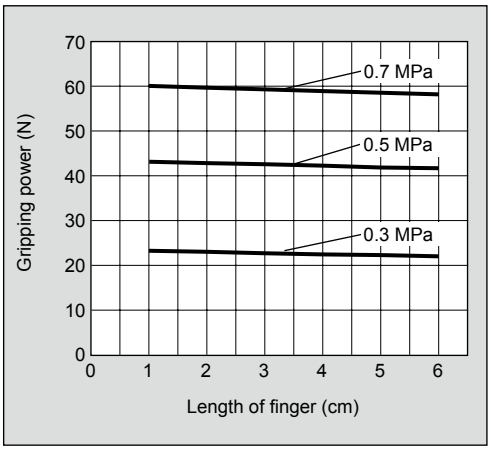

● HLC-16CS

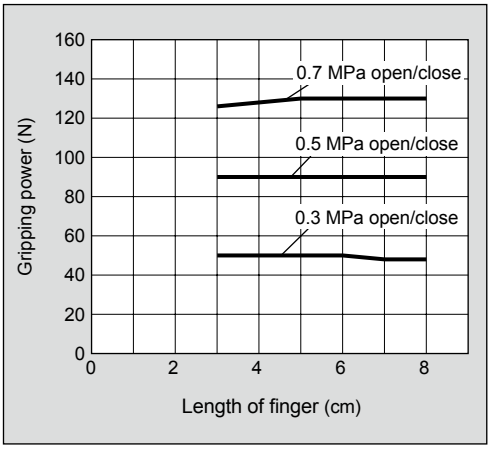

● HLC-20CS

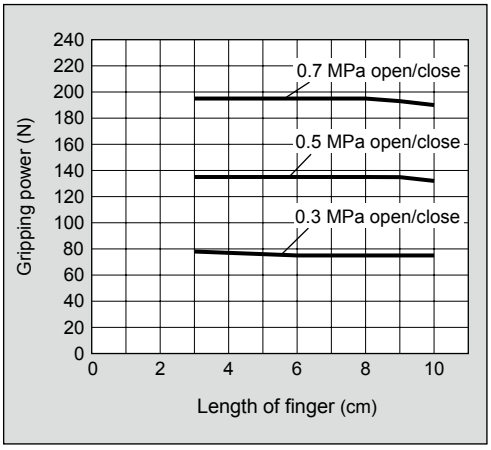

● HLC-25CS

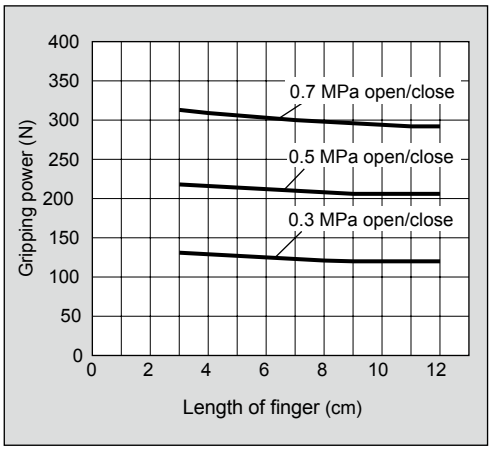

● HLC-30CS

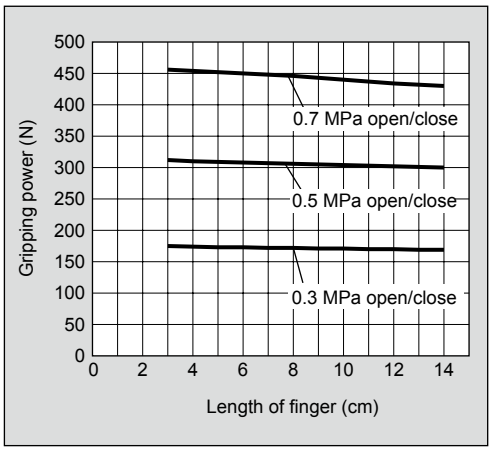

LCM
LCR
LCG
LCW
LCX
STM
STG
STS/STL
STR2
UCA2
ULK*
JSK/M2
JSG
JSC3/JSC4
USSD
UFCD
USC
UB
JSB3
LMB
LML
HCM
HCA
LBC
CAC4
UCAC2
CAC-N
UCAC-N
RCS2
RCC2
PCC
SHC
MCP
GLC
MFC
BBS
RRC
GRC
RV3*
NHS
HRL
LN
Hand
Chuk
MecHnd/Chuk
ShkAbs
FJ
FK
SpdContr
Ending
LSH-HP
LSH
FH100
BSA2
BHA/BHG
LHA
LHAG
HAP
HKP
HCP
HGP
HLF2
HLA/HLB
HLAG/HLBG
HLC
HLD
HMF
HMF-G
HMFB
HFP
FH500
HBL
HJL
HMD
HDL
HJD
BHE

Dimensions CAD

● HLC-08CS Standard

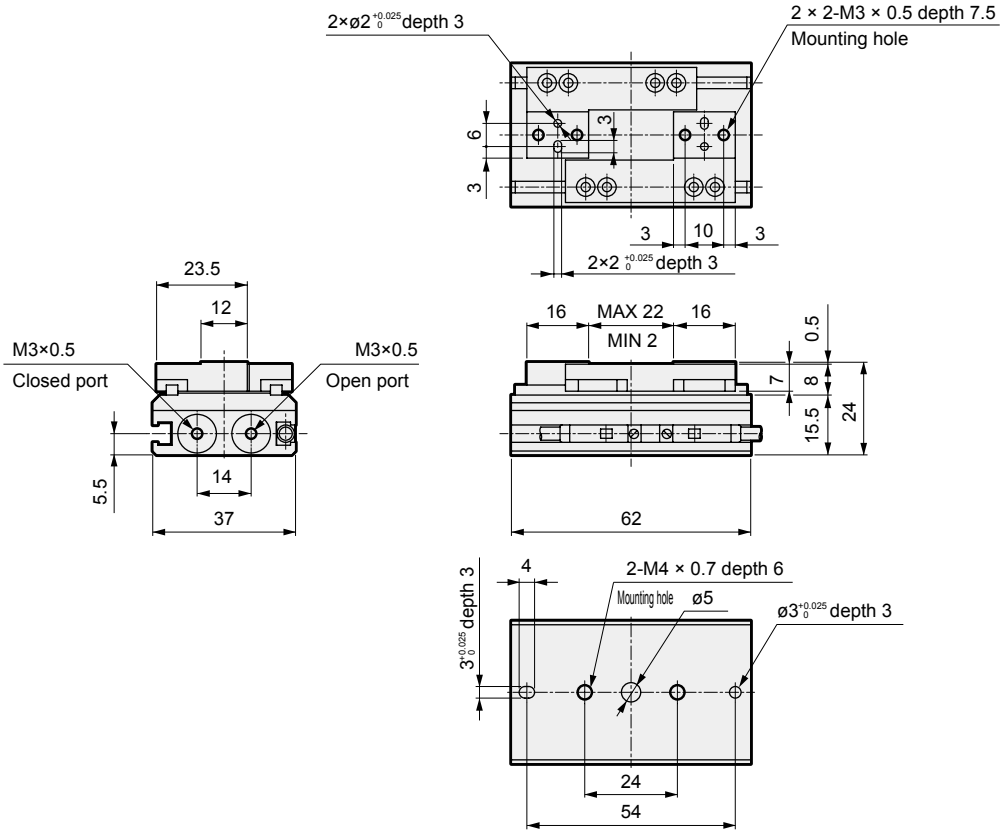

● HLC-12CS Standard/L1

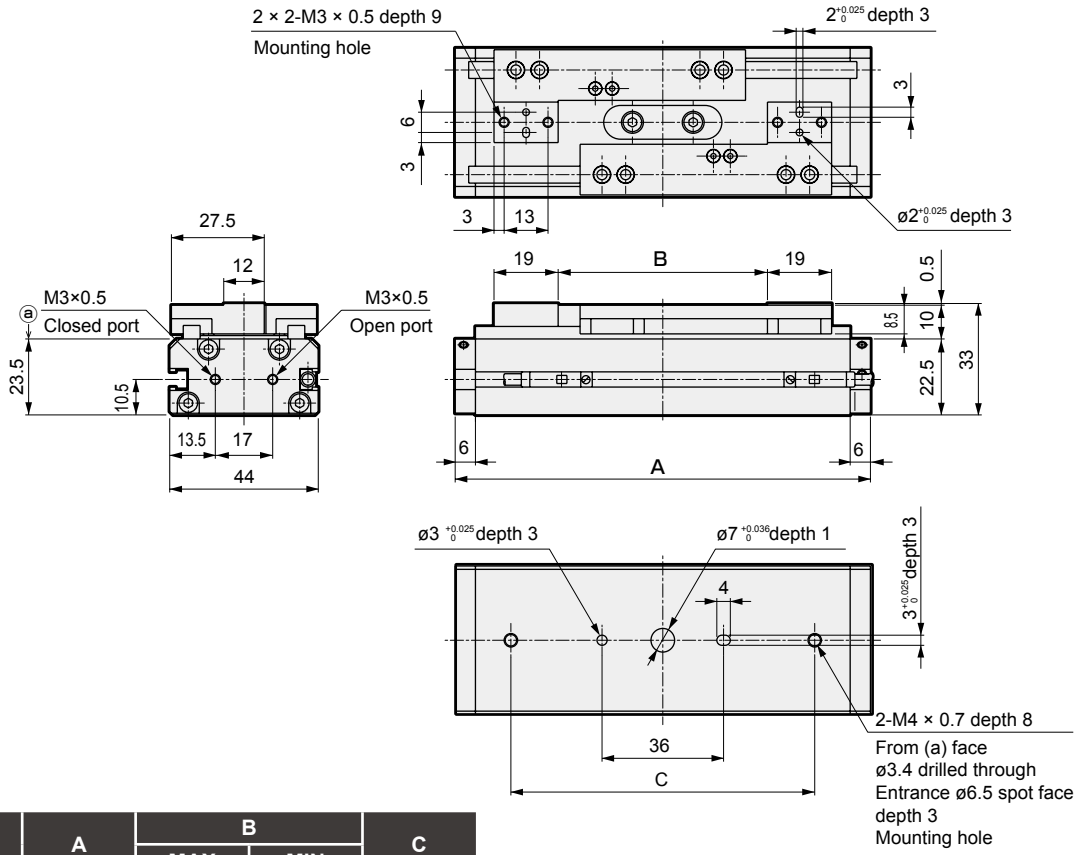

Code	A	B		C
		MAX	MIN	
Standard	78	32	2	54
L1	123	62	2	90

Dimensions

● HLC-16CS Standard/L1

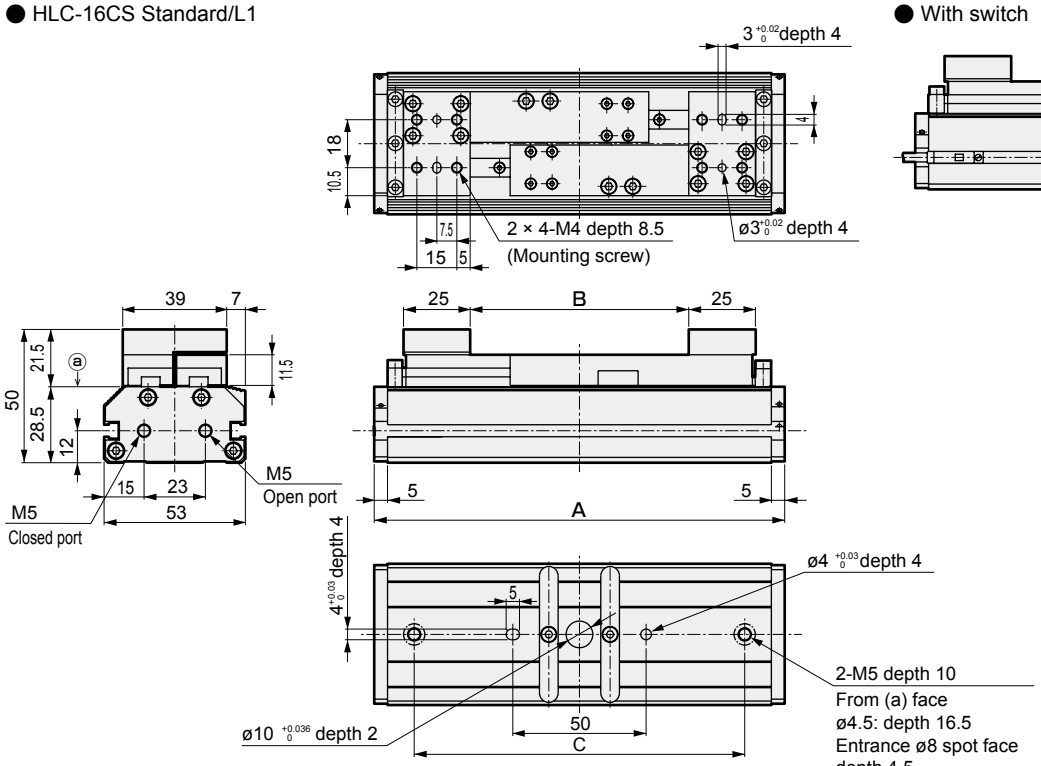

● With switch

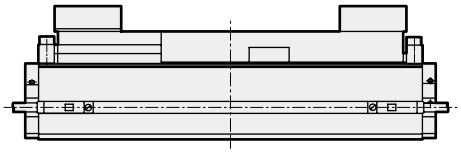

Code	A	B		C
		MAX	MIN	
Standard	116	42	2	86
L1	154	82	2	124

● HLC-20CS Standard/L1

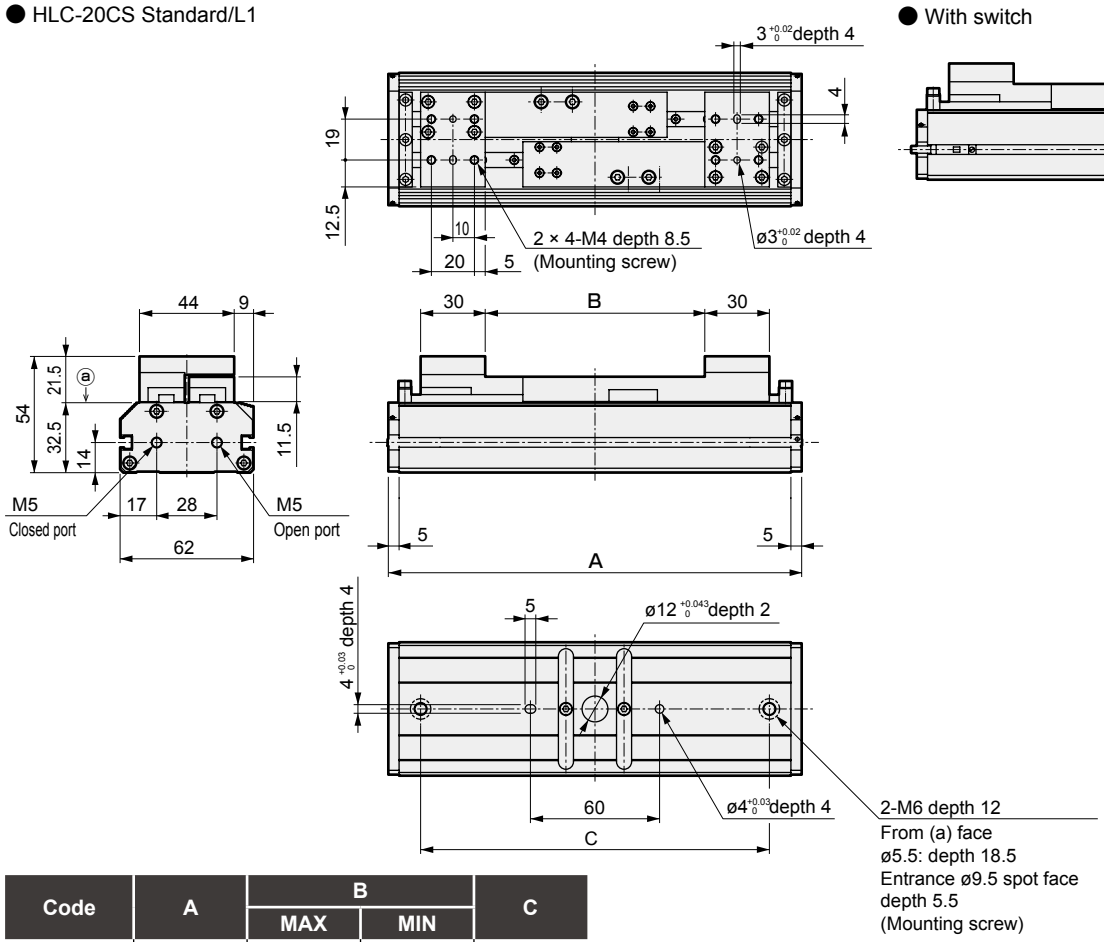

● With switch

Code	A	B		C
		MAX	MIN	
Standard	132	52	2	102
L1	192	102	2	162

LCM
LCR
LCG
LCW
LCX
STM
STG
STS/STL
STR2
UCA2
ULK*
JSK/M2
JSG
JSC3/JSC4
USSD
UFCD
USC
UB
JSB3
LMB
LML
HCM
HCA
LBC
CAC4
UCAC2
CAC-N
UCAC-N
RCS2
RCC2
PCC
SHC
MCP
GLC
MFC
BBS
RRC
GRC
RV3*
NHS
HRL
LN
Hand
Chuk
MecHnd/Chuk
ShkAbs
FJ
FK
SpdContr
Ending
LSH-HP
LSH
FH100
BSA2
BHA/BHG
LHA
LHAG
HAP
HKP
HCP
HGP
HLF2
HLA/HLB
HLAG/HLBG
HLC
HLD
HMF
HMF-G
HMFB
HFP
FH500
HBL
HJL
HMD
HDL
HJD
BHE

Dimensions CAD

● HLC-25CS Standard/L1

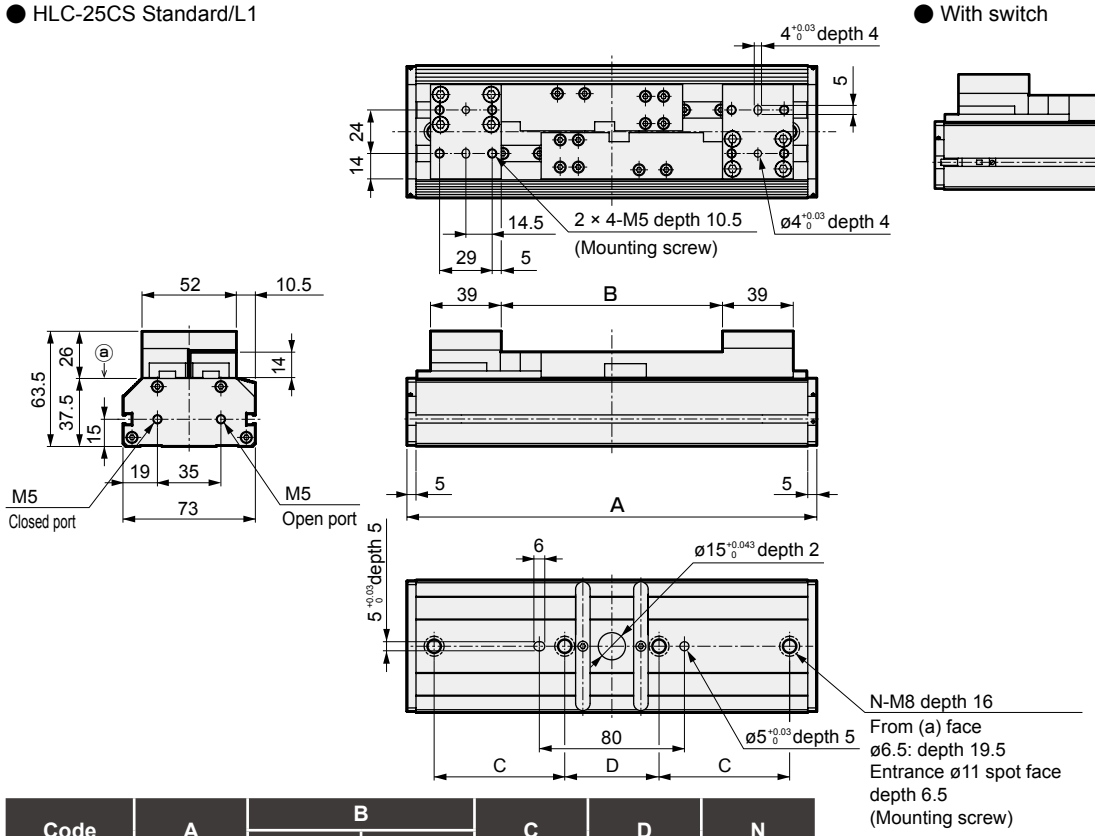

● With switch

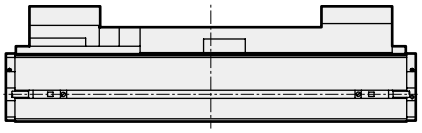

Code	A	B		C	D	N
		MAX	MIN			
Standard	152	62	2	0	122	2
L1	226	122	2	72	52	4

● HLC-30CS Standard/L1

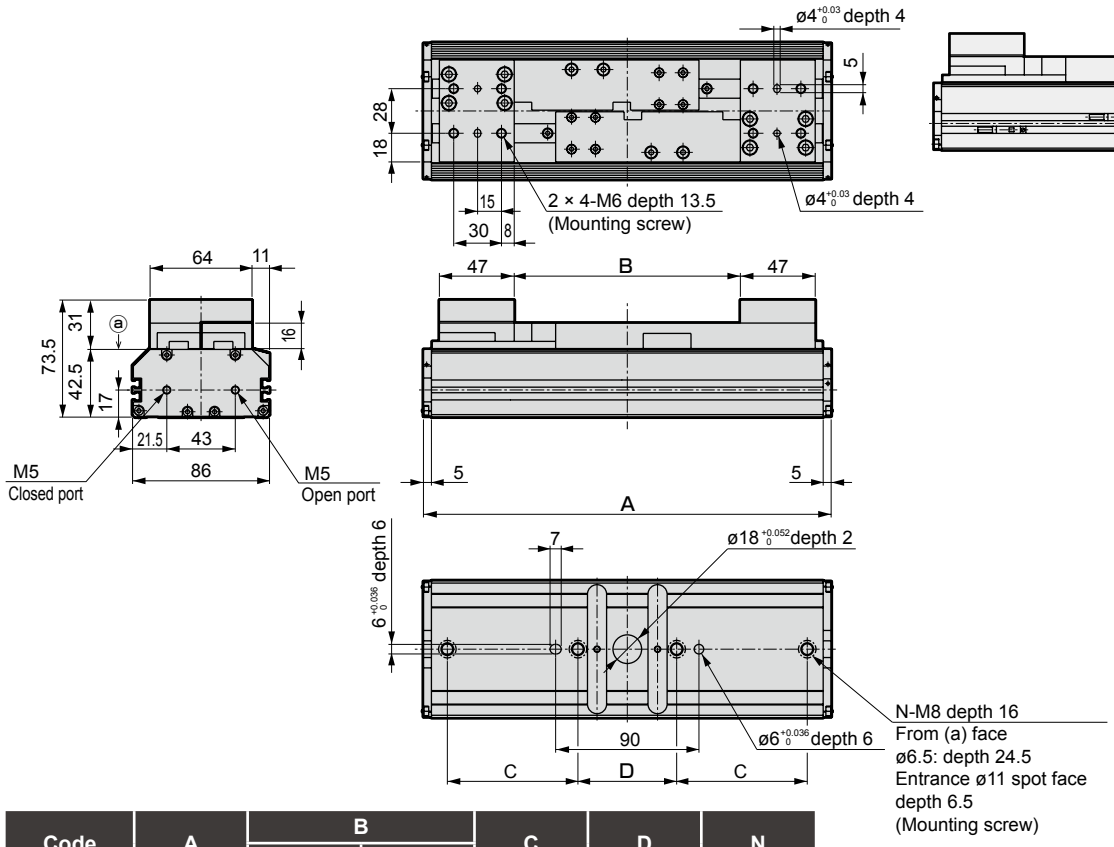

● With switch

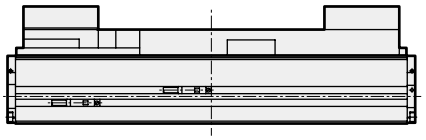

Code	A	B		C	D	N
		MAX	MIN			
Standard	174	72	2	0	144	2
L1	256	142	2	82	62	4

MEMO

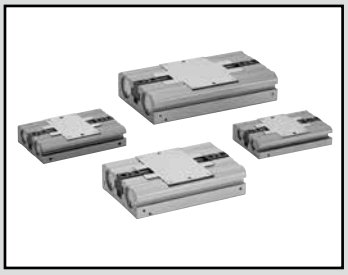

Ultra thin parallel hand

HLD Series

● Operational stroke length: ø12, 16, 20, 30 mm

RoHS CAD

Specifications

Item	HLD			
Size	08CS	12CS	16CS	20CS
Bore size mm	ø8×4	ø12×4	ø16×4	ø20×4
Working fluid	Compressed air			
Max. working pressure MPa	0.7 (≈100 psi, 7 bar)			
Min. working pressure MPa	0.2 (≈29 psi, 2 bar)			
Ambient temperature °C	5 (41°F) to 60 (140°F)			
Port size	M3		M5	
Operating stroke length mm	12	16	20	30
Volumetric capacity (reciprocating) cm^3	3.2	7.8	19.8	43.3
Repeatability mm	±0.01			
Weight kg	0.23	0.29	0.62	1.05
Lubrication	Not required (use turbine oil class 1 ISO VG32 if necessary for lubrication)			

Switch specifications

Item	Proximity 2-wire		Proximity 3-wire	
	T2H/T2V	T2WH/T2WV (2-color display)	T3H/T3V	T3WH/T3WV (2-color display)
Applications	Dedicated for programmable controller		For programmable controller, relay	
Output method	-		NPN output	
Power supply voltage	-		10 to 28 VDC	
Load voltage	10 to 30 VDC	24 VDC ±10%	30 VDC or less	
Load current	5 to 20 mA		100 mA or less	50 mA or less
Indicator lamp	LED (Lit when ON)	Red/green LED (Lit when ON)	LED (Lit when ON)	Red/green LED (Lit when ON)
Leakage current	1 mA or less		10 μA or less	
Weight	1 m:18 g 3 m:49 g 5 m:80 g		1 m:18 g 3 m:49 g 5 m:80 g	

*1 : The above max. load current is 20 mA at 25°C.
The current is lower than 20 mA if the operating ambient temperature around the switch is higher than 25˚C. (5 to 10 mA at 60˚C)

*2 : Refer to Ending Page 1 for detailed switch specifications and dimensions.

How to order

HLD - 08CS - T2H - R

Ⓐ Size

Ⓑ Switch model No.

Ⓒ Switch quantity

Code	Description
Ⓐ Size	
08CS	
12CS	
16CS	
20CS	

Ⓑ Switch model No.

Axial lead wire	Radial lead wire	Contact	Voltage AC	Voltage DC	Display	Lead wire
T2H*	**T2V***	Proximity		●	1-color display	2-wire
T3H*	**T3V***			●		3-wire
T2WH*	**T2WV***			●	2-color display	2-wire
T3WH*	**T3WV***			●		3-wire

* Lead wire length	
Blank	1 m (standard)
3	3 m (option)
5	5 m (option)

Ⓒ Switch quantity	
R	1 on open side
H	1 on closed side
D	2

[Example of model No.]

HLD-08CS-T2H-R

Ⓐ Size : 08CS
Ⓑ Switch model No. : Proximity T2H switch, lead wire 1 m
Ⓒ Switch quantity : 1 on open side

How to order switch

SW - T2H

Switch model No.
(Item Ⓑ above)

Specifications for rechargeable battery

(Catalog No. CC-1226A)

HLD - … - P4*

● Design compatible with rechargeable battery manufacturing process.

* Contact CKD for details.

LCM
LCR
LCG
LCW
LCX
STM
STG
STS/STL
STR2
UCA2
ULK*
JSK/M2
JSG
JSC3/JSC4
USSD
UFCD
USC
UB
JSB3
LMB
LML
HCM
HCA
LBC
CAC4
UCAC2
CAC-N
UCAC-N
RCS2
RCC2
PCC
SHC
MCP
GLC
MFC
BBS
RRC
GRC
RV3*
NHS
HRL
LN
Hand
Chuk
MecHnd/Chuk
ShkAbs
FJ
FK
SpdContr
Ending
LSH-HP
LSH
FH100
BSA2
BHA/BHG
LHA
LHAG
HAP
HKP
HCP
HGP
HLF2
HLA/HLB
HLAG/HLBG
HLC
HLD
HMF
HMF-G
HMFB
HFP
FH500
HBL
HJL
HMD
HDL
HJD
BHE

Internal structure and parts list

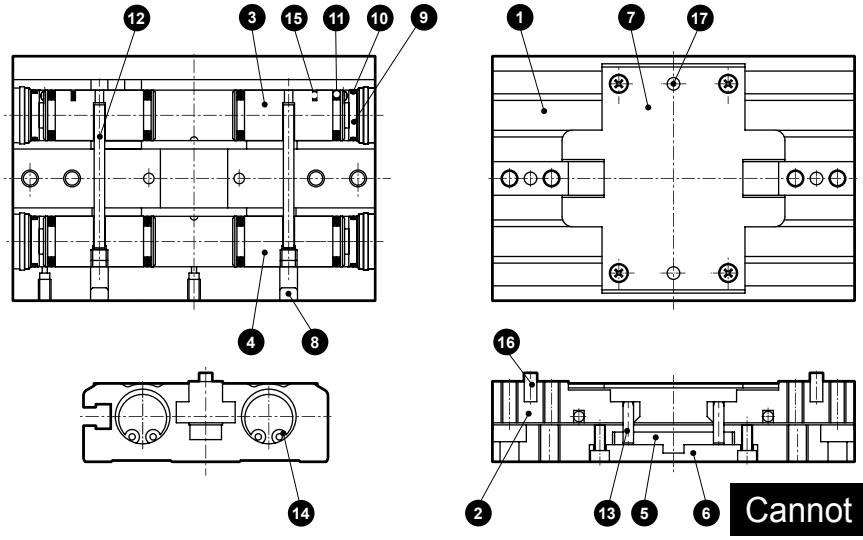

Parts list

Cannot be disassembled

No.	Part name	Material	No.	Part name	Material
1	Body	Aluminum alloy	10	Cylinder sealant	Nitrile rubber
2	Finger	Steel	11	Piston seal	Nitrile rubber
3	Piston 1	Aluminum alloy	12	Operation shaft A	Alloy steel
4	Piston 2	Aluminum alloy	13	Operation shaft B	Alloy steel
5	Cam	Steel	14	C type snap ring	Stainless steel
6	Guide block	Aluminum alloy	15	Magnet	
7	Top cover	Stainless steel	16	Positioning pin 1	Alloy steel
8	Cap	Aluminum alloy	17	Positioning pin 2	Alloy steel
9	Cylinder guard	Aluminum alloy			

Gripping power performance data

- Gripping power represents the thrust (per one finger) in the arrow direction shown in the figure.
- The gripping power with finger length L of hand and a supply pressure of 0.3, 0.5 and 0.7 MPa is shown.

● Both open direction (⇦) and closed direction (➡) - (shown with continuous line)

(Note) When making a selection, read the precautions for design and selection on page 1764.

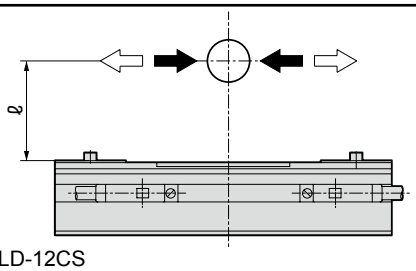

● HLD-08CS

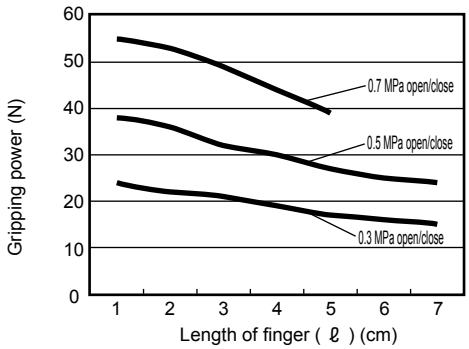

● HLD-12CS

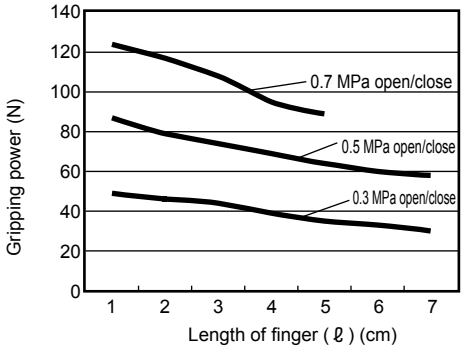

● HLD-16CS

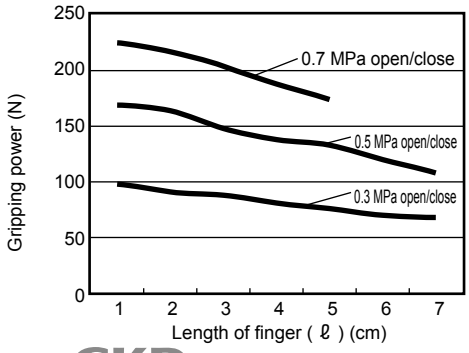

● HLD-20CS

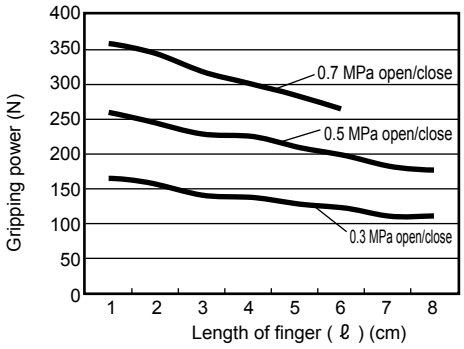

Dimensions

● HLD-08CS

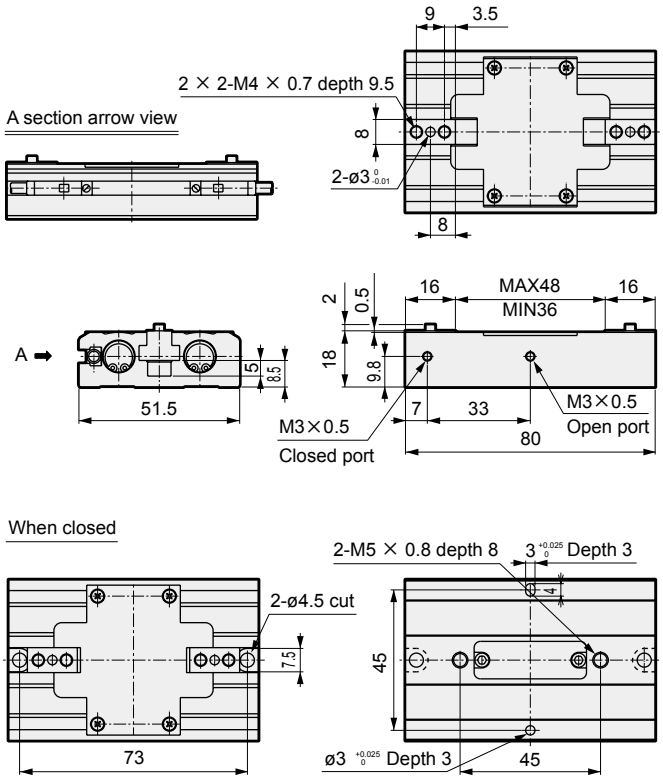

● HLD-12CS

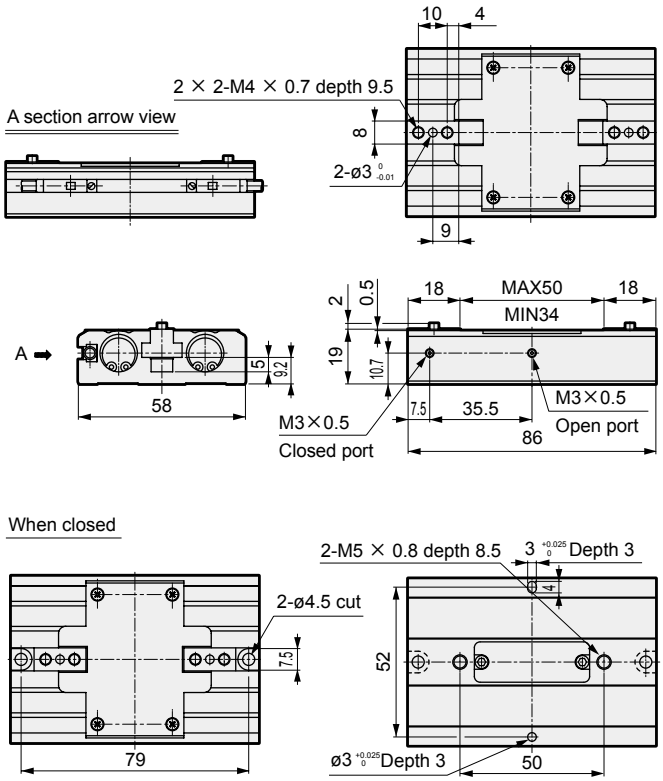

● HLD-16CS

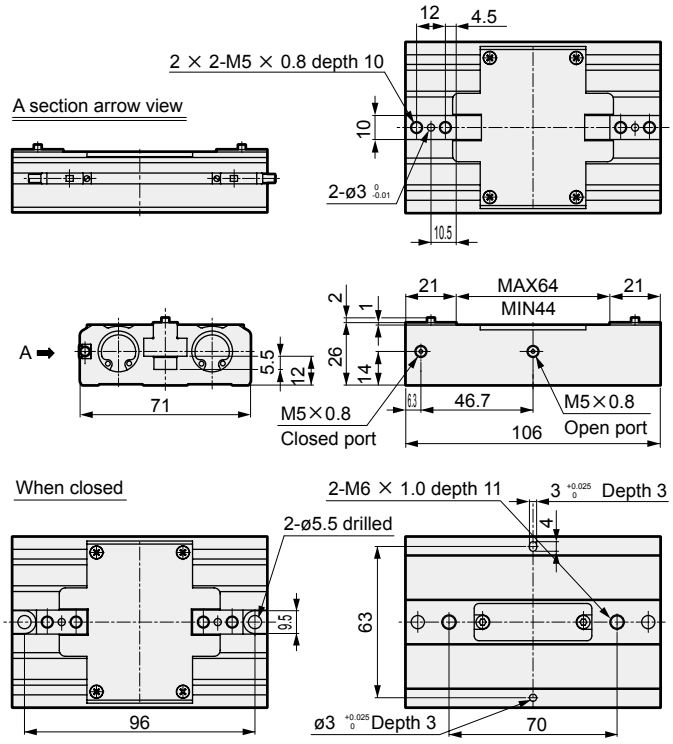

● HLD-20CS

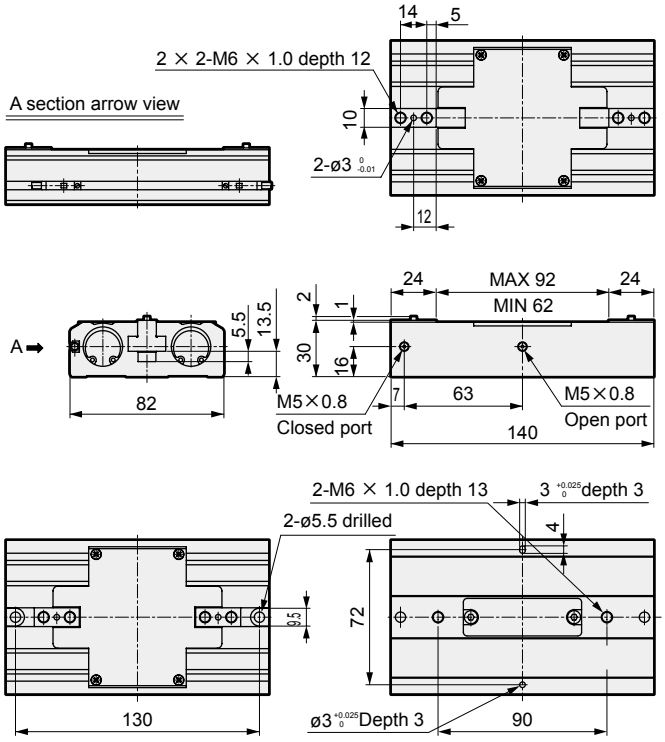

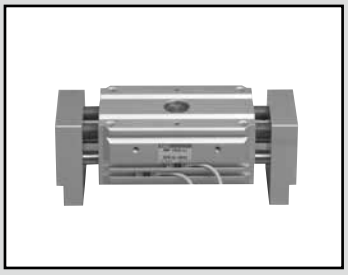

Compact wide parallel hand (standard/long stroke)

HMF Series

● Operational stroke length: Standard 30, 40, 50, 70, 100 mm
Long stroke 60, 80, 100, 120, 160, 200 mm

Double acting

RoHS CAD

Specifications

Item	HMF-12CS	HMF-16CS			HMF-20CS			HMF-25CS			HMF-32CS			HMF-40CS		
		Std.	L1	L2	Std.	L1	L2	Std.	L1	L2	Std.	L1	L2	Std.	L1	L2
Bore size mm	ø12×2	ø16×2			ø20×2			ø25×2			ø32×2			ø40×2		
Working fluid	Compressed air															
Max. working pressure MPa	0.7 (≈100 psi, 7 bar)															
Min. working pressure MPa	0.3 (≈44 psi, 3 bar)															
Ambient temperature °C	5 (41°F) to 60 (140°F)															
Port size	M5										Rc1/8					
Operating stroke length mm	20	30	60	80	40	80	100	50	100	120	70	120	160	100	160	200
Rod diameter mm	ø6	ø8			ø10			ø12			ø16			ø20		
Volumetric capacity (reciprocating) cm^3	3.4	9.1	18.1	24.1	18.8	37.6	47.0	37.7	75.4	90.5	84.4	145	193	226	301	377
Repeatability mm	±0.1															
Weight kg	0.31	0.54	0.95	1.12	0.90	1.58	1.77	1.7	2.16	2.3	2.8	3.8	4.8	5.7	7.8	8.8
Lubrication	Not required (use turbine oil class 1 ISO VG32 if necessary for lubrication)															

Switch specifications

Item	Proximity 2-wire	Proximity 3-wire
	T2H/V	T3H/V
Applications	Dedicated for programmable controller	For programmable controller, relay
Output method	—	NPN output
Power supply voltage	—	10 to 28 VDC
Load voltage/current	10 to 30 VDC, 5 to 20 mA (*1)	30 VDC or less, 100 mA or less
Indicator lamp	LED (Lit when ON)	
Leakage current	1 mA or less	10 μA or less
Weight	1 m:18 g 3 m:49 g 5 m:80 g	

*1 : The above max. load current is 20 mA at 25°C.
The current is lower than 20 mA if the operating ambient temperature around the switch is higher than 25˚C. (5 to 10 mA at 60˚C)
*2 : Refer to Ending Page 1 for detailed switch specifications and dimensions.

How to order

Without switch (built-in magnet for switch)

HMF - 32CS - L1

With switch (built-in magnet for switch)

HMF - 32CS - L1 - T2H - R

Ⓐ Size

Ⓑ Option *1

Ⓒ Switch model No.

Ⓓ Switch quantity

Code	Description
Ⓐ Size	
12CS	
16CS	
20CS	
25CS	
32CS	
40CS	
Ⓑ Option	
Blank	Standard
L1	Long stroke 1
L2	Long stroke 2

Ⓒ Switch model No.

Axial lead wire	Radial lead wire	Contact	Voltage AC	Voltage DC	Display	Lead wire
T2H*	T2V*	Proximity		●	1-color display	2-wire
T3H*	T3V*			●		3-wire

* Lead wire length	
Blank	1 m (standard)
3	3 m (option)
5	5 m (option)

Ⓓ Switch quantity	
R	1 on open side
H	1 on closed side
D	2

⚠ Precautions for model No. selection

*1: 12CS is not available for long stroke "L1", "L2".

[Example of model No.]

HMF-32CS-L1-T2H-R

Ⓐ Size : 32CS
Ⓑ Option : Long stroke 1
Ⓒ Switch model No. : Proximity T2H switch, lead wire 1 m
Ⓓ Switch quantity : 1 on open side

How to order switch

SW - T2H

Switch model No.
(Item Ⓒabove)

Specifications for rechargeable battery

(Catalog No. CC-1226A)

HMF - … - P4*

● Design compatible with rechargeable battery manufacturing process.

* Contact CKD for details.

LCM
LCR
LCG
LCW
LCX
STM
STG
STS/STL
STR2
UCA2
ULK*
JSK/M2
JSG
JSC3/JSC4
USSD
UFCD
USC
UB
JSB3
LMB
LML
HCM
HCA
LBC
CAC4
UCAC2
CAC-N
UCAC-N
RCS2
RCC2
PCC
SHC
MCP
GLC
MFC
BBS
RRC
GRC
RV3*
NHS
HRL
LN
Hand
Chuk
MecHnd/Chuk
ShkAbs
FJ
FK
SpdContr
Ending
LSH-HP
LSH
FH100
BSA2
BHA/BHG
LHA
LHAG
HAP
HKP
HCP
HGP
HLF2
HLA/HLB
HLAG/HLBG
HLC
HLD
HMF
HMF-G
HMFB
HFP
FH500
HBL
HJL
HMD
HDL
HJD
BHE

Internal structure and parts list

● HMF-12CS to 25CS (Standard stroke length)

● HMF-32CS, 40CS (Standard)
● HMF-16CS to 40CS-L1, L2 (Long stroke)

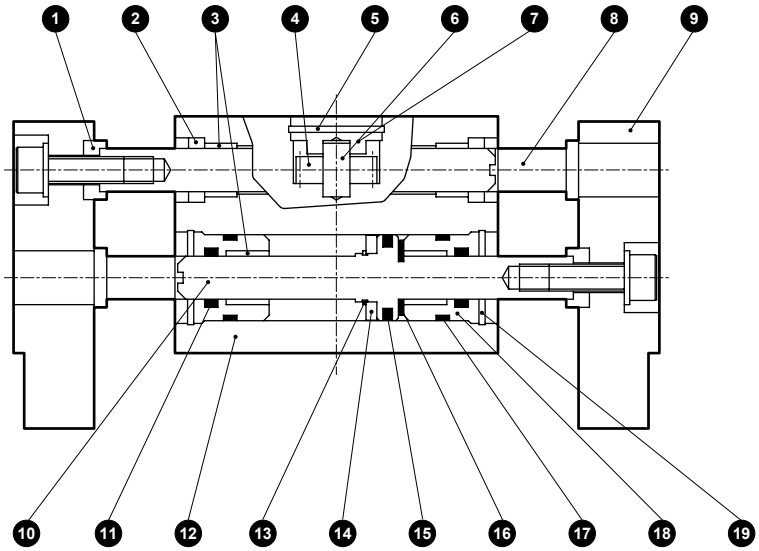

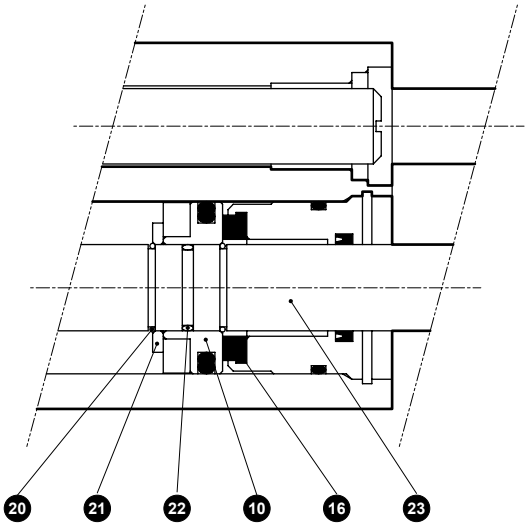

Cannot be disassembled

No.	Part name	Material	Remarks	No.	Part name	Material	Remarks
1	Washer	Carbon steel	12CS and 16CS only	13	Snap ring	Stainless steel	
2	Needle bearing sealant	Resin + steel		14	Magnet		
3	Bush	Sintering oil impregnated alloy		15	Piston packing	Nitrile rubber	
4	Pinion gear	Carbon steel		16	Cushion	Urethane rubber	
5	Snap ring	Stainless steel		17	Cylinder gasket	Nitrile rubber	
6	Pinion gear shaft	Stainless steel		18	Cylinder guard	Aluminum alloy	
7	Pinion cover	Stainless steel		19	Snap ring	Stainless steel	
8	Guide rod	Stainless steel		20	Piston fixing spring	Stainless steel	
9	Finger	Aluminum alloy		21	Magnet holder	Stainless steel	
10	Piston	Stainless steel		22	O-ring	Nitrile rubber	
11	Rod packing	Nitrile rubber		23	Piston rod	Stainless steel	
12	Body	Aluminum alloy					

Gripping power performance data

- Gripping power represents the thrust (per one finger) in the arrow direction shown in the figure.
- The gripping power with finger length L of hand and a supply pressure of 0.3, 0.5 and 0.7 MPa is shown.
  - ● Both open direction (⇦) closed direction (➡)
    ——— (shown with continuous line)

(Note) When making a selection, read the precautions for design and selection on page 1764.

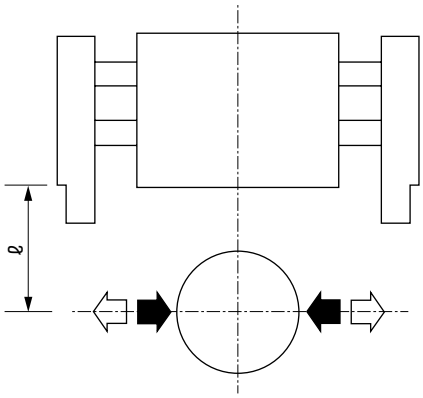

● HMF-12CS

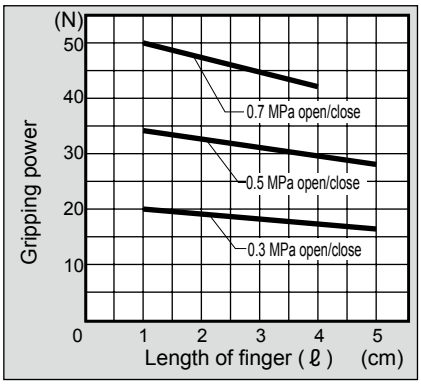

● HMF-16CS

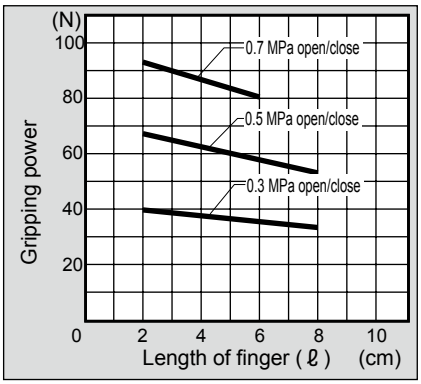

● HMF-20CS

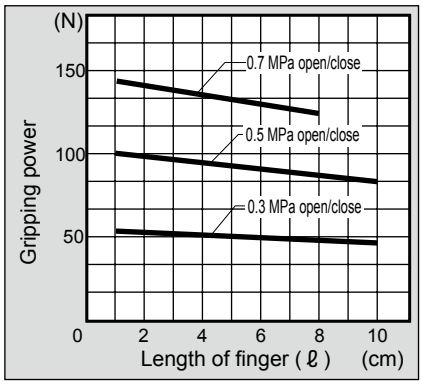

● HMF-25CS

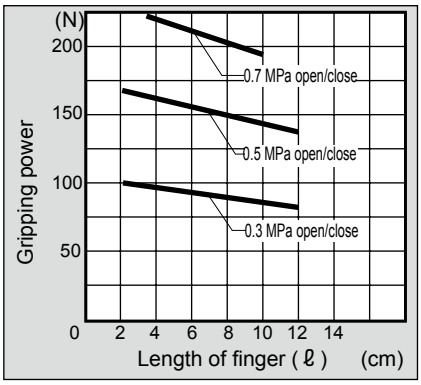

● HMF-32CS

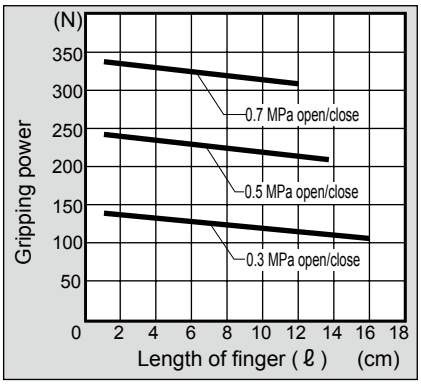

● HMF-40CS

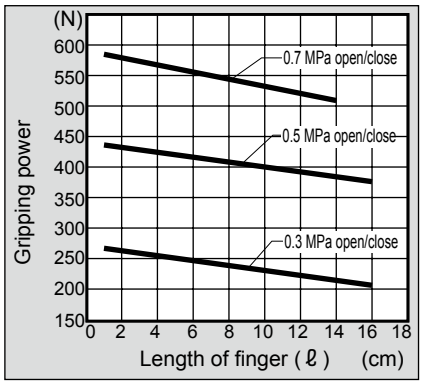

LCM
LCR
LCG
LCW
LCX
STM
STG
STS/STL
STR2
UCA2
ULK*
JSK/M2
JSG
JSC3/JSC4
USSD
UFCD
USC
UB
JSB3
LMB
LML
HCM
HCA
LBC
CAC4
UCAC2
CAC-N
UCAC-N
RCS2
RCC2
PCC
SHC
MCP
GLC
MFC
BBS
RRC
GRC
RV3*
NHS
HRL
LN
Hand
Chuk
MecHnd/Chuk
ShkAbs
FJ
FK
SpdContr
Ending
LSH-HP
LSH
FH100
BSA2
BHA/BHG
LHA
LHAG
HAP
HKP
HCP
HGP
HLF2
HLA/HLB
HLAG/HLBG
HLC
HLD
HMF
HMF-G
HMFB
HFP
FH500
HBL
HJL
HMD
HDL
HJD
BHE

Dimensions

● HMF-12CS Standard

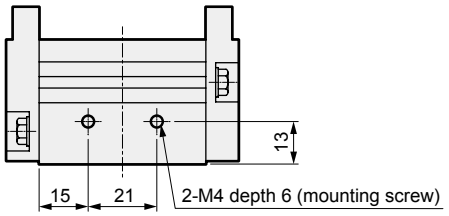

● With switch

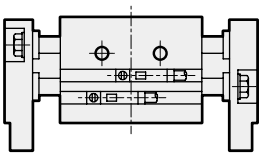

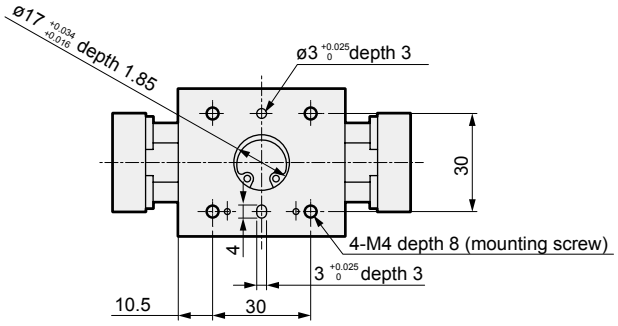

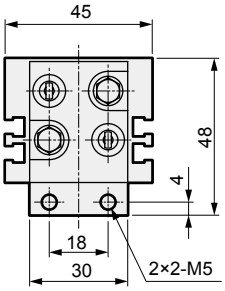

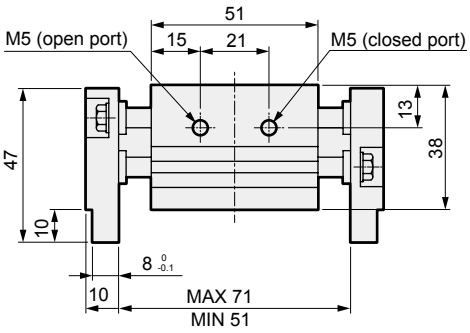

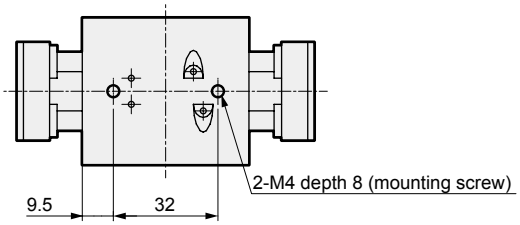

Dimensions

● HMF-16CS Standard/L1/L2

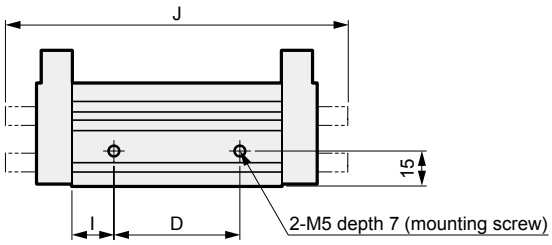

● With switch

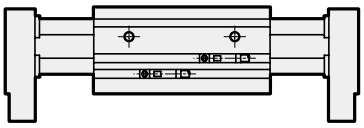

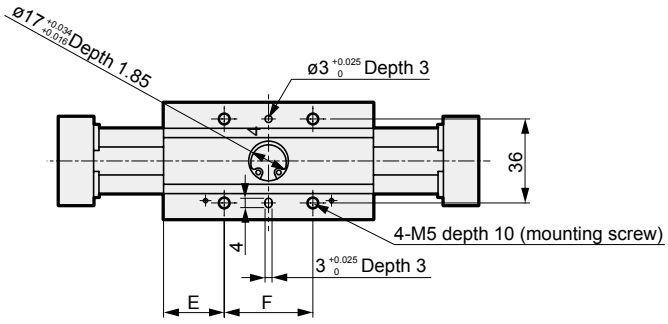

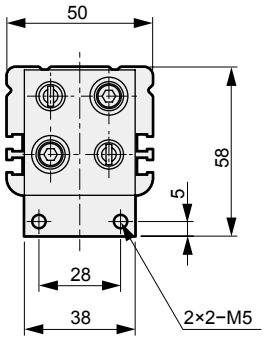

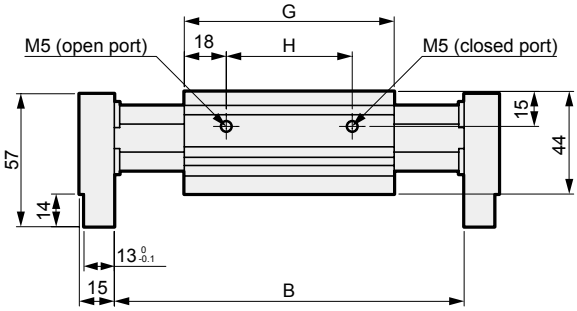

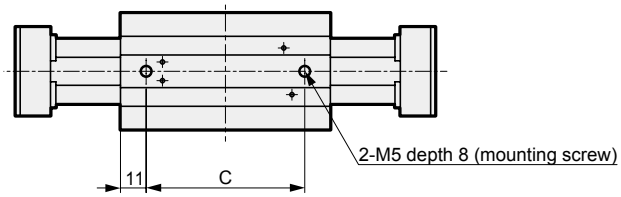

Code	B		C	D	E	F	G	H	I	J
	MAX	MIN								
Standard (blank)	90	60	38	28	11	38	60	24	16	-
L1	150	90	68	54	26	38	90	54	18	147
L2	186	106	84	70	26	54	106	70	18	183

LCM
LCR
LCG
LCW
LCX
STM
STG
STS/STL
STR2
UCA2
ULK*
JSK/M2
JSG
JSC3/JSC4
USSD
UFCD
USC
UB
JSB3
LMB
LML
HCM
HCA
LBC
CAC4
UCAC2
CAC-N
UCAC-N
RCS2
RCC2
PCC
SHC
MCP
GLC
MFC
BBS
RRC
GRC
RV3*
NHS
HRL
LN
Hand
Chuk
MecHnd/Chuk
ShkAbs
FJ
FK
SpdContr
Ending
LSH-HP
LSH
FH100
BSA2
BHA/BHG
LHA
LHAG
HAP
HKP
HCP
HGP
HLF2
HLA/HLB
HLAG/HLBG
HLC
HLD
HMF
HMF-G
HMFB
HFP
FH500
HBL
HJL
HMD
HDL
HJD
BHE

Dimensions

● HMF-20CS Standard/L1/L2

● With switch

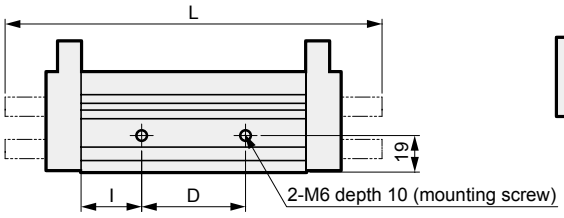

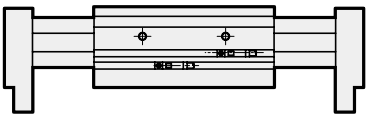

(Closed state)

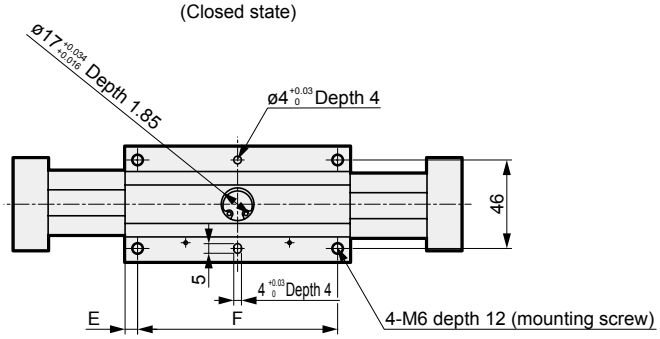

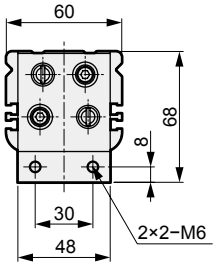

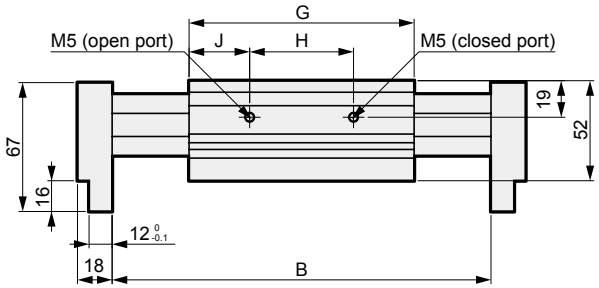

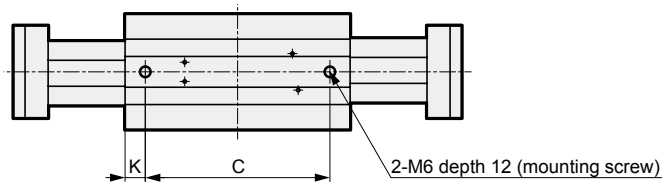

Code	B		C	D	E	F	G	H	I	J	K	L
	MAX	MIN										
Standard (blank)	114	74	56	38	9	56	74	34	18	20	9	-
L1	197	117	96	54	6.5	104	117	54	31.5	31.5	10.5	196
L2	233	133	112	70	6.5	120	133	70	31.5	31.5	10.5	232

Dimensions

● HMF-25CS Standard/L1/L2

● With switch

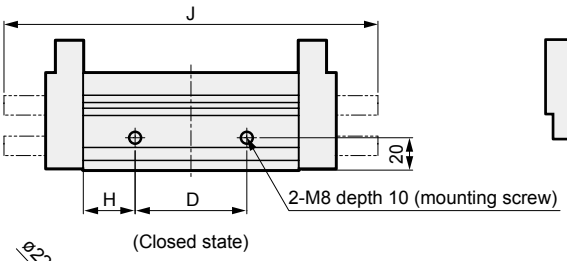

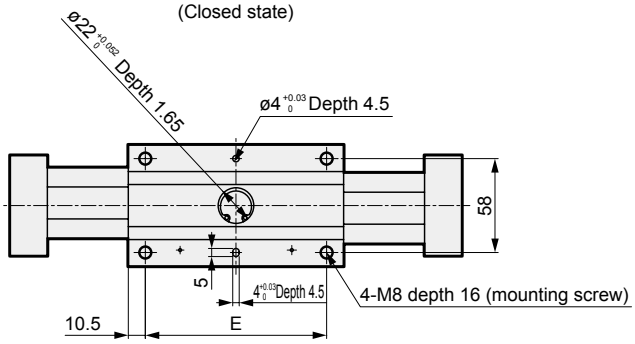

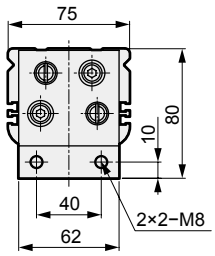

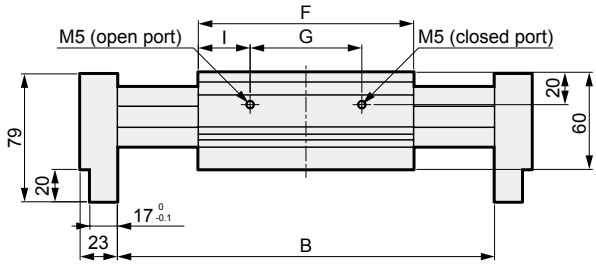

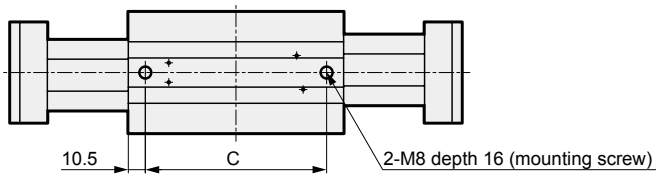

Code	B		C	D	E	F	G	H	I	J
	MAX	MIN								
Standard (blank)	141	91	70	48	70	91	41	21.5	25	-
L1	233	133	112	69	112	133	69	32	32	231
L2	271	151	130	87	130	151	87	32	32	269

LCM
LCR
LCG
LCW
LCX
STM
STG
STS/STL
STR2
UCA2
ULK*
JSK/M2
JSG
JSC3/JSC4
USSD
UFCD
USC
UB
JSB3
LMB
LML
HCM
HCA
LBC
CAC4
UCAC2
CAC-N
UCAC-N
RCS2
RCC2
PCC
SHC
MCP
GLC
MFC
BBS
RRC
GRC
RV3*
NHS
HRL
LN
Hand
Chuk
MecHnd/Chuk
ShkAbs
FJ
FK
SpdContr
Ending
LSH-HP
LSH
FH100
BSA2
BHA/BHG
LHA
LHAG
HAP
HKP
HCP
HGP
HLF2
HLA/HLB
HLAG/HLBG
HLC
HLD
HMF
HMF-G
HMFB
HFP
FH500
HBL
HJL
HMD
HDL
HJD
BHE

Dimensions CAD

● HMF-32CS Standard/L1/L2

● With switch

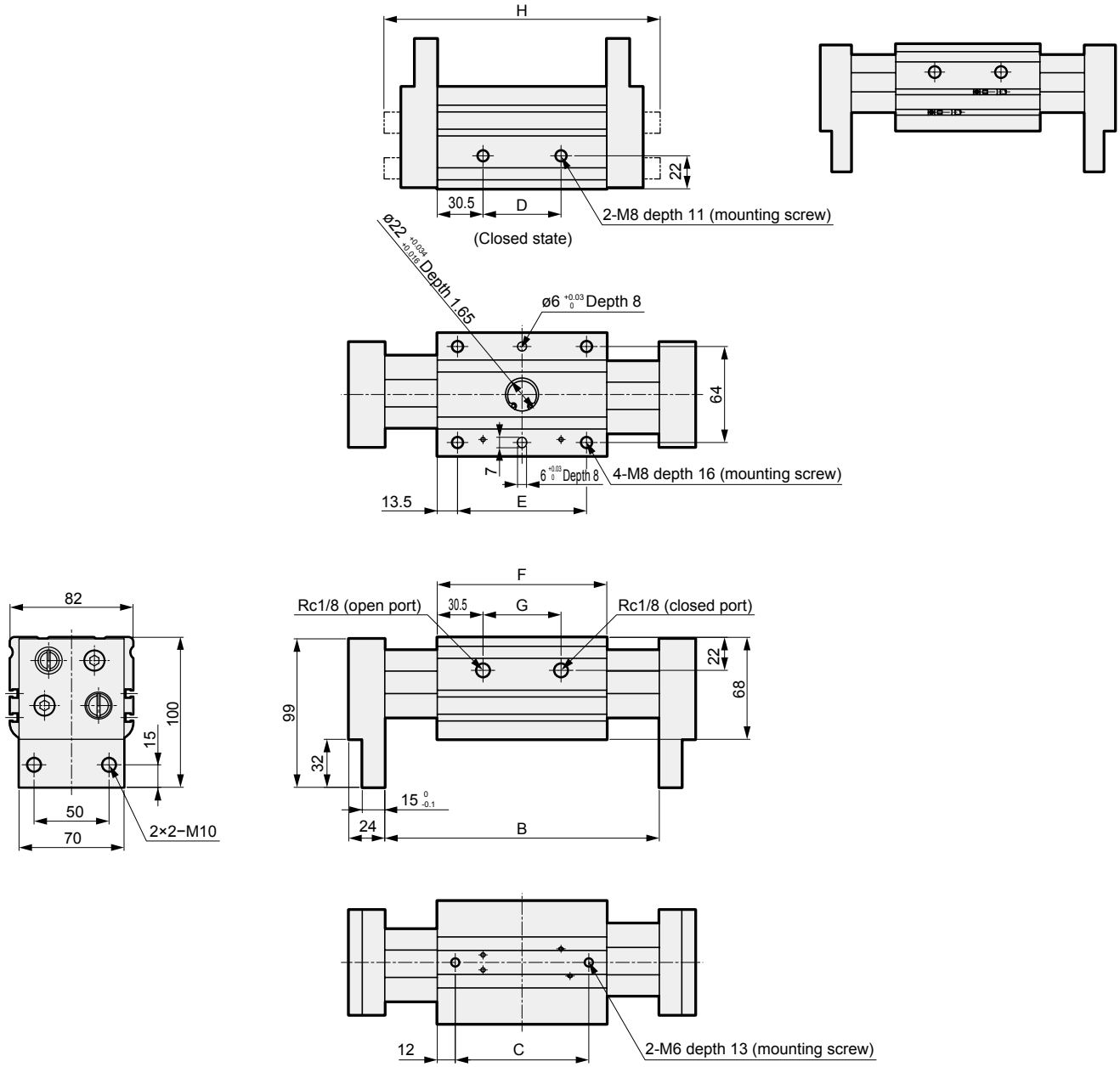

Code	B		C	D	E	F	G	H
	MAX	MIN						
Standard (blank)	183	113	89	52	86	113	52	179
L1	274	154	130	93	127	154	93	270
L2	354	194	170	133	167	194	133	350

Dimensions

● HMF-40CS Standard/L1/L2

● With switch

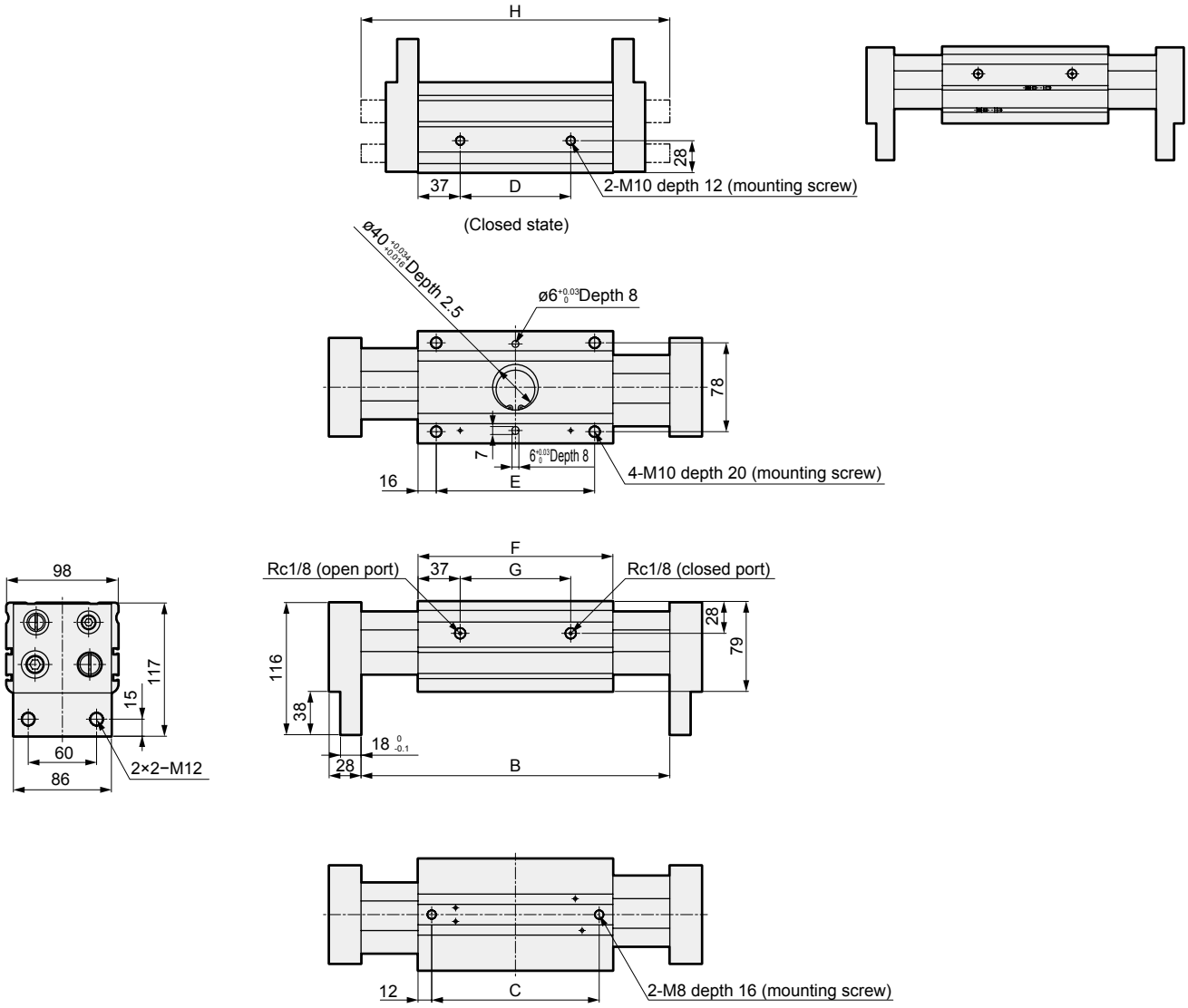

Code	B		C	D	E	F	G	H
	MAX	MIN						
Standard (blank)	271	171	147	97	139	171	97	271
L1	361	201	177	127	169	201	127	361
L2	434	234	210	160	202	234	160	434

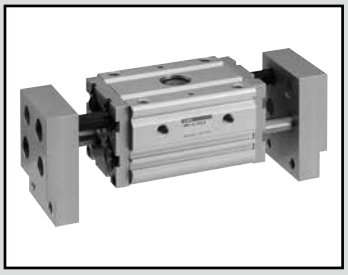

Compact wide parallel hand (standard/long stroke) Coolant proof specifications

HMF-G Series

● Operating stroke length: Standard 30, 40, 50 mm
Long stroke 60, 80, 100, 120 mm

Double acting

RoHS CAD

Specifications

1 MPa ≈ 145.0 psi, 1 MPa = 10 bar

Item	HMF-G-16CS			HMF-G-20CS			HMF-G-25CS		
	Standard	L1	L2	Standard	L1	L2	Standard	L1	L2
Bore size mm	ø16 x 2			ø20 x 2			ø25 x 2		
Working fluid	Compressed air								
Max. working pressure MPa	0.7 (≈101 psi, 7 bar)								
Min. working pressure MPa	0.3 (≈44 psi, 3 bar)								
Ambient temperature °C	5 (41°F) to 60 (140°F)								
Port size	M5								
Operating stroke length mm	30	60	80	40	80	100	50	100	120
Rod diameter mm	ø8			ø10			ø12		
Volumetric capacity (reciprocating) cm^3	9.1	18.1	24.1	18.8	37.6	47.0	37.7	75.4	90.5
Repeatability mm	±0.1								
Weight kg	0.65	1.06	1.23	1.07	1.75	1.94	2	2.46	2.6
Lubrication	Not required (use turbine oil class 1 ISO VG32 if necessary for lubrication)								

Switch specifications

Item	Wireless 2-wire	Wireless 3-wire
	T2YLH, T2YLV	T3YLH, T3YLV
Applications	Dedicated for programmable controller	Programmable controller, relay
Output method	–	NPN output
Power supply voltage	–	10 to 28 VDC
Load voltage/current	10 to 30 VDC, 5 to 20 mA *1	30 VDC or less, 50 mA or less
Display lamp	Red/green LED (Lit when ON)	
Leakage current	1 mA or less	10 μA or less
Impact resistance	980 m/S^2	
Weight g	1 m: 33 3 m: 87 5 m: 142	

*1: The above max. load current is 20 mA at 25°C. The current is lower than 20 mA if the operating ambient temperature around the switch is higher than 25˚C. (5 to 10 mA at 60˚C)

*2: Refer to Ending Page 1 for other switch specifications.

How to order

Without switch (built-in magnet for switch)

HMF-G - 20CS - L1

With switch (built-in magnet for switch)

HMF-G - 20CS - L1 - T2YLH - R

Ⓐ Size

Ⓑ Option

Ⓒ Switch model No.

Ⓓ Switch quantity

Code	Description
Ⓐ Size	
16CS	
20CS	
25CS	
Ⓑ Option	
Blank	Standard
L1	Long stroke 1
L2	Long stroke 2

Ⓒ Switch model No.

Lead wire Straight	Lead wire Radial	Contact	Voltage AC	Voltage DC	Display	Lead wire
T2YLH*	T2YLV*	Proximity		●	2-color display	2-wire
T3YLH*	T3YLV*			●		3-wire

* Lead wire length	
Blank	1 m (standard)
3	3 m (option)
5	5 m (option)

Ⓓ Switch quantity	
R	1 on open side
H	1 on closed side
D	2

[Example of model No.]

HMF-G-20CS-L1-T2YLH-R

Ⓐ Size : 20CS
Ⓑ Option : Long stroke 1
Ⓒ Switch model No. : Proximity T2YLH switch, lead wire 1 m
Ⓓ Switch quantity : 1 on open side

How to order switch

SW - T2YLH

Switch model No.
(Item Ⓒ above)

LCM
LCR
LCG
LCW
LCX
STM
STG
STS/STL
STR2
UCA2
ULK*
JSK/M2
JSG
JSC3/JSC4
USSD
UFCD
USC
UB
JSB3
LMB
LML
HCM
HCA
LBC
CAC4
UCAC2
CAC-N
UCAC-N
RCS2
RCC2
PCC
SHC
MCP
GLC
MFC
BBS
RRC
GRC
RV3*
NHS
HRL
LN
Hand
Chuk
MecHnd/Chuk
ShkAbs
FJ
FK
SpdContr
Ending
LSH-HP
LSH
FH100
BSA2
BHA/BHG
LHA
LHAG
HAP
HKP
HCP
HGP
HLF2
HLA/HLB
HLAG/HLBG
HLC
HLD
HMF
HMF-G
HMFB
HFP
FH500
HBL
HJL
HMD
HDL
HJD
BHE

Internal structure and parts list

● HMF-G-16CS to 25CS

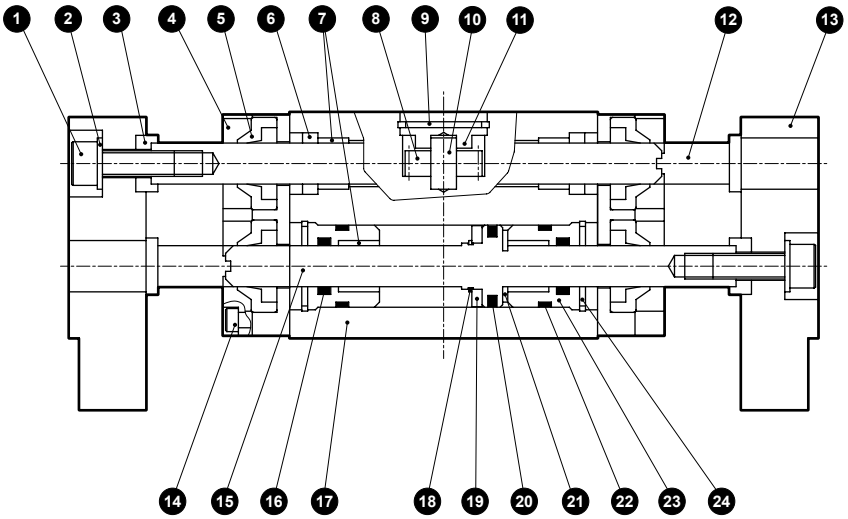

HMF-G (standard stroke length)

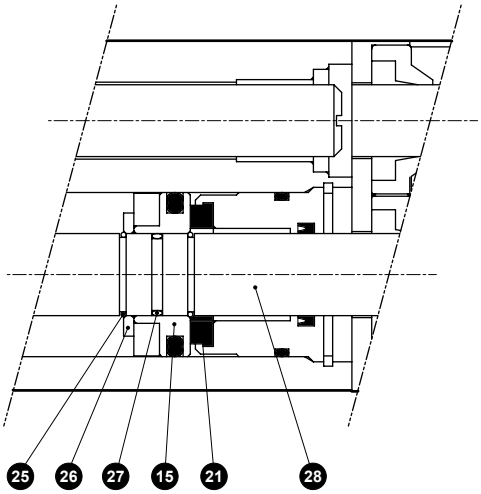

HMF-G (L1, L2)

Cannot be disassembled

No.	Part name	Material	Remarks	No.	Part name	Material	Remarks
1	Hexagon socket head cap screw	Steel alloy		15	Piston	Stainless steel	
2	Flat washer	Steel		16	Rod packing	Nitrile rubber	
3	Washer	Steel	16CS only	17	Body	Aluminum alloy	
4	Side cover	Aluminum alloy		18	Snap ring	Stainless steel	
5	Dust wiper	Nitrile rubber, steel		19	Magnet		
6	Needle bearing sealant	Resin, steel		20	Piston packing	Nitrile rubber	
7	Bush	Sintering oil impregnated alloy		21	Cushion	Urethane rubber	
8	Pinion gear	Steel		22	Cylinder gasket	Nitrile rubber	
9	Snap ring	Stainless steel		23	Cylinder guard	Aluminum alloy	
10	Pinion gear shaft	Stainless steel		24	Snap ring	Stainless steel	
11	Pinion cover	Stainless steel		25	Piston fixing spring	Stainless steel	
12	Guide rod	Stainless steel		26	Magnet holder	Stainless steel	
13	Finger	Aluminum alloy		27	O-ring	Nitrile rubber	
14	Hexagon socket head cap screw	Steel alloy		28	Piston rod	Stainless steel	

Gripping power performance data

- Gripping power represents the thrust (per one finger) in the arrow direction shown in the figure.
- The gripping power with finger length L of the hand and supply pressure of 0.3, 0.5 and 0.7 MPa is shown.
  - ● Common to open direction (⇦) and closed direction (➡) ——— (shown with continuous line)

(Note) For selection, see page 1764 for design and selection precautions.

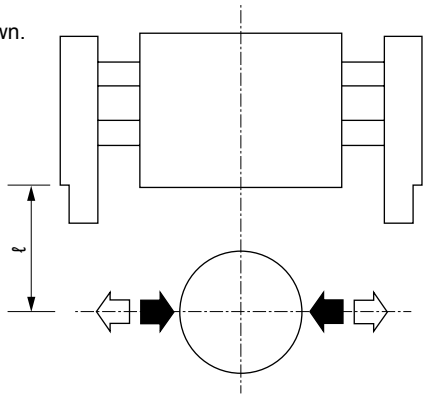

● HMF-G-16CS

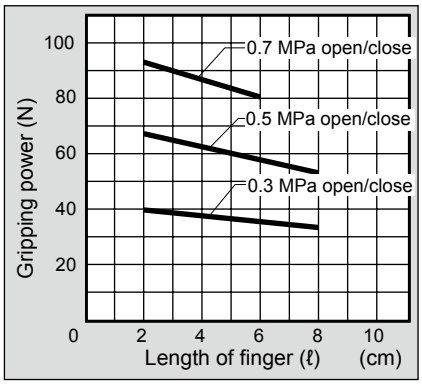

● HMF-G-20CS

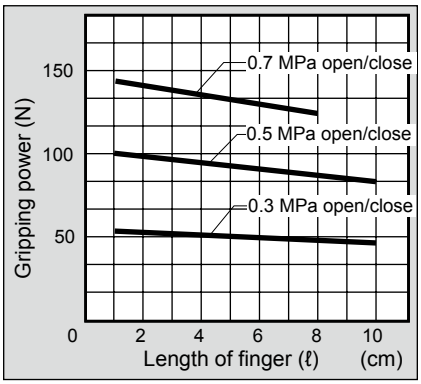

● HMF-G-25CS

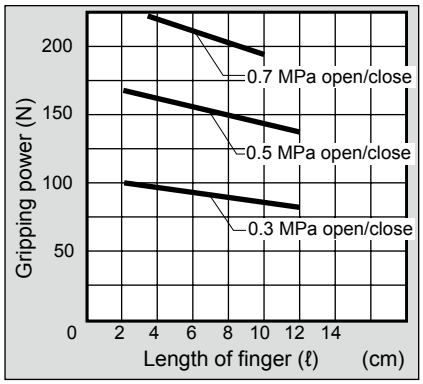

LCM
LCR
LCG
LCW
LCX
STM
STG
STS/STL
STR2
UCA2
ULK*
JSK/M2
JSG
JSC3/JSC4
USSD
UFCD
USC
UB
JSB3
LMB
LML
HCM
HCA
LBC
CAC4
UCAC2
CAC-N
UCAC-N
RCS2
RCC2
PCC
SHC
MCP
GLC
MFC
BBS
RRC
GRC
RV3*
NHS
HRL
LN
Hand
Chuk
MecHnd/Chuk
ShkAbs
FJ
FK
SpdContr
Ending
LSH-HP
LSH
FH100
BSA2
BHA/BHG
LHA
LHAG
HAP
HKP
HCP
HGP
HLF2
HLA/HLB
HLAG/HLBG
HLC
HLD
HMF
HMF-G
HMFB
HFP
FH500
HBL
HJL
HMD
HDL
HJD
BHE

Dimensions CAD

● HMF-G-16CS Standard/L1/L2

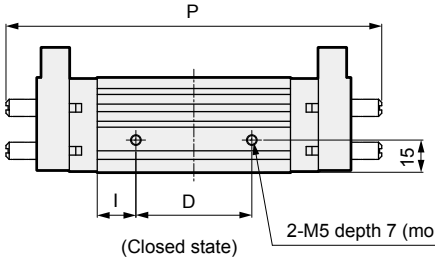

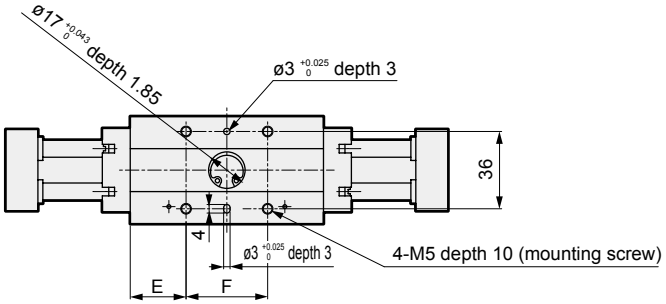

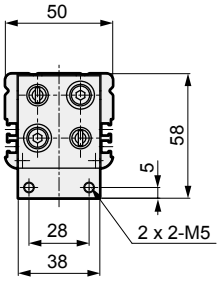

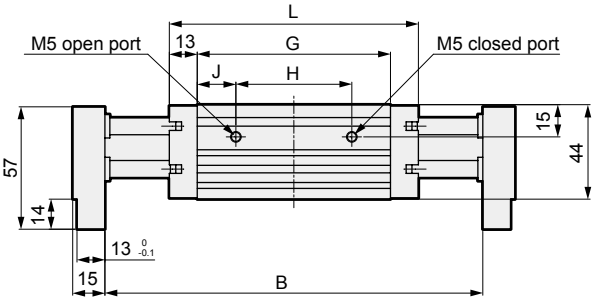

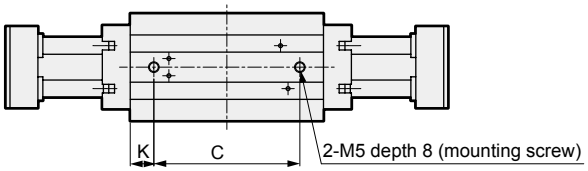

● With switch

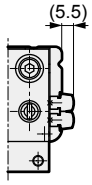

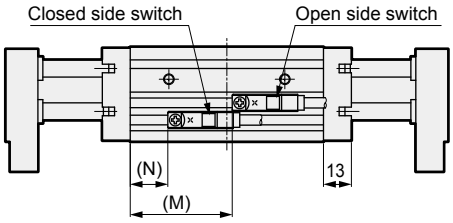

Code	B		C	D	E	F	G	H	I	J	K	L	M	N	P
	MAX	MIN													
Standard (blank)	116	86	38	28	11	38	60	24	16	18	11	86	26	11	115
L1	176	116	68	54	26	38	90	54	18	18	11	116	48.5	18.5	175
L2	212	132	84	70	26	54	106	70	18	18	11	132	64.5	24.5	211

Dimensions

● HMF-G-20CS Standard/L1/L2

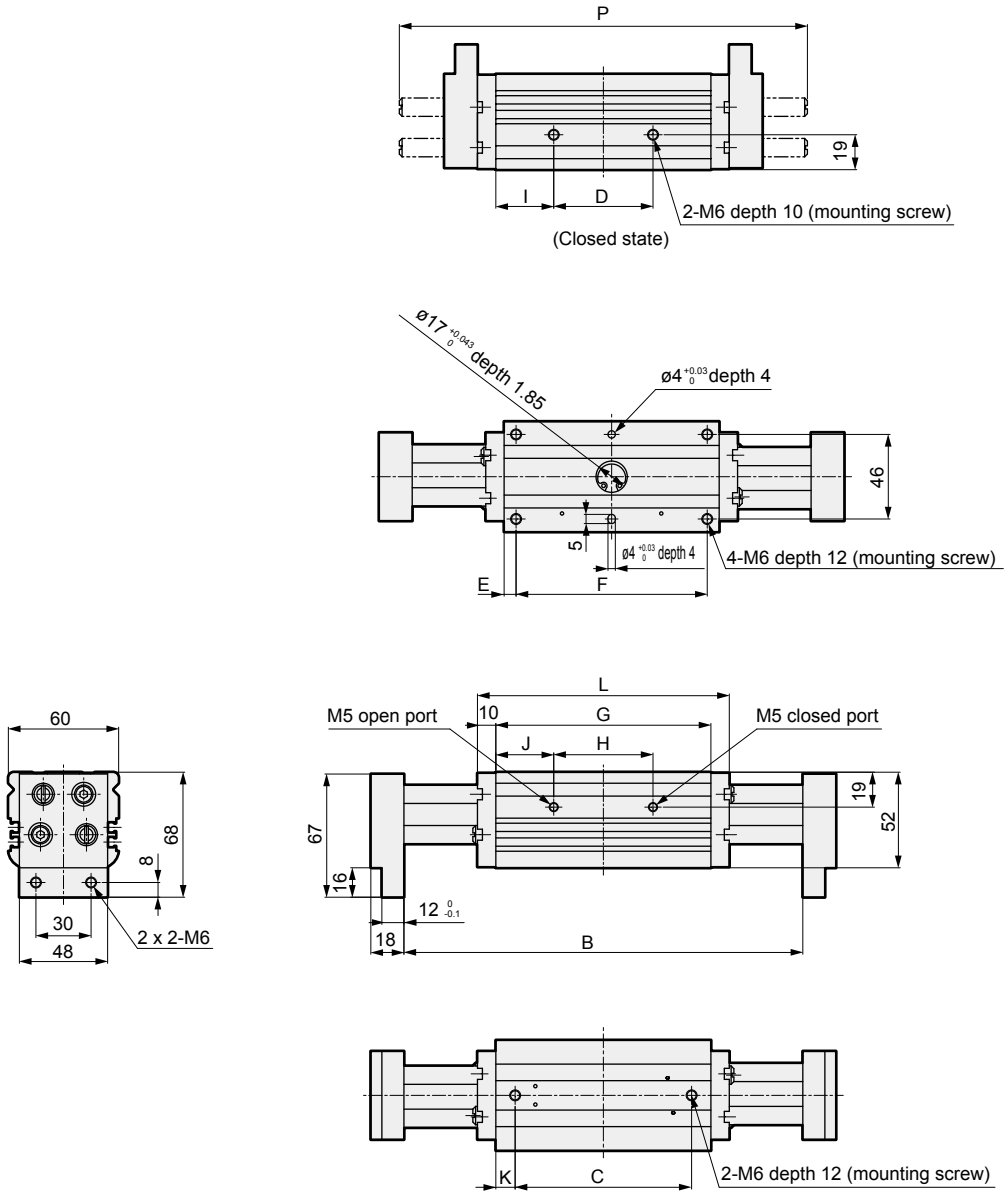

● With switch

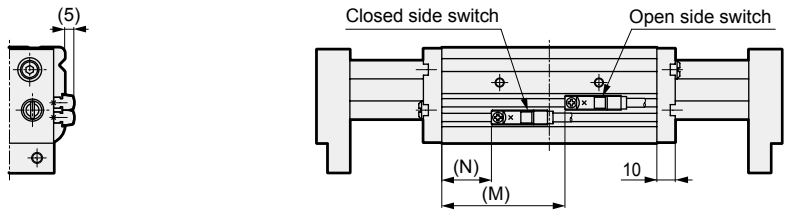

Code	B		C	D	E	F	G	H	I	J	K	L	M	N	P
	MAX	MIN													
Standard (blank)	134	94	56	38	9	56	74	34	18	20	9	94	35.5	15.5	139
L1	217	137	96	54	6.5	104	117	54	31.5	31.5	10.5	137	67	27	222
L2	253	153	112	70	6.5	120	133	70	31.5	31.5	10.5	153	83	33	258

LCM
LCR
LCG
LCW
LCX
STM
STG
STS/STL
STR2
UCA2
ULK*
JSK/M2
JSG
JSC3/JSC4
USSD
UFCD
USC
UB
JSB3
LMB
LML
HCM
HCA
LBC
CAC4
UCAC2
CAC-N
UCAC-N
RCS2
RCC2
PCC
SHC
MCP
GLC
MFC
BBS
RRC
GRC
RV3*
NHS
HRL
LN
Hand
Chuk
MecHnd/Chuk
ShkAbs
FJ
FK
SpdContr
Ending
LSH-HP
LSH
FH100
BSA2
BHA/BHG
LHA
LHAG
HAP
HKP
HCP
HGP
HLF2
HLA/HLB
HLAG/HLBG
HLC
HLD
HMF
HMF-G
HMFB
HFP
FH500
HBL
HJL
HMD
HDL
HJD
BHE

Dimensions CAD

● HMF-G-25CS Standard/L1/L2

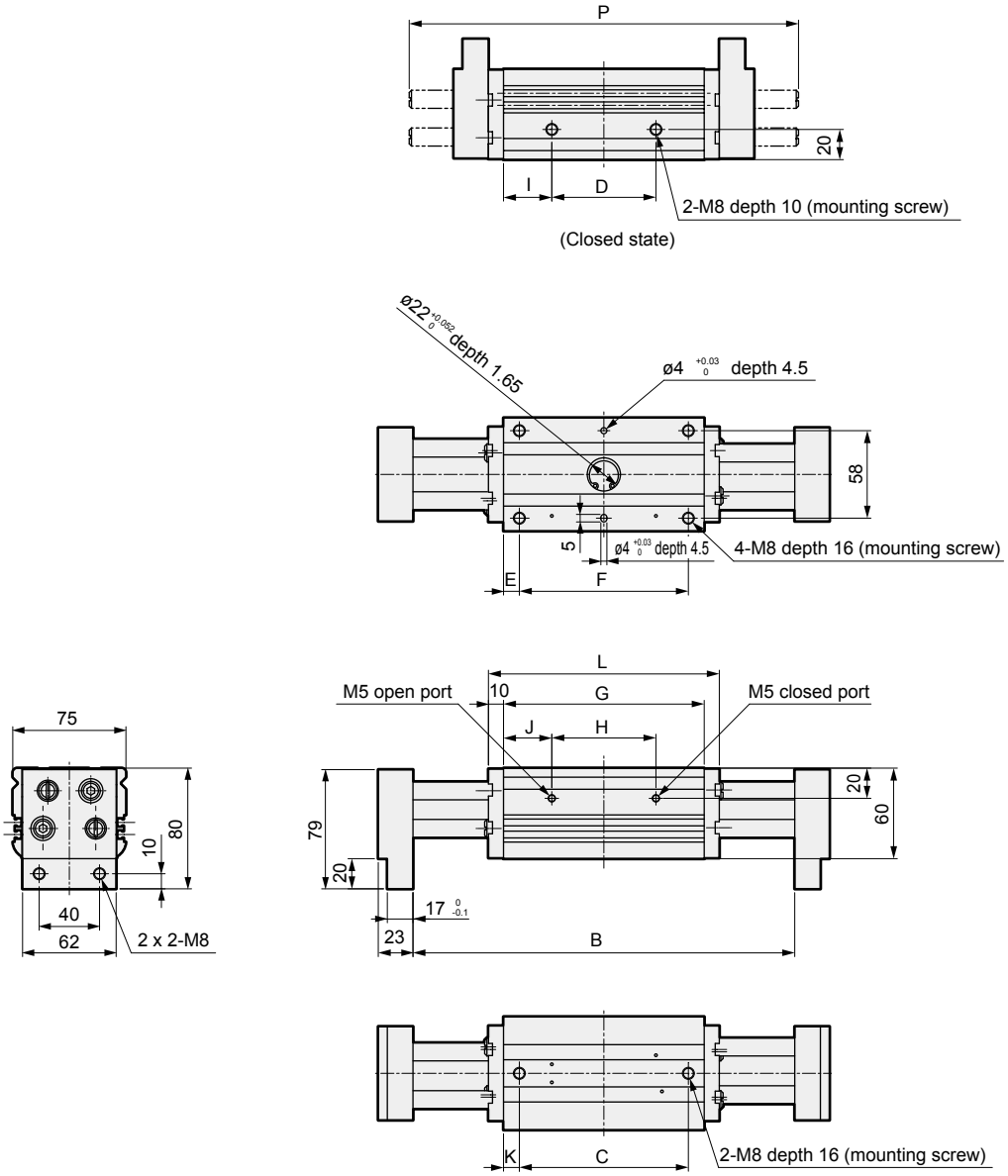

● With switch

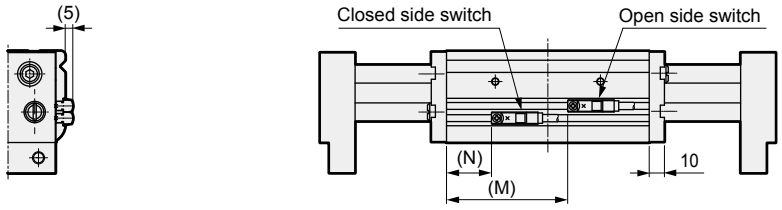

Code	B		C	D	E	F	G	H	I	J	K	L	M	N	P
	MAX	MIN													
Standard (blank)	161	111	70	48	10.5	70	91	41	21.5	25	10.5	111	46	21	166
L1	253	153	112	69	10.5	112	133	69	32	32	10.5	153	79.5	29.5	258
L2	291	171	130	87	10.5	130	151	87	32	32	10.5	171	97.5	37.5	296

MEMO

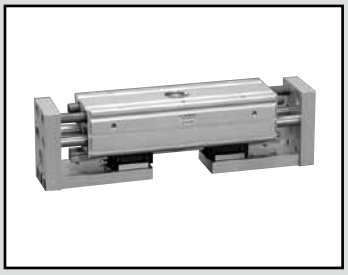

Linear guided large wide parallel hand
(Long stroke 1/long stroke 2)

HMFB Series

● Operational stroke length: Long stroke 1 100, 120, 160
Long stroke 2 120, 160, 200

Double acting

Specifications

Item	HMFB					
Size	25CS		32CS		40CS	
	L1	L2	L1	L2	L1	L2
Bore size mm	ø25×2		ø32×2		ø40×2	
Working fluid	Compressed air					
Max. working pressure MPa	0.7 (≈100 psi, 7 bar)					
Min. working pressure MPa	0.3 (≈44 psi, 3 bar)					
Ambient temperature °C	5 (41°F) to 60 (140°F)					
Port size	M5		Rc1/8			
Operating stroke length mm	100	120	120	160	160	200
Rod diameter mm	ø12		ø16		ø20	
Volumetric capacity (reciprocating) cm^3	75.4	90.5	145	193	301	377
Repeatability mm	±0.1					
Weight kg	4.06	4.13	5.97	7.2	10.05	11.8
Lubrication	Not required (use turbine oil class 1 ISO VG32 if necessary for lubrication)					

Switch specifications

Item	Proximity 2-wire	Proximity 3-wire
	T2H/T2V	T3H/T3V
Applications	Dedicated for programmable controller	For programmable controller, relay
Output method	-	NPN output
Power supply voltage	-	10 to 28 VDC
Load voltage/current	10 to 30 VDC, 5 to 20 mA (*1)	30 VDC, 100 mA or less
Indicator lamp	LED (Lit when ON)	
Leakage current	1 mA or less	10 μA or less
Weight	1 m:18 g 3 m:49 g 5 m:80 g	

*1 : The above max. load current is 20 mA at 25°C.
The current is lower than 20 mA if the operating ambient temperature around the switch is higher than 25˚C. (5 to 10 mA at 60˚C)

*2 : Refer to Ending Page 1 for detailed switch specifications and dimensions.

How to order

Without switch (built-in magnet for switch)

HMFB - 25CS - L1

With switch (built-in magnet for switch)

HMFB - 25CS - L1 - T2H - R

Ⓐ Size

Ⓑ Option

Ⓒ Switch model No.
* indicates the lead wire length.

Ⓓ Switch quantity

Code	Description
Ⓐ Size	
25CS	
32CS	
40CS	
Ⓑ Option	
L1	Long stroke 1
L2	Long stroke 2

Ⓒ Switch model No.

Axial lead wire	Radial lead wire	Contact	Voltage AC	Voltage DC	Display	Lead wire
T2H*	T2V*	Proximity		●	1-color display	2-wire
T3H*	T3V*			●		3-wire

* Lead wire length	
Blank	1 m (standard)
3	3 m (option)
5	5 m (option)

Ⓓ Switch quantity	
R	1 on open side
H	1 on closed side
D	2

[Example of model No.]

HMFB-25CS-L1-T2H-R

Model: Linear guided large wide parallel hand

Ⓐ Size : 25CS
Ⓑ Option : Long stroke 1
Ⓒ Switch model No.: Proximity T2H switch, lead wire 1 m
Ⓓ Switch quantity : 1 on open side

How to order switch

SW - T2H

Switch model No.
(Item Ⓒabove)

LCM
LCR
LCG
LCW
LCX
STM
STG
STS/STL
STR2
UCA2
ULK*
JSK/M2
JSG
JSC3/JSC4
USSD
UFCD
USC
UB
JSB3
LMB
LML
HCM
HCA
LBC
CAC4
UCAC2
CAC-N
UCAC-N
RCS2
RCC2
PCC
SHC
MCP
GLC
MFC
BBS
RRC
GRC
RV3*
NHS
HRL
LN
Hand
Chuk
MecHnd/Chuk
ShkAbs
FJ
FK
SpdContr
Ending
LSH-HP
LSH
FH100
BSA2
BHA/BHG
LHA
LHAG
HAP
HKP
HCP
HGP
HLF2
HLA/HLB
HLAG/HLBG
HLC
HLD
HMF
HMF-G
HMFB
HFP
FH500
HBL
HJL
HMD
HDL
HJD
BHE

Internal structure and parts list

● HMFB-25CS to 40CS-L1
● HMFB-25CS to 40CS-L2

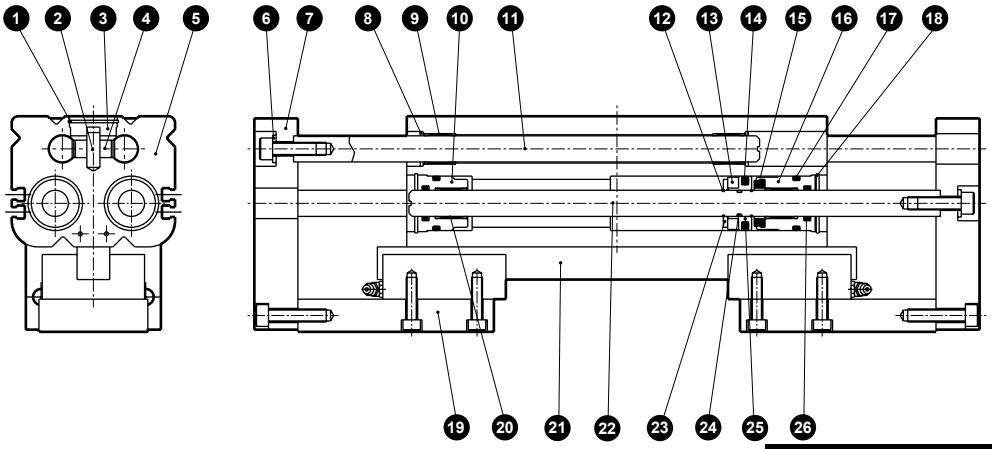

Cannot be disassembled

Parts list

No.	Part name	Material	Remarks	No.	Part name	Material	Remarks
1	C type snap ring	Stainless steel		14	Packing	Nitrile rubber	
2	Pinion gear axis	Stainless steel		15	Cushion	Urethane rubber	
3	Pinion cover	Stainless steel		16	Cylinder guard A	Aluminum alloy	
4	Pinion gear	Carbon steel		17	O-ring	Nitrile rubber	
5	Body	Aluminum alloy		18	C type snap ring	Stainless steel	
6	Plain washer	Stainless steel	32CS-L1, L2 are not available	19	Connection plate	Aluminum alloy	
7	Finger	Aluminum alloy		20	Bush	Sintering oil impregnated alloy	
8	Needle bearing sealant			21	LM guide		
9	Bush	Sintering oil impregnated alloy		22	Piston rod	Stainless steel	
10	Cylinder guard B	Aluminum alloy		23	Magnet holder	Stainless steel	
11	Guide rod	Stainless steel		24	O-ring	Nitrile rubber	
12	Piston fixing spring	Stainless steel		25	Piston	Stainless steel	
13	Magnet			26	Packing	Nitrile rubber	

Gripping power performance data

• Gripping power represents the thrust (per one finger) in the arrow direction shown in the figure.•
• The gripping power at a supply pressure 0.3, 0.5, and 0.7 MPa with finger length ℓ of hand is shown.
● Both open direction (⇦) and closed direction (➡)
——— (shown with continuous line)

(Note) When making a selection, read the precautions for design and selection on page 1764.

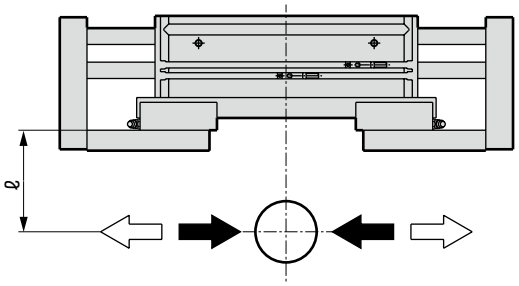

● HMFB-25CS

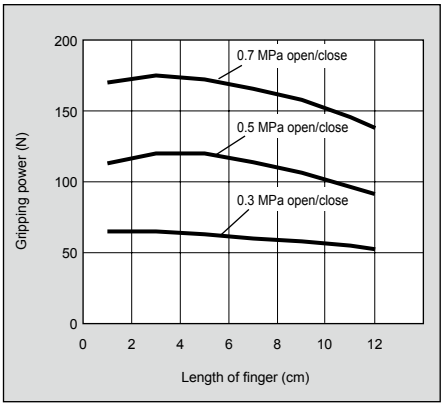

● HMFB-32CS

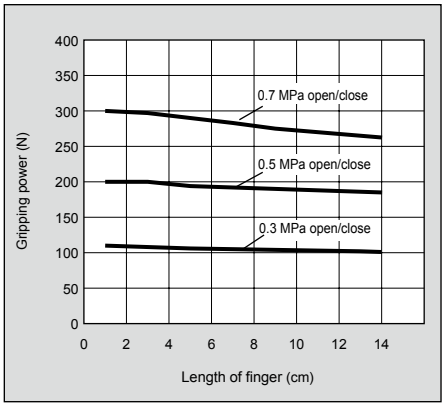

● HMFB-40CS

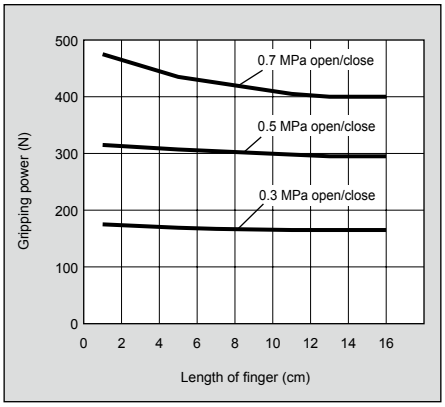

Dimensions

● HMFB-25CS-L1/L2

● With switch

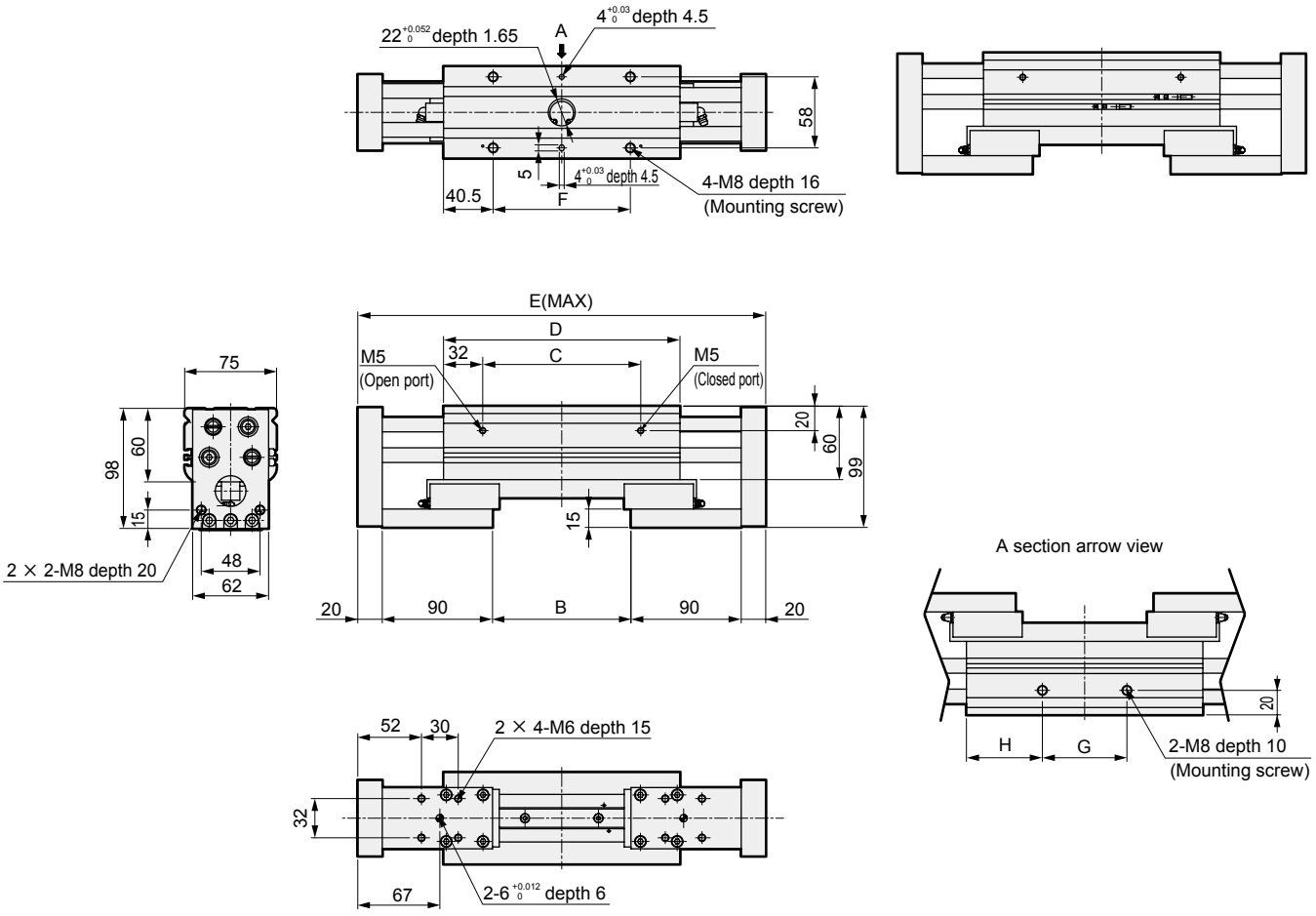

Code	B		C	D	E	F	G	H
	MAX	MIN						
L1	113	13	129	193	333	112	69	62
L2	131	11	127	191	351	110	87	52

LCM
LCR
LCG
LCW
LCX
STM
STG
STS/STL
STR2
UCA2
ULK*
JSK/M2
JSG
JSC3/JSC4
USSD
UFCD
USC
UB
JSB3
LMB
LML
HCM
HCA
LBC
CAC4
UCAC2
CAC-N
UCAC-N
RCS2
RCC2
PCC
SHC
MCP
GLC
MFC
BBS
RRC
GRC
RV3*
NHS
HRL
LN
Hand
Chuk
MecHnd/Chuk
ShkAbs
FJ
FK
SpdContr
Ending
LSH-HP
LSH
FH100
BSA2
BHA/BHG
LHA
LHAG
HAP
HKP
HCP
HGP
HLF2
HLA/HLB
HLAG/HLBG
HLC
HLD
HMF
HMF-G
HMFB
HFP
FH500
HBL
HJL
HMD
HDL
HJD
BHE

Dimensions

● HMFB-32CS-L1/L2

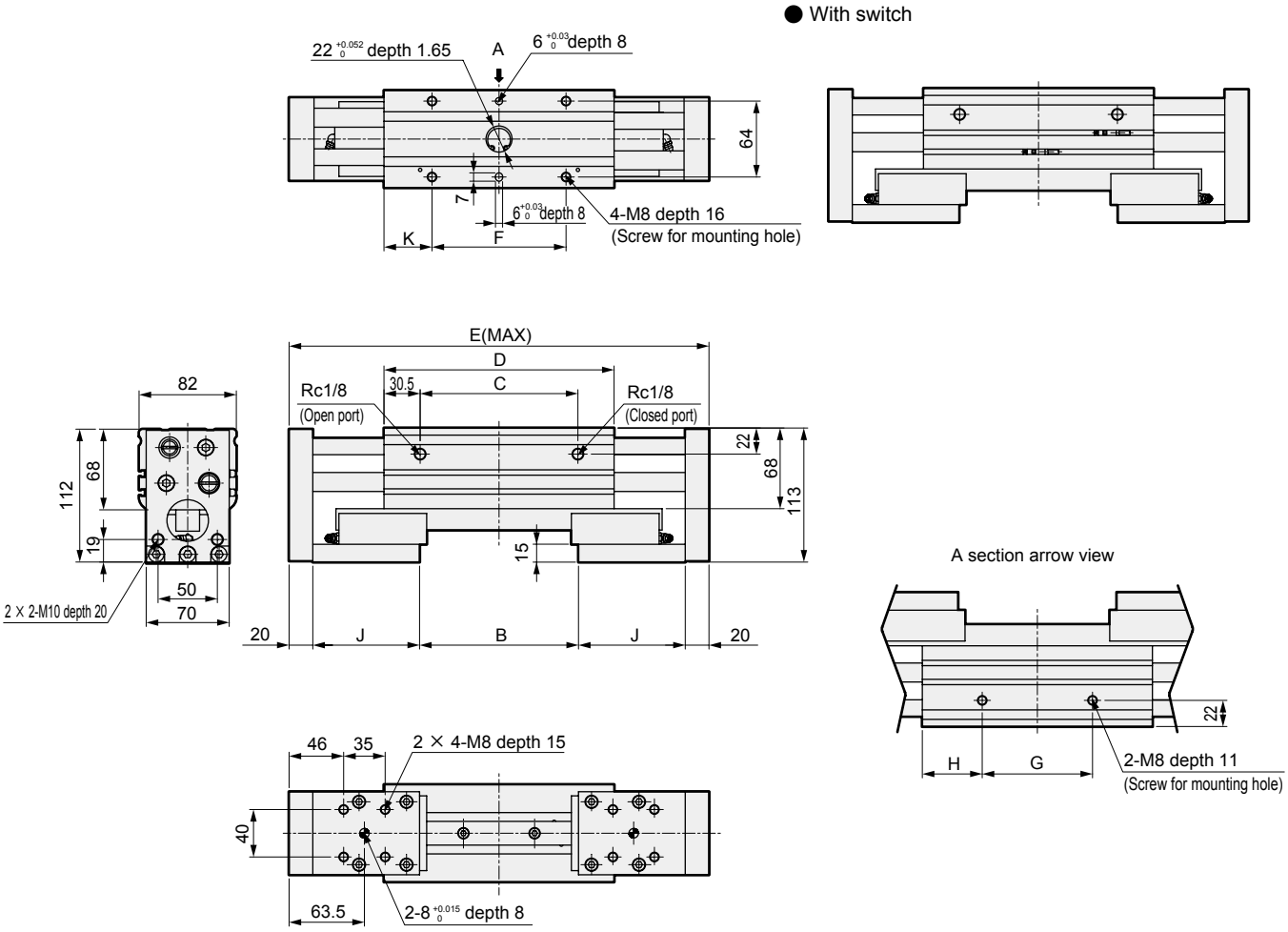

Code	B		C	D	E	F	G	H	J	K
	MAX	MIN								
L1	134	14	133	194	354	113	93	50.5	90	40.5
L2	174	14	193	254	454	167	133	60.5	120	43.5

Dimensions

● HMFB-40CS-L1/L2

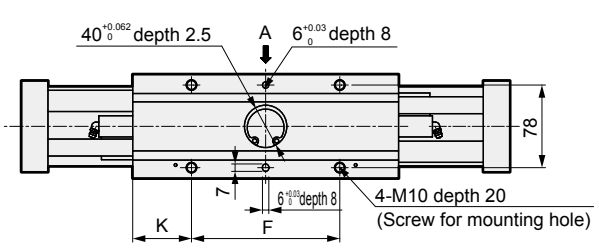

● With switch

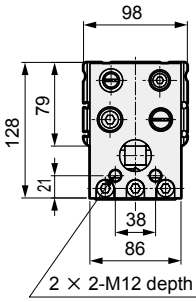

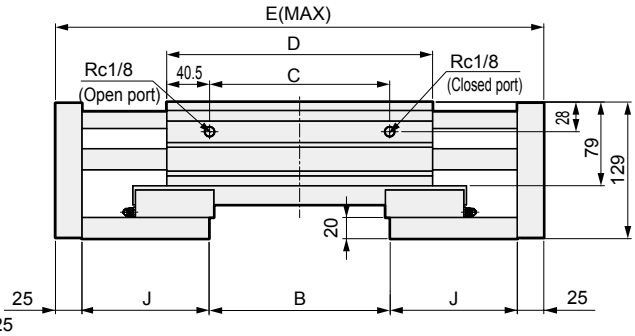

A section arrow view

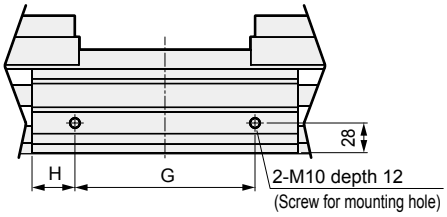

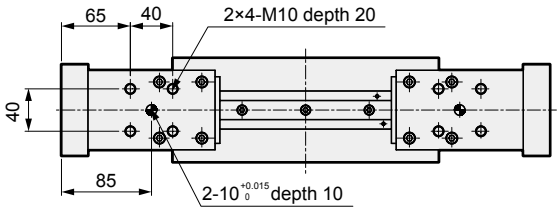

Code	B		C	D	E	F	G	H	J	K
	MAX	MIN								
L1	171	11	170	251	461	140	170	40.5	120	55.5
L2	214	14	233	314	564	202	160	77	150	56

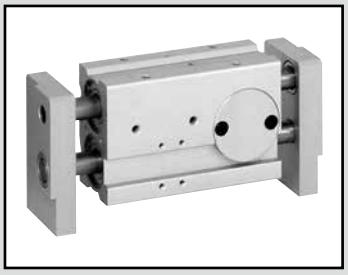

Wide parallel hand Double acting

HFP Series

● Operating stroke length: 20, 30, 40, 60 mm

Double acting

RoHS CAD

Specifications

Item		HFP			
Size		2CS	3CS	4CS	5CS
Bore size	mm	ø16×2	ø25×2	ø32×2	ø40×2
Actuation		Double acting			
Working fluid		Compressed air			
Max. working pressure	MPa	0.7 (≈100 psi, 7 bar)			
Min. working pressure	MPa	0.3 (≈44 psi, 3 bar)			
Ambient temperature	°C	5 (41°F) to 60 (140°F)			
Port size		M5			Rc1/8
Operating stroke length	mm	20	30	40	60
Rod diameter	mm	ø10	ø12	ø15	ø18
Volumetric capacity (reciprocating)	cm^3	4.90	22.70	50.2	120.3
Repeatability	mm	±0.03			
Weight	kg	0.59	1.10	2.07	3.90
Lubrication		Not required (use turbine oil class 1 ISO VG32 if necessary for lubrication)			

Switch specifications

Item	Proximity 2-wire	Proximity 3-wire
	T2H/V	T3H/V
Applications	Dedicated for programmable controller	For programmable controller, relay
Output method	-	NPN output
Power supply voltage	-	10 to 28 VDC
Load voltage/current	10 to 30 VDC, 5 to 20 mA (*1)	30 VDC or less, 100 mA or less
Indicator lamp	LED (Lit when ON)	
Leakage current	1 mA or less	10 μA or less
Weight	1 m:18 g 3 m:49 g 5 m:80 g *3	

*1 : The above max. load current is 20 mA at 25°C.
The current is lower than 20 mA if the operating ambient temperature around the switch is higher than 25˚C. (5 to 10 mA at 60˚C)

*2 : Refer to Ending Page 1 for detailed switch specifications and dimensions.

*3 : The weight of switch mounting bracket is 1.5 g.

How to order

Without switch (built-in magnet for switch)

HFP - 2CS

With switch (built-in magnet for switch)

HFP - 2CS - T2H - R

Ⓐ Size

Ⓑ Switch model No.

Ⓒ Switch quantity

Code	Description
Ⓐ Size	
2CS	
3CS	
4CS	
5CS	

Ⓑ Switch model No.

Axial lead wire	Radial lead wire	Contact	Voltage AC	Voltage DC	Display	Lead wire
T2H*	T2V*	Proximity		●	1-color display	2-wire
T3H*	T3V*			●		3-wire

* Lead wire length	
Blank	1 m (standard)
3	3 m (option)
5	5 m (option)

Ⓒ Switch quantity	
R	1 on open side
H	1 on closed side
D	2

[Example of model No.]

HFP-2CS-T2H-R

Model: Wide parallel hand

Ⓐ Size : 2CS

Ⓑ Switch model No. : Proximity T2H switch, lead wire 1 m

Ⓒ Switch quantity : 1 on open side

How to order switch

● For switch T*H*

· Switch body + mounting bracket set

HFP - T2H

↓ Switch model No. (ItemⒷabove)

· Switch body

SW - T2H

↓ Switch model No. (ItemⒷabove)

·Mounting bracket set

HFP - T

● For switch T*V*

· Switch body + mounting bracket set

HFP - T2V - *

↓ Switch model No. (ItemⒷabove)

· Switch body

SW - T2V

↓ Switch model No. (ItemⒷabove)

·Mounting bracket set

HFP - TV - *

(Select either R (open side) or H (closed side) for sections marked with an asterisk (*).)

LCM
LCR
LCG
LCW
LCX
STM
STG
STS/STL
STR2
UCA2
ULK*
JSK/M2
JSG
JSC3/JSC4
USSD
UFCD
USC
UB
JSB3
LMB
LML
HCM
HCA
LBC
CAC4
UCAC2
CAC-N
UCAC-N
RCS2
RCC2
PCC
SHC
MCP
GLC
MFC
BBS
RRC
GRC
RV3*
NHS
HRL
LN
Hand
Chuk
MecHnd/Chuk
ShkAbs
FJ
FK
SpdContr
Ending
LSH-HP
LSH
FH100
BSA2
BHA/BHG
LHA
LHAG
HAP
HKP
HCP
HGP
HLF2
HLA/HLB
HLAG/HLBG
HLC
HLD
HMF
HMF-G
HMFB
HFP
FH500
HBL
HJL
HMD
HDL
HJD
BHE

Internal structure and parts list

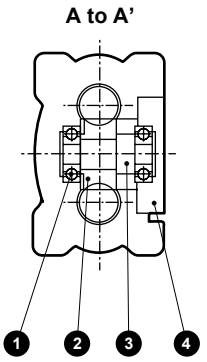

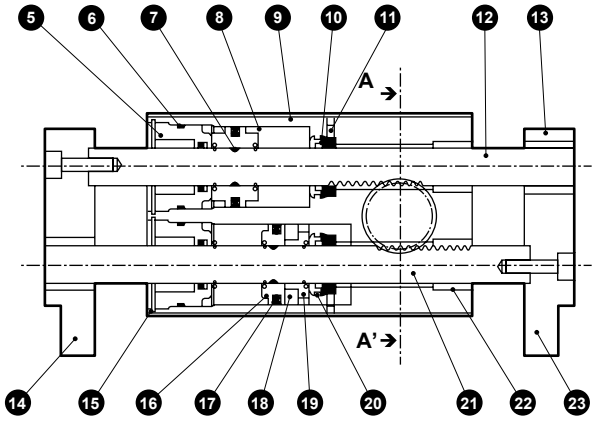

Cannot be disassembled

No.	Part name	Material	Remarks	No.	Part name	Material	Remarks
1	Bearing	Alloy steel		13	Bush	Copper alloy casting	
2	Pinion gear	Steel		14	Finger A	Aluminum alloy	
3	Pinion gear shaft	Steel		15	Snap ring	Stainless steel	
4	Bearing cover	Aluminum alloy		16	Piston A	Aluminum alloy	
5	Packing seal housing A	Aluminum alloy		17	Piston packing	Nitrile rubber	
6	Gasket A	Nitrile rubber		18	Magnet	Plastic magnet	
7	Piston gasket	Nitrile rubber		19	Piston B	Aluminum alloy	
8	Piston fixing spring	Stainless steel		20	Gasket B	Nitrile rubber	
9	Body	Aluminum alloy		21	Piston rod B	Stainless steel	
10	Rod packing	Nitrile rubber		22	Bush	Copper alloy casting	
11	Packing seal housing B	Aluminum alloy		23	Finger B	Aluminum alloy	
12	Piston rod A	Stainless steel					

Gripping power performance data

- Gripping power represents the thrust (per one finger) in the arrow direction shown in the figure.
- The gripping power in the opening/closing directions with finger length L of hand with a supply pressure of 0.3, 0.5 and 0.7 MPa is shown.
  ● Both open direction (⇦) and closed direction (➡)
  ——— (shown with continuous line)

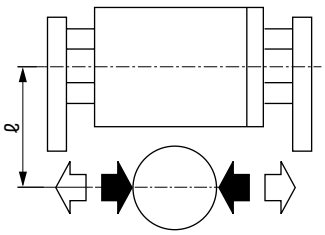

(Note) When making a selection, read the precautions for design and selection on page 1764.

● HFP-2CS

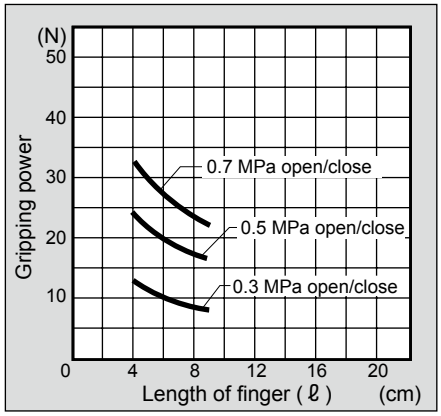

● HFP-3CS

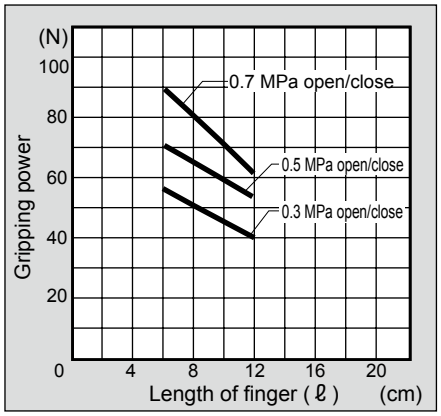

● HFP-4CS

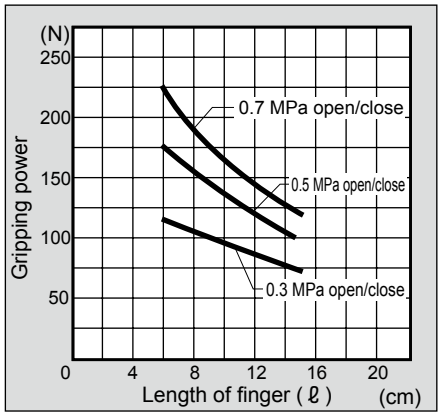

● HFP-5CS

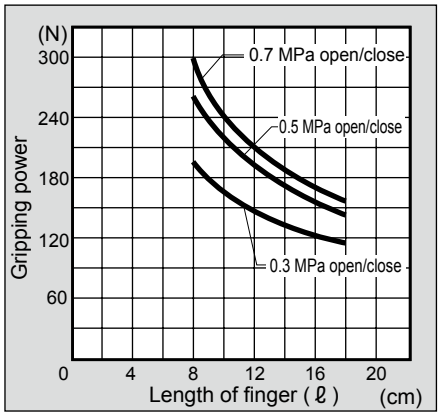

Dimensions

● HFP-2CS Standard

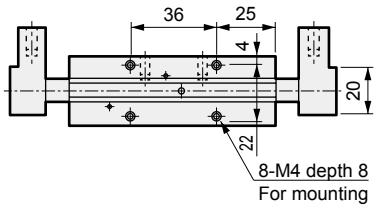

● With switch

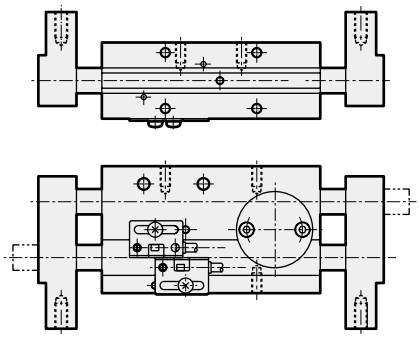

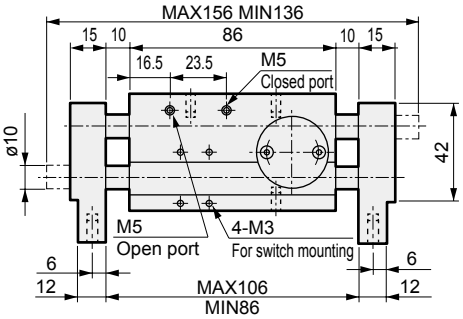

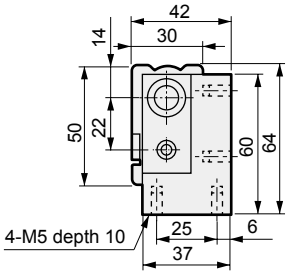

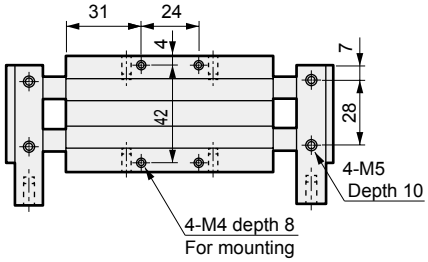

● HFP-3CS Standard

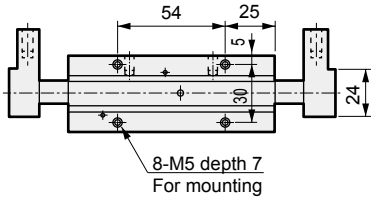

● With switch

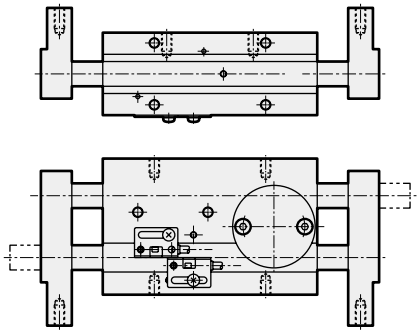

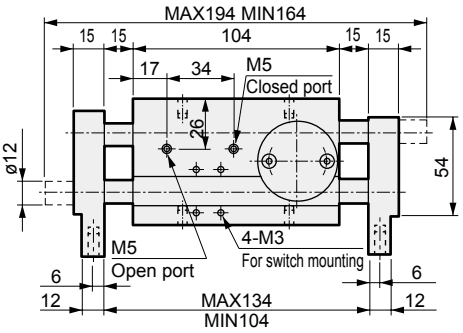

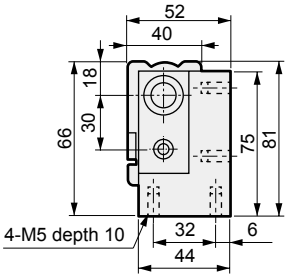

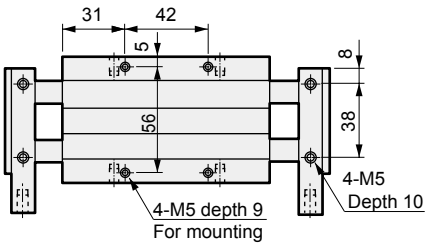

LCM
LCR
LCG
LCW
LCX
STM
STG
STS/STL
STR2
UCA2
ULK*
JSK/M2
JSG
JSC3/JSC4
USSD
UFCD
USC
UB
JSB3
LMB
LML
HCM
HCA
LBC
CAC4
UCAC2
CAC-N
UCAC-N
RCS2
RCC2
PCC
SHC
MCP
GLC
MFC
BBS
RRC
GRC
RV3*
NHS
HRL
LN
Hand
Chuk
MecHnd/Chuk
ShkAbs
FJ
FK
SpdContr
Ending
LSH-HP
LSH
FH100
BSA2
BHA/BHG
LHA
LHAG
HAP
HKP
HCP
HGP
HLF2
HLA/HLB
HLAG/HLBG
HLC
HLD
HMF
HMF-G
HMFB
HFP
FH500
HBL
HJL
HMD
HDL
HJD
BHE

Dimensions

● HFP-4CS Standard

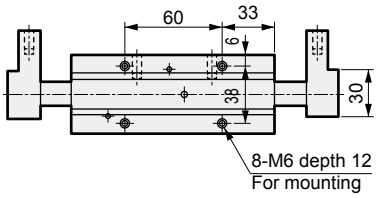

● With switch

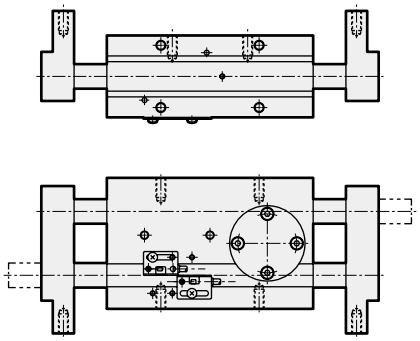

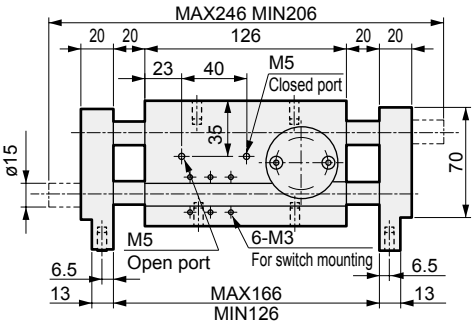

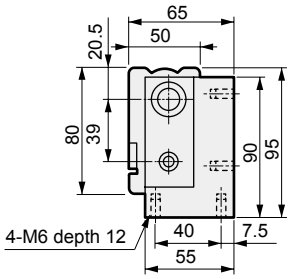

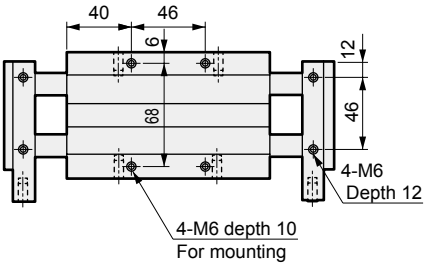

● HFP-5CS Standard

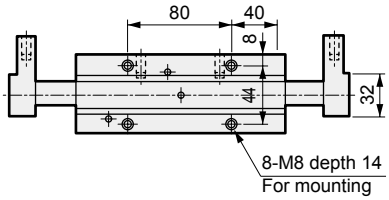

● With switch

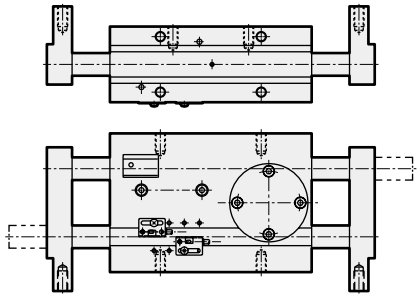

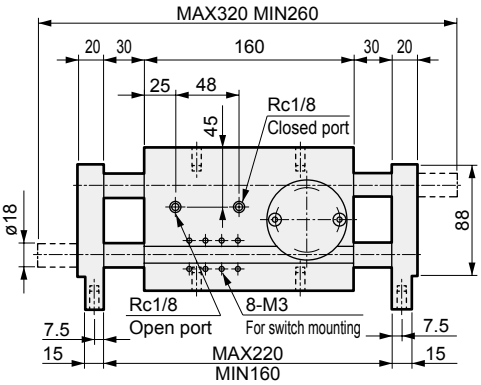

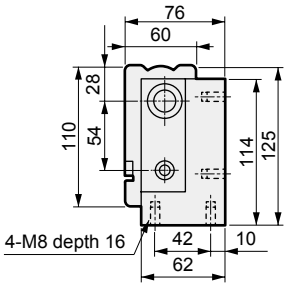

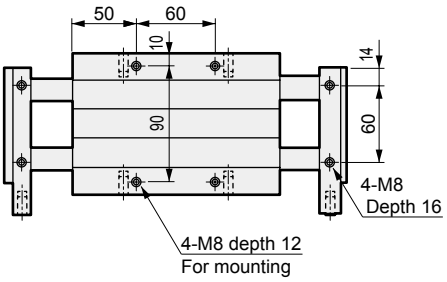

MEMO

Feather hand (mini-fulcrum hand) Double acting/single acting

FH500 Series

● Open/close angle: 20° at open, -5° at closed

Double acting

Single acting (normally open)

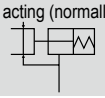

Specifications

Item	FH500							
	FH510-D	FH512-D	FH516-D	FH520-D	FH510-O	FH512-O	FH516-O	FH520-O
Actuation	Double acting				Single acting			
Working fluid	Compressed air							
Max. working pressure MPa	0.7 (≈100 psi, 7 bar)							
Min. working pressure MPa	0.15 (≈22 psi, 1.5 bar)				0.25 (≈36 psi, 2.5 bar)			
Proof pressure MPa	1.05 (≈150 psi, 10.5 bar)							
Ambient temperature °C	5 (41°F) to 60 (140°F)							
Port size	M3		M5		M3		M5	
Open and close angle °	20° at open -5° at closed							
Weight g	43	53	92	135	43	53	92	136
Repeatability mm	±0.03							
Max. operating frequency times/second	3							
Cushion	Open side rubber cushion							
Option	Proximity switch (2-wire/3-wire) * Closed side speed controller/end mount							

* Integrated speed controller is available only for double acting.

Switch specifications

Item	Proximity 2-wire	Proximity 3-wire
	T2H/V	T3H/V
Applications	Dedicated for programmable controller	For programmable controller, relay
Output method	-	NPN output
Power supply voltage	-	10 to 28 VDC
Load voltage/current	10 to 30 VDC, 5 to 20 mA (*1)	30 VDC or less, 100 mA or less
Indicator lamp	LED (Lit when ON)	
Leakage current	1 mA or less	10 μA or less
Weight	1 m:18 g 3 m:49 g 5 m:80 g	

*1 : The above max. load current is 20 mA at 25°C. The current is lower than 20 mA if the operating ambient temperature around the switch is higher than 25˚C. (5 to 10 mA at 60˚C)

*2 : Refer to Ending Page 1 for detailed switch specifications and dimensions.

How to order

Without switch (built-in magnet for switch)

FH5 10 - D Y1 ——— B

With switch (built-in magnet for switch)

FH5 10 - D Y1 - T2V - R - B

Ⓐ Bore size

Ⓑ Option

Ⓒ Attachment *1

Ⓓ Switch model No. *2
* indicates the lead wire length.

Ⓔ Switch quantity

Ⓕ End mount *3

Code	Description
Ⓐ Bore size	
10	ø10
12	ø12
16	ø16
20	ø20

Ⓑ Option	
D	Double acting
O	Single acting (normally open)
Z	Double acting integrated speed controller

Ⓒ Attachment	
Blank	Without attachment
Y1	With attachment (Material S50C)
Y2	With attachment (Material MC nylon)

Ⓓ Switch model No.

Axial lead wire	Radial lead wire	Contact	Voltage AC	Voltage DC	Display	Lead wire
T2H*	T2V*	Proximity		●	1-color display	2-wire
T3H*	T3V*	Proximity		●	1-color display	3-wire

*** Lead wire length**	
Blank	1 m (standard)
3	3 m (option)
5	5 m (option)

Ⓔ Switch quantity	
R	1 on open side
H	1 on closed side
D	2

Ⓕ End mount	
Blank	Without end mount
B	With end mount

⚠ Precautions for model No. selection

*1 : Refer to pages 1762 and 1763 for the dimensions and compatible model of the attachment. When ordered as an option, two are attached at shipment.
*2 : Switches other than Ⓓ Switch model No. are also available. (Made to order)
Refer to Ending Page 1 for details.
*3 : When with end mount (model No. B), select switch with radial lead wire (model No. T*V).
The end mount is attached at delivery.

[Example of model No.]

FH512-DY1-T2V-R-B

Model: Feather hand (mini-fulcrum hand)

Ⓐ Bore size : ø12
Ⓑ Option : Double acting
Ⓒ Attachment : With attachment (Material S50C)
Ⓓ Switch model No. : Proximity T2V switch, lead wire 1 m
Ⓔ Switch quantity : 1 on right (port) side open position
Ⓕ End mount : With end mount

How to order end mount

FH - B - 10

Code	Description
Ⓐ Bore size	
10	ø10
12	ø12
16	ø16
20	ø20

How to order switch

SW - T2H

Switch model No.
(Item Ⓓ above)

LCM
LCR
LCG
LCW
LCX
STM
STG
STS/STL
STR2
UCA2
ULK*
JSK/M2
JSG
JSC3/JSC4
USSD
UFCD
USC
UB
JSB3
LMB
LML
HCM
HCA
LBC
CAC4
UCAC2
CAC-N
UCAC-N
RCS2
RCC2
PCC
SHC
MCP
GLC
MFC
BBS
RRC
GRC
RV3*
NHS
HRL
LN
Hand
Chuk
MecHnd/Chuk
ShkAbs
FJ
FK
SpdContr
Ending
LSH-HP
LSH
FH100
BSA2
BHA/BHG
LHA
LHAG
HAP
HKP
HCP
HGP
HLF2
HLA/HLB
HLAG/HLBG
HLC
HLD
HMF
HMF-G
HMFB
HFP
FH500
HBL
HJL
HMD
HDL
HJD
BHE

Internal structure and parts list

● Standard (double acting)/O (normally open)

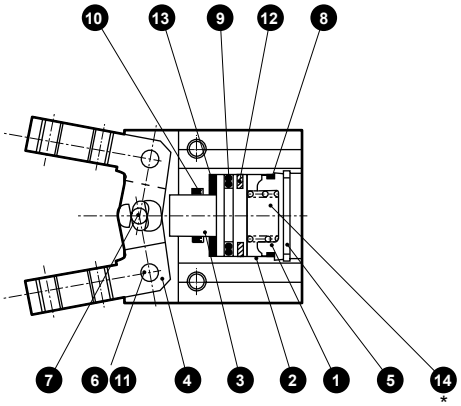

● With speed controller

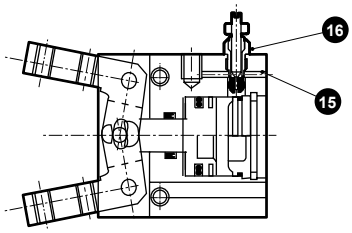

Cannot be disassembled

* Standard (double acting) does not contain ⓮ spring

No.	Part name	Material	Remarks	No.	Part name	Material	Remarks
1	Cylinder guard	Acetal resin		9	Piston packing	Nitrile rubber	
2	Body	Aluminum alloy	Lubrication alumite treatment	10	Rod packing	Nitrile rubber	
3	Piston	Stainless steel		11	Hexagon socket set screw	Stainless steel	
4	Finger	Alloy steel	Heat treatment	12	Magnet		Nickeling
5	Snap ring	Stainless steel		13	Cushion	Urethane rubber	
6	Fulcrum axis	Alloy steel	Heat treatment	14	Spring	Stainless steel	
7	Operation shaft	Alloy steel	Heat treatment	15	Steel ball	Stainless steel	
8	Cylinder gasket	Nitrile rubber		16	Flow control valve assembly		

Gripping power performance data

- Gripping power represents the thrust (per one finger) in the arrow direction shown in the figure.
- The gripping power in the opening/closing directions with finger length L of hand with a supply pressure of 0.15 to 0.7 MPa is shown.

● Open direction (⇦) - - - - - - (shown with broken line)
● Closed direction (➡) ——— (shown with continuous line)

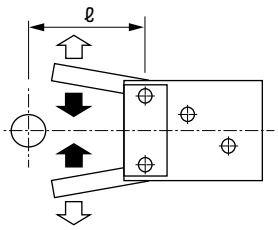

(Note) Single acting closed side gripping power is decreased by 25 to 30% compared to the double acting. When making a selection, read the precautions for design and selection on page 1764.

● FH510

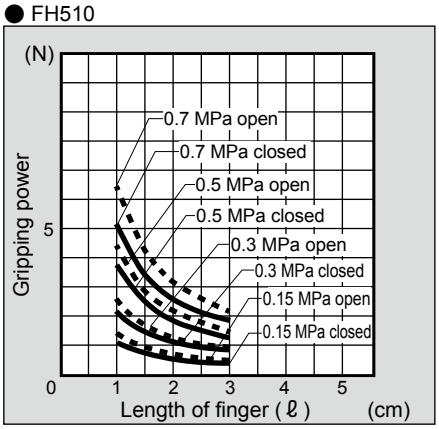

● FH512

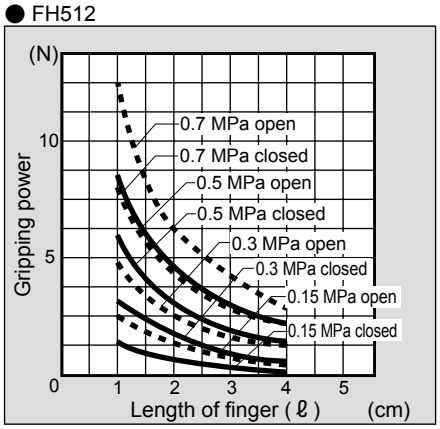

● FH516

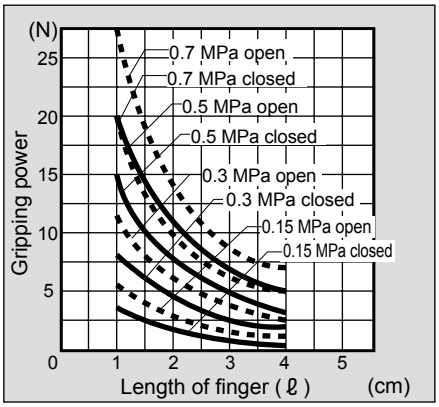

● FH520

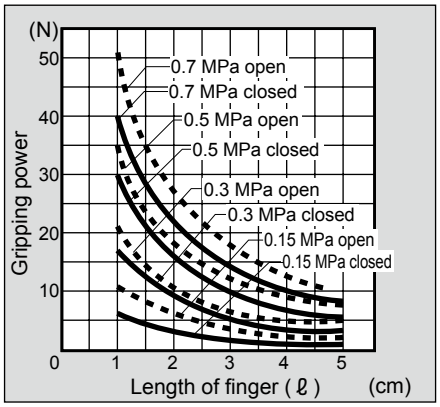

Dimensions

● FH510-D/FH510-O

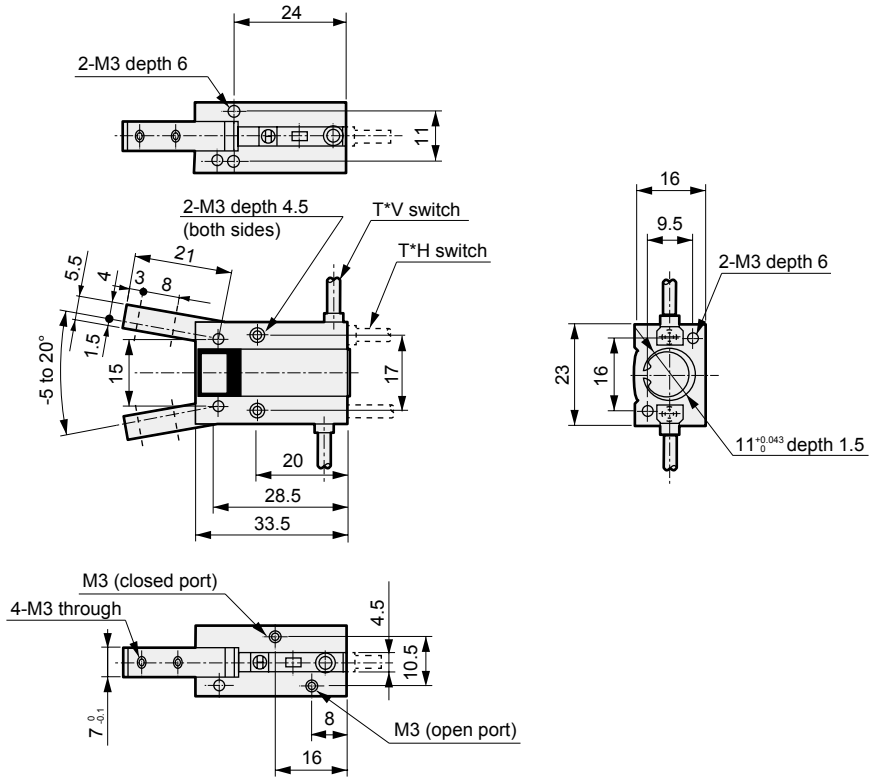

● With speed controller (FH510-Z)

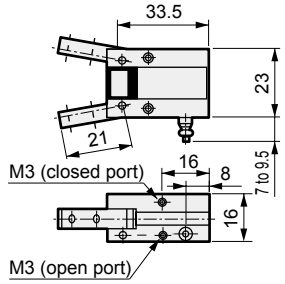

● With end mount

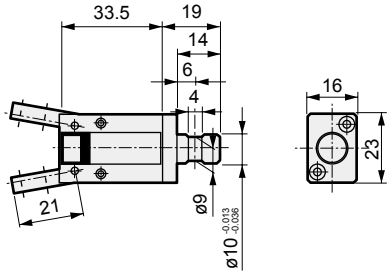

● FH512-D/FH512-O

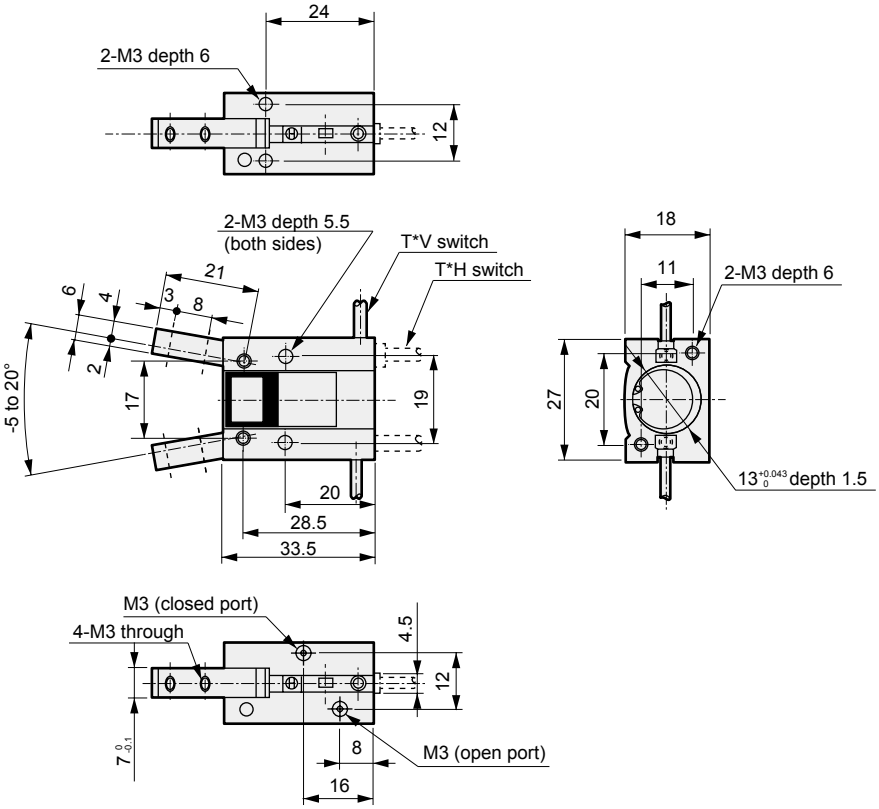

● With speed controller (FH512-Z)

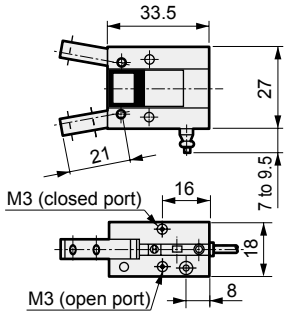

● With end mount

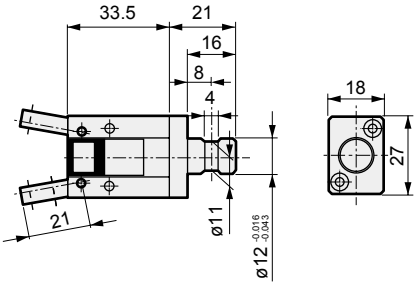

LCM
LCR
LCG
LCW
LCX
STM
STG
STS/STL
STR2
UCA2
ULK*
JSK/M2
JSG
JSC3/JSC4
USSD
UFCD
USC
UB
JSB3
LMB
LML
HCM
HCA
LBC
CAC4
UCAC2
CAC-N
UCAC-N
RCS2
RCC2
PCC
SHC
MCP
GLC
MFC
BBS
RRC
GRC
RV3*
NHS
HRL
LN
Hand
Chuk
MecHnd/Chuk
ShkAbs
FJ
FK
SpdContr
Ending
LSH-HP
LSH
FH100
BSA2
BHA/BHG
LHA
LHAG
HAP
HKP
HCP
HGP
HLF2
HLA/HLB
HLAG/HLBG
HLC
HLD
HMF
HMF-G
HMFB
HFP
FH500
HBL
HJL
HMD
HDL
HJD
BHE

Dimensions

● FH516-D/FH516-O

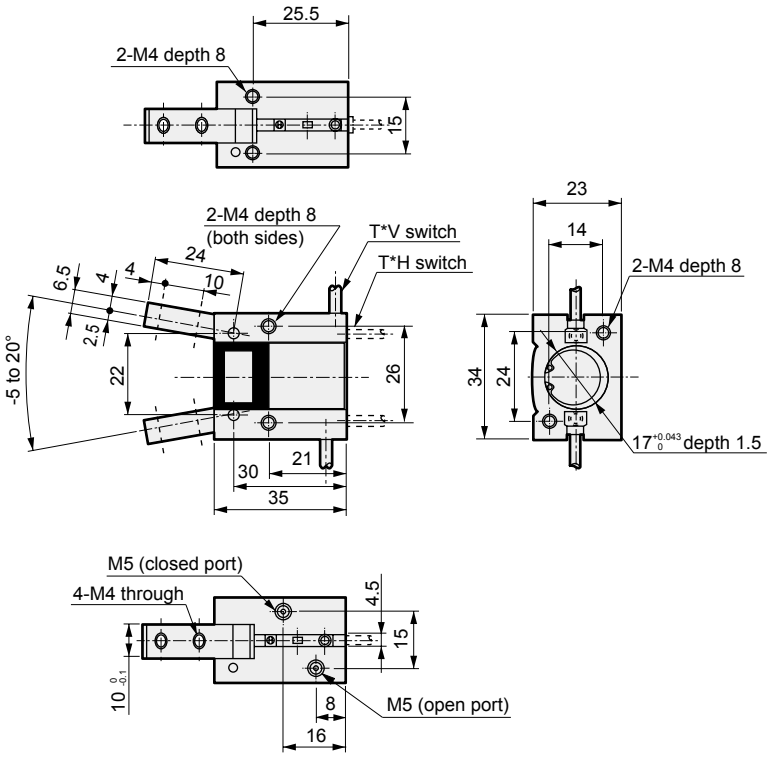

● With speed controller (FH516-Z)

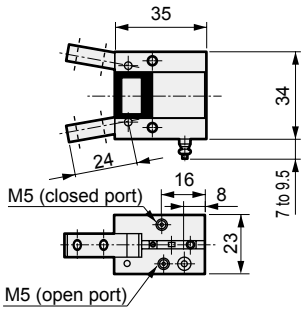

● With end mount

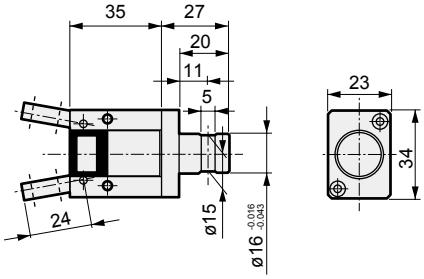

● FH520-D/FH520-O

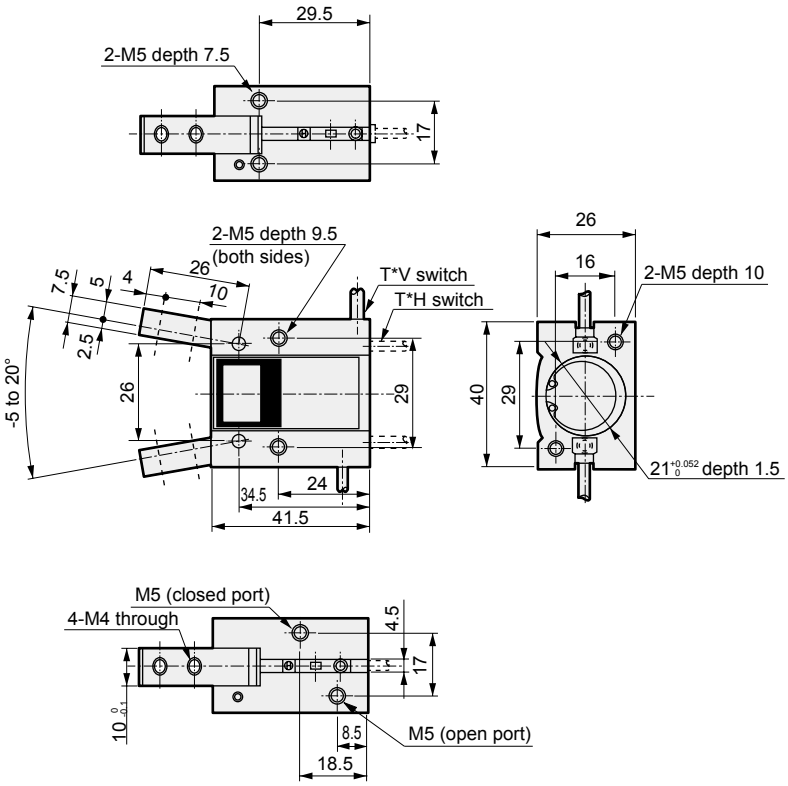

● With speed controller (FH520-Z)

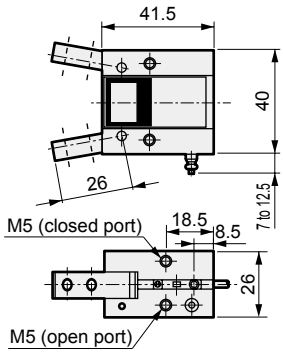

● With end mount

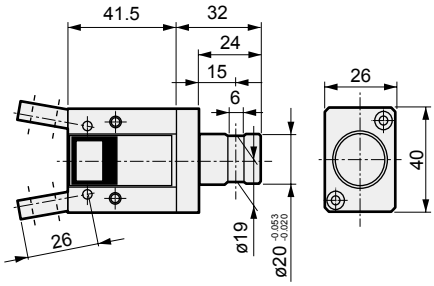

MEMO

Fulcrum hand Double acting/single acting

HBL Series

● Open/close angle: -5° to 20°

Double acting

Single acting (normally open)

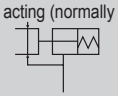

Single acting (normally closed)

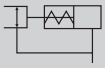

RoHS CAD

Specifications

Item		HBL			
Size		1C	2CS	3CS	4CS
Bore size	mm	ø15	ø20	ø25	ø40
Actuation		Double acting/single acting			
Working fluid		Compressed air			
Max. working pressure	MPa	0.7 (≈100 psi, 7 bar)			
Min. working pressure	MPa	0.3 (≈44 psi, 3 bar)			
Ambient temperature	°C	5 (41°F) to 60 (140°F)			
Port size		M5			Rc1/8
Open and close angle	°	-5 to 20			
Rod diameter	mm	ø8	ø10	ø12	ø14
Volumetric capacity (reciprocating)	cm^3	0.5	2.2	4.3	14.2
Repeatability	mm	±0.03			
Weight	kg	0.09	0.22	0.39	0.82
Lubrication		Not required (use turbine oil class 1 ISO VG32 if necessary for lubrication)			

Switch specifications

Item	Proximity 2-wire	Proximity 3-wire
	T2H/V	T3H/V
Applications	Dedicated for programmable controller	For programmable controller, relay
Output method	-	NPN output
Power supply voltage	-	10 to 28 VDC
Load voltage/current	10 to 30 VDC, 5 to 20 mA (*1)	30 VDC or less, 100 mA or less
Indicator	LED (Lit when ON)	
Leakage current	1 mA or less	10 μA or less
Weight	1 m:18 g 3 m:49 g 5 m:80 g *3	

*1 : The above max. load current is 20 mA at 25°C.
The current is lower than 20 mA if the operating ambient temperature around the switch is higher than 25˚C. (5 to 10 mA at 60˚C)
*2 : Refer to Ending Page 1 for detailed switch specifications and dimensions.
*3 : The weight of switch mounting bracket is 1.5 g.

How to order

Without switch (built-in magnet for switch)

HBL - 2CS - O

With switch (built-in magnet for switch)

HBL - 2CS - O - T2H - R

Ⓐ Size

Ⓑ Option *1

Ⓒ Switch model No.

Ⓓ Switch quantity *2

Code	Description
Ⓐ Size	
1C	
2CS	
3CS	
4CS	
Ⓑ Option	
Blank	Standard (double acting)
O	Single acting (normally open)
C	Single acting (normally closed)
Y1	With attachment (S50C)
Y2	With attachment (MC nylon)

Ⓒ Switch model No.

Lead wire Straight type	Lead wire L-shaped type	Contact	Voltage AC	Voltage DC		Lead wire
T2H*	**T2V***	Proximity		●	1-color	2-wire
T3H*	**T3V***			●	LED	3-wire

*** Lead wire length**	
Blank	1 m (standard)
3	3 m (option)
5	5 m (option)

Ⓓ Switch quantity	
R	1 on open side
H	1 on closed side
D	2

⚠ Precautions for model No. selection

*1 : Refer to pages 1762 and 1763 for the dimensions and compatible model of the attachment. When ordered as an option, two are attached at shipment.
*2 : If Ⓐ Size is "1C", switch mounting cannot be selected.

[Example of model No.]

HBL-2CS-O-T2H-R

Model: Fulcrum hand
Ⓐ Size : 2CS
Ⓑ Option : Single acting, normally open type
Ⓒ Switch model No. : Proximity T2H switch, lead wire 1 m
Ⓓ Switch quantity : 1 on open side

How to order switch

● For switch T*H*

• Switch body + mounting bracket set

HBL - T2H

Switch model No. (Item Ⓒ above)

• Switch body

SW - T2H

Switch model No. (Item Ⓒ above)

• Mounting bracket set

HBL - T

● For switch T*V*

• Switch body + mounting bracket set

HBL - T2V - *

Switch model No. (Item Ⓒ above)

• Switch body

SW - T2V

Switch model No. (Item Ⓒ above)

• Mounting bracket set

HBL - TV - *

(Select either R (open side) or H (closed side) for sections marked with an asterisk (*).)
However, for Size 2CS, specify H (closed side) regardless of the switch mounting position.

LCM
LCR
LCG
LCW
LCX
STM
STG
STS/STL
STR2
UCA2
ULK*
JSK/M2
JSG
JSC3/JSC4
USSD
UFCD
USC
UB
JSB3
LMB
LML
HCM
HCA
LBC
CAC4
UCAC2
CAC-N
UCAC-N
RCS2
RCC2
PCC
SHC
MCP
GLC
MFC
BBS
RRC
GRC
RV3*
NHS
HRL
LN
Hand
Chuk
MecHnd/Chuk
ShkAbs
FJ
FK
SpdContr
Ending
LSH-HP
LSH
FH100
BSA2
BHA/BHG
LHA
LHAG
HAP
HKP
HCP
HGP
HLF2
HLA/HLB
HLAG/HLBG
HLC
HLD
HMF
HMF-G
HMFB
HFP
FH500
HBL
HJL
HMD
HDL
HJD
BHE

Internal structure and parts list

● Standard (double acting)/O (normally open)

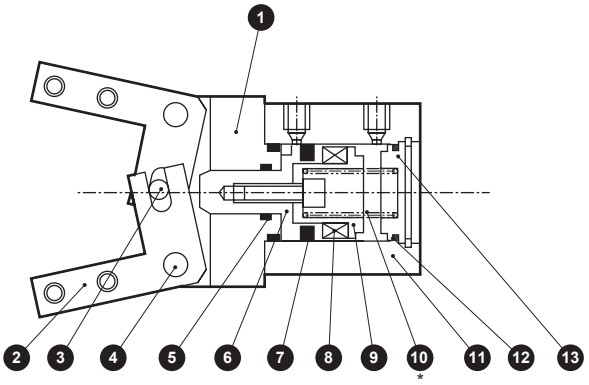

● C (normally closed)

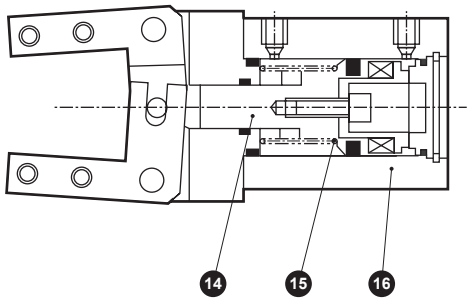

* Standard (double acting) does not contain ● spring.

No.	Part name	Material	Remarks	No.	Part name	Material	Remarks
1	Body	Aluminum alloy		9	Piston B	Stainless steel (1CS) Acetal resin (2 to 4CS)	
2	Finger	Steel		10	Spring	Stainless steel	O type only
3	Operation shaft	Steel		11	Cylinder	Aluminum alloy	
4	Fulcrum axis	Steel		12	Cylinder gasket	Nitrile rubber	
5	Rod packing	Nitrile rubber		13	Cylinder guard	Aluminum alloy (1CS) Acetal resin (2 to 4CS)	
6	Piston A	Stainless steel		14	Piston	Stainless steel	
7	Piston packing	Nitrile rubber		15	Spring	Stainless steel	
8	Magnet			16	Cylinder	Aluminum alloy	

Gripping force performance data

- Gripping force represents the thrust (per finger) in the arrow direction shown in the figure.
- The gripping force in the opening/closing directions with finger length L of hand with a supply pressure of 0.3, 0.5 and 0.7 MPa is shown.

● Open direction (⇦)- - - - - - (shown with broken line)
● Closed direction (➡)——— (shown with continuous line)

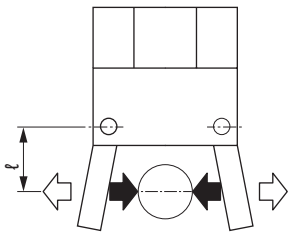

(Note) O type gripping force decreases approximately 20 to 30% in the closed direction compared to double acting.
C type gripping force decreases approximately 10 to 20% in the open direction compared to the double acting.
When making a selection, read the precautions for design and selection on page 1764.

● HBL-1C

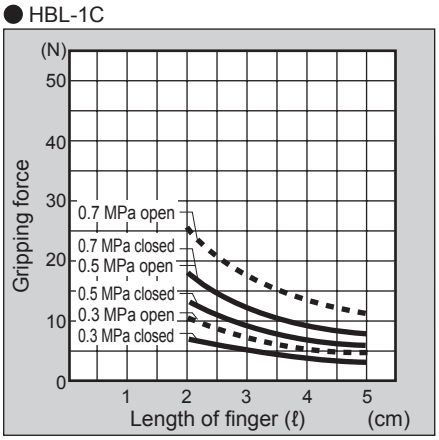

● HBL-2CS

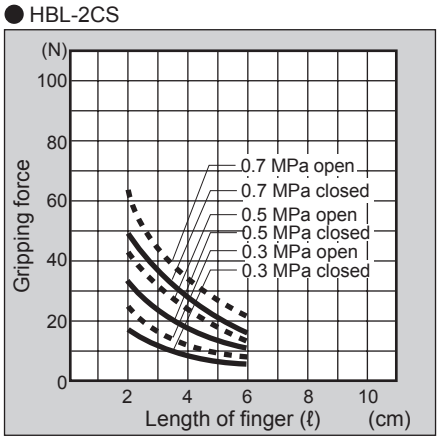

● HBL-3CS

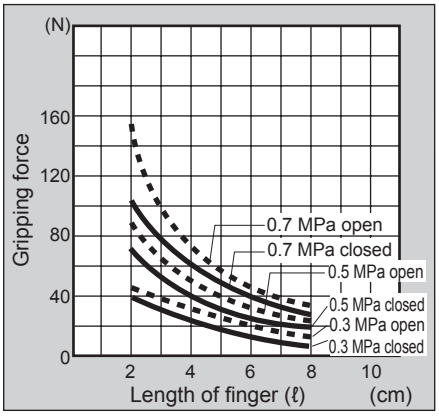

● HBL-4CS

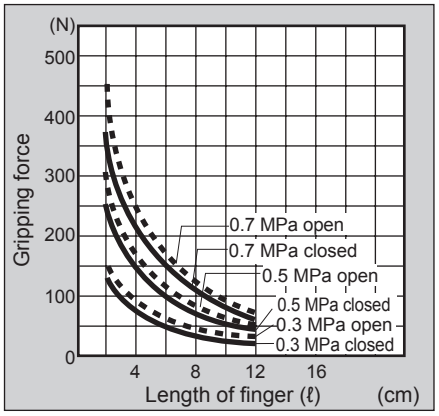

Dimensions

● HBL-1C Standard/O/C

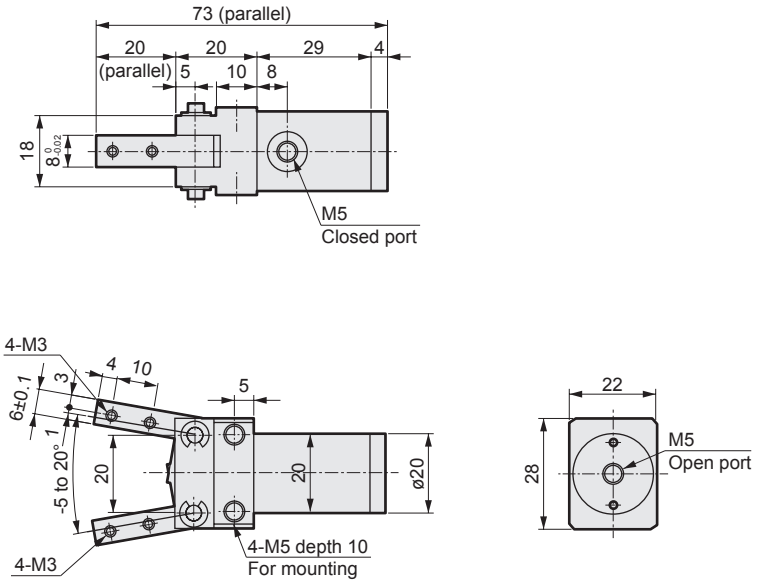

● HBL-2CS Standard/O/C

● Dimensions in ( ) are for C [normally closed] specifications.

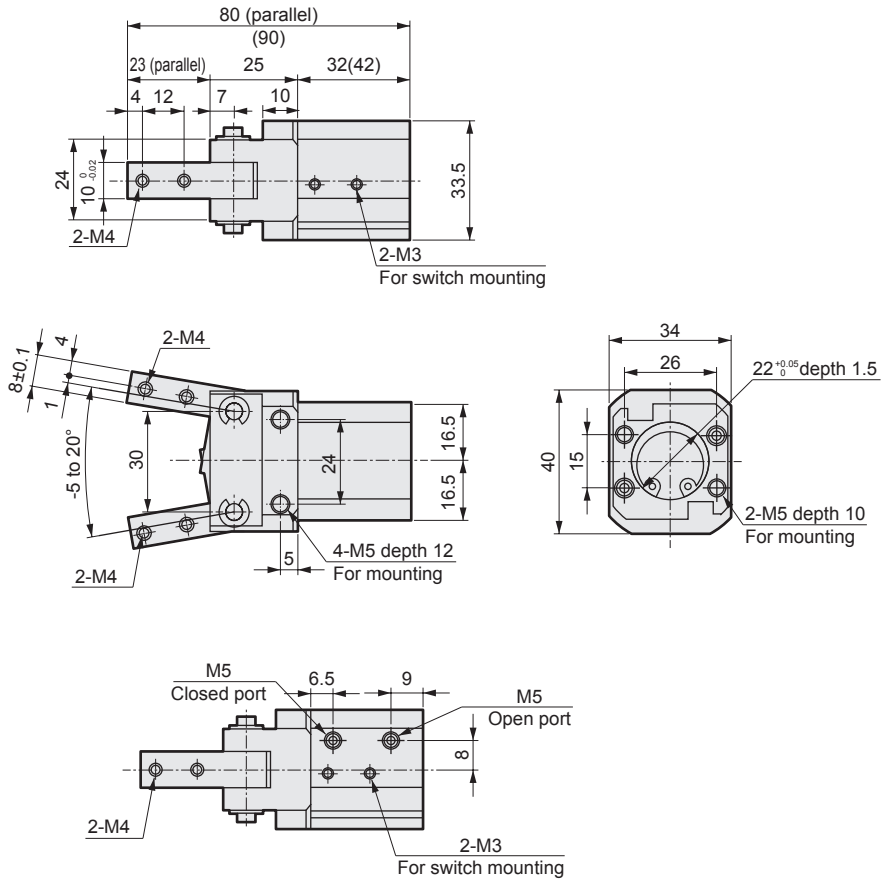

● With switch

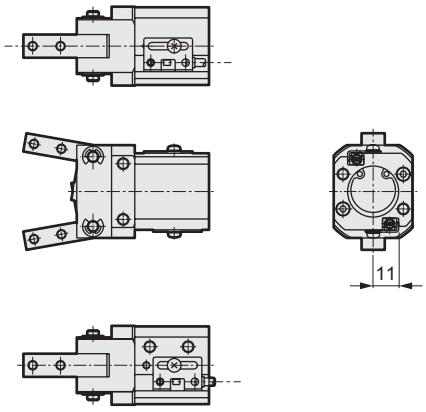

LCM
LCR
LCG
LCW
LCX
STM
STG
STS/STL
STR2
UCA2
ULK*
JSK/M2
JSG
JSC3/JSC4
USSD
UFCD
USC
UB
JSB3
LMB
LML
HCM
HCA
LBC
CAC4
UCAC2
CAC-N
UCAC-N
RCS2
RCC2
PCC
SHC
MCP
GLC
MFC
BBS
RRC
GRC
RV3*
NHS
HRL
LN
Hand
Chuk
MecHnd/Chuk
ShkAbs
FJ
FK
SpdContr
Ending
LSH-HP
LSH
FH100
BSA2
BHA/BHG
LHA
LHAG
HAP
HKP
HCP
HGP
HLF2
HLA/HLB
HLAG/HLBG
HLC
HLD
HMF
HMF-G
HMFB
HFP
FH500
HBL
HJL
HMD
HDL
HJD
BHE

Dimensions

● HBL-3CS Standard/O/C

● Dimensions in ( ) are for C [normally closed] specifications.

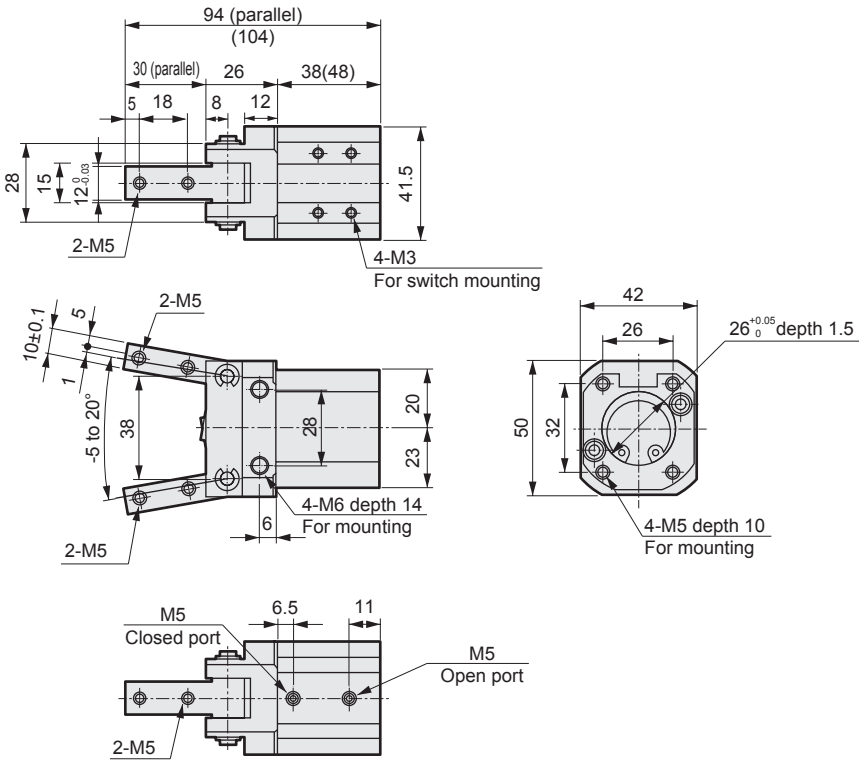

● With switch

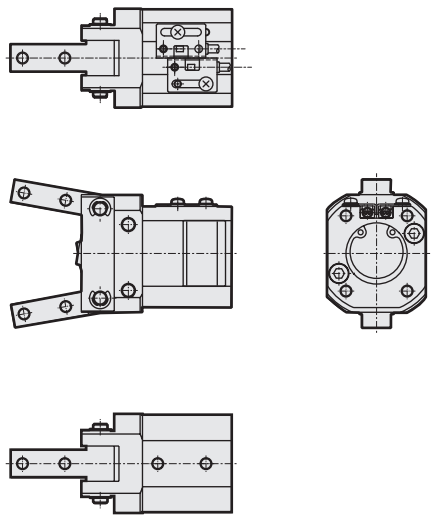

● HBL-4CS Standard/O/C

● Dimensions in ( ) are for C [normally closed] specifications.

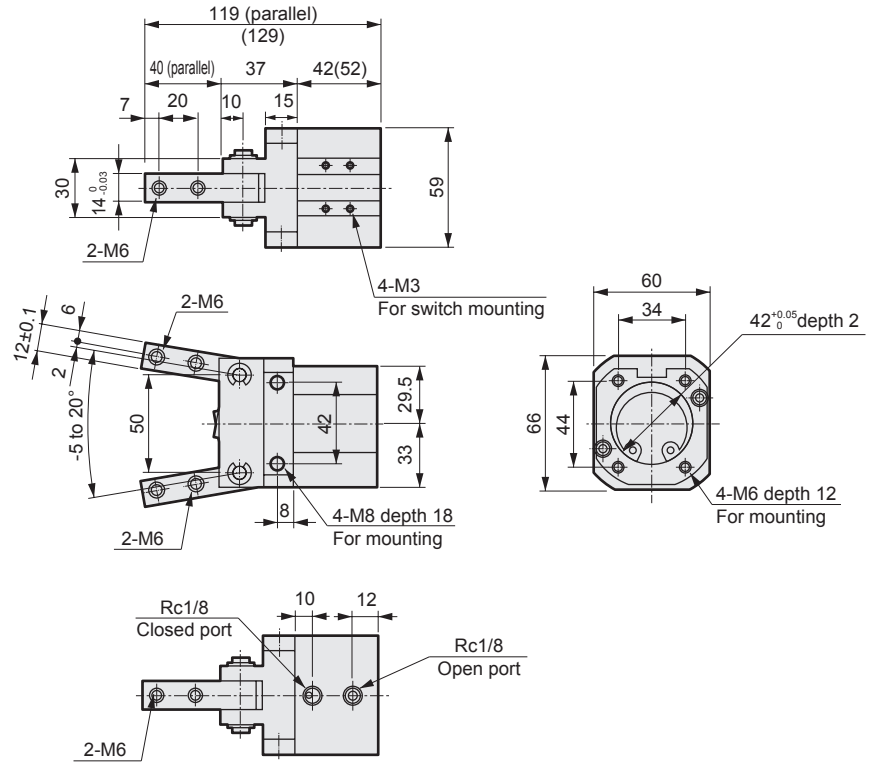

● With switch

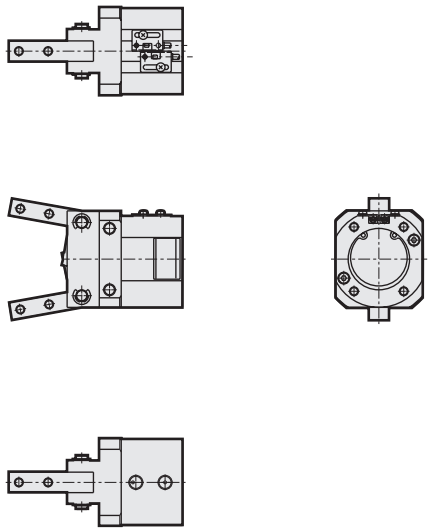

MEMO

Toggle hand

HJL Series

Double acting

RoHS CAD

Specifications

Item		HJL			
Size		32CS	40CS	50CS	63CS
Bore size	mm	ø32	ø40	ø50	ø63
Working fluid		Compressed air			
Max. working pressure	MPa	0.7 (≈100 psi, 7 bar)			
Min. working pressure	MPa	0.3 (≈44 psi, 3 bar)			
Ambient temperature	°C	5 (41°F) to 60 (140°F)			
Port size		M5	Rc1/8		
Open and close angle	°	-3 to 28			
Rod diameter	mm	ø14	ø16	ø20	ø20
Volumetric capacity (reciprocating)	cm^3	21.9	37.0	72.3	118.4
Repeatability	mm	±0.1			
Weight	kg	0.88	1.24	2.11	3.00
Lubrication		Not required (use turbine oil class 1 ISO VG32 if necessary for lubrication)			

Switch specifications

Item	Proximity 2-wire	Proximity 3-wire
	T2H/V	T3H/V
Applications	Dedicated for programmable controller	For programmable controller, relay
Output method	-	NPN output
Power supply voltage	-	10 to 28 VDC
Load voltage/current	10 to 30 VDC, 5 to 20 mA (*1)	30 VDC or less, 100 mA or less
Indicator lamp	LED (Lit when ON)	
Leakage current	1 mA or less	10 μA or less
Weight	1 m:18 g 3 m:49 g 5 m:80 g *3	

*1 : The above max. load current is 20 mA at 25°C.
The current is lower than 20 mA if the operating ambient temperature around the switch is higher than 25˚C. (5 to 10 mA at 60˚C)
*2 : Refer to Ending Page 1 for detailed switch specifications and dimensions.
*3 : The weight of switch mounting bracket is 1.5 g.

How to order

Without switch (built-in magnet for switch)

HJL - 40CS

With switch (built-in magnet for switch)

HJL - 40CS - T2H - R

Ⓐ Size

Ⓑ Switch model No.
* indicates the lead wire length.

Ⓒ Switch quantity

Code	Description
Ⓐ Size	
32CS	
40CS	
50CS	
63CS	

Ⓑ Switch model No.

Axial lead wire	Radial lead wire	Contact	Voltage AC	Voltage DC	Display	Lead wire
T2H*	T2V*	Prox.		●	1-color display	2-wire
T3H*	T3V*			●		3-wire

*** Lead wire length**	
Blank	1 m (standard)
3	3 m (option)
5	5 m (option)

Ⓒ Switch quantity	
R	1 on open side
H	1 on closed side
D	2

[Example of model No.]

HJL-40CS-T2H-R

Model : Toggle hand

Ⓐ Size :12CS
Ⓑ Switch model No.: Proximity T2H switch, lead wire 1 m
Ⓒ Switch quantity : 1 on open side

How to order switch

● For switch T*H*

· Switch body + mounting bracket set

HJL – T2H

Switch model No.
(Item Ⓑabove)

· Switch body only

SW – T2H

Switch model No.
(Item Ⓑabove)

·Mounting bracket set

HJL - T

Mounting bracket

● For switch T*V*

· Switch body + mounting bracket set

HJL – T2V – *

Switch model No.
(Item Ⓑabove)

· Switch body only

SW – T2V

Switch model No.
(Item Ⓑabove)

·Mounting bracket set

HJL - TV – *

· Select either R (open side) or H (closed side) for sections marked with an asterisk (*).
· HJL-[50CS, 63CS] can be mounted without a mounting bracket.

LCM
LCR
LCG
LCW
LCX
STM
STG
STS/STL
STR2
UCA2
ULK*
JSK/M2
JSG
JSC3/JSC4
USSD
UFCD
USC
UB
JSB3
LMB
LML
HCM
HCA
LBC
CAC4
UCAC2
CAC-N
UCAC-N
RCS2
RCC2
PCC
SHC
MCP
GLC
MFC
BBS
RRC
GRC
RV3*
NHS
HRL
LN
Hand
Chuk
MecHnd/Chuk
ShkAbs
FJ
FK
SpdContr
Ending
LSH-HP
LSH
FH100
BSA2
BHA/BHG
LHA
LHAG
HAP
HKP
HCP
HGP
HLF2
HLA/HLB
HLAG/HLBG
HLC
HLD
HMF
HMF-G
HMFB
HFP
FH500
HBL
HJL
HMD
HDL
HJD
BHE

Internal structure and parts list

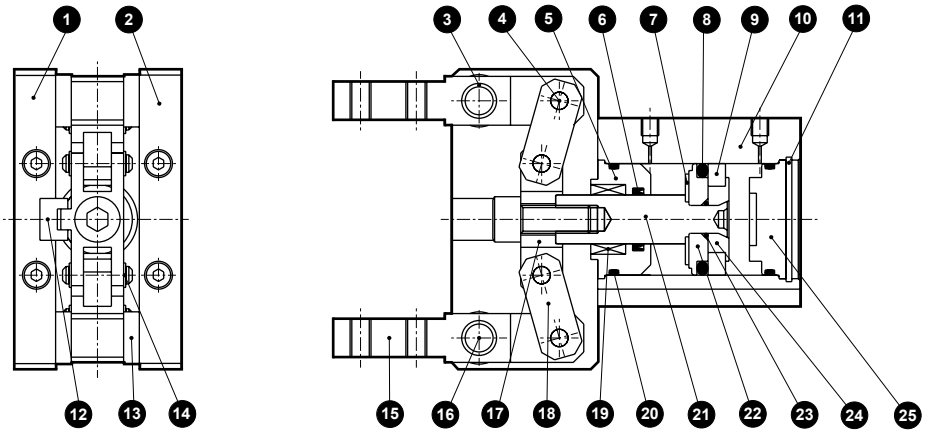

Cannot be disassembled

Parts list

No.	Part name	Material	Remarks	No.	Part name	Material	Remarks
1	Body B	Aluminum alloy		14	E type snap ring	Carbon steel	
2	Body A	Aluminum alloy		15	Finger	Carbon steel	
3	DU dry bearing	Sintering oil impregnated alloy		16	Fulcrum axis	Carbon steel	
4	Operation axis	Carbon steel		17	Operation plate	Carbon steel	
5	Rod cover	Aluminum alloy		18	Link	Carbon steel	
6	Rod sealant	Nitrile rubber		19	Die slide bush	Copper alloy casting	
7	Cushion	Urethane rubber		20	Cylinder sealant	Nitrile rubber	
8	Piston seal	Nitrile rubber		21	Piston rod	Stainless steel	
9	Magnet			22	Piston A	Aluminum alloy	
10	Cylinder	Aluminum alloy		23	O-ring	Nitrile rubber	
11	C type snap ring	Stainless steel		24	Piston B	Aluminum alloy	
12	Guide rail	Carbon steel		25	Cylinder guard	Aluminum alloy	
13	Collar	Carbon steel					

Gripping power performance data

- Gripping power represents the thrust (per one finger) in the arrow direction shown in the figure.
- The gripping power with finger length L of hand and a supply pressure of 0.3, 0.5 and 0.7 MPa is shown.
  ·Closed direction (➡) ———— (shown with continuous line)

[Parallel]

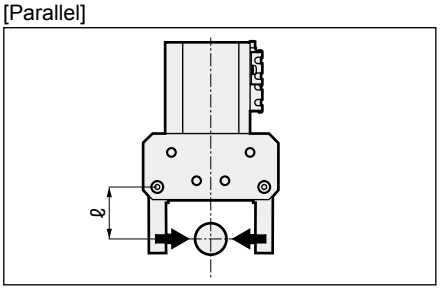

[At 10°]

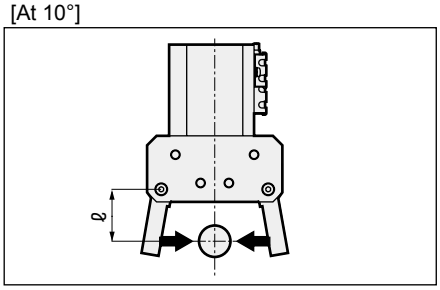

[At 20°]

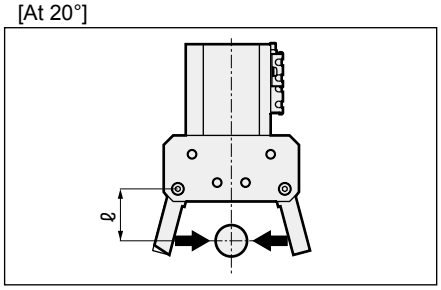

● HJL-32CS

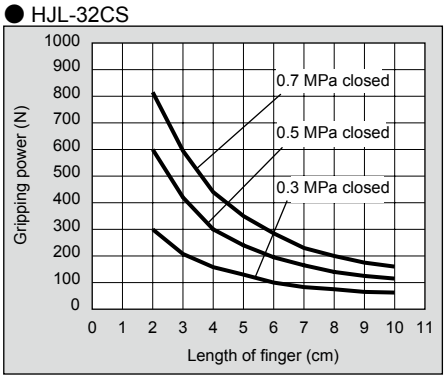

● HJL-32CS

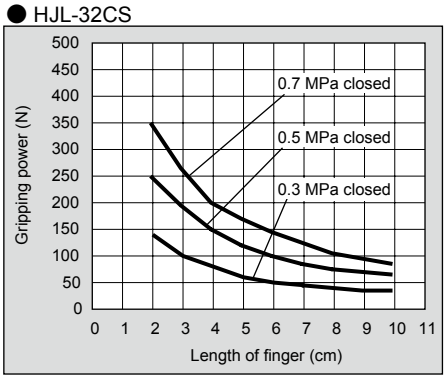

● HJL-32CS

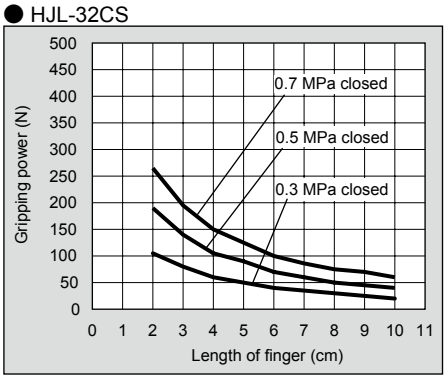

● HJL-40CS

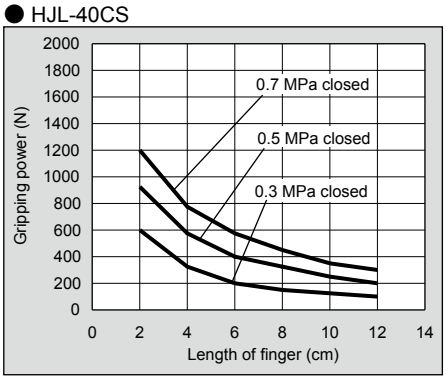

● HJL-40CS

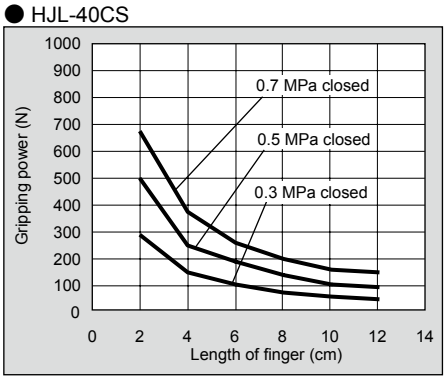

● HJL-40CS

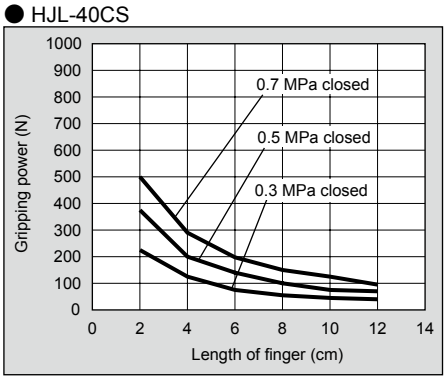

● HJL-50CS

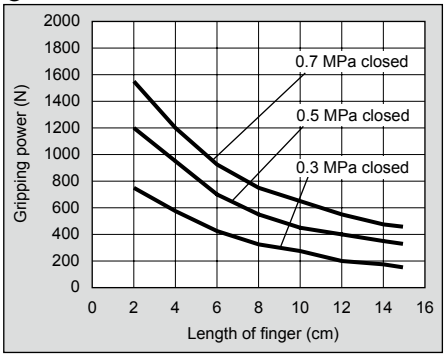

● HJL-50CS

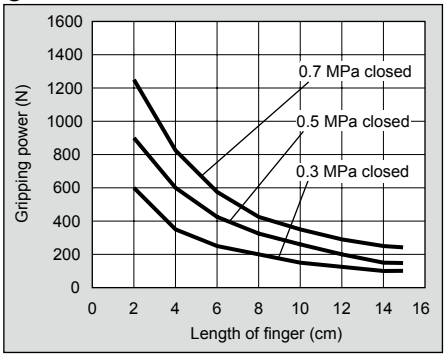

● HJL-50CS

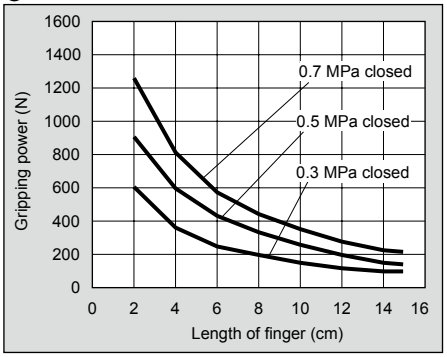

● HJL-63CS

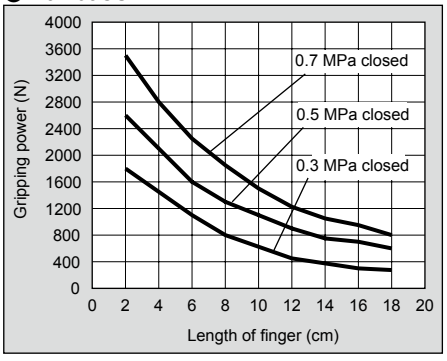

● HJL-63CS

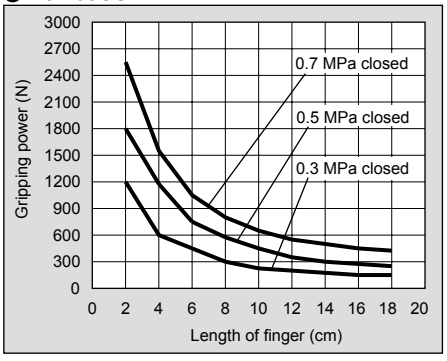

● HJL-63CS

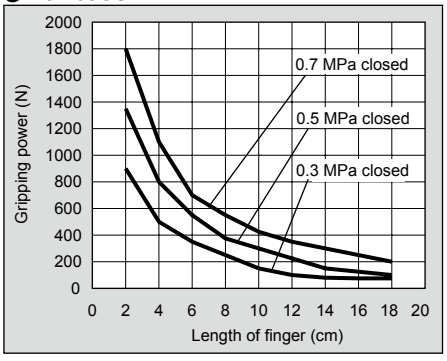

(Note) When making a selection, read the precautions for design and selection on page 1764.

LCM
LCR
LCG
LCW
LCX
STM
STG
STS/STL
STR2
UCA2
ULK*
JSK/M2
JSG
JSC3/JSC4
USSD
UFCD
USC
UB
JSB3
LMB
LML
HCM
HCA
LBC
CAC4
UCAC2
CAC-N
UCAC-N
RCS2
RCC2
PCC
SHC
MCP
GLC
MFC
BBS
RRC
GRC
RV3*
NHS
HRL
LN
Hand
Chuk
MecHnd/Chuk
ShkAbs
FJ
FK
SpdContr
Ending
LSH-HP
LSH
FH100
BSA2
BHA/BHG
LHA
LHAG
HAP
HKP
HCP
HGP
HLF2
HLA/HLB
HLAG/HLBG
HLC
HLD
HMF
HMF-G
HMFB
HFP
FH500
HBL
HJL
HMD
HDL
HJD
BHE

Dimensions CAD

● HJL-32CS

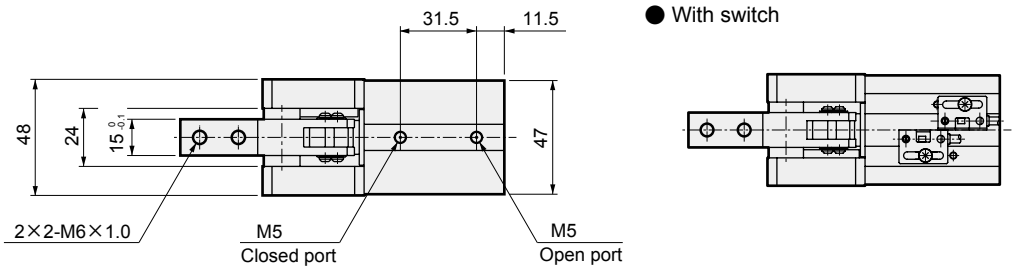

● With switch

A section arrow view

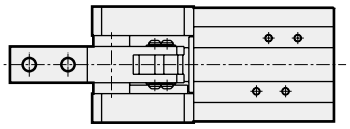

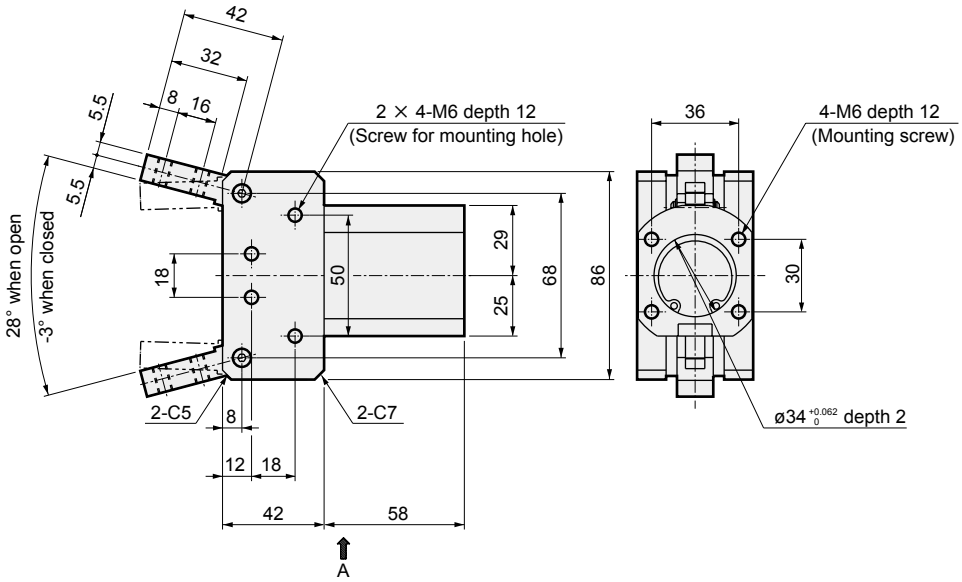

● HJL-40CS

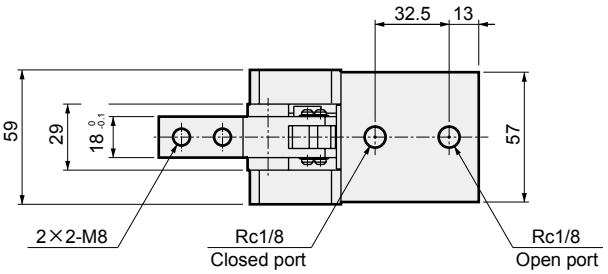

● With switch

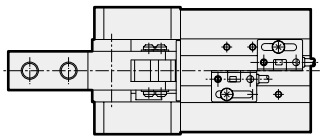

A section arrow view

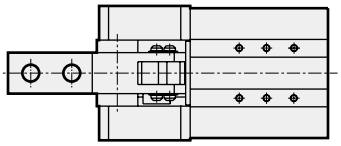

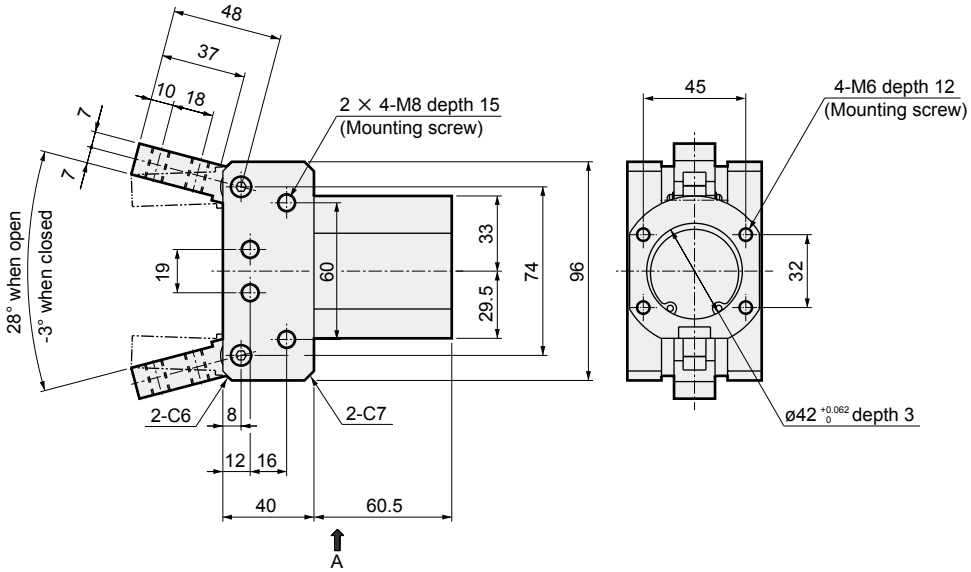

Dimensions

● HJL-50CS

● With switch

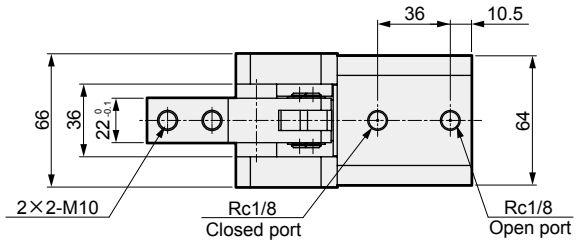

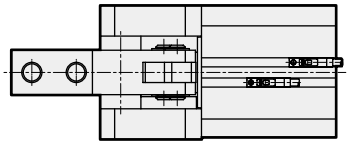

A section arrow view

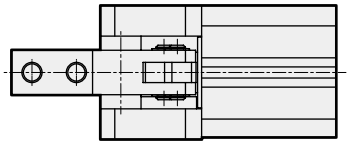

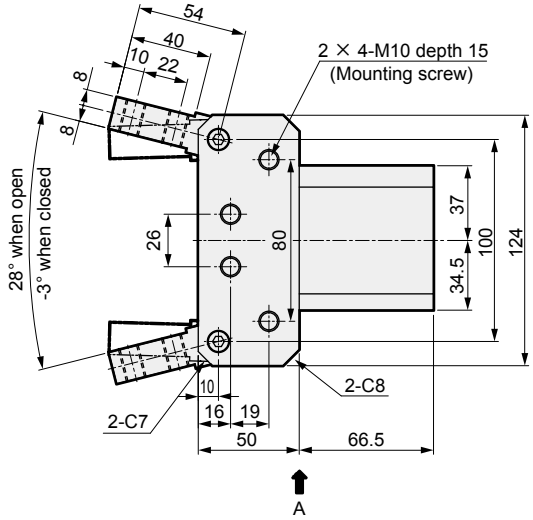

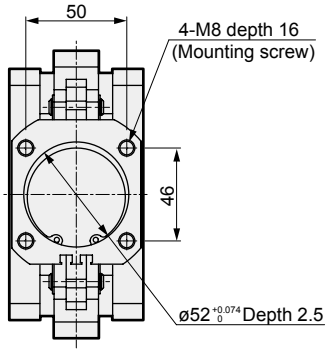

● HJL-63CS

● With switch

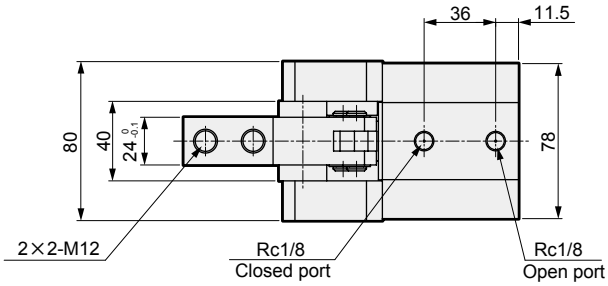

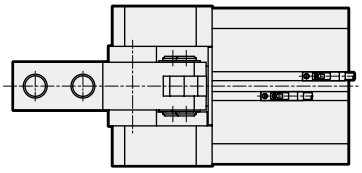

A section arrow view

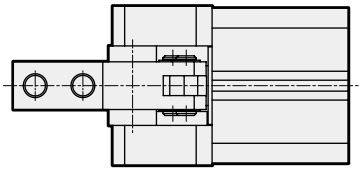

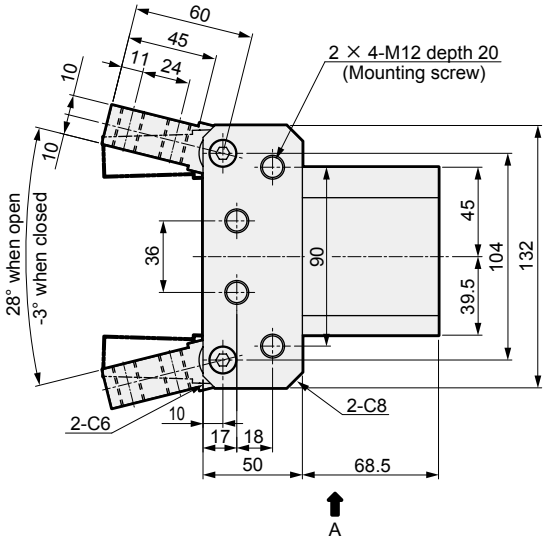

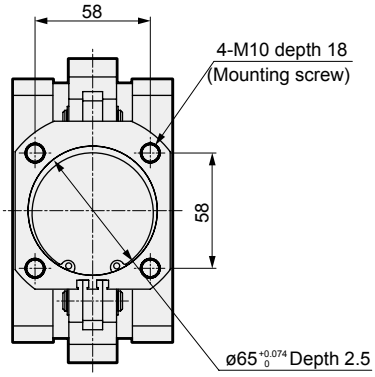

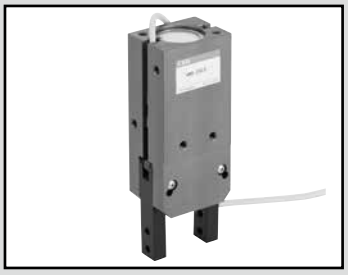

180 degree open/close thin wide angle hand

HMD Series

● Open/close angle: -4° to 184°

Double acting

RoHS CAD

Specifications

Item	HMD			
Size	12CS	16CS	20CS	25CS
Bore size mm	ø12	ø16	ø20	ø25
Actuation	Double acting			
Working fluid	Compressed air			
Max. working pressure MPa	0.7 (≈100 psi, 7 bar)			
Min. working pressure MPa	0.3 (≈44 psi, 3 bar)			
Ambient temperature °C	5 (41°F) to 60 (140°F)			
Port size	M3		M5	
Open and close angle °	-4 to 184			
Rod diameter mm	ø6		ø8	
Volumetric capacity (reciprocating) cm^3	2.3	5.8	8.7	19.4
Repeatability mm	±0.2			
Weight kg	0.074	0.13	0.26	0.38
Lubrication	Not required (use turbine oil class 1 ISO VG32 if necessary for lubrication)			

Switch specifications

Item	Proximity 2-wire	Proximity 3-wire
	T2H/V	T3H/V
Applications	Dedicated for programmable controller	For programmable controller, relay
Output method	-	NPN output
Power supply voltage	-	10 to 28 VDC
Load voltage/current	10 to 30 VDC, 5 to 20 mA (*1)	30 VDC or less, 100 mA or less
Indicator lamp	LED (Lit when ON)	
Leakage current	1 mA or less	10 μA or less
Weight	1 m:18 g 3 m:49 g 5 m:80 g	

*1 : The above max. load current is 20 mA at 25°C.
The current is lower than 20 mA if the operating ambient temperature around the switch is higher than 25˚C. (5 to 10 mA at 60˚C)

*2 : Refer to Ending Page 1 for detailed switch specifications and dimensions.

How to order

Without switch (built-in magnet for switch)

HMD - 16CS

With switch (built-in magnet for switch)

HMD - 16CS - T2H - R

Model No.

Ⓐ Size

Ⓑ Switch model No.

* indicates the lead wire length.

Ⓒ Switch quantity

Code	Description
Ⓐ Size	
12CS	
16CS	
20CS	
25CS	

Ⓑ Switch model No.

Axial lead wire	Radial lead wire	Contact	Voltage AC	Voltage DC	Display	Lead wire
T2H*	T2V*	Proximity		●	1-color display	2-wire
T3H*	T3V*			●		3-wire

* Lead wire length	
Blank	1 m (standard)
3	3 m (option)
5	5 m (option)

Ⓒ Switch quantity	
R	1 on open side
H	1 on closed side
D	2

[Example of model No.]

HMD-16CS-T2H-R

Model : Thin wide angle hand

Ⓐ Size : 16CS

Ⓑ Switch model No. : Proximity T2H switch, lead wire 1 m

Ⓒ Switch quantity : 1 on open side

How to order switch

SW - T2H*

Switch model No.
(Item Ⓑ above)

Specifications for rechargeable battery (Catalog No. CC-1226A)

HMD - … - P4*

● Design compatible with rechargeable battery manufacturing process.

* Contact CKD for details.

Internal structure and parts list

● HMD-12CS to 25CS

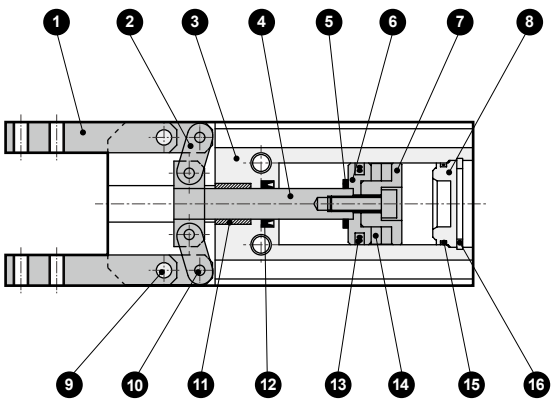

Cannot be disassembled

No.	Part name	Material	Remarks
1	Finger	Steel	
2	Link	Steel	
3	Body	Aluminum alloy	
4	Piston A	Stainless steel	
5	Cushion	Urethane rubber	
6	Piston B	Copper alloy	
7	Piston C	Copper alloy	
8	Cylinder guard	Acetal resin	
9	Fulcrum axis	Alloy steel	
10	Operation shaft	Alloy steel	
11	Bush	Sintering oil impregnated alloy	
12	Rod sealant	Nitrile rubber	
13	Piston seal	Nitrile rubber	
14	Magnet		
15	Cylinder sealant	Nitrile rubber	
16	Snap ring	Stainless steel	

LCM
LCR
LCG
LCW
LCX
STM
STG
STS/STL
STR2
UCA2
ULK*
JSK/M2
JSG
JSC3/JSC4
USSD
UFCD
USC
UB
JSB3
LMB
LML
HCM
HCA
LBC
CAC4
UCAC2
CAC-N
UCAC-N
RCS2
RCC2
PCC
SHC
MCP
GLC
MFC
BBS
RRC
GRC
RV3*
NHS
HRL
LN
Hand
Chuk
MecHnd/Chuk
ShkAbs
FJ
FK
SpdContr
Ending
LSH-HP
LSH
FH100
BSA2
BHA/BHG
LHA
LHAG
HAP
HKP
HCP
HGP
HLF2
HLA/HLB
HLAG/HLBG
HLC
HLD
HMF
HMF-G
HMFB
HFP
FH500
HBL
HJL
HMD
HDL
HJD
BHE

Gripping power performance data

- Gripping power represents the thrust (per one finger) in the arrow direction shown in the figure.
- The gripping power with finger length L of hand and a supply pressure of 0.3, 0.5 and 0.7 MPa is shown.

·Closed direction (➡) ———————— (shown with continuous line)

(Note) When making a selection, read the precautions for design and selection on page 1764.

[Parallel] [10°] [20°]

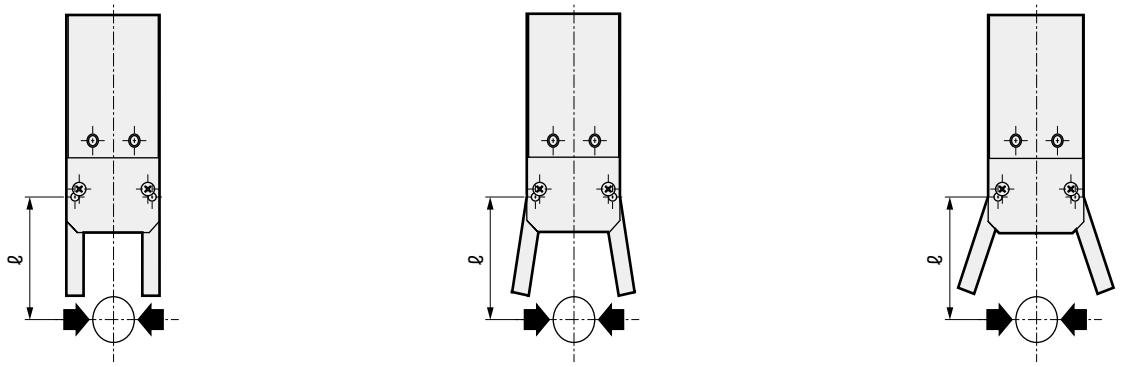

● HMD-12CS

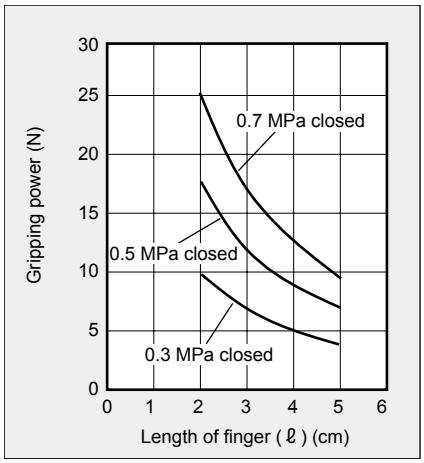

● HMD-12CS

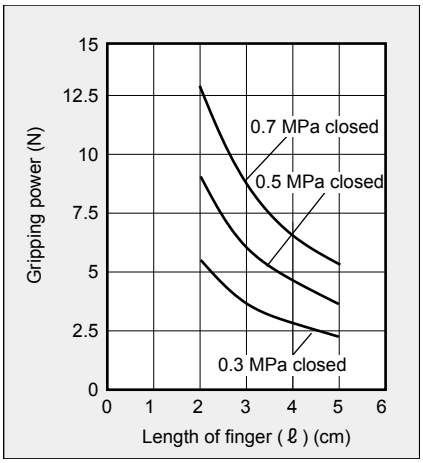

● HMD-12CS

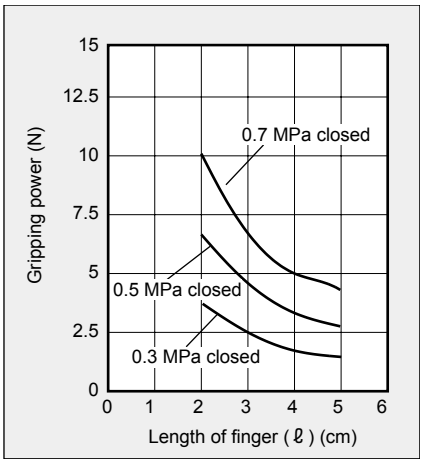

● HMD-16CS

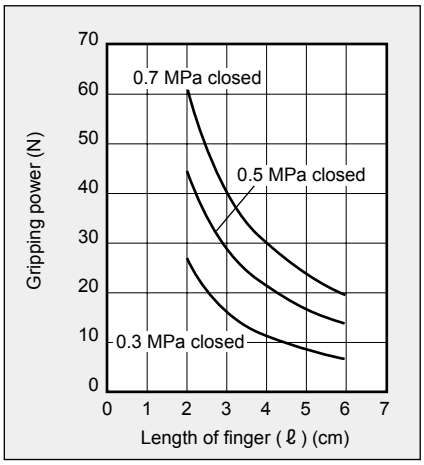

● HMD-16CS

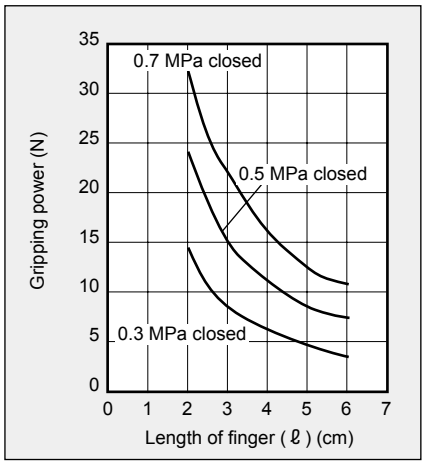

● HMD-16CS

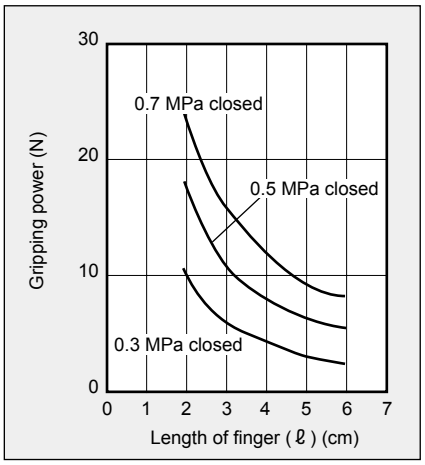

Gripping power performance data

[Parallel]

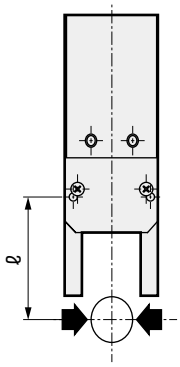

[10°]

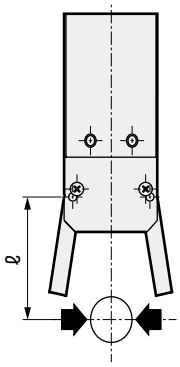

[20°]

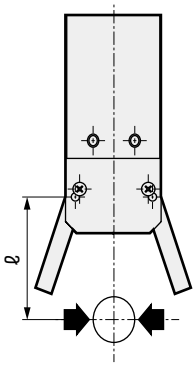

● HMD-20CS

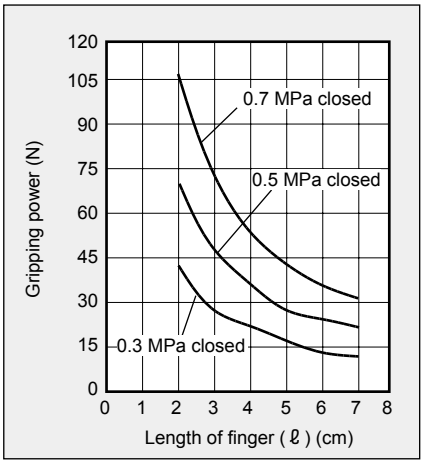

● HMD-20CS

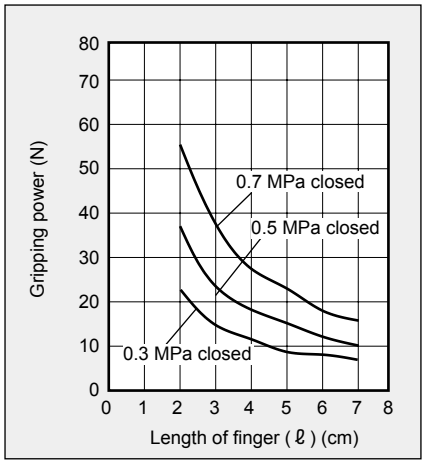

● HMD-20CS

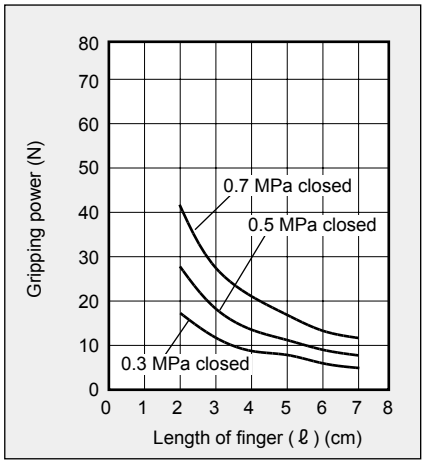

● HMD-25CS

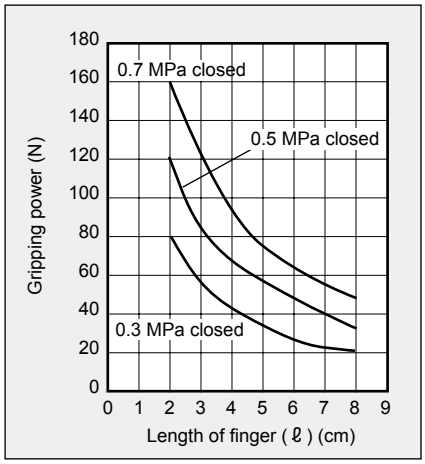

● HMD-25CS

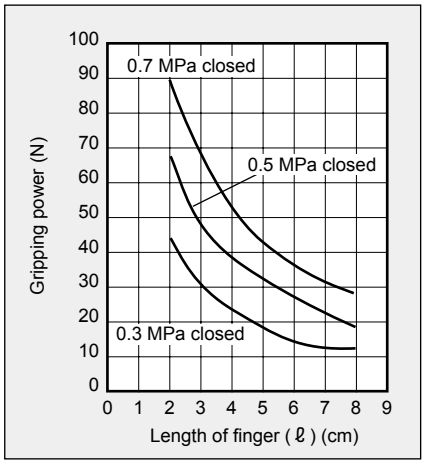

● HMD-25CS

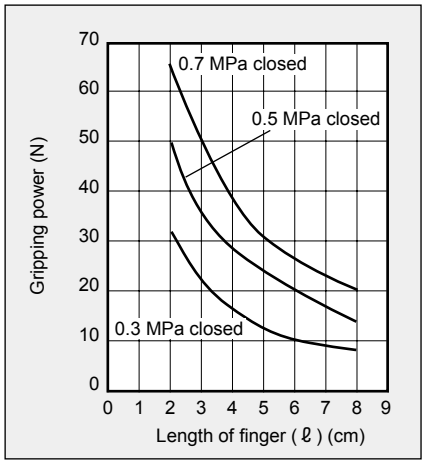

LCM
LCR
LCG
LCW
LCX
STM
STG
STS/STL
STR2
UCA2
ULK*
JSK/M2
JSG
JSC3/JSC4
USSD
UFCD
USC
UB
JSB3
LMB
LML
HCM
HCA
LBC
CAC4
UCAC2
CAC-N
UCAC-N
RCS2
RCC2
PCC
SHC
MCP
GLC
MFC
BBS
RRC
GRC
RV3*
NHS
HRL
LN
Hand
Chuk
MecHnd/Chuk
ShkAbs
FJ
FK
SpdContr
Ending
LSH-HP
LSH
FH100
BSA2
BHA/BHG
LHA
LHAG
HAP
HKP
HCP
HGP
HLF2
HLA/HLB
HLAG/HLBG
HLC
HLD
HMF
HMF-G
HMFB
HFP
FH500
HBL
HJL
HMD
HDL
HJD
BHE

Dimensions CAD

● HMD-12CS

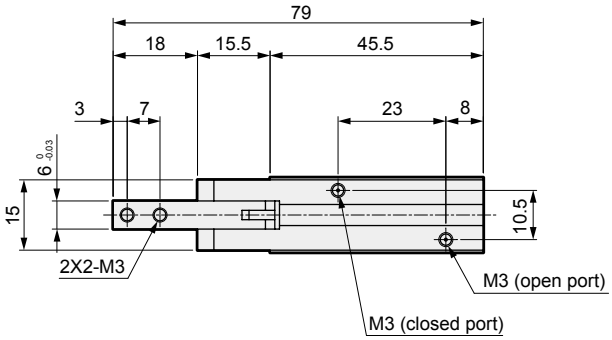

● With switch

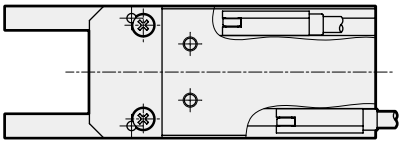

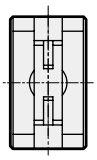

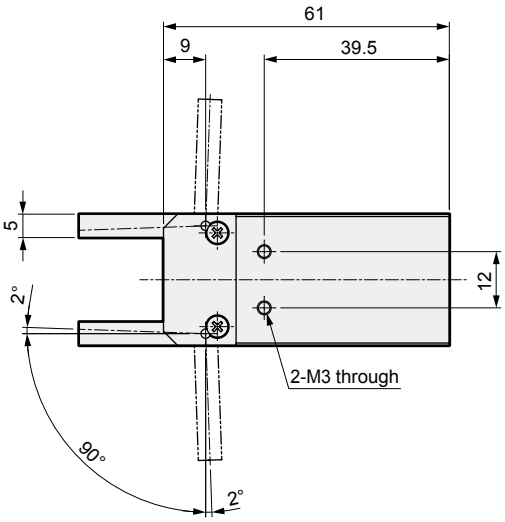

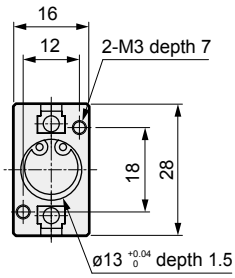

● HMD-16CS

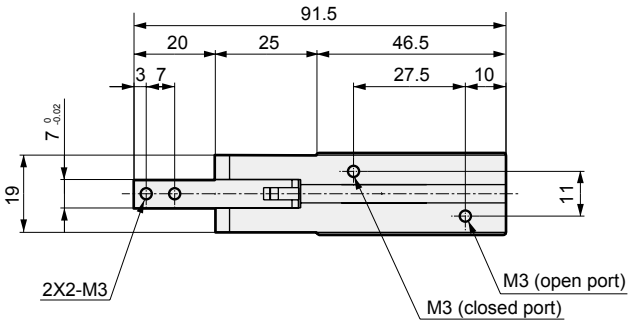

● With switch

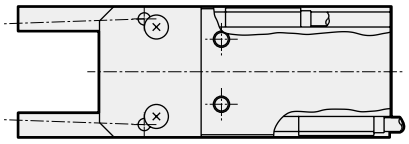

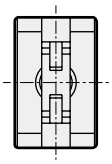

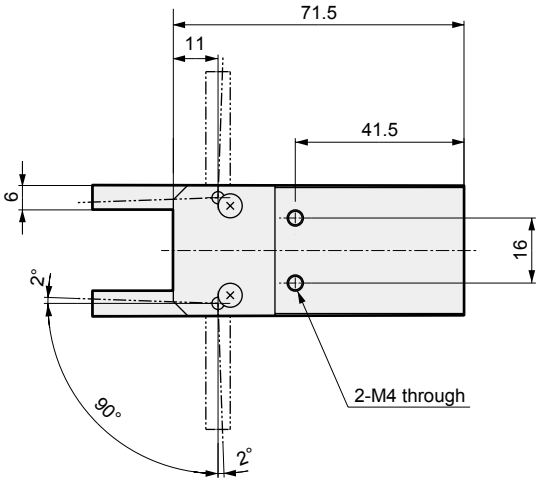

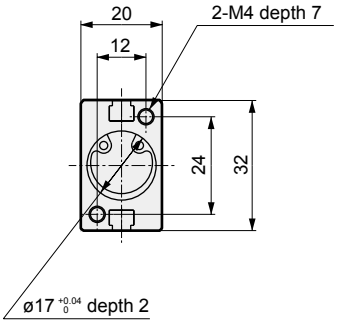

Dimensions

● HMD-20CS

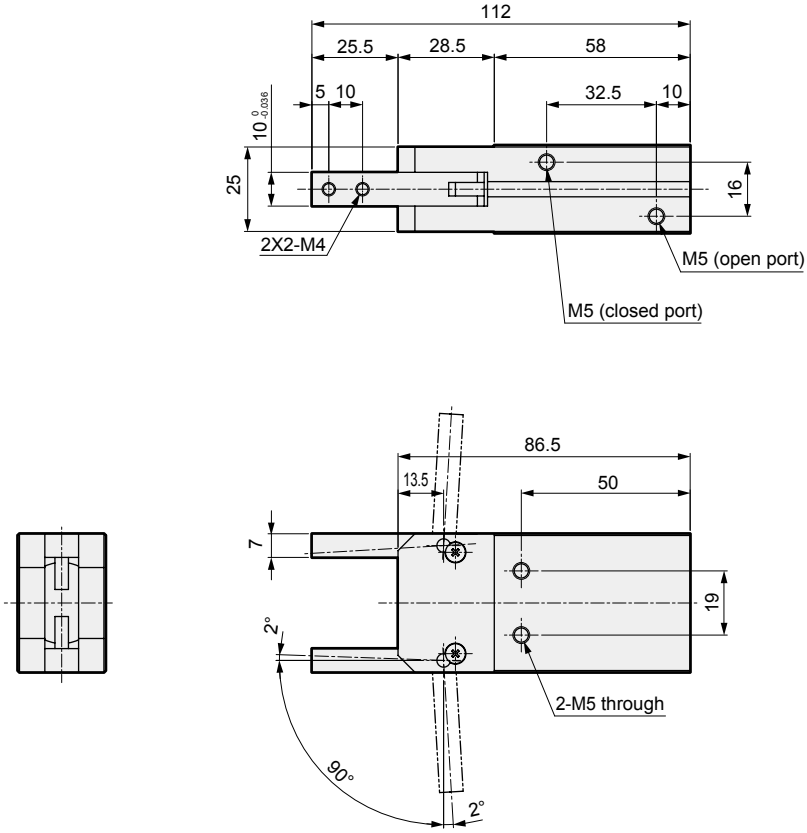

● With switch

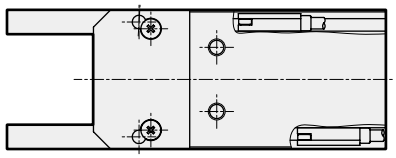

● HMD-25CS

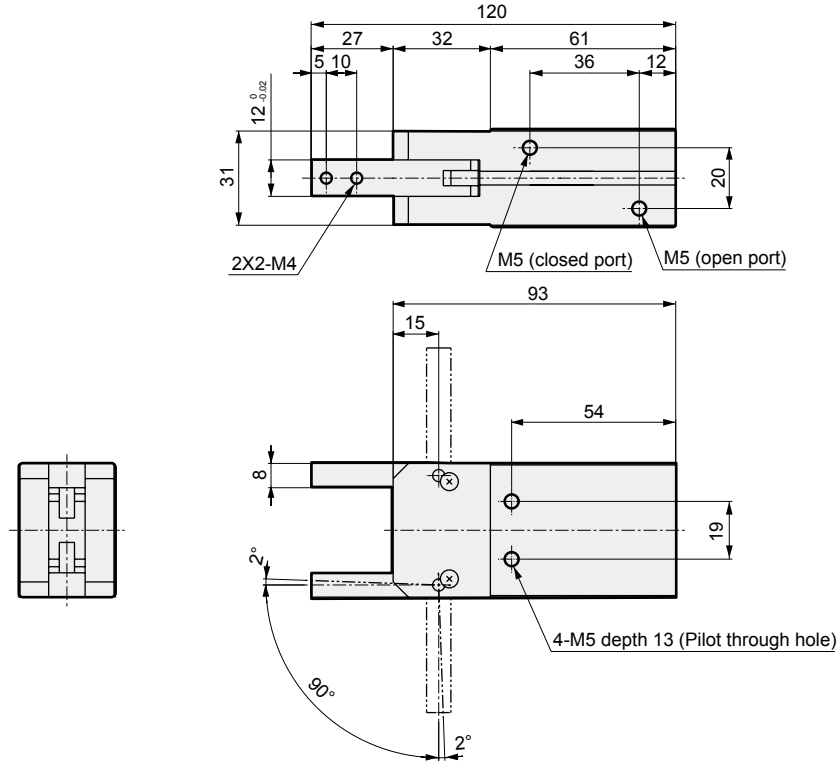

● With switch

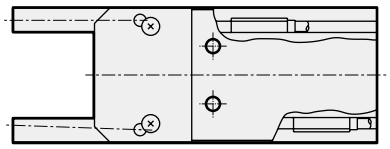

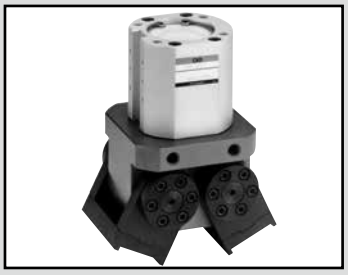

180 degree open/close wide angle hand Double acting/single acting

HDL Series

● Open/close angle: 0° to 180°

Double acting

Single acting (normally open)

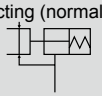

Single acting (normally closed)

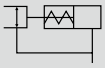

RoHS CAD

Specifications

Item		HDL	
Size		3CS	4CS
Bore size	mm	ø25	ø40
Actuation		Double acting/single acting	
Working fluid		Compressed air	
Max. working pressure	MPa	0.7 (≈100 psi, 7 bar)	
Min. working pressure	MPa	0.3 (≈44 psi, 3 bar)	
Ambient temperature	°C	5 (41°F) to 60 (140°F)	
Port size		M5	Rc1/8
Open and close angle	°	0 to 180	
Rod diameter	mm	ø14	ø16
Volumetric capacity (reciprocating)	cm^3	7.8	53.2
Repeatability	mm	±0.2	±0.1
Weight	kg	0.6	2.40
Lubrication		Not required (use turbine oil class 1 ISO VG32 if necessary for lubrication)	

Switch specifications

Item	Proximity 2-wire	Proximity 3-wire
	T2H/V	T3H/V
Applications	Dedicated for programmable controller	For programmable controller, relay
Output method	-	NPN output
Power supply voltage	-	10 to 28 VDC
Load voltage/current	10 to 30 VDC, 5 to 20 mA (*1)	30 VDC or less, 100 mA or less
Indicator lamp	LED (Lit when ON)	
Leakage current	1 mA or less	10 μA or less
Weight	1 m:18 g 3 m:49 g 5 m:80 g *3	

*1 : The above max. load current is 20 mA at 25°C.
The current is lower than 20 mA if the operating ambient temperature around the switch is higher than 25˚C. (5 to 10 mA at 60˚C)
*2 : Refer to Ending Page 1 for detailed switch specifications and dimensions.
*3 : The weight of switch mounting bracket is 1.5 g.

How to order

Without switch (built-in magnet for switch)

HDL - 3CS - O

With switch (built-in magnet for switch)

HDL - 3CS - O - T2H - R

Ⓐ Size

Ⓑ Option

Ⓒ Switch model No.
* indicates the lead wire length.

Ⓓ Switch quantity

Code	Description
Ⓐ Size	
3CS	
4CS	
Ⓑ Option	
Blank	Standard (double acting)
O	Single acting (normally open)
C	Single acting (normally closed)

Ⓒ Switch model No.

Axial lead wire	Radial lead wire	Contact	Voltage AC	Voltage DC	Display	Lead wire
T2H*	T2V*	Proximity		●	1-color display	2-wire
T3H*	T3V*			●		3-wire

* Lead wire length	
Blank	1 m (standard)
3	3 m (option)
5	5 m (option)

Ⓓ Switch quantity	
R	1 on open side
H	1 on closed side
D	2

[Example of model No.]

HDL-3CS-O-T2H-R

Model : 180 degree open/close wide angle hand

Ⓐ Size : 3CS
Ⓑ Option : Single acting, normally open
Ⓒ Switch model No. : Proximity T2H switch, lead wire 1 m
Ⓓ Switch quantity : 1 on open side

How to order switch

● For switch T*H*

· Switch body + mounting bracket set

HDL - T2H

Switch model No.
(Item Ⓒ above)

· Switch body

SW - T2H

Switch model No.
(Item Ⓒ above)

· Mounting bracket set

HDL - T

● For switch T*V*

· Switch body + mounting bracket set

HDL - T2V - *

Switch model No.
(Item Ⓒ above)

· Switch body

SW - T2V

Switch model No.
(Item Ⓒ above)

· Mounting bracket set

HDL - TV - *

(Select either R (open side) or H (closed side) for sections marked with an asterisk (*).)

LCM
LCR
LCG
LCW
LCX
STM
STG
STS/STL
STR2
UCA2
ULK*
JSK/M2
JSG
JSC3/JSC4
USSD
UFCD
USC
UB
JSB3
LMB
LML
HCM
HCA
LBC
CAC4
UCAC2
CAC-N
UCAC-N
RCS2
RCC2
PCC
SHC
MCP
GLC
MFC
BBS
RRC
GRC
RV3*
NHS
HRL
LN
Hand
Chuk
MecHnd/Chuk
ShkAbs
FJ
FK
SpdContr
Ending
LSH-HP
LSH
FH100
BSA2
BHA/BHG
LHA
LHAG
HAP
HKP
HCP
HGP
HLF2
HLA/HLB
HLAG/HLBG
HLC
HLD
HMF
HMF-G
HMFB
HFP
FH500
HBL
HJL
HMD
HDL
HJD
BHE

Internal structure and parts list

● Standard (double acting)/O (normally open)

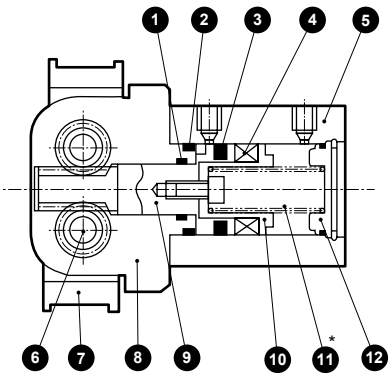

● C (normally closed)

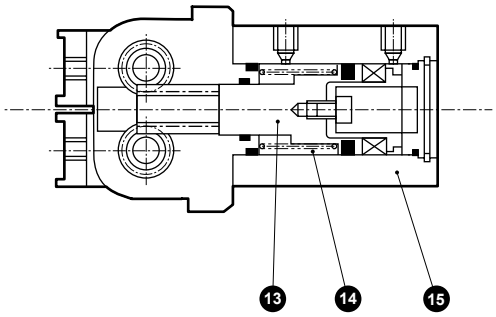

Cannot be disassembled

* Standard (double acting) does not contain ⓫ spring.

No.	Part name	Material	Remarks	No.	Part name	Material	Remarks
1	Rod packing	Nitrile rubber		9	Piston A	Stainless steel	
2	Cylinder gasket	Nitrile rubber		10	Piston B	Acetal resin	
3	Piston packing	Nitrile rubber		11	Spring	Stainless steel	O type only
4	Magnet			12	Cylinder guard	Acetal resin	
5	Cylinder	Aluminum alloy		13	Piston	Stainless steel	
6	Pinion gear	Steel		14	Spring	Stainless steel	
7	Finger	Steel		15	Cylinder	Aluminum alloy	
8	Body	Aluminum alloy					

Gripping power performance data

- Gripping power represents the thrust (per one finger) in the arrow direction shown in the figure.
- The gripping power in the opening/closing directions with finger length L of hand with a supply pressure of 0.3, 0.5 and 0.7 MPa is shown.

● Open direction (⇦) - - - (shown with broken line)
● Closed direction (➡) —— (shown with continuous line)

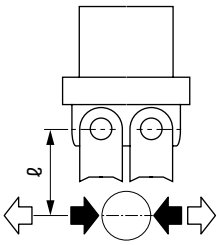

● HDL-3CS

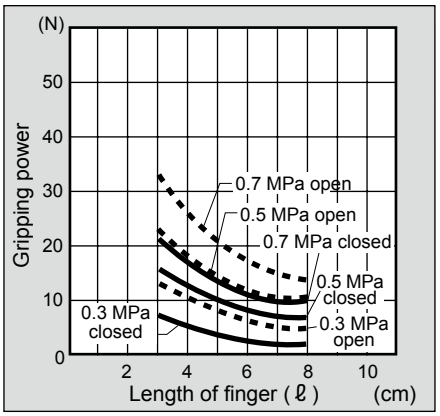

● HDL-4CS

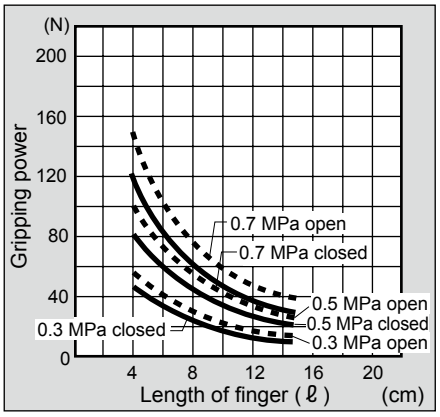

(Note) O type gripping power decreases approximately 20 to 30% in the closed direction compared to double acting.
C type gripping power decreases approximately 10 to 20% in the open direction compared to the double acting.
When making a selection, read the precautions for design and selection on page 1764.

Dimensions

● HDL-3CS Standard/O/C

● Dimensions in ( ) are for C [normally closed] specifications.

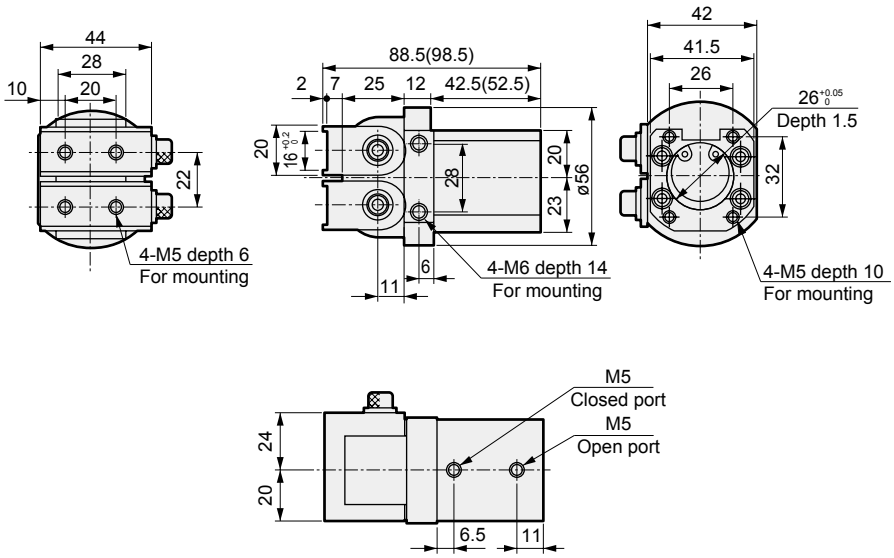

● With switch

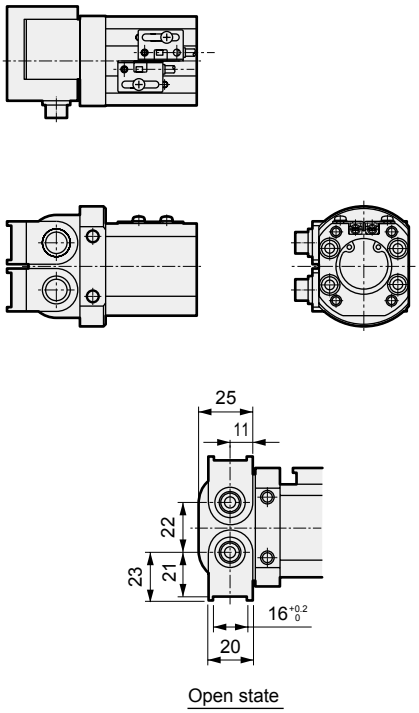

● HDL-4CS Standard/O/C

● Dimensions in ( ) are for C [normally closed] specifications.

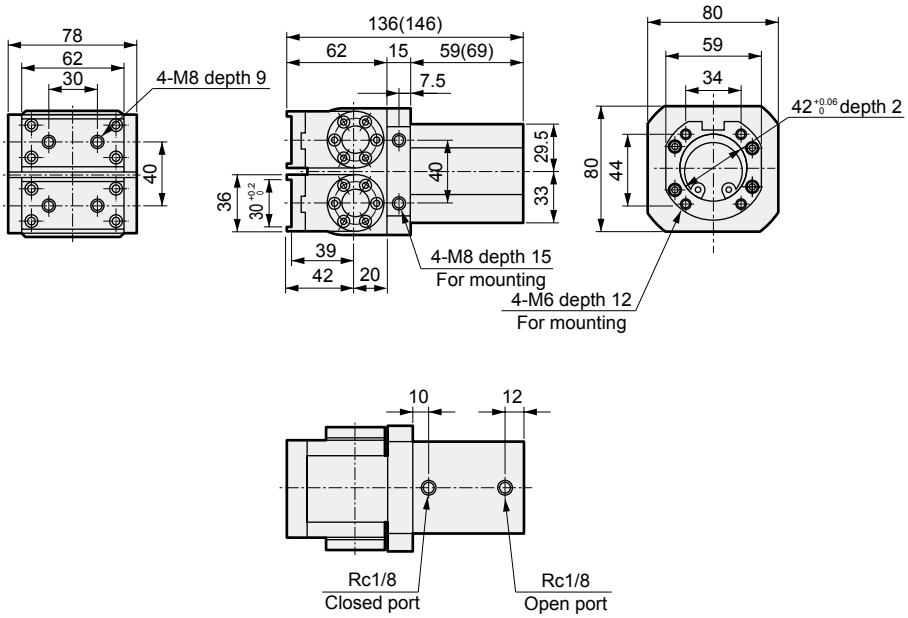

● With switch

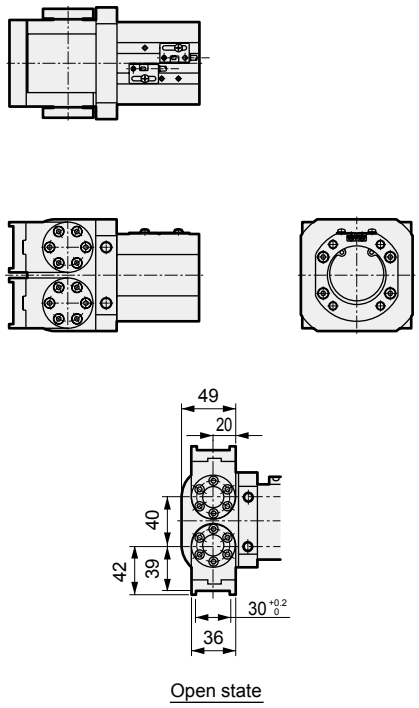

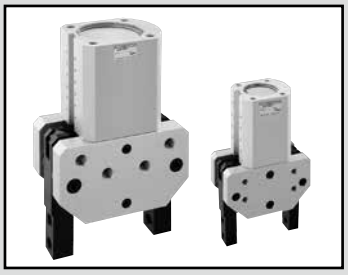

180 degree open/close high gripping wide angle hand

HJD Series

● Open/close angle: -4° to 184°

RoHS CAD

Specifications

Model No.		HJD			
Size		32CS	40CS	50CS	63CS
Bore size	mm	ø32	ø40	ø50	ø63
Working fluid		Compressed air			
Max. working pressure	MPa	0.7 (≈100 psi, 7 bar)			
Min. working pressure	MPa	0.3 (≈44 psi, 3 bar)			
Ambient temperature	°C	5 (41°F) to 60 (140°F)			
Port size		M5	Rc1/8		
Open and close angle	°	-4 to 184			
Rod diameter	mm	ø14	ø16	ø20	ø20
Volumetric capacity (reciprocating)	cm^3	46	88.7	180.8	331.5
Repeatability	mm	±0.1			
Weight	kg	1.03	1.58	2.67	3.97
Lubrication		Not required (use turbine oil class 1 ISO VG32 if necessary for lubrication)			

Switch specifications

Item	Proximity 2-wire		Proximity 3-wire	
	T2H/T2V	T2WH/T2WV (2-color display)	T3H/T3V	T3WH/T3WV (2-color display)
Applications	Dedicated for programmable controller		For programmable controller, relay	
Output method	-		NPN output	
Power supply voltage	-		10 to 28 VDC	
Load voltage	10 to 30 VDC	24 VDC ±10%	30 VDC or less	
Load current	5 to 20 mA		100 mA or less	50 mA or less
Indicator lamp	LED (Lit when ON)	Red/green LED (Lit when ON)	LED (Lit when ON)	Red/green LED (Lit when ON)
Leakage current	1 mA or less		10 μA or less	
Weight	1 m:18 g 3 m:49 g 5 m:80 g		1 m:18 g 3 m:49 g 5 m:80 g	

*1 : The above max. load current is 20 mA at 25°C.
The current is lower than 20 mA if the operating ambient temperature around the switch is higher than 25˚C. (5 to 10 mA at 60˚C)

*2 : Refer to Ending Page 1 for detailed switch specifications and dimensions.

How to order

Without switch (built-in magnet for switch)

HJD - 40CS

With switch (built-in magnet for switch)

HJD - 40CS - T2H - R

Ⓐ Size

Ⓑ Switch model No.

Ⓒ Switch quantity

Code	Description
Ⓐ Size	
32CS	
40CS	
50CS	
63CS	

Ⓑ Switch model No.

Axial lead wire	Radial lead wire	Contact	Voltage AC	Voltage DC	Display	Lead wire
T2H*	T2V*	Proximity		●	1-color display	2-wire
T3H*	T3V*			●		3-wire
T2WH*	T2WV*			●	2-color display	2-wire
T3WH*	T3WV*			●		3-wire

* Lead wire length	
Blank	1 m (standard)
3	3 m (option)
5	5 m (option)

Ⓒ Switch quantity	
R	1 on open side
H	1 on closed side
D	2

[Example of model No.]

HJD-40CS-T2H-R

Ⓐ Size : 40CS
Ⓑ Switch model No. : Proximity T2H switch, lead wire 1 m
Ⓒ Switch quantity : 1 on open side

How to order switch

● For switch T*H* or T*WH*

· Switch body + mounting bracket set

HJD - T2H

Switch model No.
(Item Ⓑ above)

· Switch body

SW - T2H

Switch model No.
(Item Ⓑ above)

·Mounting bracket set

HJD - T

● For switch T*V* or T*WV*

· Switch body + mounting bracket set

HJD - T2V - *

Switch model No.
(Item Ⓑ above)

· Switch body

SW - T2V

Switch model No.
(Item Ⓑ above)

·Mounting bracket set

HJD - TV - *

· Select either R (open side) or H (closed side) for sections marked with an asterisk (*).
· HJD (- 50CS, 63CS) can be mounted without a mounting bracket.

LCM
LCR
LCG
LCW
LCX
STM
STG
STS/STL
STR2
UCA2
ULK*
JSK/M2
JSG
JSC3/JSC4
USSD
UFCD
USC
UB
JSB3
LMB
LML
HCM
HCA
LBC
CAC4
UCAC2
CAC-N
UCAC-N
RCS2
RCC2
PCC
SHC
MCP
GLC
MFC
BBS
RRC
GRC
RV3*
NHS
HRL
LN
Hand
Chuk
MecHnd/Chuk
ShkAbs
FJ
FK
SpdContr
Ending
LSH-HP
LSH
FH100
BSA2
BHA/BHG
LHA
LHAG
HAP
HKP
HCP
HGP
HLF2
HLA/HLB
HLAG/HLBG
HLC
HLD
HMF
HMF-G
HMFB
HFP
FH500
HBL
HJL
HMD
HDL
HJD
BHE

Internal structure and parts list

● HJD-32CS

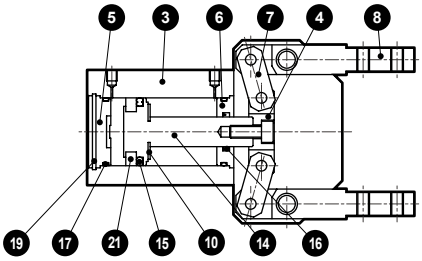

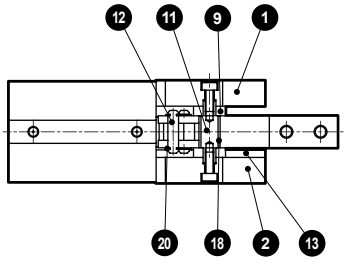

● HJD-40CS to 63CS

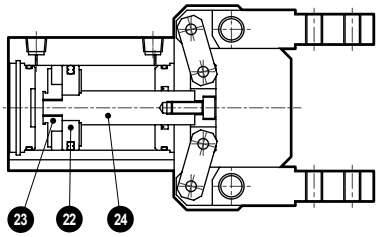

Cannot be disassembled

No.	Part name	Material	No.	Part name	Material	No.	Part name	Material
1	Body A	Aluminum alloy	9	Collar	Steel	17	Cylinder sealant	Nitrile rubber
2	Body B	Aluminum alloy	10	Cushion	Urethane rubber	18	Bush	Sintering oil impregnated alloy
3	Cylinder	Aluminum alloy	11	Fulcrum axis	Steel	19	C type snap ring	Stainless steel
4	Operation plate	Steel	12	Operation shaft	Steel	20	E type snap ring	Stainless steel
5	Cylinder guard	Aluminum alloy	13	Guide rail	Steel	21	Magnet	
6	Rod cover	Aluminum alloy	14	Piston	Aluminum alloy/stainless steel	22	Piston A	Aluminum alloy
7	Link	Steel	15	Piston seal	Nitrile rubber	23	Piston B	Stainless steel
8	Finger	Steel	16	Rod sealant	Nitrile rubber	24	Piston rod	Stainless steel

Gripping power performance data

- Gripping power represents the thrust (per one finger) in the arrow direction shown in the figure.
- The gripping power in the opening/closing directions with finger length L of hand with a supply pressure of 0.3, 0.5 and 0.7 MPa is shown.

● Closed direction (⇨)

(Note) When making a selection, read the precautions for design and selection on page 1764.

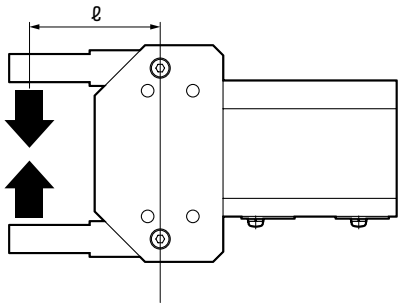

● HJD-32CS

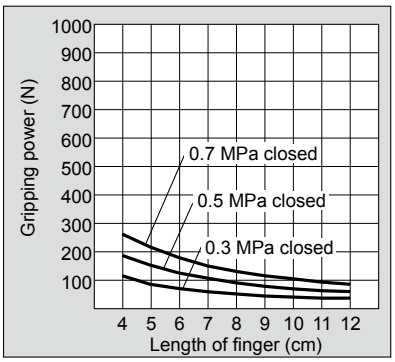

● HJD-40CS

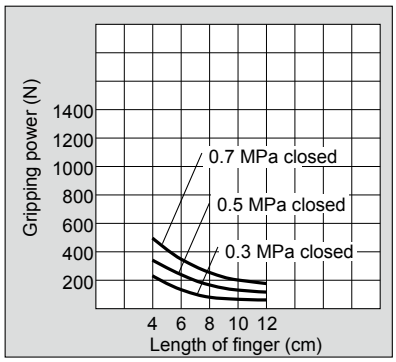

● HJD-50CS

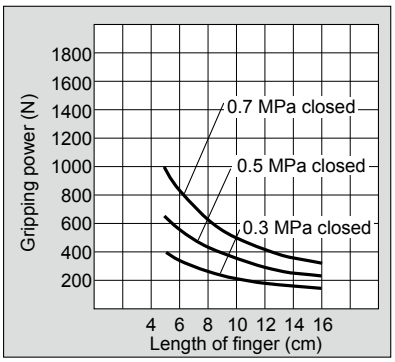

● HJD-63CS

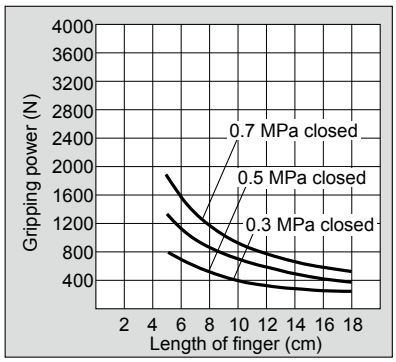

Dimensions

● HJD-32CS

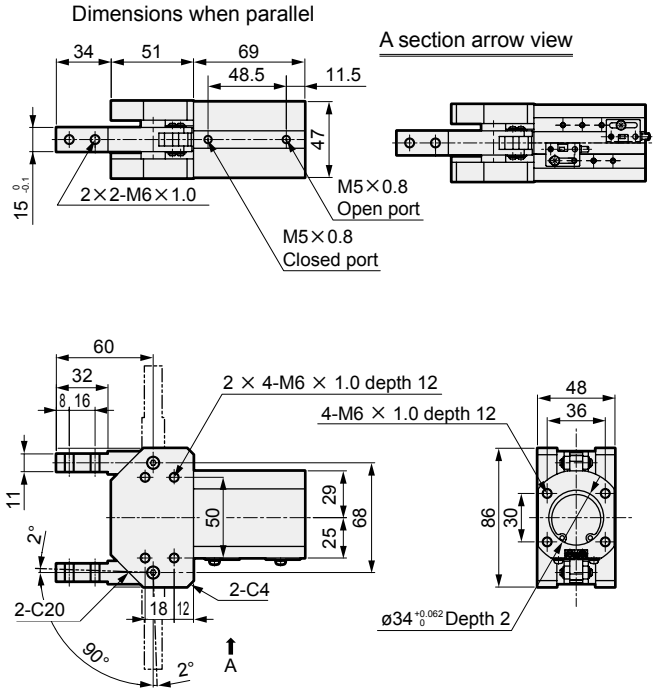

● HJD-40CS

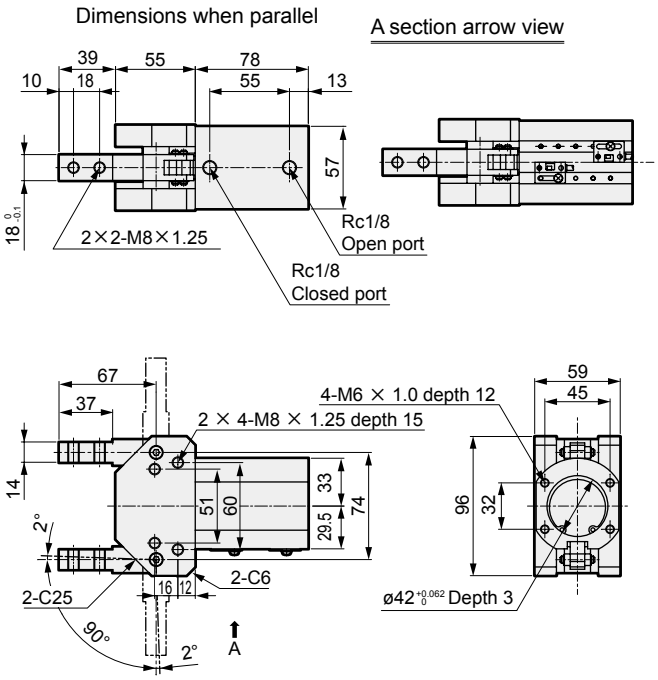

● HJD-50CS

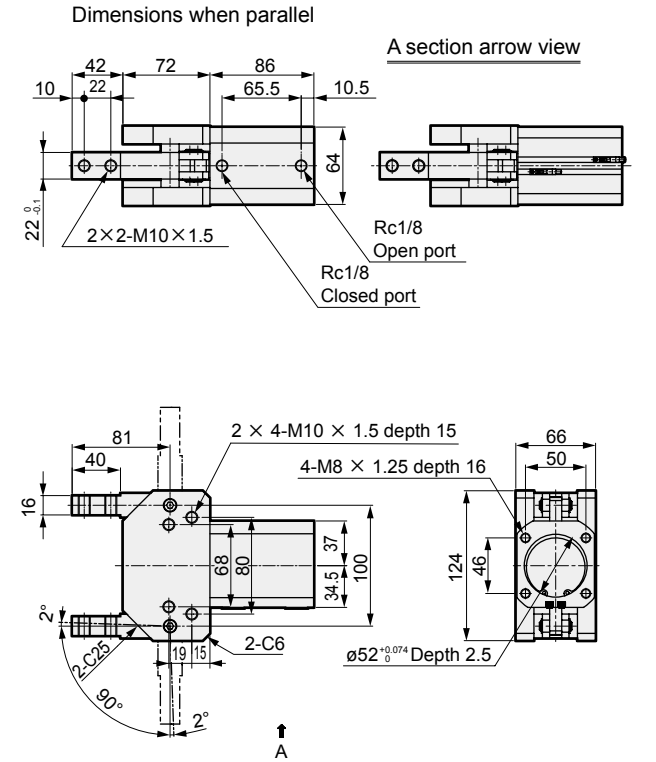

● HJD-63CS

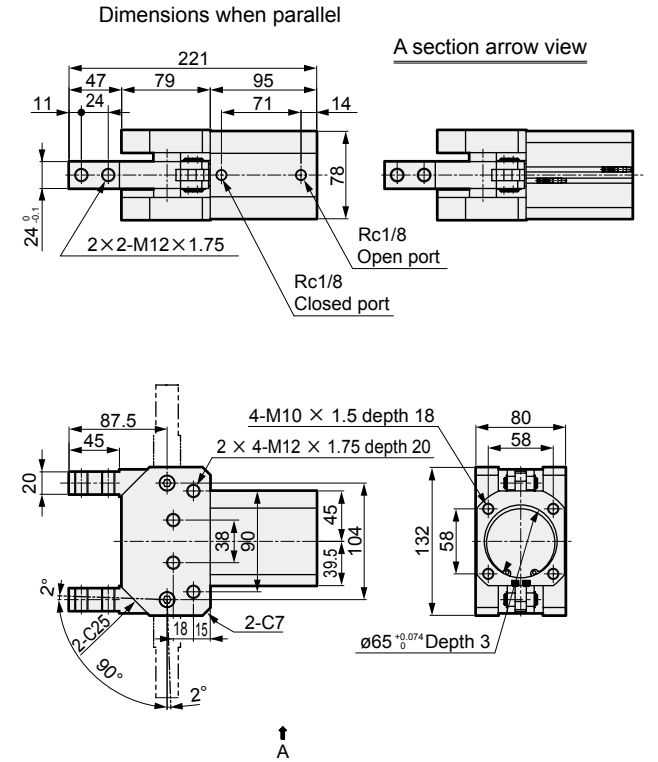

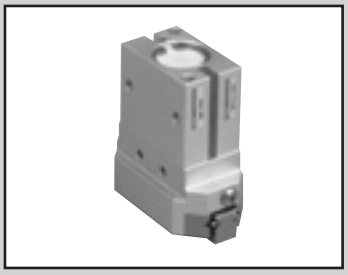

Centering hand

BHE Series

● Operating stroke: 7, 10, 14, 16, 22 mm

Double acting

RoHS CAD

Specifications

Item	BHE-01CS	BHE-03CS	BHE-04CS	BHE-05CS	BHE-06CS
Bore size mm	ø12	ø16	ø20	ø25	ø32
Working fluid	Compressed air				
Max. working pressure MPa	0.7				
Min. working pressure MPa	0.2				
Ambient temperature °C	5 to 60				
Port size	M3		M5		
Operating stroke mm	7	10	14	16	22
Rod diameter mm	ø6	ø8	ø10	ø12	ø16
Repeatability mm	±0.01				
Centering precision mm	±0.05 (*1) (*2)				
Weight kg	0.108	0.154	0.260	0.438	1.040
Lubrication	Not required (use turbine oil class 1 ISO VG32 if necessary for lubrication)				

*1: Centering precision is the hand end mounting part spigot center reference.
*2: The initial value is listed.

Switch specifications

Item	Proximity 2-wire	Proximity 3-wire
	T2H/V	T3H/V
Applications	Dedicated for programmable controller	For programmable controller, relay
Output method	—	NPN output
Power supply voltage	—	10 to 28 VDC
Load voltage/current	10 to 30 VDC, 5 to 20mA (*1)	30 VDC or less, 100 mA or less
Indicator lamp	LED (Lit when ON)	
Leakage current	1 mA or less	10 μA or less
Weight	1 m: 18 g 3 m: 49 g 5 m: 80 g	

*1: The above max. load current is 20 mA at 25°C. If the operating ambient temperature around the switch is higher than 25°C, the current is lower than 20 mA. (5 to 10 mA at 60°C)
***2: Refer to Ending Page 1 for detailed switch specifications and dimensions.**
*3: The BHE uses a crossover roller, and the smoothness of operation may vary depending on the working status. Basic performance is not affected, but if the change in smoothness of operation does not suit the usage method, consider LHA with linear guide (ball guide).

* The BHE-LN Series with length measuring function (length measuring sensor) is also available. Refer to page 1465 for details.

How to order

Without switch (built-in magnet for switch)

BHE - 03CS - D

With switch (built-in magnet for switch)

BHE - 03CS - D - T2H - R

Ⓐ Size

Ⓑ Option

Ⓒ Switch model No.

Ⓓ Switch quantity

Code	Description
Ⓐ Size	
01CS	
03CS	
04CS	
05CS	
06CS	
Ⓑ Option	
Blank	Standard
D	Open stroke adjustment mechanism
E	Close stroke adjustment mechanism
DE	Open and close stroke adjustment mechanism

Ⓒ Switch model No.

Straight lead wire	L-shaped lead wire	Contact	Voltage AC	Voltage DC	Indicator	Lead wire
T2H*	T2V*	Proximity		●	1-color LED	2-wire
T3H*	T3V*	Proximity		●	1-color LED	3-wire

* Lead wire length	
Blank	1 m (standard)
3	3 m (option)
5	5 m (option)
Ⓓ Switch quantity	
R	1 on open side
H	1 on closed side
D	2

[Example of model No.]

BHE-03CS-D-T2H-R

Ⓐ Size : 03CS
Ⓑ Option : Open stroke adjustment mechanism
Ⓒ Switch model No.: Proximity T2H switch, lead wire 1 m
Ⓓ Switch quantity : 1 on open side

How to order switch

SW - T2H

Switch model No.
(Item Ⓒabove)

Specifications for rechargeable battery

(Catalog No. CC-1226A)

BHE - … - P4*

● Design compatible with rechargeable battery manufacturing process.

* Contact CKD for details.

LCM
LCR
LCG
LCW
LCX
STM
STG
STS/STL
STR2
UCA2
ULK*
JSK/M2
JSG
JSC3/JSC4
USSD
UFCD
USC
UB
JSB3
LMB
LML
HCM
HCA
LBC
CAC4
UCAC2
CAC-N
UCAC-N
RCS2
RCC2
PCC
SHC
MCP
GLC
MFC
BBS
RRC
GRC
RV3*
NHS
HRL
LN
Hand
Chuk
MecHnd/Chuk
ShkAbs
FJ
FK
SpdContr
Ending
LSH-HP
LSH
FH100
BSA2
BHA/BHG
LHA
LHAG
HAP
HKP
HCP
HGP
HLF2
HLA/HLB
HLAG/HLBG
HLC
HLD
HMF
HMF-G
HMFB
HFP
FH500
HBL
HJL
HMD
HDL
HJD
BHE

Internal structure and parts list

● BHE-01CS to 06CS

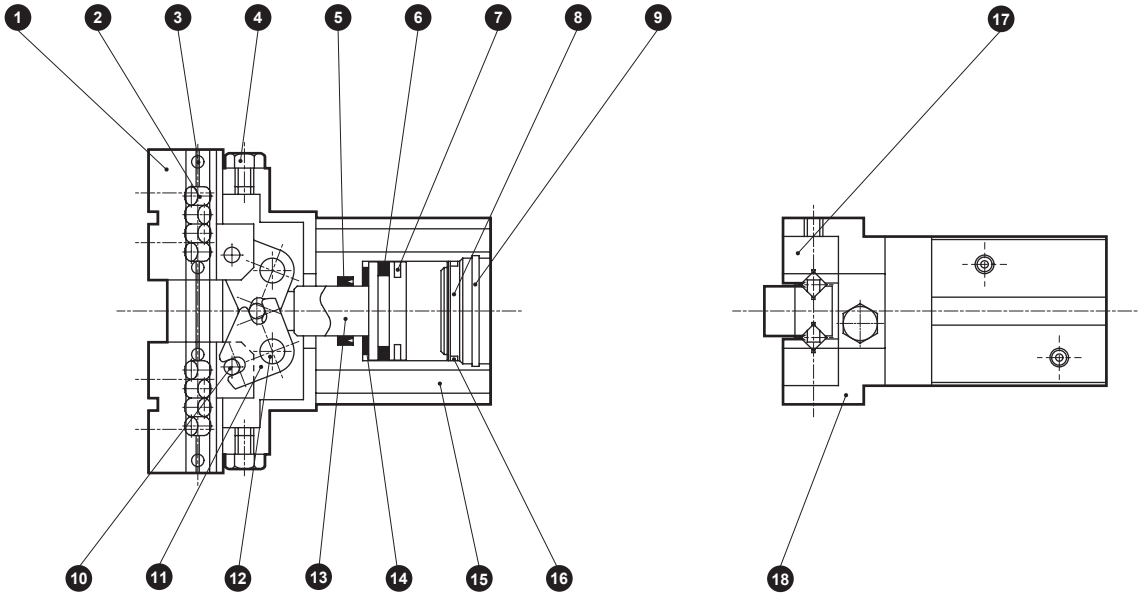

Cannot be disassembled

No.	Part name	Material	Remarks	No.	Part name	Material	Remarks
1	Finger	Stainless steel		10	Operation shaft	High carbon chrome bearing steel	
2	Cross roller	High carbon chrome bearing steel		11	Arm	Stainless steel	
3	Spring pin	Stainless steel		12	Fulcrum axis	High carbon chrome bearing steel	
4	Plug	Copper alloy		13	Piston	Stainless steel	
5	Rod packing	Nitrile rubber		14	Cushion	Urethane rubber	
6	Piston packing	Nitrile rubber		15	Cylinder	Aluminum alloy	
7	Magnet			16	Cylinder gasket	Nitrile rubber	
8	Cylinder guard	Resin		17	Bearing guide	Stainless steel	
9	Snap ring	Stainless steel		18	Body	Aluminum alloy	

Option internal structure

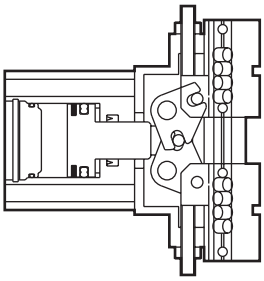

Open stroke adjustment mechanism
(Option: D)

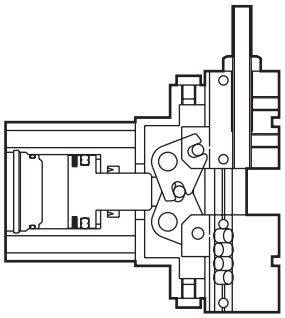

Close stroke adjustment mechanism
(Option: E)

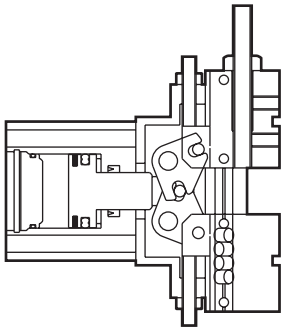

Open and close stroke adjustment mechanism
(Option: DE)

Gripping force performance data

- Gripping force represents the thrust (per finger) in the arrow direction shown in the figure.
- The gripping force in the opening/closing directions with finger length L of hand with a supply pressure of 0.3, 0.5 and 0.7 MPa is shown.
  - ·Open direction (⇦) - - - - - - (shown with broken line)
  - ·Closed direction (➡) ———— (shown with continuous line)

(Note) When making a selection, read the precautions for design and selection on page 1764.

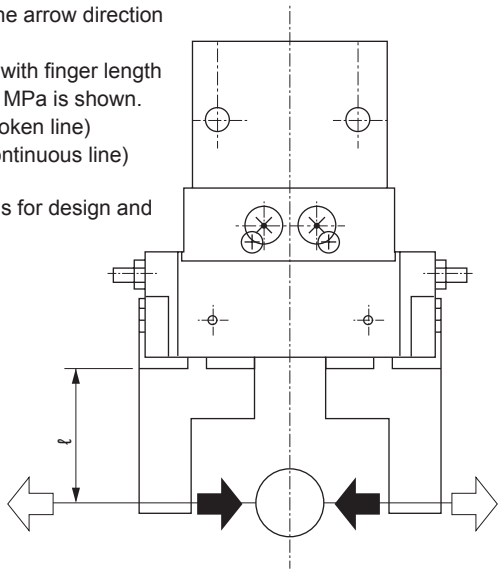

● BHE-01CS

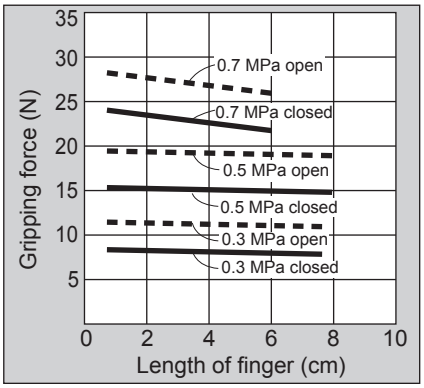

● BHE-03CS

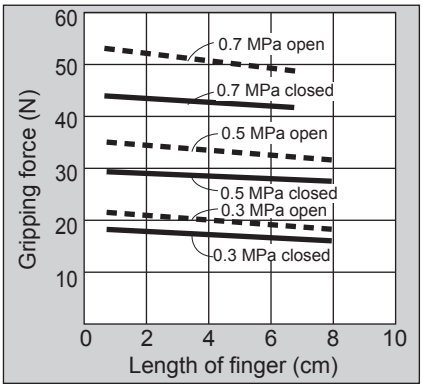

● BHE-04CS

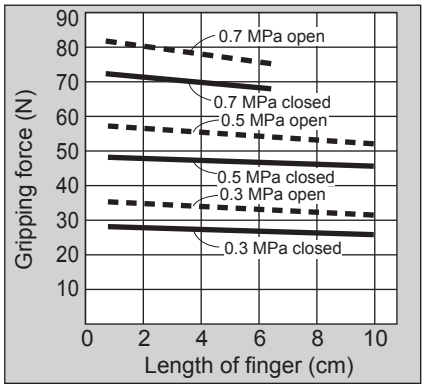

● BHE-05CS

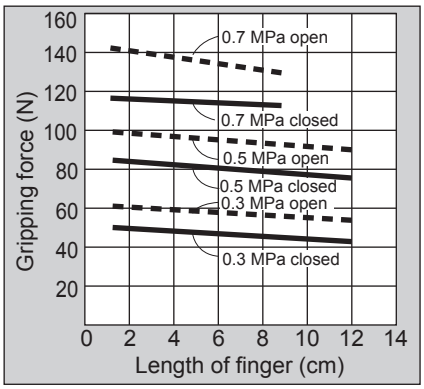

● BHE-06CS

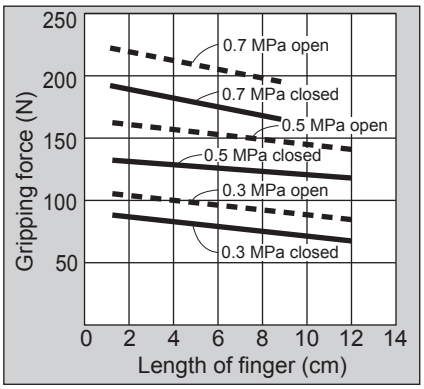

LCM
LCR
LCG
LCW
LCX
STM
STG
STS/STL
STR2
UCA2
ULK*
JSK/M2
JSG
JSC3/JSC4
USSD
UFCD
USC
UB
JSB3
LMB
LML
HCM
HCA
LBC
CAC4
UCAC2
CAC-N
UCAC-N
RCS2
RCC2
PCC
SHC
MCP
GLC
MFC
BBS
RRC
GRC
RV3*
NHS
HRL
LN
Hand
Chuk
MecHnd/Chuk
ShkAbs
FJ
FK
SpdContr
Ending
LSH-HP
LSH
FH100
BSA2
BHA/BHG
LHA
LHAG
HAP
HKP
HCP
HGP
HLF2
HLA/HLB
HLAG/HLBG
HLC
HLD
HMF
HMF-G
HMFB
HFP
FH500
HBL
HJL
HMD
HDL
HJD
BHE

Dimensions CAD

● BHE-01CS (Standard)
● BHE-01CS-D (Open stroke adjustment mechanism)

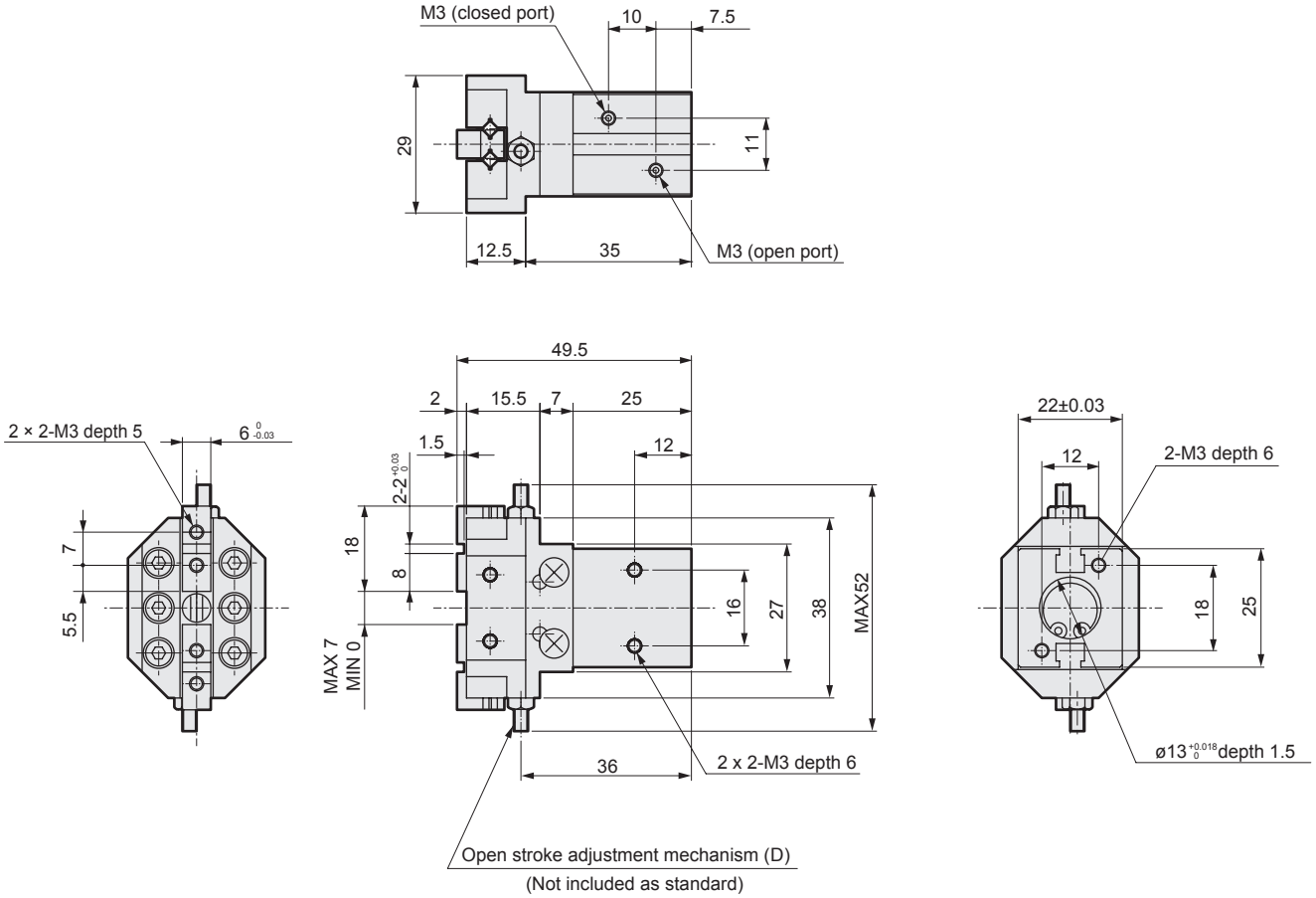

● BHE-01CS-E (Close stroke adjustment mechanism)
● BHE-01CS-DE (Open and close stroke adjustment mechanism)

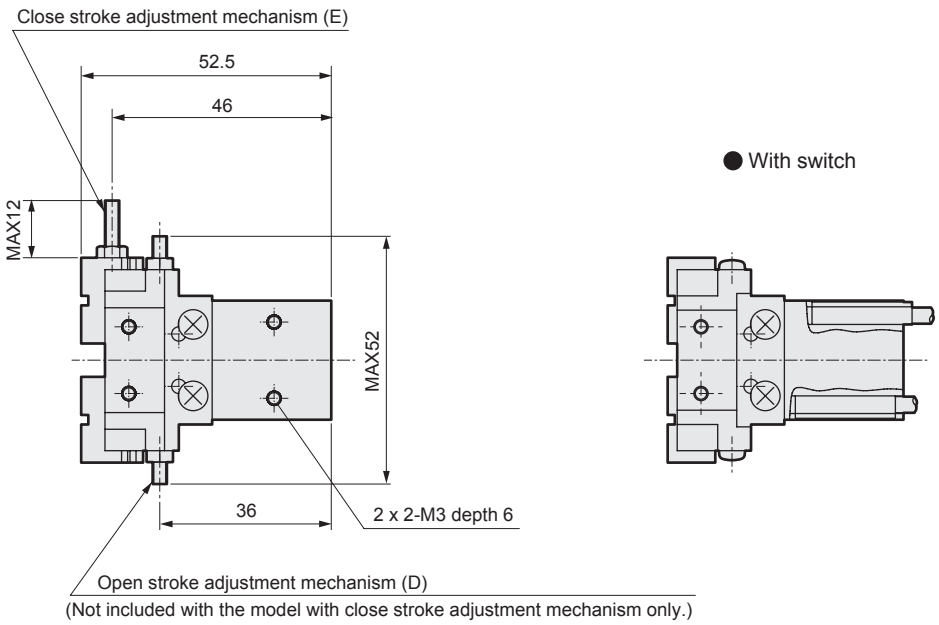

Dimensions

● BHE-03CS (Standard)
● BHE-03CS-D (Open stroke adjustment mechanism)

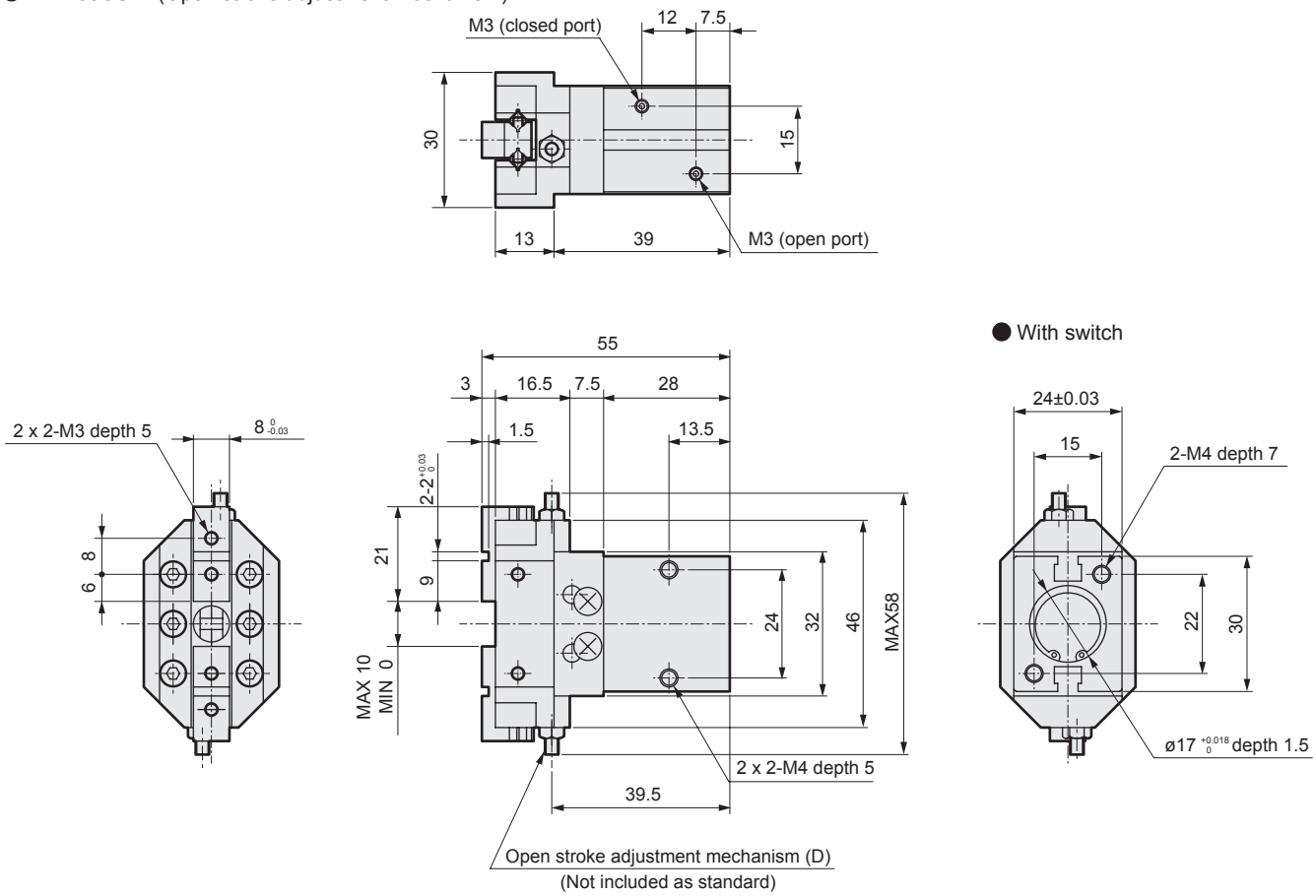

● BHE-03CS-E (Close stroke adjustment mechanism)
● BHE-03CS-DE (Open and close stroke adjustment mechanism)

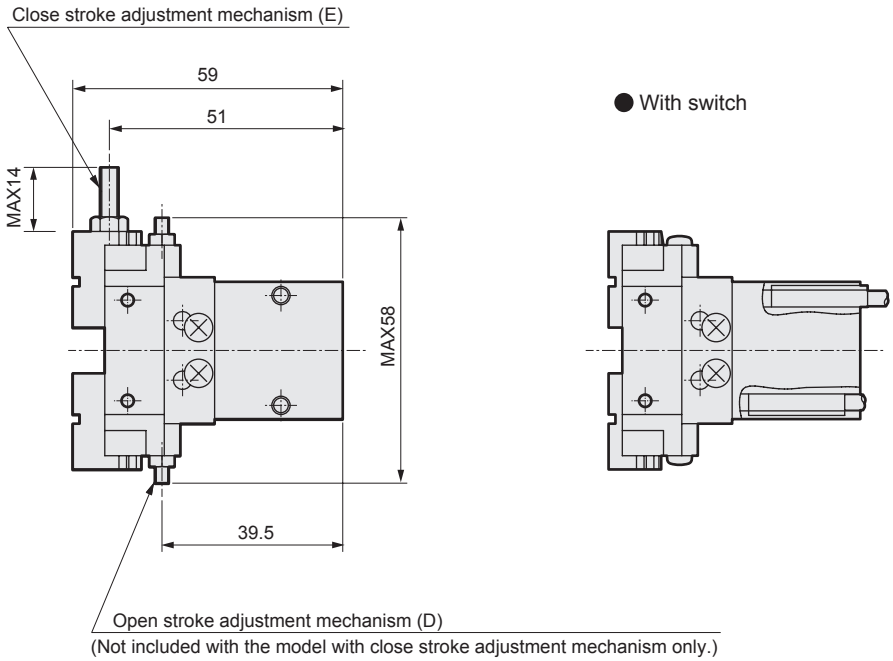

LCM
LCR
LCG
LCW
LCX
STM
STG
STS/STL
STR2
UCA2
ULK*
JSK/M2
JSG
JSC3/JSC4
USSD
UFCD
USC
UB
JSB3
LMB
LML
HCM
HCA
LBC
CAC4
UCAC2
CAC-N
UCAC-N
RCS2
RCC2
PCC
SHC
MCP
GLC
MFC
BBS
RRC
GRC
RV3*
NHS
HRL
LN
Hand
Chuk
MecHnd/Chuk
ShkAbs
FJ
FK
SpdContr
Ending
LSH-HP
LSH
FH100
BSA2
BHA/BHG
LHA
LHAG
HAP
HKP
HCP
HGP
HLF2
HLA/HLB
HLAG/HLBG
HLC
HLD
HMF
HMF-G
HMFB
HFP
FH500
HBL
HJL
HMD
HDL
HJD
BHE

Dimensions

● BHE-04CS (Standard)
● BHE-04CS-D (Open stroke adjustment mechanism)

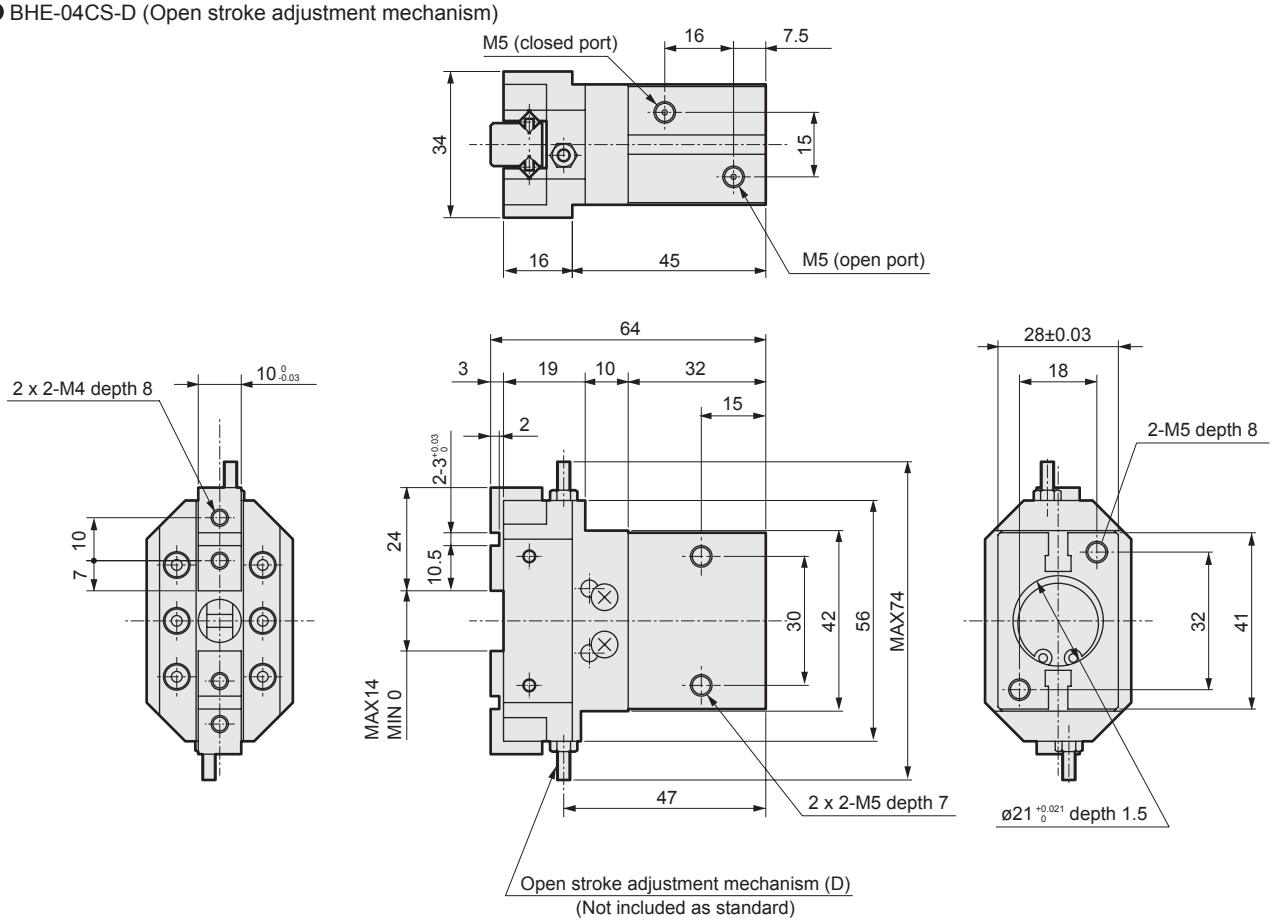

● BHE-04CS-E (Close stroke adjustment mechanism)
● BHE-04CS-DE (Open and close stroke adjustment mechanism)

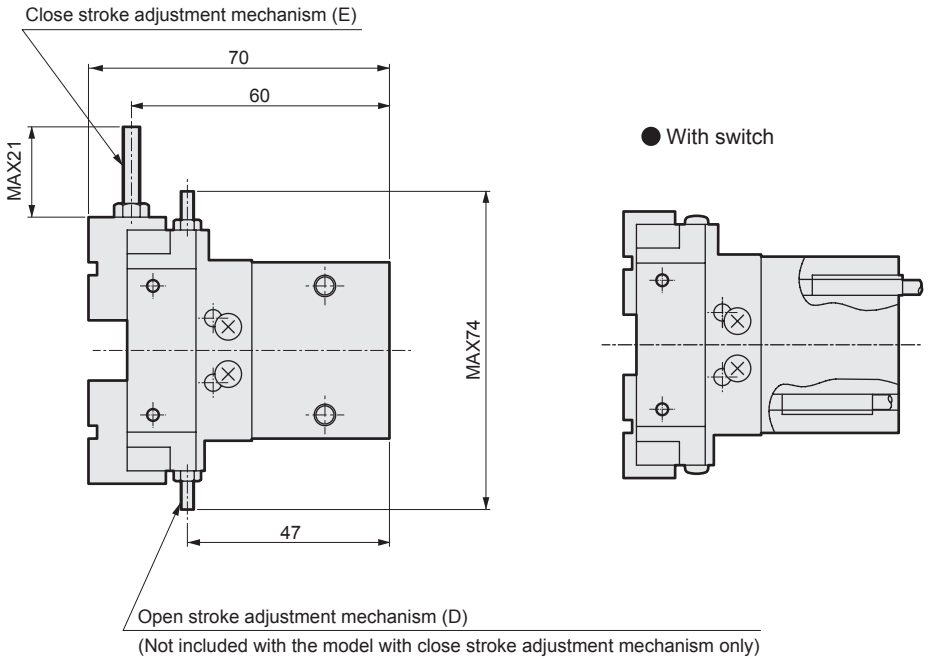

Dimensions

● BHE-05CS (Standard)
● BHE-05CS-D (Open stroke adjustment mechanism)

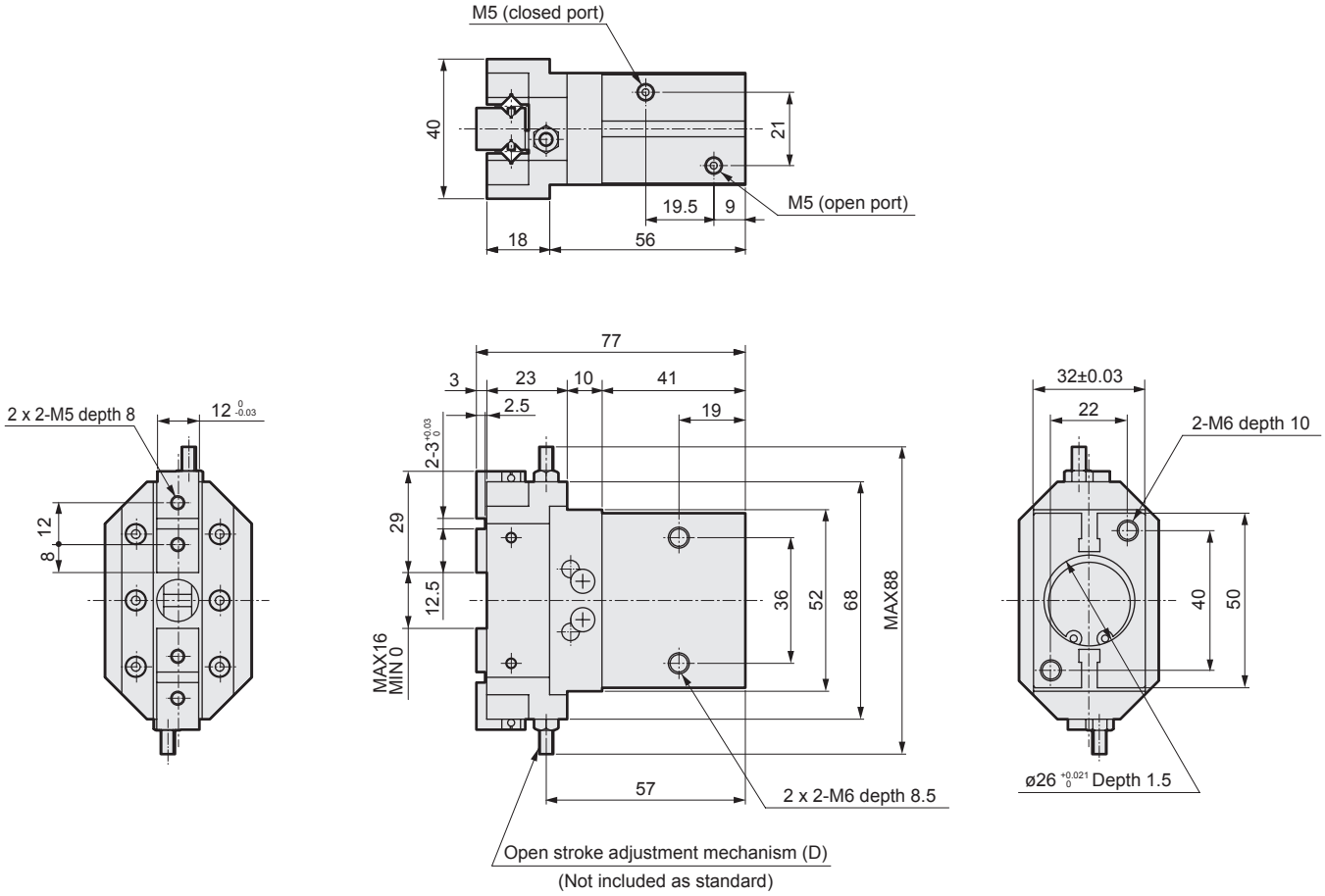

● BHE-05CS-E (Close stroke adjustment mechanism)
● BHE-05CS-DE (Open and close stroke adjustment mechanism)

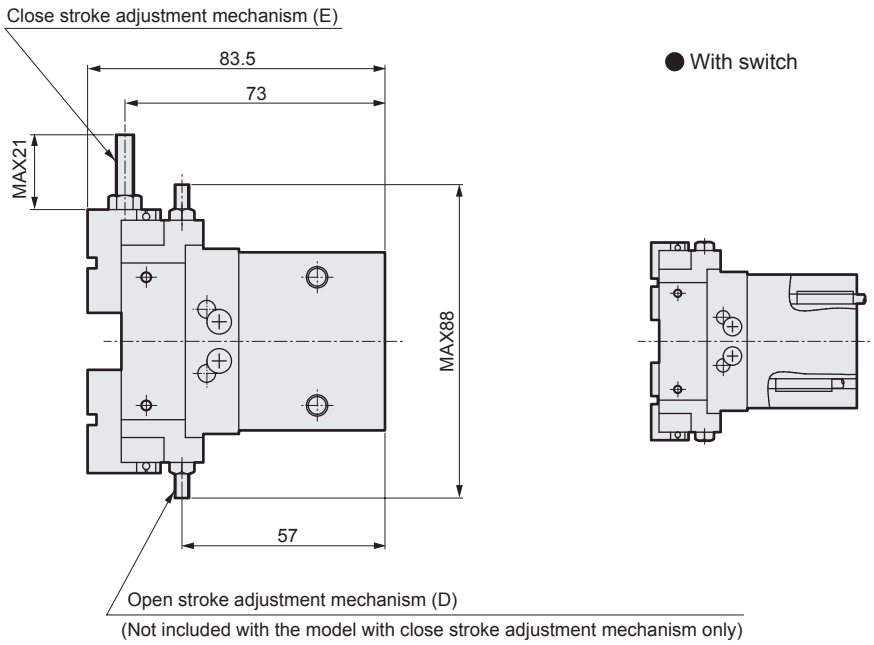

LCM
LCR
LCG
LCW
LCX
STM
STG
STS/STL
STR2
UCA2
ULK*
JSK/M2
JSG
JSC3/JSC4
USSD
UFCD
USC
UB
JSB3
LMB
LML
HCM
HCA
LBC
CAC4
UCAC2
CAC-N
UCAC-N
RCS2
RCC2
PCC
SHC
MCP
GLC
MFC
BBS
RRC
GRC
RV3*
NHS
HRL
LN
Hand
Chuk
MecHnd/Chuk
ShkAbs
FJ
FK
SpdContr
Ending
LSH-HP
LSH
FH100
BSA2
BHA/BHG
LHA
LHAG
HAP
HKP
HCP
HGP
HLF2
HLA/HLB
HLAG/HLBG
HLC
HLD
HMF
HMF-G
HMFB
HFP
FH500
HBL
HJL
HMD
HDL
HJD
BHE

Dimensions

● BHE-06CS (Standard)
● BHE-06CS-D (Open stroke adjustment mechanism)

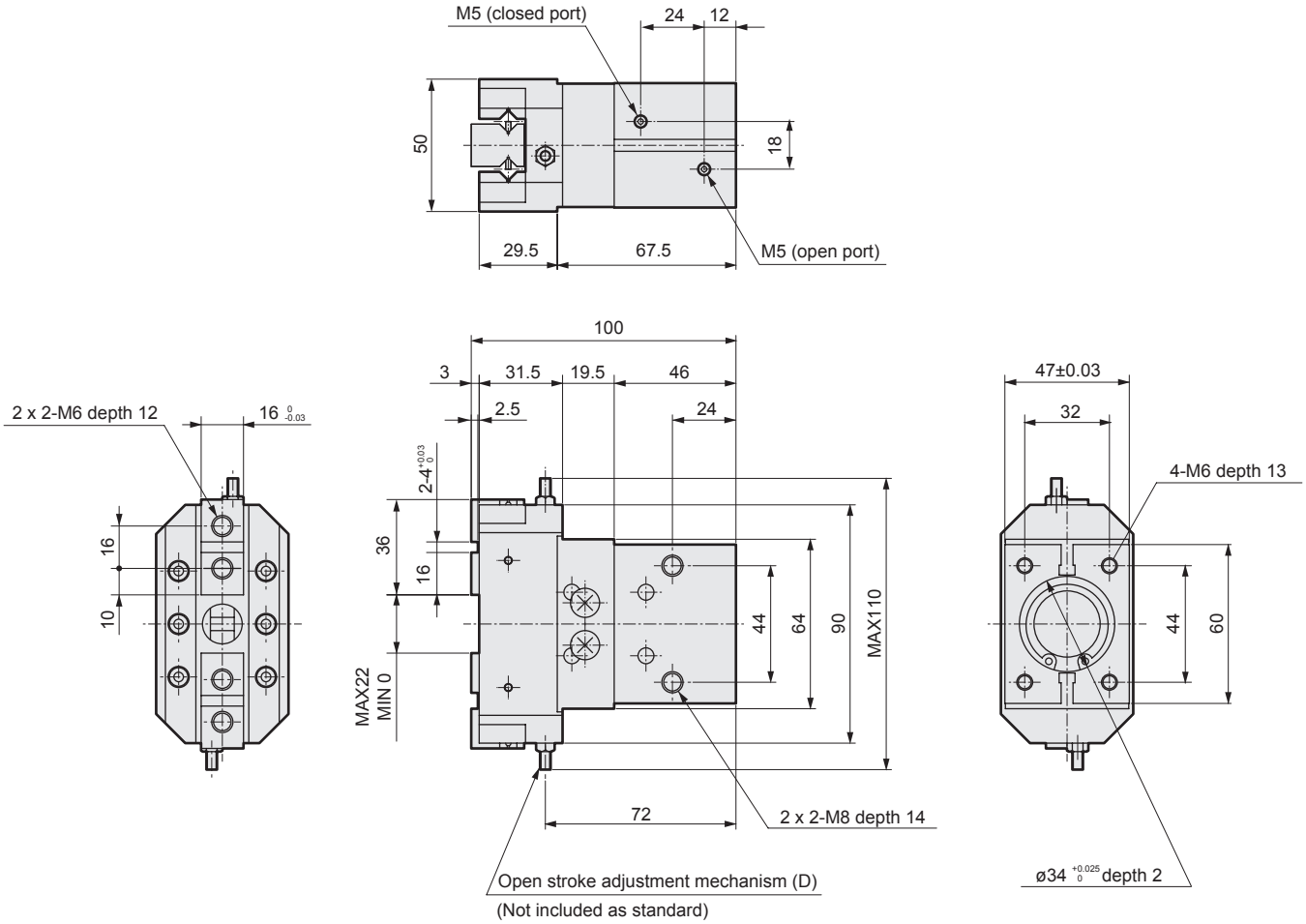

● BHE-06CS-E (Close stroke adjustment mechanism)
● BHE-06CS-DE (Open and close stroke adjustment mechanism)

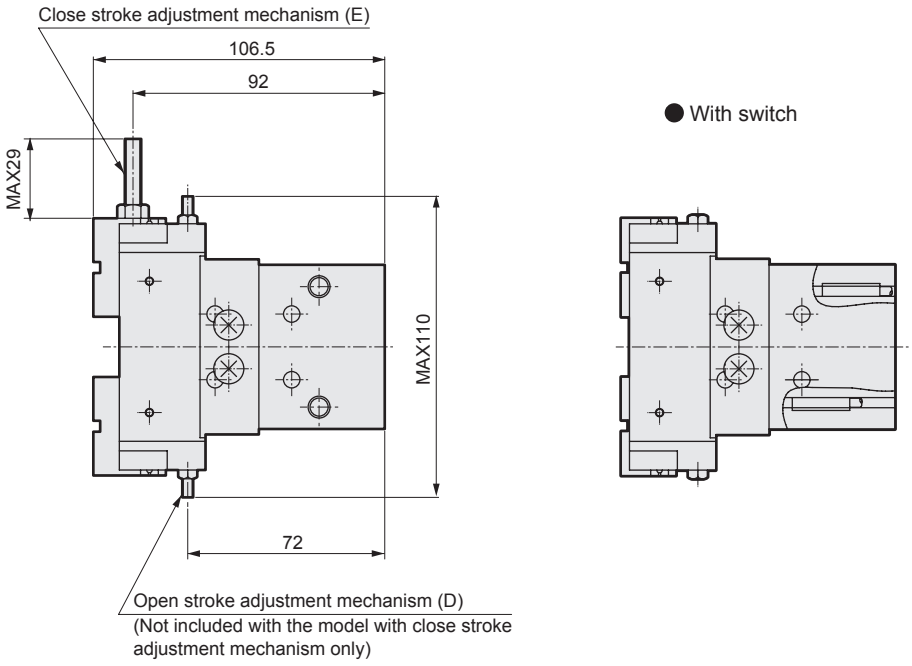

MEMO

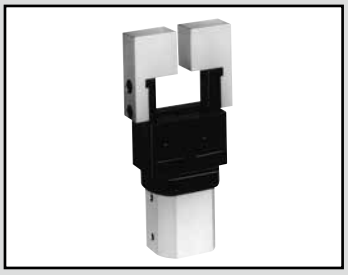

Attachment

● Material : Iron, engineering plastic

RoHS CAD

Features

Attachments machined for use with a variety of models are available to match user workpieces.

● Socket and spigot section machined
Troublesome reference section (spigot section) machined.
Wide series variation to select according to workpiece shape and dimension.

● 2 types of material for attachment
Iron (S50C) and engineering plastic (MC nylon) are available for optimum selection according to material and working condition of workpiece.

Compatible model for standard attachment

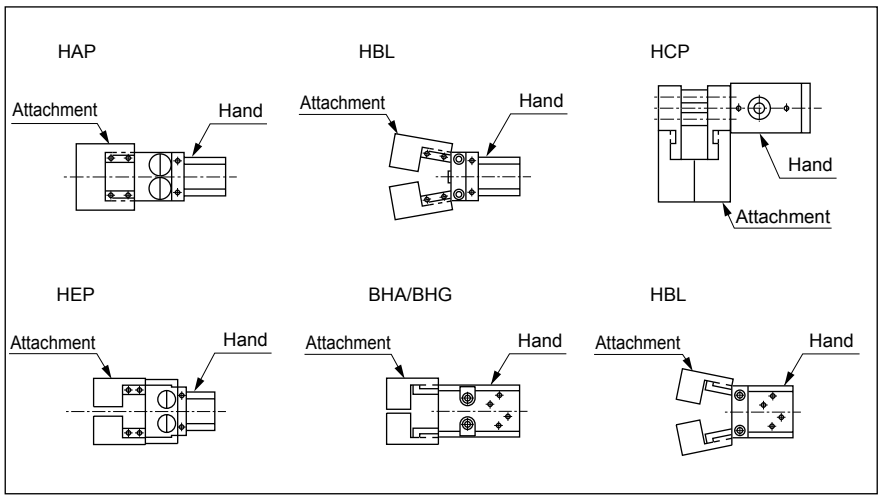

Attachment applications

Hand applications		
Soft jaw 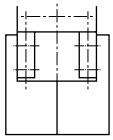	Compact workpiece 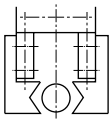	Large workpiece 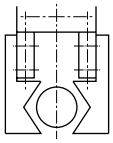
Miscellaneous shape workpieces 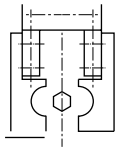	Vertical grasp (inside tensile workpiece) 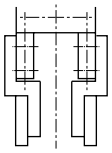	Vertical grasp 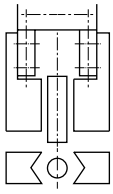

How to order

(Note : When ordering repair parts, 1 pc. is provided.)

BHA - Y1 - 110

Ⓐ Model Ⓑ Material Ⓒ Attachment No.

Ⓐ Model		Ⓑ Material		Ⓒ Attachment No.			
Code	Description	Code	Description	Code	Compatibility	Code	Compatibility
FH	Feather hand (FH100/FH500)	**Y1**	Material S50C	**110**	HAP-1C	**210**	HEP-5CS
HAP	Parallel hand	**Y2**	Material MC nylon	**120**	HAP-2CS, HBL-2CS	**310**	FH110, FH510
BHA	Compact cross roller parallel hand			**130**	HAP-3CS, HBL-3CS	**320**	FH112, FH512
BHG	Compact cross roller parallel hand with rubber cover			**140**	HAP-4CS, HBL-4CS	**330**	FH116, FH516
HEP	Bearing parallel hand			**150**	HBL-1CS	**340**	FH120, FH520
HCP	Lateral parallel hand			**160**	HCP-2CS	**350**	FH125
HBL	Fulcrum hand			**170**	HCP-3CS	**260**	BHA-01CS1, BHG-01CS
				180	HCP-4CS	**270**	BHA-03CS1, BHG-03CS
				190	HEP-3.5CS	**280**	BHA-04CS1, BHG-04CS
				200	HEP-4CS	**290**	BHA-05CS1, BHG-05CS

Dimensions

● 110 to 350

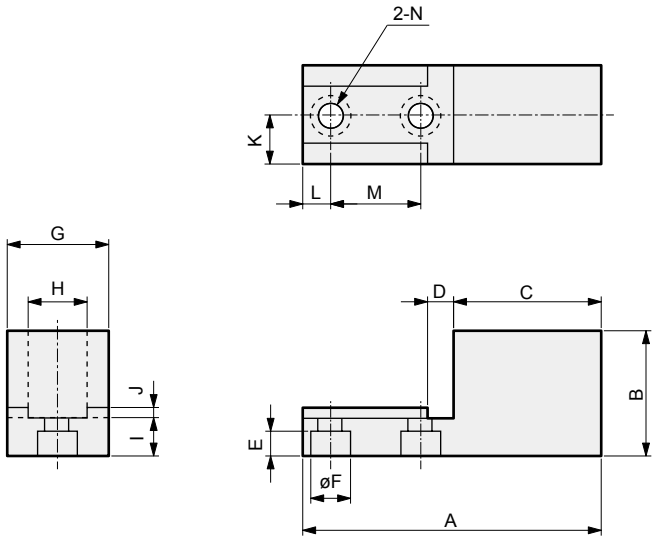

* Material
Y1:S50C
Y2: MC nylon

Attachment No.	Compatibility	* Material	Dimensions (mm) A	B	C	D	E	øF	G	H$^{+0.02}_{0}$	I	J	K	L	M	øN	Weight (g)
110	HAP-1C	Y1	40	17	24.5	4.5	3	6	10	8	5	1.5	5	3.5	8	3.5	39
		Y2		21							9						8
120	HAP-2CS HBL-2CS	Y1	50	26	28	5.5	4	8	20	10	6	2	10	5	12	4.5	135
		Y2		30							10						25
130	HAP-3CS HBL-3CS	Y1	60	33	30.5	6.5	5	9.5	20	12	8	2	10	5.5	18	5.5	194
		Y2															29
140	HAP-4CS HBL-4CS	Y1	80	43	44	7.5	6	11	20	14	10	2	10	8	20	6.5	352
		Y2		50							17						53
150	HBL-1C	Y1	40	19	19	4.5	3	6	12	8	5	1.5	6	4	10	3.5	44
		Y2			21												7
160	HCP-2CS	Y1	60	29	33	9.5	5	9.5	22	$18^{+0.2}_{+0.1}$	9	2	11	11	10	5.5	206
		Y2															31
170	HCP-3CS	Y1	70	35	34	11.5	6	11	25	$20^{+0.2}_{+0.1}$	10	2	12.5	8	20	6.5	303
		Y2															45
180	HCP-4CS	Y1	80	40	42	13	6	11	35	$25^{+0.2}_{+0.1}$	10	2	17.5	10	20	6.5	563
		Y2	78	44						25	14			8			97
190	HEP-3.5CS	Y1	80	41	50	7.5	5	9.5	20	14	10	2	10	6	18	5.5	360
		Y2		49							18						70
200	HEP-4CS	Y1	120	60	81	11.5	6	11	30	22	13	2	15	8	20	6.5	1245
		Y2		77					32		30		16				270
210	HEP-5CS	Y1	135	60	91	14.5	8	14	30	28	16	2	15	10	25	8.5	1443
		Y2		79					38		35		19				382
310	FH110 FH510	Y1	29.5	15	14	4.5	3	6	12	7	4	1.5	6	3.5	8	3.5	22
		Y2															4
320	FH112 FH512	Y1	29.5	16.5	14	4.5	3	6	12	7	4	1.5	6	3.5	8	3.5	23
		Y2															4
330	FH116 FH516	Y1	39	20	20.5	5.5	4	8	12	10	5	1.5	6	3.5	10	4.5	48
		Y2															8
340	FH120 FH520	Y1	39	22.5	20.5	5.5	4	8	12	10	5	1.5	6	3.5	10	4.5	53
		Y2		25.5							8						10
350	FH125	Y1	48.5	22.5	28.5	6.5	5	9.5	14	12	8	2	7	4.5	10	5.5	105
		Y2		25.5							14						17
260	BHA-01CS1 BHG-01CS	Y1	30	17.5	14.5	4.5	3	6	14	10	5	1.5	7	4	8	3.5	38
		Y2															6
270	BHA-03CS1 BHG-03CS	Y1	40	21	21	5.5	4	8	14	10	6	1.5	7	4.5	10	4.5	61
		Y2		23							8						11
280	BHA-04CS1 BHG-04CS	Y1	40	26.5	21	5.5	4	8	14	10	6	1.5	7	4.5	10	4.5	76
		Y2		29.5							9						12
290	BHA-05CS1 BHG-05CS	Y1	50	33	28.5	6.5	5	9.5	14	10	8	2	7	6	10	5.5	123
		Y2		39							14						23

Safety Precautions

Be sure to read this section before use.

Refer to Intro Page 73 for general information of the cylinder, and to Intro Page 80 for general information of the cylinder switch.

Product-specific cautions: Hand Series

Design/selection

1. Common

WARNING

- If the moving workpiece poses a possible risk to personnel or if fingers could be caught in the master key, etc., install a protective cover, etc.
- If the circuit pressure drops due to power failure or air source trouble, the gripping force may decrease and the workpiece may fall. Provide position locking measures, etc., so that personnel are not injured or machines damaged.

CAUTION

- Precautions for gripping force
  - Gripping force represents the force holding the workpiece, as shown in the figure below.

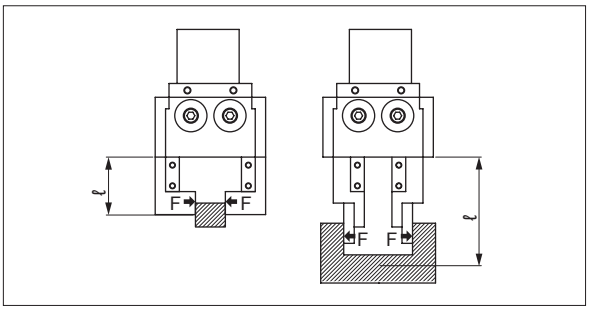

  - Performance data indicates the gripping force of hand at finger length ℓ at a supply pressure of 0.15 to 0.7 MPa.

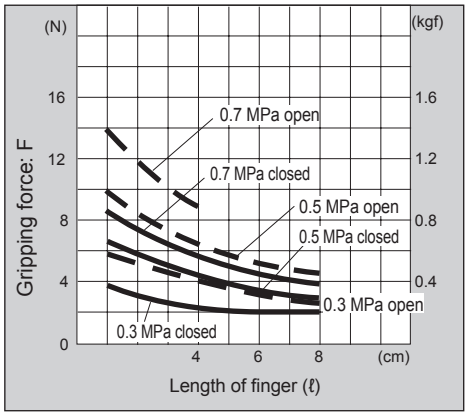

  - To find the gripping force from performance data, if the distance from the attachment to the workpiece center of gravity when manufactured is ℓ, gripping force F is
    When ℓ=ℓ1 F = F1
    When ℓ=ℓ2 F = F2 Refer to the upper right figure is expressed as above.
  - When mounting an L-shaped attachment, select length as shown below.
    Example:If the L-shape is 30mm in the finger direction and 30mm at a 90° angle, assume the attachment length is 60mm.
  - Length of attachment should be within the numerical value given in the gripping force performance data table of each model.
  - Max. working length of attachment should be within the performance data.
    Workpiece (weight W_L) with the following reference points.
    W_Lx9.8x5<(FxN)[Holding only]
    W_Lx9.8x10<(FxN)[Normal transport]
    W_Lx9.8x20<(FxN)[Sudden accelerated transport]

    W_L: Weight of workpiece [kg]
    F: Gripping force [N]
    N: Number of fingers [pcs.]

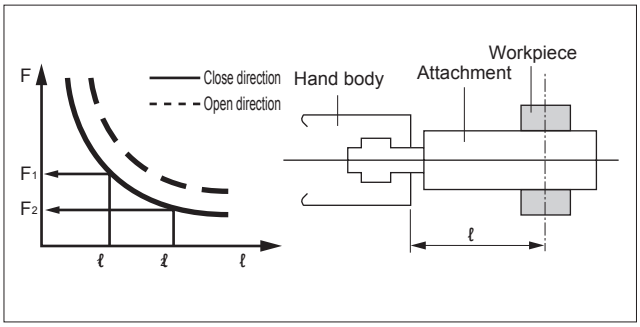

- Use attachments as short and lightweight as possible. If the attachment is long and heavy, inertia increases when opening and closing. This may cause play in the finger, and adversely affect life due to rapid wear on the finger sliding part.
  - Length of attachment should be within the numerical values of performance data.
  - The weight of the attachment affects durability, so check that the weight is less than the following value.
    W < 1/4H (1 attachment)W: Weight of attachment
    H:Weight of Hand product

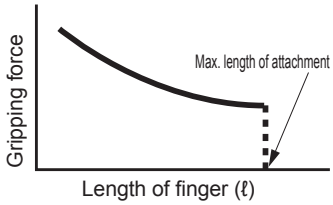

- Avoid gripping the workpiece with single acting spring force as much as possible. The gripping force may become unstable, leading to operation failure.
- With the single acting type, the spring force is minimized near the stroke end (open end for NO, closed end for NC). Due to the structure operated by the spring force, it may not return when operated with a short stroke; take care of the attachment shape so that the workpiece can be
- The rubber cover is a consumable part. Replace if necessary.

■ Working environment

At cutting, casting, or welding plants, there is a risk of foreign matter, such as cutting fluid, chips, powder and dust, entering the equipment. Use covers and such to prevent this as much as possible. Do not use the equipment under the following environments.

- Exposed to cutting oil (because the sliding section is abraded by abrasive or polishing debris in the liquid)
- When the atmosphere contains organic solvents, chemicals, acids, alkalis, kerosene, etc.
- Exposed to water

■ When gripping long or large workpieces, stable gripping requires a grip on the center of gravity. Stability is a must when using larger or multiple workpieces as well.

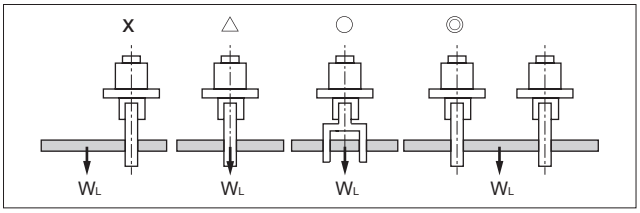

◎: Excellent, ○: Good, △: Conditional, X: NG

■ Select a model that has sufficient power to grip the workpiece weight.

■ Select a model that has sufficient opening/closing width for the workpiece size.

■ If directly inserting the workpiece into the jig with the hand, consider clearance during design. The hand could be damaged.

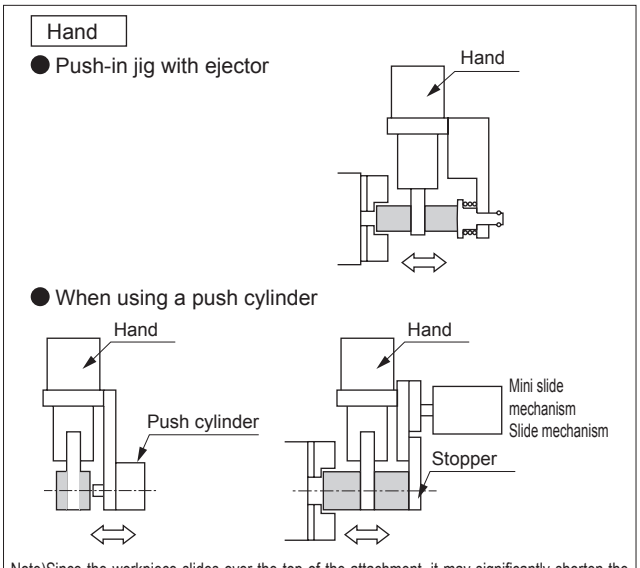

Note)Since the workpiece slides over the top of the attachment, it may significantly shorten the service life of the chuck. The shape of the attachment should be sufficiently considered.

■ If the attachment is not rigid enough, the resulting sag could cause the master key to twist or adversely affect operation.

■ Depending on usage conditions and individual products of the product (LSH, LSH-*, LSHL/M-*, LST(M), LHA(G), HLF2) using a finite orbit linear guide, the steel ball may increase in cantilever sliding resistance and the gripping force may decrease. In this case, correction is possible by increasing the working pressure or by inserting a full stroke operation between the gripping operations.

■ Adjust the gripper opening/closing speed using the speed controller (sold separately).

When used at high speeds, development of backlash may occur sooner. In addition, the workpiece may vibrate due to shocks in opening/closing, which may lead to erroneous chucking, erroneous insertion of workpieces and poor repeatability.

■ Note that the smoothness of operations of products using crossover rollers (BSA2, BHA, BHG, HKP, BHE) may vary depending on the working status. (Basic performance is not affected.)

2. Linear slide cylinder LSH-HP1 Series

■ Condensation (water drops) may occur in the piping in certain conditions if an actuator with small bore size/short stroke is operated at high frequency. Take measures against condensation with a quick exhaust valve, etc.

■ The rubber cover does not ensure reliable air tightness. Due to the structure, there may be a gap between the rubber cover, and the body/fingers. If this raises an issue, please contact us.

3. Linear slide cylinder LSHM-HP2 Series

■ Use only a DC safety power supply. Do not connect motors, valves, etc., that generate noise to the power supply used in this device.

■ While wiring, ensure that inductive noise is not applied to the sensor and amplifier and that power lines such as motors do not use the same piping and wiring (through multi-core cables, etc.). Use caution with the inverter power supply and its wiring section as well. (Check that the inverter power frame ground is correctly grounded and noise is released.)

■ Note that noise resistance performance may be adversely affected if the length of the cable is 5 m or greater.

■ Make sure that the cable is wired so that it is free of local bends and tension. Make sure that the cable is free of repeated bends.

■ Make sure that force of 30 N or over is not applied to the M8 connector section.

■ This product cannot be used outdoors or in an atmosphere containing corrosive elements.

4. Linear Slide Hand LSH Series

■ When mounting an L-shaped attachment, use within the range on page 1588.

5. Shockless LSH-*-C

⚠ CAUTION

■ Note that, structurally, the closed side end position cannot be retained if air supply is cut off. When detecting the closed side end by switch, set the switch position with pneumatic pressure applied, as otherwise the position may be out of the detection range.

LCM
LCR
LCG
LCW
LCX
STM
STG
STS/STL
STR2
UCA2
ULK*
JSK/M2
JSG
JSC3/JSC4
USSD
UFCD
USC
UB
JSB3
LMB
LML
HCM
HCA
LBC
CAC4
UCAC2
CAC-N
UCAC-N
RCS2
RCC2
PCC
SHC
MCP
GLC
MFC
BBS
RRC
GRC
RV3*
NHS
HRL
LN
Hand
Chuk
MecHnd/Chuk
ShkAbs
FJ
FK
SpdContr
Ending
LSH-HP
LSH
FH100
BSA2
BHA/BHG
LHA
LHAG
HAP
HKP
HCP
HGP
HLF2
HLA/HLB
HLAG/HLBG
HLC
HLD
HMF
HMF-G
HMFB
HFP
FH500
HBL
HJL
HMD
HDL
HJD
BHE

Mounting, installation and adjustment

1. Common

⚠CAUTION

- If a lateral load or load with a large impact is applied to the finger, play or damage could occur. Adjust and check that external force is not applied to the finger.
- The cylinder switch may malfunction if there is a magnetic substance such as a metal plate installed adjacently. Check that a distance of 10 mm is provided from the surface of the cylinders.

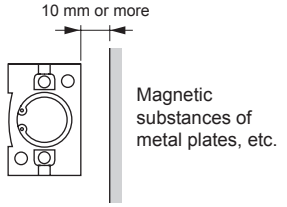

- The cylinder switch may malfunction if cylinders are installed adjacently. Check that the following distances are provided between cylinders.

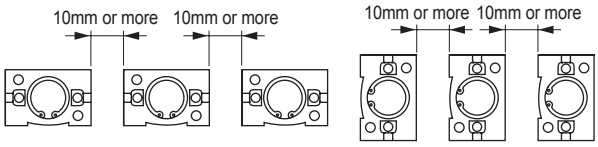

<LSH-HP series>

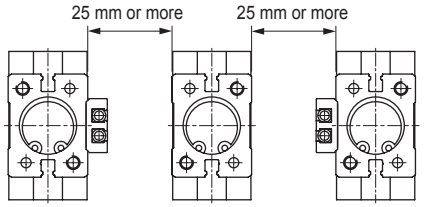

- Clamping operation is accurate when performed as softly as possible at a low speed. Repeatability is also stable.
- Regularly grease the sliding section of the finger. Regular replenishment can extend service life further.
- Installing the attachment
  When mounting the attachment to the finger, to prevent any effect on the hand, support with a wrench, etc., when tightening so that the finger is not twisted. We recommend mounting the attachment on the finger outer surface. (Precision suffers on the finger inner surface.)

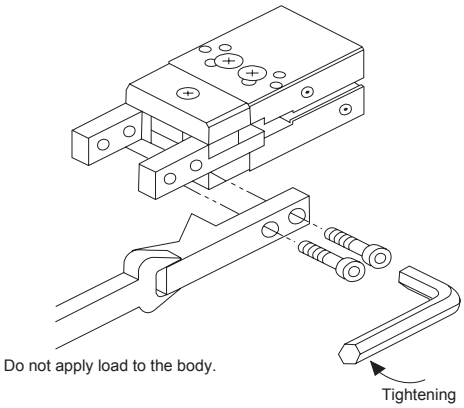

- Do not retighten or disassemble, other than the screws used for fixing the body and the attachment. This could lead to malfunction.

2. Installation

- Do not cause dents or scratches that may damage flatness or perpendicularity on the body mounting surface or finger.

- If there is a limit to the thickness direction of the FH Series body, the available piping fitting will be limited. Refer to the following fittings.

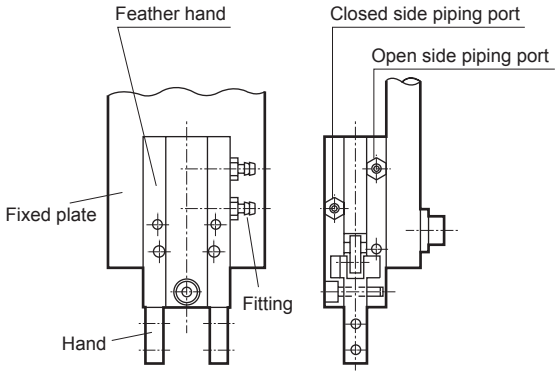

Model		FH*10	FH*12		FH*16	FH*20	FH*25
Bore size		M3			M5		
Fitting		Model No.	Applicable O.D. (mm)	Eff. X-sectional area (mm²)	Model No.	Applicable O.D. (mm)	Eff. X-sectional area (mm²)
Barbed fitting	Straight FTS 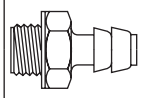	FTS4-M3	ø3.2/ø4	0.4	FTS4-M5	ø3.2/ø4	2.1
		-	-	-	FTS6-M5	ø6	4.1

- Refer to the following section for FH Series body mounting.

● Top mounting

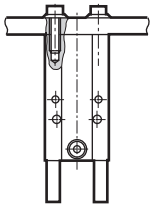

● Front mounting

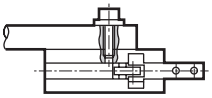

Note) For types with switch, ensure that the screw insertion depth is less than that in the table below, so that the bolt tip does not press the switch.

● Side mounting

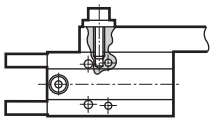

Note) Ensure that the fixed plate does not contact the finger fulcrum.

Model	Working bolt size	Max. screw insertion depth (mm)	Recommended tightening torque (N·cm)
FH*10	M3x0.5	4.5	70
FH*12	M3x0.5	4.5	70
FH*16	M4x0.7	6	160
FH*20	M5x0.8	7.5	330
FH*25	M5x0.8	12	330

● Use of through hole

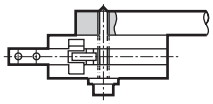

Note) Through hole cannot be used when switch is provided.
Note) Ensure that the fixed plate does not contact the finger fulcrum.

Model	Working bolt size	Recommended tightening torque (N·cm)
FH*10	M3x0.5	32
FH*12	M2.5x0.45	32
FH*16	M3x0.5	90
FH*20	M4x0.7	210
FH*25	M4x0.7	210

■ When installing the attachment, check that a lateral load is not applied to the finger.

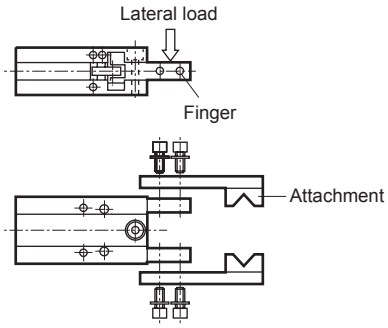

■ Tighten with the following tightening torque when mounting.

Thread nominal	M3	M4	M5	M6	M8
Recommended tightening torque (N·m)	0.59	1.4	2.8	4.8	12.0

■ Do not apply excessive load to the finger or attachment when attaching/removing or transporting the workpiece.
Scratches and dents may occur on the rolling surface of the finger linear guide, possibly causing malfunction.

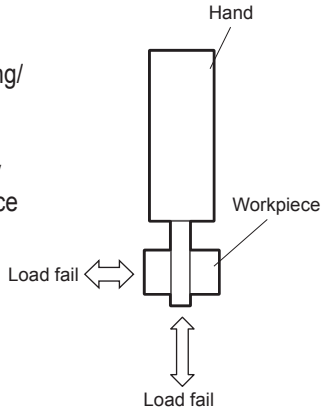

3. Linear Slide Hand LSH-HP1 Series

■ Installing the attachment
When mounting the attachment to the finger, to prevent any effect on the hand, support with a wrench, etc., when tightening so that the finger is not twisted.

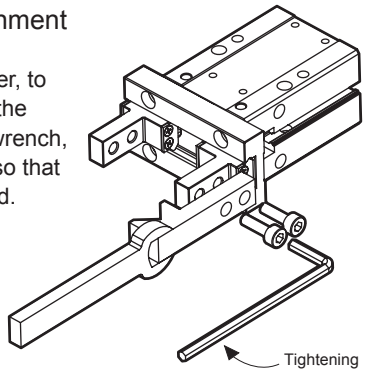

Do not apply load to the body.

Item	Bolt used	Tightening torque (N·m)
LSH-*06	M2.5x0.45	0.32
LSH*-*10	M2.5x0.45	0.32
LSH*-*16	M3x0.5	0.59
LSH*-*20	M4x0.7	1.4
LSH*-*25	M5x0.8	2.8
LSH*-*32	M6x1.0	4.9

■ Refer to the following section for body mounting.

● Top mounting

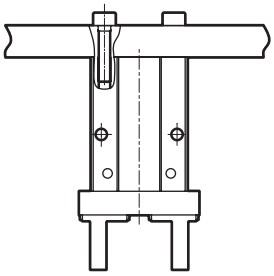

Item	Bolt used	Tightening torque (N·m)	Max. insertion depth L (mm)
LSH-*06	M3x0.5	0.59	4.5
LSH*-*10	M3x0.5	0.88	6
LSH*-*16	M4x0.7	2.1	8
LSH*-*20	M5x0.8	4.3	10
LSH*-*25	M6x1.0	7.3	12
LSH-*32	M6x1.0	7.3	13

● Front mounting

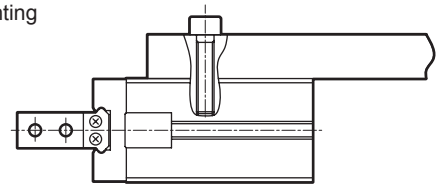

Item	Bolt used	Tightening torque (N·m)	Max. insertion depth L (mm)
LSH-*06	M3x0.5	0.88	10
LSH*-*10	M3x0.5	0.69	5
LSH*-*16	M4x0.7	2.1	8
LSH*-*20	M5x0.8	4.3	10
LSH*-*25	M6x1.0	7.3	12
LSH-*32	M6x1.0	7.3	13

● Side mounting

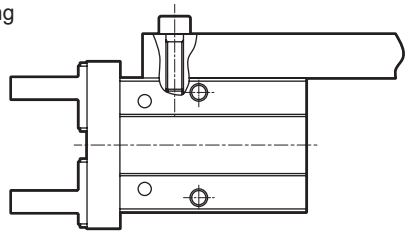

Item	Bolt used	Tightening torque (N·m)	Max. insertion depth L (mm)
LSH-*10 LSHM-*10	M3x0.5	0.88	6
LSHL-*10	M3x0.5	0.78	5.5
LSH*-*16	M4x0.7	1.6	4.5
LSH*-*20	M5x0.8	3.3	8
LSH*-*25	M6x1.0	5.9	10
LSH-*32	M6x1.0	5.9	10

● Use of through hole

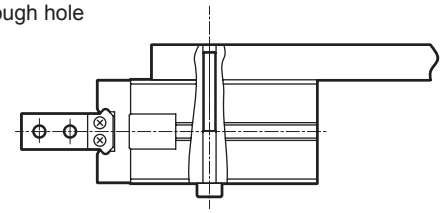

Item	Bolt used	Tightening torque (N·m)
LSH-*06	M2.5x0.45	0.32
LSH*-*10	M2.5x0.45	0.32
LSH*-*16	M3x0.5	0.88
LSH*-*20	M4x0.7	2.1
LSH*-*25	M5x0.8	4.3
LSH-*32	M5x0.8	4.3

Note) Through hole cannot be used when switch is provided.

LCM
LCR
LCG
LCW
LCX
STM
STG
STS/STL
STR2
UCA2
ULK*
JSK/M2
JSG
JSC3/JSC4
USSD
UFCD
USC
UB
JSB3
LMB
LML
HCM
HCA
LBC
CAC4
UCAC2
CAC-N
UCAC-N
RCS2
RCC2
PCC
SHC
MCP
GLC
MFC
BBS
RRC
GRC
RV3*
NHS
HRL
LN
Hand
Chuk
MecHnd/Chuk
ShkAbs
FJ
FK
SpdContr
Ending
LSH-HP
LSH
FH100
BSA2
BHA/BHG
LHA
LHAG
HAP
HKP
HCP
HGP
HLF2
HLA/HLB
HLAG/HLBG
HLC
HLD
HMF
HMF-G
HMFB
HFP
FH500
HBL
HJL
HMD
HDL
HJD
BHE

■ Regularly grease the sliding section of the finger. Regular replenishment can extend service life further.

Manufacturer	Model No.
THK	AFF grease

4. Linear Slide Hand LSHM-HP2 Series

⚠ CAUTION

■ The zero point adjustment exterior trimmer is equipped with a rubber plug to ensure water resistance. Use it with the plug attached.

■ To ensure water resistance, do not remove the cap of the correction adapter.

■ To ensure water resistance, securely tighten the M8 screw of the cable.

■ Cable connection

1. Turn power OFF before wiring this product.
2. Do not touch the mating face of the connector with wet hands.
   When wiring, wipe off any moisture adhered to connectors and peripheral parts. Failure to do so may result in insulation failure.
3. Make sure that metal chips or powder do not enter the mating part of the connector.
4. Be sure to tighten the connector fixture (M8) by hand (proper tightening torque: 0.2 Nm). Using a tool such as pliers may cause damage due to excessive load.
   If the tightening force is insufficient, the degree of protection may not be maintained, and loosening may occur due to vibration.

● Connecting the lead wire

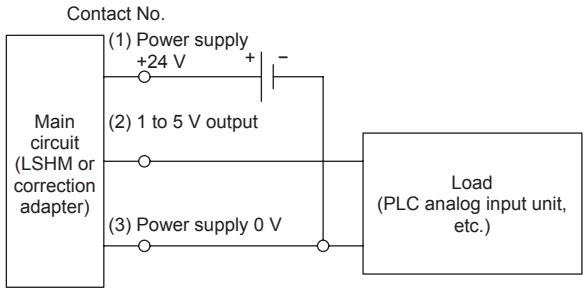

■ Use the combination of LSHM and correction adapter included at shipment.

5. Linear Slide Hand LSH Series

⚠ CAUTION

■ Installing the finger

When mounting the attachment to the finger, to prevent any effect on the hand, support with a wrench, etc., when tightening so that the finger is not twisted.

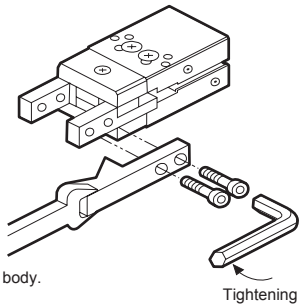

Item	Bolt used	Tightening torque (N·m)
LSH-10	M2.5 x 0.45	0.32
LSH-16	M3 x 0.5	0.59
LSH-20	M4 x 0.7	1.4
LSH-25	M5 x 0.8	2.8

■ Refer to the following section for body mounting.

● Top mounting

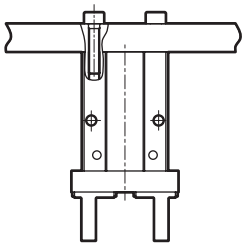

Item	Bolt used	Tightening torque (N·m)	Max. screw insertion depth L (mm)
LSH-10	M3 x 0.5	0.88	6
LSH-16	M4 x 0.7	2.1	8
LSH-20	M5 x 0.8	4.3	10
LSH-25	M6 x 1.0	7.3	12

● Front mounting

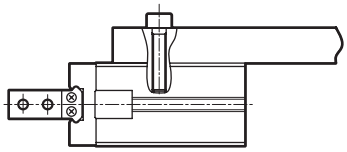

Item	Bolt used	Tightening torque (N·m)	Max. screw insertion depth L (mm)
LSH-10	M3 x 0.5	0.69	5
LSH-16	M4 x 0.7	2.1	8
LSH-20	M5 x 0.8	4.3	10
LSH-25	M6 x 1.0	7.3	12

● Side mounting

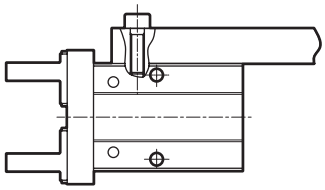

Item	Bolt used	Tightening torque (N·m)	Max. screw insertion depth L (mm)
LSH-10	M3 x 0.5	0.88	6
LSH-16	M4 x 0.7	1.6	4.5
LSH-20	M5 x 0.8	3.3	8
LSH-25	M6 x 1.0	5.9	10

● Through hole mounting

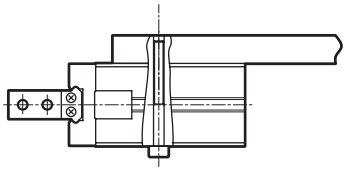

Item	Bolt used	Tightening torque (N·m)
LSH-10	M2.5 x 0.45	0.32
LSH-16	M3 x 0.5	0.88
LSH-20	M4 x 0.7	2.1
LSH-25	M5 x 0.8	4.3

Note) Through hole mounting is not possible with switch.

■ Do not retighten or disassemble, other than the screws used for fixing the body and attachment. This could lead to malfunction.

Use/maintenance

1. Common

⚠ CAUTION

■ Do not disassemble or modify the body.

■ Repeatability

Repeatability here indicates the displacement of the workpiece in the case of repeated clamping and unclamping in the same conditions (hand fixed, same workpiece used: see below).

Conditions
- Workpiece dimensions, shape, weight
- Workpiece transfer position
- Clamp method, length
- Workpiece and workpiece receiving surface resistance
- Fluctuation of gripping force (air pressure), etc.

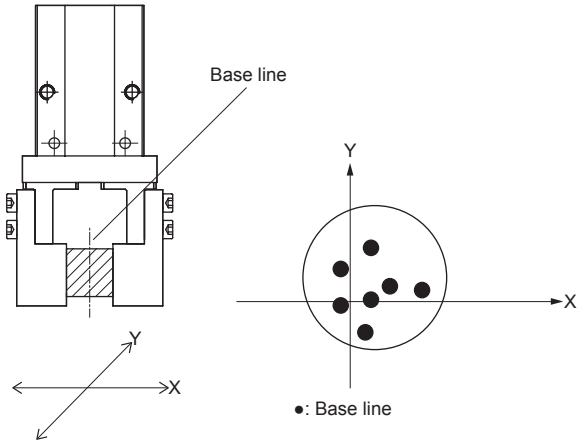

2. Linear Slide Hand LSHM-HP2 Series

⚠ CAUTION

■ Analog output voltage corresponds to the cylinder piston position. The value may fluctuate because of jig deformation and wear, etc., due to use over time. (For the hand, fluctuation is caused by finger opening and closing direction backlash and attachment deformation and wear.)
If the analog output voltage fluctuates, perform fine adjustment using the zero point adjustment exterior trimmer.

Operation procedure
Remove the attachment, etc., close the finger, remove the rubber cap mounted on the zero point adjustment exterior trimmer, rotate the trimmer, and adjust finely until the output voltage is 1 V.
Be sure to reinstall the rubber plug correctly after operation. At this time, make sure water or foreign matter does not enter.

* For models with correction adapter option, keep the correction adapter connected.

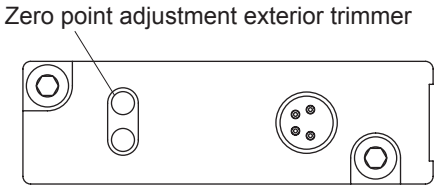

■ Repeatability of analog output

Repeatability here indicates the displacement of the analog output converted to length in the case of repeated clamping and unclamping in the same conditions (hand fixed, same workpiece used: see below).

Conditions
- Workpiece dimensions, shape, weight
- Attachment workpiece gripping position
- Clamp method, length
- Attachment and workpiece contact area resistance
- Fluctuation of gripping force (air pressure)

3. Shockless LSH-*-C

⚠ CAUTION

■ Because of changes in the cushion stiffness when left for long periods, the stroke may become slightly shorter than the standard value at the low pressure setting. Perform a trial run, such as operating several times and performing back-and-forth operation at high supply pressure.

■ Do not rapidly discharge air from the cylinder after performing low speed operation outside the catalog specifications range.
(Example: Removing piping or coupler, etc.)
Otherwise the rubber-air cushion may fall. Note that the possibility of occurrence of this may increase, especially when the air pressure is high.

MEMO

Chuck

Overview

Handles various issues with abundant product variety, including thin, lightweight, wide strokes, and high-precision, etc. Chuck series with the ultimate easy operation.

CONTENTS

Series variation 1772
- Powerful chuck (CKL2) 1774
- Powerful chuck with rubber cover (CKLG2) 1786
- Position locking powerful chuck (CKL2-*-HC) 1794
- Powerful chuck with high gripping power (CKH2) 1800
- 2-way powerful chuck (CKLB2) 1806
- 3-way jaw bearing chuck (CKG) 1814
- 3-way jaw long stroke chuck (CK) 1820
- 3-way jaw thin chuck (CKA) 1826
- Thin chuck (CKS) 1834
- Thin chuck (hollow) (CKS-F) 1844
- Hollow chuck (CKF) 1852
- Ultra long stroke chuck (CKJ) 1858

Attachment 1868

⚠ Safety precautions 1872

- Automatic hand changer (CHC) 1874

Chuck Series

LCM
LCR
LCG
LCW
LCX
STM
STG
STS/STL
STR2
UCA2
ULK*
JSK/M2
JSG
JSC3/JSC4
USSD
UFCD
USC
UB
JSB3
LMB
LML
HCM
HCA
LBC
CAC4
UCAC2
CAC-N
UCAC-N
RCS2
RCC2
PCC
SHC
MCP
GLC
MFC
BBS
RRC
GRC
RV3*
NHS
HRL
LN
Hand
Chuk
MecHnd/Chuk
ShkAbs
FJ
FK
SpdContr
Ending
CKL2
CKLG2
CKL2-HC
CKH2
CKLB2
CKG
CK
CKA
CKS
CKS-F
CKF
CKJ
CHC

	Product name	Model No.	Action of finger	Bore size (mm)	Gripping power* (N)	Stroke length (mm)	Page
3-way chuck	Powerful chuck	CKL2	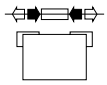	ø16 to ø100	17 to 680	5 to 40	1774
	Powerful chuck with rubber cover	CKLG2		ø20 to ø100	28 to 680	5 to 23	1786
	Position locking powerful chuck	CKL2-HC	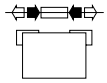	ø32 to ø80	75 to 510	8 to 20	1794
	Powerful chuck with high gripping power	CKH2	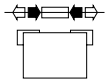	ø50 to ø100	290 to 1250	6 to 12	1800
	Bi-directional powerful chuck (parallel hand)	CKLB2	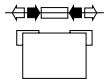	ø20 to ø100	35 to 1050	5 to 23	1806
	3-way jaw bearing chuck	CKG		ø16 to ø50	13 to 160	6 to 16	1814
	3-way jaw long stroke chuck	CK		ø25/ø44	15 to 65	20 to 40	1820
	3-way thin chuck	CKA		ø16 to ø100	4 to 600	6 to 38	1826
	Thin chuck	CKS	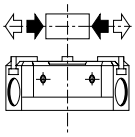	ø8 x 3 to ø32 x 3	17 to 320	10 to 32	1834
	Thin chuck (Hollow)	CKS-F	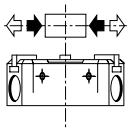	ø16 x 3 to ø50 x 3	75 to 800	16 to 50	1844
	Hollow chuck	CKF		ø30 to ø80	12 to 112	5 to 16	1852
	Ultra long stroke chuck	CKJ	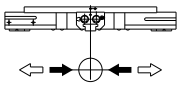	ø12 x 6 to ø50 x 6	86 to 1550	40 to 130	1858

*Gripping force is the value with air pressure of 0.5 MPa on the closed side. The actual gripping power depends on the distance from the gripping point and the finger angle. Consult each product page when making a selection.

Powerful chuck

CKL2 Series

● Operational stroke length: 5, 6, 8, 10, 12, 16, 20, 23, 30, 40 mm

Double acting

Single acting (normally open)

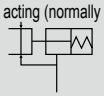

Single acting (normally closed)

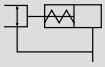

RoHS CAD

Specifications

Item	CKL2								
Size	16CS	20CS	25CS	32CS	40CS	50CS	63CS	80CS	100CS
Bore size mm	ø16	ø20	ø25	ø32	ø40	ø50	ø63	ø80	ø100
Working fluid	Compressed air								
Max. working pressure MPa	0.7 (≈100 psi, 7 bar)								
Min. working pressure MPa	0.3 (≈44 psi, 3 bar)								
Ambient temperature °C	5 (41°F) to 60 (140°F)								
Port size	M3	M5						Rc1/8	
Operating stroke length mm	5		6	8	10	12 (30)	16 (30)	20 (40)	23 (40)
Rod diameter mm	ø6		ø8	ø10	ø12	ø14	ø16		ø20
Volumetric capacity (reciprocating) cm^3	1.2	1.8	3.3	7.7	15.6	28.3	60.3	118.2	215.5
Repeatability mm	±0.01								
Weight kg	0.07	0.12	0.19	0.26	0.38	0.59	1.02	2.02	3.45
Lubrication	Not required (use turbine oil class 1 ISO VG32 if necessary for lubrication)								

*1 : Values in ( ) are for long stroke (option code L1).

Switch specifications

Item	Proximity 2-wire	Proximity 3-wire	Proximity 2-wire	Proximity 3-wire
	T2H/T2V	T3H/T3V	F2H/F2V	F3H/F3V
Applications	Dedicated for programmable controller	For programmable controller, relay	Dedicated for programmable controller	For programmable controller, relay
Output method	—	NPN output	—	NPN output
Power supply voltage	—	10 to 28 VDC	—	10 to 28 VDC
Load voltage/current	10 to 30 VDC, 5 to 20 mA (*1)	30 VDC or less, 100 mA or less	10 to 30 VDC, 5 to 20 mA	30 VDC, 50 mA or less
Indicator lamp	LED (Lit when ON)		Yellow LED (Lit when ON)	
Leakage current	1 mA or less	10 μA or less	1 mA or less	10 μA or less
Weight	1 m:18 g 3 m:49 g 5 m:80 g		1 m:10 g 3 m:29 g	

*1 : The max. load current is 20 mA at 25°C. The current is lower than 20 mA if the operating ambient temperature around the switch is higher than 25°C. (5 to 10 mA at 60°C)
*2 : The F type switch uses a bend-resistant lead wire.
*3 : Refer to Ending Page 1 for detailed switch specifications and dimensions.

How to order

Without switch (built-in magnet for switch)

CKL2 - 20CS - O

With switch (built-in magnet for switch)

CKL2 - 20CS - O - T2H - R

Ⓐ Size

Ⓑ Option
*1, *2

Ⓒ Switch model No.
*3

Ⓓ Switch quantity

Code	Description
Ⓐ Size	
16CS	
20CS	
25CS	
32CS	
40CS	
50CS	
63CS	
80CS	
100CS	

Ⓑ Option	
Blank	Standard (double acting)
O	Single acting (normally open)
C	Single acting (normally closed)
L1	Long stroke
Y1	With attachment (Material S50C)
Y2	With attachment (Material MC nylon)

Ⓒ Switch model No.

Axial lead wire	Radial lead wire	Contact	Voltage AC	Voltage DC	Display	Lead wire
F2H*	F2V*	Proximity		●	1-color display	2-wire
F3H*	F3V*	Proximity		●	1-color display	3-wire
T2H*	T2V*	Proximity		●	1-color display	2-wire
T3H*	T3V*	Proximity		●	1-color display	3-wire

*** Lead wire length**	
Blank	1 m (standard)
3	3 m (option)
5	5 m (option) *8

Ⓓ Switch quantity	
R	1 on open side
H	1 on closed side
D	2

⚠ Precautions for model No. selection

*1 : Single acting (O, C) and long stroke (L1) cannot be selected together.
*2 : For long stroke (L1), only Ⓐ Size 50CS, 63CS, 80CS, or 100CS can be selected.
*3 : For single acting (O, C) and with attachment (Y1, Y2), Ⓐ Size 16CS cannot be selected.
*4 : Attachment is commonly used for inner and outer chuck.
*5 : Refer to pages 1868 and 1869 for the dimensions and compatible model of the attachment.
When ordered as an option, three are attached at shipment.
*6 : F type switch can be selected only for Ⓐ Size 16CS.
*7 : T type switch can be selected for Ⓐ Size 20CS to 100CS.
*8 : F type switch cannot be selected.

[Example of model No.]

CKL2-20CS-O-T2H-R

Model: Powerful chuck

Ⓐ Size : 20CS
Ⓑ Option : Single acting, normally open type
Ⓒ Switch model No. : Proximity T2H switch, lead wire 1 m
Ⓓ Switch quantity : 1 on open side

How to order switch

SW - T2H

Switch model No.
(Item Ⓒ above)

Note) When the type with two switches is selected, if the model has a short operational stroke length, both switches may turn ON depending on the workpiece size.

Specifications for rechargeable battery

(Catalog No. CC-1226A)

CKL2 - ··· - P4*

● Design compatible with rechargeable battery manufacturing process.

* Contact CKD for details.

LCM
LCR
LCG
LCW
LCX
STM
STG
STS/STL
STR2
UCA2
ULK*
JSK/M2
JSG
JSC3/JSC4
USSD
UFCD
USC
UB
JSB3
LMB
LML
HCM
HCA
LBC
CAC4
UCAC2
CAC-N
UCAC-N
RCS2
RCC2
PCC
SHC
MCP
GLC
MFC
BBS
RRC
GRC
RV3*
NHS
HRL
LN
Hand
Chuk
MecHnd/Chuk
ShkAbs
FJ
FK
SpdContr
Ending
CKL2
CKLG2
CKL2-HC
CKH2
CKLB2
CKG
CK
CKA
CKS
CKS-F
CKF
CKJ
CHC

Internal structure and parts list

● CKL2-16CS to 100CS

Standard (double acting)

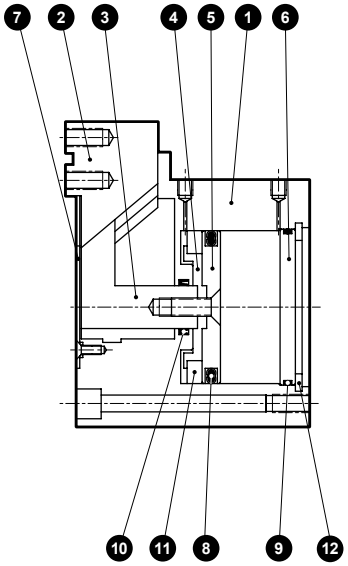

O (normally open)

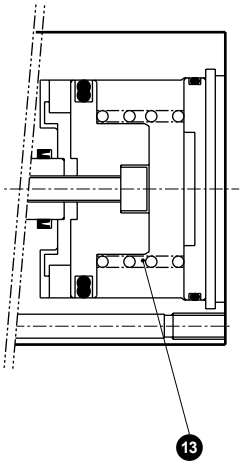

C (normally closed)

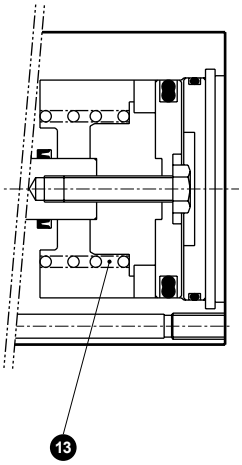

Cannot be disassembled

Parts list

No.	Part name	Material	Remarks
1	Body	Aluminum alloy	
2	Finger	Steel	
3	Piston A	Stainless steel (16 to 32CS), steel (40 to 100CS)	
4	Piston B	Aluminum alloy	
5	Piston C	Aluminum alloy	
6	Cylinder guard	Aluminum alloy	
7	Center guard	Stainless steel	
8	Piston packing	Nitrile rubber	
9	Cylinder gasket	Nitrile rubber	
10	Rod packing	Nitrile rubber	
11	Magnet		
12	Snap ring	Stainless steel (16 to 63CS), steel (80CS, 100CS)	
13	Spring	Stainless steel	

Gripping power performance data

- Gripping power represents the thrust (per one finger) in the arrow direction shown in the figure.
- The gripping power in the opening/closing directions with jaw length ℓ of hand with a supply pressure of 0.3, 0.5 and 0.7 MPa is shown.
  - ·Open direction (⇦) - - - - - (shown with broken line)
  - ·Closed direction (➡) ——— (shown with continuous line)

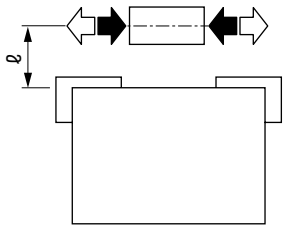

(Note) O type gripping power decreases approximately 20 to 30% in the closed direction compared to double acting.
C type gripping power decreases approximately 10 to 20% in the open direction compared to the double acting.
When making a selection, read the precautions for design and selection on page 1872.

● CKL2-16CS

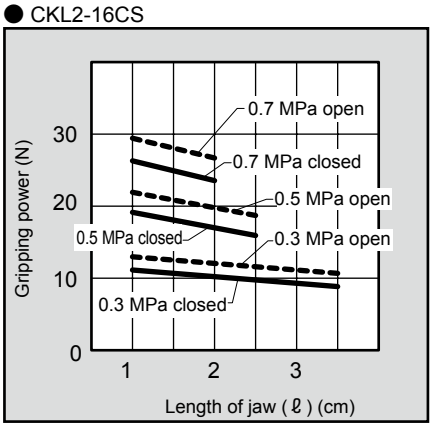

● CKL2-20CS

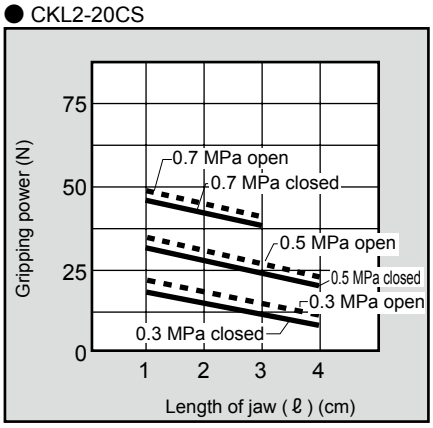

● CKL2-25CS

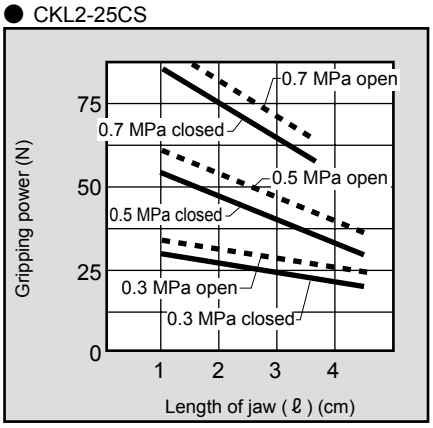

● CKL2-32CS

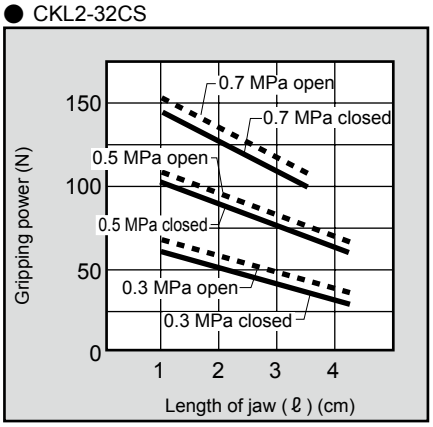

● CKL2-40CS

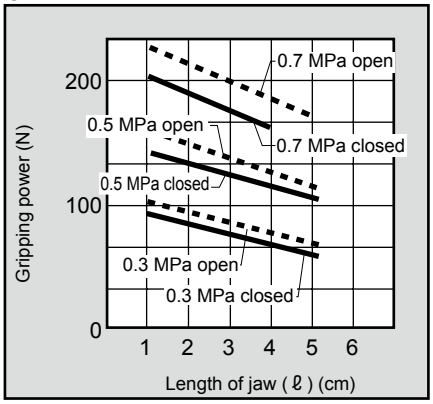

● CKL2-50CS

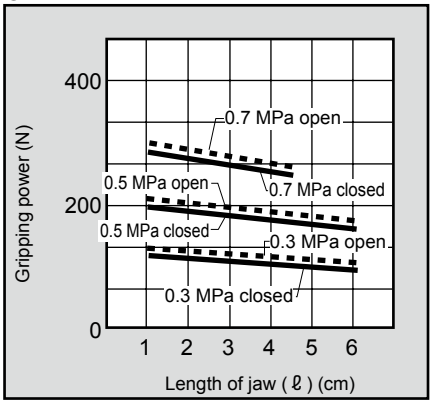

● CKL2-63CS

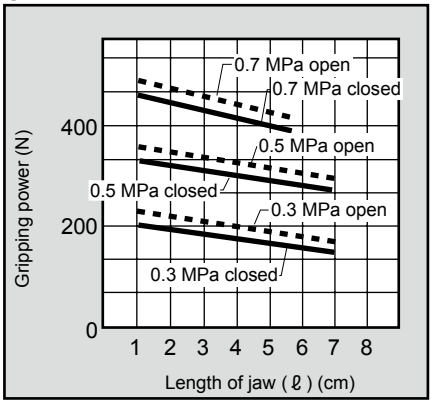

● CKL2-80CS

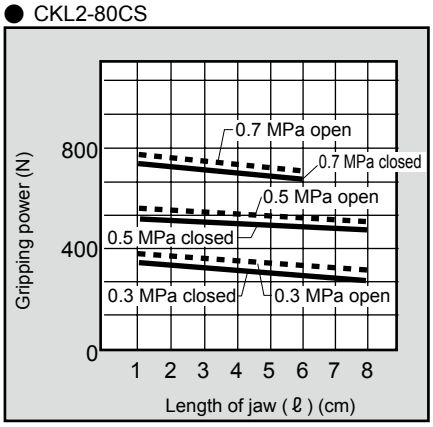

● CKL2-100CS

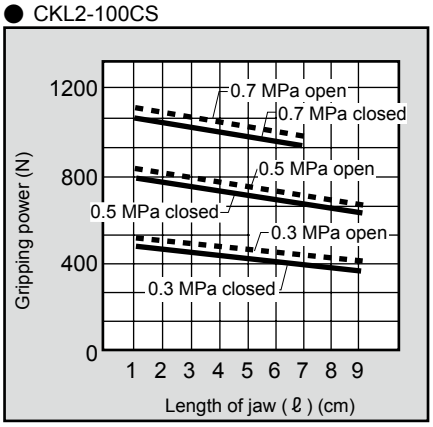

LCM
LCR
LCG
LCW
LCX
STM
STG
STS/STL
STR2
UCA2
ULK*
JSK/M2
JSG
JSC3/JSC4
USSD
UFCD
USC
UB
JSB3
LMB
LML
HCM
HCA
LBC
CAC4
UCAC2
CAC-N
UCAC-N
RCS2
RCC2
PCC
SHC
MCP
GLC
MFC
BBS
RRC
GRC
RV3*
NHS
HRL
LN
Hand
Chuk
MecHnd/Chuk
ShkAbs
FJ
FK
SpdContr
Ending
CKL2
CKLG2
CKL2-HC
CKH2
CKLB2
CKG
CK
CKA
CKS
CKS-F
CKF
CKJ
CHC

Dimensions

● CKL2-16CS standard

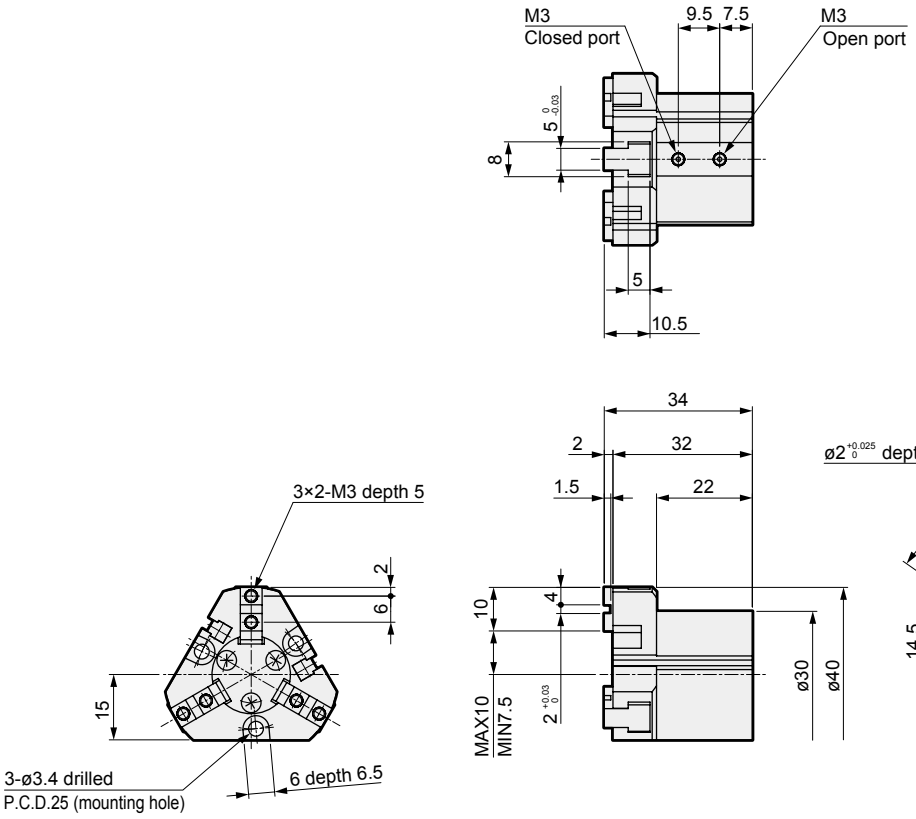

● With switch

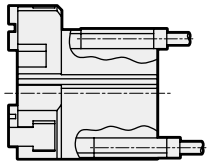

● CKL2-20CS standard/O/C

· Dimensions in ( ) are for O [normally open] and C [normally closed] specifications.

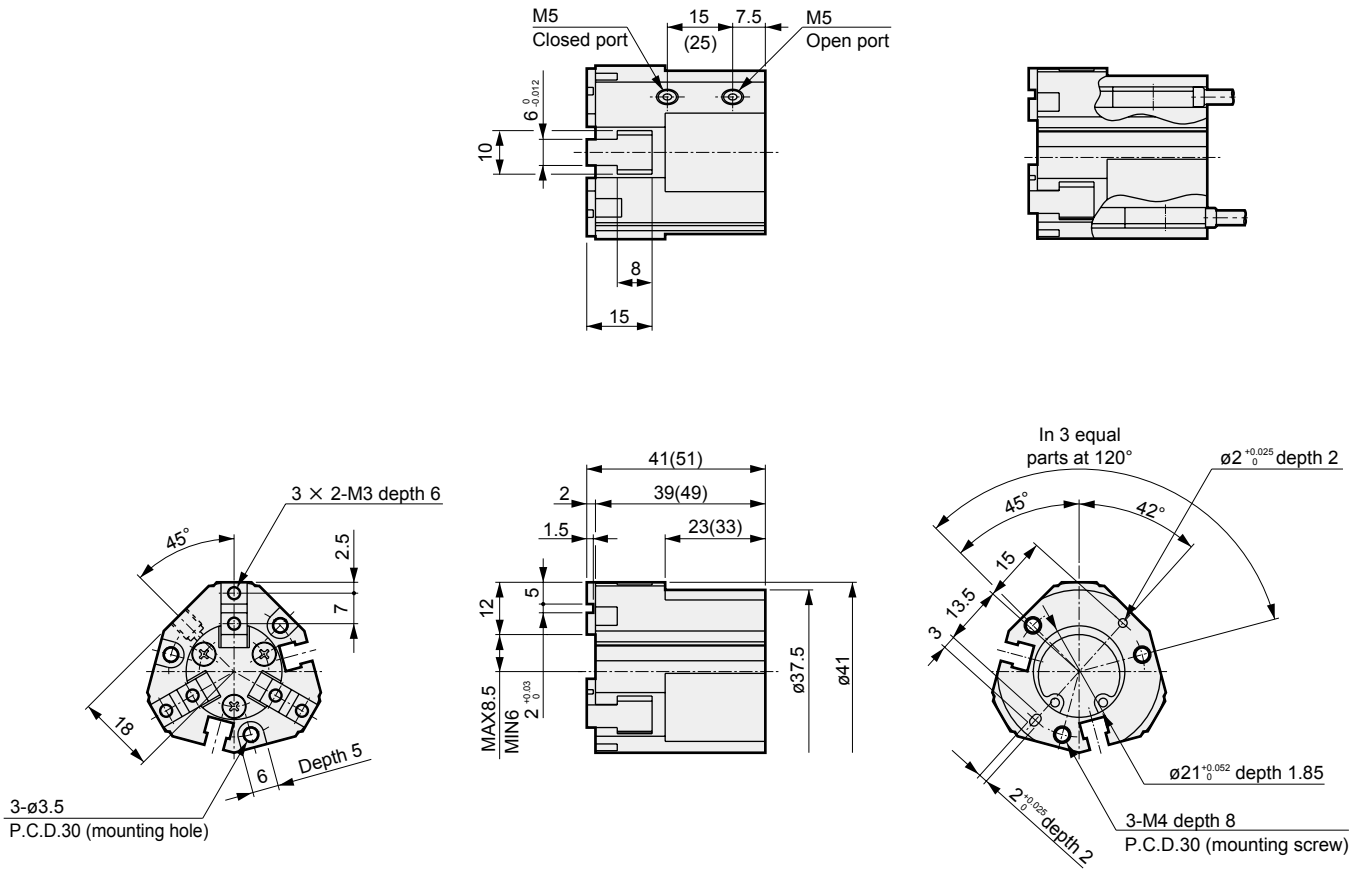

● With switch

Dimensions

● CKL2-25CS standard/O/C

· Dimensions in ( ) are for O [normally open] and C [normally closed] specifications.

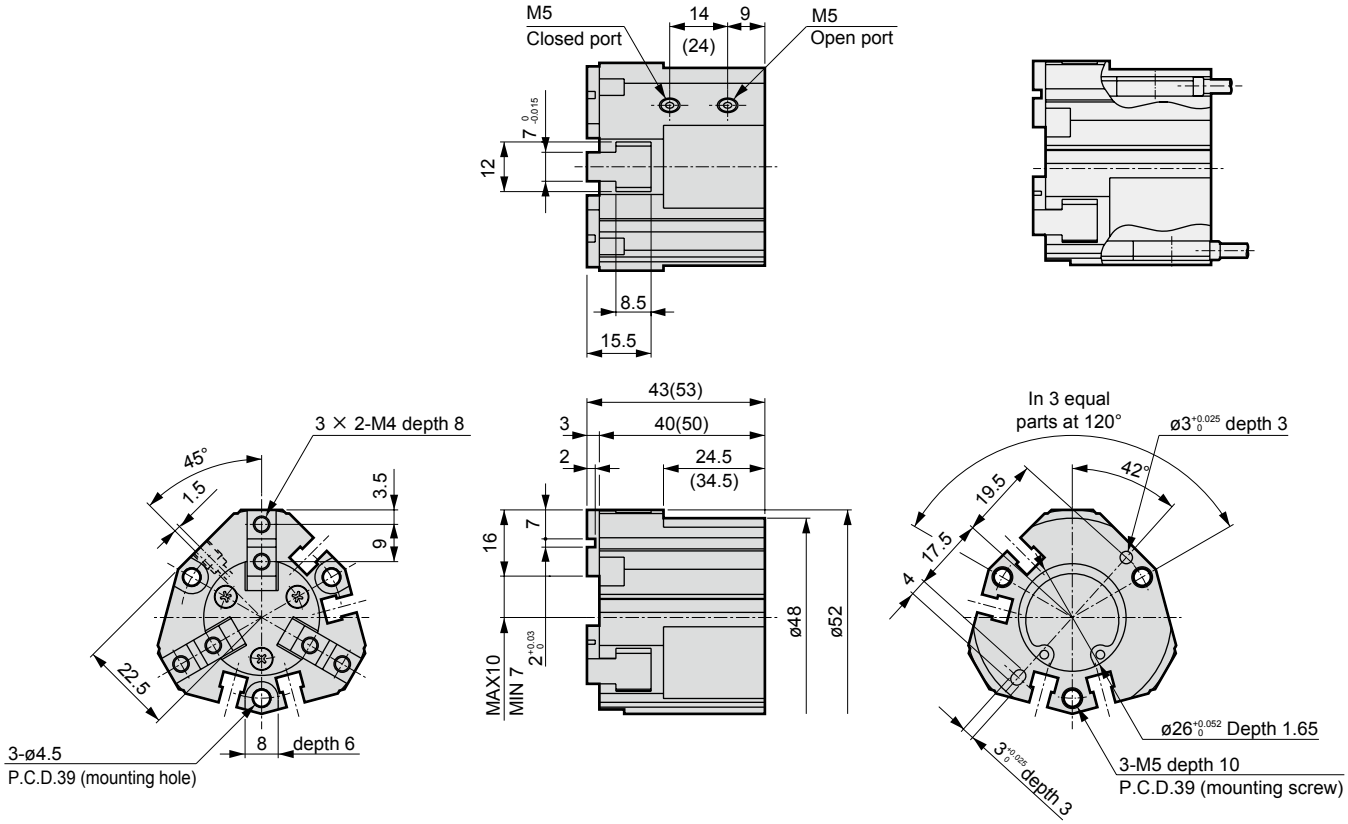

● With switch

● CKL2-32CS standard/O/C

· Dimensions in ( ) are for O [normally open] and C [normally closed] specifications.

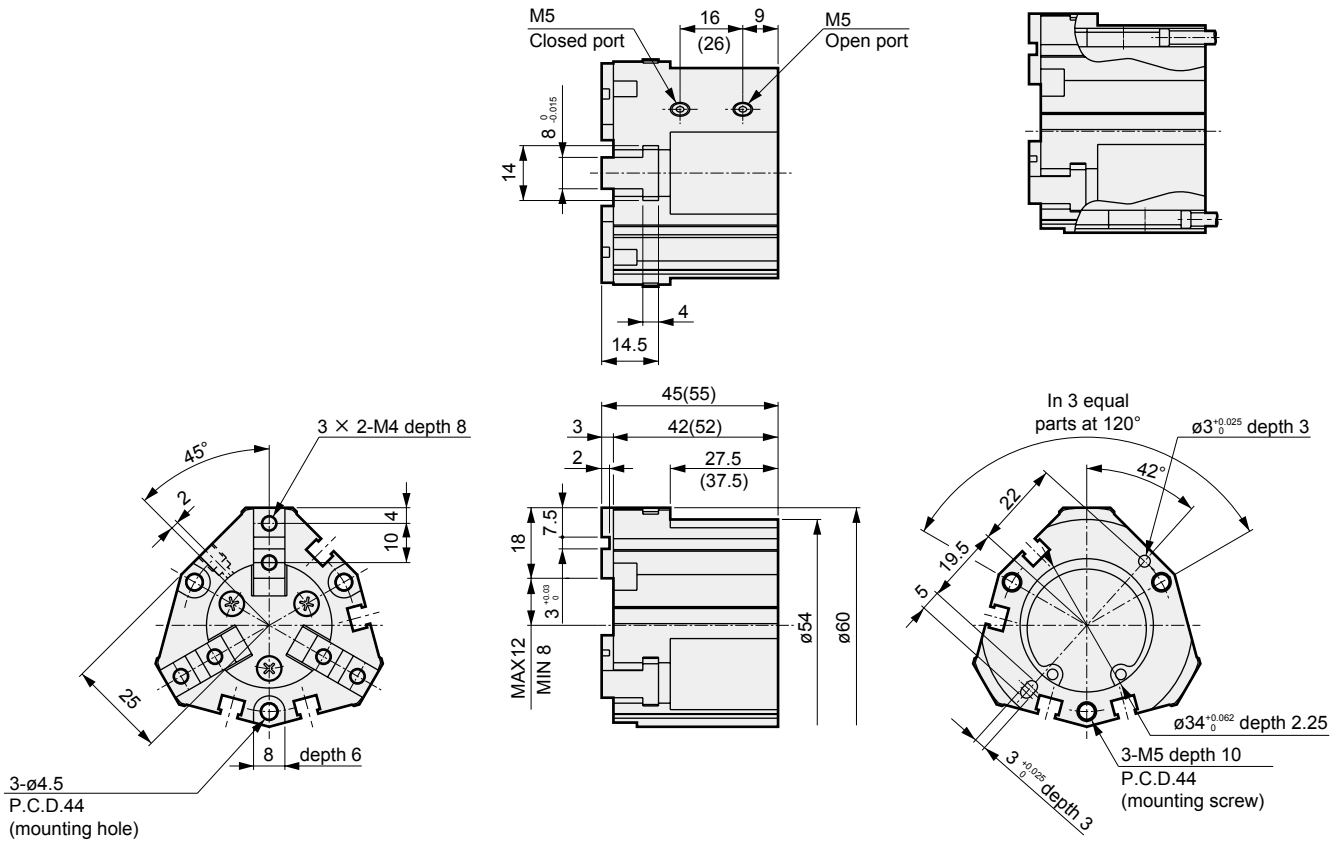

● With switch

LCM
LCR
LCG
LCW
LCX
STM
STG
STS/STL
STR2
UCA2
ULK*
JSK/M2
JSG
JSC3/JSC4
USSD
UFCD
USC
UB
JSB3
LMB
LML
HCM
HCA
LBC
CAC4
UCAC2
CAC-N
UCAC-N
RCS2
RCC2
PCC
SHC
MCP
GLC
MFC
BBS
RRC
GRC
RV3*
NHS
HRL
LN
Hand
Chuk
MecHnd/Chuk
ShkAbs
FJ
FK
SpdContr
Ending
CKL2
CKLG2
CKL2-HC
CKH2
CKLB2
CKG
CK
CKA
CKS
CKS-F
CKF
CKJ
CHC

Dimensions

● CKL2-40CS standard/O/C

· Dimensions in ( ) are for O [normally open] and C [normally closed] specifications.

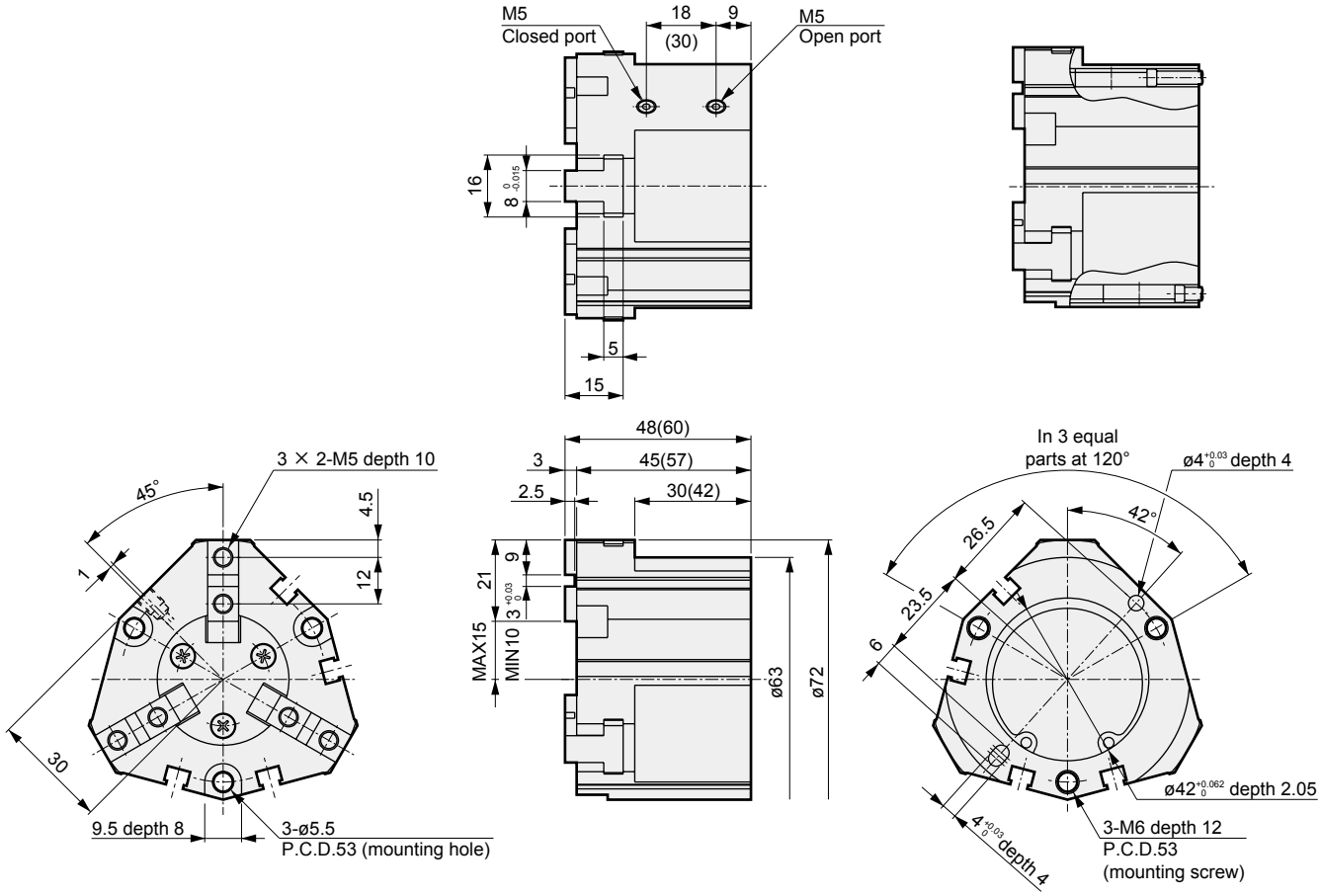

● With switch

Dimensions

● CKL2-50CS standard/O/C

· Dimensions in ( ) are for O [normally open] and C [normally closed] specifications.

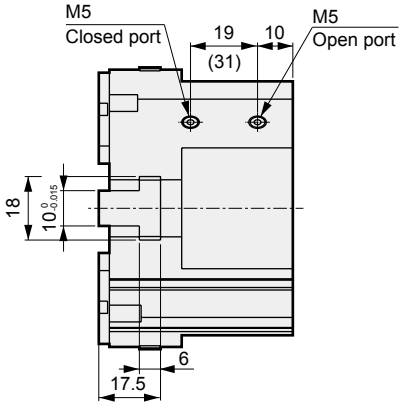

● With switch

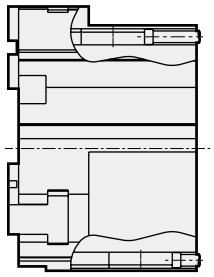

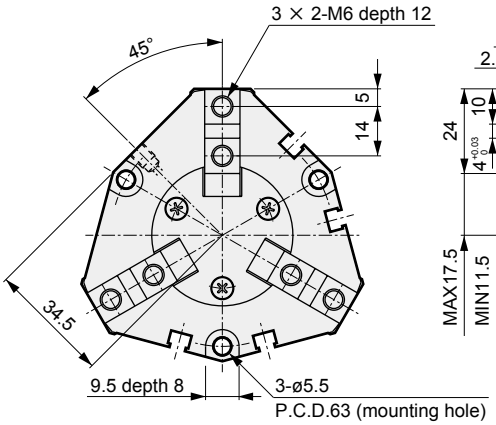

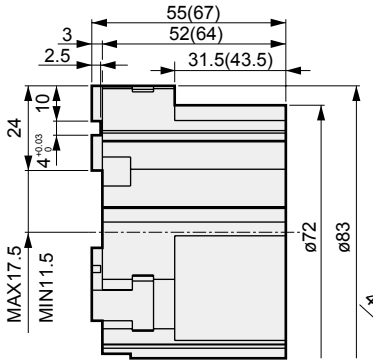

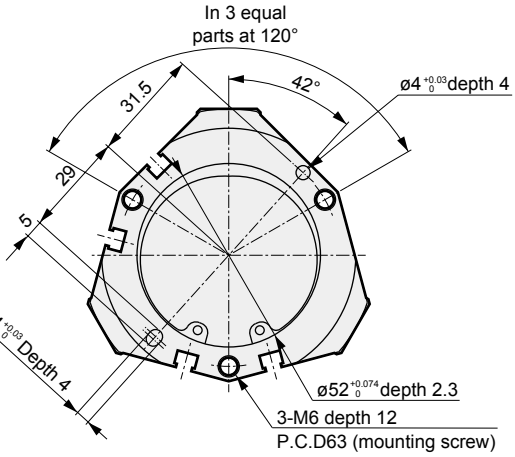

● CKL2-50CS-L1

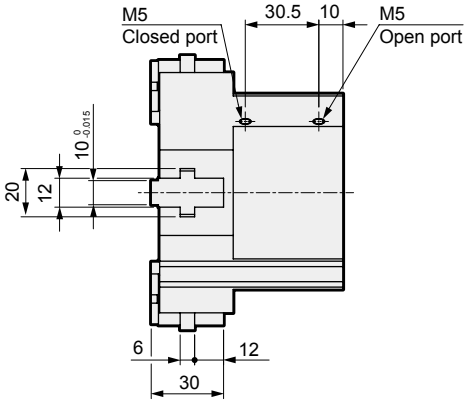

● With switch

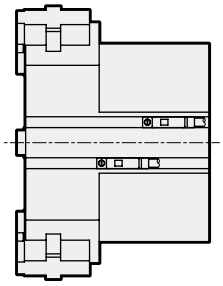

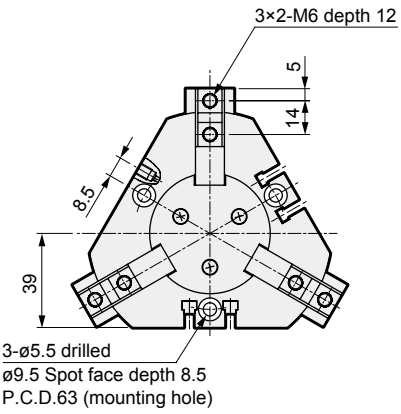

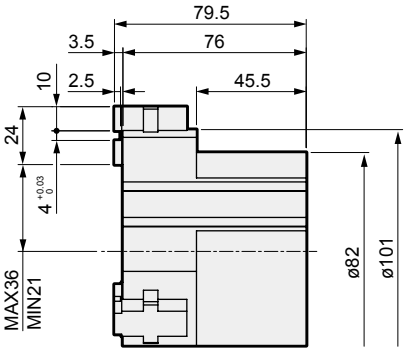

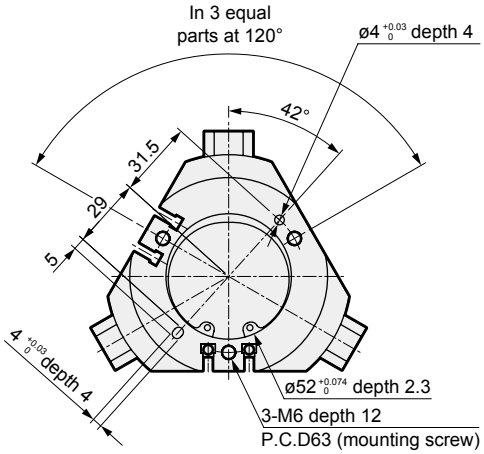

LCM
LCR
LCG
LCW
LCX
STM
STG
STS/STL
STR2
UCA2
ULK*
JSK/M2
JSG
JSC3/JSC4
USSD
UFCD
USC
UB
JSB3
LMB
LML
HCM
HCA
LBC
CAC4
UCAC2
CAC-N
UCAC-N
RCS2
RCC2
PCC
SHC
MCP
GLC
MFC
BBS
RRC
GRC
RV3*
NHS
HRL
LN
Hand
Chuk
MecHnd/Chuk
ShkAbs
FJ
FK
SpdContr
Ending
CKL2
CKLG2
CKL2-HC
CKH2
CKLB2
CKG
CK
CKA
CKS
CKS-F
CKF
CKJ
CHC

Dimensions CAD

● CKL2-63CS standard/O/C

· Dimensions in ( ) are for O [normally open] and C [normally closed] specifications.

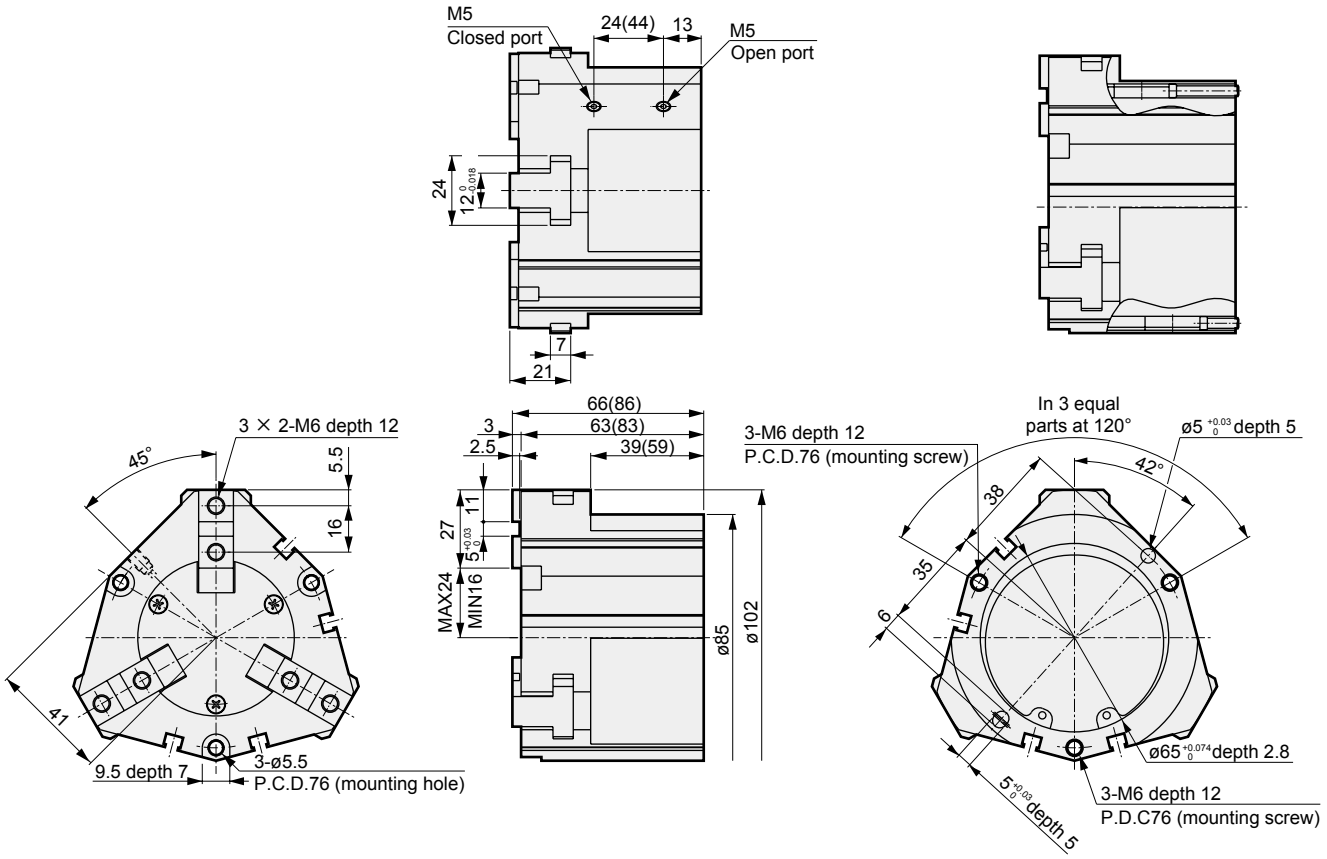

● With switch

● CKL2-63CS-L1

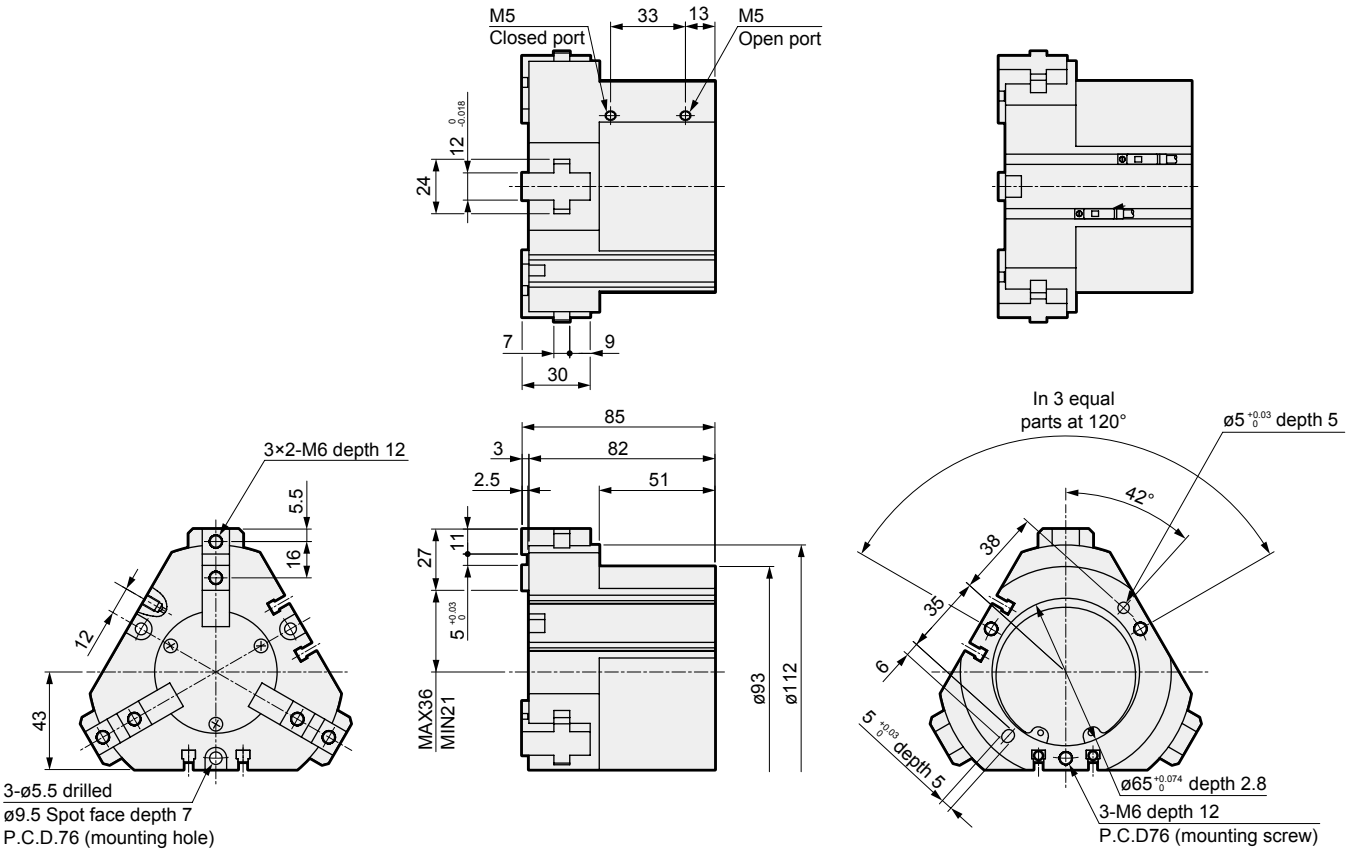

● With switch

Dimensions

● CKL2-80CS standard/O/C

· Dimensions in ( ) are for O [normally open] and C [normally closed] specifications.

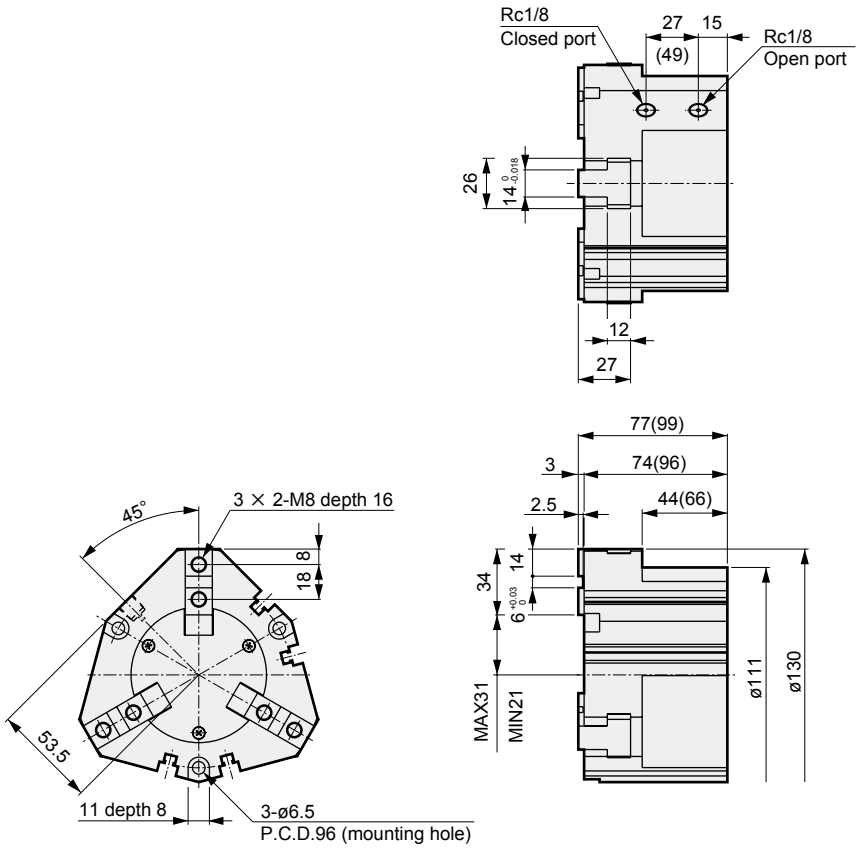

● With switch

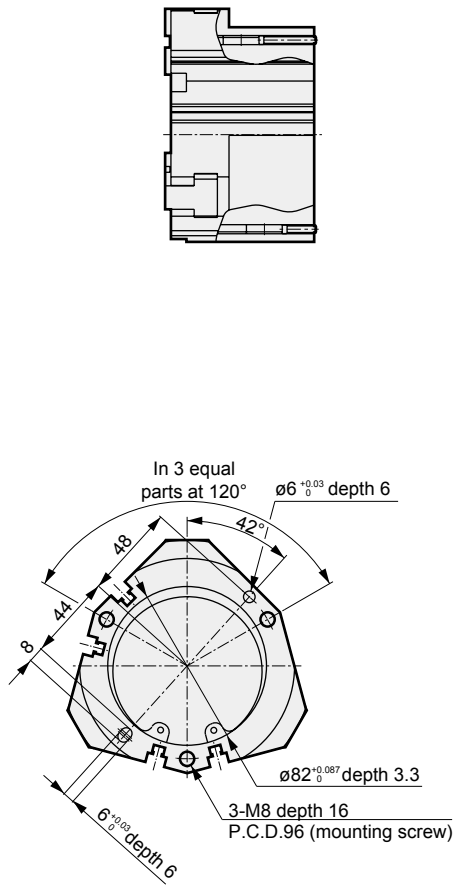

● CKL2-80CS-L1

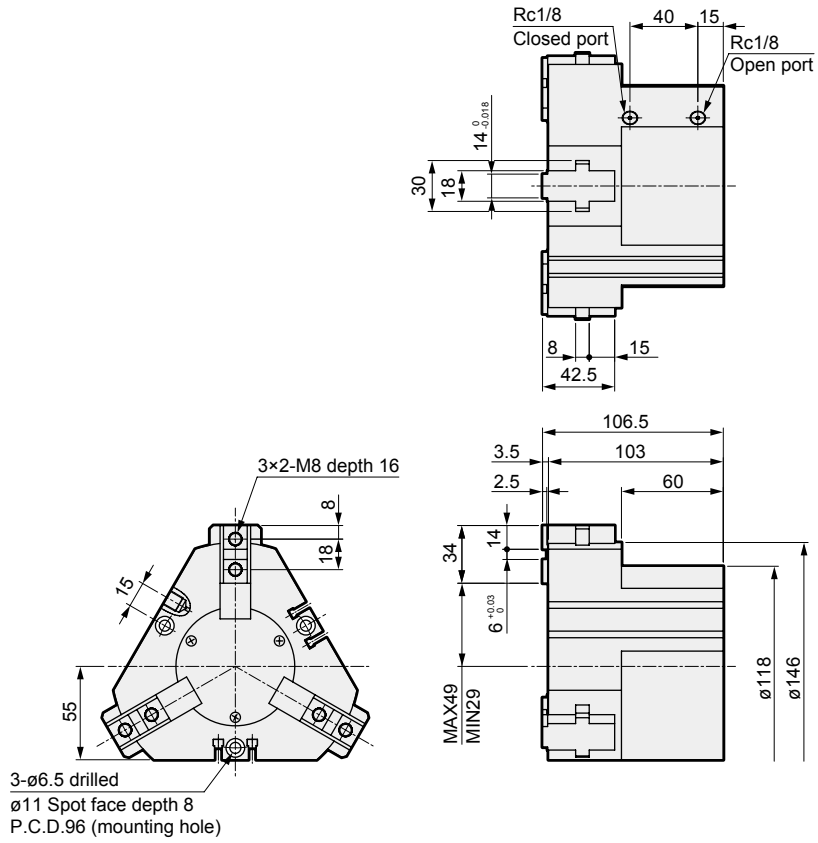

● With switch

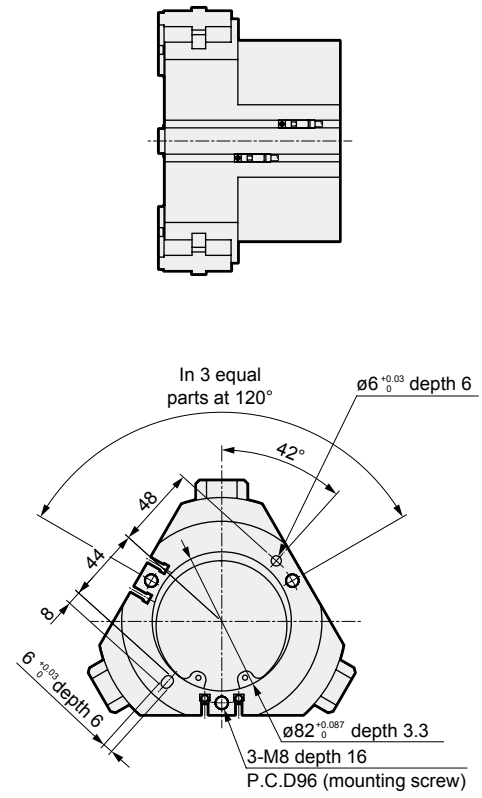

LCM
LCR
LCG
LCW
LCX
STM
STG
STS/STL
STR2
UCA2
ULK*
JSK/M2
JSG
JSC3/JSC4
USSD
UFCD
USC
UB
JSB3
LMB
LML
HCM
HCA
LBC
CAC4
UCAC2
CAC-N
UCAC-N
RCS2
RCC2
PCC
SHC
MCP
GLC
MFC
BBS
RRC
GRC
RV3*
NHS
HRL
LN
Hand
Chuk
MecHnd/Chuk
ShkAbs
FJ
FK
SpdContr
Ending
CKL2
CKLG2
CKL2-HC
CKH2
CKLB2
CKG
CK
CKA
CKS
CKS-F
CKF
CKJ
CHC

Dimensions

● CKL2-100CS standard/O/C

· Dimensions in ( ) are for O [normally open] and C [normally closed] specifications.

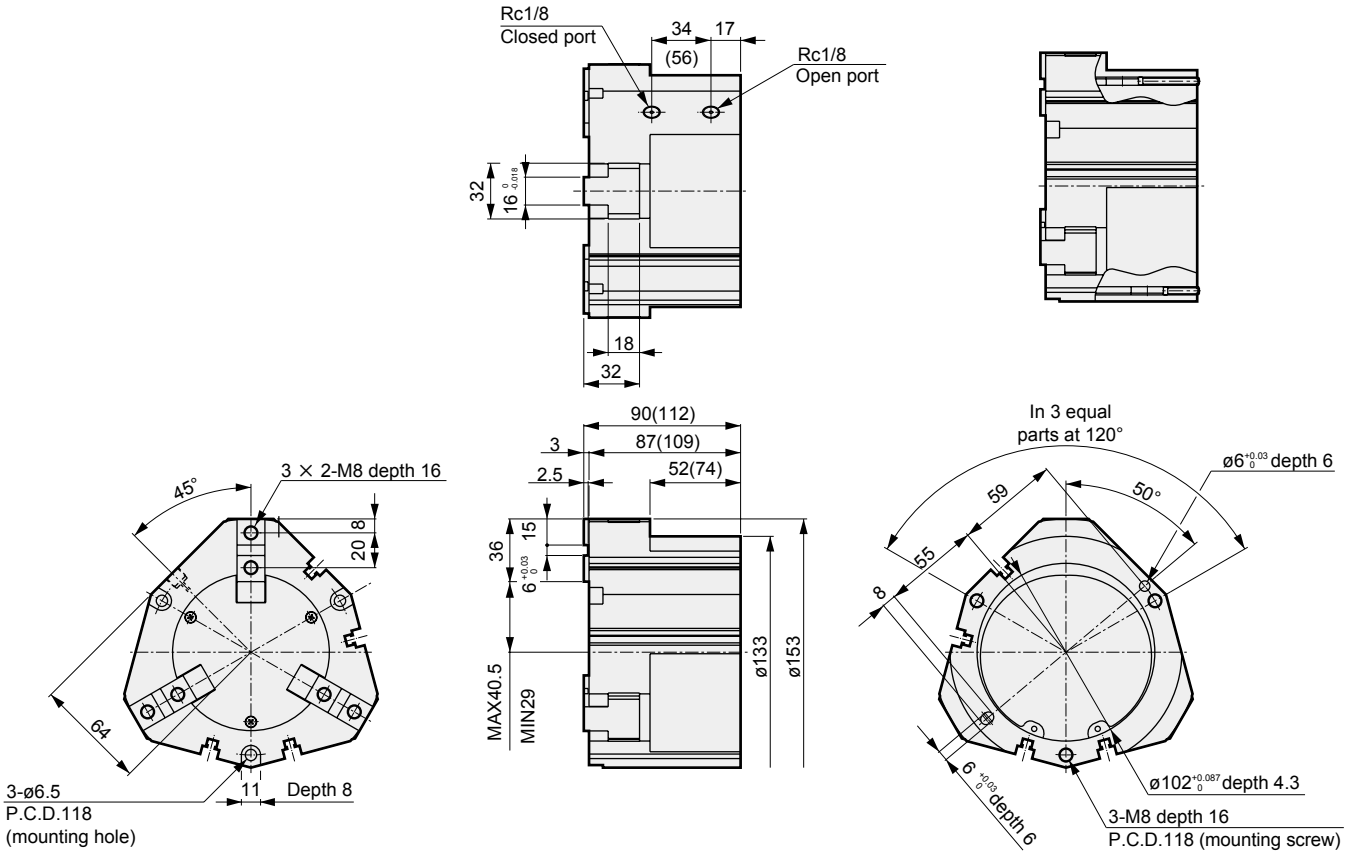

● With switch

● CKL2-100CS-L1

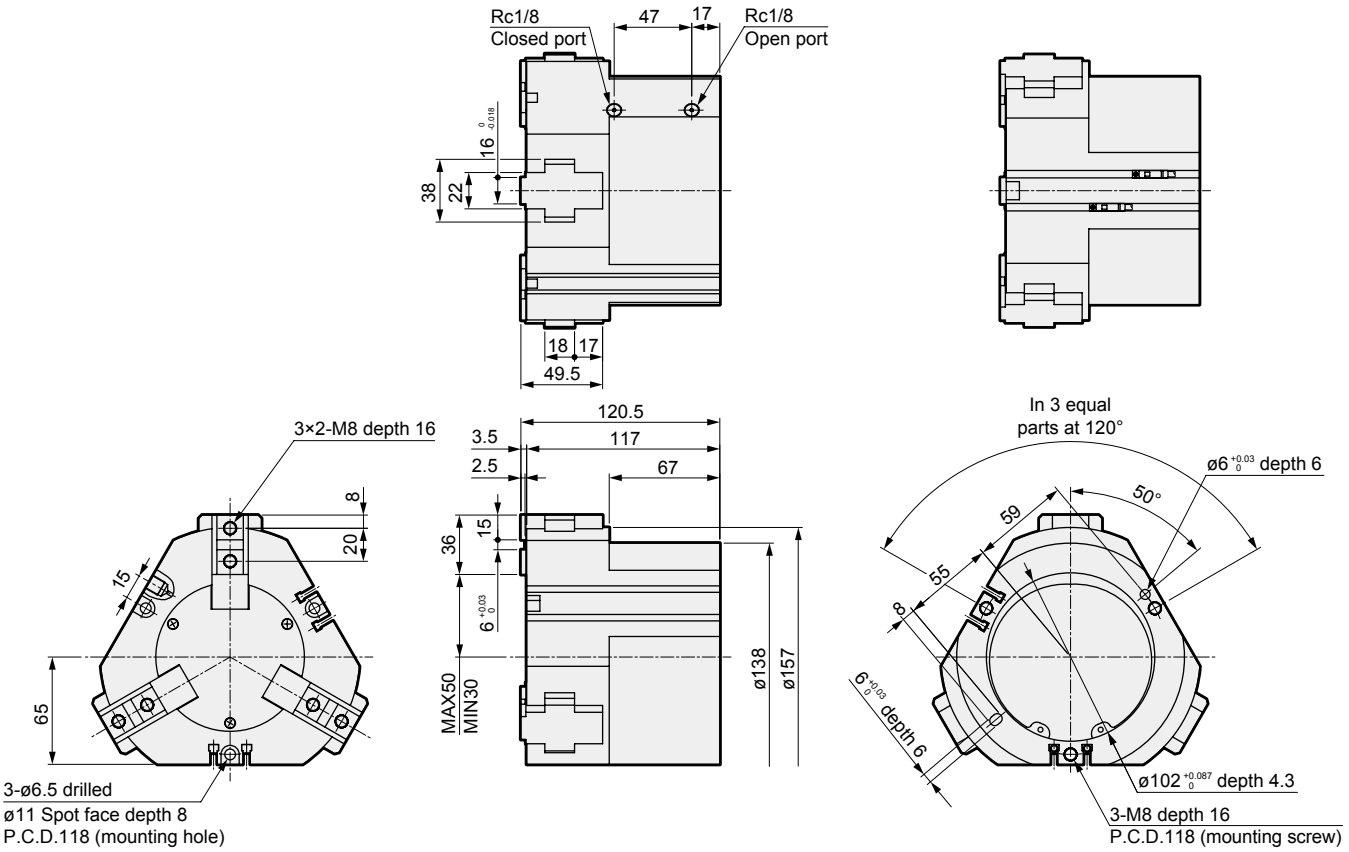

● With switch

MEMO

Powerful chuck with rubber cover

CKLG2 Series

● Operational stroke length: 5, 6, 8, 10, 12, 16, 20, 23 mm

Double acting

Single acting (normally open)

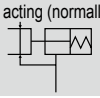

Single acting (normally closed)

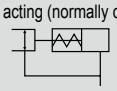

Specifications

1 MPa ≈ 145.0 psi, 1 MPa = 10 bar

Item		CKLG2							
Size		20CS	25CS	32CS	40CS	50CS	63CS	80CS	100CS
Bore size	mm	ø20	ø25	ø32	ø40	ø50	ø63	ø80	ø100
Working fluid		Compressed air							
Max. working pressure	MPa	0.7 (≈101 psi, 7 bar)							
Min. working pressure	MPa	0.3 (≈44 psi, 3 bar)							
Ambient temperature	°C	5 (41°F) to 60 (140°F)							
Port size		M5						Rc1/8	
Operating stroke length	mm	5	6	8	10	12	16	20	23
Rod diameter	mm	ø6	ø8	ø10	ø12	ø14	ø16		ø20
Volumetric capacity (reciprocating)	cm^3	1.8	3.3	7.7	15.6	28.3	60.3	118.2	215.5
Repeatability	mm	±0.01							
Weight kg	Standard	0.14	0.21	0.27	0.40	0.60	1.13	2.02	3.38
	O: Single acting normally open	0.17	0.25	0.33	0.52	0.71	1.30	2.59	4.00
	C: Single acting normally closed	0.17	0.25	0.33	0.52	0.71	1.39	2.71	4.10
Lubrication		Not required (use turbine oil class 1 ISO VG32 if necessary for lubrication)							

Switch specifications

Item	Proximity 2-wire	Proximity 3-wire
	T2H/V	T3H/V
Applications	Dedicated for programmable controller	For programmable controller, relay
Output method	–	NPN output
Power supply voltage	–	10 to 28 VDC
Load voltage/current	10 to 30 VDC, 5 to 20 mA (*1)	30 VDC or less, 100 mA or less
Display lamp	LED (Lit when ON)	
Leakage current	1 mA or less	10 μA or less
Weight	1 m: 18 g 3 m: 49 g 5 m: 80 g	

*1 : The above max. load current is 20 mA at 25°C.
The current is lower than 20 mA if the operating ambient temperature around the switch is higher than 25˚C. (5 to 10 mA at 60˚C)

*2 : Refer to Ending Page 1 for detailed switch specifications and dimensions.

How to order

Without switch (built-in magnet for switch)

CKLG2 - 20CS - O

With switch (built-in magnet for switch)

CKLG2 - 20CS - O - T2H - R

Ⓐ Size

Ⓑ Option*1, *2

Ⓒ Switch model No.

Ⓓ Switch quantity

Code	Description
Ⓐ Size	
20CS	
25CS	
32CS	
40CS	
50CS	
63CS	
80CS	
100CS	

Ⓑ Option	
Blank	Standard (double acting)
O	Single acting (normally open)
C	Single acting (normally closed)
Y1	With attachment (S50C)
Y2	With attachment (MC nylon)

Ⓒ Switch model No.

Lead wire Straight	Lead wire Radial	Contact	Voltage AC	Voltage DC	Display	Lead wire
T2H*	**T2V***	Proximity		●	1-color display	2-wire
T3H*	**T3V***			●		3-wire

*** Lead wire length**	
Blank	1 m (standard)
3	3 m (option)
5	5 m (option)

Ⓓ Switch quantity	
R	1 on open side
H	1 on closed side
D	2

⚠ Precautions for model No. selection

*1: Attachment is commonly used for internal and external diameter chuck.
*2: Refer to pages 1868 and 1869 for the dimensions and compatible models of the attachment.
When ordered as an option, three are included at shipment.

[Example of model No.]

CKLG2-20CS-O-T2H-R

Model: Powerful chuck

Ⓐ Size : 20CS
Ⓑ Option : Single acting, normally open
Ⓒ Switch model No. : Proximity T2H switch, lead wire 1 m
Ⓓ Switch quantity : One on open side

How to order switch

SW - T2H

Switch model No.
(Item Ⓒ above)

Note) When the type with two switches is selected, if the model has a short operational stroke length, both switches may turn ON depending on the workpiece size.

Internal structure and parts list

● CKLG2-20CS to 100CS

Standard (double acting)

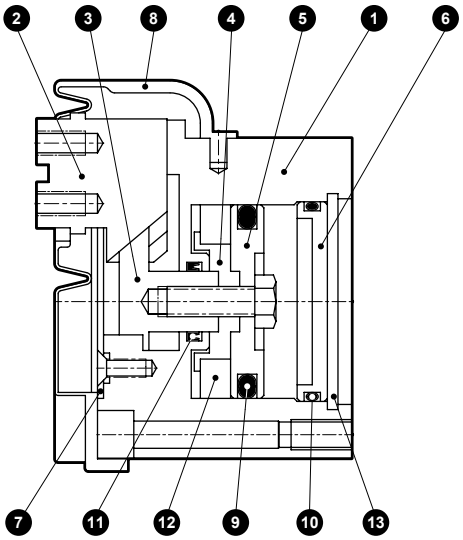

O (normally open)

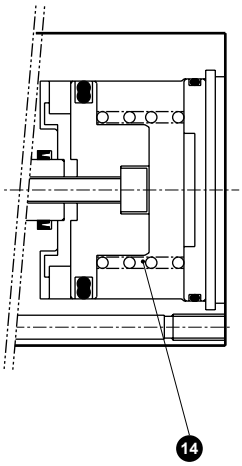

C (normally closed)

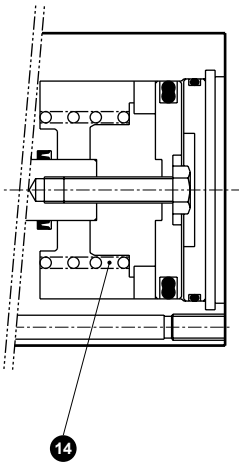

Cannot be disassembled

Parts list

No.	Part name	Material	Remarks	No.	Part name	Material	Remarks
1	Body	Aluminum alloy		8	Rubber cover	Nitrile rubber	
2	Finger	Steel		9	Piston packing	Nitrile rubber	
3	Piston A	Stainless steel (20CS to 32CS), Steel (40CS to 100CS)		10	Cylinder gasket	Nitrile rubber	
				11	Rod packing	Nitrile rubber	
4	Piston B	Aluminum alloy		12	Magnet		
5	Piston C	Aluminum alloy		13	C-snap ring	Stainless steel (20CS to 63CS) Steel (80CS, 100CS)	
6	Cylinder guard	Aluminum alloy					
7	Center guard	Stainless steel		14	Spring	Stainless steel	

Gripping power performance data

- Gripping power represents the thrust (per one finger) in the arrow direction shown in the figure.
- The gripping power in the opening/closing directions with finger length ℓ of the hand with a supply pressure of 0.3, 0.5 and 0.7 MPa is shown.
  - Open direction (⇦) – – – – – (shown with broken line)
  - Closed direction (➡) ———— (shown with continuous line)

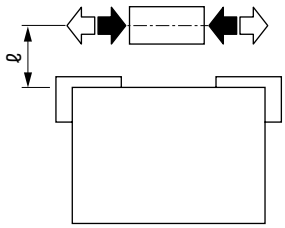

(Note) O type gripping power decreases approximately 20 to 30% in the closed direction compared to double acting.
C type gripping power decreases approximately 10 to 20% in the open direction compared to double acting.
For selection, see page 1872 for design and selection precautions.

● CKLG2-20CS

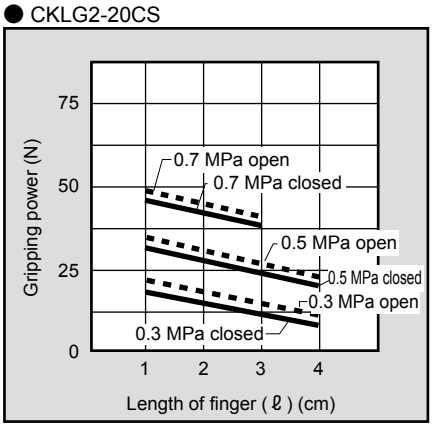

● CKLG2-25CS

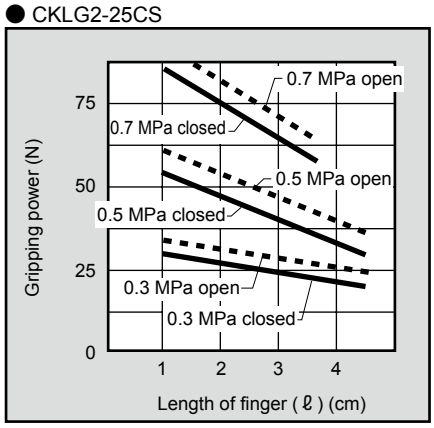

● CKLG2-32CS

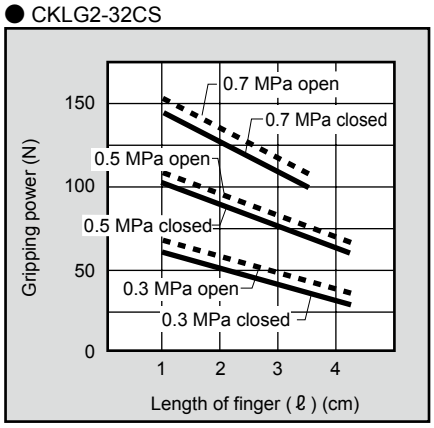

● CKLG2-40CS

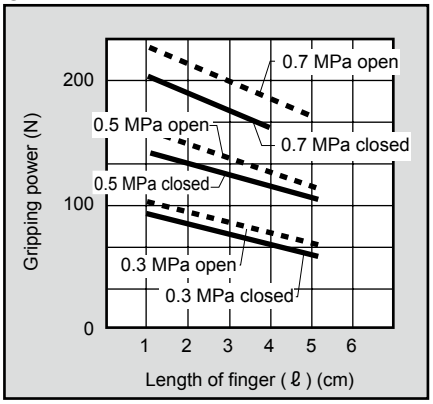

● CKLG2-50CS

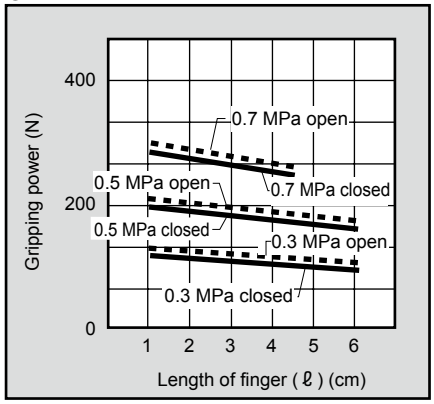

● CKLG2-63CS

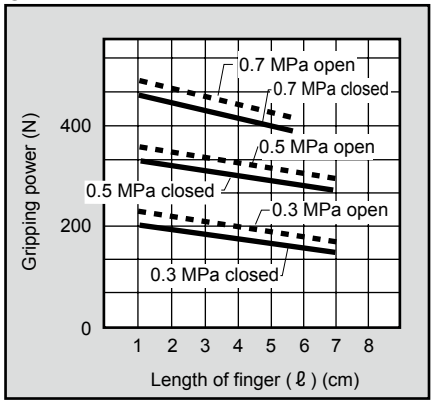

● CKLG2-80CS

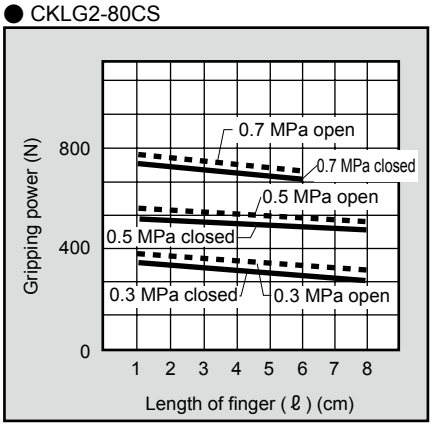

● CKLG2-100CS

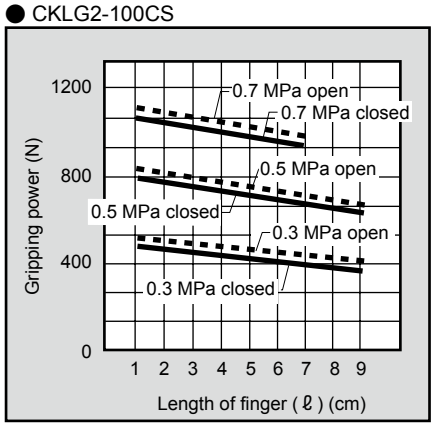

LCM
LCR
LCG
LCW
LCX
STM
STG
STS/STL
STR2
UCA2
ULK*
JSK/M2
JSG
JSC3/JSC4
USSD
UFCD
USC
UB
JSB3
LMB
LML
HCM
HCA
LBC
CAC4
UCAC2
CAC-N
UCAC-N
RCS2
RCC2
PCC
SHC
MCP
GLC
MFC
BBS
RRC
GRC
RV3*
NHS
HRL
LN
Hand
Chuk
MecHnd/Chuk
ShkAbs
FJ
FK
SpdContr
Ending
CKL2
CKLG2
CKL2-HC
CKH2
CKLB2
CKG
CK
CKA
CKS
CKS-F
CKF
CKJ
CHC

Dimensions

● CKLG2-20CS

· Dimensions in ( ) are for O [normally open] and C [normally closed] specifications.

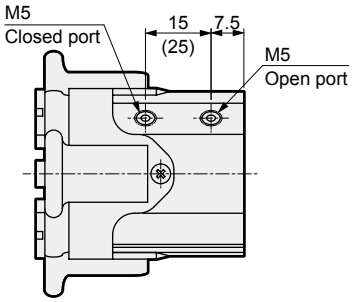

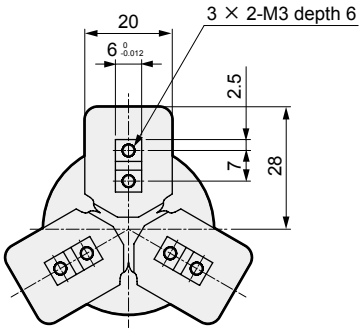

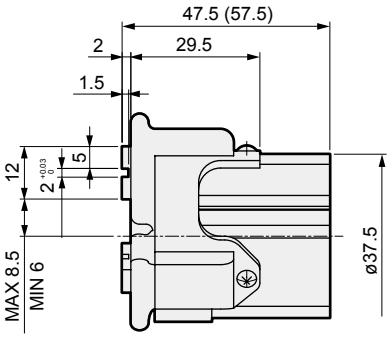

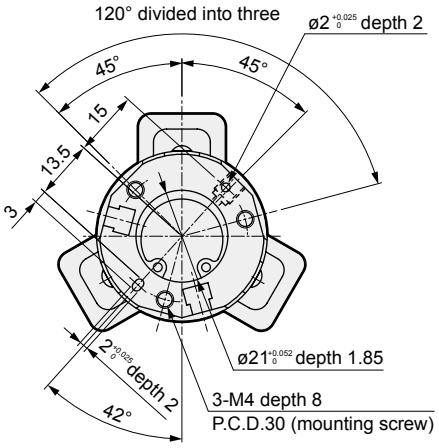

● CKLG2-25CS

· Dimensions in ( ) are for O [normally open] and C [normally closed] specifications.

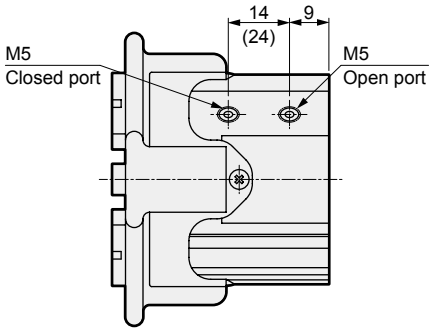

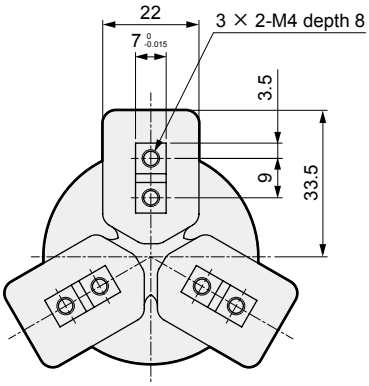

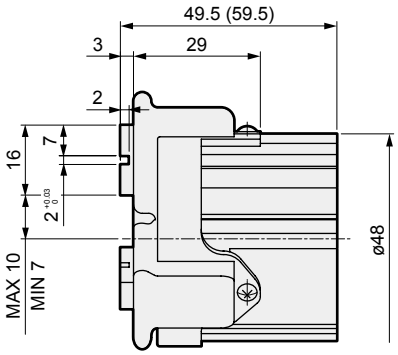

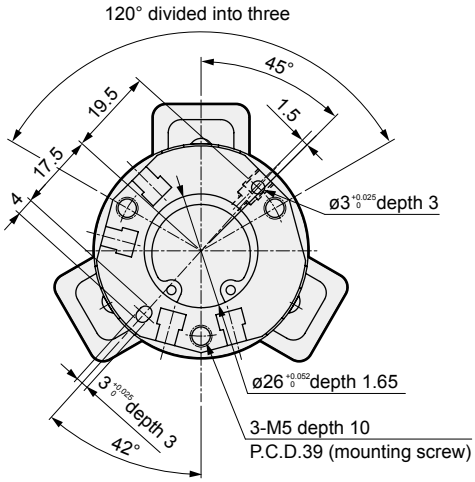

Dimensions

● CKLG2-32CS

· Dimensions in ( ) are for O [normally open] and C [normally closed] specifications.

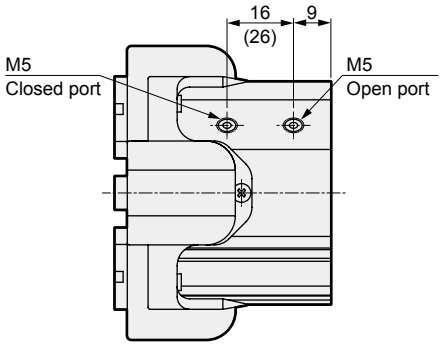

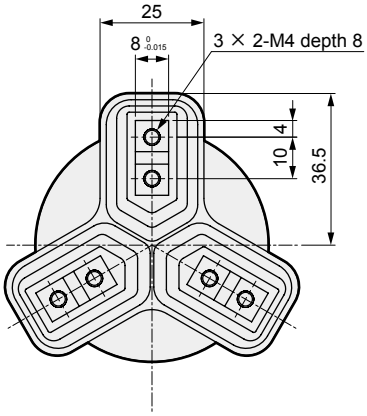

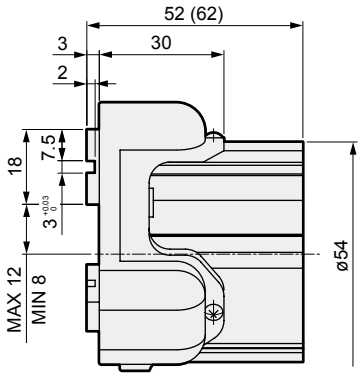

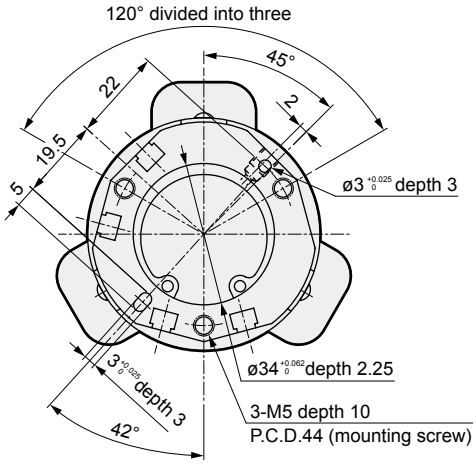

● CKLG2-40CS

· Dimensions in ( ) are for O [normally open] and C [normally closed] specifications.

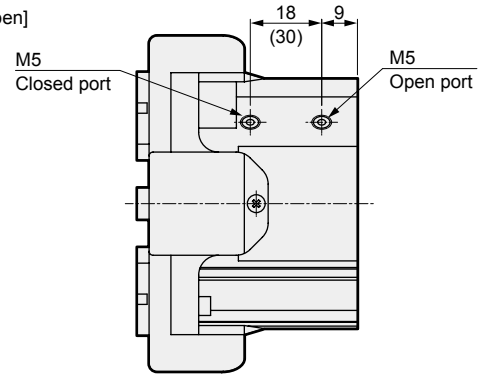

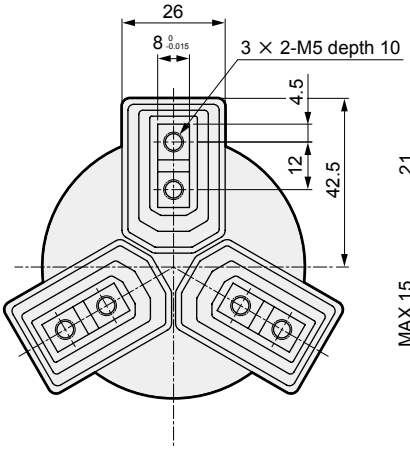

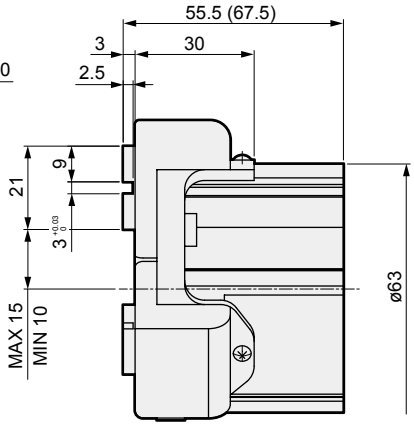

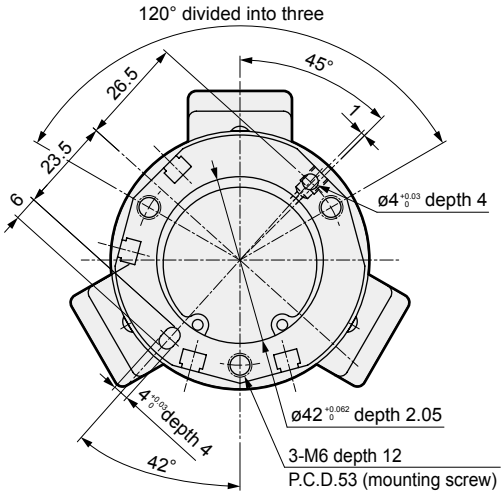

LCM
LCR
LCG
LCW
LCX
STM
STG
STS/STL
STR2
UCA2
ULK*
JSK/M2
JSG
JSC3/JSC4
USSD
UFCD
USC
UB
JSB3
LMB
LML
HCM
HCA
LBC
CAC4
UCAC2
CAC-N
UCAC-N
RCS2
RCC2
PCC
SHC
MCP
GLC
MFC
BBS
RRC
GRC
RV3*
NHS
HRL
LN
Hand
Chuk
MecHnd/Chuk
ShkAbs
FJ
FK
SpdContr
Ending
CKL2
CKLG2
CKL2-HC
CKH2
CKLB2
CKG
CK
CKA
CKS
CKS-F
CKF
CKJ
CHC

Dimensions

● CKLG2-50CS

· Dimensions in ( ) are for O [normally open] and C [normally closed] specifications.

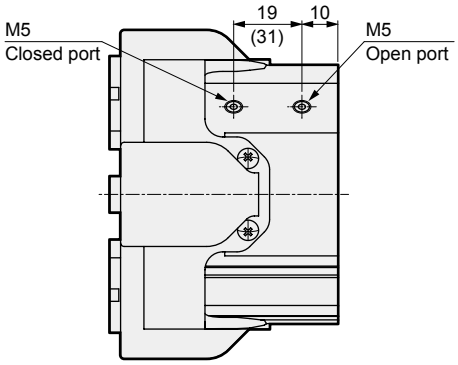

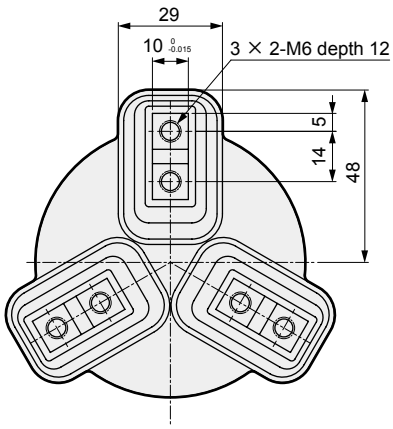

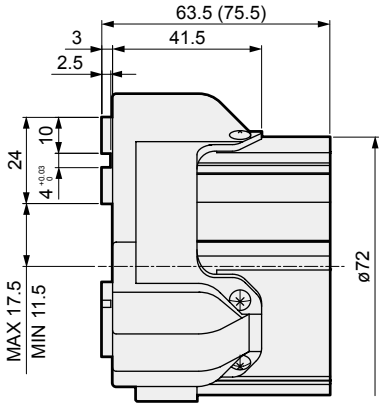

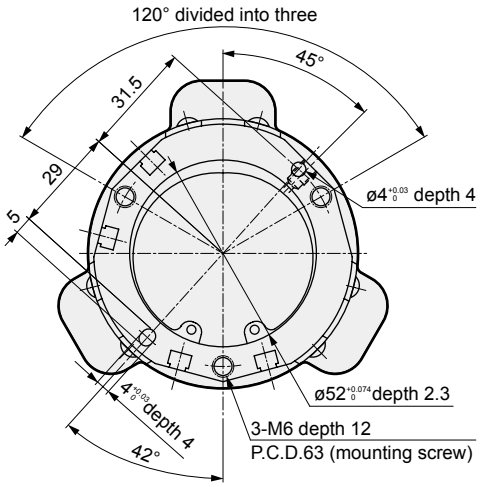

● CKLG2-63CS

· Dimensions in ( ) are for O [normally open] and C [normally closed] specifications.

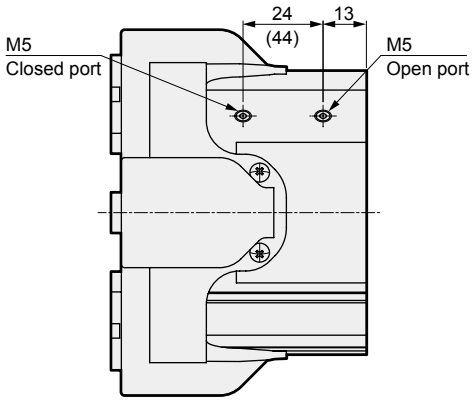

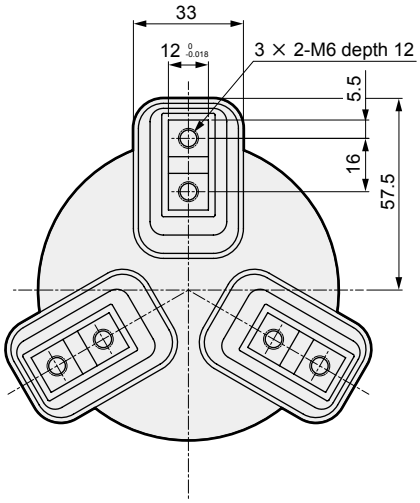

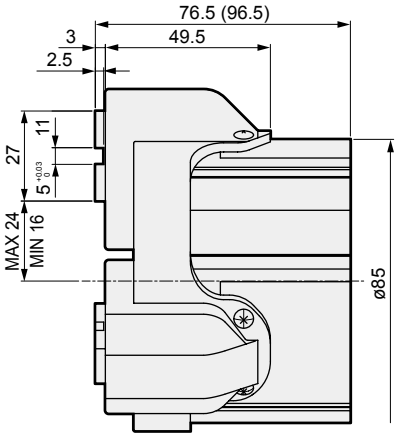

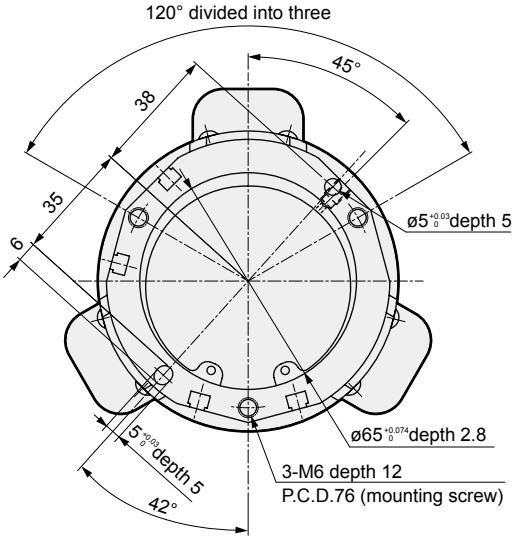

Dimensions

● CKLG2-80CS

· Dimensions in ( ) are for O [normally open] and C [normally closed] specifications.

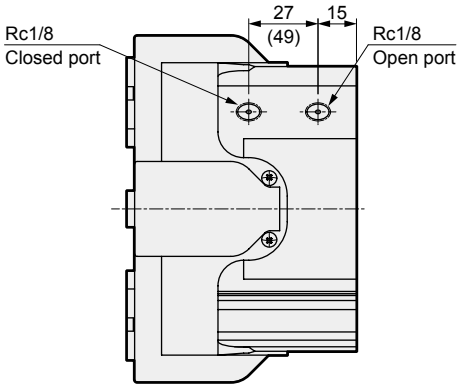

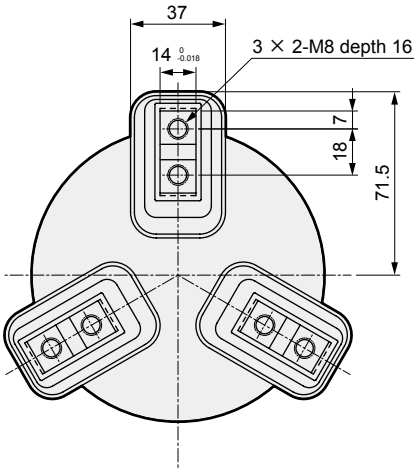

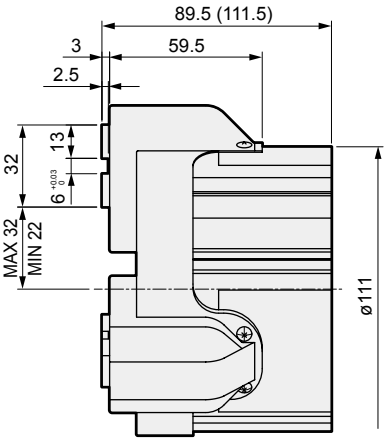

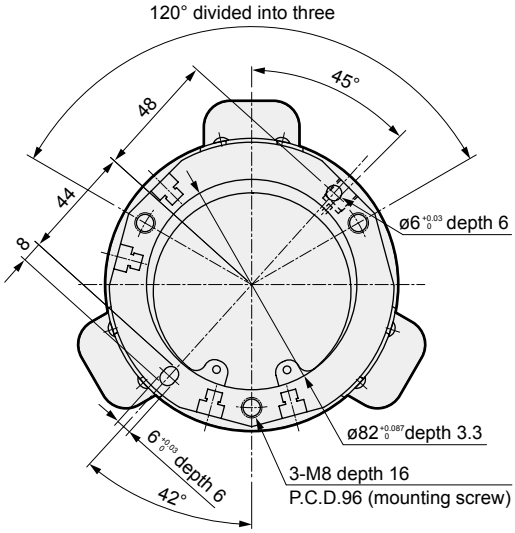

● CKLG2-100CS

· Dimensions in ( ) are for O [normally open] and C [normally closed] specifications.

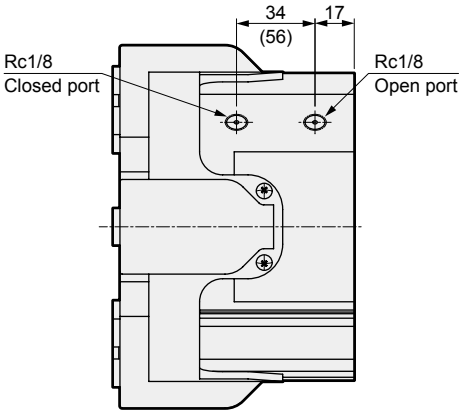

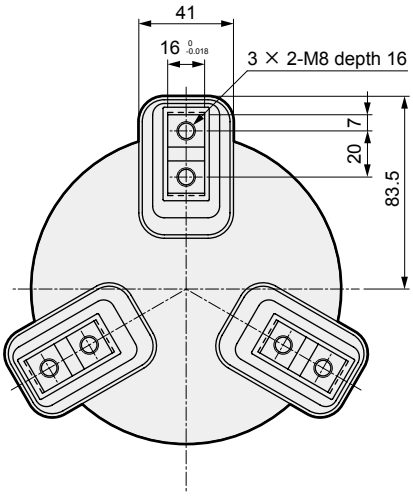

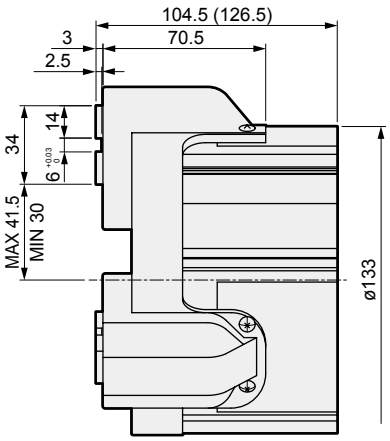

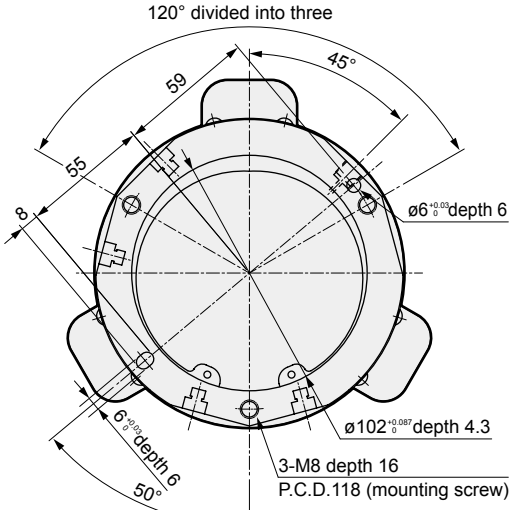

Position locking powerful chuck

CKL2-*-HC Series

● Operating stroke length: 8, 10, 12, 16, 20 mm

Single acting (normally closed)

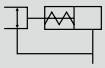

RoHS CAD

Specifications

Item	CKL2-32CS-HC	CKL2-40CS-HC	CKL2-50CS-HC	CKL2-63CS-HC	CKL2-80CS-HC
Bore size mm	ø32	ø40	ø50	ø63	ø80
Working fluid	Compressed air				
Max. working pressure MPa	0.7 (≈100 psi, 7 bar)				
Min. working pressure MPa	0.4 (≈58 psi, 4 bar)				
Ambient temperature °C	5 (41°F) to 60 (140°F)				
Port size	M5				Rc1/8
Operating stroke length mm	8	10	12	16	20
Rod diameter mm	ø10	ø12	ø14	ø16	ø16
Volumetric capacity (reciprocating) cm^3	7.7	15.6	28.3	60.3	118.2
Repeatability mm	±0.01				
Weight kg	0.42	0.60	0.82	1.66	3.20
Lubrication	Not required (use turbine oil class 1 ISO VG32 if necessary for lubrication)				

*1 : Use open port only, since spring clamp method is used.
Do not supply compressed air from the closed port. It may cause damage.
*2 : Do not plug closed port.
*3 : When using in a poor environment, contaminants inhaled from the closed port may cause air leakage. In that case, use a filter to prevent contaminants from entering.
*4 : Since gripping power differs depending on clamp position (open end, intermediate position or closed end) and clamp distance (jaw length), consider safety factors carefully for selection.

Switch specifications

Item	Proximity 2-wire	Proximity 3-wire
	T2H/V	T3H/V
Applications	Dedicated for programmable controller	For programmable controller, relay
Output method	—	NPN output
Power supply voltage	—	10 to 28 VDC
Load voltage/current	10 to 30 VDC, 5 to 20 mA (*1)	30 VDC or less, 100 mA or less
Indicator lamp	LED (Lit when ON)	
Leakage current	1 mA or less	10 μA or less
Weight	1 m:18 g 3 m:49 g 5 m:80 g	

*1 : The above max. load current is 20 mA at 25°C. The current is lower than 20 mA if the operating ambient temperature around the switch is higher than 25˚C. (5 to 10 mA at 60˚C)
*2 : Refer to Ending Page 1 for detailed switch specifications and dimensions.

How to order

Without switch (built-in magnet for switch)

CKL2 - 32CS - HC - Y1

With switch (built-in magnet for switch)

CKL2 - 32CS - HC - Y1 - T2H - R

Ⓐ Size

Ⓑ Option

Ⓒ Switch model No.

Ⓓ Switch quantity

Code	Description
Ⓐ Size	
32CS	
40CS	
50CS	
63CS	
80CS	
Ⓑ Option	
Y1	With attachment Material: S45C
Y2	With attachment Material: MC nylon

Ⓒ Switch model No.

Axial lead wire	Radial lead wire	Contact	Voltage AC	Voltage DC	Display	Lead wire
T2H*	T2V*	Proximity		●	1-color display	2-wire
T3H*	T3V*			●		3-wire

* Lead wire length	
Blank	1 m (standard)
3	3 m (option)
5	5 m (option)

Ⓓ Switch quantity	
R	1 on open side
H	1 on closed side
D	2

⚠ Precautions for model No. selection

*1 : Attachment is commonly used for inner and outer chuck.
*2 : Refer to pages 1868 and 1869 for the dimensions and compatible model of the attachment.
When ordered as an option, three are attached at shipment.

[Example of model No.]

CKL2-32CS-HC-Y1-T2H-R

Ⓐ Size : 32CS
Ⓑ Option : With attachment Material: S45C
Ⓒ Switch model No.: Proximity T2H switch, lead wire 1 m
Ⓓ Switch quantity : 1 on open side

How to order switch

SW - T2H

Switch model No.
(Item Ⓒ above)

Internal structure and parts list

● CKL2-32CS to 80CS-HC

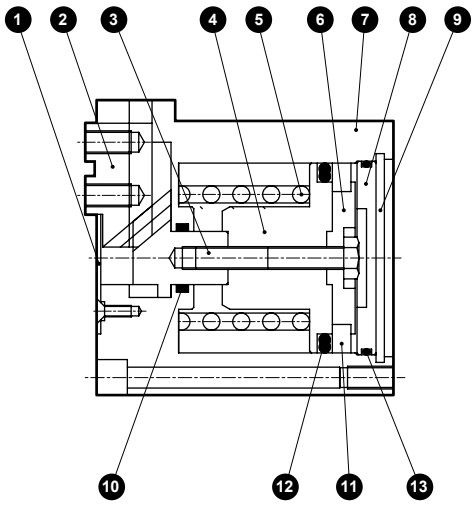

Cannot be disassembled

Parts list

No.	Part name	Material	Remarks	No.	Part name	Material	Remarks
1	Center guard	Stainless steel		7	Body	Aluminum alloy	
2	Finger	Carbon steel		8	Cylinder guard	Aluminum alloy	
3	Piston A	32CS: Stainless steel 40CS to 80CS: Carbon steel		9	Snap ring	Stainless steel	Steel (40, 80CS)
				10	Rod packing	Nitrile rubber	
4	Piston B	Aluminum alloy		11	Magnet		
5	Spring	Stainless steel		12	Piston packing	Nitrile rubber	
6	Piston C	Aluminum alloy		13	Cylinder gasket	Nitrile rubber	

Gripping power performance data

- Gripping power represents the thrust (per one finger) in the arrow direction shown in the figure.
- The gripping power in the closing direction with jaw length ℓ of hand is shown.
  ·Closed direction (➡) ———— (shown with continuous line)

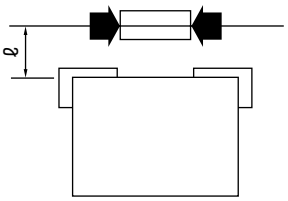

● CKL2-32CS-HC

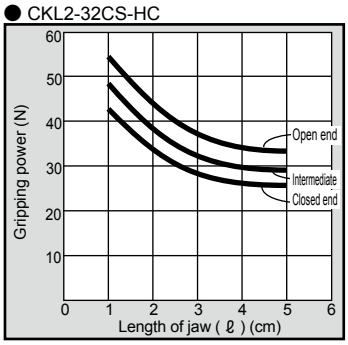

● CKL2-40CS-HC

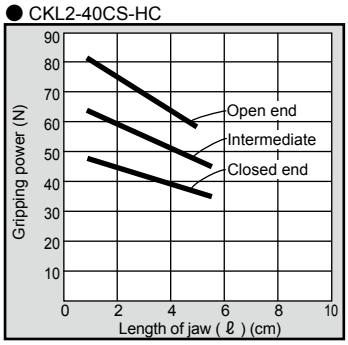

● CKL2-50CS-HC

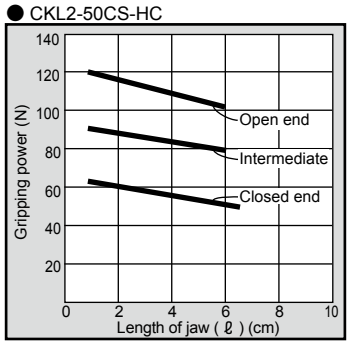

● CKL2-63CS-HC

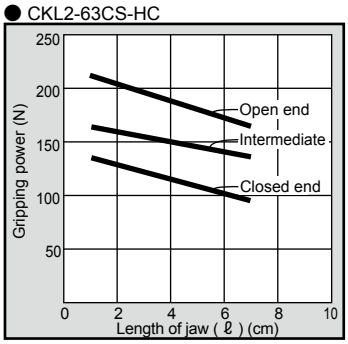

● CKL2-80CS-HC

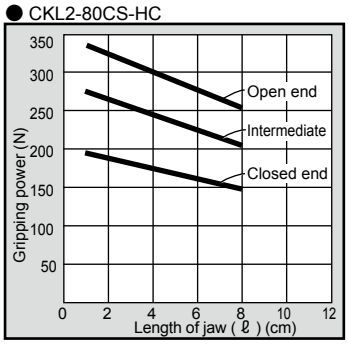

(Note) When making a selection, read the precautions for design and selection on page 1872.

Dimensions

● CKL2-32CS-HC standard

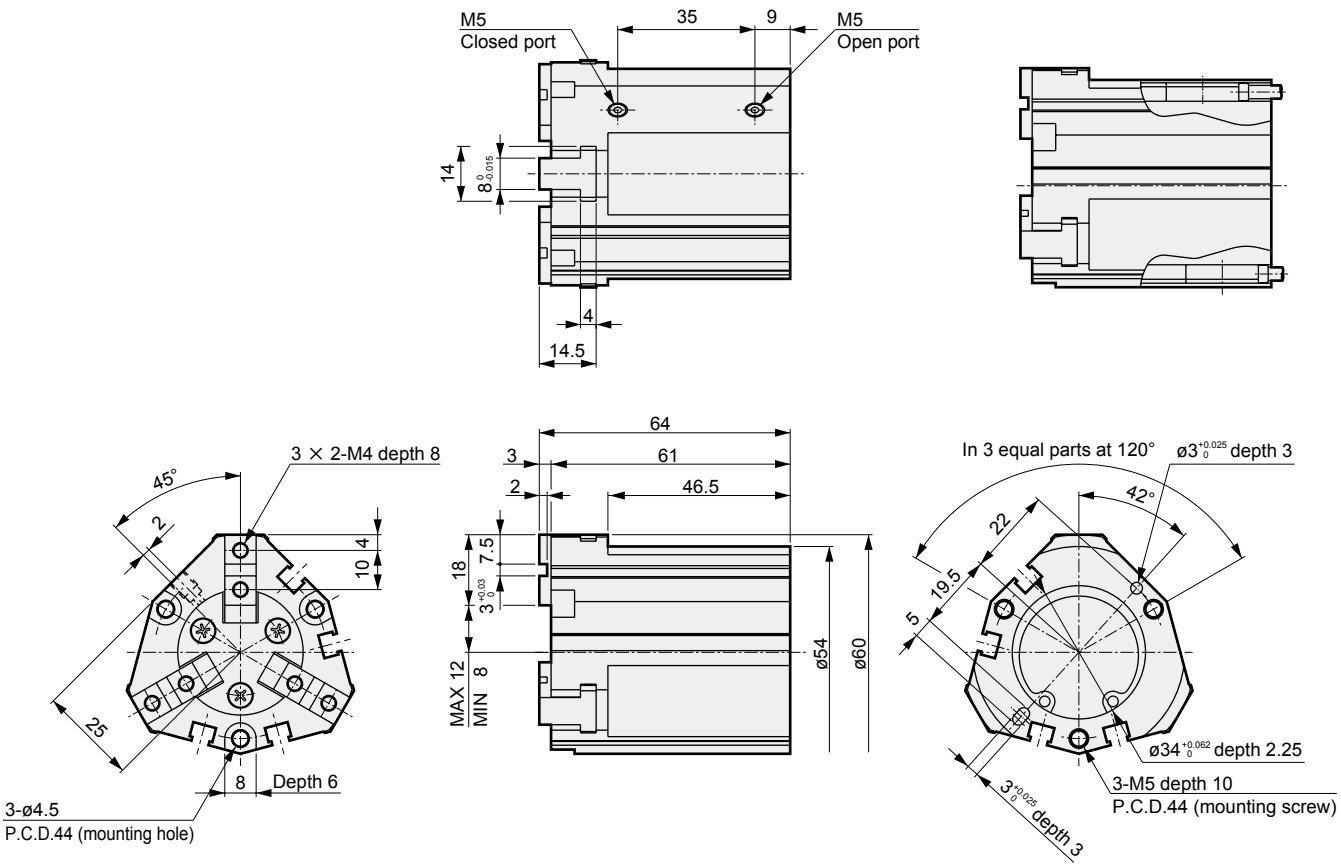

● With switch

● CKL2-40CS-HC standard

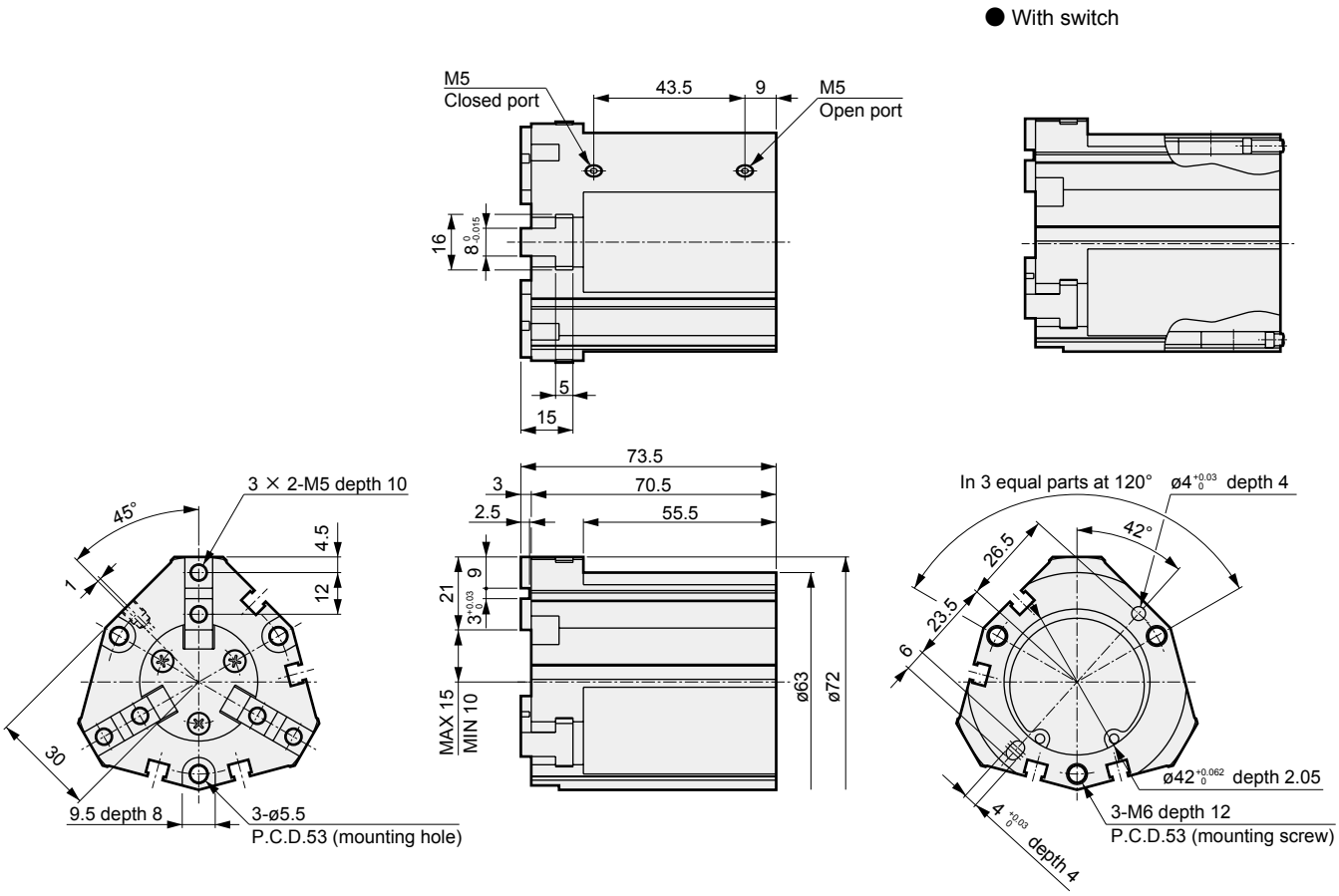

● With switch

LCM
LCR
LCG
LCW
LCX
STM
STG
STS/STL
STR2
UCA2
ULK*
JSK/M2
JSG
JSC3/JSC4
USSD
UFCD
USC
UB
JSB3
LMB
LML
HCM
HCA
LBC
CAC4
UCAC2
CAC-N
UCAC-N
RCS2
RCC2
PCC
SHC
MCP
GLC
MFC
BBS
RRC
GRC
RV3*
NHS
HRL
LN
Hand
Chuk
MecHnd/Chuk
ShkAbs
FJ
FK
SpdContr
Ending
CKL2
CKLG2
CKL2-HC
CKH2
CKLB2
CKG
CK
CKA
CKS
CKS-F
CKF
CKJ
CHC

Dimensions

● CKL2-50CS-HC standard

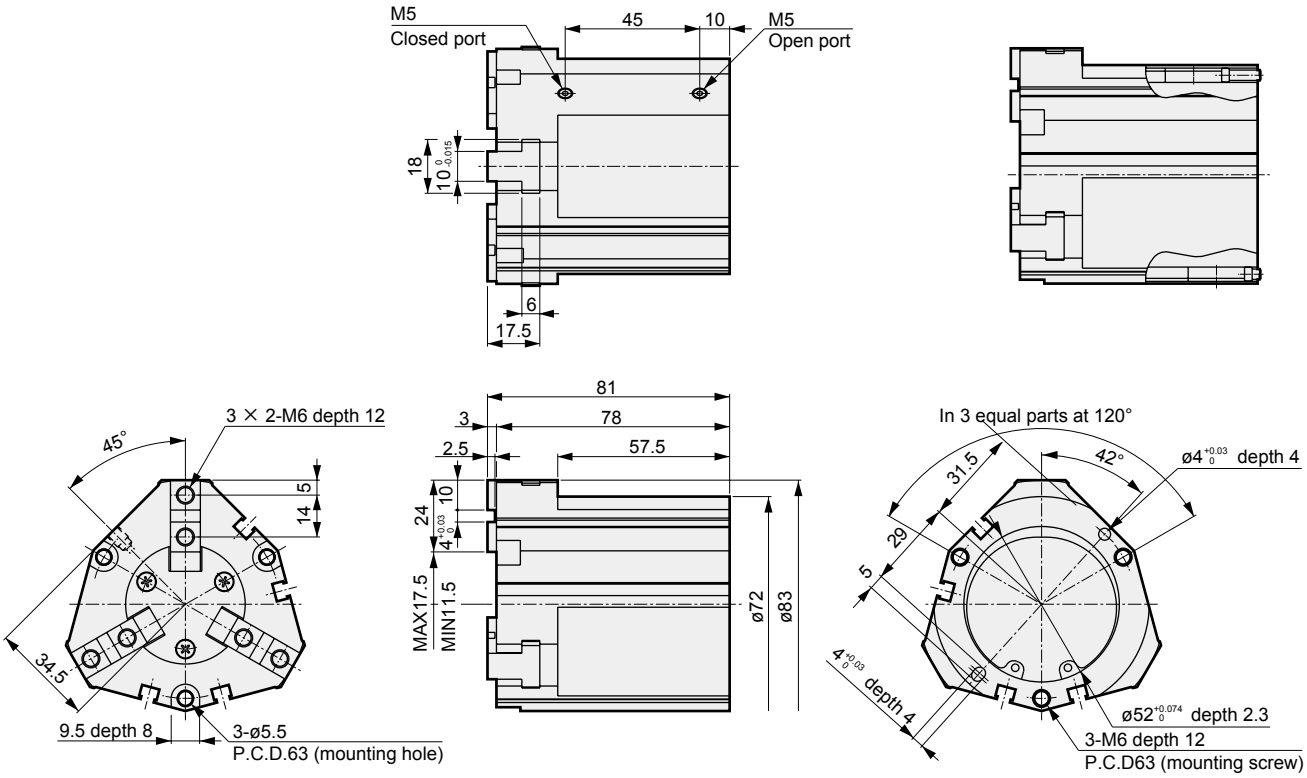

● With switch

● CKL2-63CS-HC standard

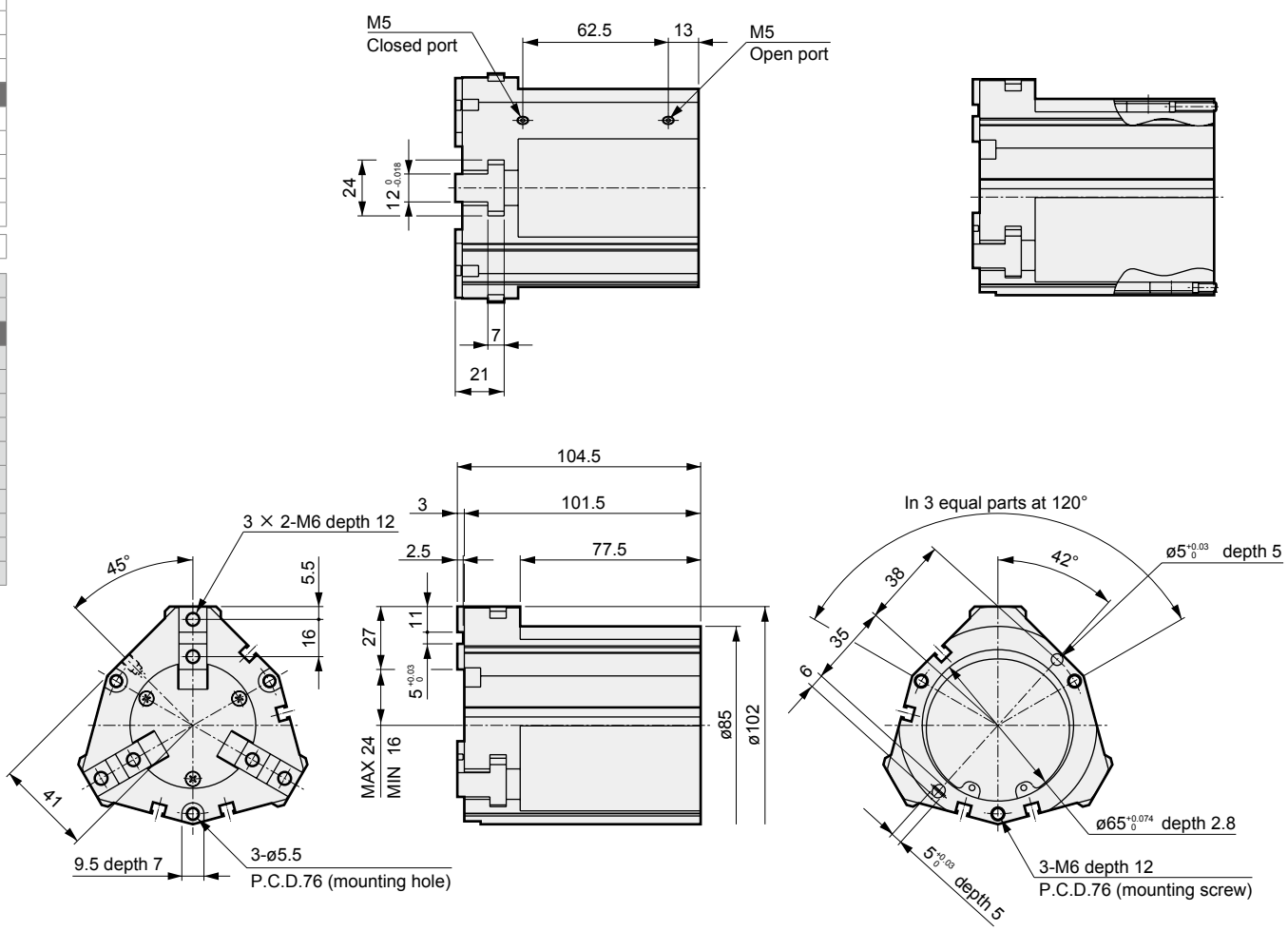

● With switch

Dimensions

● CKL2-80CS-HC standard

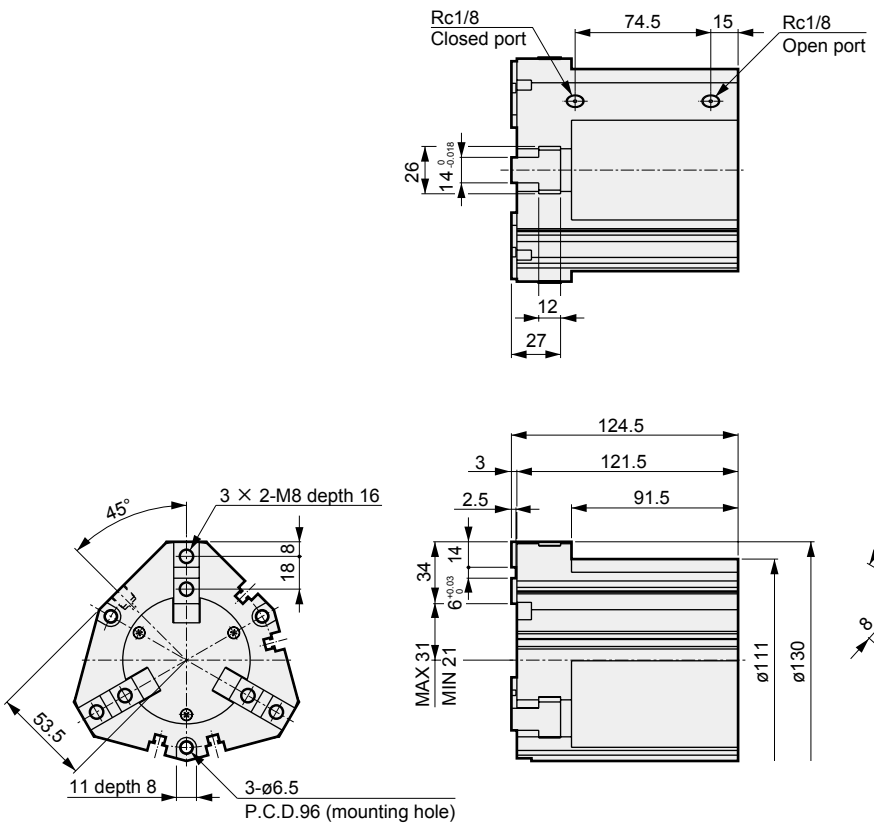

● With switch

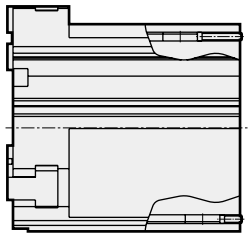

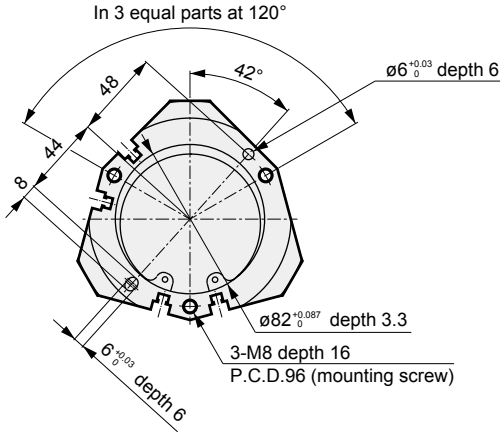

Powerful chuck with high gripping power

CKH2 Series

● Operating stroke length: 6, 8, 10, 12 mm

Double acting

Single acting (normally open)

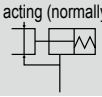

Single acting (normally closed)

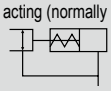

RoHS CAD

Specifications

Item	CKH2-50CS	CKH2-63CS	CKH2-80CS	CKH2-100CS
Bore size mm	ø50	ø63	ø80	ø100
Working fluid	Compressed air			
Max. working pressure MPa	0.7 (≈100 psi, 7 bar)			
Min. working pressure MPa	0.3 (≈44 psi, 3 bar)			
Ambient temperature °C	5 (41°F) to 60 (140°F)			
Port size	M5		Rc1/8	
Operating stroke length mm	6	8	10	12
Rod diameter mm	ø14	ø16	ø16	ø20
Volumetric capacity (reciprocating) cm^3	28.3	60.3	118.2	215.5
Repeatability mm	±0.01			
Weight kg	0.59	1.02	2.02	3.45
Lubrication	Not required (use turbine oil class 1 ISO VG32 if necessary for lubrication)			

Switch specifications

Item	Proximity 2-wire	Proximity 3-wire
	T2H/V	T3H/V
Applications	Dedicated for programmable controller	For programmable controller, relay
Output method	—	NPN output
Power supply voltage	—	10 to 28 VDC
Load voltage/current	10 to 30 VDC, 5 to 20 mA (*1)	30 VDC or less, 100 mA or less
Indicator lamp	LED (Lit when ON)	
Leakage current	1 mA or less	10 μA or less
Weight	1 m:18 g 3 m:49 g 5 m:80 g	

*1 : The above max. load current is 20 mA at 25°C. The current is lower than 20 mA if the operating ambient temperature around the switch is higher than 25°C. (5 to 10 mA at 60°C)

*2 : Refer to Ending Page 1 for detailed switch specifications and dimensions.

How to order

Without switch (built-in magnet for switch)

CKH2 - 50CS - O

With switch (built-in magnet for switch)

CKH2 - 50CS - O - T2H - R

Ⓐ Size

Ⓑ Option

Ⓒ Switch model No.

Ⓓ Switch quantity

Code	Description
Ⓐ Size	
50CS	
63CS	
80CS	
100CS	
Ⓑ Option	
Blank	Standard (double acting)
O	Single acting (normally open)
C	Single acting (normally closed)
Y1	With attachment Material: S45C
Y2	With attachment Material: MC nylon

Ⓒ Switch model No.

Axial lead wire	Radial lead wire	Contact	Voltage AC	Voltage DC	Display	Lead wire
T2H*	**T2V***	Proximity		●	1-color display	2-wire
T3H*	**T3V***			●		3-wire

*** Lead wire length**	
Blank	1 m (standard)
3	3 m (option)
5	5 m (option)

Ⓓ Switch quantity	
R	1 on open side
H	1 on closed side
D	2

⚠ Precautions for model No. selection

*1 : Attachment is not available for inner diameter chuck.
*2 : Refer to pages 1868 and 1869 for the dimensions and compatible model of the attachment.
When ordered as an option, three are attached at shipment.

[Example of model No.]

CKH2-50CS-O-T2H-R

Ⓐ Size : 50CS
Ⓑ Option : Single acting (normally open)
Ⓒ Switch model No. : Proximity T2H switch, lead wire 1 m
Ⓓ Switch quantity : 1 on open side

How to order switch

SW - T2H

Switch model No.
(Item Ⓒ above)

Note) When the type with two switches is selected, if the model has a short operational stroke length, both switches may turn on depending ON the workpiece size.

LCM
LCR
LCG
LCW
LCX
STM
STG
STS/STL
STR2
UCA2
ULK*
JSK/M2
JSG
JSC3/JSC4
USSD
UFCD
USC
UB
JSB3
LMB
LML
HCM
HCA
LBC
CAC4
UCAC2
CAC-N
UCAC-N
RCS2
RCC2
PCC
SHC
MCP
GLC
MFC
BBS
RRC
GRC
RV3*
NHS
HRL
LN
Hand
Chuk
MecHnd/Chuk
ShkAbs
FJ
FK
SpdContr
Ending
CKL2
CKLG2
CKL2-HC
CKH2
CKLB2
CKG
CK
CKA
CKS
CKS-F
CKF
CKJ
CHC

Internal structure and parts list

● CKH2-50CS to 100CS

Standard (double acting)

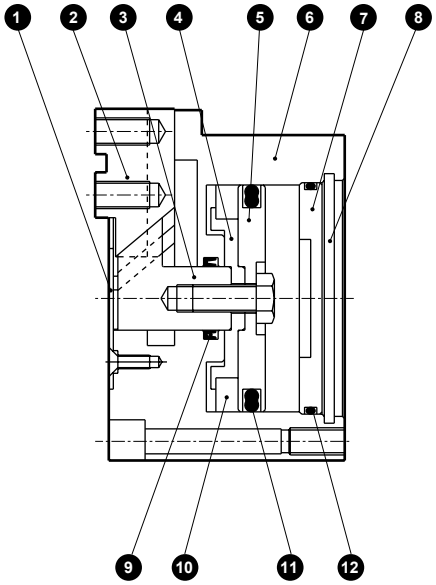

O (normally open)

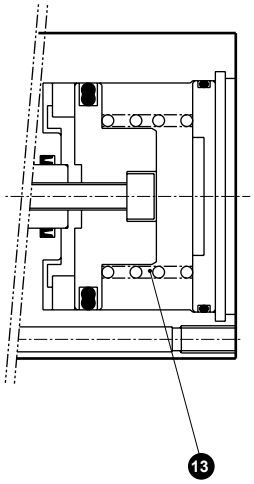

C (normally closed)

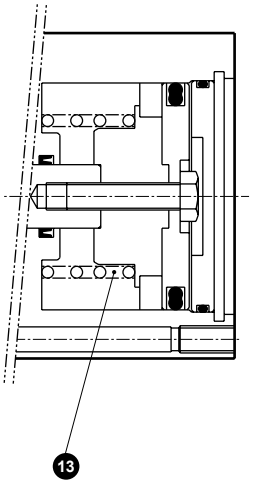

Cannot be disassembled

Parts list

No.	Part name	Material	Remarks	No.	Part name	Material	Remarks
1	Center guard	Stainless steel		8	C type snap ring	Stainless steel (50/60CS) Steel (80CS/100CS)	
2	Finger	Carbon steel					
3	Piston A	Carbon steel		9	Lot sealant	Nitrile rubber	
4	Piston B	Aluminum alloy		10	Magnet		
5	Piston C	Aluminum alloy		11	Piston seal	Nitrile rubber	
6	Body	Aluminum alloy		12	Cylinder sealant	Nitrile rubber	
7	Cylinder guard	Aluminum alloy		13	O spring	Stainless steel	

Gripping power performance data

- Gripping power represents the thrust (per one finger) in the arrow direction shown in the figure.
- The gripping power in the opening/closing directions with jaw length ℓ of hand with a supply pressure of 0.3, 0.5 and 0.7 MPa is shown.
  - ·Open direction (⇦) - - - - - - (shown with broken line)
  - ·Closed direction (➡) ———— (shown with continuous line)

(Note) O type gripping power decreases approximately 20 to 30% in the closed direction compared to double acting.
C type gripping power decreases approximately 10 to 30% in the open direction compared to the double acting.
When making a selection, read the precautions for design and selection on page 1872.

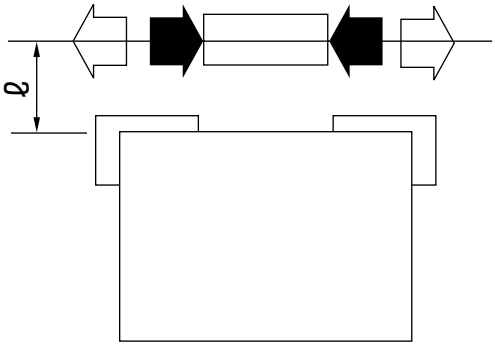

● CKH2-50CS

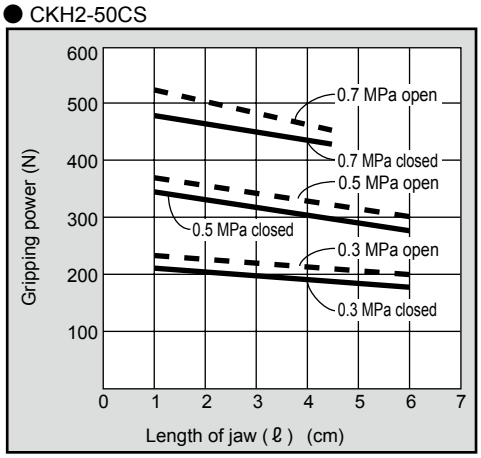

● CKH2-63CS

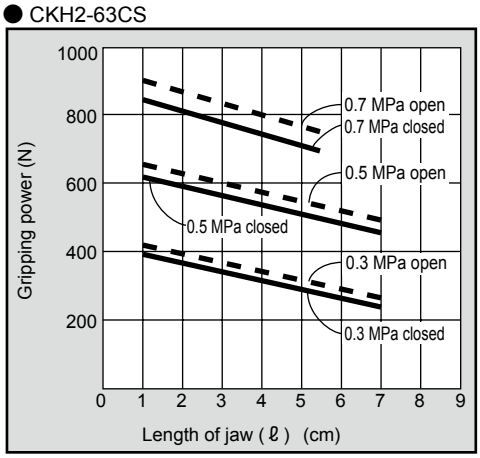

● CKH2-80CS

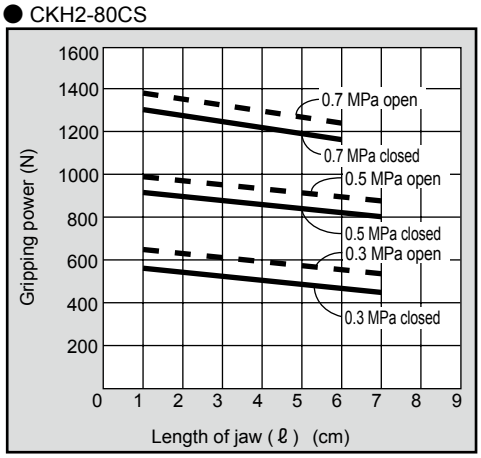

● CKH2-100CS

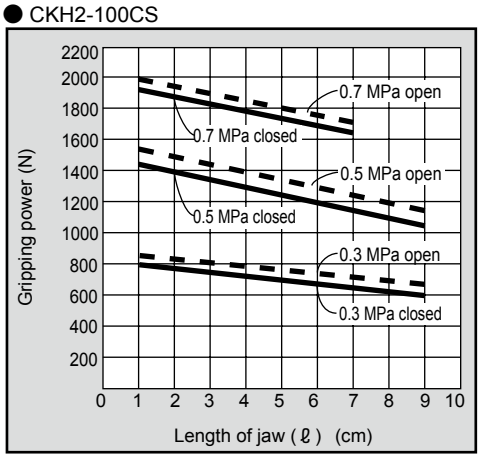

LCM
LCR
LCG
LCW
LCX
STM
STG
STS/STL
STR2
UCA2
ULK*
JSK/M2
JSG
JSC3/JSC4
USSD
UFCD
USC
UB
JSB3
LMB
LML
HCM
HCA
LBC
CAC4
UCAC2
CAC-N
UCAC-N
RCS2
RCC2
PCC
SHC
MCP
GLC
MFC
BBS
RRC
GRC
RV3*
NHS
HRL
LN
Hand
Chuk
MecHnd/Chuk
ShkAbs
FJ
FK
SpdContr
Ending
CKL2
CKLG2
CKL2-HC
CKH2
CKLB2
CKG
CK
CKA
CKS
CKS-F
CKF
CKJ
CHC

Dimensions

● CKH2-50CS standard/O/C

· Dimensions in ( ) are for O [normally open] and C [normally closed] specifications.

● With switch

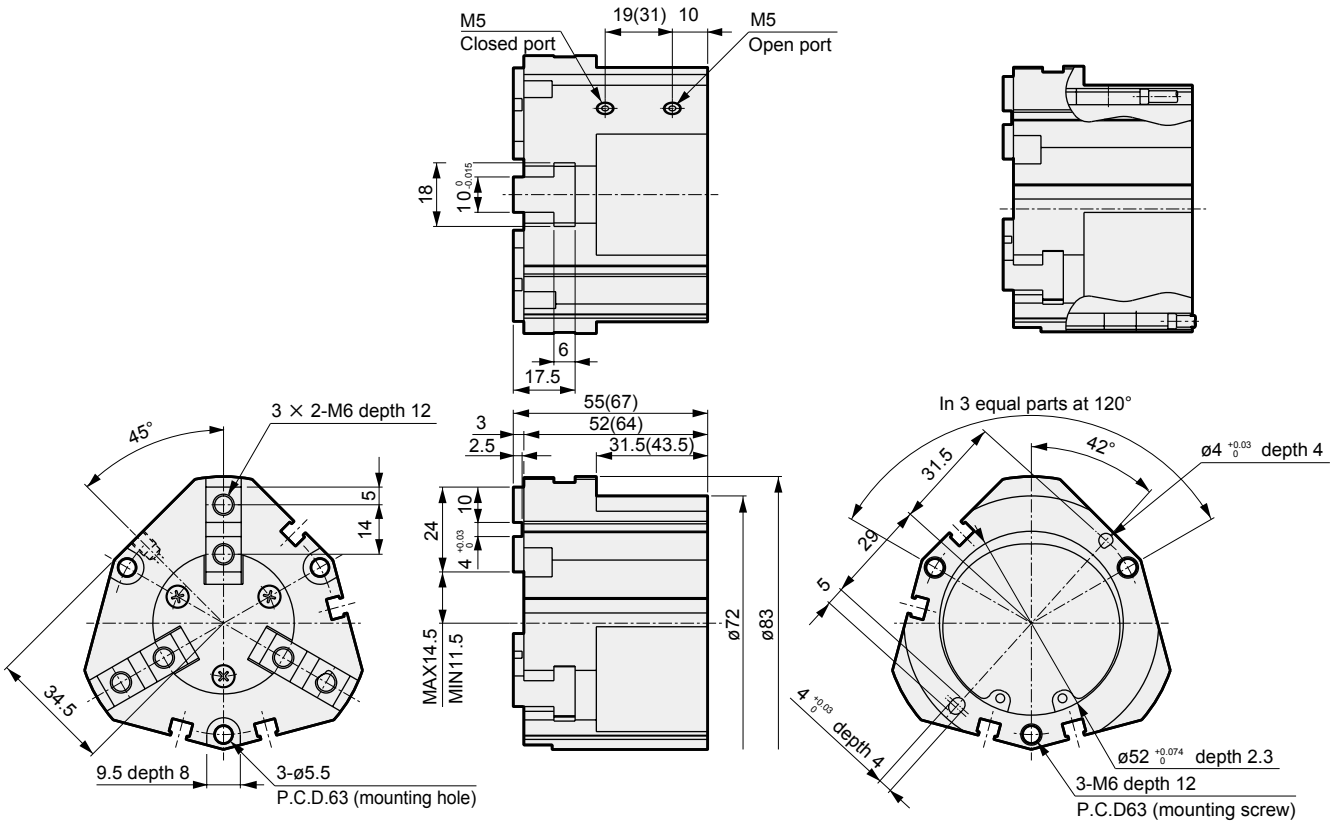

● CKH2-63CS standard/O/C

· Dimensions in ( ) are for O [normally closed] and C [normally closed] specifications.

● With switch

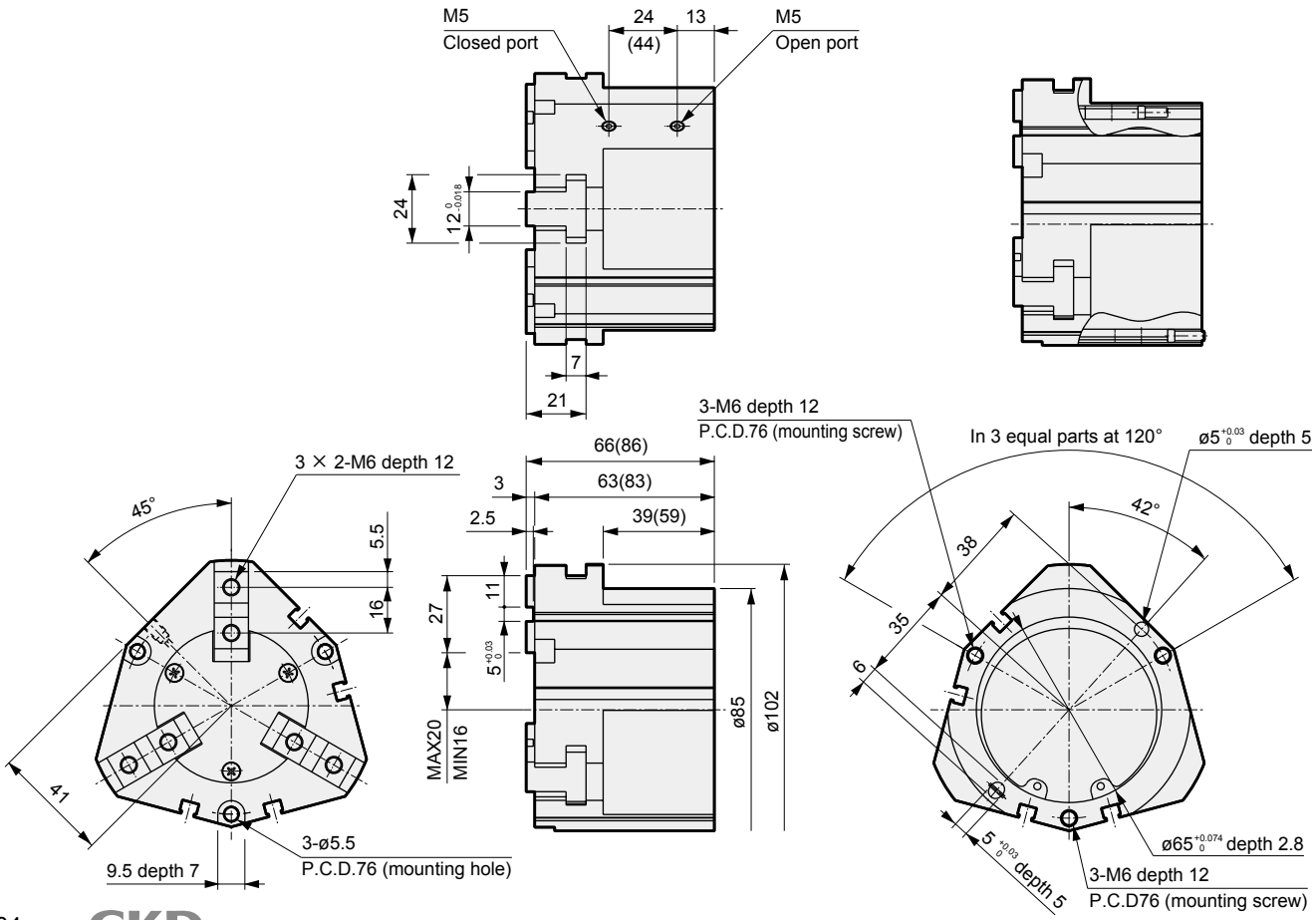

Dimensions

● CKH2-80CS standard/O/C
· Dimensions in ( ) are for O [normally open] and C [normally closed] specifications.

● With switch

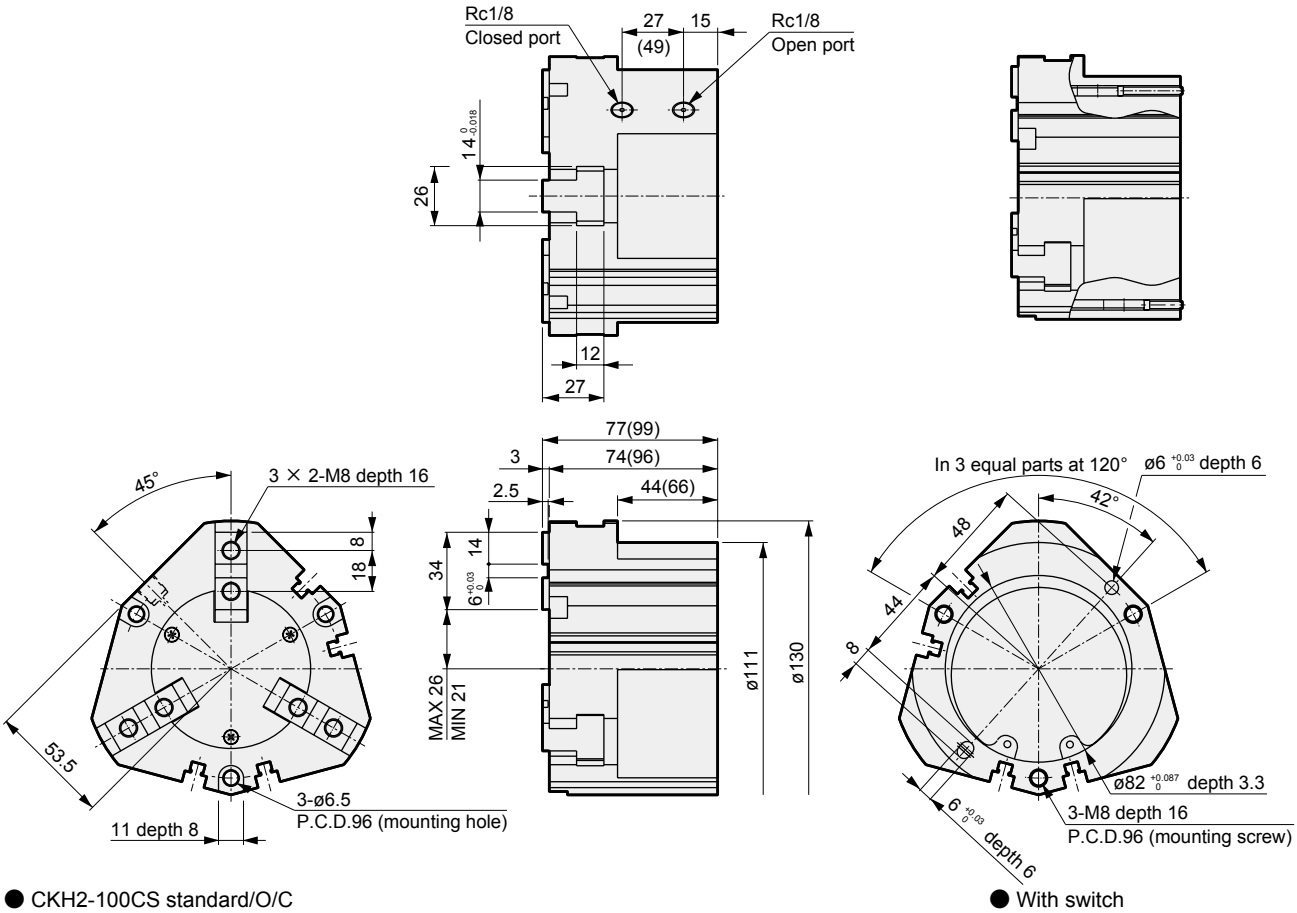

● CKH2-100CS standard/O/C
· Dimensions in ( ) are for O [normally open] and C [normally closed] specifications.

● With switch

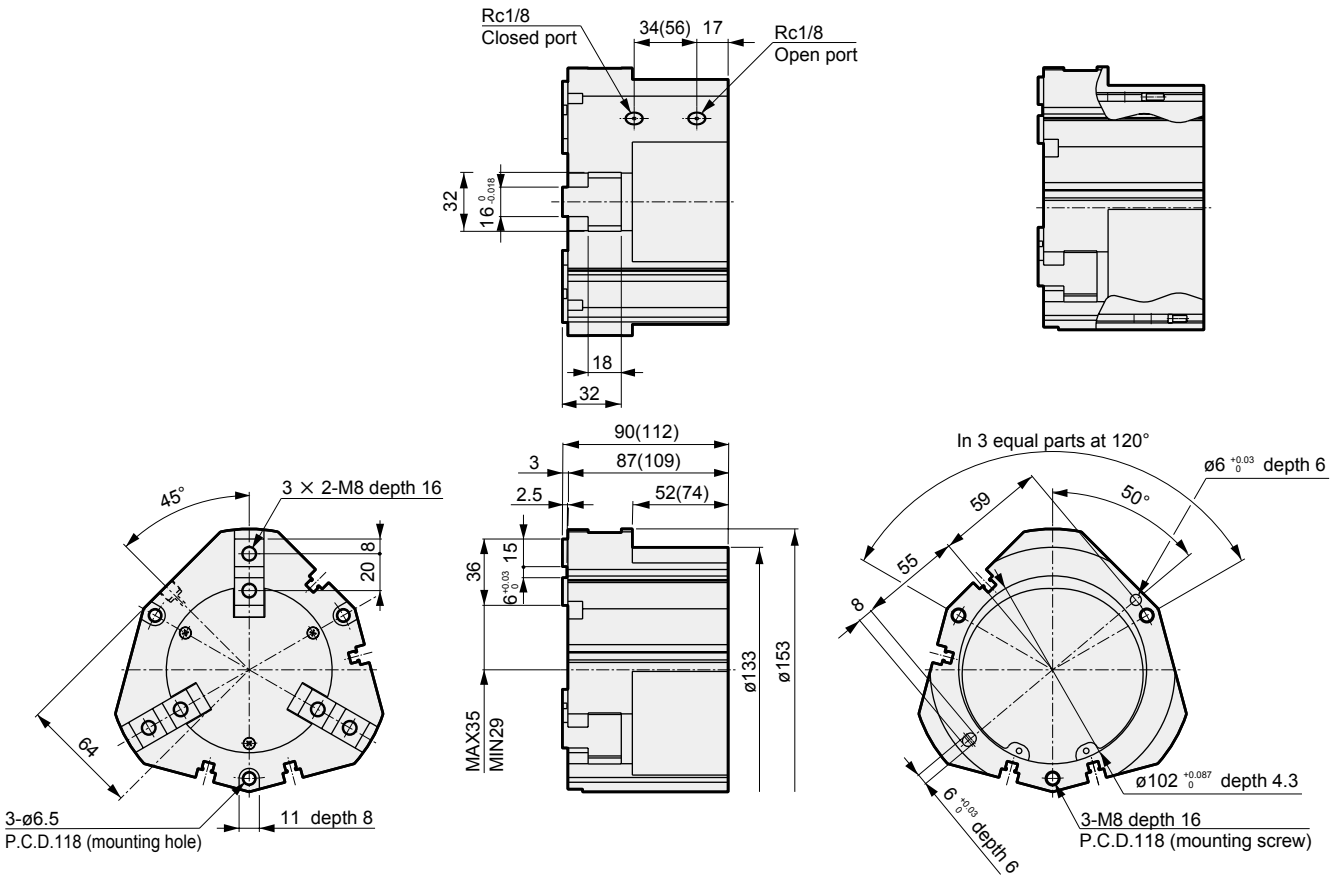

2-way powerful chuck

CKLB2 Series

● Operational stroke length: 5, 6, 8, 10, 12, 16, 20, 23mm

Double acting

Single acting (normally open)

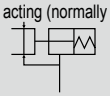

Single acting (normally closed)

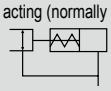

RoHS CAD

Specifications

Item	CKLB2-20CS	CKLB2-25CS	CKLB2-32CS	CKLB2-40CS	CKLB2-50CS	CKLB2-63CS	CKLB2-80CS	CKLB2-100CS
Bore size mm	ø20	ø25	ø32	ø40	ø50	ø63	ø80	ø100
Working fluid	Compressed air							
Max. working pressure MPa	0.7 (≈100 psi, 7 bar)							
Min. working pressure MPa	0.3 (≈44 psi, 3 bar)							
Ambient temperature °C	5 (41°F) to 60 (140°F)							
Port size	M5						Rc1/8	
Operating stroke length mm	5	6	8	10	12	16	20	23
Rod diameter mm	ø6	ø8	ø10	ø12	ø14	ø16	ø16	ø20
Volumetric capacity (reciprocating) cm^3	1.8	3.3	7.7	15.6	28.3	60.3	118.2	215.5
Repeatability mm	±0.01							
Weight kg	0.13	0.20	0.32	0.38	0.58	1.00	2.00	3.53
Lubrication	Not required (use turbine oil class 1 ISO VG32 if necessary for lubrication)							

Switch specifications

Item	Proximity 2-wire	Proximity 3-wire
	T2H/V	T3H/V
Applications	Dedicated for programmable controller	For programmable controller, relay
Output method	—	NPN output
Power supply voltage	—	10 to 28 VDC
Load voltage/current	10 to 30 VDC, 5 to 20 mA (*1)	30 VDC or less, 100 mA or less
Indicator lamp	LED (Lit when ON)	
Leakage current	1 mA or less	10 μA or less
Weight	1 m:18 g 3 m:49 g 5 m:80 g	

*1 : The above max. load current is 20 mA at 25°C. The current is lower than 20 mA if the operating ambient temperature around the switch is higher than 25˚C. (5 to 10 mA at 60˚C)

*2 : Refer to Ending Page 1 for detailed switch specifications and dimensions.

How to order

Without switch (built-in magnet for switch)

CKLB2 - 20CS - O

With switch (built-in magnet for switch)

CKLB2 - 20CS - O - T2H - R

Ⓐ Size

Ⓑ Option

Ⓒ Switch model No.

Ⓓ Switch quantity

Code	Description
Ⓐ Size	
20CS	
25CS	
32CS	
40CS	
50CS	
63CS	
80CS	
100CS	
Ⓑ Option	
Blank	Standard (double acting)
O	Single acting (normally open)
C	Single acting (normally closed)
Y1	With attachment Material: S45C
Y2	With attachment Material: MC nylon

Ⓒ Switch model No.

Axial lead wire	Radial lead wire	Contact	Voltage AC	Voltage DC	Display	Lead wire
T2H*	T2V*	Proximity		●	1-color display	2-wire
T3H*	T3V*			●		3-wire

* Lead wire length	
Blank	1 m (standard)
3	3 m (option)
5	5 m (option)

Ⓓ Switch quantity	
R	1 on open side
H	1 on closed side
D	2

⚠ Precautions for model No. selection

*1 : Attachment is commonly used for inner and outer mount chuck.
*2 : Refer to pages 1868 and 1869 for the dimensions and compatible model of the attachment.
When ordered as an option, two are attached at shipment.

[Example of model No.]

CKLB2-20CS-0-T2H-R

Ⓐ Size : 20CS
Ⓑ Option : Single acting (normally open)
Ⓒ Switch model No.: Proximity T2H switch, lead wire 1 m
Ⓓ Switch quantity : 1 on open side

How to order switch

SW - T2H

Switch model No.
(Item Ⓒ above)

Note) When the type with two switches is selected, if the model has a short operational stroke length, both switches may turn ON depending on the workpiece size.

Specifications for rechargeable battery

(Catalog No. CC-1226A)

CKLB2 - ··· - P4*

● Design compatible with rechargeable battery manufacturing process.

* Contact CKD for details.

LCM
LCR
LCG
LCW
LCX
STM
STG
STS/STL
STR2
UCA2
ULK*
JSK/M2
JSG
JSC3/JSC4
USSD
UFCD
USC
UB
JSB3
LMB
LML
HCM
HCA
LBC
CAC4
UCAC2
CAC-N
UCAC-N
RCS2
RCC2
PCC
SHC
MCP
GLC
MFC
BBS
RRC
GRC
RV3*
NHS
HRL
LN
Hand
Chuk
MecHnd/Chuk
ShkAbs
FJ
FK
SpdContr
Ending
CKL2
CKLG2
CKL2-HC
CKH2
CKLB2
CKG
CK
CKA
CKS
CKS-F
CKF
CKJ
CHC

Internal structure and parts list

● CKLB2-20CS to 100CS

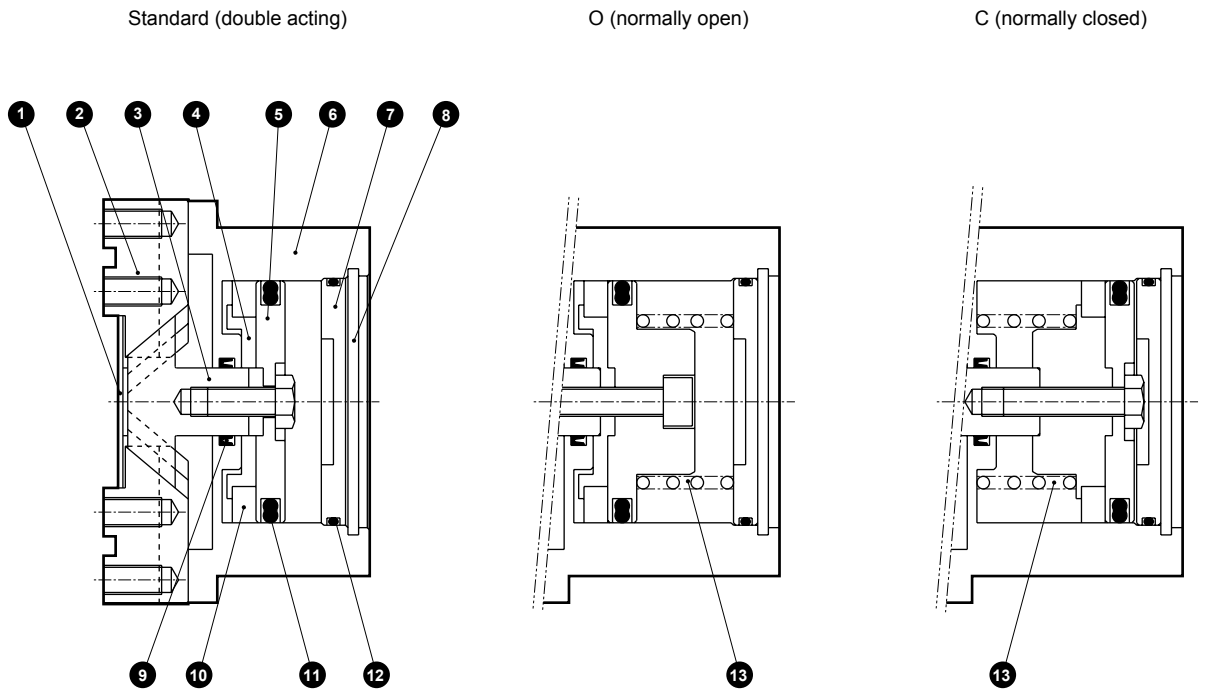

Cannot be disassembled

Parts list

No.	Part name	Material	Remarks	No.	Part name	Material	Remarks
1	Center guard	Stainless steel		7	Cylinder guard	Aluminum alloy	
2	Finger	Carbon steel		8	Snap ring	Stainless steel	Steel (80, 100CS)
3	Piston A	20CS to 32CS: Stainless steel 40CS to 100CS: Carbon steel		9	Rod packing	Nitrile rubber	
				10	Magnet		
4	Piston B	Aluminum alloy		11	Piston packing	Nitrile rubber	
5	Piston C	Aluminum alloy		12	Cylinder gasket	Nitrile rubber	
6	Body	Aluminum alloy		13	O spring	Stainless steel	

Gripping power performance data

- Gripping power represents the thrust (per one finger) in the arrow direction shown in the figure.
- The gripping power in the opening/closing directions with jaw length ℓ of hand with a supply pressure of 0.3, 0.5 and 0.7 MPa is shown.
  - ·Open direction (⇦) - - - - - - (shown with broken line)
  - ·Closed direction (➡) ———— (shown with continuous line)

(Note) O type gripping power decreases approximately 20 to 30% in the closed direction compared to double acting.
C type gripping power decreases approximately 10 to 20% in the open direction compared to the double acting.
When making a selection, read the precautions for design and selection on page 1872.

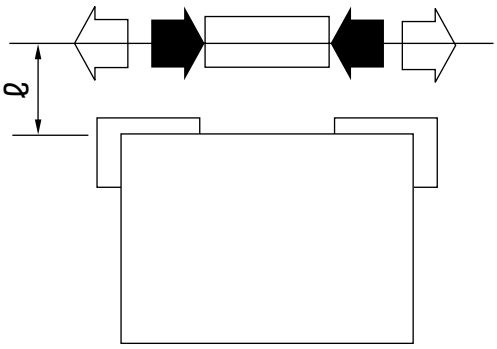

● CKLB2-20CS

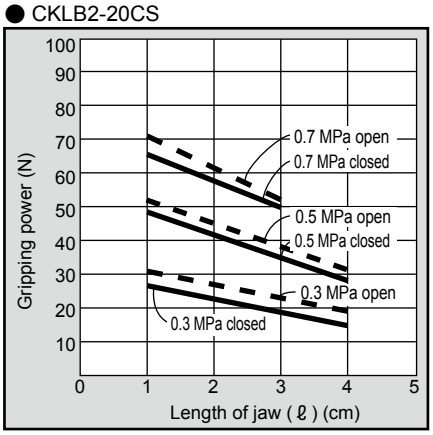

● CKLB2-25CS

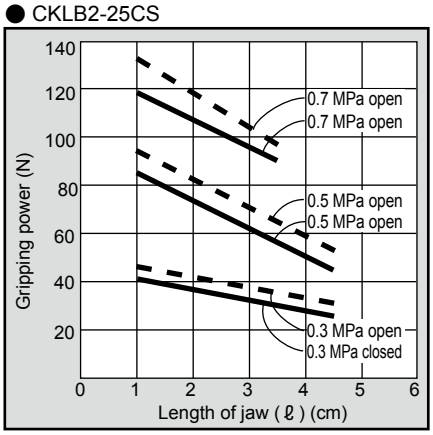

● CKLB2-32CS

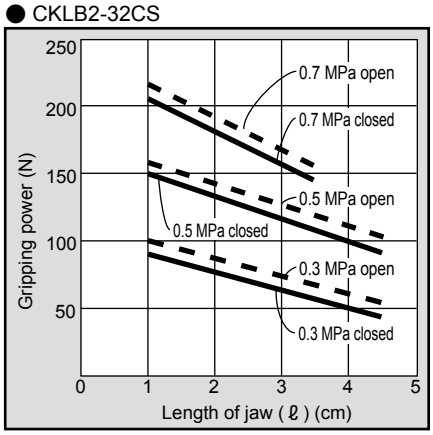

● CKLB2-40CS

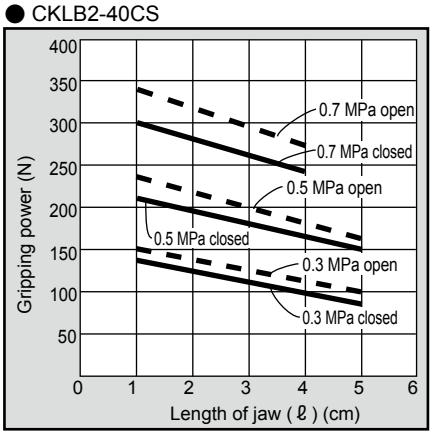

● CKLB2-50CS

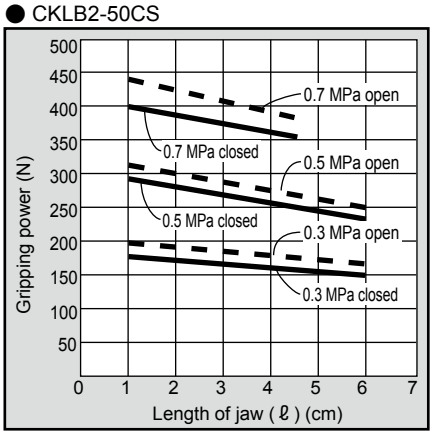

● CKLB2-63CS

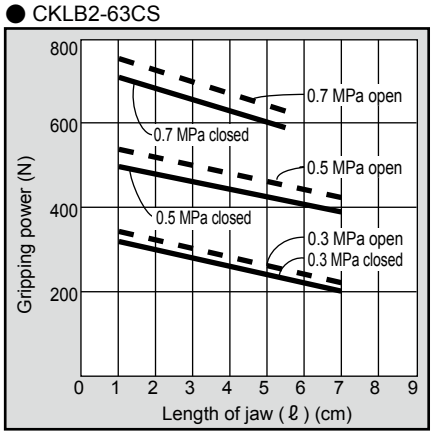

● CKLB2-80CS

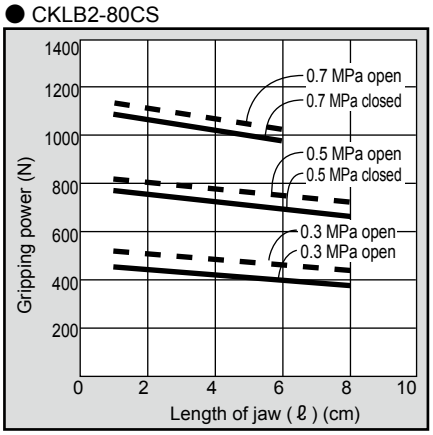

● CKLB2-100CS

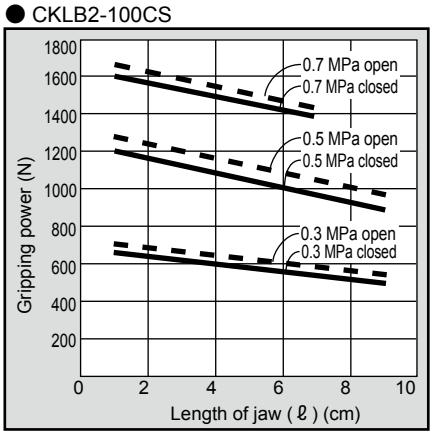

LCM
LCR
LCG
LCW
LCX
STM
STG
STS/STL
STR2
UCA2
ULK*
JSK/M2
JSG
JSC3/JSC4
USSD
UFCD
USC
UB
JSB3
LMB
LML
HCM
HCA
LBC
CAC4
UCAC2
CAC-N
UCAC-N
RCS2
RCC2
PCC
SHC
MCP
GLC
MFC
BBS
RRC
GRC
RV3*
NHS
HRL
LN
Hand
Chuk
MecHnd/Chuk
ShkAbs
FJ
FK
SpdContr
Ending
CKL2
CKLG2
CKL2-HC
CKH2
CKLB2
CKG
CK
CKA
CKS
CKS-F
CKF
CKJ
CHC

Dimensions

● CKLB2-20CS standard/O/C

· Dimensions in ( ) are for O [normally open] and C [normally closed] specifications.

● With switch

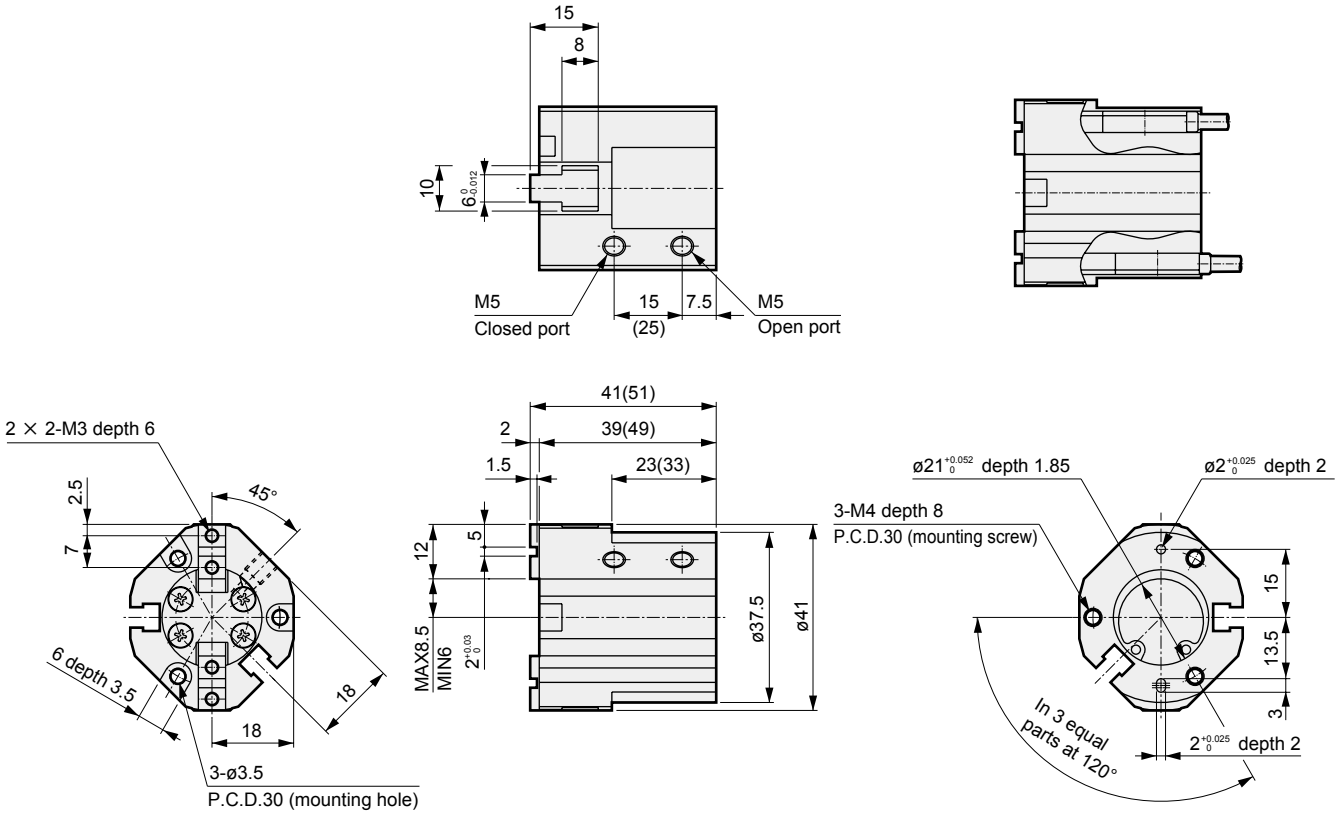

● CKLB2-25CS standard/O/C

· Dimensions in ( ) are for O [normally open] and C [normally closed] specifications.

● With switch

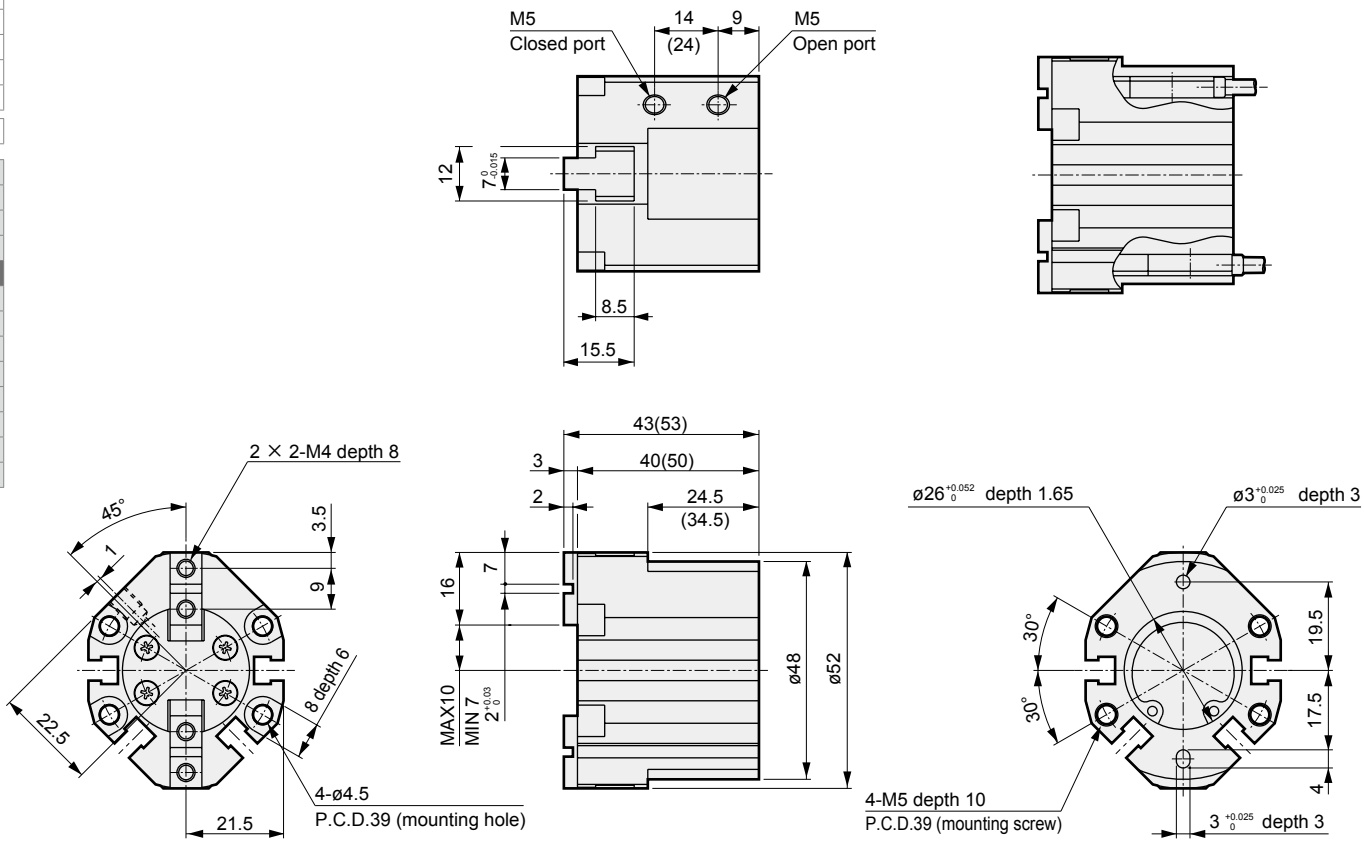

Dimensions

● CKLB2-32CS standard/O/C
· Dimensions in ( ) are for O [normally open] and C [normally closed] specifications.

● With switch

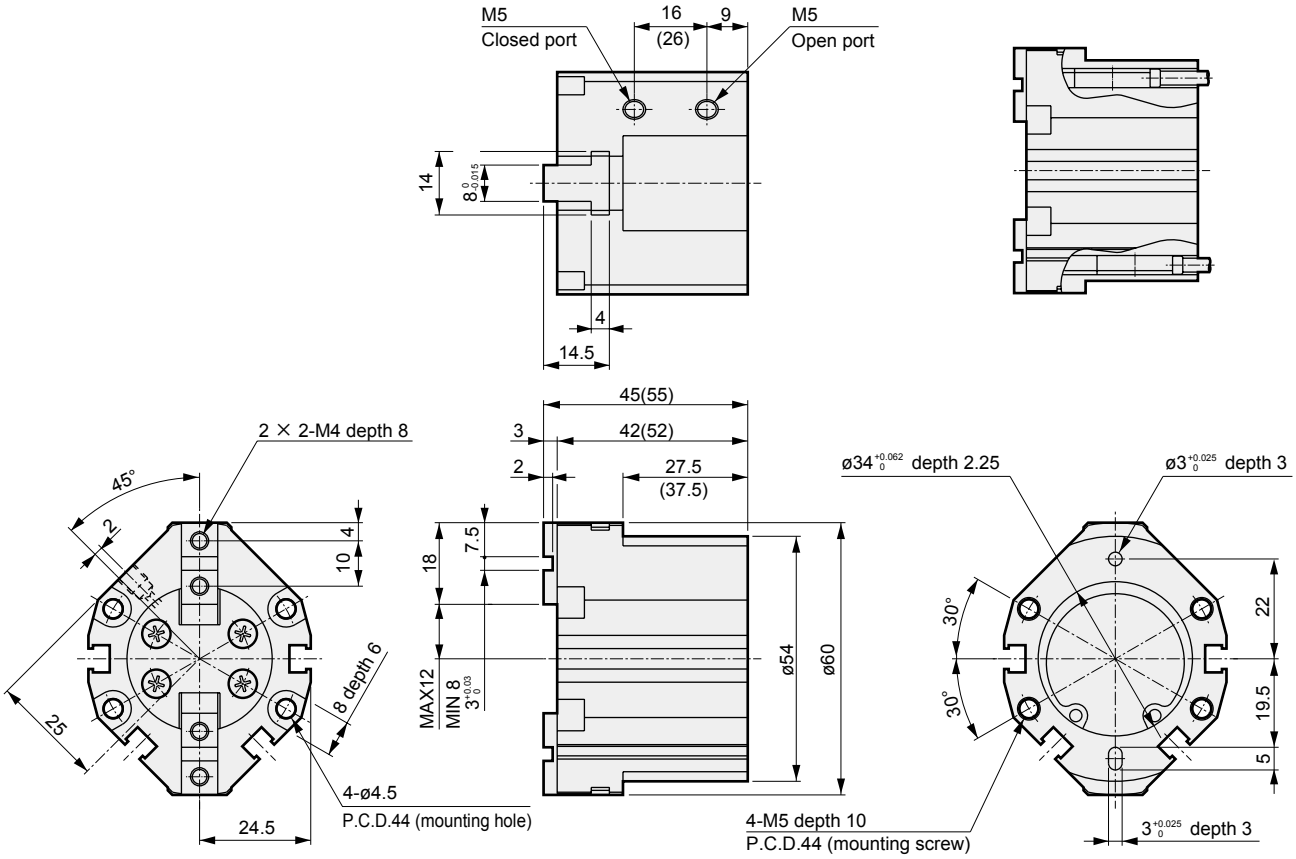

● CKLB2-40CS standard/O/C
· Dimensions in ( ) are for O [normally open] and C [normally closed] specifications.

● With switch

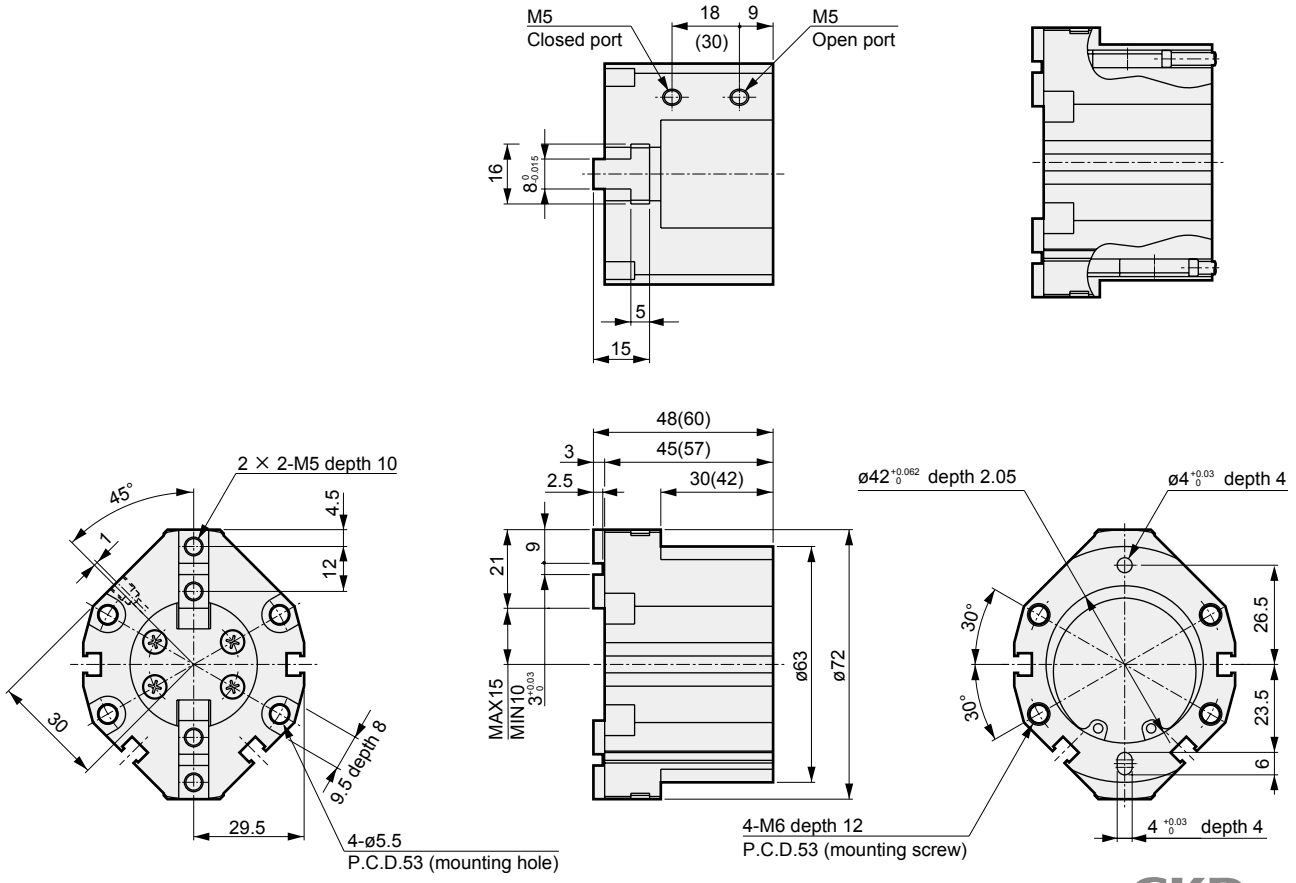

LCM
LCR
LCG
LCW
LCX
STM
STG
STS/STL
STR2
UCA2
ULK*
JSK/M2
JSG
JSC3/JSC4
USSD
UFCD
USC
UB
JSB3
LMB
LML
HCM
HCA
LBC
CAC4
UCAC2
CAC-N
UCAC-N
RCS2
RCC2
PCC
SHC
MCP
GLC
MFC
BBS
RRC
GRC
RV3*
NHS
HRL
LN
Hand
Chuk
MecHnd/Chuk
ShkAbs
FJ
FK
SpdContr
Ending
CKL2
CKLG2
CKL2-HC
CKH2
CKLB2
CKG
CK
CKA
CKS
CKS-F
CKF
CKJ
CHC

Dimensions

● CKLB2-50CS standard/O/C

· Dimensions in ( ) are for O [normally open] and C [normally closed] specifications.

● With switch

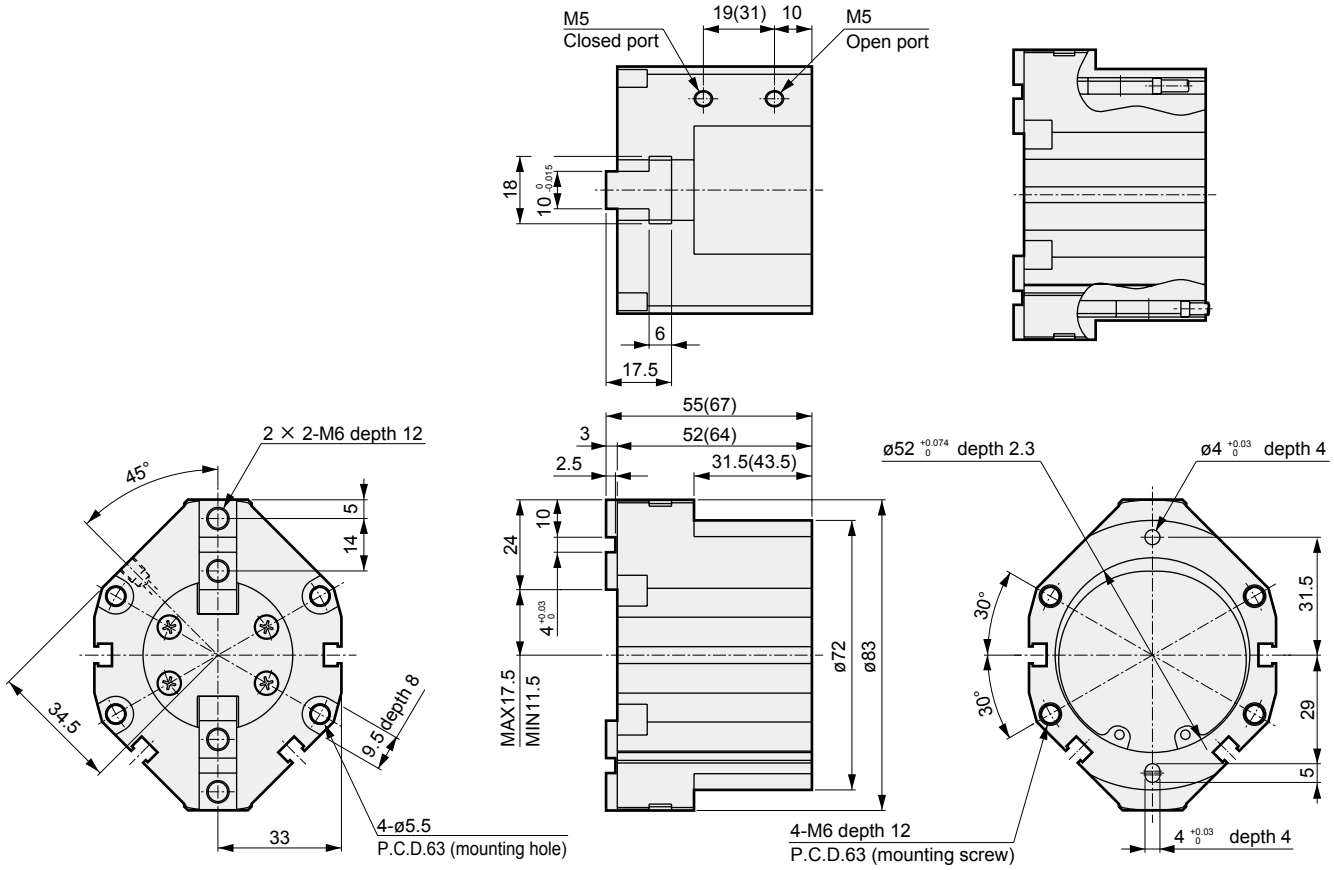

● CKLB2-63CS standard/O/C

· Dimensions in ( ) are for O [normally open] and C [normally closed] specifications.

● With switch

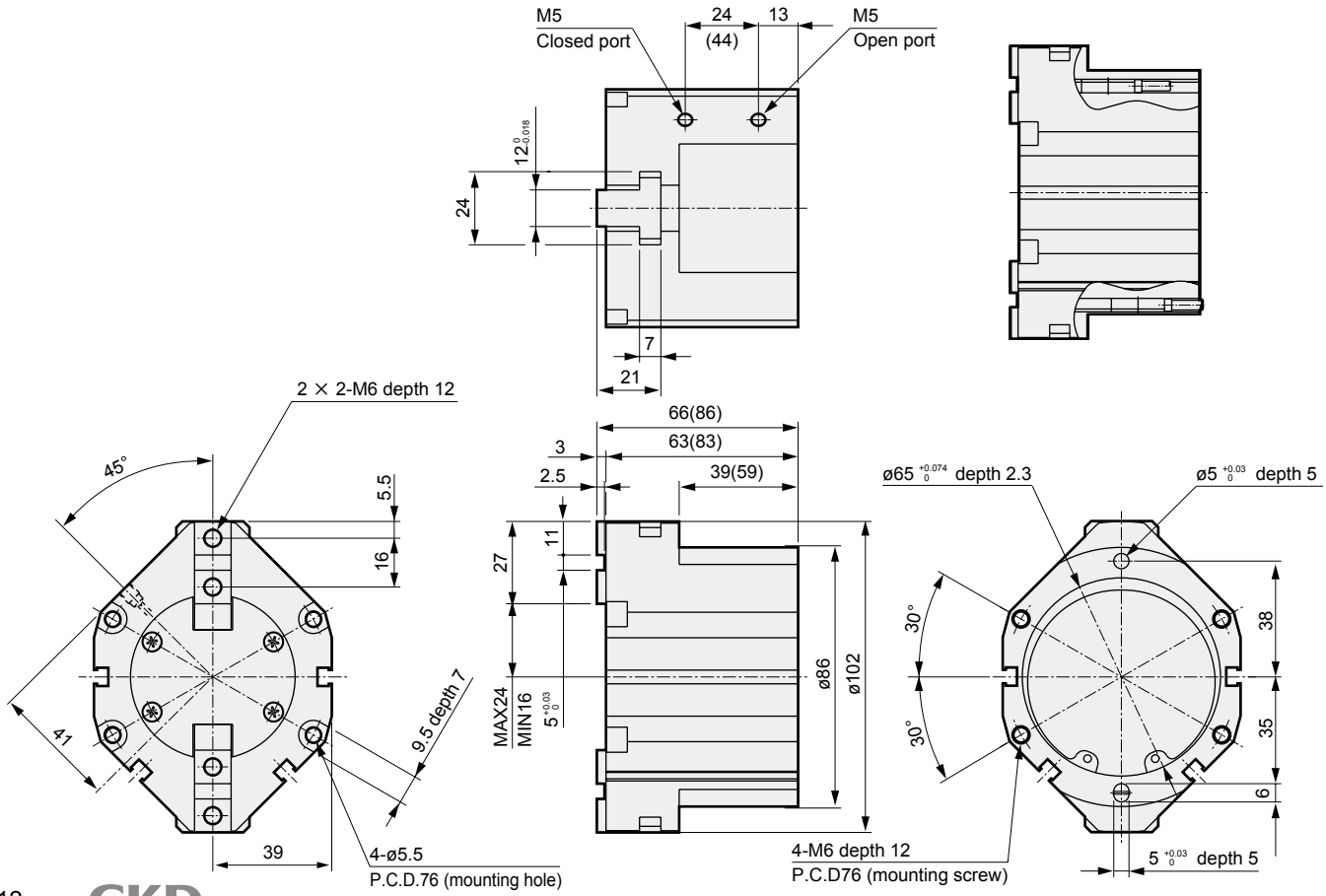

Dimensions

● CKLB2-80CS standard/O/C
· Dimensions in ( ) are for O [normally open] and C [normally closed] specifications.

● With switch

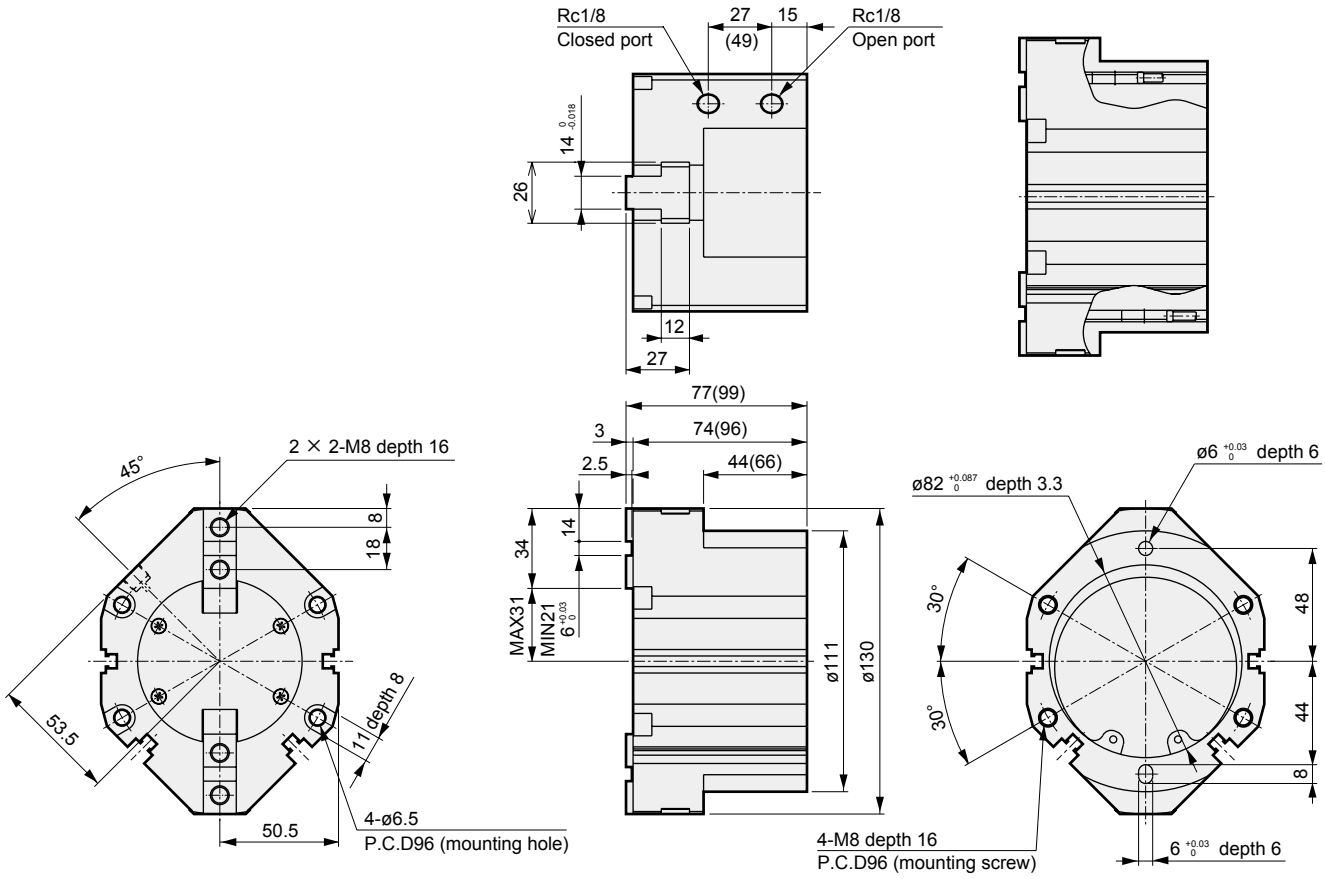

● CKLB2-100CS standard/O/C
· Dimensions in ( ) are for O [normally open] and C [normally closed] specifications.

● With switch

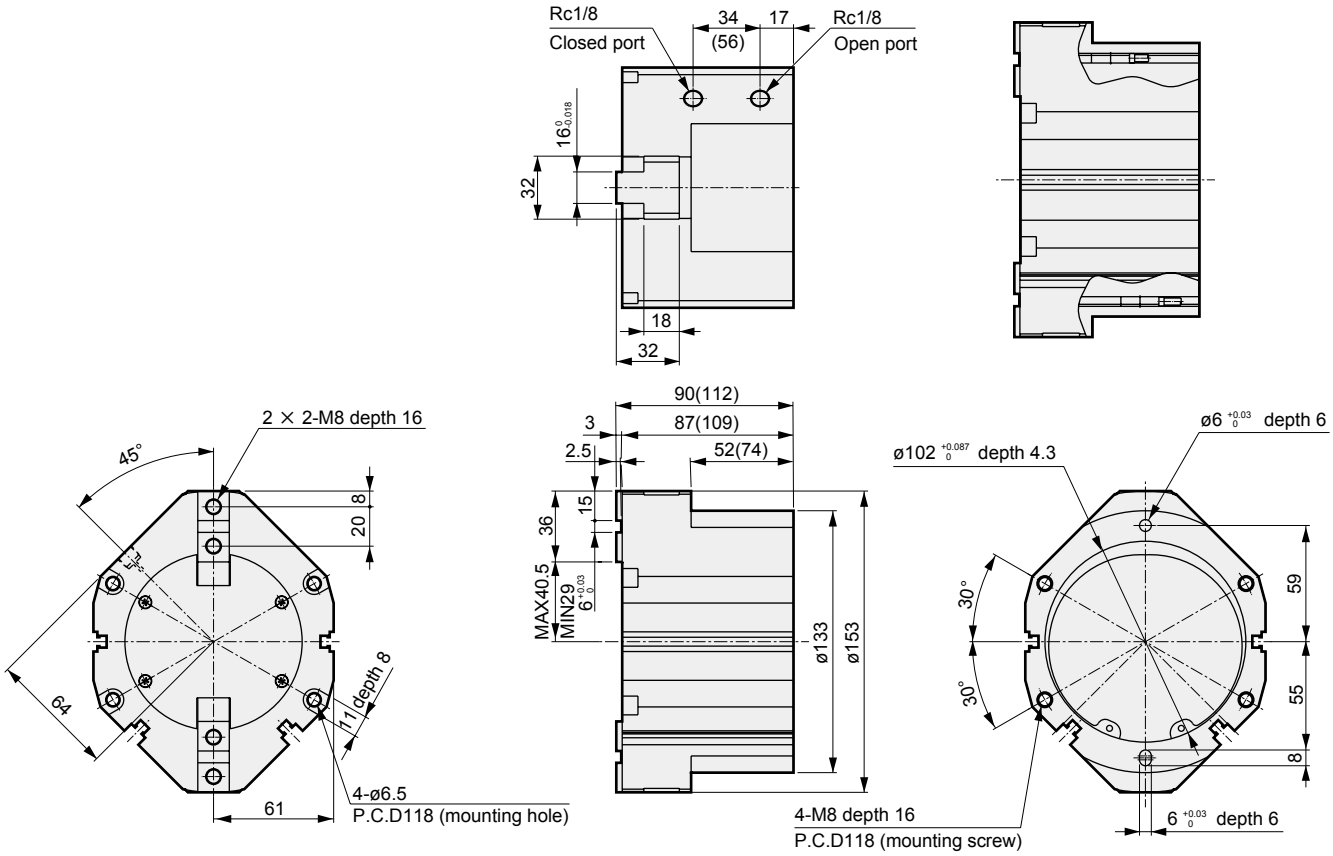

3-way jaw bearing chuck Double acting/single acting

CKG Series

● Operating stroke length: 6, 8, 11, 16 mm

Double acting

Single acting (normally open)

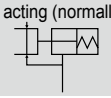

Single acting (normally closed)

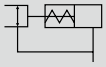

RoHS CAD

Specifications

Item		CKG				
Size		16CS	25CS	32CS	40CS	50CS
Bore size	mm	ø16	ø25	ø32	ø40	ø50
Actuation		Double acting/single acting				
Working fluid		Compressed air				
Max. working pressure	MPa	0.7 (≈100 psi, 7 bar)				
Min. working pressure * MPa	Double acting	0.1 (≈15 psi, 1 bar)				
	Normally open	0.3 (≈44 psi, 3 bar)				
	Normally closed					
Ambient temperature	°C	5 (41°F) to 60 (140°F)				
Port size		M5				
Operating stroke length	mm	6		8	11	16
Rod diameter	mm	ø9	ø10	ø14	ø18	ø20
Volumetric capacity (reciprocating)	cm^3	1.0	2.2	5.1	10.1	36.1
Repeatability	mm	±0.01				
Weight	kg	0.24	0.47	0.80	1.4	2.3
Lubrication		Not required (use turbine oil class 1 ISO VG32 if necessary for lubrication)				

*: When a rubber cover (option) is attached, the min. working pressure is 0.2 MPa for 16CS and 0.15 MPa for 25CS to 50CS.

Switch specifications

Item	Proximity 2-wire	Proximity 3-wire
	T2H/V	T3H/V
Applications	Dedicated for programmable controller	For programmable controller, relay
Output method	-	NPN output
Power supply voltage	-	10 to 28 VDC
Load voltage/current	10 to 30 VDC, 5 to 20 mA (*1)	30 VDC or less, 100 mA or less
Indicator lamp	LED (Lit when ON)	
Leakage current	1 mA or less	10 μA or less
Weight	1 m:18 g 3 m:49 g 5 m:80 g (*2)	

*1 : The above max. load current is 20 mA at 25°C. The current is lower than 20 mA if the operating ambient temperature around the switch is higher than 25°C. (5 to 10 mA at 60°C)
*2 : The weight of switch mounting bracket is 1.5 g.
*3 : Refer to Ending Page 1 for detailed switch specifications and dimensions.

Specifications for rechargeable battery

(Catalog No. CC-1226A)

CKG - ··· - G - P4*

● Design compatible with rechargeable battery manufacturing process.

* Contact CKD for details.

How to order

Without switch (built-in magnet for switch)

CKG - 16CS - O

With switch (built-in magnet for switch)

CKG - 16CS - O - T2H - R

Ⓐ Size

Ⓑ Option *1, *2

Ⓒ Switch model No.

Ⓓ Switch quantity

Code	Description
Ⓐ Size	
16CS	
25CS	
32CS	
40CS	
50CS	
Ⓑ Option	
Blank	Standard (double acting)
O	Single acting (normally open)
C	Single acting (normally closed)
G	With rubber cover (nitrile rubber)
Y11	With attachment (Material S50C) Outer mount chuck (attachment No.: 540 to 710)
Y12	With attachment (Material S50C) Inner mount chuck (attachment No.: 610 to 630)
Y21	With attachment (Material MC nylon) Outer mount chuck (attachment No.: 510 to 540, 710)
Y22	With attachment (Material MC nylon) Inner mount chuck (attachment No.: 610 to 630)

Ⓒ Switch model No.

Axial lead wire	Radial lead wire	Contact	Voltage AC	Voltage DC	Display	Lead wire
T2H*	**T2V***	Proximity		●	1-color display	2-wire
T3H*	**T3V***			●		3-wire

*** Lead wire length**	
Blank	1 m (standard)
3	3 m (option)
5	5 m (option)

Ⓓ Switch quantity	
R	1 on open side
H	1 on closed side
D	2

⚠ Precautions for model No. selection

*1 : Y11 and Y21 are available for CKG-16CS, while Y11, Y12, Y21 and Y22 are available for CKG-25CS to 40CS, and Y11 and Y21 are available for CKG-50CS.

*2 : Refer to pages 1868 and 1869 for the dimensions and compatible model of the attachment. When ordered as an option, three are attached at shipment.

[Example of model No.]

CKG-16CS-O-T2H-R

Model: Bearing chuck

Ⓐ Size : 16CS
Ⓑ Option : Single acting, normally open type
Ⓒ Switch model No.: Proximity T2H switch, lead wire 1 m
Ⓓ Switch quantity : 1 on open side

How to order switch

[T type switch]

SW - T2H

Switch model No.
(Item Ⓒ above)

CKG-50CS only

● For switch T*H*
· Switch body + mounting bracket set

CKG - T2H

Switch model No.
(Item Ⓒ above)

● For switch T*V*
· Switch body + mounting bracket set

CKG - T2V - *

Switch model No.
(Item Ⓒ above)

CKG-50CS only

·Mounting bracket set

CKG - T

·Mounting bracket set

CKG - TV - *

(Select either R (open side) or H (closed side) for sections marked with an asterisk (*).)

LCM
LCR
LCG
LCW
LCX
STM
STG
STS/STL
STR2
UCA2
ULK*
JSK/M2
JSG
JSC3/JSC4
USSD
UFCD
USC
UB
JSB3
LMB
LML
HCM
HCA
LBC
CAC4
UCAC2
CAC-N
UCAC-N
RCS2
RCC2
PCC
SHC
MCP
GLC
MFC
BBS
RRC
GRC
RV3*
NHS
HRL
LN
Hand
Chuk
MecHnd/Chuk
ShkAbs
FJ
FK
SpdContr
Ending
CKL2
CKLG2
CKL2-HC
CKH2
CKLB2
CKG
CK
CKA
CKS
CKS-F
CKF
CKJ
CHC

Internal structure and parts list

● CKG-16CS to 40CS

· Standard ·O (normally open) ·C (normally closed)

● CKG-50CS

· Standard ·O (normally open) ·C (normally closed)

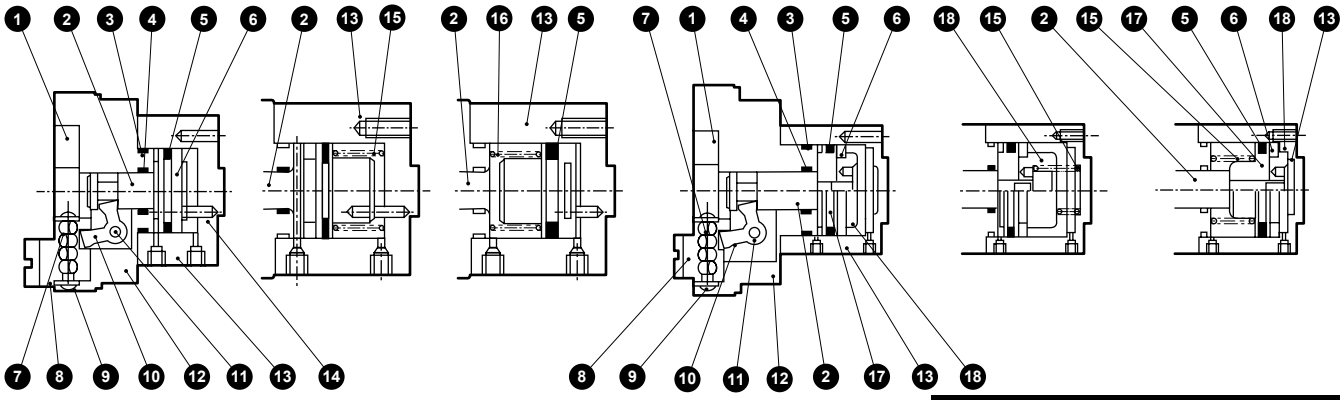

Cannot be disassembled

No.	Part name	Material	Remarks	No.	Part name	Material	Remarks
1	Bearing guide	Steel		10	Arm	Steel	
2	Piston A	Stainless steel		11	Fulcrum axis	Steel	
3	Cylinder gasket	Nitrile rubber		12	Body	Aluminum alloy	
4	Rod packing	Nitrile rubber		13	Cylinder	Aluminum alloy	
5	Piston packing	Nitrile rubber		14	Rotation-stop	Stainless steel	
6	Magnet			15	Spring	Stainless steel	O type
7	Cross roller	Alloy steel		16	Spring	Stainless steel	C type
8	Finger	Steel		17	Piston B	Stainless steel	
9	Bearing holder	Steel		18	Piston C	Stainless steel	

Gripping power performance data

- Gripping power represents the thrust (per one finger) in the arrow direction shown in the figure.
- The gripping power in the opening/closing directions with jaw length L of hand with a supply pressure of 0.3, 0.5 and 0.7 MPa is shown.
  - ● Open direction (⇦) - - - - - (shown with broken line)
  - ● Closed direction (➡) ——— (shown with continuous line)

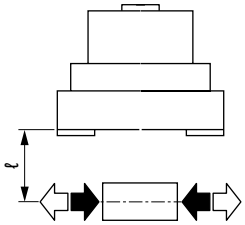

(Note) O type gripping power decreases approximately 20 to 30% in the closed direction compared to double acting.
C type gripping power decreases approximately 10 to 20% in the open direction compared to the double acting.
When making a selection, read the precautions for design and selection on page 1872.

● CKG-16CS

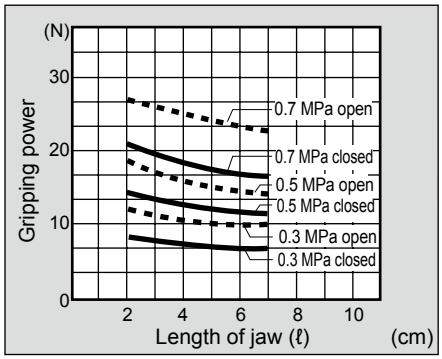

● CKG-25CS

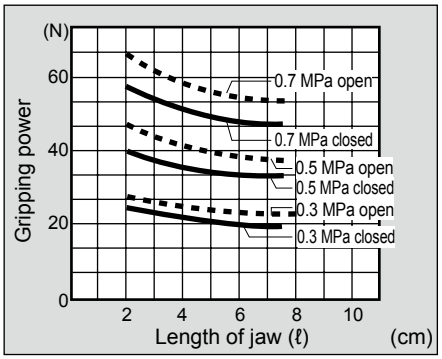

● CKG-32CS

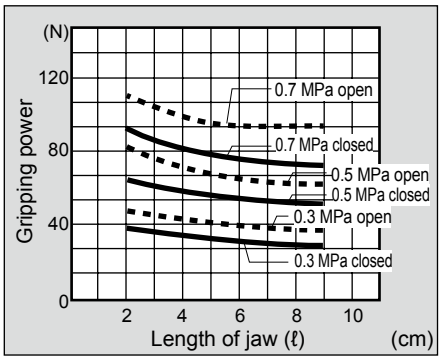

● CKG-40CS

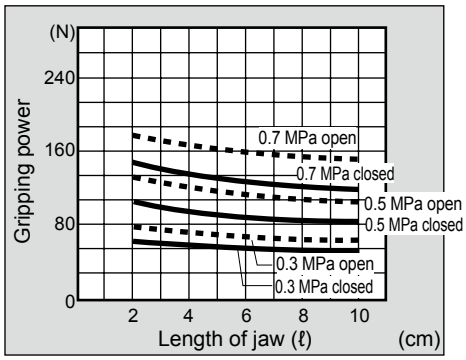

● CKG-50CS

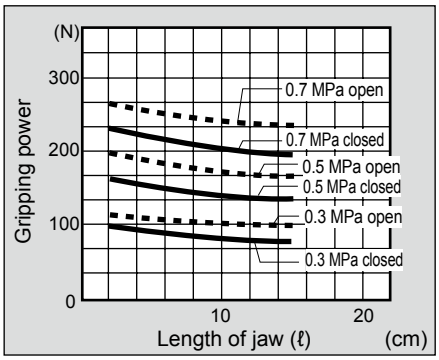

Dimensions

● CKG-16CS standard/O/C

· Dimensions in ( ) are for O [normally open] and C [normally closed] specifications.

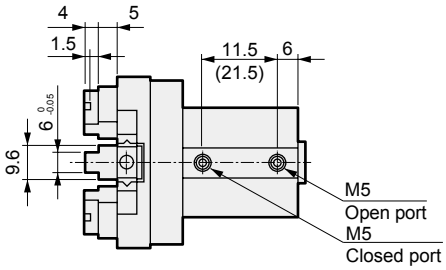

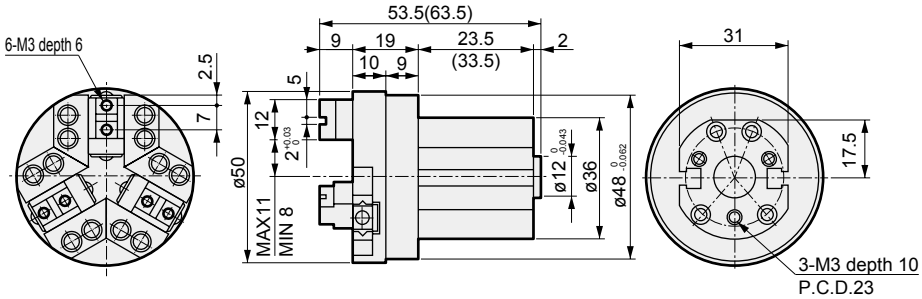

● With switch

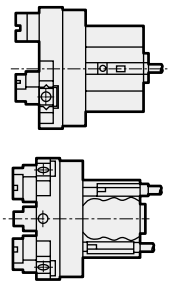

Note: When using T□H or T□V, the switches of both project from the end face of body head side.

● With rubber cover

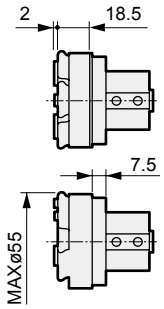

● CKG-25CS standard/O/C

· Dimensions in ( ) are for O [normally open] and C [normally closed] specifications.

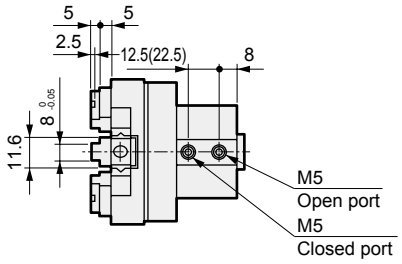

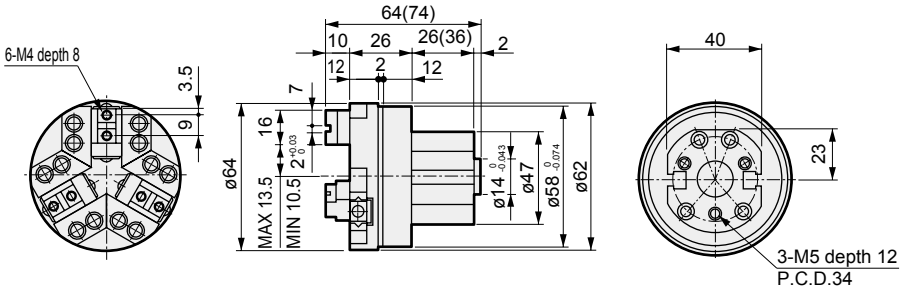

● With switch

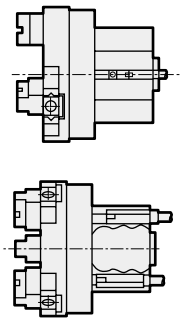

● With rubber cover

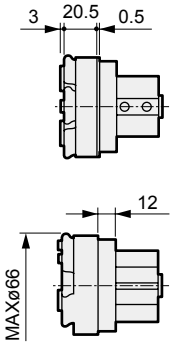

LCM
LCR
LCG
LCW
LCX
STM
STG
STS/STL
STR2
UCA2
ULK*
JSK/M2
JSG
JSC3/JSC4
USSD
UFCD
USC
UB
JSB3
LMB
LML
HCM
HCA
LBC
CAC4
UCAC2
CAC-N
UCAC-N
RCS2
RCC2
PCC
SHC
MCP
GLC
MFC
BBS
RRC
GRC
RV3*
NHS
HRL
LN
Hand
Chuk
MecHnd/Chuk
ShkAbs
FJ
FK
SpdContr
Ending
CKL2
CKLG2
CKL2-HC
CKH2
CKLB2
CKG
CK
CKA
CKS
CKS-F
CKF
CKJ
CHC

Dimensions CAD

● CKG-32CS standard/O/C

· Dimensions in ( ) are for O [normally open] and C [normally closed] specifications.

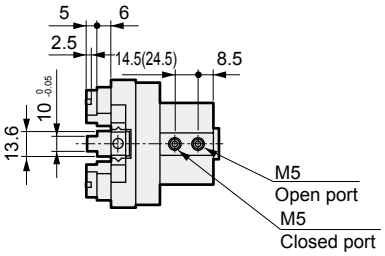

● With switch

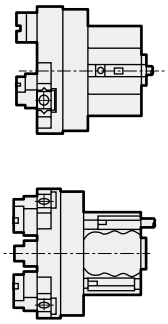

● With rubber cover

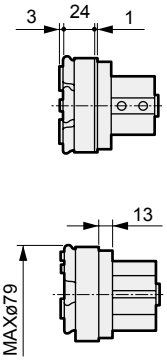

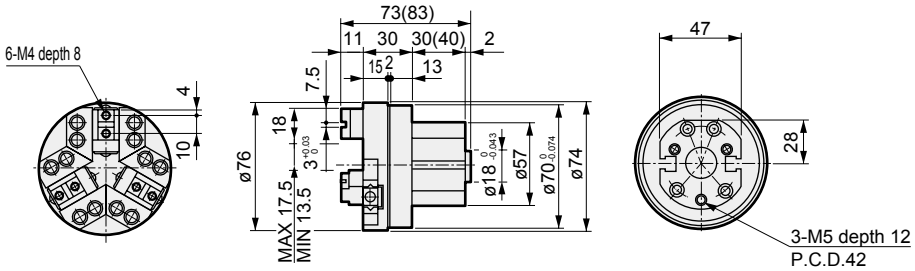

● CKG-40CS standard/O/C

· Dimensions in ( ) are for O [normally open] and C [normally closed] specifications.

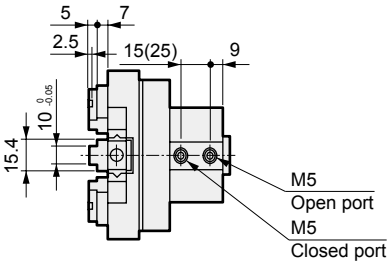

● With switch

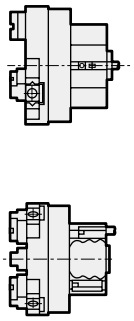

● With rubber cover

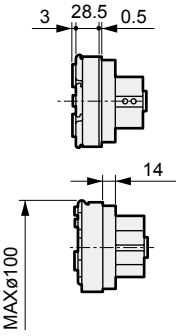

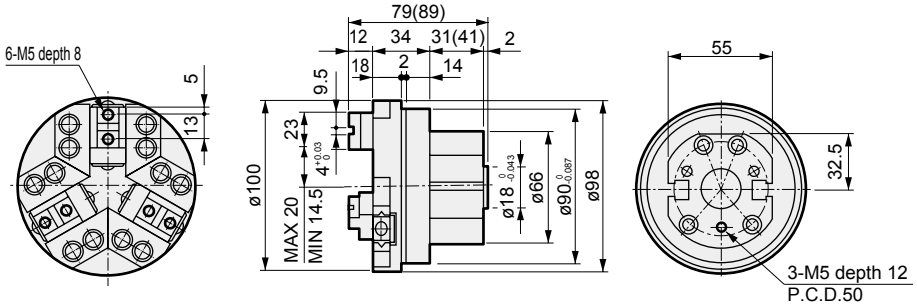

Dimensions

● CKG-50CS standard/O/C

· Dimensions in ( ) are for O [normally open] and C [normally closed] specifications.

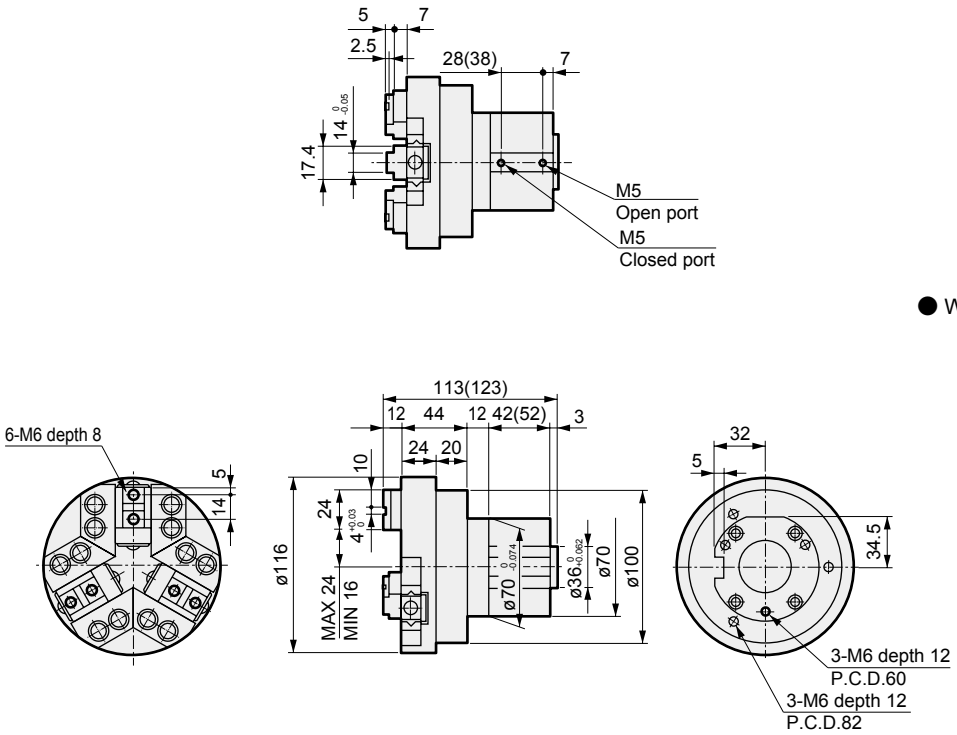

● With switch

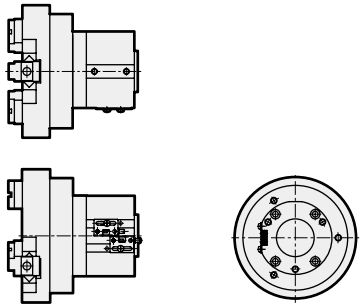

● With rubber cover

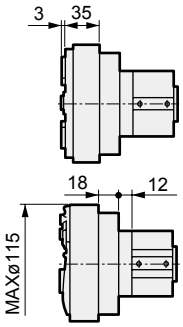

3-way jaw long stroke chuck Double acting/single acting

CK Series

● Operating stroke length: 20, 40 mm

Double acting

Single acting (normally open)

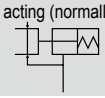

Single acting (normally closed)

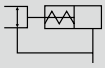

RoHS CAD

Specifications

Item		CK		
Size		1CS	1.5CS	2CS
Bore size	mm	ø25	ø44	
Actuation		Double acting/single acting		
Working fluid		Compressed air		
Max. working pressure	MPa	0.7 (≈100 psi, 7 bar)		
Min. working pressure	MPa	0.3 (≈44 psi, 3 bar)		
Ambient temperature	°C	5 (41°F) to 60 (140°F)		
Port size		M5	Rc1/8	
Operating stroke length	mm	20		40
Rod diameter	mm	ø12	ø16	
Volumetric capacity (reciprocating)	cm^3	7.9	26.4	52.8
Repeatability	mm	±0.03		
Weight	kg	0.85	1.90	2.90
Lubrication		Not required (use turbine oil class 1 ISO VG32 if necessary for lubrication)		

Switch specifications

Item	Proximity 2-wire	Proximity 3-wire
	T2H/V	T3H/V
Applications	Dedicated for programmable controller	For programmable controller, relay
Output method	-	NPN output
Power supply voltage	-	10 to 28 VDC
Load voltage/current	10 to 30 VDC, 5 to 20 mA (*1)	30 VDC or less, 100 mA or less
Indicator lamp	LED (Lit when ON)	
Leakage current	1 mA or less	10 μA or less
Weight	1 m:18 g 3 m:49 g 5 m:80 g	

*1 : The above max. load current is 20 mA at 25°C. The current is lower than 20 mA if the operating ambient temperature around the switch is higher than 25˚C. (5 to 10 mA at 60˚C)

*2 : Refer to Ending Page 1 for detailed switch specifications and dimensions.

How to order

Without switch (built-in magnet for switch)

CK - 1CS - O

With switch (built-in magnet for switch)

CK - 1CS - O - T3H - R

Ⓐ Size

Ⓑ Option *1

Ⓒ Switch model No.

Ⓓ Switch quantity

Code	Description
Ⓐ Size	
1CS	
1.5CS	
2CS	
Ⓑ Option	
Blank	Standard (double acting)
O	Single acting (normally open)
C	Single acting (normally closed)
Y1	With attachment (Material S50C)
Y2	With attachment (Material MC nylon)

Ⓒ Switch model No.

Axial lead wire	Radial lead wire	Contact	Voltage AC	Voltage DC	Display	Lead wire
T2H*	T2V*	Proximity		●	1-color display	2-wire
T3H*	T3V*			●		3-wire

* Lead wire length	
Blank	1 m (standard)
3	3 m (option)
5	5 m (option)

Ⓓ Switch quantity	
R	1 on open side
H	1 on closed side
D	2

⚠ Precautions for model No. selection

*1: Refer to pages 1868 and 1869 for the dimensions and compatible model of the attachment. When ordered as an option, three are attached at shipment.

[Example of model No.]

CK-1CS-O-T3H-R

Model: Long stroke chuck

Ⓐ Size : 1CS
Ⓑ Option : Single acting, normally open
Ⓒ Switch model No.: Proximity T3H switch, lead wire 1 m
Ⓓ Switch quantity : 1 on open side

How to order switch

SW - T2H

Switch model No.
(Item Ⓒ above)

LCM
LCR
LCG
LCW
LCX
STM
STG
STS/STL
STR2
UCA2
ULK*
JSK/M2
JSG
JSC3/JSC4
USSD
UFCD
USC
UB
JSB3
LMB
LML
HCM
HCA
LBC
CAC4
UCAC2
CAC-N
UCAC-N
RCS2
RCC2
PCC
SHC
MCP
GLC
MFC
BBS
RRC
GRC
RV3*
NHS
HRL
LN
Hand
Chuk
MecHnd/Chuk
ShkAbs
FJ
FK
SpdContr
Ending
CKL2
CKLG2
CKL2-HC
CKH2
CKLB2
CKG
CK
CKA
CKS
CKS-F
CKF
CKJ
CHC

Internal structure and parts list

● Standard (double acting) ● O (normally open) ● C (normally closed)

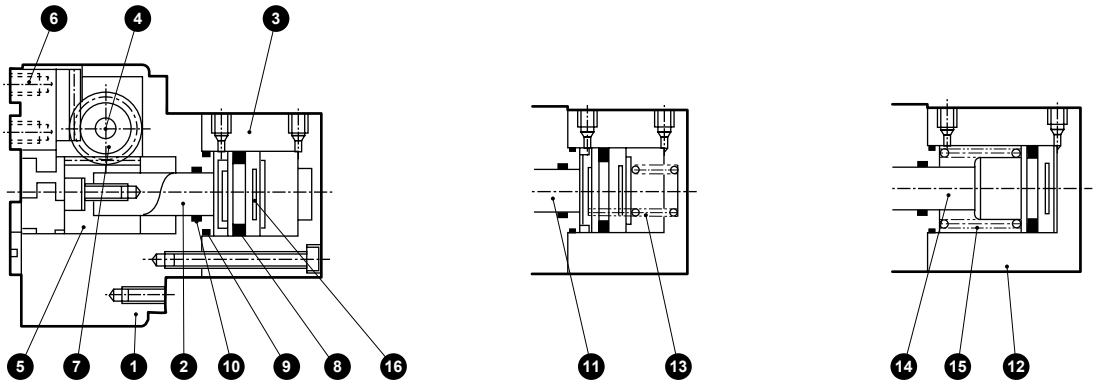

Cannot be disassembled

No.	Part name	Material	Remarks	No.	Part name	Material	Remarks
1	Chuck body	Aluminum alloy		10	Rod packing	Nitrile rubber	
2	Piston	Steel		11	Piston	Steel	
3	Cylinder	Aluminum alloy		12	Cylinder	Aluminum alloy	
4	Pinion gear shaft	Steel		13	Spring	Stainless steel	
5	Rack	Steel		14	Piston	Steel	
6	Finger	Steel		15	Spring	Stainless steel	
7	Pinion gear	Steel		16	Magnet	MC	Nickeling
8	Piston packing	Nitrile rubber					
9	Cylinder gasket	Nitrile rubber					

Gripping power performance data

- Gripping power represents the thrust (per one finger) in the arrow direction shown in the figure.
- The gripping power in the opening/closing directions with jaw length L of hand with a supply pressure of 0.3, 0.5 and 0.7 MPa is shown.

● Open direction (⇦) - - - - - - (shown with broken line)
● Closed direction (➡) ——— (shown with continuous line)

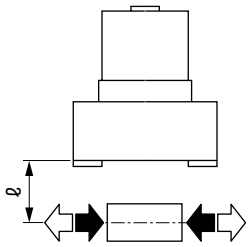

(Note) O type gripping power decreases approximately 20 to 30% in the closed direction compared to double acting.
C type gripping power decreases approximately 10 to 20% in the open direction compared to the double acting.
When making a selection, read the precautions for design and selection on page 1872.

● CK-1CS

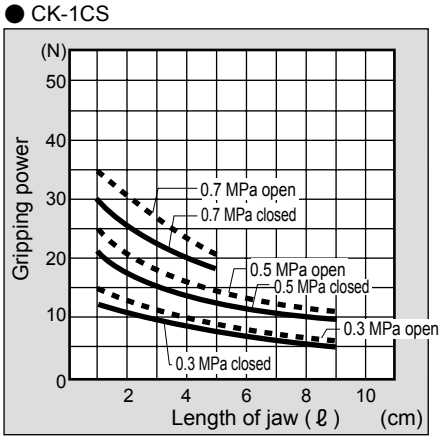

● CK-1.5CS

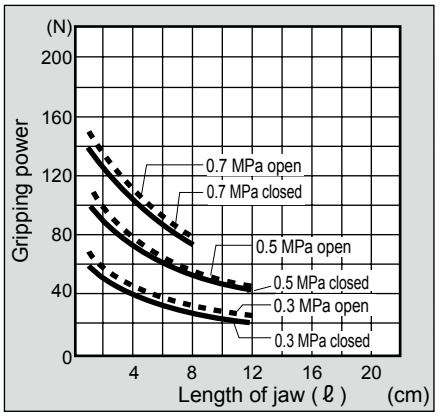

● CK-2CS

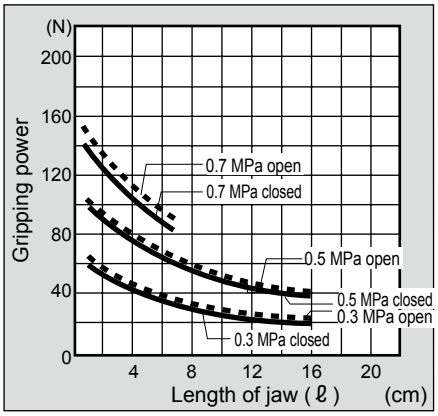

Dimensions

● CK-1CS standard/O/C

● Dimensions in ( ) are for C [normally closed] specifications.

● With switch

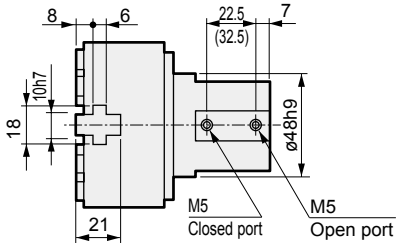

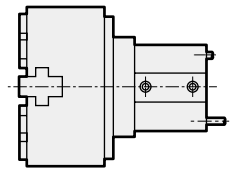

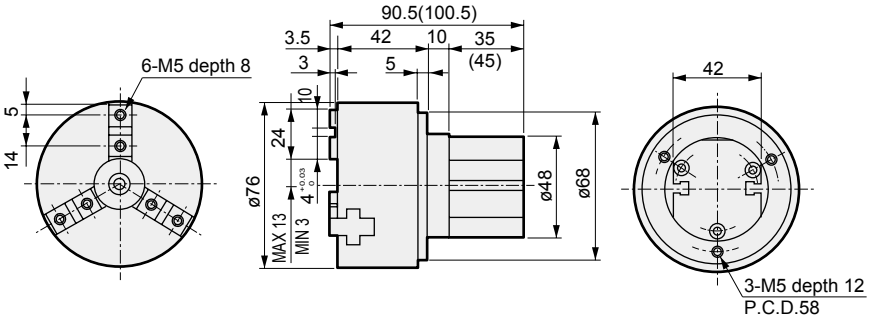

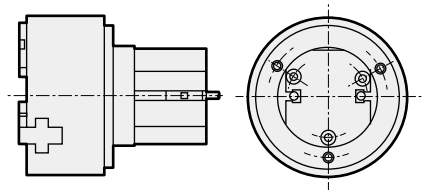

● CK-1.5CS standard/O/C

● Dimensions in ( ) are for C [normally closed] specifications.

● With switch

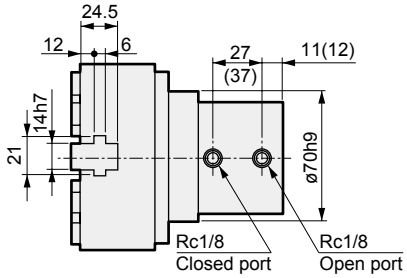

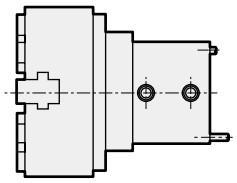

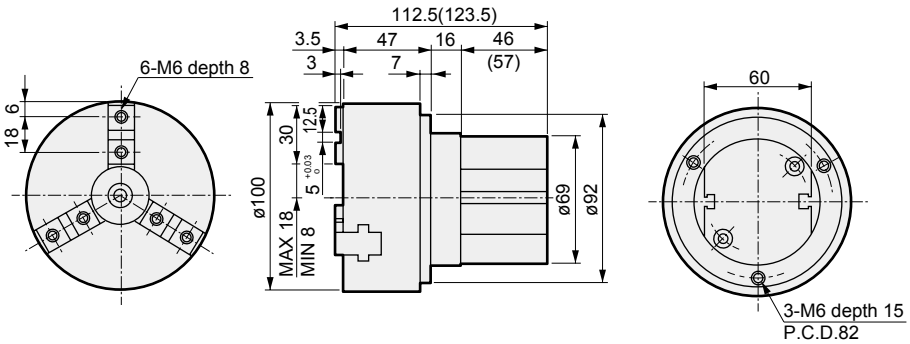

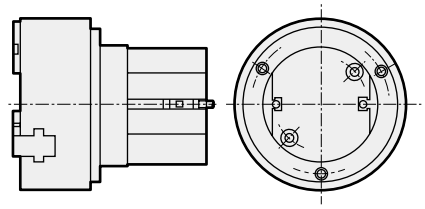

LCM
LCR
LCG
LCW
LCX
STM
STG
STS/STL
STR2
UCA2
ULK*
JSK/M2
JSG
JSC3/JSC4
USSD
UFCD
USC
UB
JSB3
LMB
LML
HCM
HCA
LBC
CAC4
UCAC2
CAC-N
UCAC-N
RCS2
RCC2
PCC
SHC
MCP
GLC
MFC
BBS
RRC
GRC
RV3*
NHS
HRL
LN
Hand
Chuk
MecHnd/Chuk
ShkAbs
FJ
FK
SpdContr
Ending
CKL2
CKLG2
CKL2-HC
CKH2
CKLB2
CKG
CK
CKA
CKS
CKS-F
CKF
CKJ
CHC

Dimensions

● CK-2CS standard/O/C

● Dimensions in ( ) are for C [normally closed] specifications.

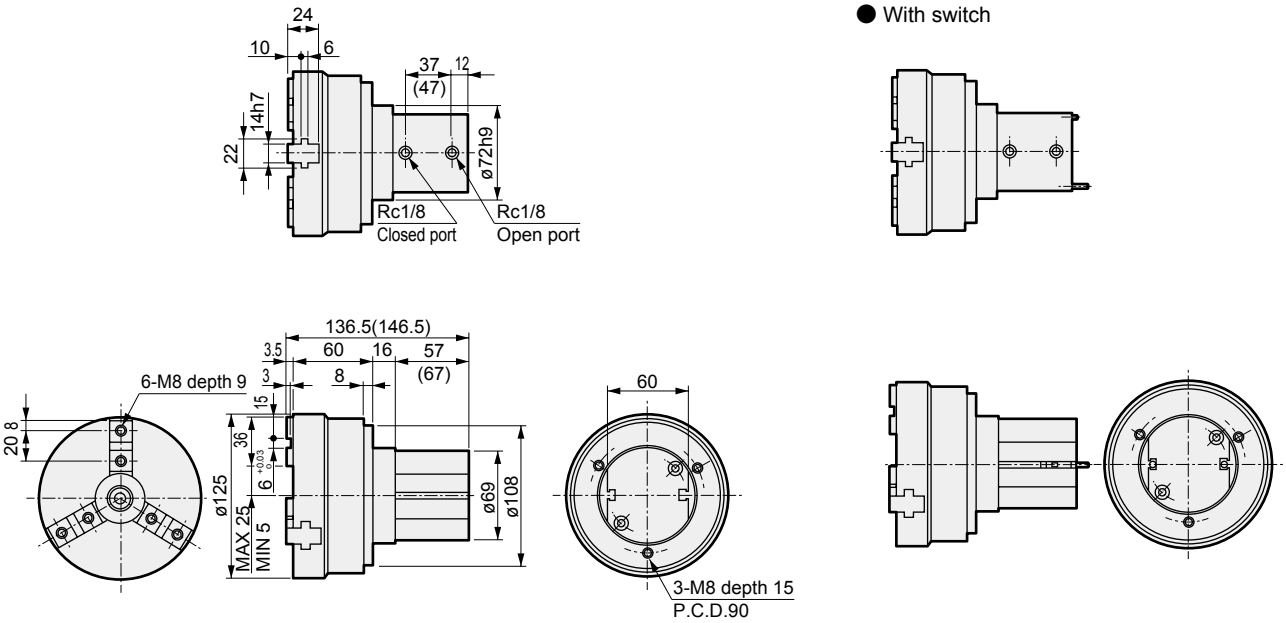

MEMO

3-way jaw thin chuck Double acting/single acting

CKA Series

● Operational stroke length: 5, 6, 7, 9, 20, 25, 30, 38mm

Double acting

Single acting (normally open)

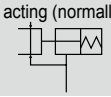

Single acting (normally closed)

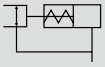

RoHS CAD

Specifications

Item		CKA							
Size		15CS	20CS	25CS	30CS	40CS	50CS	60CS	70CS
Bore size	mm	ø16	ø25	ø32	ø40	ø50	ø63	ø80	ø100
Actuation		Double acting/single acting							
Working fluid		Compressed air							
Max. working pressure	MPa	0.7 (≈100 psi, 7 bar)							
Min. working pressure	MPa	0.3 (≈44 psi, 3 bar)							
Ambient temperature	°C	5 (41°F) to 60 (140°F)							
Port size		M5						Rc1/8	
Operating stroke length	mm	6	5	7	9	20	25	30	38
Rod diameter	mm	ø9	ø10	ø14	ø18	ø20		ø24	ø28
Volumetric capacity (reciprocating)	cm^3	1.0	2.2	5.1	10.1	36.1	76.9	148.8	294.0
Repeatability	mm	±0.03							
Weight	kg	0.11	0.25	0.42	0.61	1.41	2.6	4.5	6.4
Lubrication		Not required (use turbine oil class 1 ISO VG32 if necessary for lubrication)							

Switch specifications

Item	Proximity 2-wire	Proximity 3-wire
	T2H/V	T3H/V
Applications	Dedicated for programmable controller	For programmable controller, relay
Output method	-	NPN output
Power supply voltage	-	10 to 28 VDC
Load voltage/current	10 to 30 VDC, 5 to 20 mA (*1)	30 VDC or less, 100 mA or less
Indicator lamp	LED (Lit when ON)	
Leakage current	1 mA or less	10 μA or less
Weight	1 m:18 g 3 m:49 g 5 m:80 g (*2)	

*1 : The above max. load current is 20 mA at 25°C. The current is lower than 20 mA if the operating ambient temperature around the switch is higher than 25°C. (5 to 10 mA at 60°C)
*2 : The weight of switch mounting bracket is 1.5 g.
*3 : Refer to Ending Page 1 for detailed switch specifications and dimensions.

How to order

Without switch (built-in magnet for switch)

CKA - 15CS - O

With switch (built-in magnet for switch)

CKA - 15CS - O - T2H - R

Ⓐ Size

Ⓑ Option *1, *2

Ⓒ Switch model No. *3

Ⓓ Switch quantity

Code	Description
Ⓐ Size	
15CS	
20CS	
25CS	
30CS	
40CS	
50CS	
60CS	
70CS	

Ⓑ Option	
Blank	Standard (double acting)
O	Single acting (normally open)
C	Single acting (normally closed)
Y11	With attachment (Material S50C) Outer mount chuck (attachment No.: 510 to 540, 710 to 770)
Y12	With attachment (Material S50C) Inner mount chuck (attachment No.: 610 to 630)
Y21	With attachment (Material MC nylon) Outer mount chuck (attachment No.: 510 to 540, 710 to 770)
Y22	With attachment (Material MC nylon) Inner mount chuck (attachment No.: 610 to 630)

Ⓒ Switch model No.

Axial lead wire	Radial lead wire	Contact	Voltage AC	Voltage DC	Display	Lead wire
T2H*	T2V*	Proximity		●	1-color	2-wire
T3H*	T3V*	Proximity		●	display	3-wire

*** Lead wire length**	
Blank	1 m (standard)
3	3 m (option)
5	5 m (option)

Ⓓ Switch quantity	
R	1 on open side
H	1 on closed side
D	2

⚠ Precautions for model No. selection

*1 : Y11 and Y21 are available for CKA-15CS, while Y12 and Y22 are available for CKA-20CS to 40CS, and Y11 and Y21 are available for CKA-50 to 70CS.

*2 : For the dimensions and compatible model of the attachment, refer to pages 1868 and 1869. When ordered as an option, three are attached at shipment.

*3 : As the switch groove of 50CS to 70CS has a different shape, a mounting bracket is required when ordering an individual switch.

[Example of model No.]

CKA-15CS-O-T2H-R

Model: Thin chuck

Ⓐ Size :15CS
Ⓑ Option : Single acting, normally open
Ⓒ Switch model No.: Proximity T2H switch, lead wire 1 m
Ⓓ Switch quantity : 1 on open side

How to order switch

[T type switch]

SW - T2H

Switch model No. (Item Ⓒ above)

CKA-50CS to 70CS

● For switch T*H*

· Switch body + mounting bracket set

CKA - T2H

Switch model No. (Item Ⓒ above)

CKA-50CS to 70CS

·Mounting bracket set

CKA - T

● For switch T*V*

· Switch body + mounting bracket set

CKA - T2V - *

Switch model No. (Item Ⓒ above)

·Mounting bracket set

CKA - TV - *

(Select either R (open side) or H (closed side) for sections marked with an asterisk (*).)

Note) When the type with two switches is selected, if the model has a short operational stroke length, both switches may turn ON depending on the workpiece size.

LCM
LCR
LCG
LCW
LCX
STM
STG
STS/STL
STR2
UCA2
ULK*
JSK/M2
JSG
JSC3/JSC4
USSD
UFCD
USC
UB
JSB3
LMB
LML
HCM
HCA
LBC
CAC4
UCAC2
CAC-N
UCAC-N
RCS2
RCC2
PCC
SHC
MCP
GLC
MFC
BBS
RRC
GRC
RV3*
NHS
HRL
LN
Hand
Chuk
MecHnd/Chuk
ShkAbs
FJ
FK
SpdContr
Ending
CKL2
CKLG2
CKL2-HC
CKH2
CKLB2
CKG
CK
CKA
CKS
CKS-F
CKF
CKJ
CHC

Internal structure and parts list

● CKA-15CS

Standard (double acting)

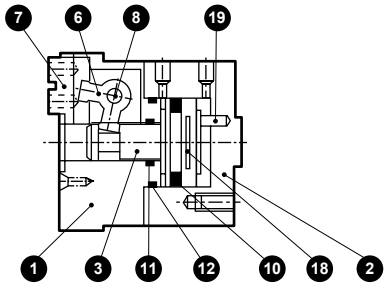

O (normally open)

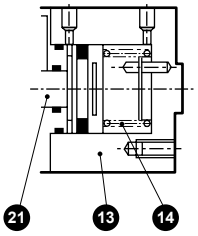

C (normally closed)

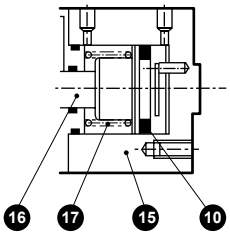

● CKA-20CS to 40CS

Standard (double acting)

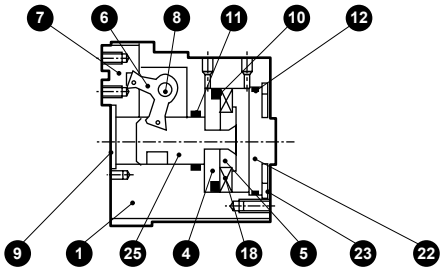

O (normally open)

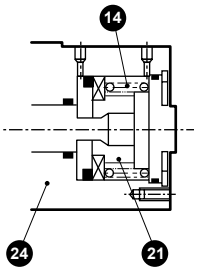

C (normally closed)

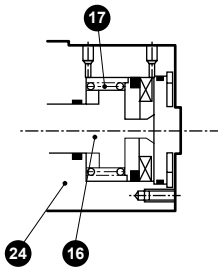

● CKA-50CS to 70CS

Standard (double acting)/O (normally open)

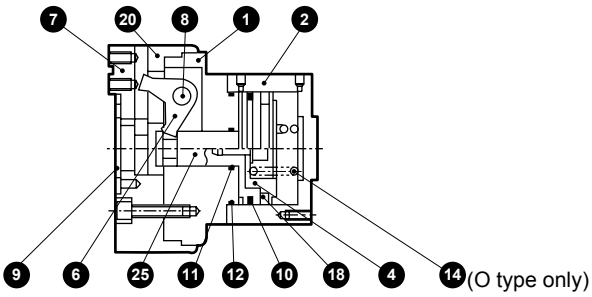

C (normally closed)

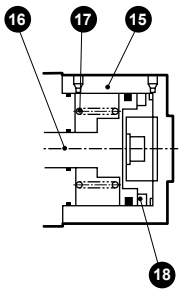

Cannot be disassembled

No.	Part name	Material	No.	Part name	Material	No.	Part name	Material	No.	Part name	Material
1	Body	Aluminum alloy	8	Fulcrum axis	Steel	15	C cylinder	Aluminum alloy	22	Cylinder guard	Aluminum alloy
2	Cylinder	Aluminum alloy	9	Center guard	Stainless steel	16	C piston rod	Stainless steel	23	Snap ring	Stainless steel
3	Piston A	Stainless steel	10	Piston packing	Nitrile rubber	17	C spring	Steel	24	O, C body	Aluminum alloy
4	Piston B	Aluminum alloy	11	Rod packing	Nitrile rubber	18	Magnet	Plastic magnet	25	Piston	Aluminum alloy
5	Piston C	Aluminum alloy	12	Cylinder gasket	Nitrile rubber	19	Rotation-stop pin	Stainless steel			
6	Arm	Steel	13	O cylinder	Aluminum alloy	20	Chuck cover	Aluminum alloy			
7	Finger	Steel	14	O spring	Steel	21	O piston B	Stainless steel			

Note) Structures differ to some extent by model.

Gripping power performance data

- Gripping power represents the thrust (per one finger) in the arrow direction shown in the figure.
- The gripping power in the opening/closing directions with jaw length L of hand with a supply pressure of 0.3, 0.5 and 0.7 MPa is shown.

● Open direction (⇦) - - - - - - - (shown with broken line)
● Closed direction (➡) ——— (shown with continuous line)

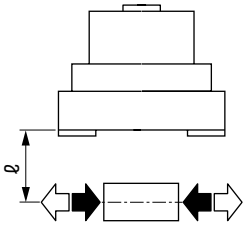

(Note) O type gripping power decreases approximately 20 to 30% in the closed direction compared to double acting.
C type gripping power decreases approximately 10 to 20% in the open direction compared to the double acting.
When making a selection, read the precautions for design and selection on page 1872.

● CKA-15CS

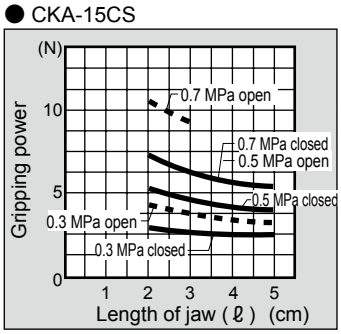

● CKA-20CS

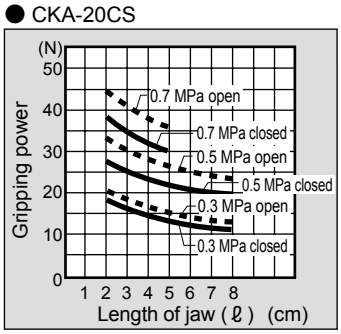

● CKA-25CS

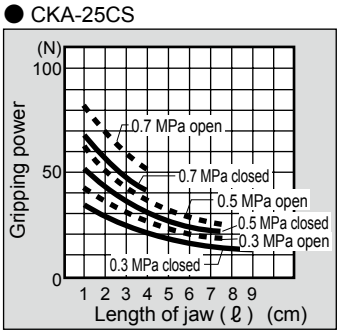

● CKA-30CS

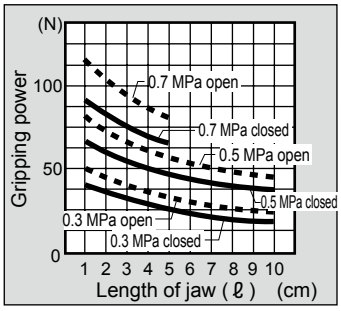

● CKA-40CS

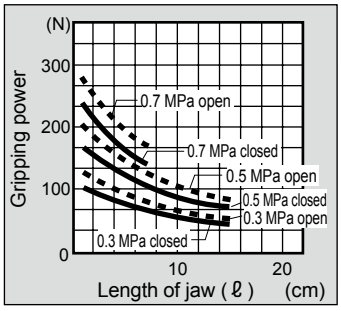

● CKA-50CS

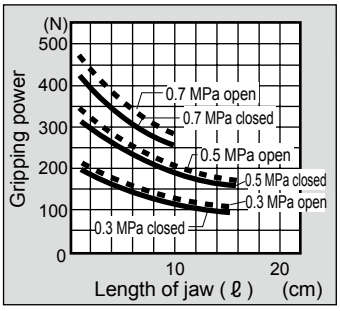

● CKA-60CS

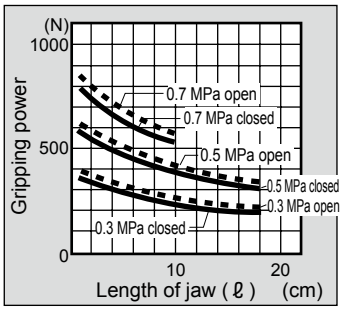

● CKA-70CS

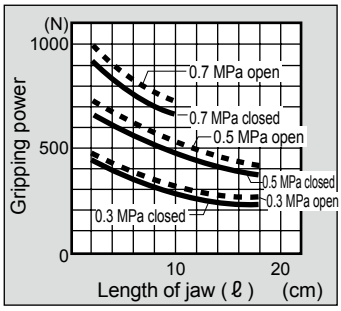

LCM
LCR
LCG
LCW
LCX
STM
STG
STS/STL
STR2
UCA2
ULK*
JSK/M2
JSG
JSC3/JSC4
USSD
UFCD
USC
UB
JSB3
LMB
LML
HCM
HCA
LBC
CAC4
UCAC2
CAC-N
UCAC-N
RCS2
RCC2
PCC
SHC
MCP
GLC
MFC
BBS
RRC
GRC
RV3*
NHS
HRL
LN
Hand
Chuk
MecHnd/Chuk
ShkAbs
FJ
FK
SpdContr
Ending
CKL2
CKLG2
CKL2-HC
CKH2
CKLB2
CKG
CK
CKA
CKS
CKS-F
CKF
CKJ
CHC

Dimensions

● CKA-15CS standard/O/C

● Dimensions in ( ) are for O [normally open] and C [normally closed] specifications.

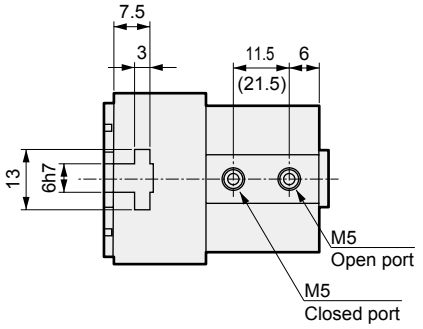

● With switch

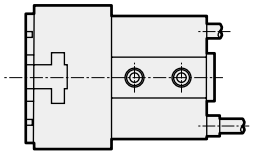

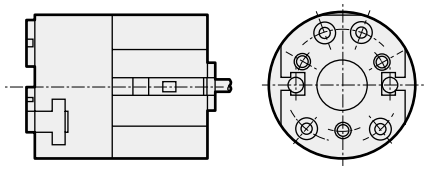

Note: When using T□H or T□V, the switches of both project from the end face of body head side.

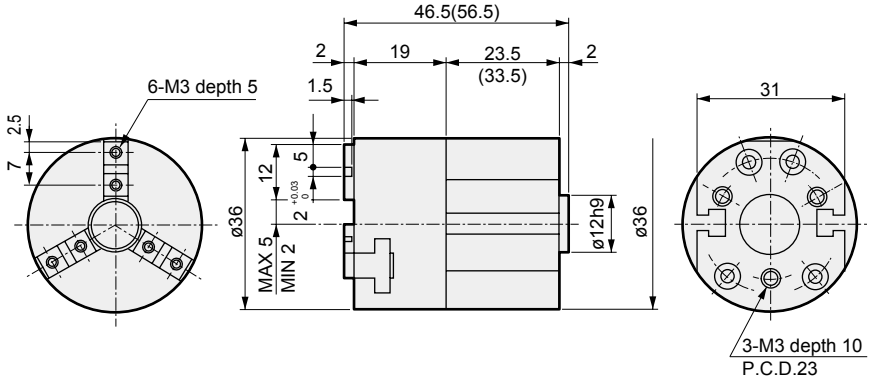

● CKA-20CS standard/O/C

● Dimensions in ( ) are for O [normally open] and C [normally closed] specifications.

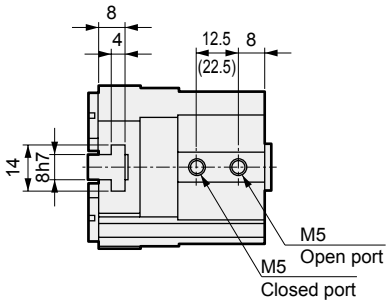

● With switch

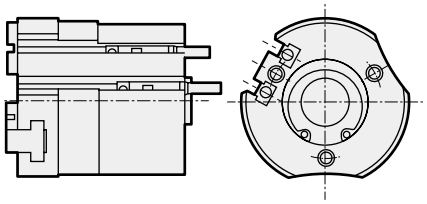

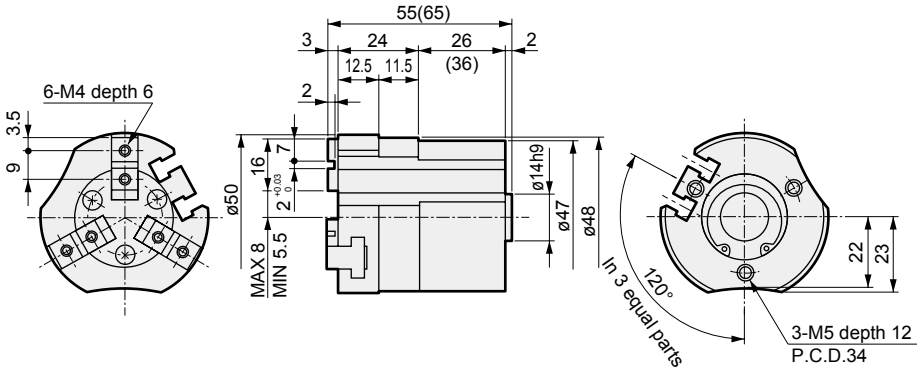

Dimensions

● CKA-25CS standard/O/C

● Dimensions in ( ) are for O [normally open] and C [normally closed] specifications.

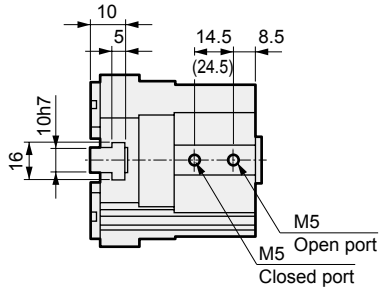

● With switch

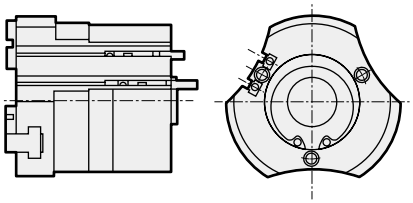

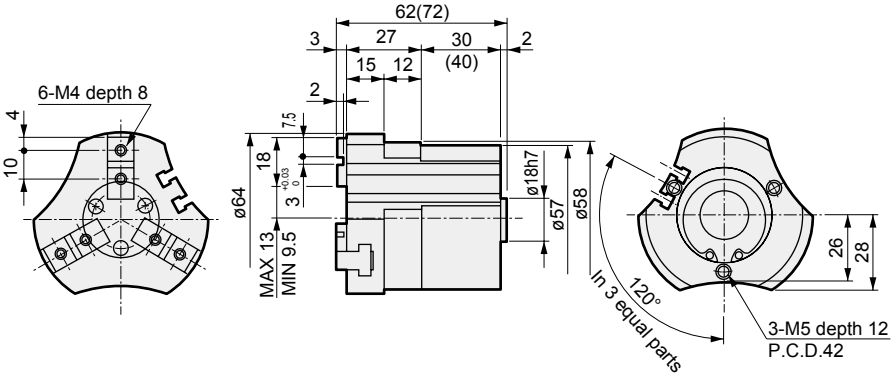

● CKA-30CS standard/O/C

● Dimensions in ( ) are for O [normally open] and C [normally closed] specifications.

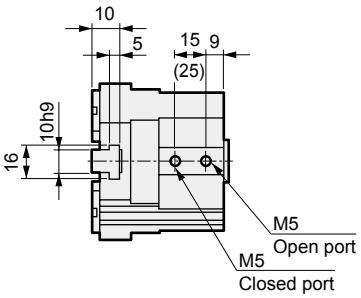

● With switch

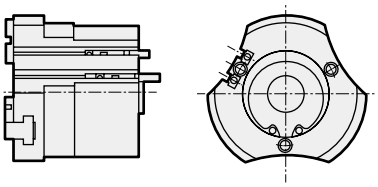

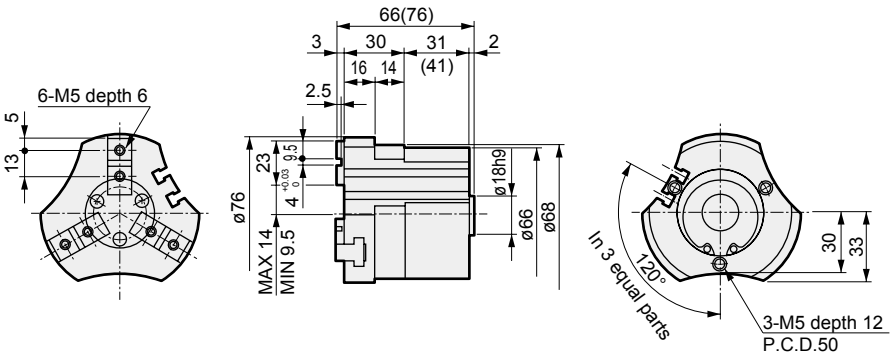

LCM
LCR
LCG
LCW
LCX
STM
STG
STS/STL
STR2
UCA2
ULK*
JSK/M2
JSG
JSC3/JSC4
USSD
UFCD
USC
UB
JSB3
LMB
LML
HCM
HCA
LBC
CAC4
UCAC2
CAC-N
UCAC-N
RCS2
RCC2
PCC
SHC
MCP
GLC
MFC
BBS
RRC
GRC
RV3*
NHS
HRL
LN
Hand
Chuk
MecHnd/Chuk
ShkAbs
FJ
FK
SpdContr
Ending
CKL2
CKLG2
CKL2-HC
CKH2
CKLB2
CKG
CK
CKA
CKS
CKS-F
CKF
CKJ
CHC

Dimensions CAD

● CKA-40CS standard/O/C

● Dimensions in ( ) are for O [normally open] and C [normally closed] specifications.

● With switch

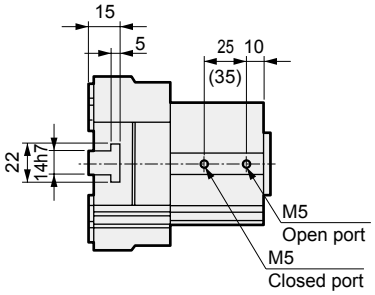

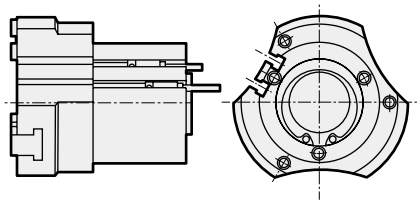

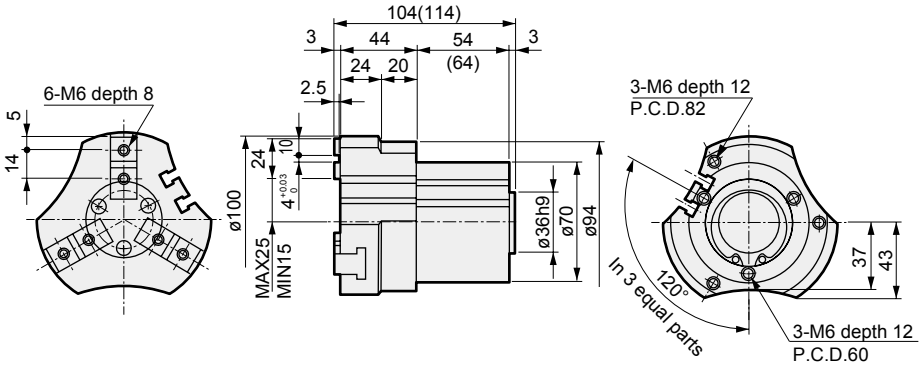

● CKA-50CS standard/O/C

● Dimensions in ( ) are for [normally closed] specifications.

● With switch

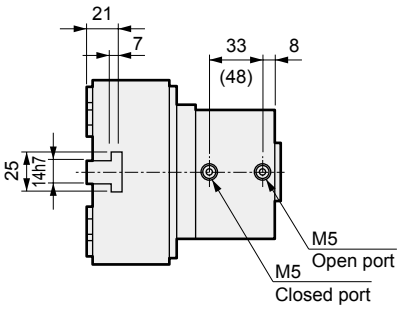

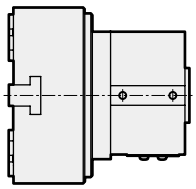

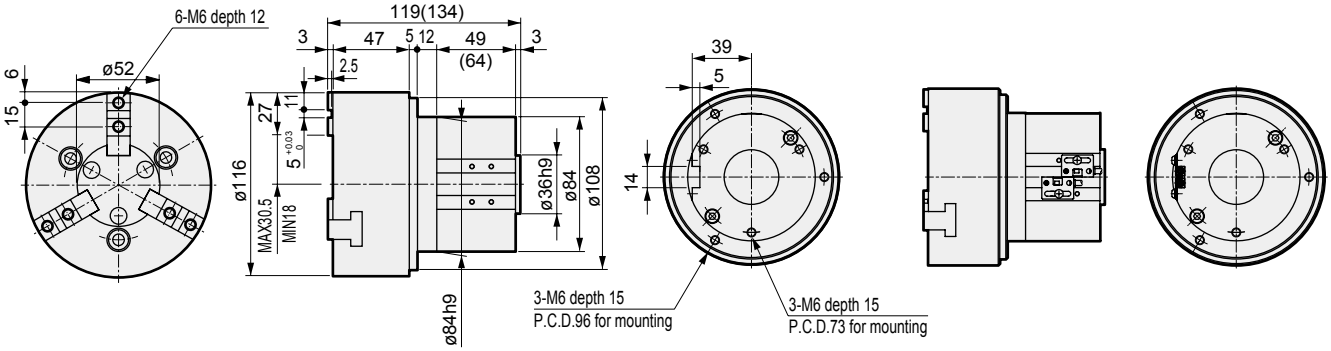

Dimensions

● CKA-60CS standard/O/C

● Dimensions in ( ) are for C [normally closed] specifications.

● With switch

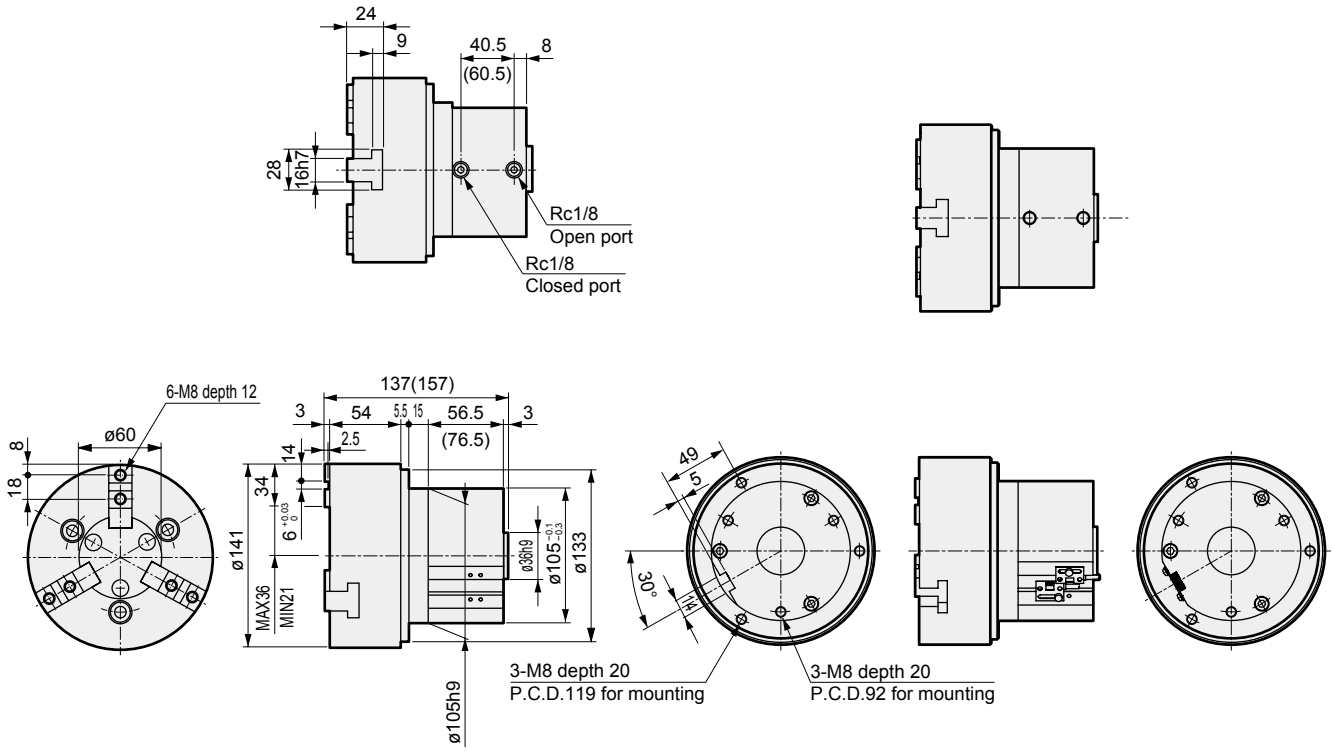

● CKA-70CS standard/O/C

● Dimensions in ( ) are for C [normally closed] specifications.

● With switch

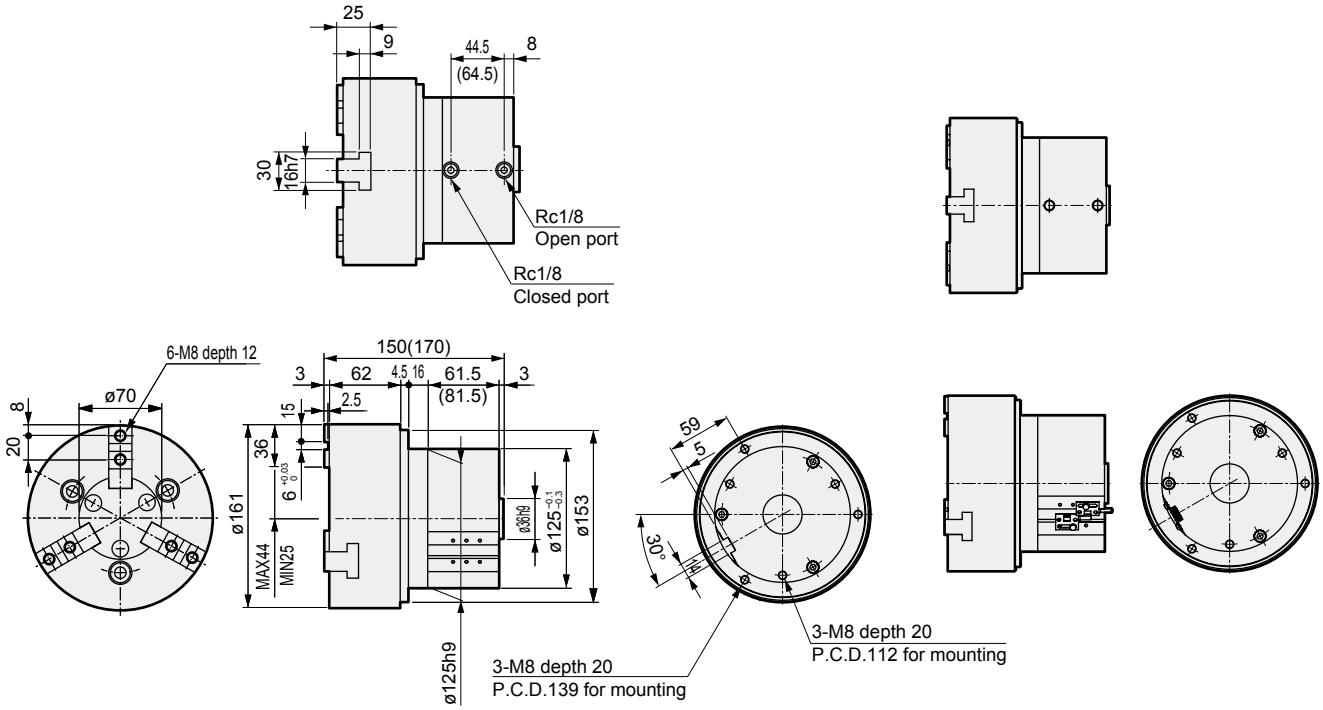

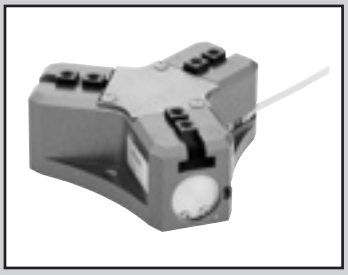

Thin chuck

CKS Series

● Operating stroke: 10, 12, 16, 20, 28, 32mm

Double acting

RoHS CAD

Specifications

Item		CKS					
Size		08CS	12CS	16CS	20CS	25CS	32CS
Actuation		Double acting					
Working fluid		Compressed air					
Max. working pressure MPa		0.7 (≈100 psi, 7 bar)					
Min. working pressure MPa		0.2 (≈29 psi, 2 bar)					
Ambient temperature °C		5 (41°F) to 60 (140°F)					
Port size		M5					
Operating stroke mm		10	12	16	20	28	32
Bore size	Open direction	ø6×3	ø10×3	ø12×3	ø16×3	ø20×3	ø25×3
	Closed direction	ø8×3	ø12×3	ø16×3	ø20×3	ø25×3	ø32×3
Volumetric capacity (reciprocating) cm^3		1.2	3.5	7.6	15.5	33.8	62.2
Repeatability mm		±0.01					
Weight kg		0.16	0.26	0.40	0.63	1.14	1.8
Lubrication		Not required (use turbine oil class 1 ISO VG32 if necessary for lubrication)					

Switch specifications

Item	Proximity 2-wire	Proximity 3-wire
	T2H/V	T3H/V
Applications	Dedicated for programmable controller	For programmable controller, relay
Output method	-	NPN output
Power supply voltage	-	10 to 28 VDC
Load voltage/current	10 to 30 VDC, 5 to 20 mA (*1)	30 VDC or less, 100 mA or less
Indicator	LED (Lit when ON)	
Leakage current	1 mA or less	10 μA or less
Weight	1 m:18 g 3 m:49 g 5 m:80 g	

*1 : The above max. load current is 20 mA at 25°C.
The current is lower than 20 mA if the operating ambient temperature around the switch is higher than 25°C. (5 to 10 mA at 60°C)

*2 : Refer to Ending Page 1 for detailed switch specifications and dimensions.

How to order

Without switch (built-in magnet for switch)

CKS - 16CS - Y1

With switch (built-in magnet for switch)

CKS - 16CS - Y1 - T2H - R

Model No.

Ⓐ Size

Ⓑ Option *1

Ⓒ Switch model No.

Ⓓ Switch quantity

Code	Description
Ⓐ Size	
08CS	
12CS	
16CS	
20CS	
25CS	
32CS	
Ⓑ Option	
Blank	Standard (double acting)
W	With spring
Y1	With attachment Material: S50C
Y2	With attachment Material: MC nylon

Ⓒ Switch model No.

Straight lead wire	L-shaped lead wire	Contact	Voltage AC	Voltage DC	Indicator	Lead wire
T2H*	**T2V***	Proximity		●	1-color LED	2-wire
T3H*	**T3V***			●		3-wire

*** Lead wire length**	
Blank	1 m (standard)
3	3 m (option)
5	5 m (option)

Ⓓ Switch quantity	
R	1 on open side
H	1 on closed side
D	2

⚠ Precautions for model No. selection

*1 : Refer to pages 1868 and 1869 for the dimensions and compatible model of the attachment.
When ordered as an option, three are attached at shipment.

[Example of model No.]

CKS-16CS-Y1-T2H-R

Thin chuck

Ⓐ Size : 16CS
Ⓑ Option : With attachment Material S50C
Ⓒ Switch model No. : Proximity T2H switch, lead wire 1 m
Ⓓ Switch quantity : 1 on open side

How to order switch

SW - T2H*

Switch model No.
(Item Ⓒ above)

LCM
LCR
LCG
LCW
LCX
STM
STG
STS/STL
STR2
UCA2
ULK*
JSK/M2
JSG
JSC3/JSC4
USSD
UFCD
USC
UB
JSB3
LMB
LML
HCM
HCA
LBC
CAC4
UCAC2
CAC-N
UCAC-N
RCS2
RCC2
PCC
SHC
MCP
GLC
MFC
BBS
RRC
GRC
RV3*
NHS
HRL
LN
Hand
Chuk
MecHnd/Chuk
ShkAbs
FJ
FK
SpdContr
Ending
CKL2
CKLG2
CKL2-HC
CKH2
CKLB2
CKG
CK
CKA
CKS
CKS-F
CKF
CKJ
CHC

Internal structure and parts list

● CKS standard

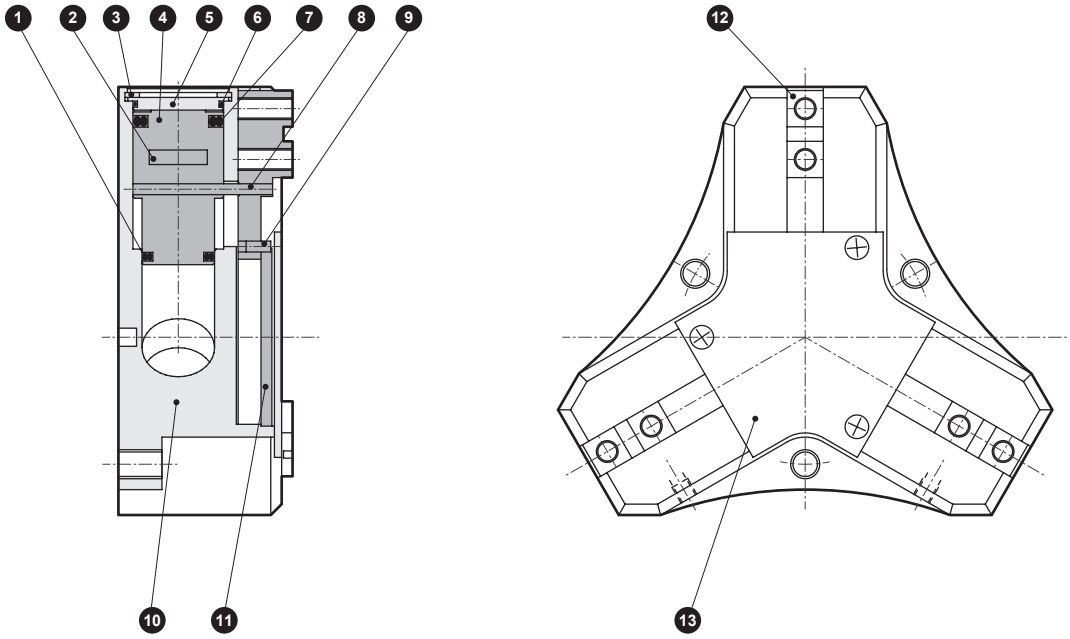

● W (with spring)

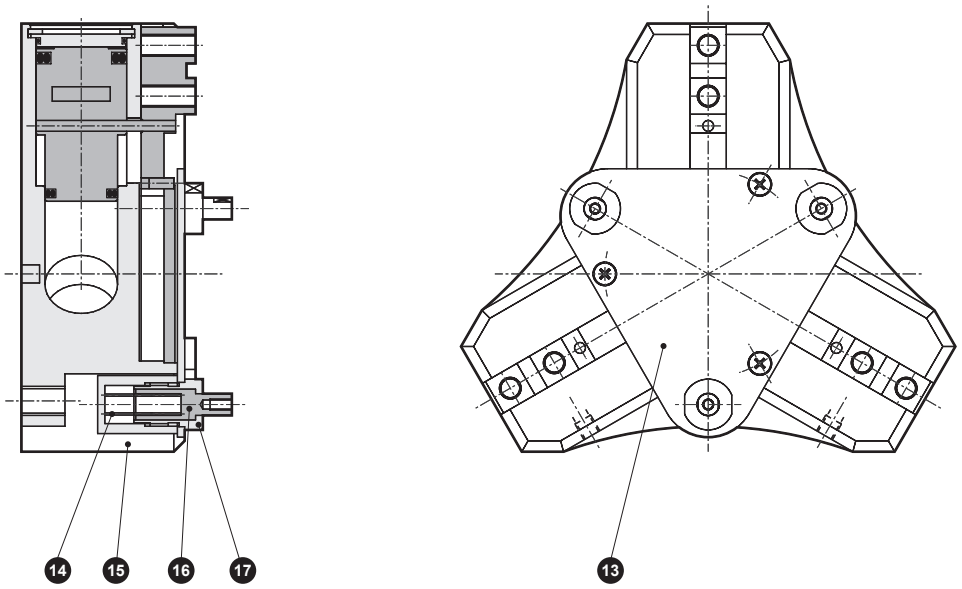

Cannot be disassembled

No.	Part name	Material	Remarks	No.	Part name	Material	Remarks
1	Piston seal B	Nitrile rubber		10	Body	Aluminum alloy	
2	Magnet			11	Link	Steel	
3	C-snap ring	Stainless steel		12	Finger	Steel	
4	Piston	Aluminum alloy		13	Center guard	Stainless steel	
5	Cylinder guard	Aluminum alloy		14	Spring	Steel	
6	Cylinder sealant	Nitrile rubber		15	Case	Stainless steel	
7	Piston seal A	Nitrile rubber		16	Pin	Stainless steel	
8	Operation shaft A	Alloy steel		17	Nut	Stainless steel	
9	Operation shaft B	Alloy steel					

Gripping force performance data

- Gripping force represents the thrust (per finger) in the arrow direction shown in the figure.
- The gripping force in the opening/closing directions with finger length L of hand with a supply pressure of 0.3, 0.5 and 0.7 MPa is shown.

● Open direction (⇦) - - - - - - - - - - - - (shown with broken line)
● Closed direction (➡) ———————— (shown with continuous line)

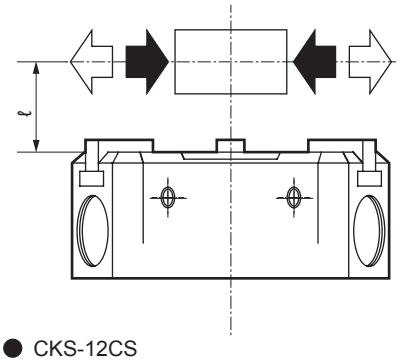

● CKS-08CS

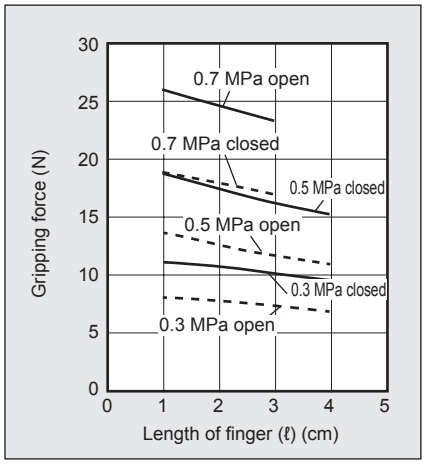

● CKS-12CS

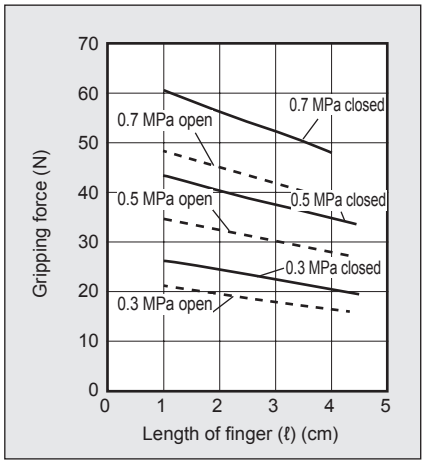

● CKS-16CS

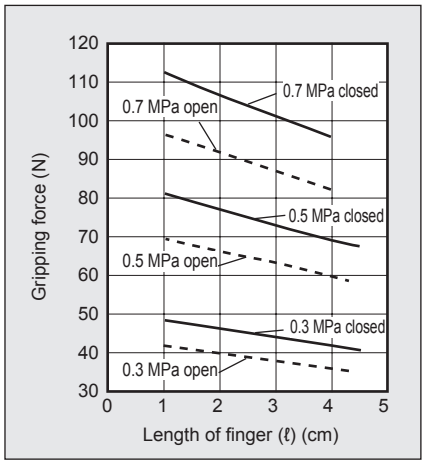

● CKS-20CS

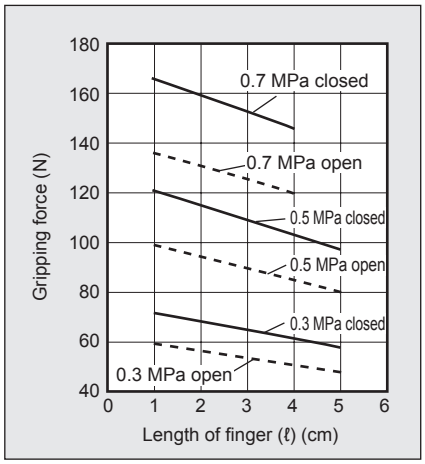

● CKS-25CS

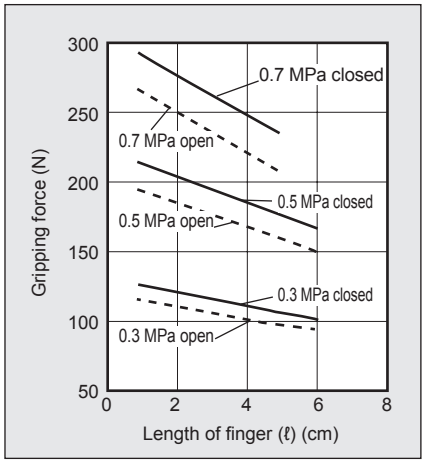

● CKS-32CS

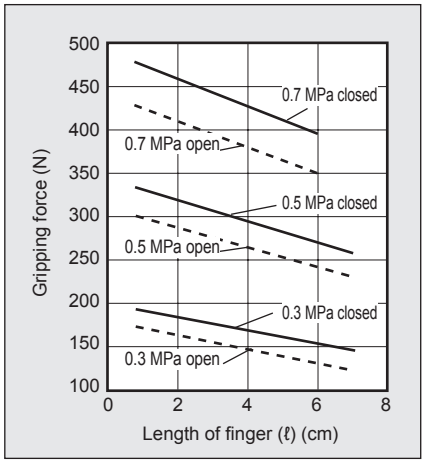

(Note) When making a selection, read the precautions for design and selection on page 1872.

LCM
LCR
LCG
LCW
LCX
STM
STG
STS/STL
STR2
UCA2
ULK*
JSK/M2
JSG
JSC3/JSC4
USSD
UFCD
USC
UB
JSB3
LMB
LML
HCM
HCA
LBC
CAC4
UCAC2
CAC-N
UCAC-N
RCS2
RCC2
PCC
SHC
MCP
GLC
MFC
BBS
RRC
GRC
RV3*
NHS
HRL
LN
Hand
Chuk
MecHnd/Chuk
ShkAbs
FJ
FK
SpdContr
Ending
CKL2
CKLG2
CKL2-HC
CKH2
CKLB2
CKG
CK
CKA
CKS
CKS-F
CKF
CKJ
CHC

Dimensions

● CKS-08CS standard

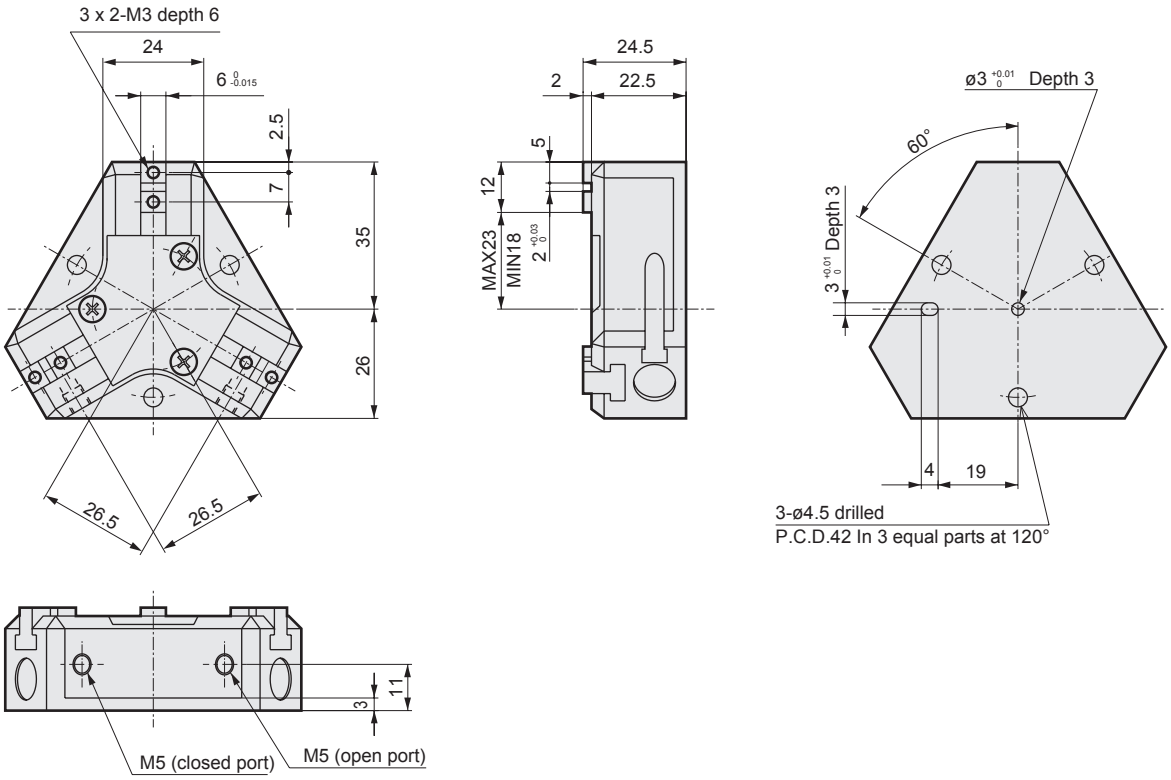

● CKS-08CS-W (with spring) (spring force (3 pcs.) 2.1 to 4.8N)

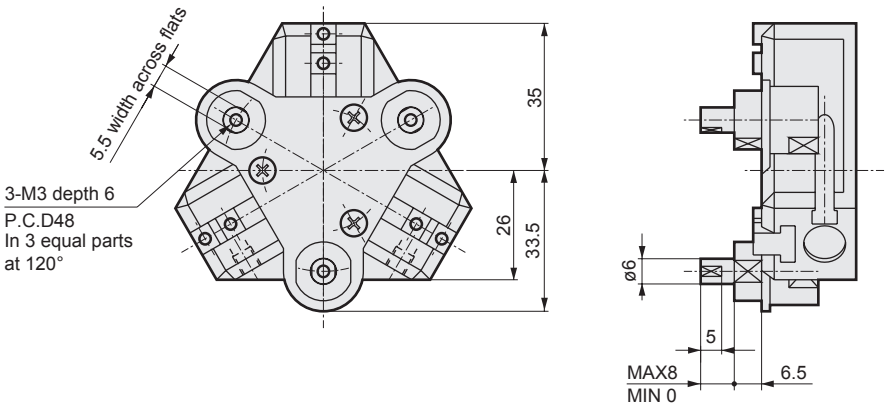

● With switch

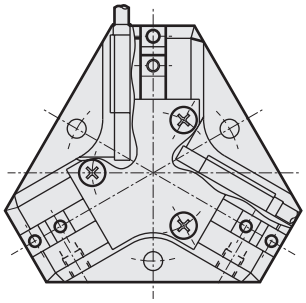

Dimensions

● CKS-12CS standard

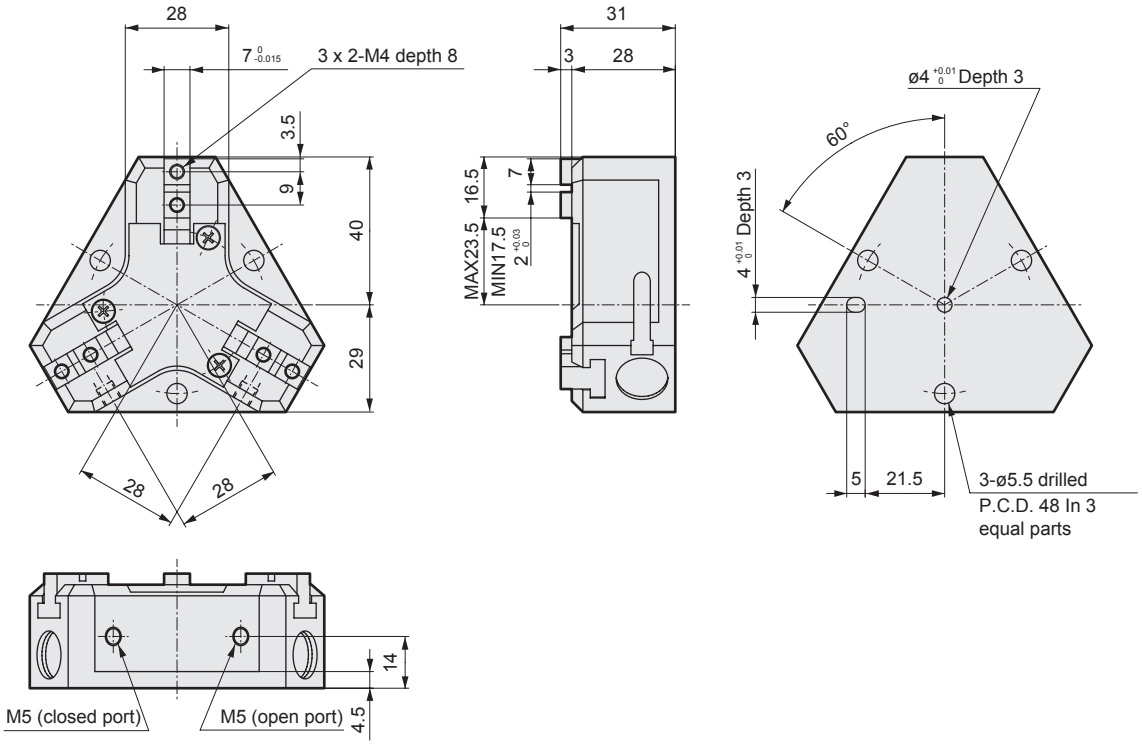

● CKS-12CS-W (with spring) (spring force (3 pcs.) 4.5 to 11.4N)

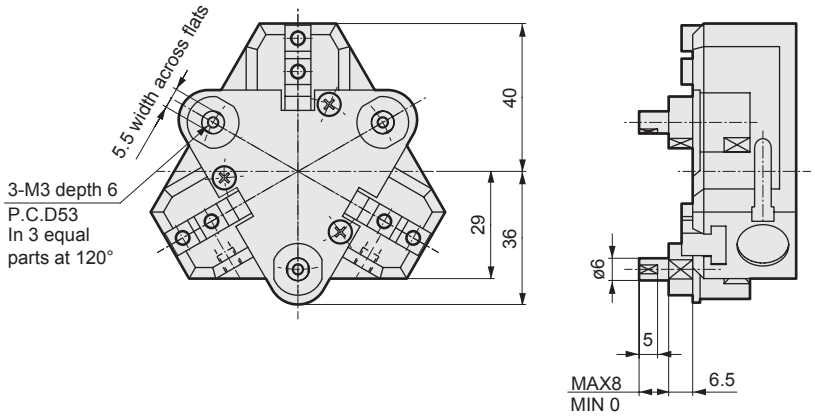

● With switch

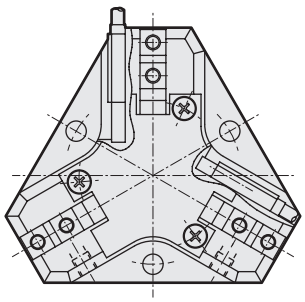

LCM
LCR
LCG
LCW
LCX
STM
STG
STS/STL
STR2
UCA2
ULK*
JSK/M2
JSG
JSC3/JSC4
USSD
UFCD
USC
UB
JSB3
LMB
LML
HCM
HCA
LBC
CAC4
UCAC2
CAC-N
UCAC-N
RCS2
RCC2
PCC
SHC
MCP
GLC
MFC
BBS
RRC
GRC
RV3*
NHS
HRL
LN
Hand
Chuk
MecHnd/Chuk
ShkAbs
FJ
FK
SpdContr
Ending
CKL2
CKLG2
CKL2-HC
CKH2
CKLB2
CKG
CK
CKA
CKS
CKS-F
CKF
CKJ
CHC

Dimensions

● CKS-16CS standard

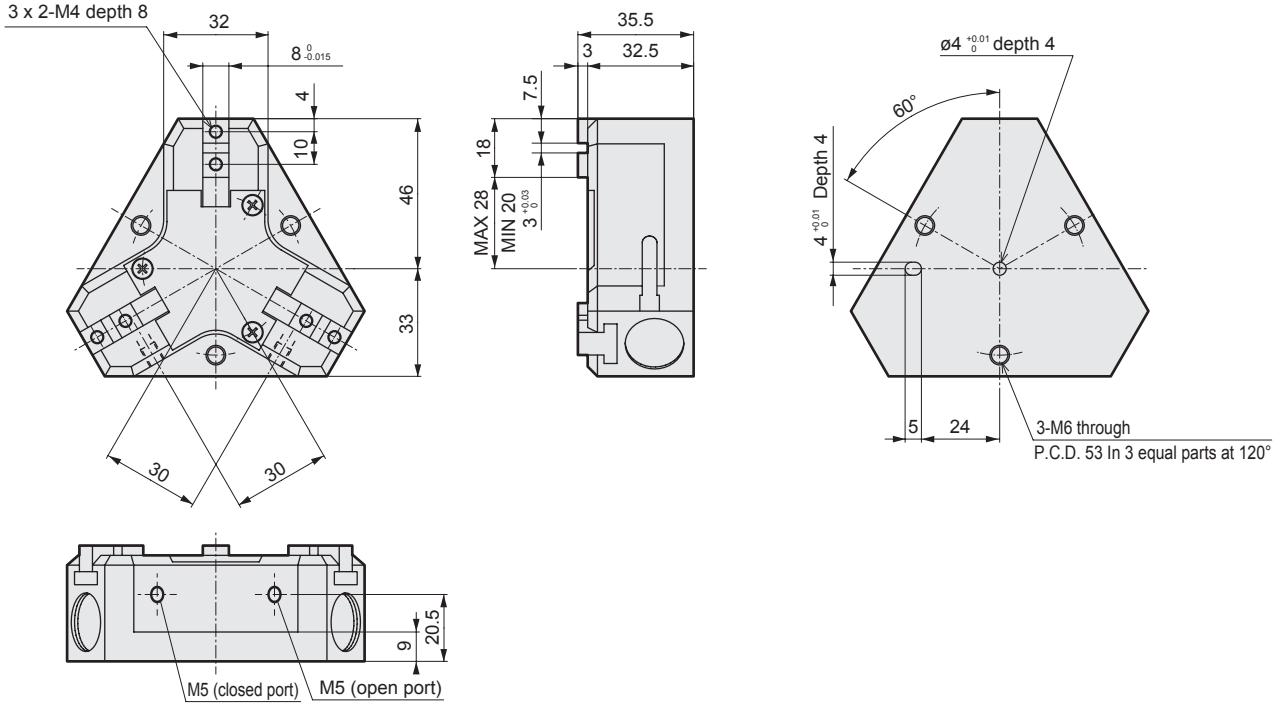

● CKS-16CS-W (with spring) (spring force (3 pcs.) 7.2 to 19N)

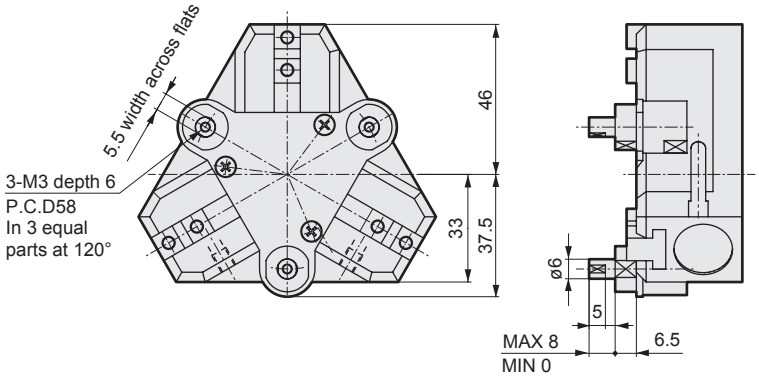

● With switch

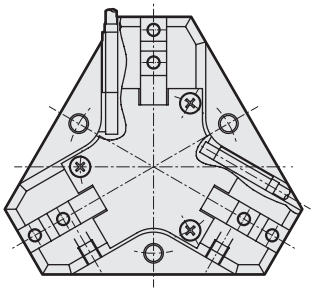

Dimensions

● CKS-20CS Standard

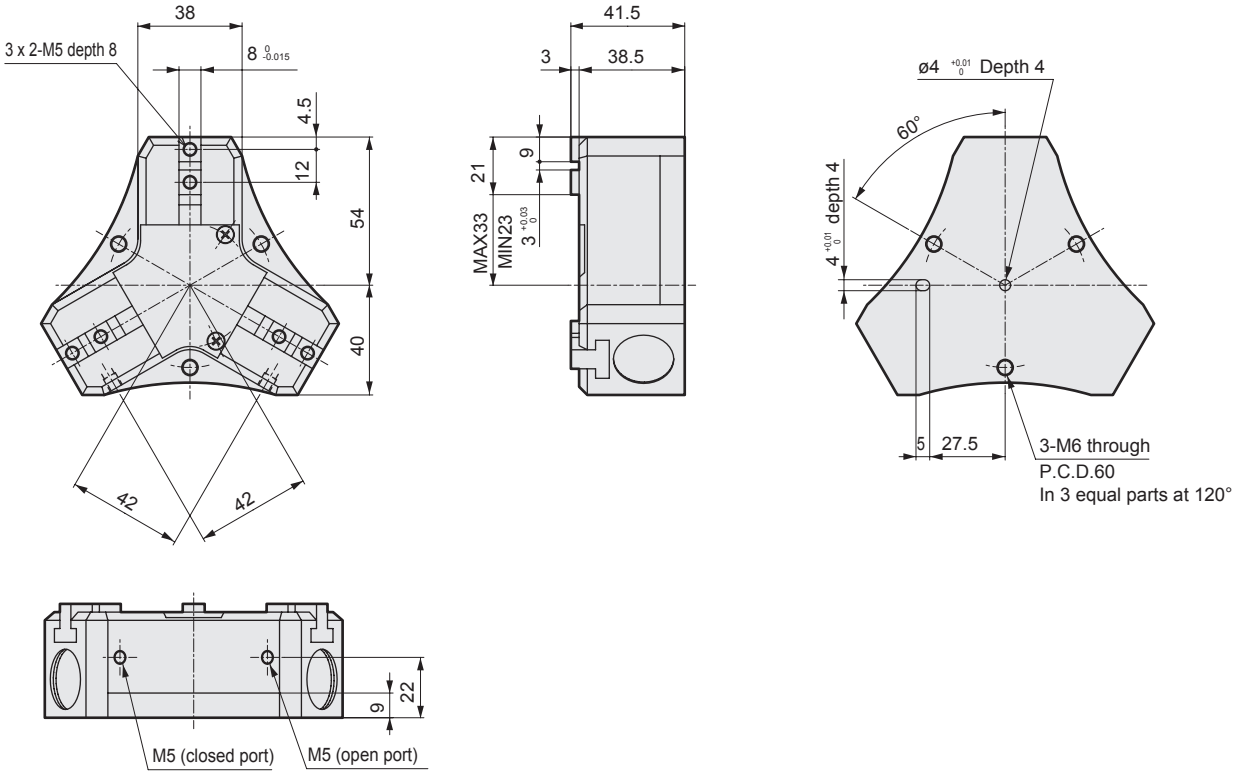

● CKS-20CS-W (with spring) (spring force (3 pcs.) 7.5 to 28N)

● With switch

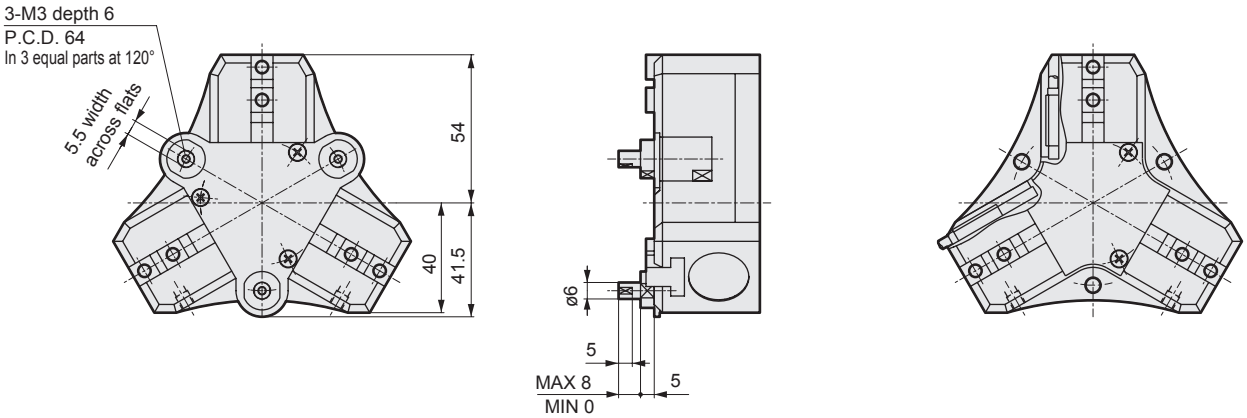

LCM
LCR
LCG
LCW
LCX
STM
STG
STS/STL
STR2
UCA2
ULK*
JSK/M2
JSG
JSC3/JSC4
USSD
UFCD
USC
UB
JSB3
LMB
LML
HCM
HCA
LBC
CAC4
UCAC2
CAC-N
UCAC-N
RCS2
RCC2
PCC
SHC
MCP
GLC
MFC
BBS
RRC
GRC
RV3*
NHS
HRL
LN
Hand
Chuk
MecHnd/Chuk
ShkAbs
FJ
FK
SpdContr
Ending
CKL2
CKLG2
CKL2-HC
CKH2
CKLB2
CKG
CK
CKA
CKS
CKS-F
CKF
CKJ
CHC

Dimensions

● CKS-25CS standard

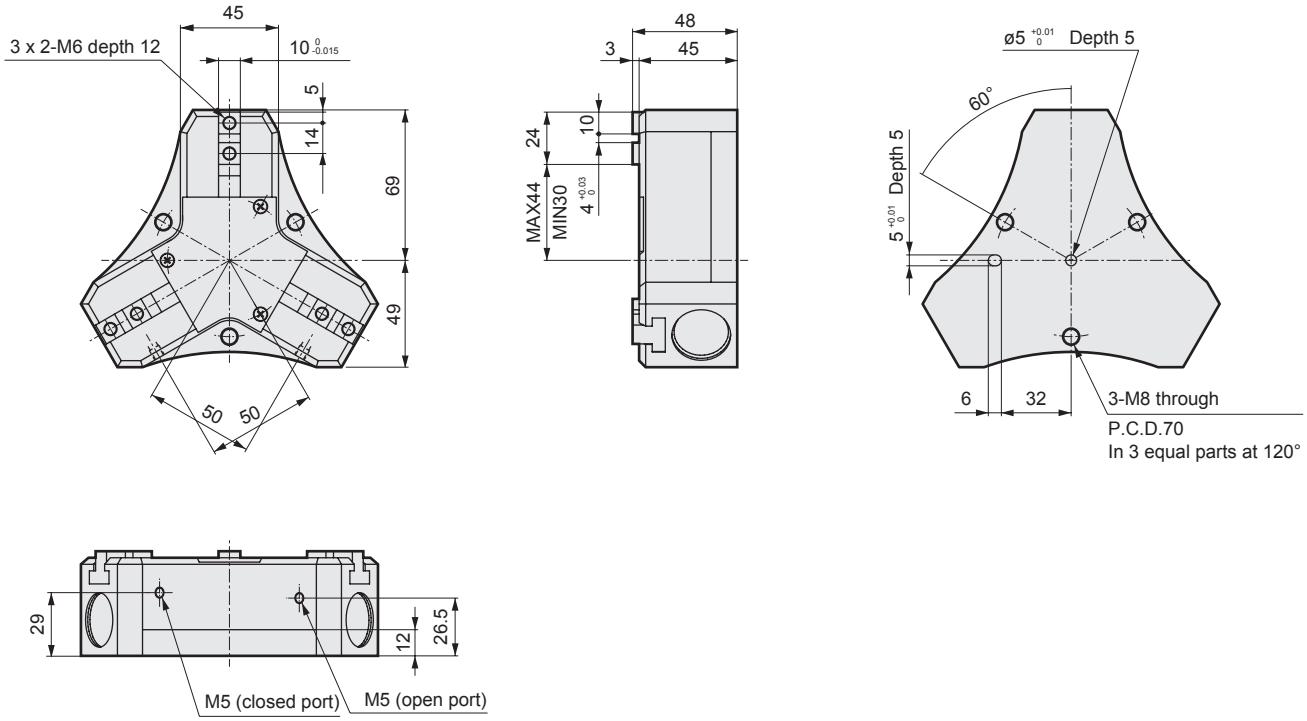

● CKS-25CS-W (with spring) (spring force (3 pcs.) 15 to 39 N)

● With switch

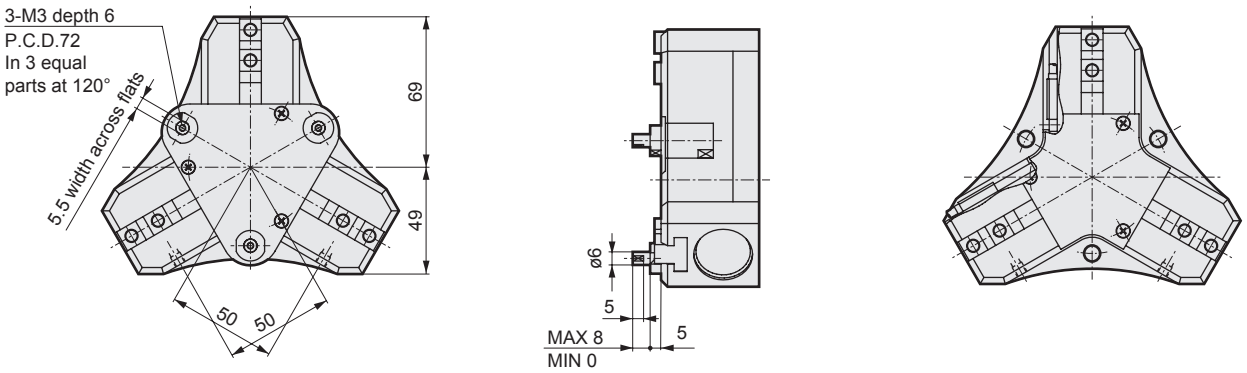

Dimensions

● CKS-32CS Standard

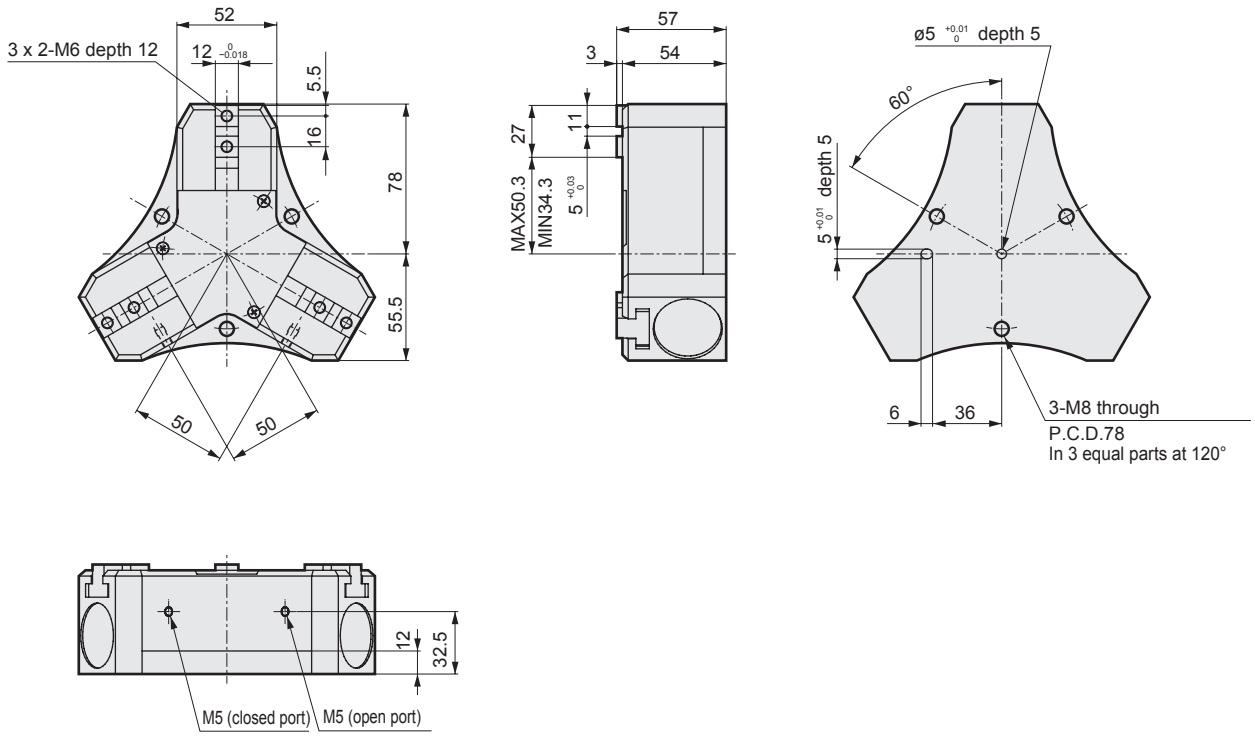

● CKS-32CS-W (with spring) (spring force (3 pcs.) 26 to 67 N)

● With switch

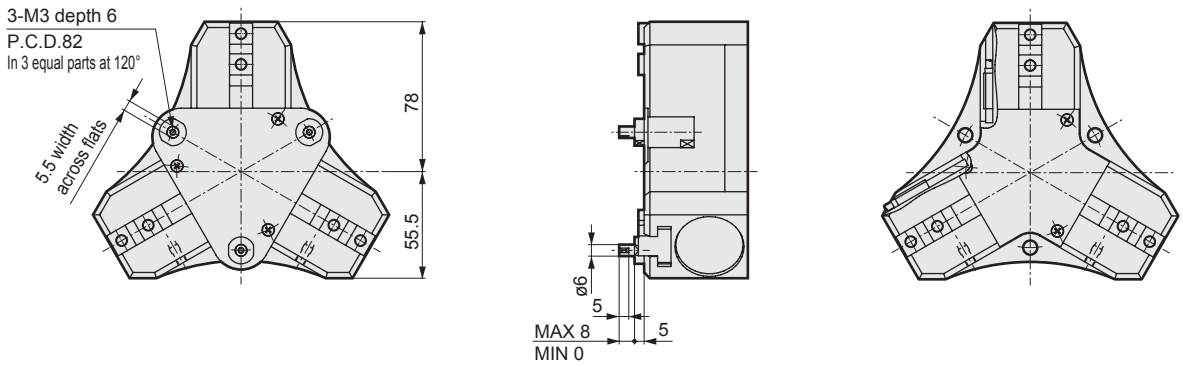

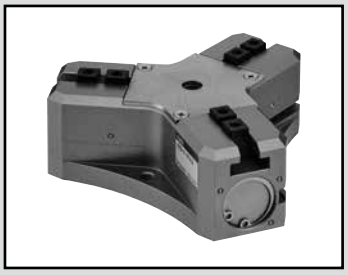

Thin chuck (hollow)

CKS-F Series

● Operating stroke length: 16, 20, 28, 32, 50 mm

Double acting

Specifications

1 MPa ≈ 145.0 psi, 1 MPa = 10 bar

Item		CKS-F				
Size		16CS	20CS	25CS	32CS	50CS
Actuation		Double acting				
Working fluid		Compressed air				
Max. working pressure MPa		0.7 (≈101 psi, 7 bar)				
Min. working pressure MPa		0.2 (≈29 psi, 2 bar)				
Ambient temperature °C		5 (41°F) to 60 (140°F)				
Port size		M5				
Operating stroke length mm		16	20	28	32	50
Bore size	Open direction	ø12 x 3	ø16 x 3	ø20 x 3	ø25 x 3	ø40 x 3
	Closed direction	ø16 x 3	ø20 x 3	ø25 x 3	ø32 x 3	ø50 x 3
Volumetric capacity (reciprocating) cm^3		7.6	15.5	33.8	62.2	242
Repeatability mm		±0.01				
Weight kg		0.40	0.63	1.14	1.8	5.76
Lubrication		Not required (use turbine oil class 1 ISO VG32 if necessary for lubrication)				

Switch specifications

Item	Proximity 2-wire	Proximity 3-wire
	T2H/V	T3H/V
Applications	Dedicated for programmable controller	For programmable controller, relay
Output method	–	NPN output
Power supply voltage	–	10 to 28 VDC
Load voltage/current	10 to 30 VDC, 5 to 20 mA (*1)	30 VDC or less, 100 mA or less
Display lamp	LED (Lit when ON)	
Leakage current	1 mA or less	10 μA or less
Weight	1 m: 18 g 3 m: 49 g 5 m: 80 g	

*1 : The above max. load current is 20 mA at 25°C. The current is lower than 20 mA if the operating ambient temperature around the switch is higher than 25°C. (5 to 10 mA at 60°C)

*2 : Refer to Ending Page 1 for detailed switch specifications and dimensions.

How to order

Without switch (built-in magnet for switch)

CKS-F - 16CS - Y1

With switch (built-in magnet for switch)

CKS-F - 16CS - Y1 - T2H - R

Model No.

Ⓐ Size

Ⓑ Option *1, *2

Ⓒ Switch model No.

Ⓓ Switch quantity

Code	Description
Ⓐ Size	
16CS	
20CS	
25CS	
32CS	
50CS	
Ⓑ Option	
Blank	Standard (double acting)
Y1	With attachment Material: S50C
Y2	With attachment Material: MC nylon

Ⓒ Switch model No.

Lead wire Straight	Lead wire Radial	Contact	Voltage AC	Voltage DC	Display	Lead wire
T2H*	**T2V***	Proximity		●	1-color display	2-wire
T3H*	**T3V***			●		3-wire

*** Lead wire length**	
Blank	1 m (standard)
3	3 m (option)
5	5 m (option)

Ⓓ Switch quantity	
R	1 on open side
H	1 on closed side
D	2

⚠ Precautions for model No. selection

*1: Refer to pages 1868 and 1869 for the dimensions and compatible models of the attachment.
When ordered as an option, three are included at shipment.
*2: Attachment cannot be selected for CKS-F-50CS.

[Example of model No.]

CKS-F-16CS-Y1-T2H-R

Thin chuck

Ⓐ Size : 16CS
Ⓑ Option : With attachment, material S50C
Ⓒ Switch model No. : Proximity T2H switch, lead wire 1 m
Ⓓ Switch quantity : One on open side

How to order switch

SW - T2H*

Switch model No.
(Item Ⓒ above)

Internal structure and parts list

● CKS-F-16CS to 50CS

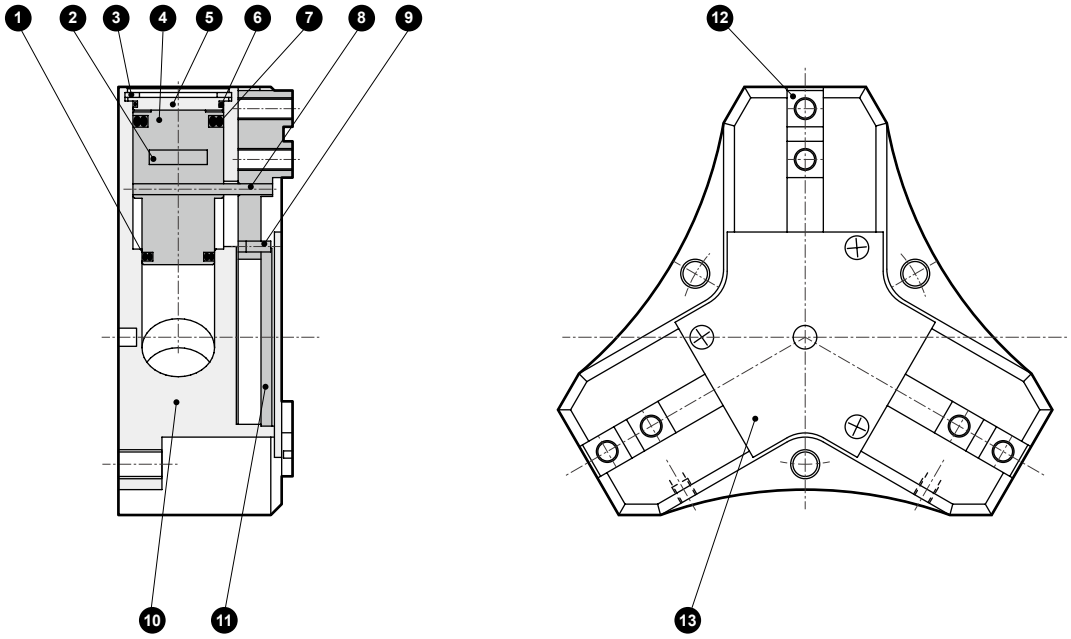

Cannot be disassembled

No.	Part name	Material	Remarks	No.	Part name	Material	Remarks
1	Piston seal B	Nitrile rubber		8	Operation shaft A	Steel alloy	
2	Magnet			9	Operation shaft B	Steel alloy	
3	C type snap ring	Stainless steel		10	Body	Aluminum alloy	
4	Piston	Aluminum alloy		11	Link	Steel	
5	Cylinder guard	Aluminum alloy		12	Finger	Steel	
6	Cylinder sealant	Nitrile rubber		13	Center guard	Stainless steel	
7	Piston seal A	Nitrile rubber					

Gripping power performance data

- Gripping power represents the thrust (per one finger) in the arrow direction shown in the figure.
- The gripping power in the opening/closing directions with one finger length ℓ of the hand with a supply pressure of 0.3, 0.5 and 0.7 MPa is shown.
  - Open direction (⇦) - - - - - - - - - - - - (shown with broken line)
  - Closed direction (➡) ———————— (shown with continuous line)

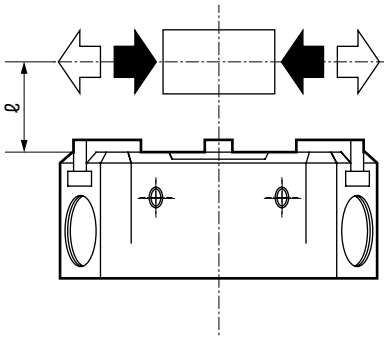

● CKS-F-16CS

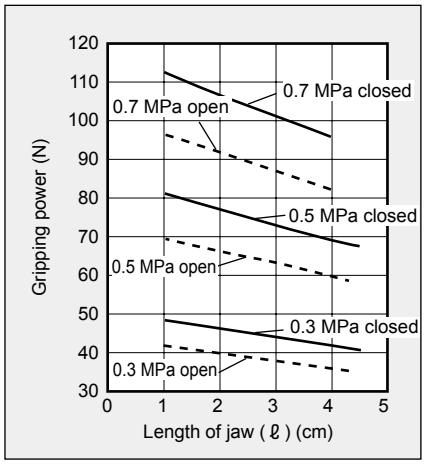

● CKS-F-20CS

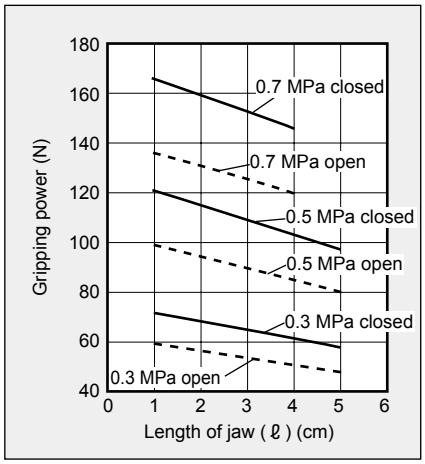

● CKS-F-25CS

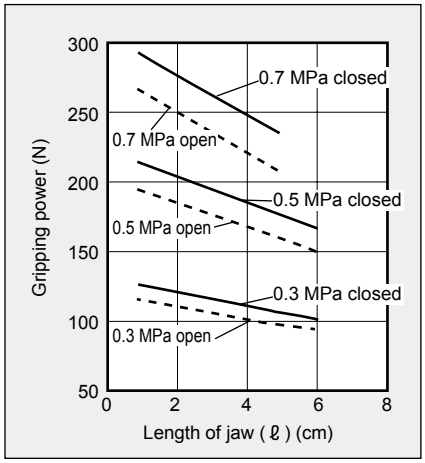

● CKS-F-32CS

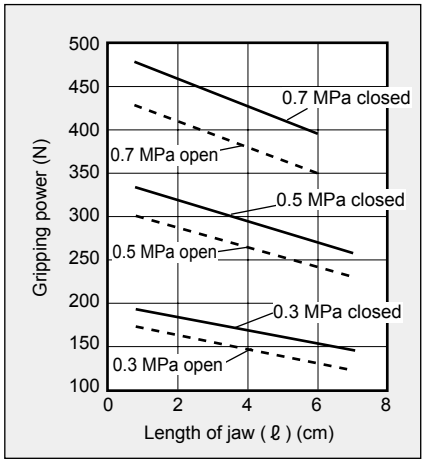

● CKS-F-50CS

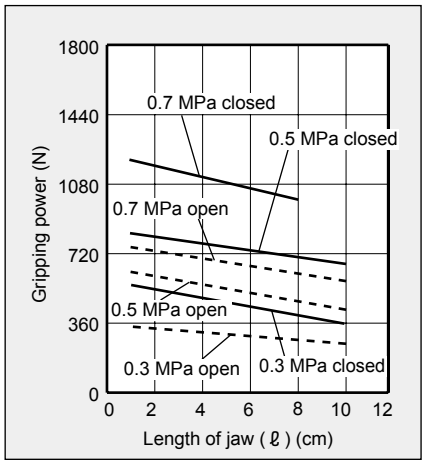

(Note) For selection, see page 1872 for design and selection precautions.

LCM
LCR
LCG
LCW
LCX
STM
STG
STS/STL
STR2
UCA2
ULK*
JSK/M2
JSG
JSC3/JSC4
USSD
UFCD
USC
UB
JSB3
LMB
LML
HCM
HCA
LBC
CAC4
UCAC2
CAC-N
UCAC-N
RCS2
RCC2
PCC
SHC
MCP
GLC
MFC
BBS
RRC
GRC
RV3*
NHS
HRL
LN
Hand
Chuk
MecHnd/Chuk
ShkAbs
FJ
FK
SpdContr
Ending
CKL2
CKLG2
CKL2-HC
CKH2
CKLB2
CKG
CK
CKA
CKS
CKS-F
CKF
CKJ
CHC

Dimensions CAD

● CKS-F-16CS

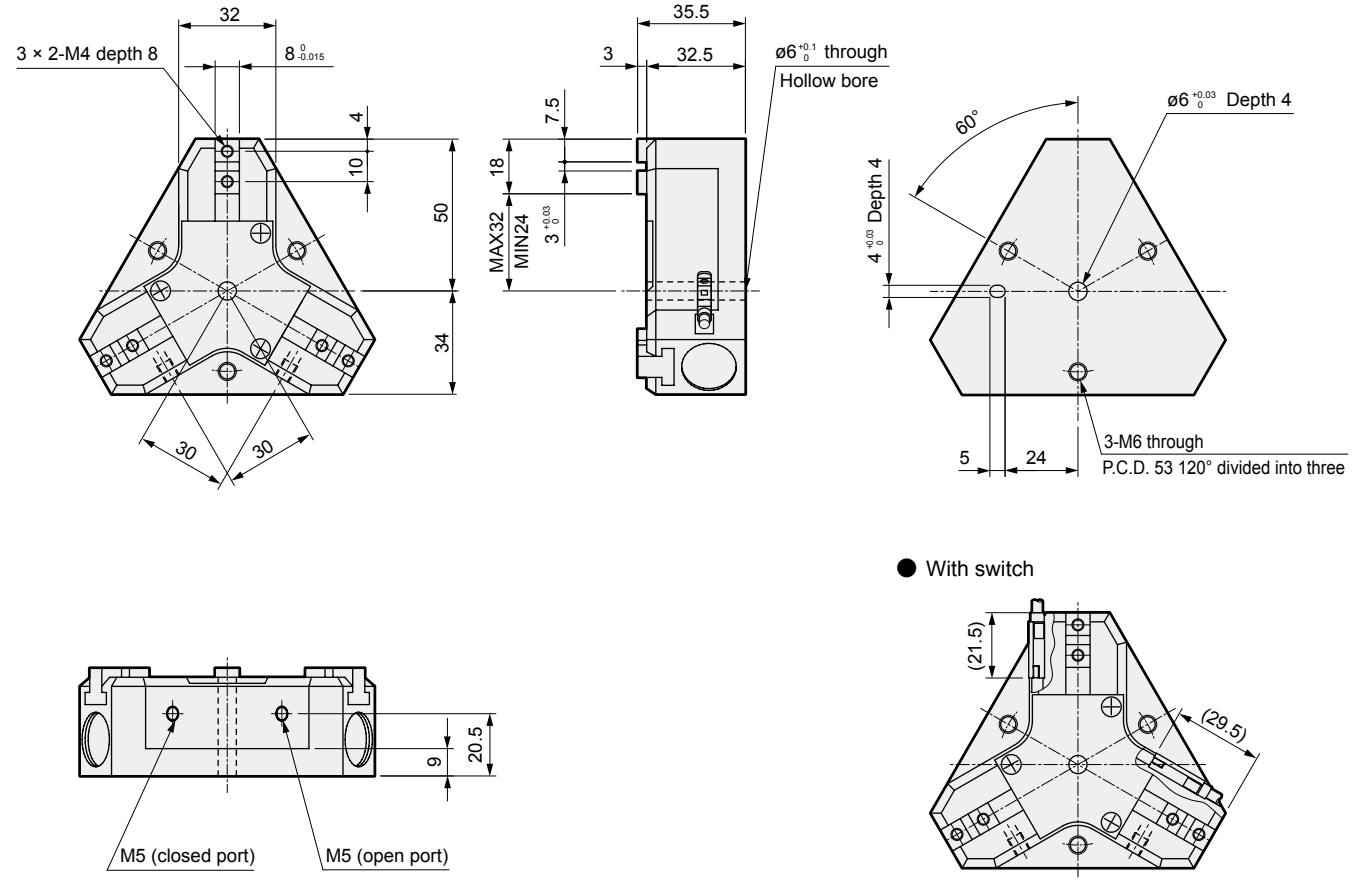

● CKS-F-20CS

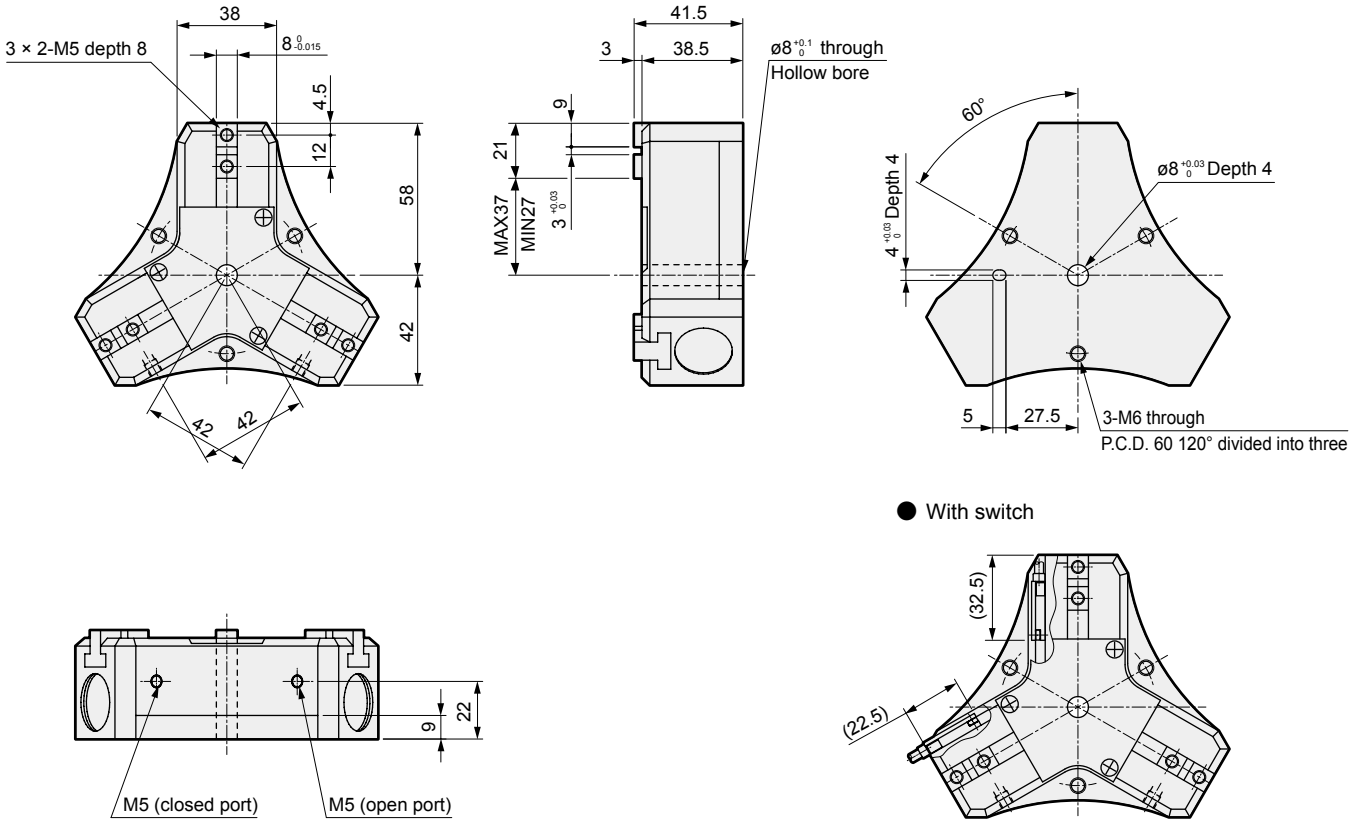

Dimensions

● CKS-F-25CS

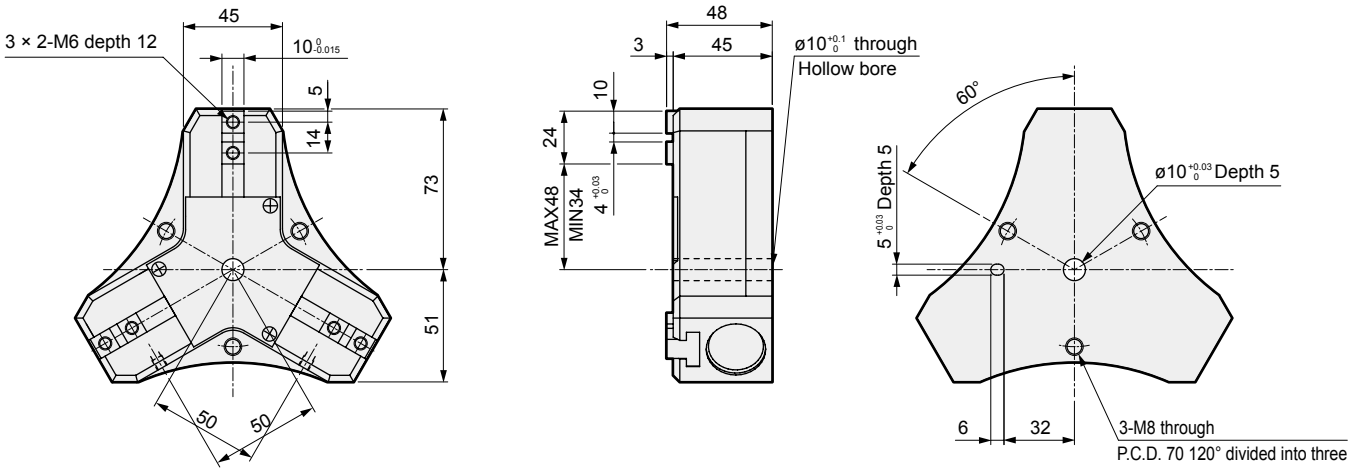

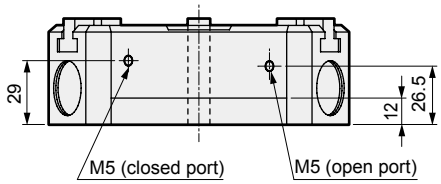

● With switch

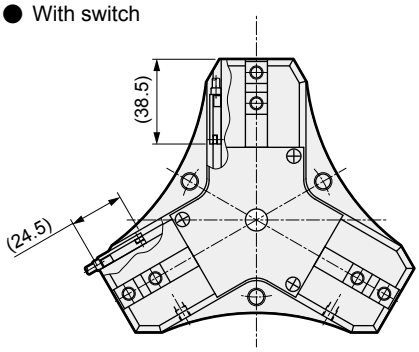

● CKS-F-32CS

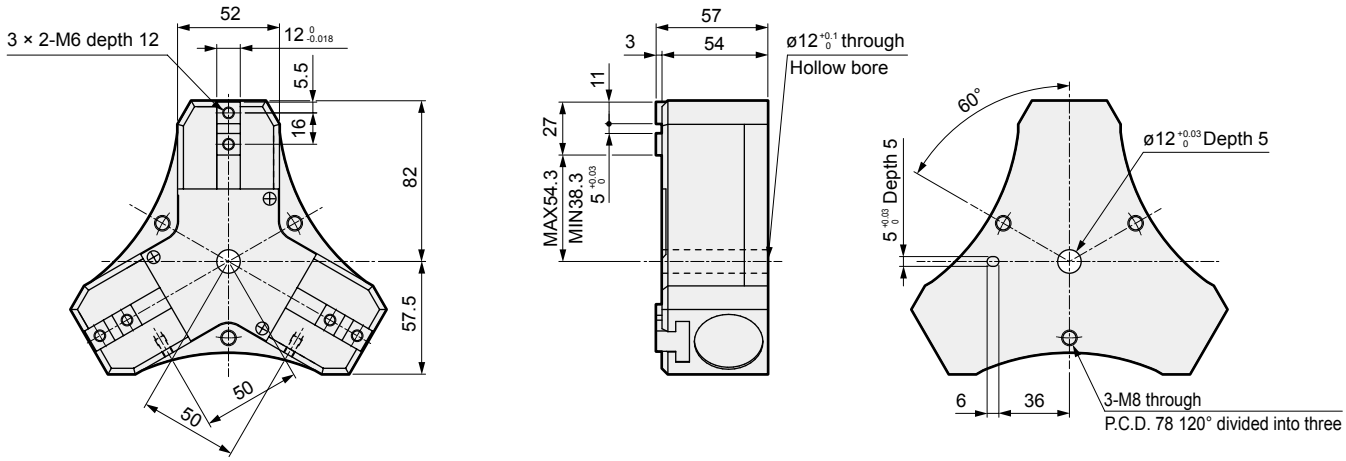

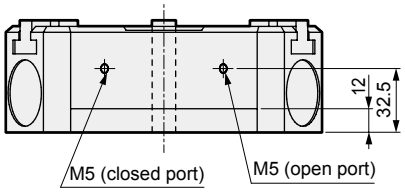

● With switch

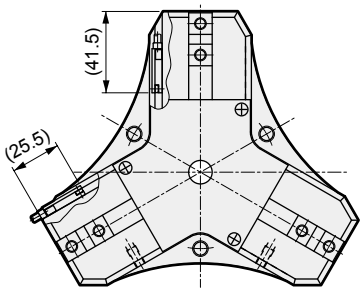

LCM
LCR
LCG
LCW
LCX
STM
STG
STS/STL
STR2
UCA2
ULK*
JSK/M2
JSG
JSC3/JSC4
USSD
UFCD
USC
UB
JSB3
LMB
LML
HCM
HCA
LBC
CAC4
UCAC2
CAC-N
UCAC-N
RCS2
RCC2
PCC
SHC
MCP
GLC
MFC
BBS
RRC
GRC
RV3*
NHS
HRL
LN
Hand
Chuk
MecHnd/Chuk
ShkAbs
FJ
FK
SpdContr
Ending
CKL2
CKLG2
CKL2-HC
CKH2
CKLB2
CKG
CK
CKA
CKS
CKS-F
CKF
CKJ
CHC

Dimensions

● CKS-F-50CS

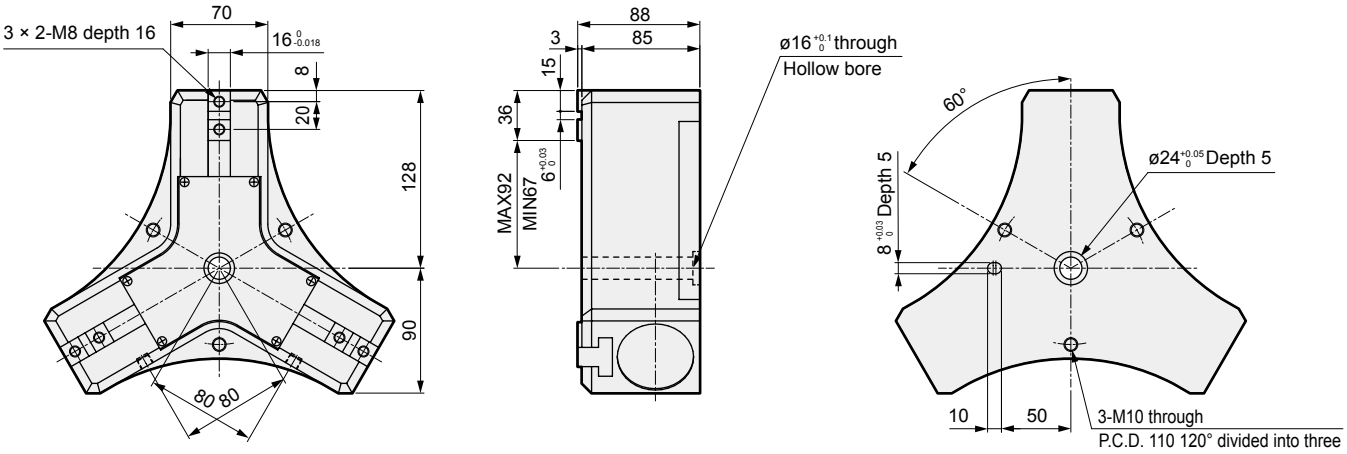

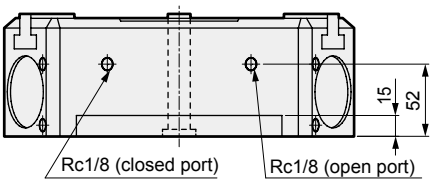

● With switch

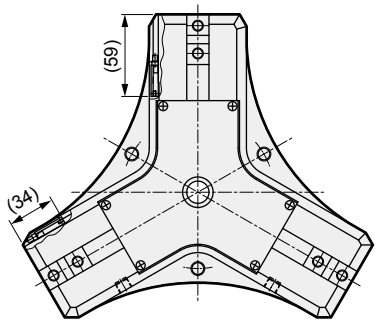

MEMO

Hollow chuck Double acting/single acting

CKF Series

● Operating stroke length: 5, 7, 8, 16 mm

Double acting

Single acting (normally open)

Single acting (normally closed)

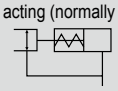

RoHS CAD

Specifications

Item		CKF				
Size		15CS	20CS	25CS	30CS	40CS
Bore size	mm	ø30	ø40		ø50	ø80
Actuation		Double acting/single acting				
Working fluid		Compressed air				
Max. working pressure	MPa	0.7 (≈100 psi, 7 bar)				
Min. working pressure	MPa	0.3 (≈44 psi, 3 bar)				
Ambient temperature	°C	5 (41°F) to 60 (140°F)				
Port size		M5				
Operating stroke length	mm	5		7	8	16
Rod diameter	mm	ø16	ø24		ø28	ø34
Volumetric capacity (reciprocating)	cm^3	2.5	5.2	7.3	13.3	73.2
Hollow diameter	mm	ø5.5	ø8.4	ø10.4	ø12	ø16
Repeatability	mm	±0.03				
Weight	kg	0.29	0.43	0.63	1.2	2.3
Lubrication		Not required (use turbine oil class 1 ISO VG32 if necessary for lubrication)				

Switch specifications

Item	Proximity 2-wire	Proximity 3-wire
	T2H/V	T3H/V
Applications	Dedicated for programmable controller	For programmable controller, relay
Output method	-	NPN output
Power supply voltage	-	10 to 28 VDC
Load voltage/current	10 to 30 VDC, 5 to 20 mA (*1)	30 VDC or less, 100 mA or less
Indicator lamp	LED (Lit when ON)	
Leakage current	1 mA or less	10 μA or less
Weight	1 m:18 g 3 m:49 g 5 m:80 g (*2)	

*1 : The above max. load current is 20 mA at 25°C. The current is lower than 20 mA if the operating ambient temperature around the switch is higher than 25°C. (5 to 10 mA at 60°C)
*2 : The weight of switch mounting bracket is 1.5 g.
*3 : Refer to Ending Page 1 for detailed switch specifications and dimensions.

How to order

Without switch (built-in magnet for switch)

CKF - 15CS - O

With switch (built-in magnet for switch)

CKF - 15CS - O - T2H - R

Ⓐ Size

Ⓑ Option *1, *2

Ⓒ Switch model No.

Ⓓ Switch quantity

Code	Description
Ⓐ Size	
15CS	
20CS	
25CS	
30CS	
40CS	

Ⓑ Option	
Blank	Standard (double acting)
O	Single acting (normally open)
C	Single acting (normally closed)
Y11	With attachment (Material S50C) Outer mount chuck (attachment No.: 510 to 540, 710)
Y12	With attachment (Material S50C) Inner mount chuck (attachment No.: 610 to 630)
Y21	With attachment (Material MC nylon) Outer mount chuck (attachment No.: 510 to 540, 710)
Y22	With attachment (Material MC nylon) Inner mount chuck (attachment No.: 610 to 630)

Ⓒ Switch model No.

Axial lead wire	Radial lead wire	Contact	Voltage AC	Voltage DC	Display	Lead wire
T2H*	T2V*	Proximity		●	1-color display	2-wire
T3H*	T3V*			●		3-wire

*** Lead wire length**	
Blank	1 m (standard)
3	3 m (option)
5	5 m (option)

Ⓓ Switch quantity	
R	1 on open side
H	1 on closed side
D	2

⚠ Precautions for model No. selection

*1 : Y11 and Y21 are available for CKF-15CS, while Y11, Y12, Y21 and Y22 are available for CKF-20 to 30CS, and Y11 and Y21 are available for CKF-40CS.

*2 : For the dimensions and compatible model of the attachment, refer to pages 1868 and 1869. When ordered as an option, three are attached at shipment.

[Example of model No.]

CKF-15CS-O-T2H-R

Model: Hollow chuck

Ⓐ Size : 15CS
Ⓑ Option : Single acting, normally open
Ⓒ Switch model No. : Proximity T2H switch, lead wire 1 m
Ⓓ Switch quantity : 1 on open side

How to order switch

SW - T2H

Switch model No. (Item Ⓒ above)

CKF-30CS, 40CS

● For switch T*H*

· Switch body + mounting bracket set

CKF - T2H

Switch model No. (Item Ⓒ above)

CKF-30CS, 40CS

·Mounting bracket set

CKF - T

● For switch T*V*

· Switch body + mounting bracket set

CKF - T2V - *

Switch model No. (Item Ⓒ above)

·Mounting bracket set

CKF - TV - *

(Select either R (open side) or H (closed side) for sections marked with an asterisk (*).)

Note) When the type with two switches is selected, if the model has a short operational stroke length, both switches may turn ON depending on the workpiece size.

LCM
LCR
LCG
LCW
LCX
STM
STG
STS/STL
STR2
UCA2
ULK*
JSK/M2
JSG
JSC3/JSC4
USSD
UFCD
USC
UB
JSB3
LMB
LML
HCM
HCA
LBC
CAC4
UCAC2
CAC-N
UCAC-N
RCS2
RCC2
PCC
SHC
MCP
GLC
MFC
BBS
RRC
GRC
RV3*
NHS
HRL
LN
Hand
Chuk
MecHnd/Chuk
ShkAbs
FJ
FK
SpdContr
Ending
CKL2
CKLG2
CKL2-HC
CKH2
CKLB2
CKG
CK
CKA
CKS
CKS-F
CKF
CKJ
CHC

Internal structure and parts list

● CKF-15CS to 25CS

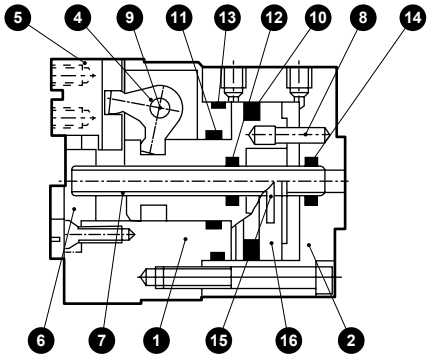

● CKF-30CS to 40CS

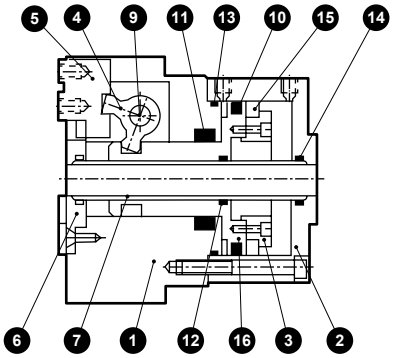

Cannot be disassembled

No.	Part name	Material	Remarks	No.	Part name	Material	Remarks
1	Body	Aluminum alloy		9	Fulcrum axis	Steel	
2	Cylinder	Aluminum alloy		10	Piston packing	Nitrile rubber	
3	Piston B	Stainless steel		11	Rod packing	Nitrile rubber	
4	Arm	Steel		12	Guide rod packing seal	Nitrile rubber	
5	Finger	Steel		13	Cylinder gasket	Nitrile rubber	
6	Center guard	Aluminum alloy		14	Pipe fixing gasket	Nitrile rubber	
7	Guide pipe	Stainless steel		15	Magnet		
8	Rotation-stop pin	Stainless steel		16	Piston A	Stainless steel	

Gripping power performance data

- Gripping power represents the thrust (per one finger) in the arrow direction shown in the figure.
- The gripping power in the opening/closing directions with jaw length L of hand with a supply pressure of 0.3, 0.5 and 0.7 MPa is shown.

● Open direction (⇦) ..... (shown with broken line)
● Closed direction (➡) ----- (shown with continuous line)

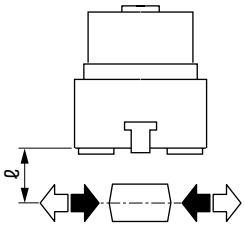

● CKF-15CS

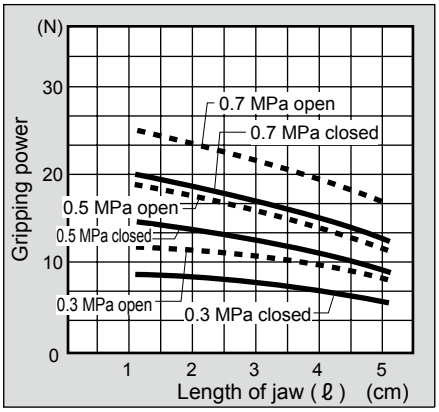

● CKF-20CS

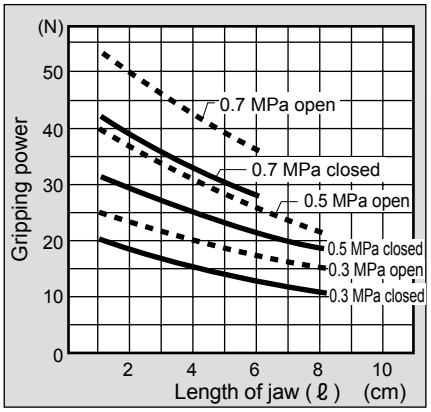

● CKF-25CS

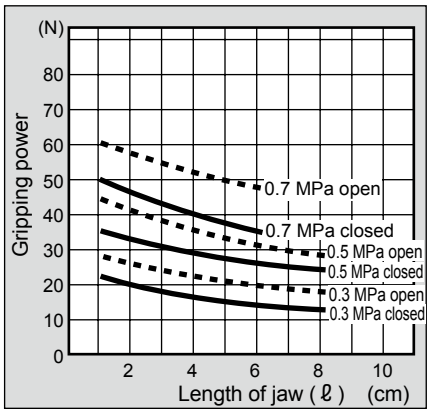

● CKF-30CS

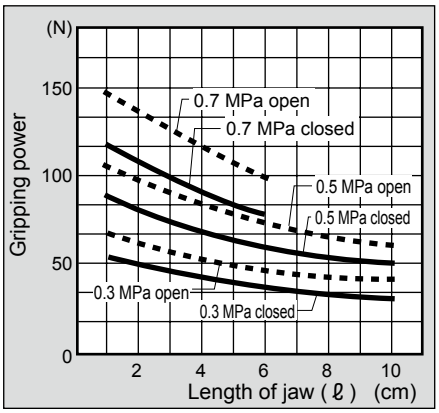

● CKF-40CS

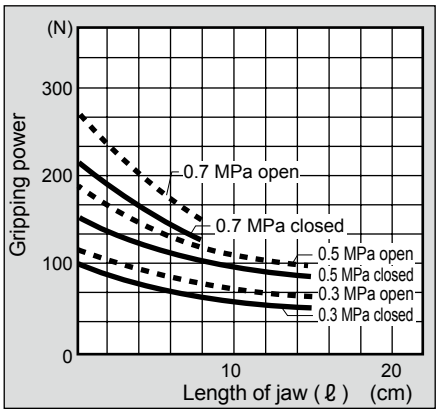

(Note) O type gripping power decreases approximately 20 to 30% in the closed direction compared to double acting.
C type gripping power decreases approximately 10 to 20% in the open direction compared to the double acting.
When making a selection, read the precautions for design and selection on page 1872.

Dimensions

● CKF-15CS standard/O/C

· Dimensions in ( ) are for O [normally open] and C [normally closed] specifications.

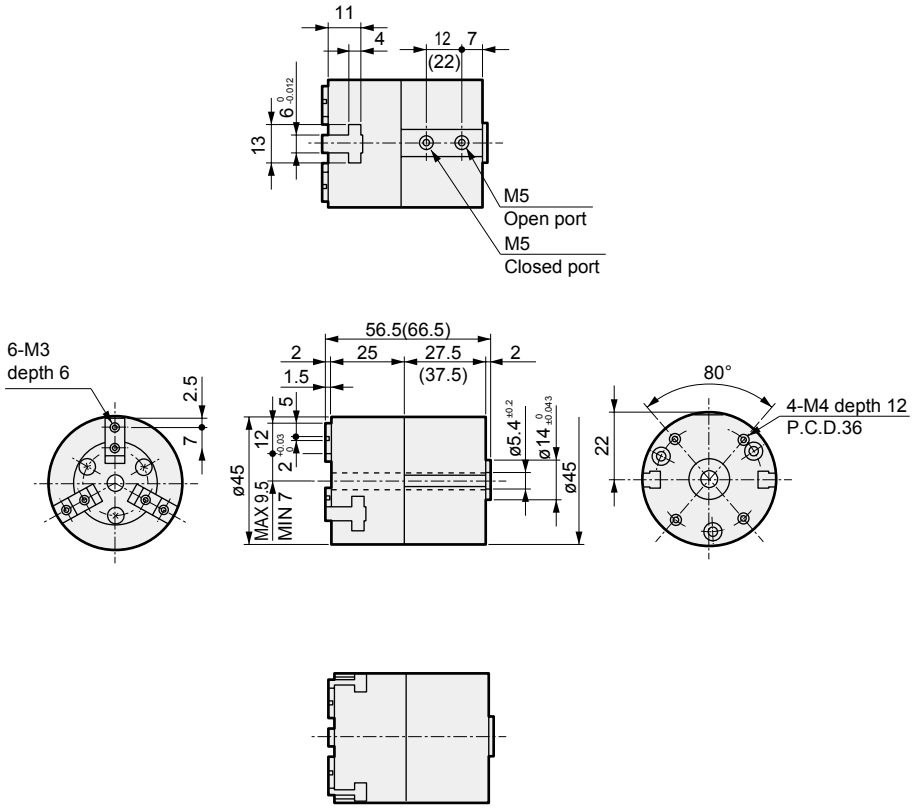

● With switch

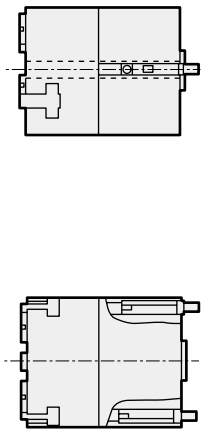

● CKF-20CS standard/O/C

· Dimensions in ( ) are for O [normally open] and C [normally closed] specifications.

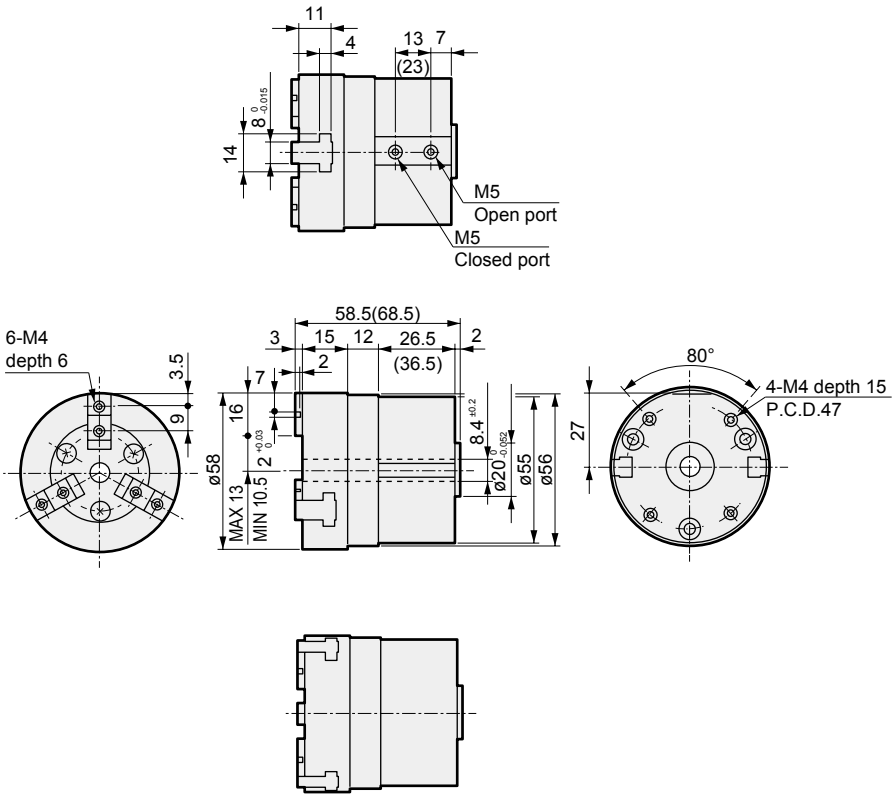

● With switch

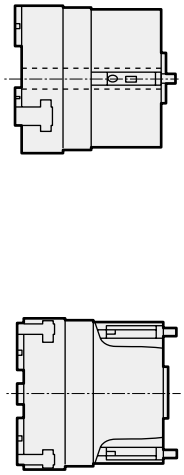

LCM
LCR
LCG
LCW
LCX
STM
STG
STS/STL
STR2
UCA2
ULK*
JSK/M2
JSG
JSC3/JSC4
USSD
UFCD
USC
UB
JSB3
LMB
LML
HCM
HCA
LBC
CAC4
UCAC2
CAC-N
UCAC-N
RCS2
RCC2
PCC
SHC
MCP
GLC
MFC
BBS
RRC
GRC
RV3*
NHS
HRL
LN
Hand
Chuk
MecHnd/Chuk
ShkAbs
FJ
FK
SpdContr
Ending
CKL2
CKLG2
CKL2-HC
CKH2
CKLB2
CKG
CK
CKA
CKS
CKS-F
CKF
CKJ
CHC

Dimensions CAD

● CKF-25CS standard/O/C

· Dimensions in ( ) are for O [normally open] and C [normally closed] specifications.

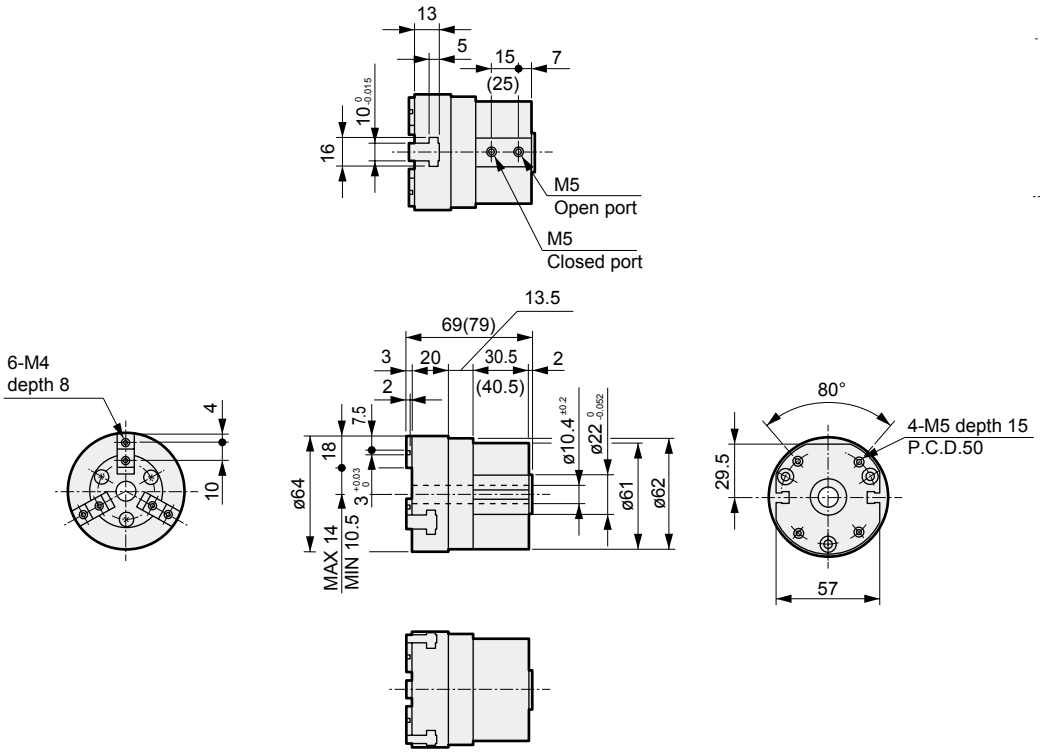

● With switch

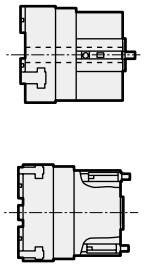

● CKF-30CS standard/O/C

· Dimensions in ( ) are for O [normally open] and C [normally closed] specifications.

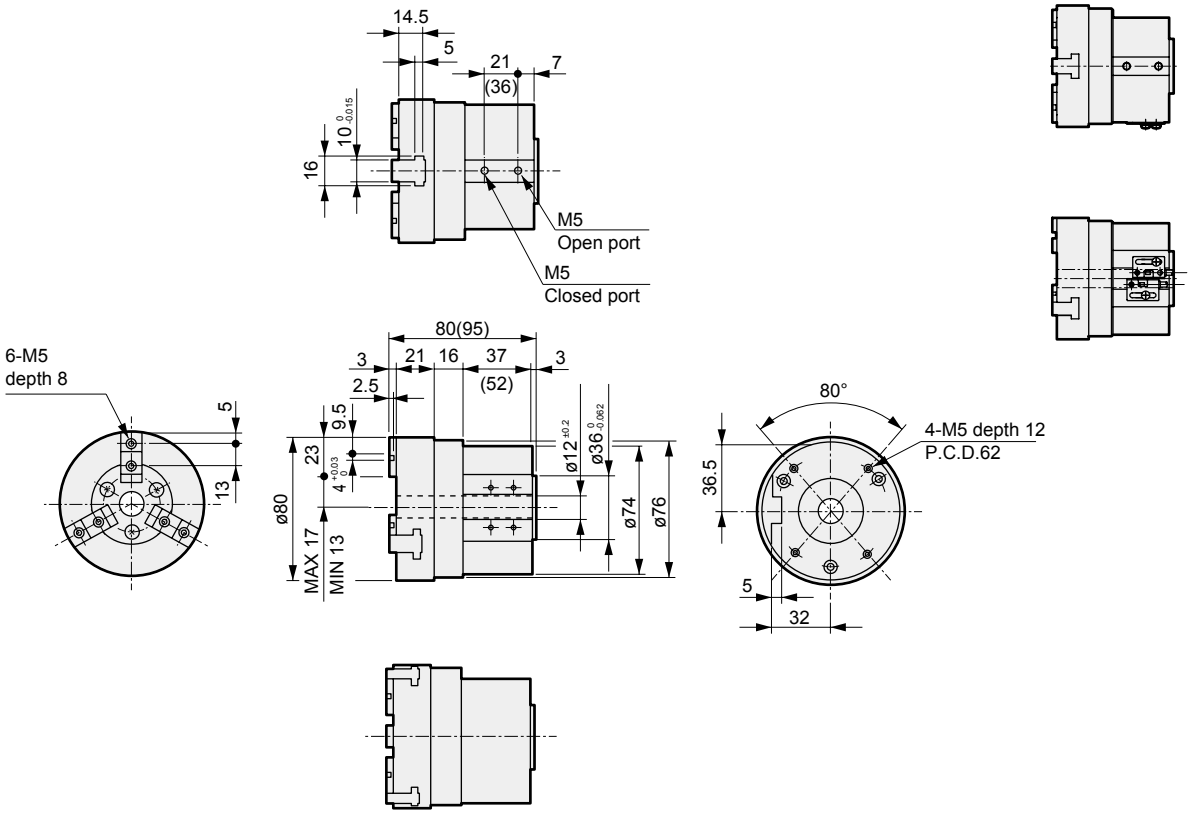

● With switch

Dimensions

● CKF-40CS standard/O/C

· Dimensions in ( ) are for O [normally open] and C [normally closed] specifications.

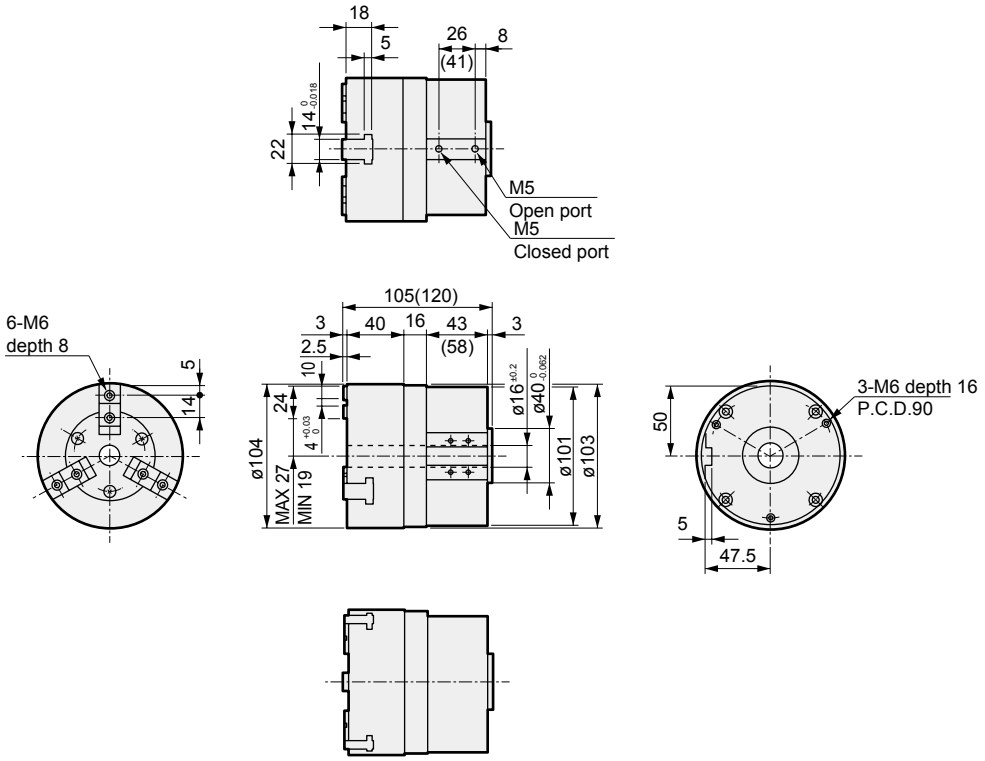

● With switch

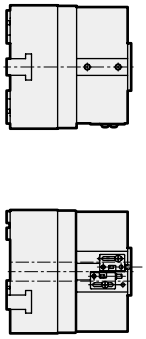

Ultra long stroke chuck Double acting
(standard/short stroke)

CKJ Series

● Operational stroke length: Standard 80, 130 mm
Short stroke 40, 65 mm

Double acting

RoHS CAD

Specifications

Item	CKJ					
Size	16CS		40CS		63CS	
	Standard	S1	Standard	S1	Standard	S1
Bore size mm	ø12×6		ø32×6		ø50×6	
Working fluid	Compressed air					
Max. working pressure MPa	0.7 (≈100 psi, 7 bar)					
Min. working pressure MPa	0.3 (≈44 psi, 3 bar)					
Ambient temperature °C	5 (41°F) to 60 (140°F)					
Port size	M5				Rc1/8	
Operating stroke length mm	80	40	80	40	130	65
Rod diameter mm	ø6		ø12		ø14	
Volumetric capacity (reciprocating) cm^3	47.4	24.0	358.8	179.4	1471.2	735.6
Repeatability mm	±0.1					
Weight kg	2.38	1.35	5.6	4.2	18.5	13
Lubrication	Not required (use turbine oil class 1 ISO VG32 if necessary for lubrication)					

Switch specifications

Item	Proximity 2-wire	Proximity 3-wire
	T2H/V	T3H/V
Applications	Dedicated for programmable controller	For programmable controller, relay
Output method	-	NPN output
Power supply voltage	-	10 to 28 VDC
Load voltage/current	10 to 30 VDC, 5 to 20 mA (*1)	30 VDC or less, 100 mA or less
Indicator lamp	LED (Lit when ON)	
Leakage current	1 mA or less	10 μA or less
Weight	1 m:18 g 3 m:49 g 5 m:80 g	

*1 : The above max. load current is 20 mA at 25°C. The current is lower than 20 mA if the operating ambient temperature around the switch is higher than 25˚C. (5 to 10 mA at 60˚C)

*2 : Refer to Ending Page 1 for detailed switch specifications and dimensions.

How to order

Without switch (built-in magnet for switch)

CKJ - 16CS - S1

With switch (built-in magnet for switch)

CKJ - 16CS - S1 - T2H - R

Ⓐ Size

Ⓑ Option

Ⓒ Switch model No.

Ⓓ Switch quantity

Code	Description
Ⓐ Size	
16CS	
40CS	
63CS	
Ⓑ Option	
Blank	Standard
S1	Short stroke

Ⓒ Switch model No.

Axial lead wire	Radial lead wire	Contact	Voltage AC	Voltage DC	Display	Lead wire
T2H*	**T2V***	Proximity		●	1-color display	2-wire
T3H*	**T3V***			●		3-wire

*** Lead wire length**	
Blank	1 m (standard)
3	3 m (option)
5	5 m (option)

Ⓓ Switch quantity	
R	1 on open side
H	1 on closed side
D	2

[Example of model No.]

CKJ-16CS-S1-T2H-R

Model: Ultra long stroke chuck

Ⓐ Size : 16CS
Ⓑ Option : Short stroke
Ⓒ Switch model No. : Proximity T2H switch, lead wire 1 m
Ⓓ Switch quantity : 1 on open side

How to order switch

SW – T2H

Switch model No.
(Item Ⓒabove)

LCM
LCR
LCG
LCW
LCX
STM
STG
STS/STL
STR2
UCA2
ULK*
JSK/M2
JSG
JSC3/JSC4
USSD
UFCD
USC
UB
JSB3
LMB
LML
HCM
HCA
LBC
CAC4
UCAC2
CAC-N
UCAC-N
RCS2
RCC2
PCC
SHC
MCP
GLC
MFC
BBS
RRC
GRC
RV3*
NHS
HRL
LN
Hand
Chuk
MecHnd/Chuk
ShkAbs
FJ
FK
SpdContr
Ending
CKL2
CKLG2
CKL2-HC
CKH2
CKLB2
CKG
CK
CKA
CKS
CKS-F
CKF
CKJ
CHC

Internal structure and parts list

● CKJ-16CS

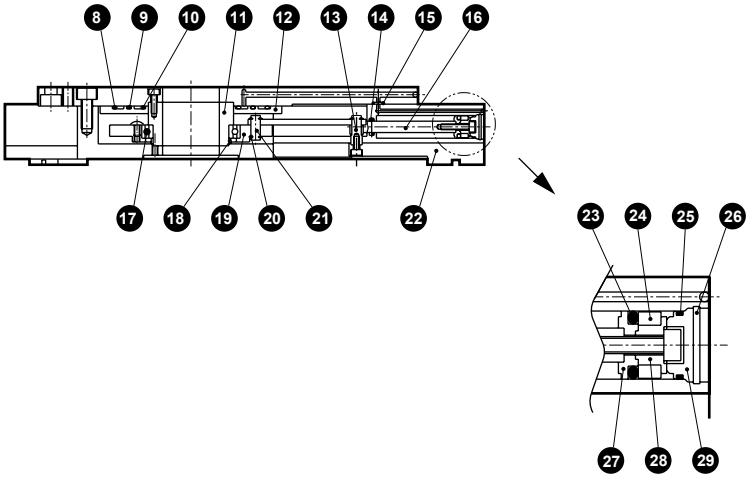

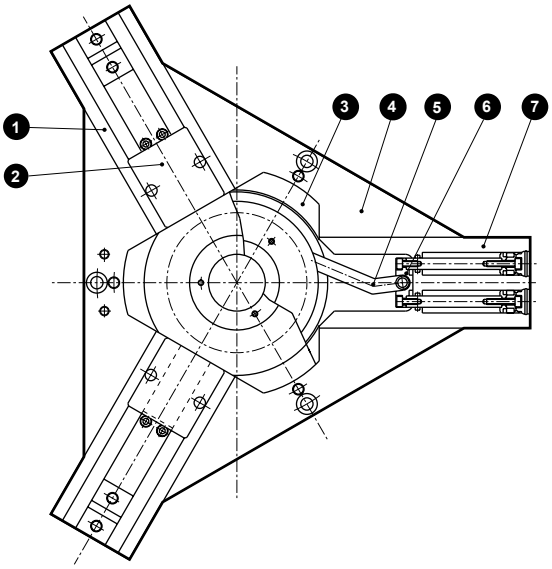

● CKJ-40CS

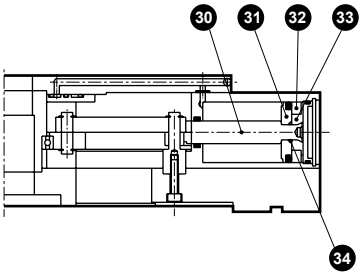

Cannot be disassembled

Internal structure and parts list

● CKJ-63CS

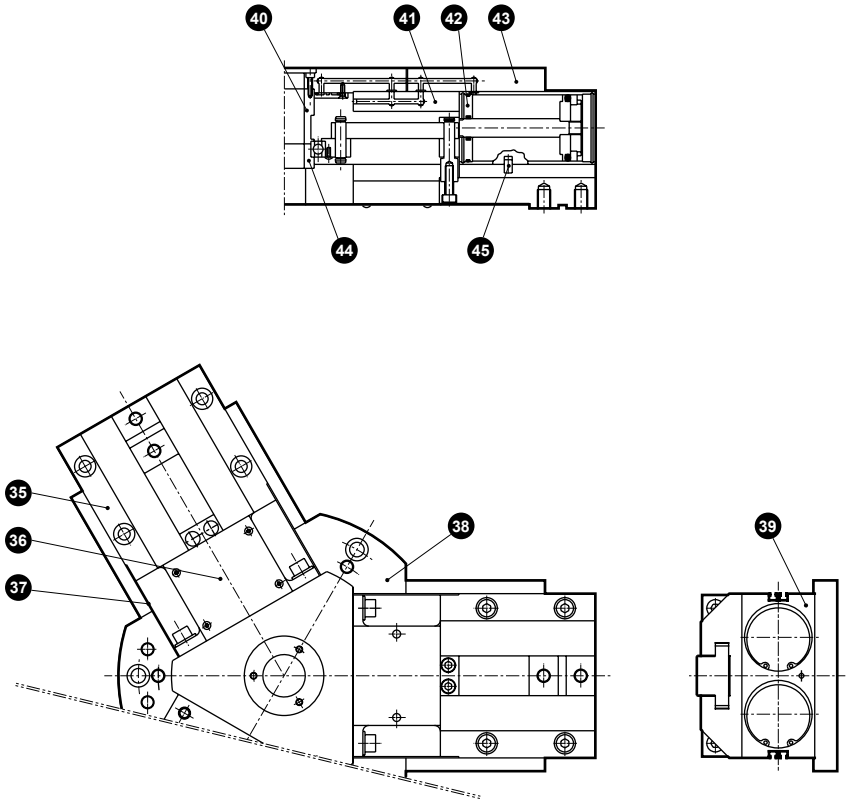

Cannot be disassembled

Parts list

No.	Part name	Material	Remarks	No.	Part name	Material	Remarks
1	Cylinder body B	Aluminum alloy		24	Magnet		
2	Cover	Stainless steel		25	Cylinder sealant	Nitrile rubber	
3	Center block	Aluminum alloy		26	C type snap ring	Carbon steel	
4	Base	Aluminum alloy		27	Piston A	Aluminum alloy	
5	Link	Stainless steel	63CS is carbon steel	28	Piston B	Aluminum alloy	63CS is stainless steel
6	Connection block	Stainless steel	63CS is carbon steel	29	Cylinder guard	Acetal resin	63CS is aluminum alloy
7	Cylinder body A	Aluminum alloy		30	Piston rod	Stainless steel	
8	O-ring	Nitrile rubber		31	Piston A	Aluminum alloy	
9	O-ring	Nitrile rubber		32	Magnet		
10	O-ring	Nitrile rubber		33	Piston B	Aluminum alloy	
11	Hollow ring	Aluminum alloy		34	O-ring	Nitrile rubber	
12	Piping plate	Aluminum alloy		35	Body	Aluminum alloy	
13	Operation pin	Stainless steel	63CS is carbon steel	36	Front cover	Stainless steel	
14	Rod sealant	Nitrile rubber		37	Side cover	Stainless steel	
15	O-ring	Nitrile rubber		38	Base 1	Aluminum alloy	
16	Piston rod	Stainless steel		39	Cylinder	Aluminum alloy	
17	Bearing			40	Hollow ring 1	Aluminum alloy	
18	Collar	Carbon steel		41	Base 3	Aluminum alloy	
19	Link ring	Aluminum alloy		42	Rod cover	Aluminum alloy	
20	E type snap ring	Carbon steel		43	Base 2	Aluminum alloy	
21	Fulcrum axis	Stainless steel	63CS is carbon steel	44	Hollow ring 2	Aluminum alloy	
22	Finger	Carbon steel		45	Parallel pin	Stainless steel	
23	Piston seal	Nitrile rubber					

LCM
LCR
LCG
LCW
LCX
STM
STG
STS/STL
STR2
UCA2
ULK*
JSK/M2
JSG
JSC3/JSC4
USSD
UFCD
USC
UB
JSB3
LMB
LML
HCM
HCA
LBC
CAC4
UCAC2
CAC-N
UCAC-N
RCS2
RCC2
PCC
SHC
MCP
GLC
MFC
BBS
RRC
GRC
RV3*
NHS
HRL
LN
Hand
Chuk
MecHnd/Chuk
ShkAbs
FJ
FK
SpdContr
Ending
CKL2
CKLG2
CKL2-HC
CKH2
CKLB2
CKG
CK
CKA
CKS
CKS-F
CKF
CKJ
CHC

Internal structure and parts list

● CKJ-16CS-S1

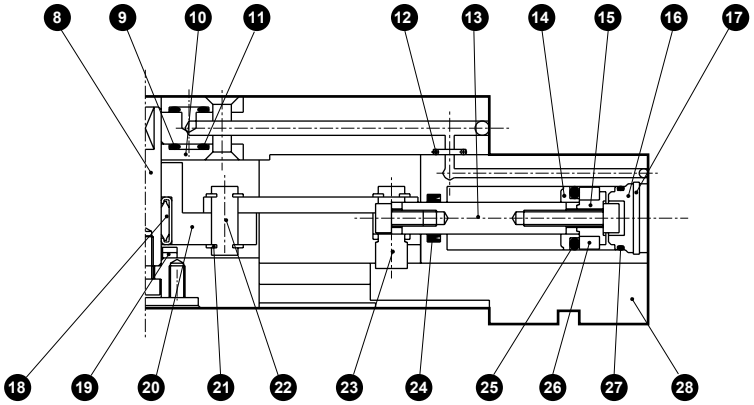

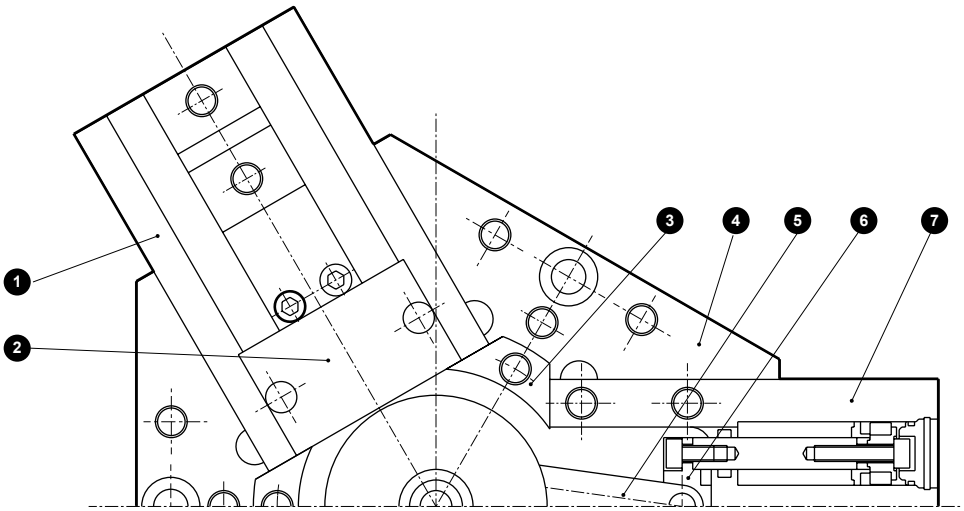

● CKJ-40CS-S1

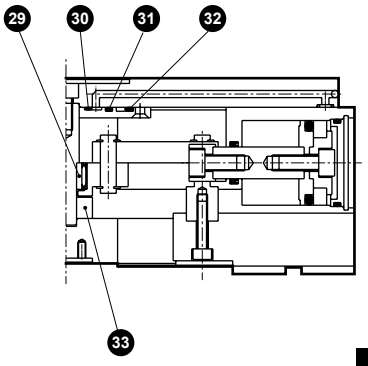

Cannot be disassembled

Internal structure and parts list

● CKJ-63CS-S1

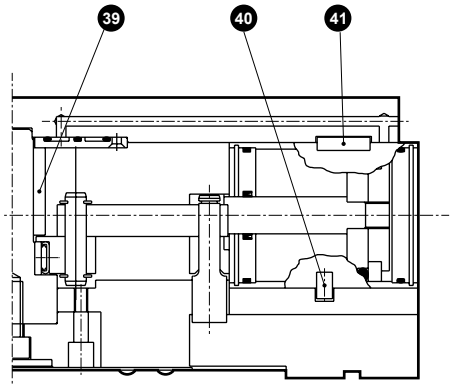

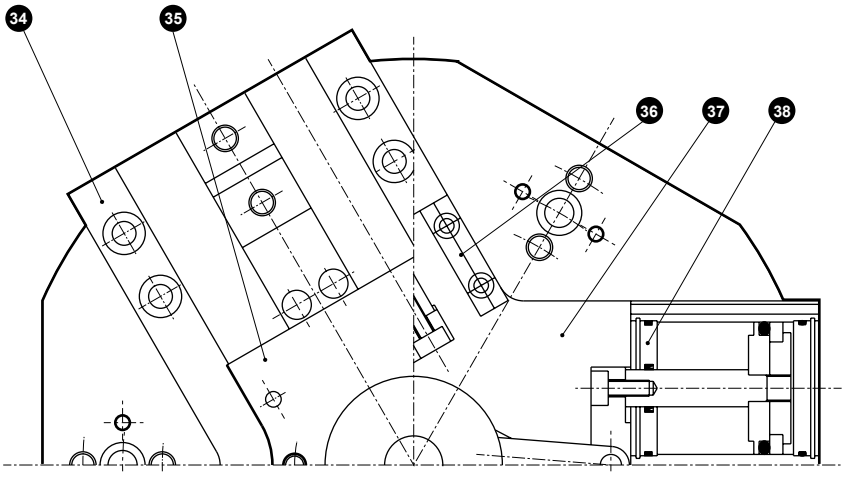

Cannot be disassembled

Parts list

No.	Part name	Material	Remarks	No.	Part name	Material	Remarks
1	Cylinder body B	Aluminum alloy		22	Fulcrum axis	Stainless steel	63CS is carbon steel
2	Cover	Stainless steel		23	Operation pin	Stainless steel	63CS is carbon steel
3	Center block	Aluminum alloy	63CS is carbon steel	24	Rod sealant	Nitrile rubber	
4	Base	Aluminum alloy		25	Piston seal	Nitrile rubber	
5	Link	Stainless steel	63CS is carbon steel	26	Magnet		
6	Connection block	Stainless steel	63CS is carbon steel	27	Cylinder sealant	Nitrile rubber	
7	Cylinder body A	Aluminum alloy		28	Finger	Carbon steel	
8	Shaft	Carbon steel	63CS is aluminum alloy	29	Inner ring		
9	O-ring	Nitrile rubber		30	O-ring	Nitrile rubber	
10	Piping plate	Aluminum alloy		31	O-ring	Nitrile rubber	
11	O-ring	Nitrile rubber		32	O-ring	Nitrile rubber	
12	O-ring	Nitrile rubber		33	Collar	Acetal resin	
13	Piston rod	Stainless steel		34	Body	Aluminum alloy	
14	Piston A	Aluminum alloy		35	Front cover	Stainless steel	
15	Piston B	Aluminum alloy	63CS is stainless steel	36	Side cover	Aluminum alloy	
16	Cylinder guard	Acetal resin	63CS is aluminum alloy	37	Cylinder	Aluminum alloy	
17	C type snap ring	Carbon steel		38	Rod cover	Aluminum alloy	
18	Needle rolling bearing			39	Metal collar	Carbon steel	
19	Washer			40	Parallel pin	Stainless steel	
20	Link ring	Aluminum alloy		41	Double round key	Carbon steel	
21	E type snap ring	Carbon steel					

LCM
LCR
LCG
LCW
LCX
STM
STG
STS/STL
STR2
UCA2
ULK*
JSK/M2
JSG
JSC3/JSC4
USSD
UFCD
USC
UB
JSB3
LMB
LML
HCM
HCA
LBC
CAC4
UCAC2
CAC-N
UCAC-N
RCS2
RCC2
PCC
SHC
MCP
GLC
MFC
BBS
RRC
GRC
RV3*
NHS
HRL
LN
Hand
Chuk
MecHnd/Chuk
ShkAbs
FJ
FK
SpdContr
Ending
CKL2
CKLG2
CKL2-HC
CKH2
CKLB2
CKG
CK
CKA
CKS
CKS-F
CKF
CKJ
CHC

Gripping power performance data

- Gripping power represents the thrust (per one finger) in the arrow direction shown in the figure.
- The gripping power at a supply pressure 0.3, 0.5, and 0.7 MPa with jaw length ℓ of hand is shown.
  - ● Open direction (⇦) - - - - - - - - - - (shown with broken line)
  - ● Closed direction (➡) ———————— (shown with continuous line)

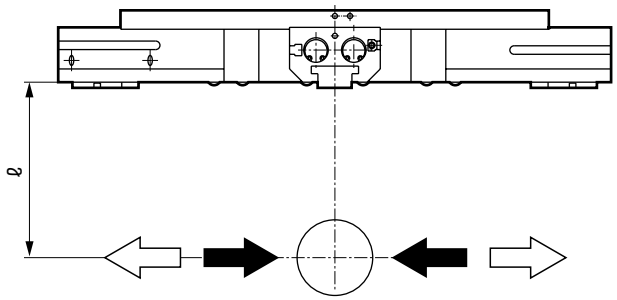

● CKJ-16CS

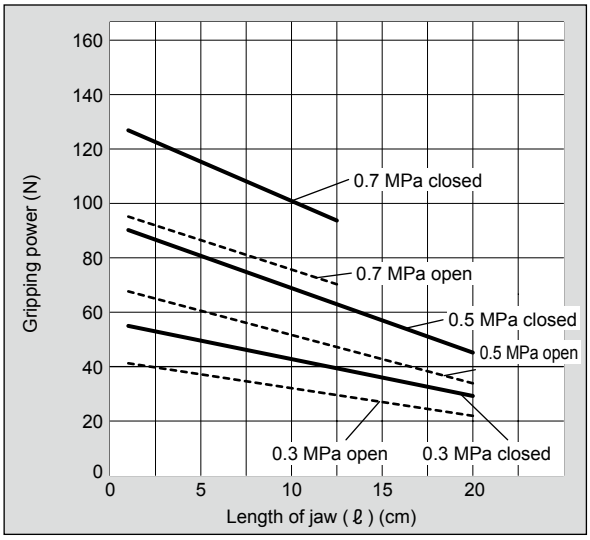

● CKJ-40CS

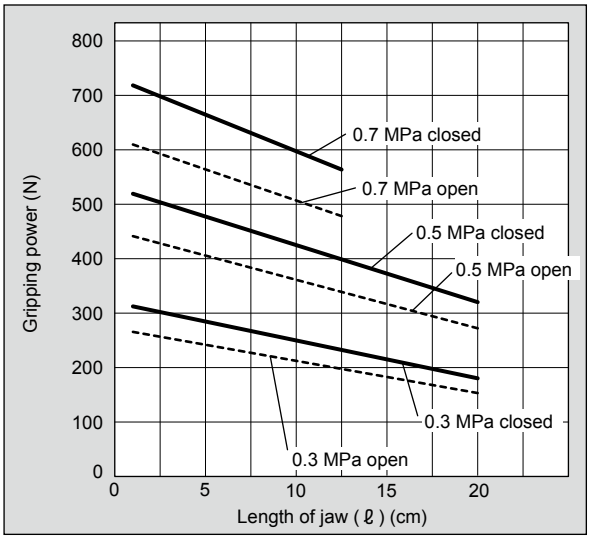

● CKJ-63CS

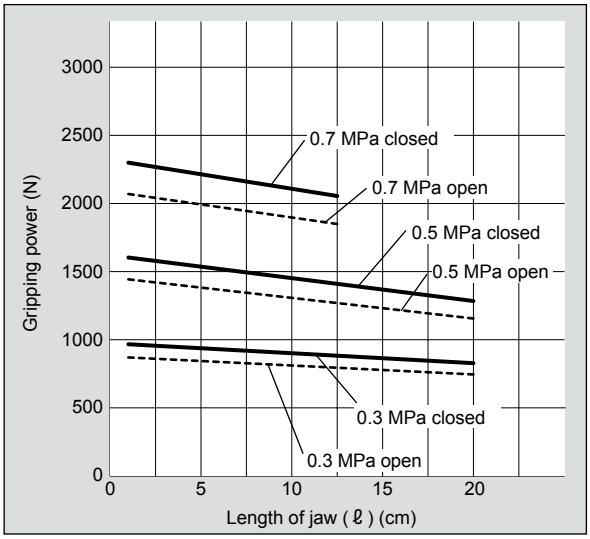

(Note) When making a selection, read the precautions for design and selection on page 1872.

Dimensions

● CKJ-16CS standard

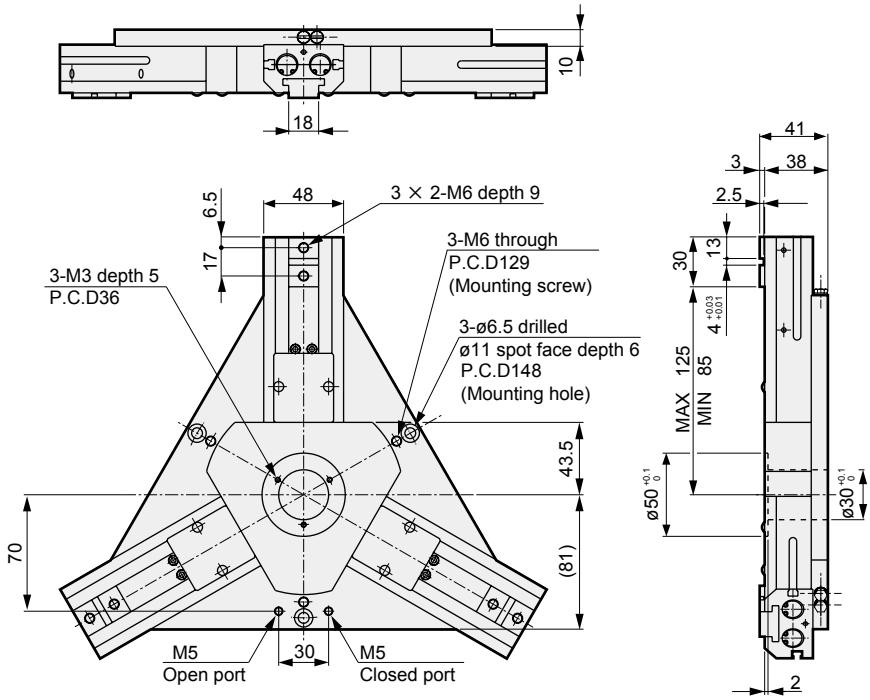

● With switch

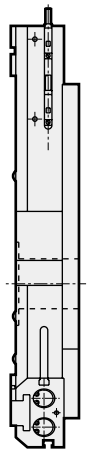

● CKJ-16CS-S1

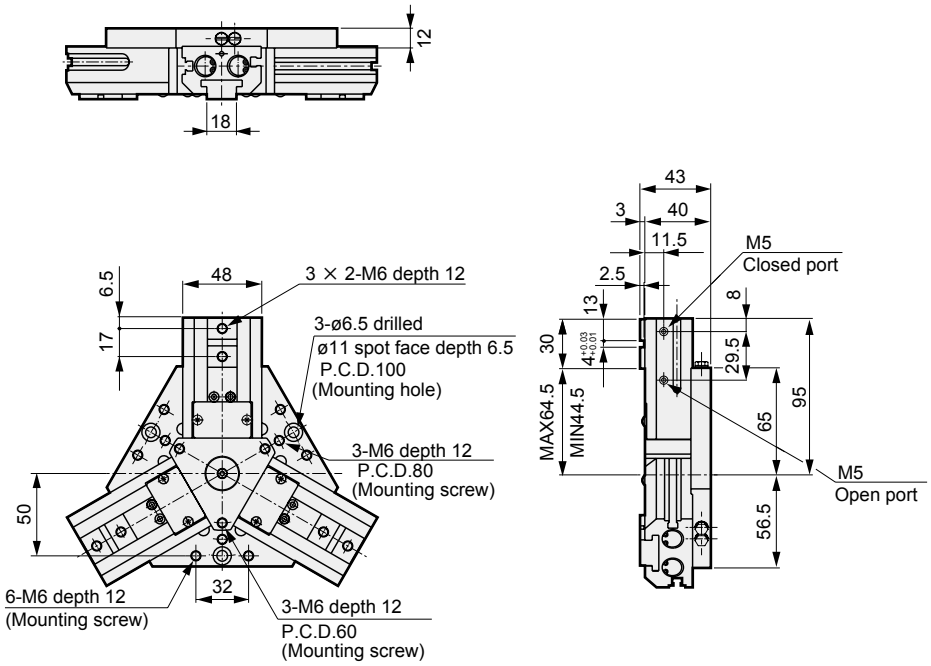

● With switch

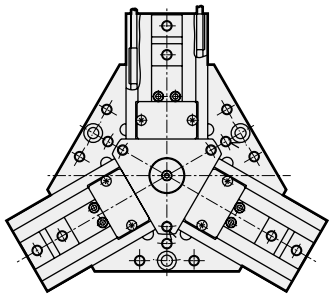

LCM
LCR
LCG
LCW
LCX
STM
STG
STS/STL
STR2
UCA2
ULK*
JSK/M2
JSG
JSC3/JSC4
USSD
UFCD
USC
UB
JSB3
LMB
LML
HCM
HCA
LBC
CAC4
UCAC2
CAC-N
UCAC-N
RCS2
RCC2
PCC
SHC
MCP
GLC
MFC
BBS
RRC
GRC
RV3*
NHS
HRL
LN
Hand
Chuk
MecHnd/Chuk
ShkAbs
FJ
FK
SpdContr
Ending
CKL2
CKLG2
CKL2-HC
CKH2
CKLB2
CKG
CK
CKA
CKS
CKS-F
CKF
CKJ
CHC

Dimensions

● CKJ-40CS standard

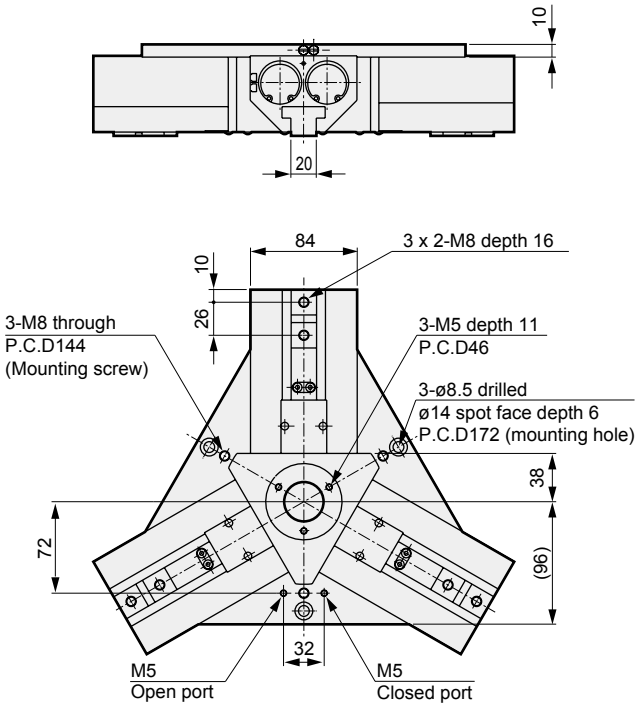

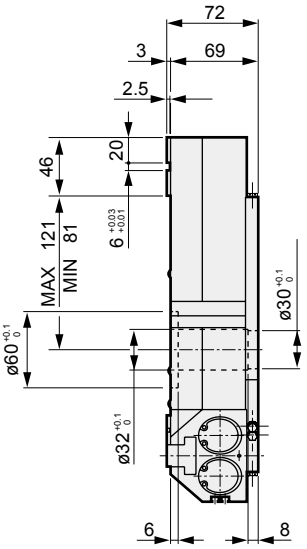

● With switch

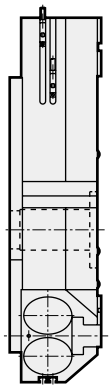

● CKJ-40CS-S1

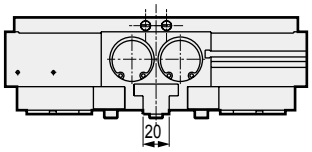

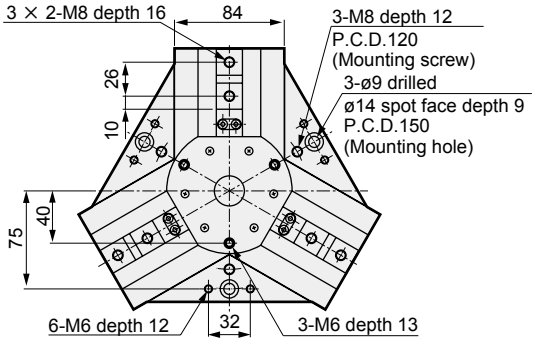

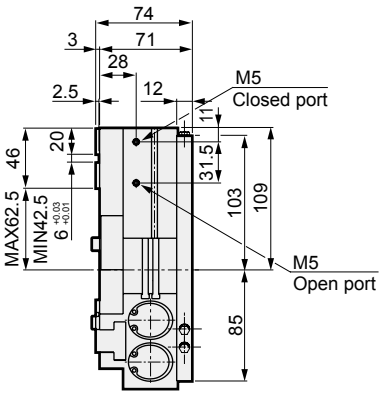

● With switch

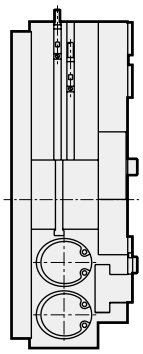

Dimensions

● CKJ-63CS standard

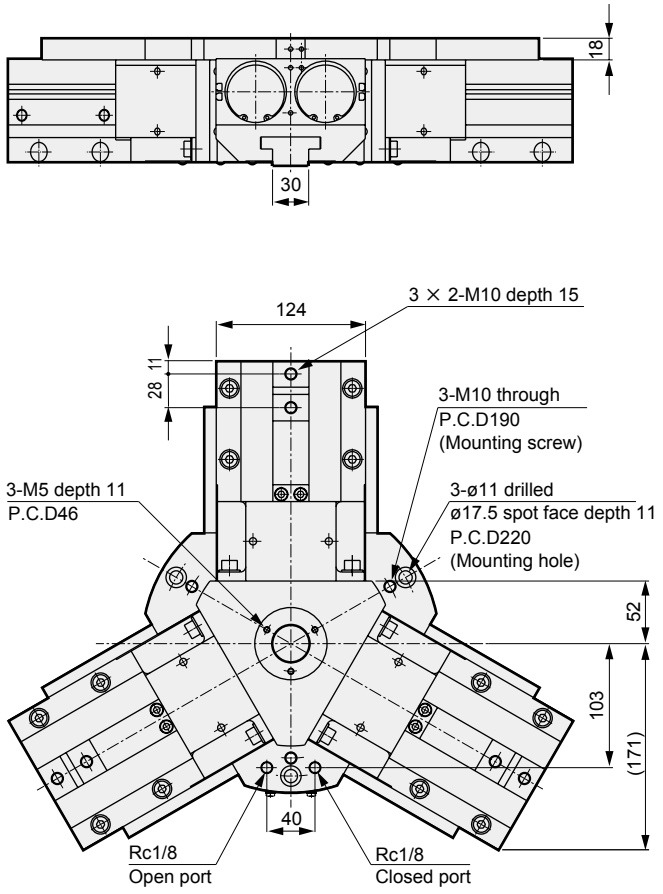

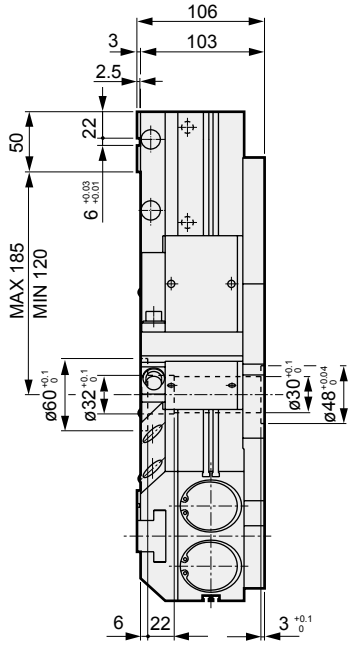

● With switch

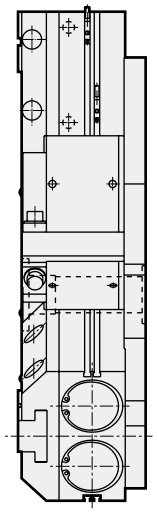

● CKJ-63CS-S1

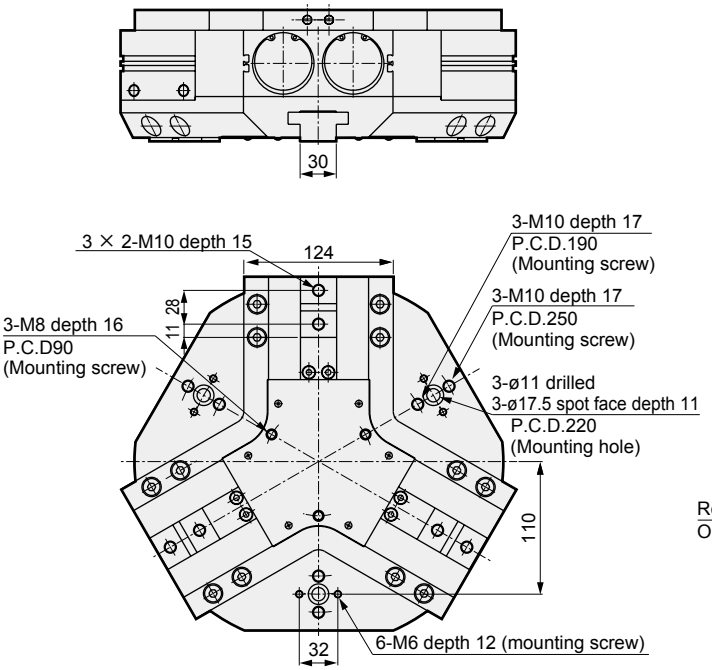

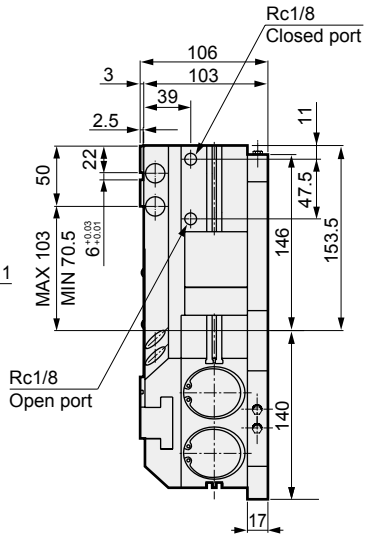

● With switch

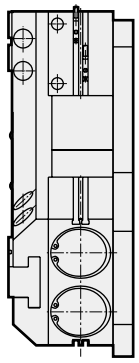

Attachment

● Material: Iron, engineering plastic

RoHS CAD

Features

Attachments machined for use with a variety of models are available to match user workpieces.

● Spigot section machined

Troublesome reference section (spigot section) machined.

Wide series variation to select according to workpiece shape and dimension.

● 2 types of material for attachment

Iron (S50C) and engineering plastic (MC nylon) are available for optimum selection according to material and working condition of workpiece.

Compatible model for standard attachment

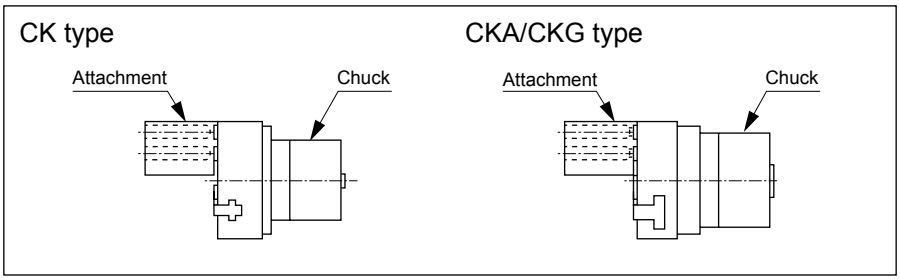

Attachment applications

Chuck applications		
Soft jaw 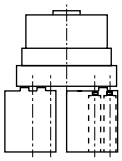	Compact workpiece 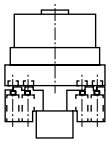	Large workpiece 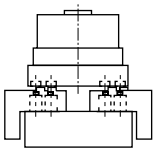
For large and small workpieces 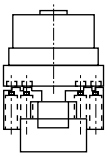	For inner tensive large and small workpieces 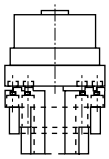	

How to order

(Note: When ordering repair parts, 1 pc. is provided.)

CKA - Y1 - 610

Ⓐ Model Ⓑ Material Ⓒ Attachment No.

Ⓐ Model	
Code	Description
CKG	3-way jaw bearing chuck
CK	3-way jaw long stroke chuck
CKA	3-way jaw thin chuck
CKF	Hollow chuck

Ⓑ Material	
Code	Description
Y1	Material S50C
Y2	Material MC nylon

Ⓒ Attachment No.	
Code	Compatibility
510	CKG-16CS,CKA-15CS,CKF-15CS
520	CKG-25CS,CKA-20CS,CKF-20CS
530	CKG-32CS,CKA-25CS,CKF-25CS
540	CKG-40CS,CKA-30CS,CKF-30CS
610	CKG-25CS,CKA-20CS,CKF-20CS
620	CKG-32CS,CKA-25CS,CKF-25CS
630	CKG-40CS,CKA-30CS,CKF-30CS
710	CKG-50CS,CKA-40CS,CKF-40CS
720	CK-1CS
730	CK-1.5CS
740	CK-2CS
750	CKA-50CS
760	CKA-60CS
770	CKA-70CS

Dimensions

● **510 to 540 (For external diameter chuck)**

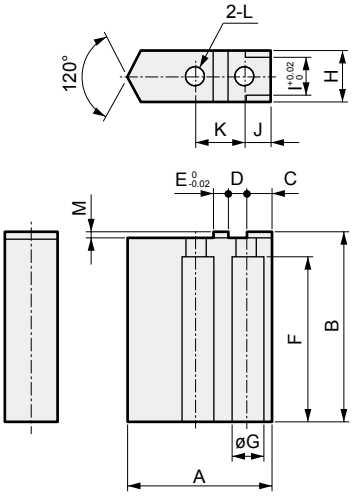

*1 Y1 : Material S50C
*2 Y2 : Material MC nylon

Code		A	B	C	D	E	F	øG	H	I	J	K	øL	M	Weight (g)	
Attachment No.	Compatibility														Y1*1	Y2*2
510	CKA-15CS CKG-16CS CKF-15CS	17.5	25	3.5	2.5	2	20	6	8	6	3.5	7	3.5	1	17	5
520	CKA-20CS CKG-25CS CKF-20CS	24	30	4.5	3.5	2	24.5	8	12	8	4.5	9	4.5	1.5	45	11
530	CKA-25CS CKG-32CS CKF-25CS	31	40	4.5	3.5	3	34.5	8	14	10	4.5	10	4.5	1.5	103	21
540	CKA-30CS CKG-40CS CKF-30CS	37	50	6	4.5	4	43	9.5	14	10	6	13	5.5	2	136	30

● **610 to 630 (For internal diameter chuck)**

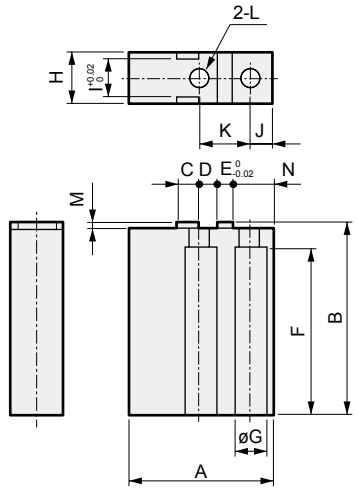

*1 Y1 : Material S50C
*2 Y2 : Material MC nylon

Code		A	B	C	D	E	F	øG	H	I	J	K	øL	M	N	Weight (g)	
Attachment No.	Compatibility															Y1*1	Y2*2
610	CKA-20CS CKG-25CS CKF-20CS	30	30	4.5	3.5	2	24.5	8	12	8	4.5	9	4.5	1.5	8	65	10
620	CKA-25CS CKG-32CS CKF-25CS	35	40	4.5	3.5	3	34.5	8	14	10	4.5	10	4.5	1.5	8	126	19
630	CKA-30CS CKG-40CS CKF-30CS	45	50	6	4.5	4	43	9.5	14	10	6	13	5.5	2	10.5	188	28

● **710 to 770**

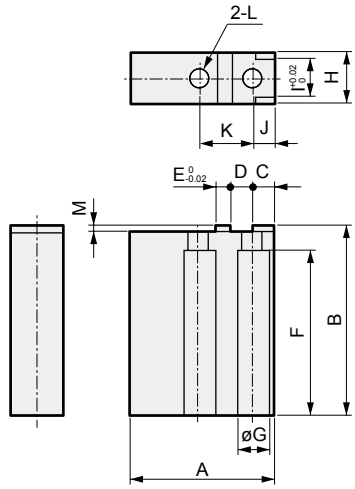

*1 Y1 : Material S50C
*2 Y2 : Material MC nylon

Code		A	B	C	D	E	F	øG	H	I	J	K	øL	M	Weight (g)	
Attachment No.	Compatibility														Y1*1	Y2*2
710	CKA-40CS CKG-50CS CKF-40CS	44.5	60	6	5	4	52	11	18	14	6	14	6.5	2	285	43
720	CK-1CS	33.5	50	6	5	4	43	9.5	14	10	6	14	5.5	2	128	19
730	CK-1.5CS	43.5	65	7	6.5	5	56	11	18	14	7	18	6.5	2	302	45
740	CK-2CS	55.5	80	8	7	6	71	14	19	14	8	20	8.5	2	471	70
750	CKA-50CS	51.5	70	6	5	5	58	11	18	14	6	15	6.5	2	402	62
760	CKA-60CS	64	80	8	6	6	68	14	20	16	8	18	9	2	608	94
770	CKA-70CS	74	100	8	7	6	88	14	20	16	8	20	9	2	913	140

How to order attachment and dimensions

How to order

(Note: When ordering repair parts, 1 pc. is provided.)

CKL2 - Y1 - 810

Ⓐ Material

Ⓑ Attachment No.

Code	Description
Ⓐ Material	
Y1	Material S50C
Y2	Material MC nylon

Code	Compatibility
Ⓑ Attachment No.	
810	CKL2-20CS,CKLG2-20CS,CKLB2-20CS
820	CKL2-25CS,CKLG2-25CS,CKLB2-25CS
830	CKL2-32CS,CKLG2-32CS,CKLB2-32CS
840	CKL2-40CS,CKLG2-40CS,CKLB2-40CS
850	CKL2-50CS,CKLG2-50CS,CKH2-50CS,CKLB2-50CS
860	CKL2-63CS,CKLG2-63CS,CKH2-63CS,CKLB2-63CS
870	CKL2-80CS,CKLG2-80CS,CKH2-80CS,CKLB2-80CS
880	CKL2-100CS,CKLG2-100CS,CKH2-100CS,CKLB2-100CS

Dimensions

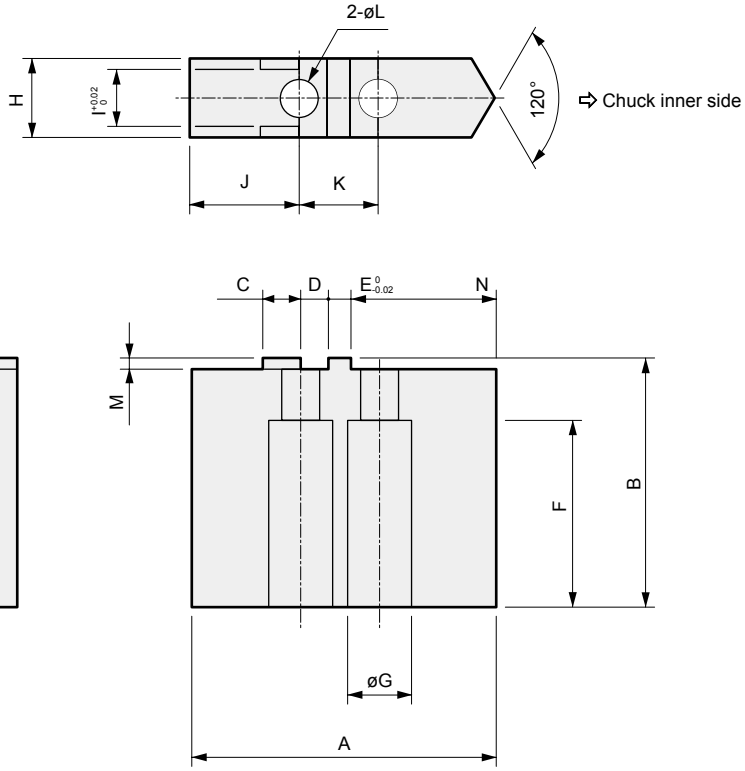

Code / Attachment No.	A	B	C	D	E	F	øG	H	I	J	K	øL	M	N	Weight (g) Y1	Weight (g) Y2
810	29.5	29	3.5	2.5	2	23	6.5	10	6	12	7	3.5	1	13	64	10
820	34.5	33.5	4.5	3.5	2	24	8	10	7	12.5	9	4.5	1.5	16.5	86	13
830	39.5	33.5	4.5	3.5	3	24	8	12	8	14	10	4.5	1.5	19	118	18
840	49.5	39	6	4.5	3	31	9	12	8	18.5	12	5.5	2	23.5	171	26
850	54.5	44	6	5	4	33	11	14	10	18.5	14	6.5	2	27	250	37
860	69.5	49	8	5.5	5	38	11	16	12	24.5	16	6.5	2	34.5	408	61
870	84.5	59	10	6	6	47	14	18	14	28	18	9	2	44.5	676	101
880	99.5	64	10	7	6	52	14	20	16	31.5	20	9	2	55	962	144

How to order attachment and dimensions

How to order

(Note: When ordering repair parts, 1 pc. is provided.)

CKS - **Y1** - **910**

Model

Ⓐ Material

Ⓑ Attachment No.

Code	Description
Ⓐ Material	
Y1	Material S50C
Y2	Material MC nylon

Code	Compatibility
Ⓑ Attachment No.	
910	CKS-08CS
920	CKS-12CS
930	CKS-16CS,CKS-F-16CS
940	CKS-20CS,CKS-F-20CS
950	CKS-25CS,CKS-F-25CS
960	CKS-32CS,CKS-F-32CS

Dimensions

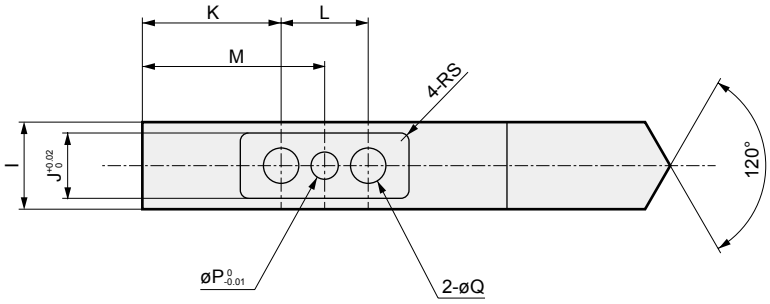

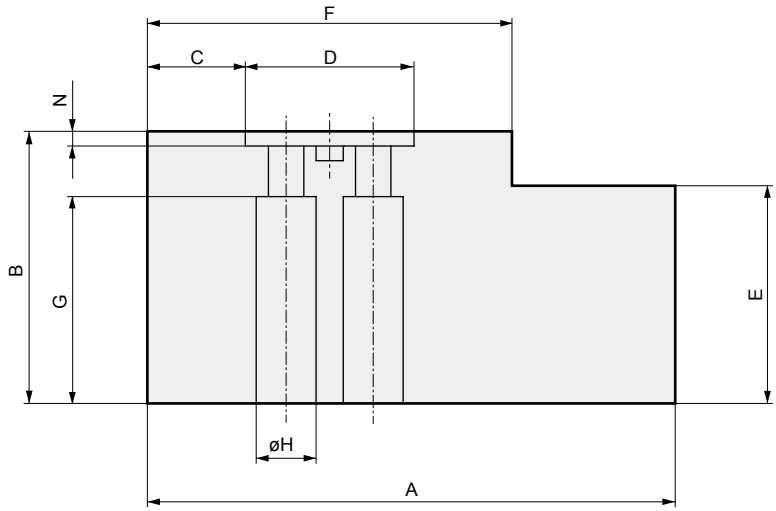

Code		A	B	C	D	E	F	G	H	I	J	K	L	M	N	P	Q	S	Weight (g)	
Attachment No.	Compatible models																		Y1	Y2
910	CKS-08CS	42.5	30	6.5	15	20	27.5	23	6.5	10	6	10.5	7	14	1.7	2	3.5	1	74	12
920	CKS-12CS	48	35	7.5	19	25	34	27	8	11	7	12.5	9	17	2.7	2	4.5	1	108	17
930	CKS-16CS,CKS-F-16CS	56.5	35	9.5	21	25	40.5	27	8	12	8	15	10	20	2.7	3	4.5	1	145	23
940	CKS-20CS,CKS-F-20CS	66.5	40	11	25	30	48	32	9.5	12	8	17.5	12	23.5	2.7	3	5.5	1.5	192	31
950	CKS-25CS,CKS-F-25CS	85.5	45	16	28	35	60	33	11	14	10	23	14	30	2.7	4	6.5	1.5	335	53
960	CKS-32CS,CKS-F-32CS	97	50	18	31	40	67	38	11	16	12	25.5	16	33.5	2.7	5	6.5	1.5	500	79

Safety Precautions

Be sure to read this section before use.

Refer to Intro Page 73 for general information of the cylinder, and to Ending Page 80 for general information of the cylinder switch.

Product-specific cautions: Chuck

Design/selection

WARNING

- If the moving workpiece poses a possible risk to personnel or if human fingers could be caught in the finger section, etc., install a protective cover, etc.
- If the circuit pressure drops due to power failure or air source trouble, the gripping force may decrease and the workpiece may fall. Provide position locking measures, etc., so that personnel are not injured or machines damaged.

CAUTION

- Precautions for gripping force
  - Gripping force represents the force holding the workpiece, as shown in the figure below.

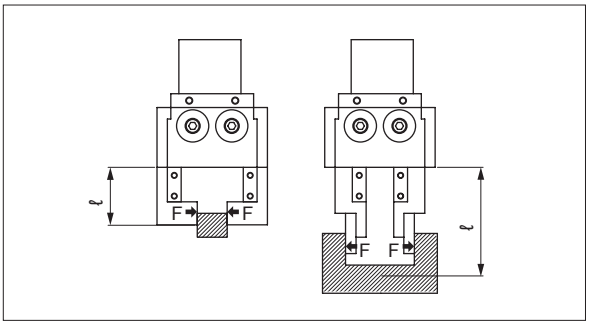

  - Performance data indicates the gripping force at hand finger length ℓ at a supply pressure of 0.15 to 0.7MPa.

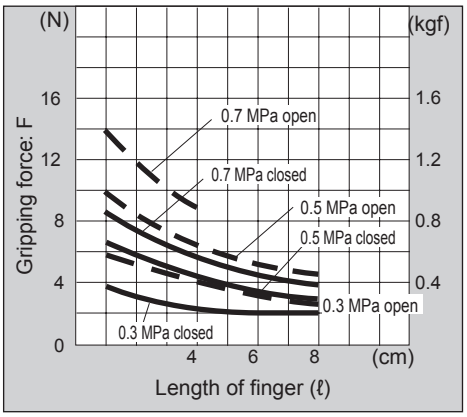

  - To find the gripping force from performance data, if the distance from the attachment to the workpiece center of gravity when manufactured is ℓ, gripping force F is
    When ℓ=ℓ1 F = F1
    When ℓ=ℓ2 F = F2 Refer to the upper right figure
    is expressed as above.
  - When mounting an L-shaped attachment, select length as shown below.
    Example:If the L-shape is 30mm in the finger direction and 30mm at a 90° angle, assume the attachment length is 60mm.
  - Length of attachment should be within the numerical value given in the gripping force performance data table of each model.
  - Max. working length of attachment should be within the performance data.
  - Workpiece (weight W_L) with the following reference points.

$W_L \times 9.8 \times 5 < (F \times N)$[Holding only]
$W_L \times 9.8 \times 10 < (F \times N)$[Normal transport]
$W_L \times 9.8 \times 20 < (F \times N)$[Sudden accelerated transport]

W_L: Weight of workpiece [kg]
F: Gripping force [N]
N: Number of fingers [pcs.]

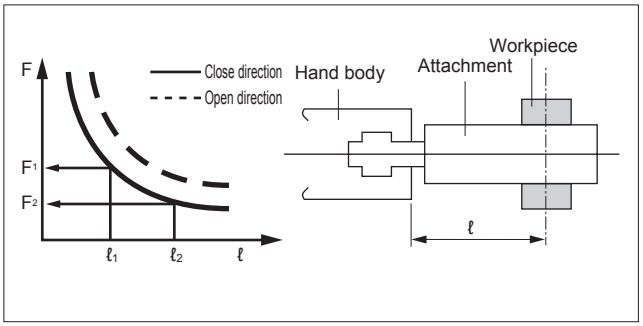

- Use attachments as short and lightweight as possible. If it is long or heavy, the inertial force during opening and closing will be large, which may cause the fingers to become loose or accelerate the wear of the finger sliding portion, which can have a negative impact on the lifespan.
  - Length of attachment should be within the numerical values of performance data.
  - The weight of the attachment affects durability, so check that the weight is less than the following value.
    W<1/4H(1 pc.) W: Weight of attachment
    H: Weight of Hand product

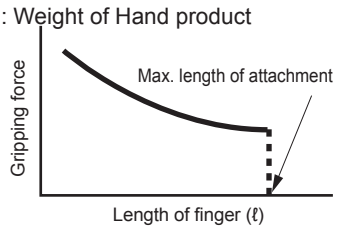

- Avoid gripping the workpiece with single acting spring force as much as possible. The gripping force may become unstable, leading to operation failure.
- With the single acting type, the spring force is minimized near the stroke end (open end for NO, closed end for NC). Due to the structure operated by the spring force, it may not return when operated with a short stroke; take care of the attachment shape so that the workpiece can be gripped with a margin in the stroke.

■ Working environment

At cutting, casting, or welding plants, there is a risk of foreign matter, such as cutting fluid, chips, powder and dust, entering the equipment. Use covers and such to prevent this as much as possible. Do not use the equipment under the following environments.

- Exposed to cutting oil (because the sliding section is abraded by abrasive or polishing debris in the liquid)
- When the atmosphere contains organic solvents, chemicals, acids, alkalis, kerosene, etc.
- Exposed to water

■ When gripping long or large workpieces, stable gripping requires a grip on the center of gravity. Stability is a must when using larger or multiple workpieces as well.

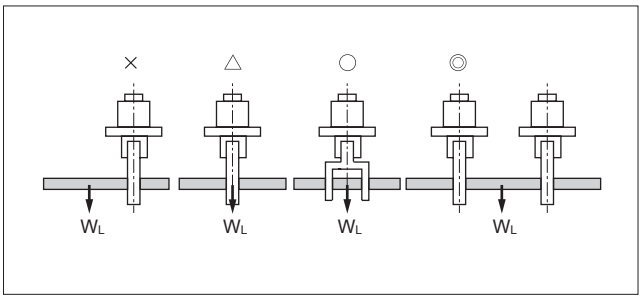

■ Select a model that has sufficient power to grip the workpiece weight.

■ Select a model that has sufficient opening/closing width for the workpiece size.

■ If directly installing the workpiece into the jig with a chuck, consider clearance during design. The chuck could be damaged.

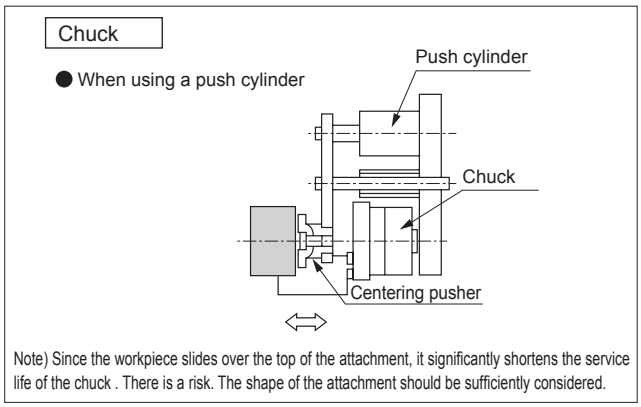

Note) Since the workpiece slides over the top of the attachment, it significantly shortens the service life of the chuck . There is a risk. The shape of the attachment should be sufficiently considered.

■ The rubber cover is a consumable part. Replace if necessary.

Mounting, installation and adjustment

⚠ CAUTION

■ If a lateral load or a load with large impact is applied to the finger, play or damage could occur. Adjust and check that external force is not applied to the finger.

■ Clamping operation is accurate when performed as softly as possible at a low speed. Repeatability is also stable.

■ Regularly grease the sliding section of the finger. Regular replenishment can extend service life further.

■ When installing the attachment, check that a lateral load is not applied to the finger.

■ Tighten with the following tightening torque when mounting.

Thread nominal	M3	M4	M5	M6	M8
Recommended tightening torque (N·m)	0.59	1.4	2.8	4.8	12.0

Use/maintenance

⚠ CAUTION

■ Do not disassemble or modify the body.

■ Repeatability

The repeatability here indicates the displacement of the finger in the case of repeated clamping and unclamping in the same conditions (chuck fixed, same attachment used: see below). Shock during opening and closing may lead to position misalignment of the workpiece and deterioration of repeatability. Note that wear to the attachment or insufficient rigidity may also decrease accuracy.

Conditions
- Attachment dimensions, shape, weight
- Attachment workpiece gripping position
- Clamp method, length
- Attachment and workpiece contact area resistance
- Shock-free opening and closing with speed controller
- Fluctuation of gripping force (air pressure), etc.

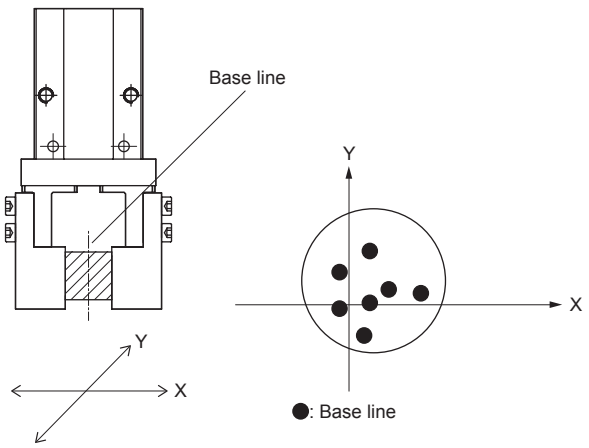

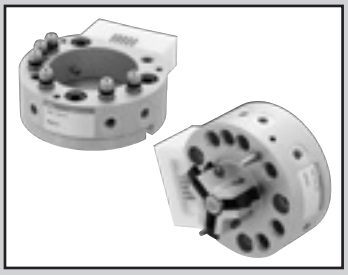

Auto hand changer

CHC Series

● Connected axial force: 78, 245, 676, 1087 N

Overview

Auto hand changer CHC Series is an automatic replacement unit for robotic arm tools.
Mount the body side on the robot, prepare the tool adapter side in accordance with the number of workpieces, and mount a tool such as a hand chuck.
When the body side and tool adapter side are connected, the air port and electrode (option) will be connected as well, so that air piping and electric wiring changes are not required at changeover.
Just switch the air connection to mount or remove the changer, enabling automatic replacement and significantly reducing changeover time.

Features

● High connection strength between body and adaptor, ensuring high rigidity
● Position locking mechanism prevents falling tools even when the drive source is cut off
● A wide range of options including D sub-connector are available

Specifications

Item			CHC			
Size			1	5	10	20
Load capacity		kg	1	5	10	20
Bore size		mm	ø45	ø64	ø78	ø88
Total length when connected		mm	36	43	49	56
Working fluid			Compressed air			
Max. working pressure		MPa	0.7 (≈101 psi, 7 bar)			
Min. working pressure		MPa	0.3 (≈44 psi, 3 bar)			
Ambient temperature		°C	5 (41°F) to 60 (140°F)			
Repeatability		mm	±0.01			
Connected axial force		N	78	245	676	1087
Moment when connected		N·m	3.1	11.8	34.3	76.6
Torque when connected		N·m	8.6	12.8	24.5	18.9
Weight		kg	0.187	0.35	0.65	0.9
Connection port size			M3	M5		
Pneumatic interface	No. of ports *1		6			
	Port size		M3	M5		
Electric interface *2	Contact		15 pcs, contact probe method			
	Contact capacity		2 A/pc			
	Electrical connections		D1/D: Specifications with solder D3: D-sub-connector (15-pin)			

*1 : Working pressure range is -100 kPa to 0.7 MPa; note that vacuum cannot be retained.
*2 : The electrode block for electric interface can be retrofitted.

How to order

· CHC body side

CHC - 5 R - D1

Ⓐ Size
Ⓑ Parts
Ⓒ Option

Code		Description
Ⓐ Size		
1		
5		
10		
20		
Ⓑ Parts		
R		Body side only
Ⓒ Option		
Blank		Standard
D1		Electrode block specification with solder
D3	*1	Electrode block D-sub-connector (socket)
B	*1	Check valve

*1: ⒶSize "1" cannot be selected.

· Tool adaptor side

CHC - 5 H - D

Ⓐ Size
Ⓑ Parts
Ⓒ Option

Code		Description
Ⓐ Size		
1		
5		
10		
20		
Ⓑ Parts		
H		Tool adaptor side only
Ⓒ Option		
Blank		Standard
D		Electrode block specification with solder
D3	*1	Electrode block D-sub-connector (socket)

*1: ⒶSize "1" cannot be selected.

Electrode block discrete model No. *When retrofitting the electrode block, order the following parts.

Part name	Size	Model No.	Description
Electrode block for body side	1	CHC-1RS-D1	Specifications with solder
	5	CHC-5RS-D1	Specifications with solder
		CHC-5RS-D3	D-sub-connector (socket)
	10	CHC-10RS-D1	Specifications with solder
		CHC-10RS-D3	D-sub-connector (socket)
	20	CHC-20RS-D1	Specifications with solder
		CHC-20RS-D3	D-sub-connector (socket)
Electrode block for tool adapter side	1	CHC-1HS-D	Specifications with solder
	5	CHC-5HS-D	Specifications with solder
		CHC-5HS-D3	D-sub-connector (socket)
	10	CHC-10HS-D	Specifications with solder
		CHC-10HS-D3	D-sub-connector (socket)
	20	CHC-20HS-D	Specifications with solder
		CHC-20HS-D3	D-sub-connector (socket)

Internal structure and parts list

Cannot be disassembled

● CHC-1 to 20R (body side)

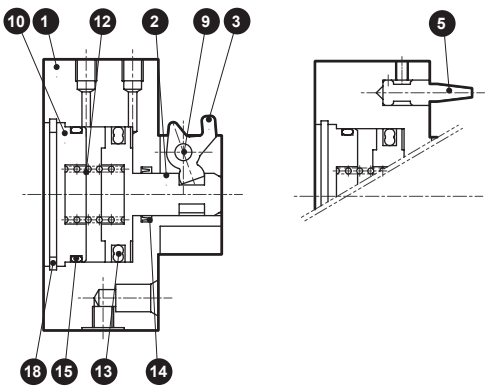

● CHC-1 to 20H (tool adaptor side)

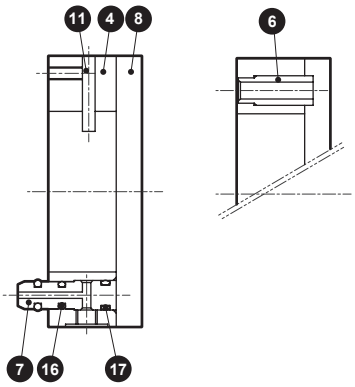

No.	Part name	Material	No.	Part name	Material
1	Body	Aluminum alloy	10	Cylinder guard	Aluminum alloy
2	Piston	Stainless steel	11	Operation shaft	Alloy steel
3	Arm	Stainless steel	12	Spring	Stainless steel
4	Tool adaptor	Aluminum alloy	13	Piston seal	Nitrile rubber
5	Positioning pin	Stainless steel	14	Rod sealant	Nitrile rubber
6	Positioning hole	Stainless steel	15	Cylinder sealant	Nitrile rubber
7	Air pin	Stainless steel	16	Air pin seal	Nitrile rubber
8	Tool plate	Aluminum alloy	17	Air pin seal	Nitrile rubber
9	Fulcrum axis	Steel	18	C-snap ring *1	Stainless steel

*1: Not available for 10R, 20R.

Internal structure and parts list with options

● Body side/with check valve
CHC-5 to 20R-B

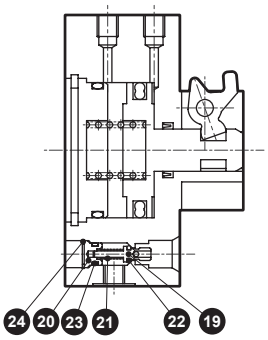

● Body side/with electrode block
CHC-1 to 20R-D1

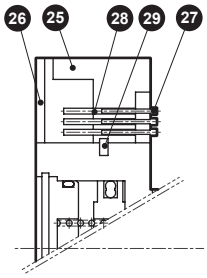

CHC-5 to 20R-D3

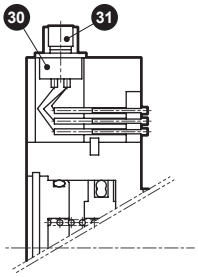

● Tool adaptor side/with electrode block
CHC-1 to 20H-D

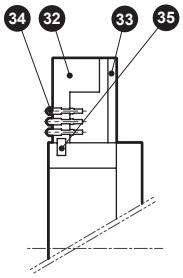

CHC-5 to 20H-D3

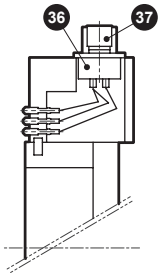

No.	Part name	Material
19	Spool	Stainless steel
20	Spool holder	Aluminum alloy
21	Spring	Stainless steel
22	Check valve seal 1	Nitrile rubber
23	Check valve seal 2	Nitrile rubber
24	C-snap ring	Stainless steel

*1 : Check valve cannot be retrofitted.

No.	Part name	Material
25	Electrode base	Resin
26	Base cover	Resin
27	Probe	
28	Receptacle	
29	Positioning pin	Alloy steel
30	D sub-connector	
31	Fitting fixing table	

No.	Part name	Material
32	Electrode base	Resin
33	Base cover	Resin
34	Electrode pin	
35	Positioning pin	Alloy steel
36	D sub-connector	
37	Fitting fixing table	

Dimensions (CHC-1)

● CHC-1

· Body side CHC-1R

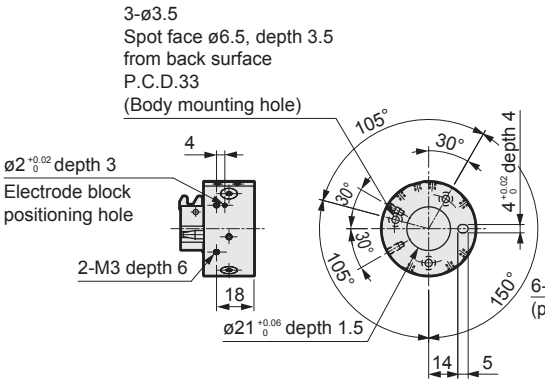

· Tool adaptor side CHC-1H

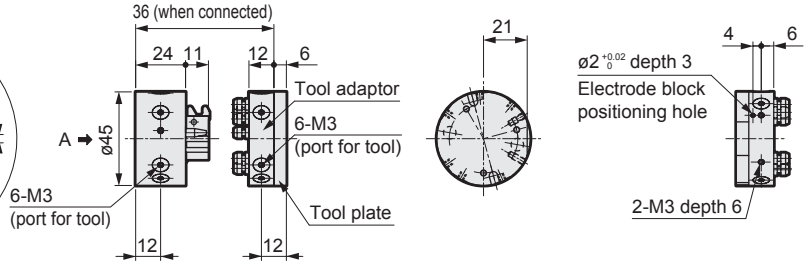

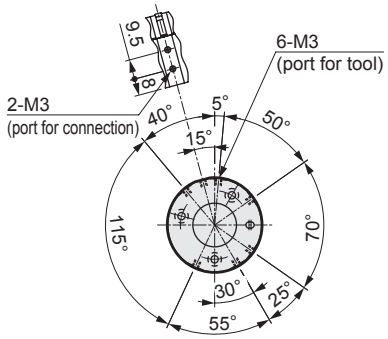

Piping port layout drawing (A section view)

Tool plate diagram

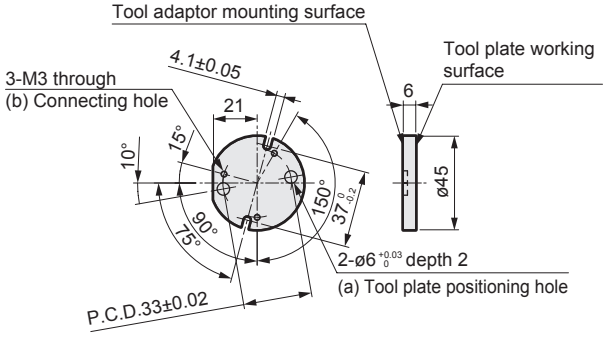

Note: If attaching a hand to the tool adaptor side, remove the tool plate and modify the tool plate working surface before attaching the hand. Avoid machining on (a) tool plate positioning hole and (b) connecting hole. If mounting on a different tool plate, drill (a) and (b) holes on the plate.

Dimensions with options

● With electrode block

·Body side CHC-1R-D1

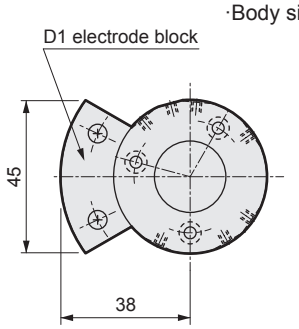

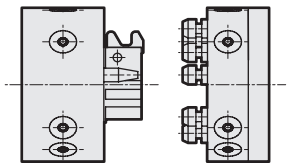

· Tool adaptor side CHC-1H-D

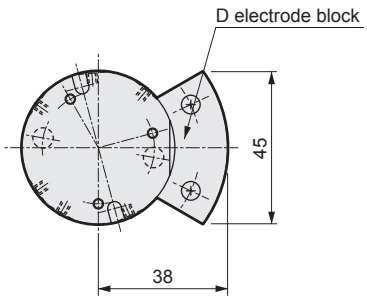

LCM
LCR
LCG
LCW
LCX
STM
STG
STS/STL
STR2
UCA2
ULK*
JSK/M2
JSG
JSC3/JSC4
USSD
UFCD
USC
UB
JSB3
LMB
LML
HCM
HCA
LBC
CAC4
UCAC2
CAC-N
UCAC-N
RCS2
RCC2
PCC
SHC
MCP
GLC
MFC
BBS
RRC
GRC
RV3*
NHS
HRL
LN
Hand
Chuk
MecHnd/Chuk
ShkAbs
FJ
FK
SpdContr
Ending
CKL2
CKLG2
CKL2-HC
CKH2
CKLB2
CKG
CK
CKA
CKS
CKS-F
CKF
CKJ
CHC

Dimensions (CHC-5)

● CHC-5

· Body side CHC-5R

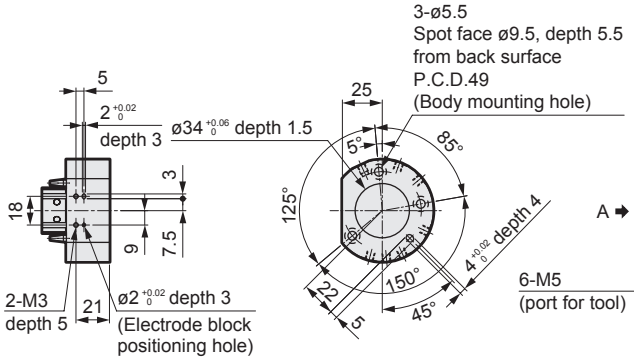

· Tool adaptor side CHC-5H

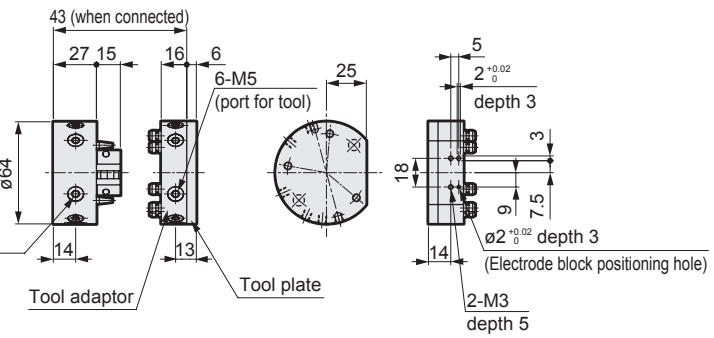

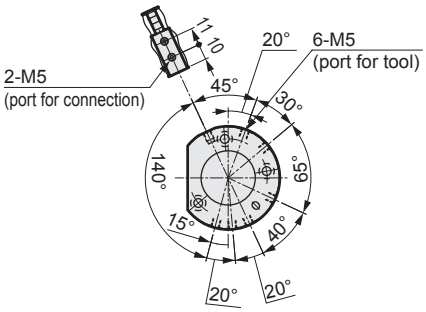

Piping port layout drawing (A section arrow view)

Tool plate diagram

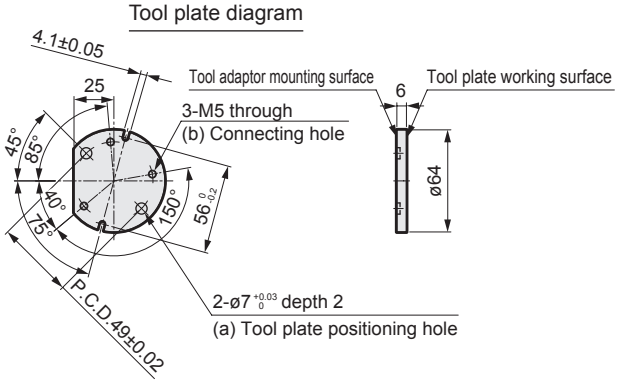

Note: If attaching a hand to the tool adaptor side, remove the tool plate and modify the tool plate working surface before attaching the hand. Avoid machining on (a) tool plate positioning hole and (b) connecting hole. If mounting on a different tool plate, drill (a) and (b) holes on the plate.

Dimensions with options

● With electrode block

·Body side CHC-5R-D1

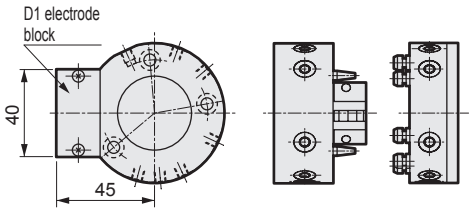

· Tool adaptor side CHC-5H-D

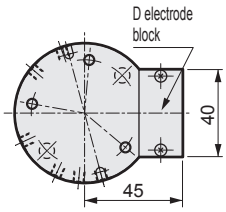

● With check valve CHC-5R-B

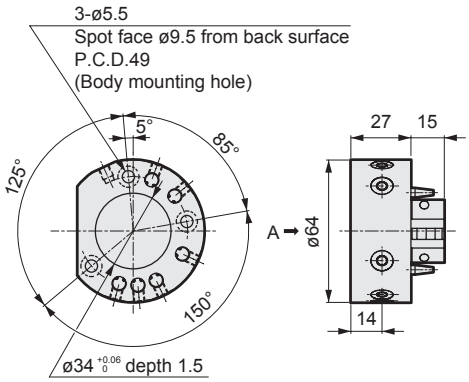

● With electrode block + D sub-connector (socket)

·Body side CHC-5R-D3

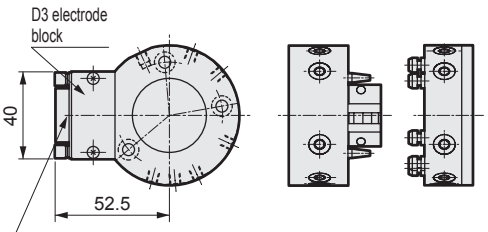

· Tool adaptor side CHC-5H-D3

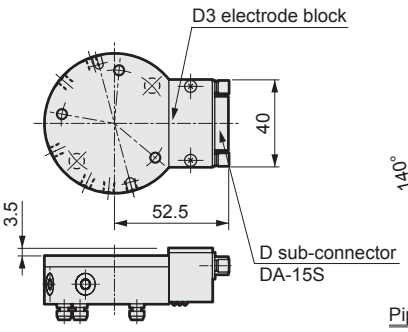

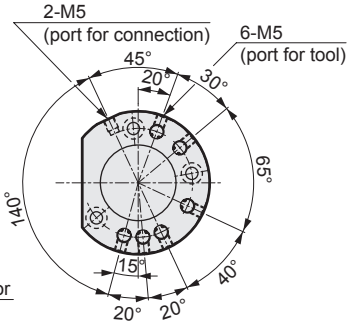

Piping port layout drawing (A section arrow view)

Dimensions (CHC-10)

● CHC-10

· Body side CHC-10R

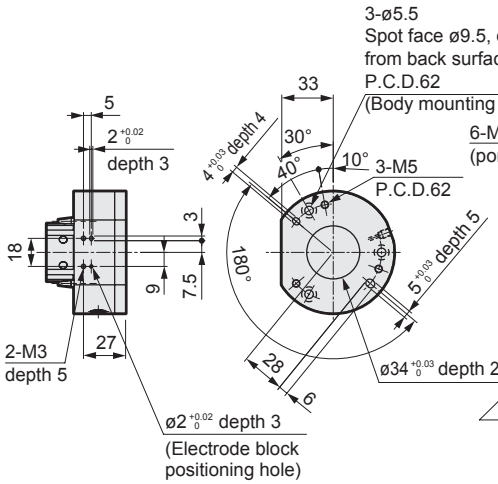

· Tool adaptor side CHC-10H

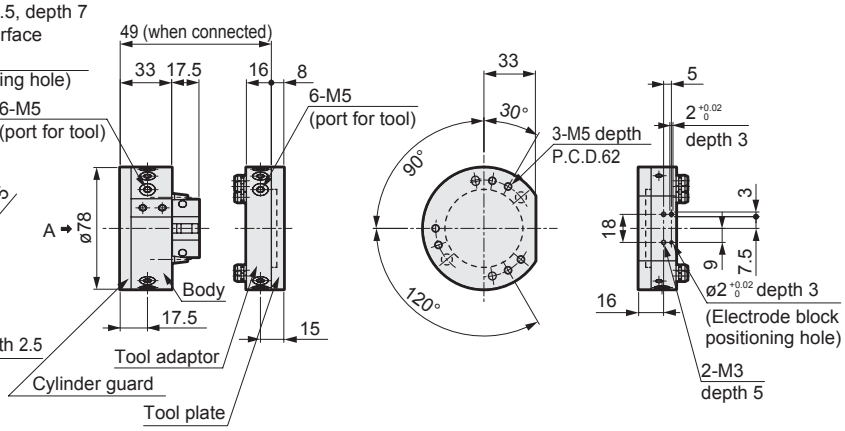

Tool plate diagram

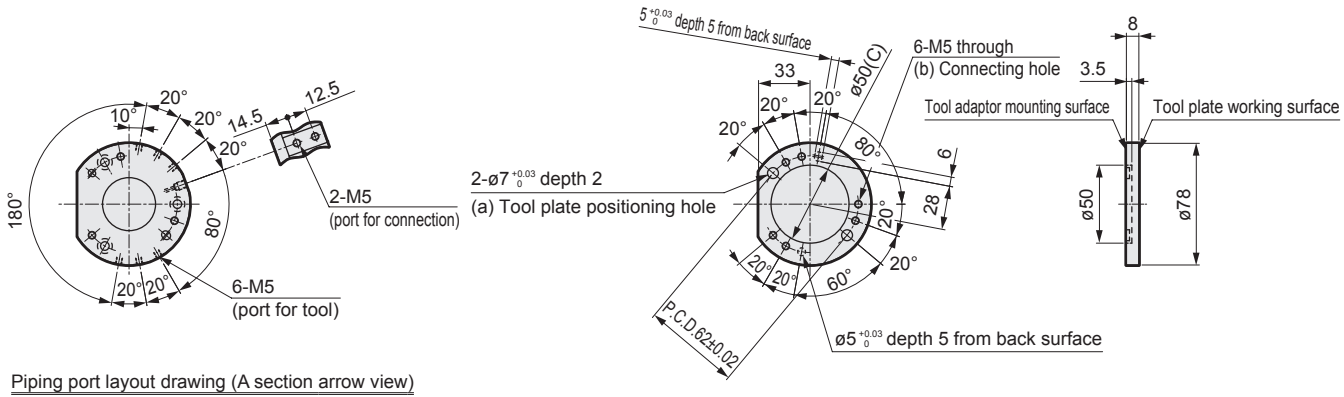

Piping port layout drawing (A section arrow view)

Note: If attaching a hand to the tool adaptor side, remove the tool plate and modify the tool plate working surface before attaching the hand. Avoid machining on (a) tool plate positioning hole and (b) connecting hole. In addition, (c) is a necessary space for operation of the arm when the body side grasps the tool adaptor unit. If mounting on a different tool plate, drill (a), (b) and (c) holes on the plate.

Dimensions with options

● With electrode block

·Body side CHC-10R-D1

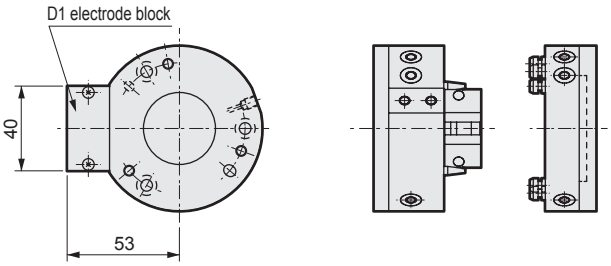

· Tool adaptor side CHC-10H-D

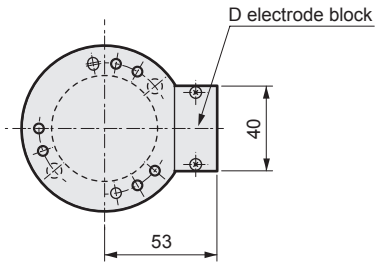

● With electrode block + D sub-connector (socket)

·Body side CHC-10R-D3

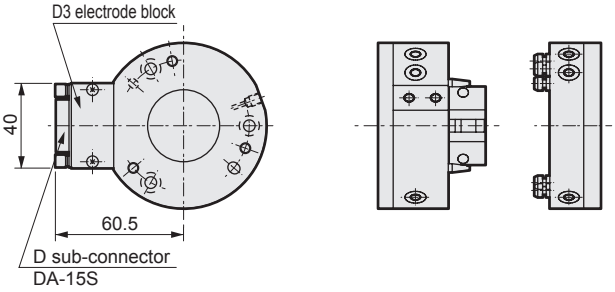

· Tool adaptor side CHC-10H-D3

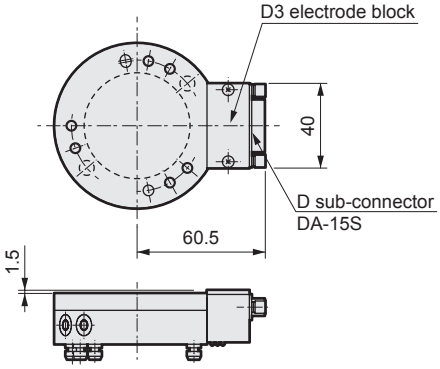

Note: CHC-10-B (with check valve) is the same as the basic.

LCM
LCR
LCG
LCW
LCX
STM
STG
STS/STL
STR2
UCA2
ULK*
JSK/M2
JSG
JSC3/JSC4
USSD
UFCD
USC
UB
JSB3
LMB
LML
HCM
HCA
LBC
CAC4
UCAC2
CAC-N
UCAC-N
RCS2
RCC2
PCC
SHC
MCP
GLC
MFC
BBS
RRC
GRC
RV3*
NHS
HRL
LN
Hand
Chuk
MecHnd/Chuk
ShkAbs
FJ
FK
SpdContr
Ending
CKL2
CKLG2
CKL2-HC
CKH2
CKLB2
CKG
CK
CKA
CKS
CKS-F
CKF
CKJ
CHC

Dimensions (CHC-20)

CAD

● CHC-20

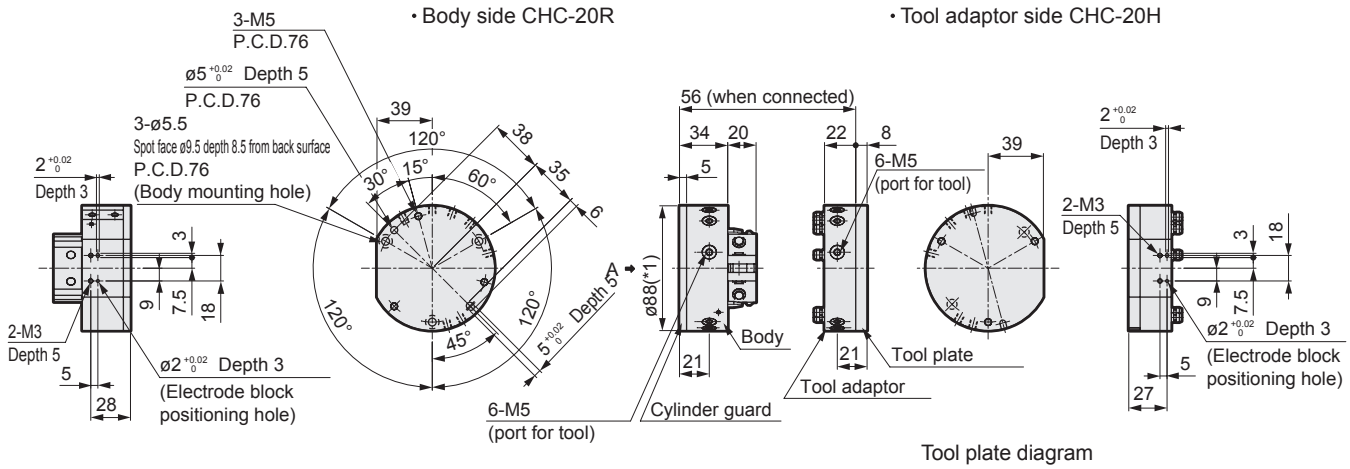

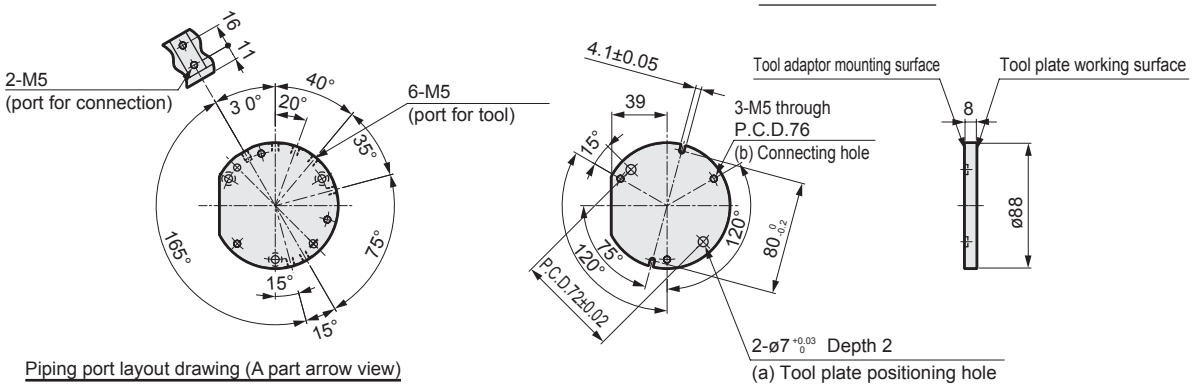

*1: ø88 for cylinder cover only 0 -0.1

*2: If attaching a hand to the tool adaptor side, remove the tool plate and machine the tool plate application surface before attaching the hand. Avoid machining on (a) tool plate positioning hole and (b) connecting hole. If mounting on a different tool plate, drill (a) and (b) holes on the plate.

Optional dimensions

● With electrode block

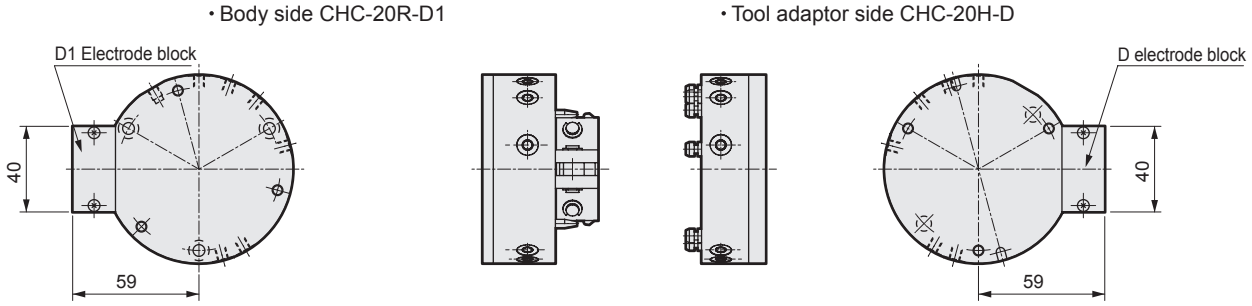

● D-sub-connector with electrode block (socket)

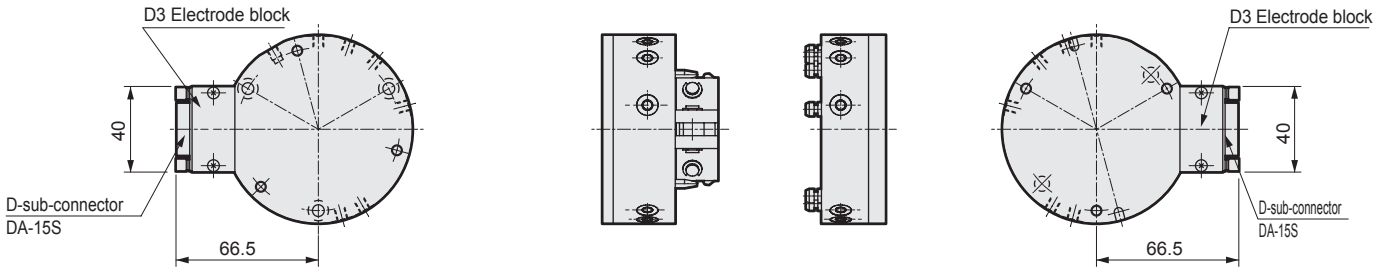

Note: CHC-20-B (with check valve) is the same as the basic type.

Positioning (between customer's machine and body side, between tool adaptor side and customer's temporary jig)

Body side		
CHC-1 CHC-5 CHC-10	**CHC-20**	**Applications**
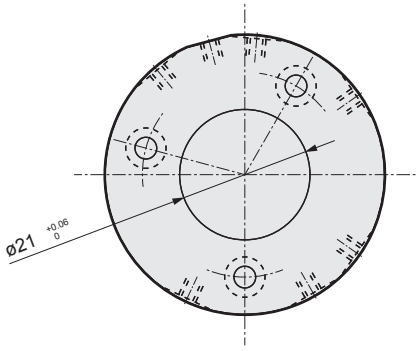	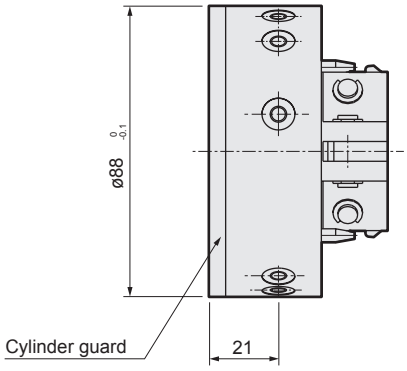	
Position with the ø21 $^{+0.06}_{0}$ spigot shown in the figure. (The above figure is for CHC-1.)	Position with the circumference of ø88 $^{0}_{-0.1}$ shown in the figure.	Referring to the positions in the figure at left, mount on the main body.

Tool adaptor side		
CHC-1 CHC-5 CHC-20	**CHC-10**	**Applications**
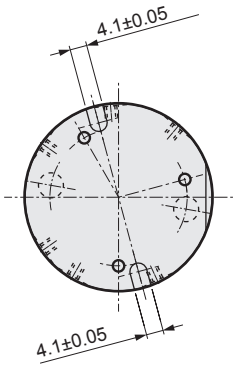	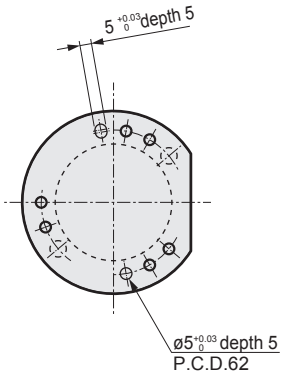	
Position with the ø4.1 ± 0.05 cutout shown in the figure. (The above figure is for CHC-1.)	Position with a slot ø5 $^{+0.03}_{0}$ depth 5 and ø5 $^{+0.03}_{0}$ depth 5P.C.D62 shown in the figure.	Prepare positioning pins on the temporary base and position with the holes of the tool adaptor side shown in the figure at left.

Applications

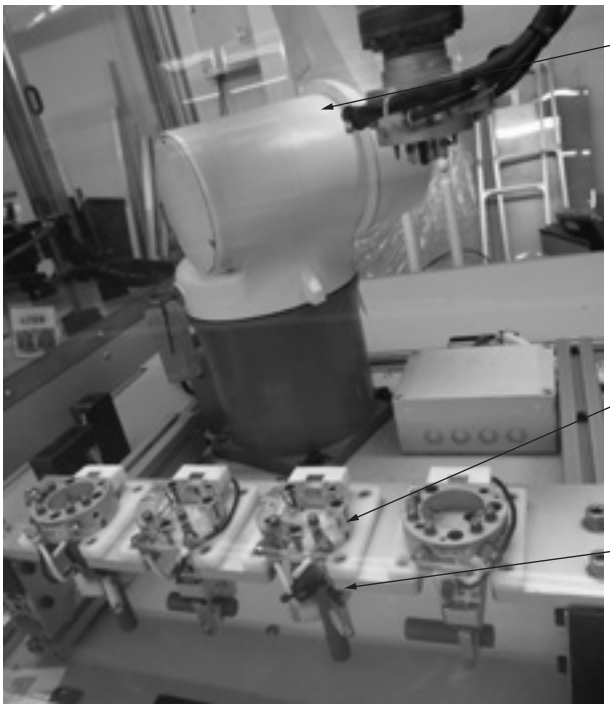

Safety Precautions

Be sure to read this section before use.

Refer to Intro Page 73 for general information of the cylinder, and to Intro Page 80 for general information of the cylinder switch.

Product-specific cautions: Auto hand changer CHC Series

Design/selection

⚠ CAUTION

■ Port piping for body side connection

The spring is for position locking and cannot be used to support external force. When external force is applied while connected, such as during equipment operation, supply air to the connection port for use.

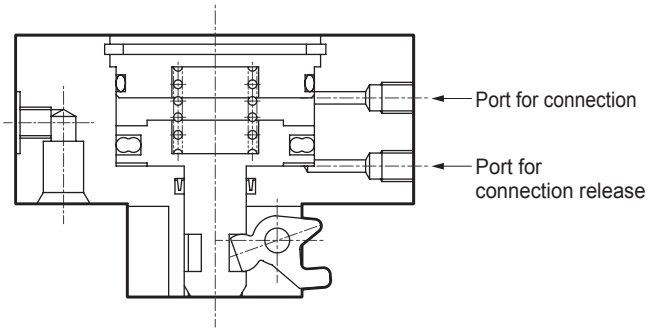

■ Compressed air supply to tool port

Because the tool port is open, use a directional control valve with 3-position all ports closed specifications.
Do not supply compressed air when disassembled.

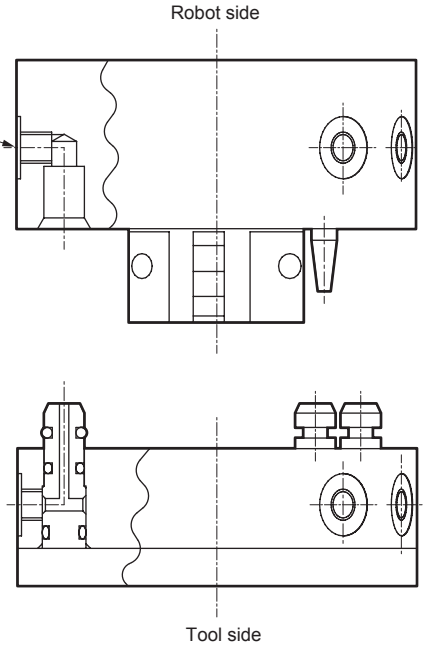

■ Connection method

Ensure a clearance of 1 mm between the robot side and tool side. When air is supplied, the arm retracts the tool side, diminishing this 1 mm clearance.

With clearance of 1 mm or less, the robot side will come into contact with the tool-side pusher section.

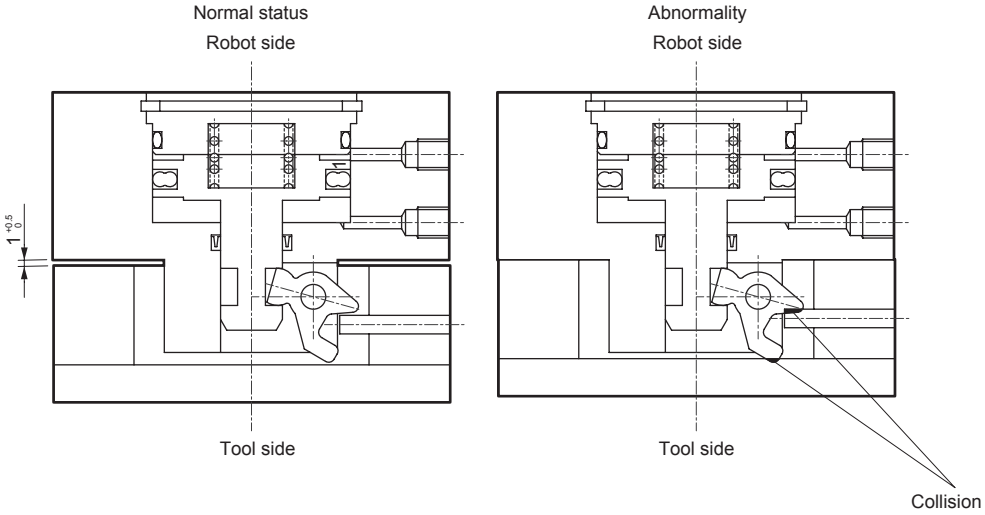

Mechanical hand/chuck

Overview

Mechanical hand/chuck BHA-FC, CKL2-FC series, unlike the conventional hand/chuck that requires air, performs opening and closing operation mechanically.
It is ideal for systems that require terminal opening and closing operation, such as the shuttle mover (SM-25 Series).

Features

- Ideal for index tables, etc., that cannot use air piping.
- Closed direction has higher gripping power due to spring. (BHA: 12N to 100N CKL2: 20N to 150N)
- Since the opening direction is driven by external force, it is capable of high-speed operation combined with a cam, etc.

CONTENTS

- Mechanical hand (BHA-FC) 1884
- Mechanical chuck (CKL2-FC) 1886

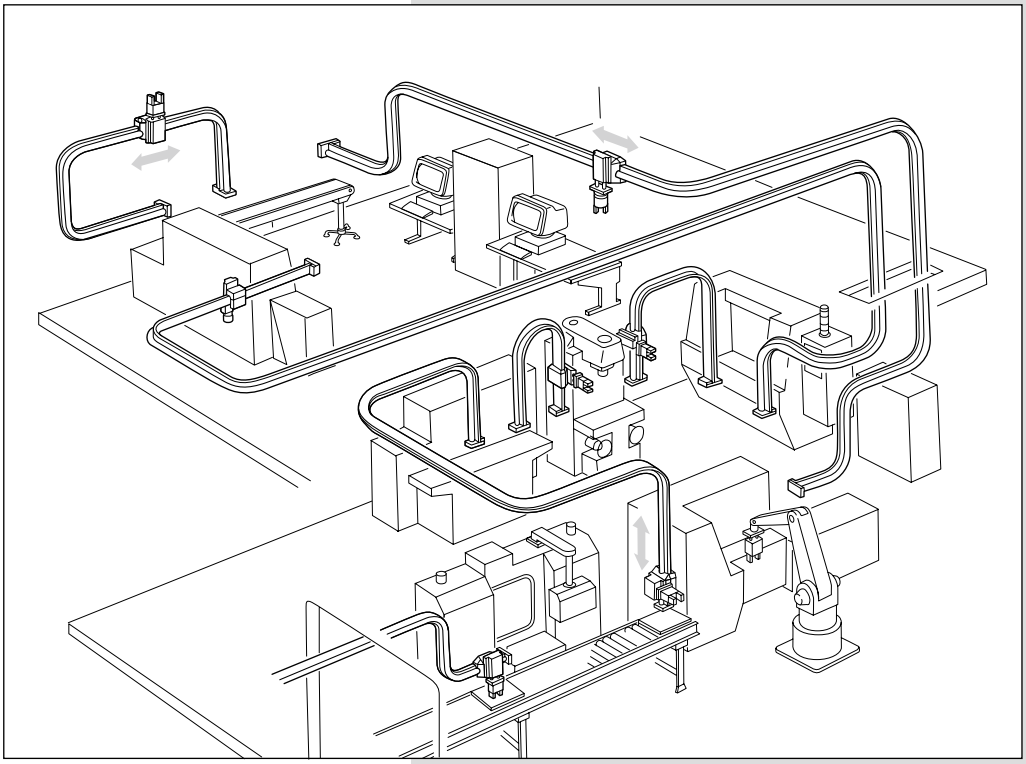

⚠ For your safety, refer to precautions for general cylinders on Intro Page 73, for hand on page 1764 and for chuck on page 1872.

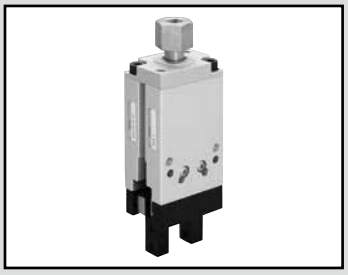

Mechanical hand

BHA-FC Series

● Operating stroke length: 5, 9, 11, 15, 20 mm

RoHS CAD

Specifications

Model No.	BHA-FC				
Size	01CS	03CS	04CS	05CS	06CS
Cylinder bore size mm	ø12	ø16	ø20	ø25	ø32
Rod diameter mm	ø6	ø8	ø10	ø12	ø16
Ambient temperature °C	5 (41°F) to 60 (140°F)				
Operating stroke length mm	5	9	11	15	20
Repeatability mm	±0.01				
Open side external force N	60 to 90	120 to 180	185 to 280	230 to 350	400 to 600
Gripping power (*3) N	12 to 19	20 to 37	20 to 55	45 to 75	70 to 100
Product weight g	142	212	362	594	1342

*1 : Never use in the open direction, as the hand may be damaged.
*2 : The internal piston, etc. may be damaged when torque is applied to the stopper rod.
When connecting with the device, be sure to connect by securing the stopper rod with a wrench.
*3 : Gripping power varies with stroke position.

How to order

BHA - 01CS - FC

Ⓐ Size

Code
Ⓐ Size
01CS
03CS
04CS
05CS
06CS

Internal structure and parts list

● BHA-FC

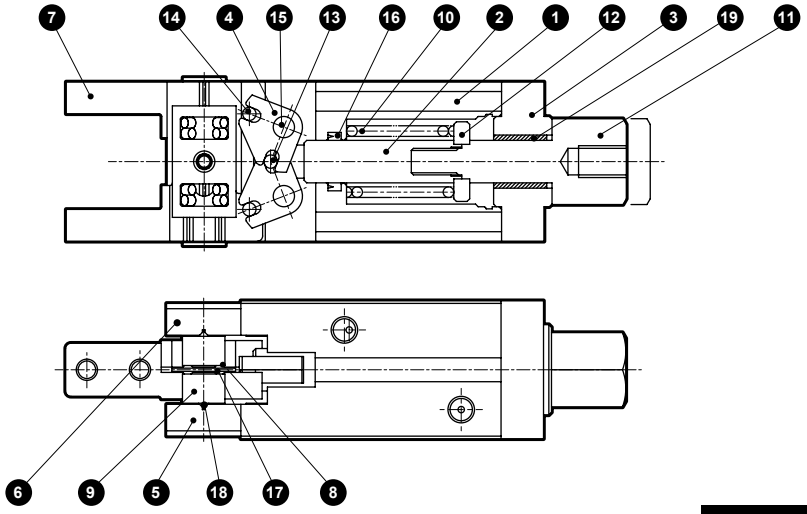

Cannot be disassembled

No.	Part name	Material	No.	Part name	Material
1	Body		11	FC stopper rod	Stainless steel
2	FC piston rod	Stainless steel	12	FC washer	Stainless steel
3	FC cylinder guard	Aluminum alloy	13	Fulcrum axis	Steel
4	Arm	Stainless steel	14	Operation shaft A	Alloy steel
5	Bearing guide A	Steel	15	Operation shaft B	Alloy steel
6	Bearing guide B	Steel	16	Lot sealant	Nitrile rubber
7	Finger	Steel	17	Cross roller A	Alloy steel
8	Retainer A	Stainless steel	18	Cross roller B	Alloy steel
9	Retainer B	Stainless steel	19	Bush	Oil impregnated bearing alloy
10	Spring	Stainless steel			

Dimensions

● BHA-FC

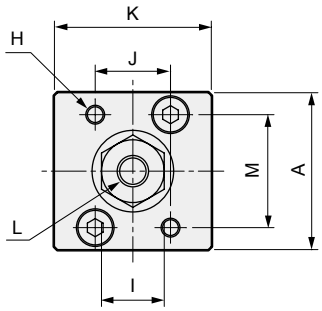

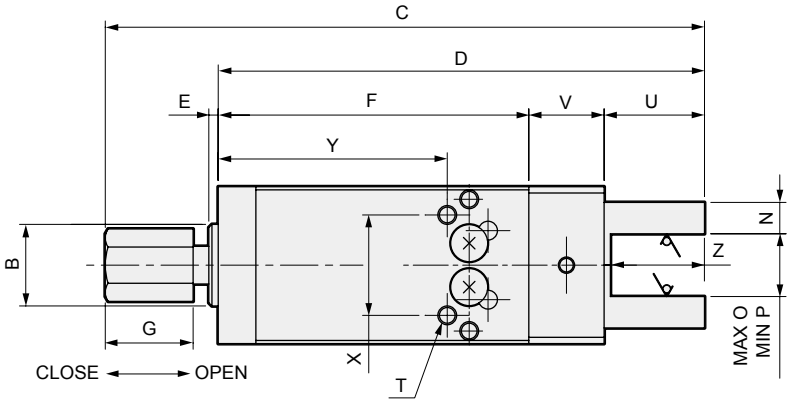

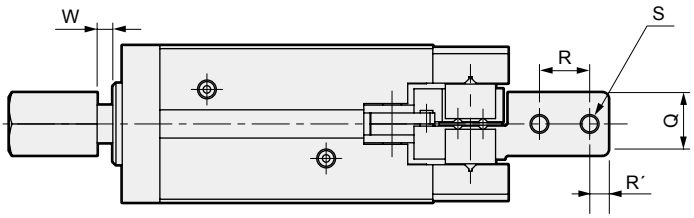

Code / Model No.	A	B	C	D	E	F	G	H	I	J	K	L	M
BHA-01CS-FC	25	ø13	MAX95.5/MIN93	77.5	1.5	49.5	14	2-M3 × 0.5 depth 6	10	12	25	M5 × 0.8 depth 8	18
BHA-03CS-FC	30	ø17	MAX110/MIN105.5	90	1.5	57	14	2-M4 × 0.7 depth 8	14	15	26	M6 × 1.0 depth 9	22
BHA-04CS-FC	41	ø21	MAX120/MIN114.5	99	1.5	67	14	2-M5 × 0.8 depth 8	17	18	30	M8 × 1.25 depth 10	32
BHA-05CS-FC	50	ø26	MAX148/MIN140.5	123	1.5	88	16	2-M6 × 1.0 depth 12	19	22	35	M8 × 1.25 depth 12	40
BHA-06CS-FC	60	ø34	MAX199/MIN189	171	2	114	16	2-M6 × 1.0 depth 12	24	32	47	M10 × 1.5 depth 15	44

Code / Model No.	N	O	P	Q	R	S	T	U	V	W	X	Y	Z	R´
BHA-01CS-FC	5	15	10	$10^{0}_{-0.05}$	8	2×2-M3×0.5	2 x 2-M3 x 0.5 depth 7	16	12	2.5	16	36.5	15	3
BHA-03CS-FC	6	18	9	$10^{0}_{-0.05}$	10	2×2-M4×0.7	2 x 2-M4 x 0.7 depth 7	19	14	4.5	24	43	18	4
BHA-04CS-FC	8	25	14	$10^{0}_{-0.05}$	10	2×2-M4×0.7	2 x 2-M5 x 0.8 depth 8	19	13	5.5	30	46	18	4
BHA-05CS-FC	10	30	15	$10^{0}_{-0.05}$	10	2×2-M5×0.8	2 x 2-M6 x 1.0 depth 10	22	13	7.5	36	61	21	5
BHA-06CS-FC	10	40	20	$16^{0}_{-0.05}$	18	2×2-M5×0.8	2 x 2-M8 x 1.25 depth 14	36	21	10	44	77	33	5

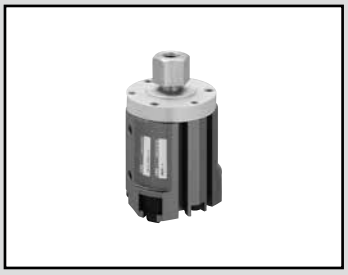

Mechanical chuck

CKL2-FC Series

● Operating stroke length: 5, 6, 8, 10mm

RoHS CAD

Specifications

● CKL2-FC

Model No.	CKL2-FC			
Size	20CS	25CS	32CS	40CS
Cylinder bore size mm	ø20	ø25	ø32	ø40
Rod diameter mm	ø6	ø8	ø10	ø12
Ambient temperature °C	5 (41°F) to 60 (140°F)			
Operating stroke length mm	5	6	8	10
Repeatability mm	±0.01			
Open side external force N	165 to 250	280 to 420	485 to 730	710 to 1050
Gripping power (*2) N	20 to 33	33 to 53	50 to 105	83 to 150
Product weight g	202	320	433	834

*1 : Never use in the open direction, as the hand may be damaged.
*2 : Gripping power varies with stroke position.

How to order

CKL2 - 20CS - FC

Ⓐ Size

Code
Ⓐ Size
20CS
25CS
32CS
40CS

Internal structure and parts list

● CKL2-FC

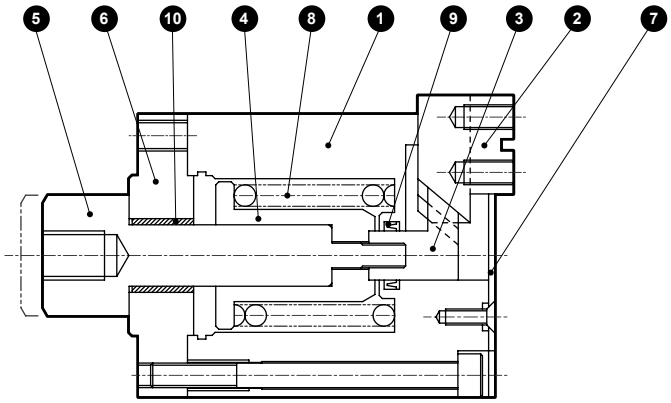

Cannot be disassembled

No.	Part name	Material	No.	Part name	Material
1	Body	Aluminum alloy	6	FC cylinder guard	Aluminum alloy
2	Finger	Steel	7	Center guard	Stainless steel
3	Piston A	20CS to 32CS : Stainless steel 40CS : Steel	8	Spring	Stainless steel
4	FC piston	Aluminum alloy	9	Lot sealant	Nitrile rubber
5	FC stopper rod	Stainless steel	10	Bush	Oil impregnated bearing alloy

Dimensions

● CKL2-FC

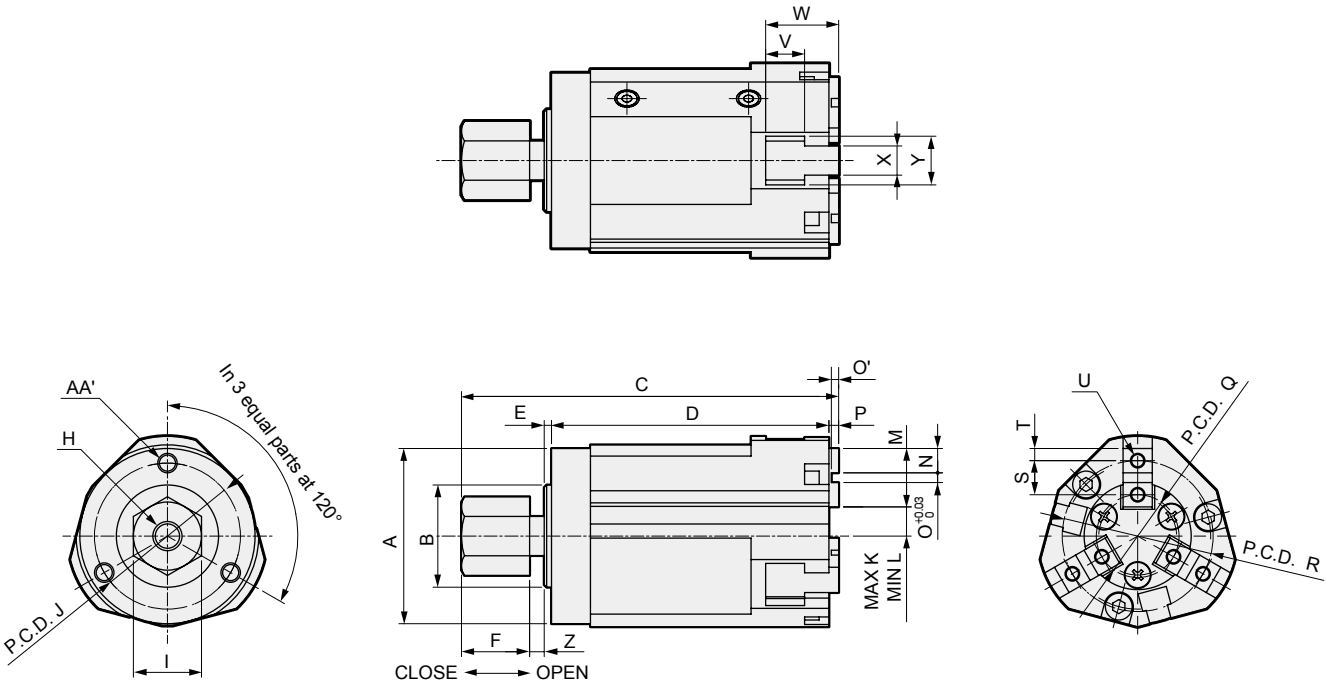

Code / Model No.	A	AA'	B	C	D	E	F	H	I	J	K	L
CKL2-20CS-FC	ø36	3-M4 × 0.7 depth 8	ø21 $^{0}_{-0.052}$	MAX77.5/MIN74.5	57	1.5	14	M6 × 1.0 depth 9	14	30	8.5	6
CKL2-25CS-FC	ø46	3-M5 × 0.8 depth 8	ø26 $^{0}_{-0.052}$	MAX80.1/MIN76.5	58	1.5	14	M8 × 1.25 depth 10	17	39	10	7
CKL2-32CS-FC	ø52	3-M5 × 0.8 depth 10	ø34 $^{0}_{-0.062}$	MAX93/MIN88	67	2	16	M8 × 1.25 depth 12	19	44	12	8
CKL2-40CS-FC	ø62	3-M6 × 1.0 depth 12	ø42 $^{0}_{-0.062}$	MAX118/MIN111.5	90.5	2	16	M10 × 1.5 depth 15	24	53	15	10

Code / Model No.	M	N	O	P	Q	R	S	T	U	V	W	X	Y	Z	O'
CKL2-20CS-FC	12	5	2	2	17	31	7	2.5	3 x 2-M3 x 0.5 depth 6	8	15	6 $^{0}_{-0.012}$	10	3	1.5
CKL2-25CS-FC	16	7	2	3	21	39	9	3.5	3 x 2-M4 x 0.7 depth 8	8.5	15.5	7 $^{0}_{-0.015}$	12	3.6	2
CKL2-32CS-FC	18	7.5	3	3	24	44	10	4	3 x 2-M4 x 0.7 depth 8	4	14.5	8 $^{0}_{-0.015}$	14	5	2
CKL2-40CS-FC	21	9	3	3	29	53	12	4.5	3 x 2-M5 x 0.8 depth 10	5	15	8 $^{0}_{-0.015}$	16	6.5	2.5

Related products

	Page
Shock absorber **SKL, NCK, SCK, FCK** Series	1891
Floating fitting **FJ** Series	1945
Simplified floating fitting **FK** Series	1955
Speed controller	1961

SKL/NCK/SCK/FCK

Shock absorber

Related products

CONTENTS

Shock absorber product map 1892
● Shock absorber/fixed (SKL) 1893
● Shock absorber/fixed (NCK) 1901
● Shock absorber/adjustable (SCK) 1913
● Shock absorber/adjustable (FCK) 1921
⚠ Safety precautions 1941

●: Standard, ◎: Option, ○: Made to order, ▒: Not available

Type	Model No.		Max. colliding speed working range m/s	Max. energy absorption (J) 5 10 50 100 500 1000	Mounting: Basic 00	Mounting: Flange FA	Option: With stop nut N1	Option: Capped C	Option: Deflection angle adaptor	Page
Fixed	SKL		to 1.0	0.2 3.6						1893
Fixed	NCK		to 3.0	1 200	●	◎	◎	◎		1901
Adjustable	SCK		to 4.0	0.049 588	●	◎	◎			1913
Adjustable	FCK	Low speed	to 1	1.5 720	●		◎	◎	◎	1921
Adjustable	FCK	Medium speed	to 2		●		◎	◎	◎	
Adjustable	FCK	High speed	to 3		●		◎	◎	◎	

Shock absorber product map

◎: Excellent ○: Good △: Average

		SKL	NCK	SCK	FCK		
					L (low speed)	M (medium speed)	H (high speed)
Working speed	Low speed (to 1m/s)	◎	◎	△	◎		
	Medium speed (1 to 2 m/s)		◎	△		◎	
	High speed (from 2 m/s)		△	◎			◎
Working conditions	Simultaneous use of thrust force	◎	◎	△	△	◎	△
	Free fall (high speed collision)	△	△	◎	△	○	○
Size/structure	Size	Small	Small	Large	Medium	Medium	Medium
	Adjuster adjustment	Fixed	Fixed	Adjustable (fixed)	Adjustable		
	Orifice	Slit orifice	Slit orifice	Balance valve	Single hole orifice	Porous irregular orifice	Porous orifice
		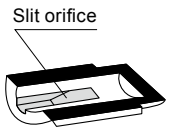	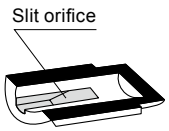	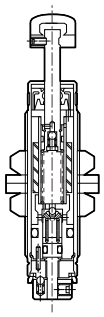	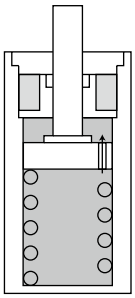	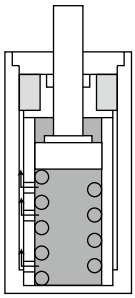	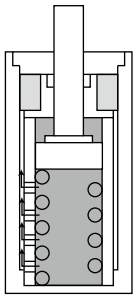
	Tube	Single	Single	Double	Single/double	Double	Double
Energy absorption characteristics	Relation of stroke length (S) and resistance (F)	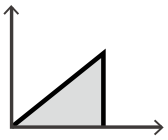	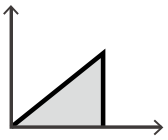	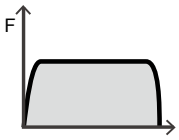	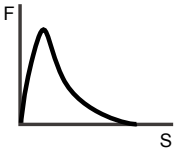	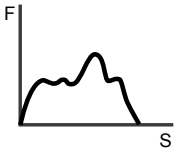	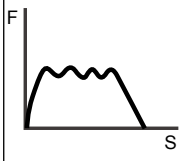
	Operation characteristics	The slit orifice matched to the linear slide cylinder enables lower tact times and smooth stopping performance.	The slit orifice enables smooth stop performance. With the triangle waveform, the speed gradually decreases while energy is absorbed.	Trapezoidal waveform, with the most efficient energy absorption.	Since the orifice area is constant throughout the full stroke, resistance increases immediately after collision, and decreases as the stroke advances and speed declines.	This type is designed so that the kinetic energy is absorbed in the first half of the stroke and the speed is controlled in the second half. Energy is absorbed ideally for cylinder thrust.	The orifice area gradually decreases as the stroke advances and speed slows down. Resistance thus fluctuates in a wave, but max. resistance is suppressed at a low level.

SKL

Shock absorber/fixed

Related products

Overview

Maximization of the installation capacity with lower tact times, long service life.
A shock absorber that achieves smooth stoppage.

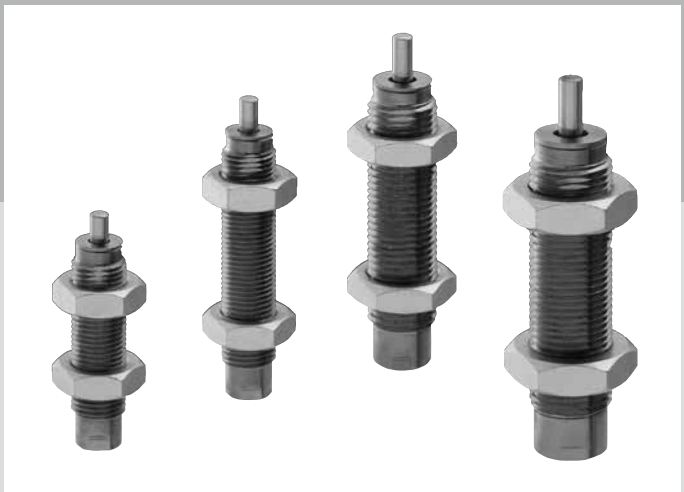

CONTENTS

Series variation	1891
Product introduction	1894
● SKL (Max. absorbed energy: 0.2 to 3.6 J)	1896
Selection guide	1898
⚠ Safety precautions	1941

Improves equipment tact time and contributes to increased productivity!

Linear slide cylinder

Built into LCR and LCG for optimization.

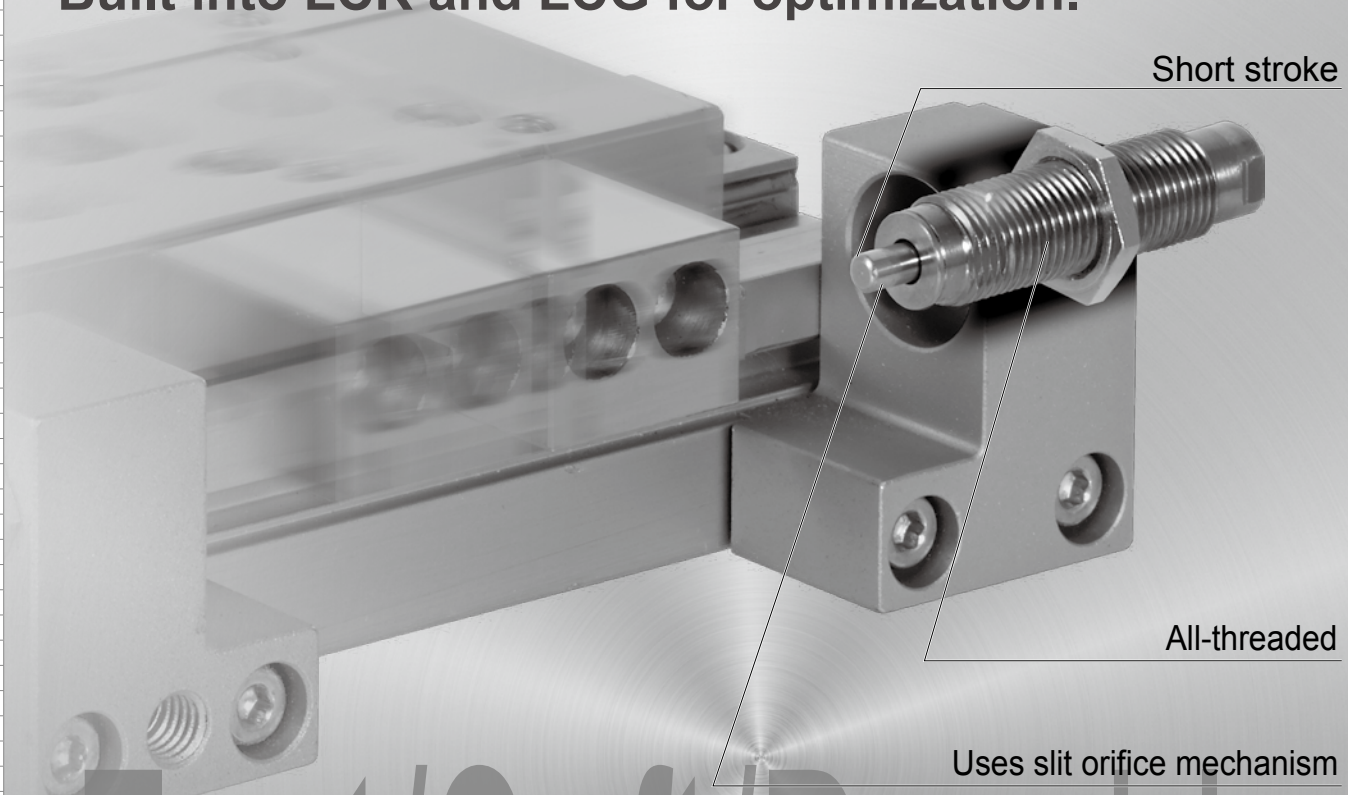

Fast/Soft/Durable

Shock absorber for linear slide cylinder

SKL Series

Model variations Four types are available, matching the maximum absorbed energy suited to each linear slide cylinder.

Model variations		Thread size	Stroke length (mm)
SKL Series	SKL-0804	M8×0.75	3.5
	SKL-0805		4.5
	SKL-1006	M10×1.0	6
	SKL-1208	M12×1.0	8

Absorbed energy (J)

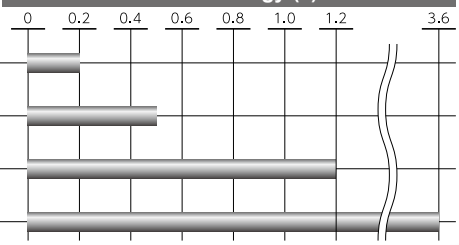

Fast tact

Short stroke dramatically reduces operating time

Compatible with low tact/high-accuracy linear slide cylinder. Reduces equipment operating time and contributes to increased productivity.

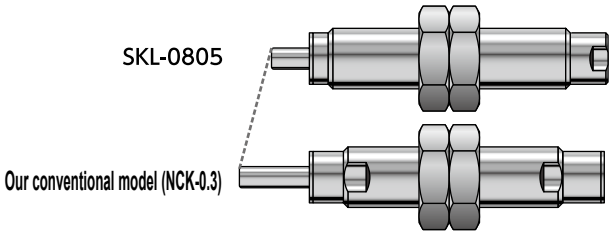

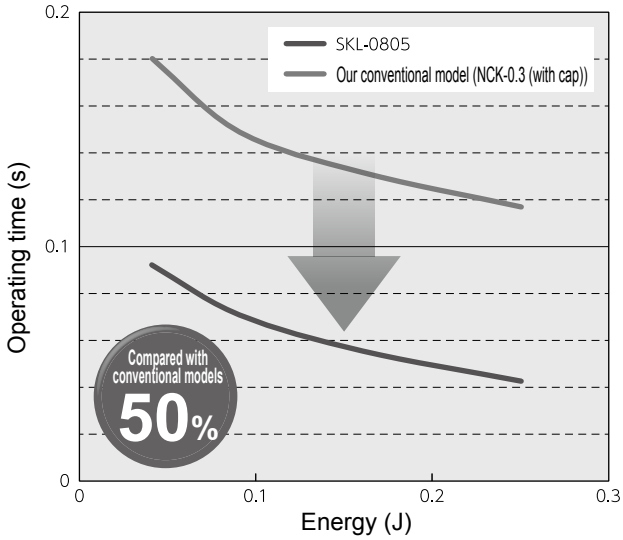

* Data are reference values at cylinder thrust 60 N, room temperature.
Operating time varies according to collision conditions.

Soft stop extends service life

Slit orifice mechanism enables smooth impact absorption characteristics

Uses a slit orifice mechanism in which the orifice surface area smoothly decreases as the piston moves. Realizes an ideal triangular waveform, gentle impacts with soft absorption characteristics.

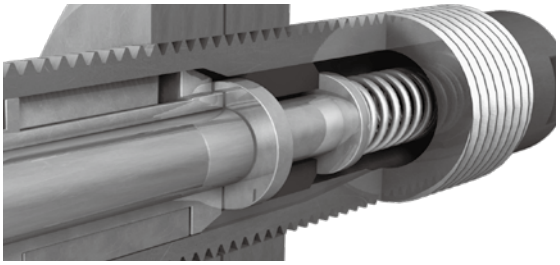

Slit orifice mechanism realizes long service life
The well-regarded slit orifice mechanism has been retained and optimized through specialization for linear slide cylinders.

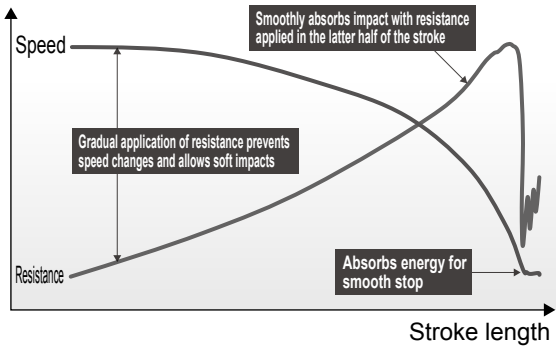

Gradual speed change enables soft stop

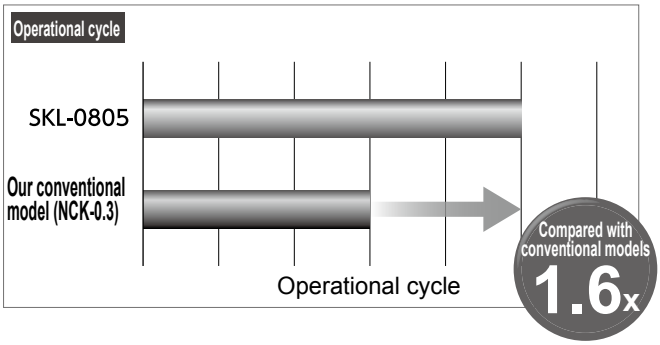

High maintainability

Easy capless mounting

Structure directly receives the slider with the body. Capless and mountable from rod side, allowing shock absorber replacement with the linear slide cylinder still installed.

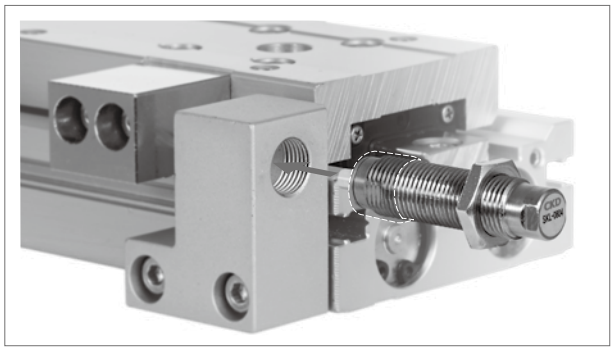

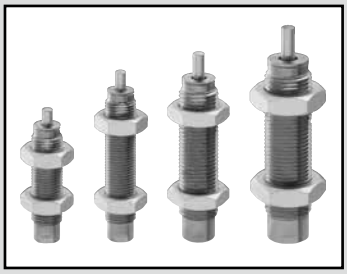

Shock absorber

SKL Series

● Max. energy absorption: 0.2 to 3.6J

RoHS

Specifications

Item			SKL			
Model No.			SKL-0804	SKL-0805	SKL-1006	SKL-1208
Max. energy absorption		J	0.2	0.5	1.2	3.6
O.D. thread size		mm	M8×0.75		M10×1.0	M12×1.0
Stroke length		mm	3.5	4.5	6	8
Max. absorbed energy per hour		kJ/hr	0.9	2.4	4.3	12.9
Max. colliding speed		m/s	1.0			
Max. operating frequency		Cycle/min.	80		60	
Ambient temperature		°C	-10 (14°F) to 60 (140°F)			
Max. allowable thrust		N	40	158	281	687
Max. load (rated resistance)		N	152	277	484	1064
Required mounting strength		N	456	831	1452	3192
Return time		s	0.3 or less			
Weight		g	9	12	20	40
Return	When extended	N	3.3	3.3	2.3	3.4
Spring force	When compressed	N	4.6	4.6	4.2	5.9

Note: The speed and absorption capacity of the shock absorber vary depending on the ambient temperature.
Values given in the above specifications are for room temperature.

How to order

SKL - 08 05

Model No.

Ⓐ Thread size

Ⓑ Stroke length

Code	Description
Ⓐ Thread size	
08	M8×0.75
10	M10×1.0
12	M12×1.0

Ⓑ Stroke length (mm)				
	Thread size	**08**	**10**	**12**
04	3.5 mm	●		
05	4.5 mm	●		
06	6 mm		●	
08	8 mm			●

LCM
LCR
LCG
LCW
LCX
STM
STG
STS/STL
STR2
UCA2
ULK*
JSK/M2
JSG
JSC3/JSC4
USSD
UFCD
USC
UB
JSB3
LMB
LML
HCM
HCA
LBC
CAC4
UCAC2
CAC-N
UCAC-N
RCS2
RCC2
PCC
SHC
MCP
GLC
MFC
BBS
RRC
GRC
RV3*
NHS
HRL
LN
Hand
Chuk
MecHnd/Chuk
ShkAbs
FJ
FK
SpdContr
Ending

Internal structure and parts list

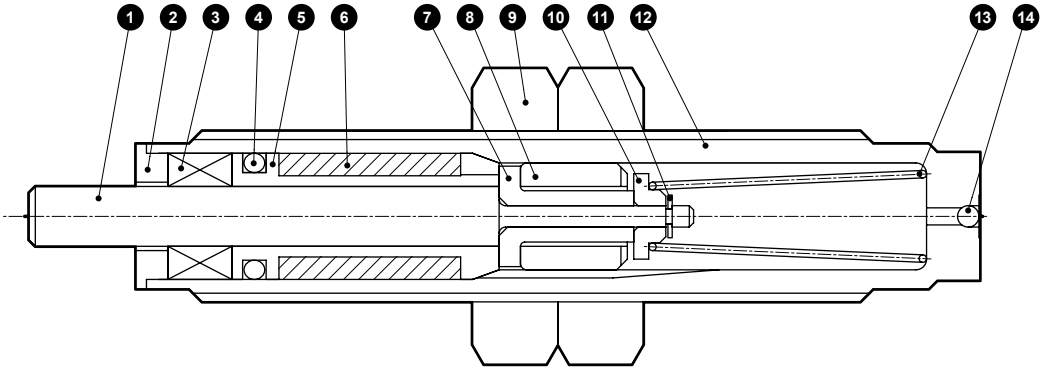

Cannot be disassembled

Parts list

No.	Part name	Material	Remarks	No.	Part name	Material	Remarks
1	Piston rod	Steel	Industrial chrome plating	8	Piston	Cast iron	
2	Cover	Stainless steel		9	Hexagon nut	Steel	Zinc plated
3	Oil seal	Special nitrile rubber		10	Valve stopper	Steel	
4	O-ring	Nitrile rubber		11	E type snap ring	Stainless steel	
5	Rod guide	Aluminum alloy		12	Damper case	Steel	Nickel plating
6	Air chamber	Nitrile rubber		13	Spring	Piano wire	
7	Valve	Steel		14	Steel ball	Steel	

Dimensions

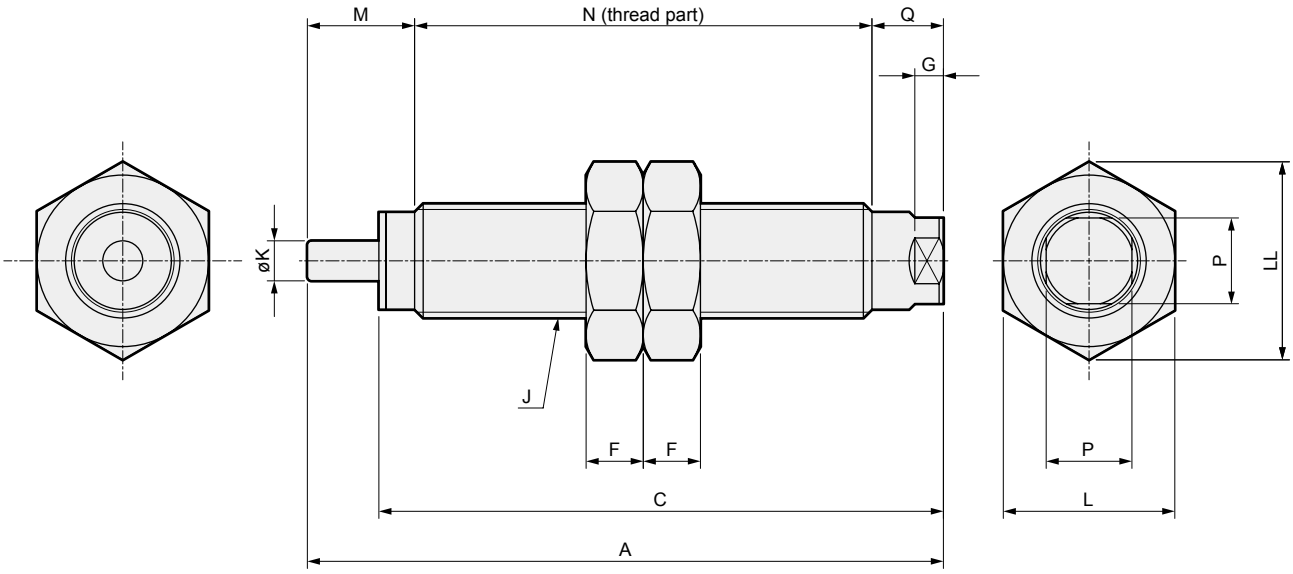

Model No.	A	C	F	G	J	K	L	LL	M	N	P	Q
SKL-0804	34.5	30.5	4	2	M8×0.75	2.8	12	13.9	6.5	23	6	5
SKL-0805	44.5	39.5	4	2	M8×0.75	2.8	12	13.9	7.5	32	6	5
SKL-1006	49	42.5	4	2	M10×1.0	3	14	16.2	9	34	8	6
SKL-1208	56	47.5	5	2	M12×1.0	3.5	17	19.6	12	37	10	7

LCM
LCR
LCG
LCW
LCX
STM
STG
STS/STL
STR2
UCA2
ULK*
JSK/M2
JSG
JSC3/JSC4
USSD
UFCD
USC
UB
JSB3
LMB
LML
HCM
HCA
LBC
CAC4
UCAC2
CAC-N
UCAC-N
RCS2
RCC2
PCC
SHC
MCP
GLC
MFC
BBS
RRC
GRC
RV3*
NHS
HRL
LN
Hand
Chuk
MecHnd/Chuk
ShkAbs
FJ
FK
SpdContr
Ending

Shock absorber selection guide

1 Clarify the colliding pattern of the device

Horizontal motion
- a. Simple horizontal collision
- b. Collision with cylinder thrust
- c. Collision with drive force of motor

Vertical motion
- d. Collision due to free fall
- e. Collision with cylinder thrust (downward)
- f. Collision with cylinder thrust (upward)

Slope motion
- g. Collision due to free sliding
- h. Collision with cylinder thrust (downward)
- i. Collision with cylinder thrust (upward)

Oscillation Rotation motion
- j. Collision due to free oscillating fall
- k. Colliding with torque of motor, etc., (oscillation)
- l. Colliding with torque of motor, etc., (rotation)

Note: Refer to "Example of colliding pattern".

2 Make required conditions/descriptions clear to calculate energy

E = all absorbed energy (J)
E_1 = kinetic energy (J)
E_2 = thrust/self-weight energy (J)

L = colliding object travel distance (m)
(Slope free fall)
R = distance from center of rotation to colliding point (m)
r = distance from center of rotation to center of gravity (m)
G = position of center of gravity

M = colliding weight (kg)
V = colliding speed (m/s)
S = SKL stroke length (m)
F = pushing force (N)
g = gravity acceleration 9.8 m/s²
ω = angular speed (rad/s)
J = moment of inertia (kg/m²)
D = diameter (m)
N = number of rotations (rpm)
Me = equivalent weight (kg)

H = drop height (m)
T = torque (N·m)
Td = motor start torque (N·m)
K = reduction ratio
θ, α, β = tilt angle (deg)

3 Calculate actual energy in accordance with the sample figure for the colliding pattern

	Horizontal colliding			Vertical colliding		
	a. Simple horizontal collision	b. Pushing force of cylinder applies	c. Pushing force of motor applies	d. Free fall	e. Cylinder lower limit stopper	f. Cylinder upper limit stopper
Applications	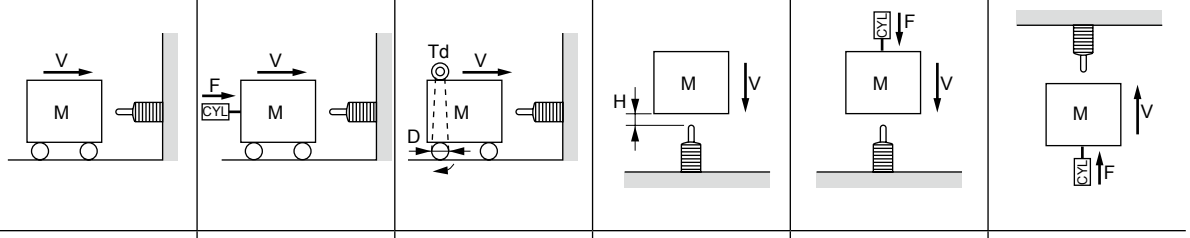					
Kinetic energy E_1(J)	$\frac{1}{2}\cdot M\cdot V^2$	$\frac{1}{2}\cdot M\cdot V^2$	$\frac{1}{2}\cdot M\cdot V^2$	$\frac{1}{2}\cdot M\cdot V^2$	$\frac{1}{2}\cdot M\cdot V^2$	$\frac{1}{2}\cdot M\cdot V^2$
Thrust/self-weight energy E_2(J)	-------	$F\cdot S$	$2\cdot\frac{K}{D}\cdot Td\cdot S$	$M\cdot g\cdot S$	$(M\cdot g+F)\cdot S$	$(F-M\cdot g)\cdot S$
All absorbed energy E (J)	$E = E_1$	$E = E_1+E_2$	$E = E_1+E_2$	$E = E_1+E_2$	$E = E_1+E_2$	$E = E_1+E_2$
Equivalent weight Me(kg)	$Me = M$	$Me = \frac{2\cdot E}{V^2}$	$Me = \frac{2\cdot E}{V^2}$	$Me = \frac{2\cdot E}{V^2}$ $(V=\sqrt{2\cdot g\cdot H})$	$Me = \frac{2\cdot E}{V^2}$	$Me = \frac{2\cdot E}{V^2}$

	Slope colliding			Oscillation colliding		Rotation colliding
	g. Free fall	h. Pushing force of cylinder applies	i. When thrust of cylinder is applied	j. Free fall	k. Torque of motor, etc., applies	L. Torque of motor, etc., applies
Applications	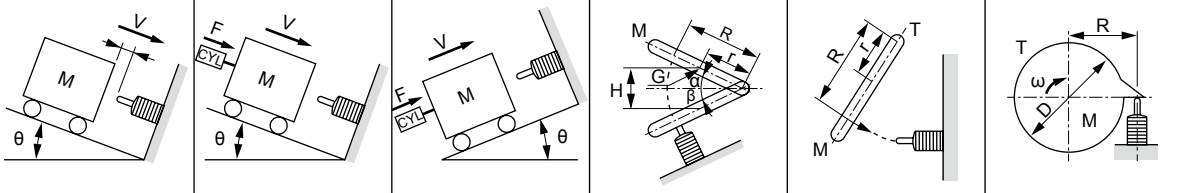					
Kinetic energy E_1(J)	$\frac{1}{2}\cdot M\cdot V^2$	$\frac{1}{2}\cdot M\cdot V^2$	$\frac{1}{2}\cdot M\cdot V^2$	$M\cdot g\cdot H$	$\frac{J\cdot\omega^2}{2}$ or $\frac{1}{2}\cdot M\cdot V^2$	$\frac{J\cdot\omega^2}{2} = \frac{M\cdot D^2\cdot\omega^2}{16}$
Thrust/self-weight energy E_2(J)	$M\cdot g\cdot S\cdot\sin\theta$	$(M\cdot g\cdot\sin\theta+F)\cdot S$	$(F-M\cdot g\cdot\sin\theta)\cdot S$	$\frac{r}{R}\cdot M\cdot g\cdot S$	$\frac{T}{R}\cdot S$	$\frac{T}{R}\cdot S$
All absorbed energy E (J)	$E = E_1+E_2$	$E = E_1+E_2$	$E = E_1+E_2$	$E = E_1+E_2$	$E = E_1+E_2$	$E = E_1+E_2$
Equivalent weight Me(kg)	$Me = \frac{2\cdot E}{V^2}$ $(V=\sqrt{2\cdot g\cdot L\cdot\sin\theta})$	$Me = \frac{2\cdot E}{V^2}$	$Me = \frac{2\cdot E}{V^2}$	$Me = \frac{2\cdot E}{V^2}$ $(V=\frac{R}{r}\sqrt{\frac{3\cdot g\cdot H}{2}})$	$Me = \frac{2\cdot E}{V^2}$ $(V=\omega\cdot R)$	$Me = \frac{2\cdot E}{V^2}$ $(V=\omega\cdot R,\ \omega=\frac{2\pi\cdot N}{60})$

● Explanation of code
E = all absorbed energy J
E_1 = kinetic energy J
E_2 = thrust/self-weight energy J

a. Kinetic energy..... Calculate the E_1 value according to "Example of colliding pattern".
b. Thrust/self-weight energy ..... Calculate the value of E_2 according to "Example of colliding pattern". For S (stroke length of SKL) in the formula, select a model whose max. absorbed energy exceeds E_1, and use S for that model No.
c. Total absorbed energy..... If after that the calculation result exceeds Emax (max. energy absorption), select one size larger SKL than the previously selected model No., and recalculate. If calculated E is lower than Emax selected model No., the selection is acceptable.

4 Confirm the equivalent weight

a. Calculate value of Me according to "Example of colliding pattern".
b. Usable if Me is within Me range of selected model (calculated value of Me < specified value of Me) according to calculation of Me (catalog value) and "a" for model No. selected at 3.
c. When exceeding the Me range of the selected model at b, select an SKL one size larger, and check conditions in the same manner.

Note: Equivalent mass corresponds to weight of workpiece, even for body moving with thrust, etc., if it is assumed that all of them are kinetic energy only. This allows the load to be controlled at very low speed conditions.

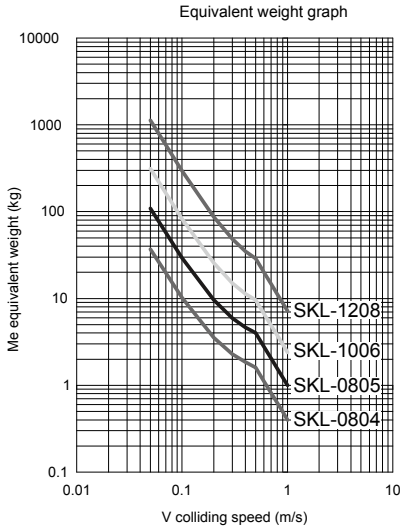

5 Confirm shock absorber specifications range

a. Max. repeating cycle	[cycle/min.]	c. Ambient temperature	[°C]
b. Max. colliding speed	[m/s]	d. Return time	[s]

Note: Value of allowable energy absorption may vary depending on colliding speed.

Example of selection

1 Clarify the colliding pattern of the device

Applications	Vertical colliding e. Cylinder lower limit stopper 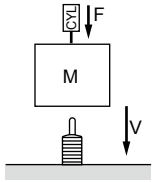
Kinetic energy E_1(J)	$E_1 = \frac{1}{2} \cdot M \cdot V^2$
Thrust/self-weight energy E_2(J)	$E_2 = (Mg + F) \cdot S$
All absorbed energy E (J)	$E = E_1 + E_2$
Equivalent weight Me (kg)	$Me = \frac{2 \cdot E}{V^2}$

2 Make required conditions/descriptions clear to calculate energy

(Example)

Colliding object weight:	M=1.0 kg
Colliding speed:	V=0.5 m/s
Pushing force:	F=70 N
Frequency:	30 cycle/min.
Ambient temperature:	23°C
Return time:	2s (time up to re-collision)

3 Calculate actual energy in accordance with the sample figure for the colliding pattern.

Calculate E_1

$E_1 = \frac{1}{2} \cdot MV^2 = \frac{1}{2} \times 1 \times 0.5^2 = 0.13$ (J)

Tentatively select SKL-0804 from E_1, then calculate E_2

$E_2 = (Mg + F) \cdot S = (1 \times 9.8 + 70) \times 0.0035 = 0.28$(J)

As it exceeds the allowable absorbed energy of SKL-0804, recalculate with the one size larger SKL-0805

$E_2 = (Mg + F) \cdot S = (1 \times 9.8 + 70) \times 0.0045 = 0.36$(J)

$E = E_1 + E_2 = 0.13 + 0.36 = 0.49$(J)

Acceptable as it is less than the allowable absorbed energy of SKL-0805

4 Confirm the equivalent weight

$Me = \frac{2E}{V^2} = \frac{2 \times 0.49}{0.5^2} = 3.92$(kg)

As it is less than the allowable value of SKL-0805, select OK SKL-0805

MEMO

NCK

Shock absorber/fixed

Related products

Overview

Compared to the SCK, the NCK shock absorber is the ideal buffering device for stopping a workpiece with thrust at medium or slow speeds. Slit orifice method that was thought difficult to realize is used. Due to this structure, high absorbing performance and linear soft stop, etc., are achieved in slow speed operation range. Furthermore, the compact, slim, space saving design contributes to the FA system configuration.

Features

Available for thrust energy

Absorbing thrust energy of cylinder, etc., is efficient. Very soft stopping is also achieved.

Smooth absorbing even if slowly operated

Superior characteristics in slow speed range enable smooth impact absorption.

Compact but large absorbing force

Compact and slim design which absorbs a lot of energy. This product is remarkably efficient at saving space.

Simple mounting

Linear soft stop

Extensive models

8 types are available by absorbed energy. Select according to applications.

CONTENTS

Series variation	1891
● NCK (max. absorbed energy 1 to 200 J)	1902
Selection guide	1908
⚠ Safety precautions	1941

Shock absorber

NCK Series

● Max. absorbed energy: 1 to 200 J

RoHS CAD

Specifications

Item			NCK							
Series			0.1	0.3	0.7	1.2	2.6	7	12	20
Type/Classification			Spring return without adjuster							
Max. energy absorption		J	1	3	7	12	26	70	120	200
O.D. thread size		mm	M8x0.75		M10x1.0	M12x1.0	M14x1.5	M20x1.5	M25x1.5	M27x1.5
Stroke		mm	4.5	6	8	10	15	20	25	30
Max. absorbed energy per hour		kJ/hr	4.8	6.3	12.6	21.6	39.0	84.0	86.4	108.0
Max. colliding speed		m/s	1.0	1.5		2.0		2.5	3.0	
Max. operating frequency		Cycle/min.	80	35	30		25	20	12	9
Ambient temperature		°C	-10 (14°F) to 80 (176°F)							
Max. load (resistance)		N	525	1150	2010	2750	4000	7980	10950	15380
Return time		S	0.3 or less					0.4 or less		0.5 or less
Weight		kg	0.009	0.012	0.02	0.04	0.07	0.2	0.3	0.45
Return spring force	When extended	N	2.9		2.0	2.9	5.9	9.8	16.3	
	When compressed	N	4.5		4.3	5.9	11.8	21.6	33.3	33.9

Note: The speed and absorption capacity of the shock absorber vary depending on the ambient temperature. Values given in the above specifications are for room temperature.

How to order

NCK - 00 - 0.7 - N1

Ⓐ Mounting

Ⓑ Series

Ⓒ Option *1

Code	Description
Ⓐ Mounting	
00	Basic
FA	Flange
Ⓑ Series (max. energy absorption)	
0.1	1 J
0.3	3 J
0.7	7 J
1.2	12 J
2.6	26 J
7	70 J
12	120 J
20	200 J
Ⓒ Option	
Blank	Standard
N1	With stop nut
C	Capped

⚠ Precautions for model No. selection

*1: 3 hexagon nuts are provided for N1 specifications products.

[Example of model No.]

NCK-00-0.7-N1

Model: Shock absorber

Ⓐ Mounting : Basic
Ⓑ Series : Max. energy absorption 7J
Ⓒ Option : With stop nut

How to order options

● Flange bracket (1 pc.)

NCK - 0.7 - FA

● Stop nut + hexagon nut (each 1 pc.)

NCK - 0.7 - N1

● Hexagon nut (1 pc.)

NCK - 0.7 - NT

Code	Series (max. energy absorption)
0.1	1 J
0.3	3 J
0.7	7 J
1.2	12 J
2.6	26 J
7	70 J
12	120 J
20	200 J

Specifications for rechargeable battery (Catalog No. CC-1226A)

NCK - ··· - P4*

● Design compatible with rechargeable battery manufacturing process

* Contact CKD for details.

LCM
LCR
LCG
LCW
LCX
STM
STG
STS/STL
STR2
UCA2
ULK*
JSK/M2
JSG
JSC3/JSC4
USSD
UFCD
USC
UB
JSB3
LMB
LML
HCM
HCA
LBC
CAC4
UCAC2
CAC-N
UCAC-N
RCS2
RCC2
PCC
SHC
MCP
GLC
MFC
BBS
RRC
GRC
RV3*
NHS
HRL
LN
Hand
Chuk
MecHnd/Chuk
ShkAbs
FJ
FK
SpdContr
Ending

Operational explanation

(1) Collision
When the workpiece collides with the piston rod, the oil in the tube pushed by the piston is simultaneously pressurized. The pressurized oil passes through grooves on CKD's original slit orifice, and flows toward the oil chamber with an air chamber. The piston is further pressed in by cylinder thrust or workpiece weight, etc., but the area of the slit orifice gradually decreases, so that even higher resistance is generated. These series of operations are done continuously to stop the workpiece smoothly.

(2) Return
When released from the workpiece, the piston returns with the integrated spring. At this time it moves from the seal to the valve stopper, so that the oil return flow path is opened by the cutoff section on the piston. Oil passes through this flow path and the slit orifice and returns to the state before the workpiece collided. In this state, the system is on standby for the next workpiece collision.

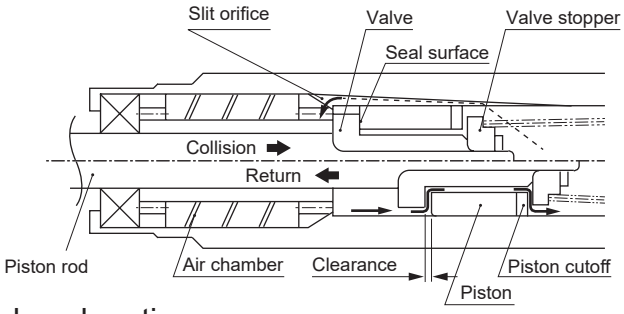

Fig. 1

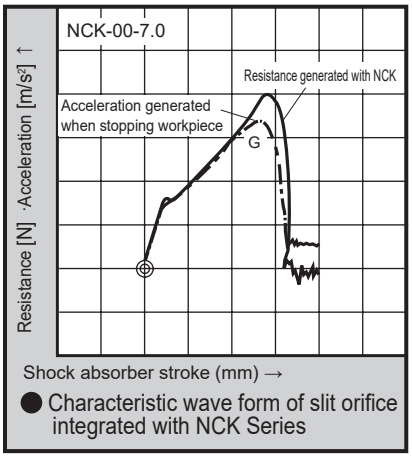

● Characteristic wave form of slit orifice integrated with NCK Series

Fig. 2

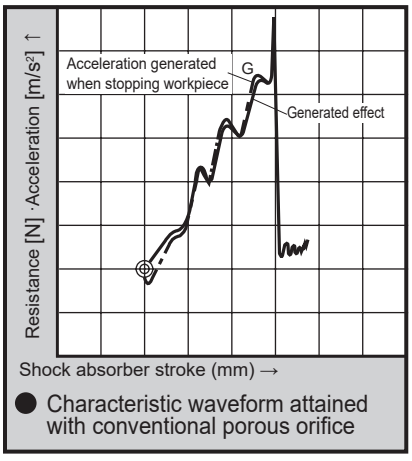

● Characteristic waveform attained with conventional porous orifice

Structural explanation

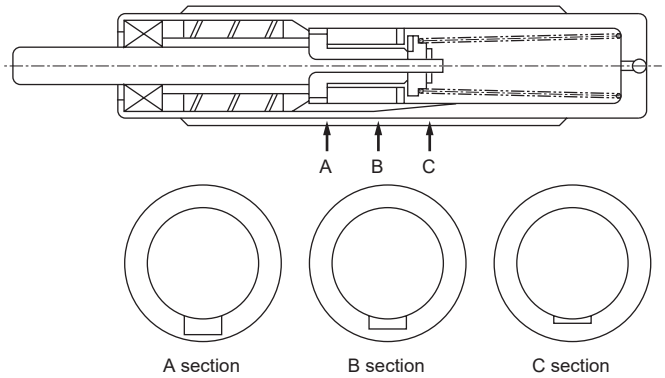

1. The slit orifice smoothly changes (decreases) as the piston moves as shown above.
This structure enables an ideal "stop" when used with a hydraulic damper, but as manufacturing is difficult, it has not been integrated in other brands. CKD has handled this tough issue with linear stopping performance as shown in Fig.1.

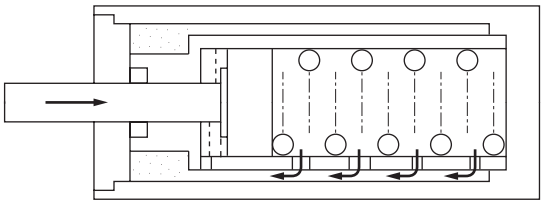

2. Generally, the dual tube shown above is used for the orifice area as a structure that changes with piston movement. Multiple small orifice holes in the inner pipe are closed as the piston moves. In this structure, performance via hole positioning precision is greatly affected, and resistance changes with each orifice, preventing smooth operation as shown in Fig. 2.

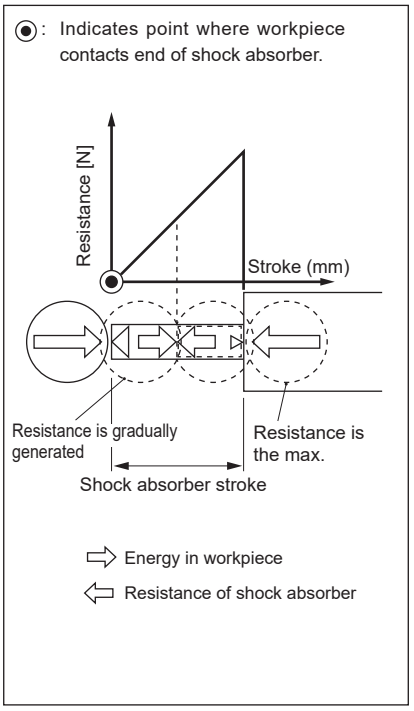

Internal structure and parts list

LCM
LCR
LCG
LCW
LCX
STM
STG
STS/STL
STR2
UCA2
ULK*
JSK/M2
JSG
JSC3/JSC4
USSD
UFCD
USC
UB
JSB3
LMB
LML
HCM
HCA
LBC
CAC4
UCAC2
CAC-N
UCAC-N
RCS2
RCC2
PCC
SHC
MCP
GLC
MFC
BBS
RRC
GRC
RV3*
NHS
HRL
LN
Hand
Chuk
MecHnd/Chuk
ShkAbs
FJ
FK
SpdContr
Ending

● Basic (without cap)

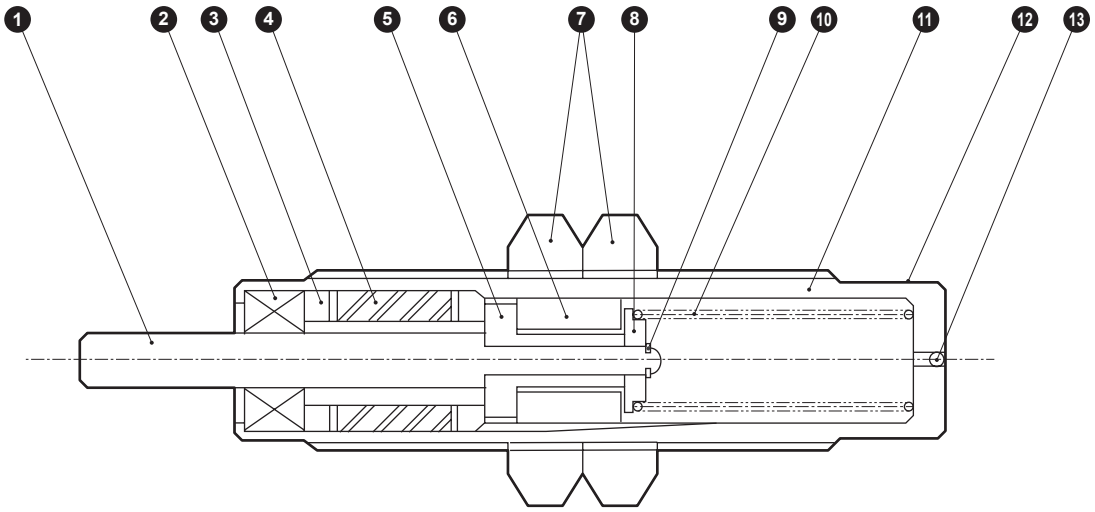

● Capped

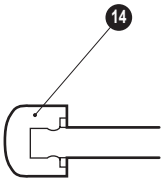

NCK-**- 0.1 / 0.3 / 0.7 / 1.2 / 2.6 -C

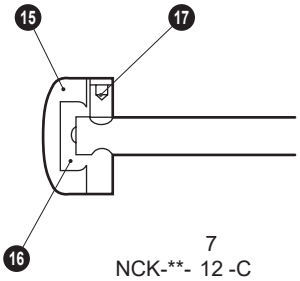

NCK-**- 7 / 12 / 20 -C

Cannot be disassembled

Parts list

No.	Part name	Material	Remarks	No.	Part name	Material	Remarks
1	Rod	Steel	Industrial chrome plating	10	Spring	Piano wire	
2	Oil seal	Special nitrile rubber		11	Damper case	Steel	Chrome plating
3	Rod guide	Copper alloy		12	Label	Polyester film	
4	Air chamber	Nitrile rubber		13	Ball	Alloy steel	
5	Valve	Steel		14	Damper cushion	Polyamide resin	Black
6	Piston	Cast iron		15	Damper cushion	Polyester resin	Black
7	Hexagon nut	Steel	Zinc plated	16	Cushion stopper	Steel	Zinc plated
8	Valve stopper	Steel		17	Hexagon socket set screw	Steel	
9	E type snap ring	Steel for spring	Zinc plated				

LCM
LCR
LCG
LCW
LCX
STM
STG
STS/STL
STR2
UCA2
ULK*
JSK/M2
JSG
JSC3/JSC4
USSD
UFCD
USC
UB
JSB3
LMB
LML
HCM
HCA
LBC
CAC4
UCAC2
CAC-N
UCAC-N
RCS2
RCC2
PCC
SHC
MCP
GLC
MFC
BBS
RRC
GRC
RV3*
NHS
HRL
LN
Hand
Chuk
MecHnd/Chuk
ShkAbs
FJ
FK
SpdContr
Ending

Dimensions

CAD

● Standard (NCK-**-**)

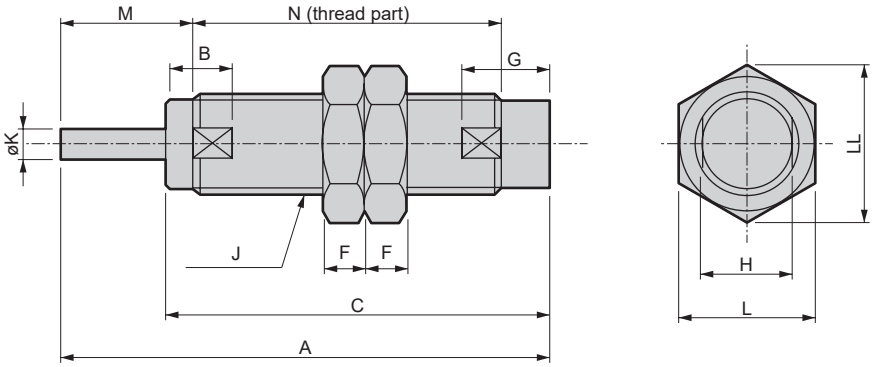

● Capped (NCK-**-**-C)

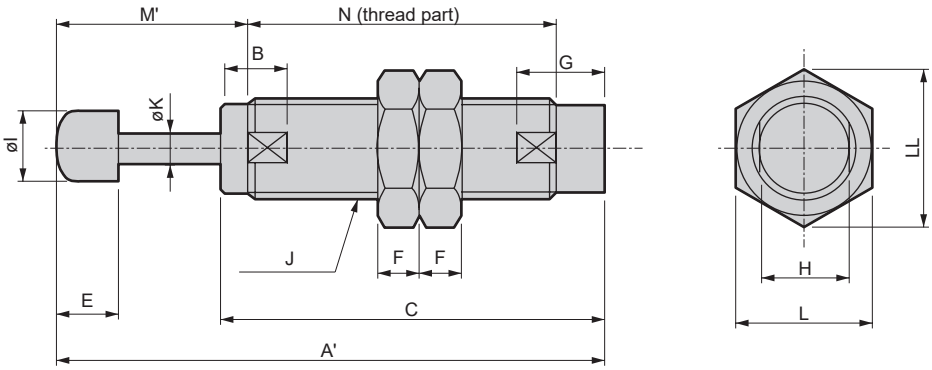

Code	Basic (00)															
Model No.	A	A'	B	C	E	F	G	H	I	J	K	L	LL	M	M'	N
NCK-00-0.1	34.5	40.5	4	29.5	6	4	7.5	7	6	M8x0.75	2.8	12	13.9	6	12	23
NCK-00-0.3	45.5	51.5	7.5	39	6	4	8	7	6	M8x0.75	2.8	12	13.9	11	16.5	29.0
NCK-00-0.7	50	57	7.5	41.5	7	4	9	9	8	M10x1.0	3	14	16.2	13	20	31
NCK-00-1.2	57.5	65	8.5	47	7.5	5	11	11	10	M12x1.0	3.5	17	19.6	15	22.5	35.5
NCK-00-2.6	86	96	10.5	70.5	10	5.5	14	13	12	M14x1.5	5	19	21.9	20	30	58
NCK-00-7	98.5	109.5	12.5	78	11	8	18	19	16	M20x1.5	6	27	31.2	25	36	63.5
NCK-00-12	129	142	15.5	103.5	13	10	23	24	22	M25x1.5	8	32	37	30	43	87
NCK-00-20	141	154	15.5	110.5	13	10	25	24	22	M27x1.5	8	32	37	35	48	92

Dimensions: Option [flange (mounting bracket)]

● NCK-0.1 / 0.3 / 0.7 / 1.2 -**

Flange (FA)
Material: Steel

Stop nut (N1)
Material: Steel

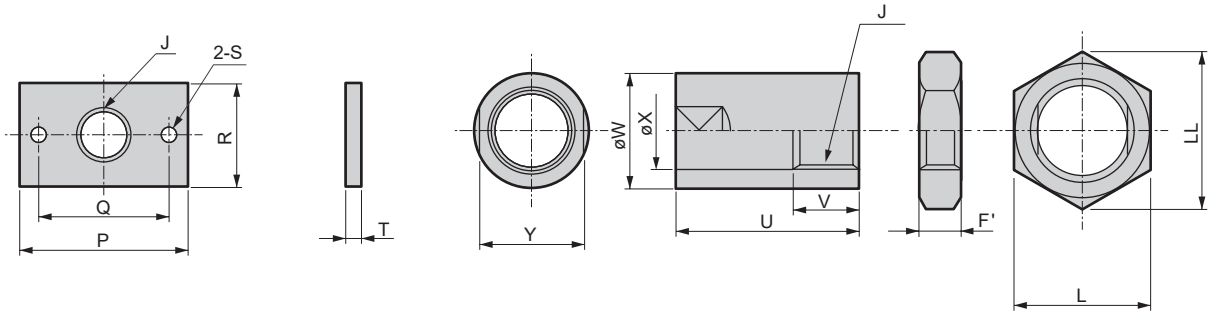

● NCK-2.6 / 7 / 12 / 20 -**

Flange (FA)
Material: Steel

Stop nut (N1)
Material: Steel

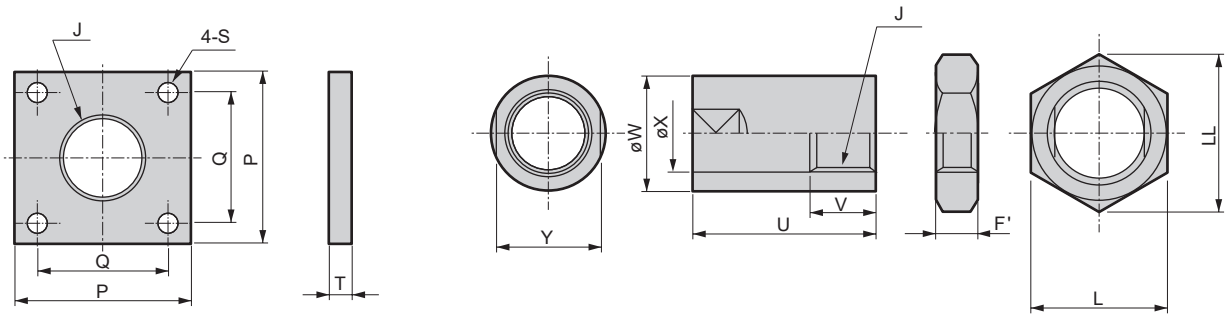

Code / Model No.	Flange (FA) J	P	Q	R	S	T	Weight (g)	Stop nut (N1) F'	J	U	V	W	X	Y	Weight (g)
NCK-0.1-**	M8x0.75	42	30	20	5.5	2.3	14	4	M8x0.75	15	8	14	9	12	13
NCK-0.3-**	M8x0.75	42	30	20	5.5	2.3	14	4	M8x0.75	15	8	14	9	12	13
NCK-0.7-**	M10x1.0	42	30	20	5.5	2.3	14	4	M10x1.0	17	10	15	11	13	15
NCK-1.2-**	M12x1.0	46	34	20	5.5	3.6	22	5	M12x1.0	23	10	19	13	17	34
NCK-2.6-**	M14x1.5	52	38	-	6.5	6	115	5.5	M14x1.5	26.5	10	20	15	17	37
NCK-7-**	M20x1.5	52	38	-	6.5	6	108	8	M20x1.5	36.5	15	26	21	24	77
NCK-12-**	M25x1.5	52	38	-	6.5	6	100	10	M25x1.5	35	15	32	26	30	112
NCK-20-**	M27x1.5	52	38	-	6.5	6	100	10	M27x1.5	45.5	15	35	28	32	155

Shock absorber selection guide (1)

1 Clarify the colliding pattern of the device

Horizontal motion
- a. Simple horizontal collision
- b. Collision with cylinder thrust
- c Collision with drive force of motor

Vertical motion
- d. Collision due to free fall
- e. Collision with cylinder thrust (downward)
- f. Collision with cylinder thrust (upward)

Slope motion
- g. Collision due to free sliding
- h. Collision with cylinder thrust (downward)
- i. Collision with cylinder thrust (upward)

Oscillation Rotation motion
- j. Collision due to free oscillating fall
- k. Colliding with torque of motor, etc., (oscillation)
- l. Colliding with torque of motor, etc., (rotation)

Note:Refer to "Example of colliding pattern".

2 Make required conditions/descriptions clear to calculate energy

E = all absorbed energy (J)
E_1 = kinetic energy (J)
E_2 = thrust/self-weight energy (J)

L = colliding object travel distance (m) (Slope free fall)
R = distance from center of rotation to colliding point (m)
r = distance from center of rotation to center of gravity (m)
G = position of center of gravity

M = colliding weight (kg)
V = colliding speed (m/s)
S = NCK stroke length (m)
F = pushing force (N)
g = gravity acceleration 9.8 m/s²
ω = angular speed (rad/s)
J = moment of inertia (kg/m²)
D = diameter (m)
N = number of rotations (rpm)
Me = equivalent weight (kg)

H = drop height (m)
T = torque (N·m)
Td = motor start torque (N·m)
K = reduction ratio
θ, α, β = tilt angle (deg)

Example of colliding pattern

	Horizontal colliding			Vertical colliding		
	a. Simple horizontal collision	b. Pushing force of cylinder applies	c. Pushing force of motor applies	d. Free fall	e. Cylinder lower limit stopper	f. Cylinder upper limit stopper
Applications	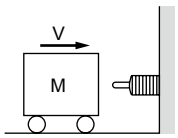	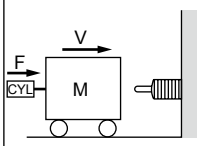	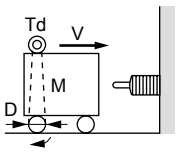	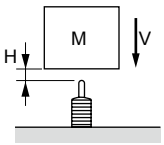	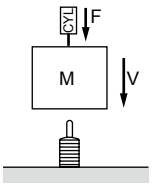	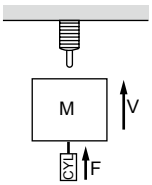
Kinetic energy E_1(J)	$\frac{1}{2}\cdot M\cdot V^2$	$\frac{1}{2}\cdot M\cdot V^2$	$\frac{1}{2}\cdot M\cdot V^2$	$\frac{1}{2}\cdot M\cdot V^2$	$\frac{1}{2}\cdot M\cdot V^2$	$\frac{1}{2}\cdot M\cdot V^2$
Thrust/self-weight energy E_2(J)	-------	$F\cdot S$	$2\cdot\frac{K}{D}\cdot Td\cdot S$	$M\cdot g\cdot S$	$(M\cdot g+F)\cdot S$	$(F-M\cdot g)\cdot S$
All absorbed energy E (J)	$E=E_1$	$E=E_1+E_2$	$E=E_1+E_2$	$E=E_1+E_2$	$E=E_1+E_2$	$E=E_1+E_2$
Equivalent weight Me(kg)	Me=M	$Me=\frac{2\cdot E}{V^2}$	$Me=\frac{2\cdot E}{V^2}$	$Me=\frac{2\cdot E}{V^2}\ (V=\sqrt{2\cdot g\cdot H})$	$Me=\frac{2\cdot E}{V^2}$	$Me=\frac{2\cdot E}{V^2}$

	Slope colliding			Oscillation colliding		Rotation colliding
	g. Free fall	h. Pushing force of cylinder applies	i. When thrust of cylinder is applied	j. Free fall	k. Torque of motor, etc., applies	L. Torque of motor, etc., applies
Applications	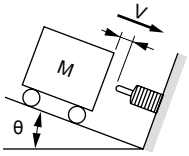	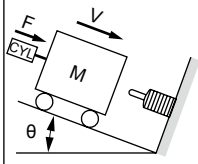	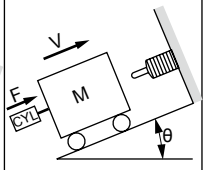	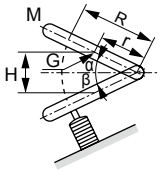	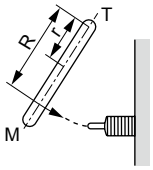	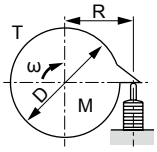
Kinetic energy E_1(J)	$\frac{1}{2}\cdot M\cdot V^2$	$\frac{1}{2}\cdot M\cdot V^2$	$\frac{1}{2}\cdot M\cdot V^2$	$M\cdot g\cdot H$	$\frac{J\cdot\omega^2}{2}$ or $\frac{1}{2}\cdot M\cdot V^2$	$\frac{J\cdot\omega^2}{2}=\frac{M\cdot D^2\cdot\omega^2}{16}$
Thrust/self-weight energy E_2(J)	$M\cdot g\cdot S\cdot\sin\theta$	$(M\cdot g\cdot\sin\theta+F)\cdot S$	$(F-M\cdot g\cdot\sin\theta)\cdot S$	$\frac{r}{R}\cdot M\cdot g\cdot S$	$\frac{T}{R}\cdot S$	$\frac{T}{R}\cdot S$
All absorbed energy E (J)	$E=E_1+E_2$	$E=E_1+E_2$	$E=E_1+E_2$	$E=E_1+E_2$	$E=E_1+E_2$	$E=E_1+E_2$
Equivalent weight Me(kg)	$Me=\frac{2\cdot E}{V^2}\ (V=\sqrt{2\cdot g\cdot L\cdot\sin\theta})$	$Me=\frac{2\cdot E}{V^2}$	$Me=\frac{2\cdot E}{V^2}$	$Me=\frac{2\cdot E}{V^2}\ (V=\frac{R}{r}\sqrt{\frac{3\cdot g\cdot H}{2}})$	$Me=\frac{2\cdot E}{V^2}\ (V=\omega\cdot R)$	$Me=\frac{2\cdot E}{V^2}\ (V=\omega\cdot R,\ \omega=\frac{2\pi\cdot N}{60})$

3 Check shock absorber specifications range

a. Max. repeating cycle [cycle/min.]
b. Max. colliding speed [m/s]
c. Ambient temperature [°C]
d. Return time [s]

Note: Value of allowable energy absorption may vary depending on colliding speed. Refer to Graph 5 on page 1911.

4 Calculate actual energy per "Example of colliding pattern"

● Explanation of code

E = all absorbed energy J

E_1 = kinetic energy J

E_2 = thrust/self-weight energy J

a. Kinetic energy …… Calculate the E_1 value according to "Example of colliding pattern".

b. Thrust/self-weight energy … Calculate the value of E_2 according to "Example of colliding pattern". For S (stroke length of NCK) in the formula, select a model whose max. absorbed energy exceeds E_1, and use S for that model No.

c. Total absorbed energy …… If after that the calculation result exceeds Emax (max. energy absorption), select one size larger NCK than the previously selected model No., and recalculate. If calculated E is lower than Emax selected model No., the selection is acceptable.

5 Confirm the equivalent weight

Me = Equivalent weight [kg]

Note: Equivalent weight corresponds to weight of workpiece, even for body moving with thrust, etc., if it is assumed that all of them are kinetic energy only. If only the energy formula is used, load is restricted by the equivalent weight, because the weight of workpiece will increase sharply in low speed operations.

a. Calculate value of Me according to "Example of colliding pattern".
b. Usable if Me is within Me range of selected model (calculated value of Me < specified value of Me) according to calculation of Me (catalog value) and "a" for model No. selected at 4.
c. When exceeding the Me range of the selected model at b, select an NCK one size larger, and check conditions in the same manner.

Note) Equivalent weight (Me) is listed on page 1911 (Graph 4).

6 Calculation flow chart of step 4 and 5

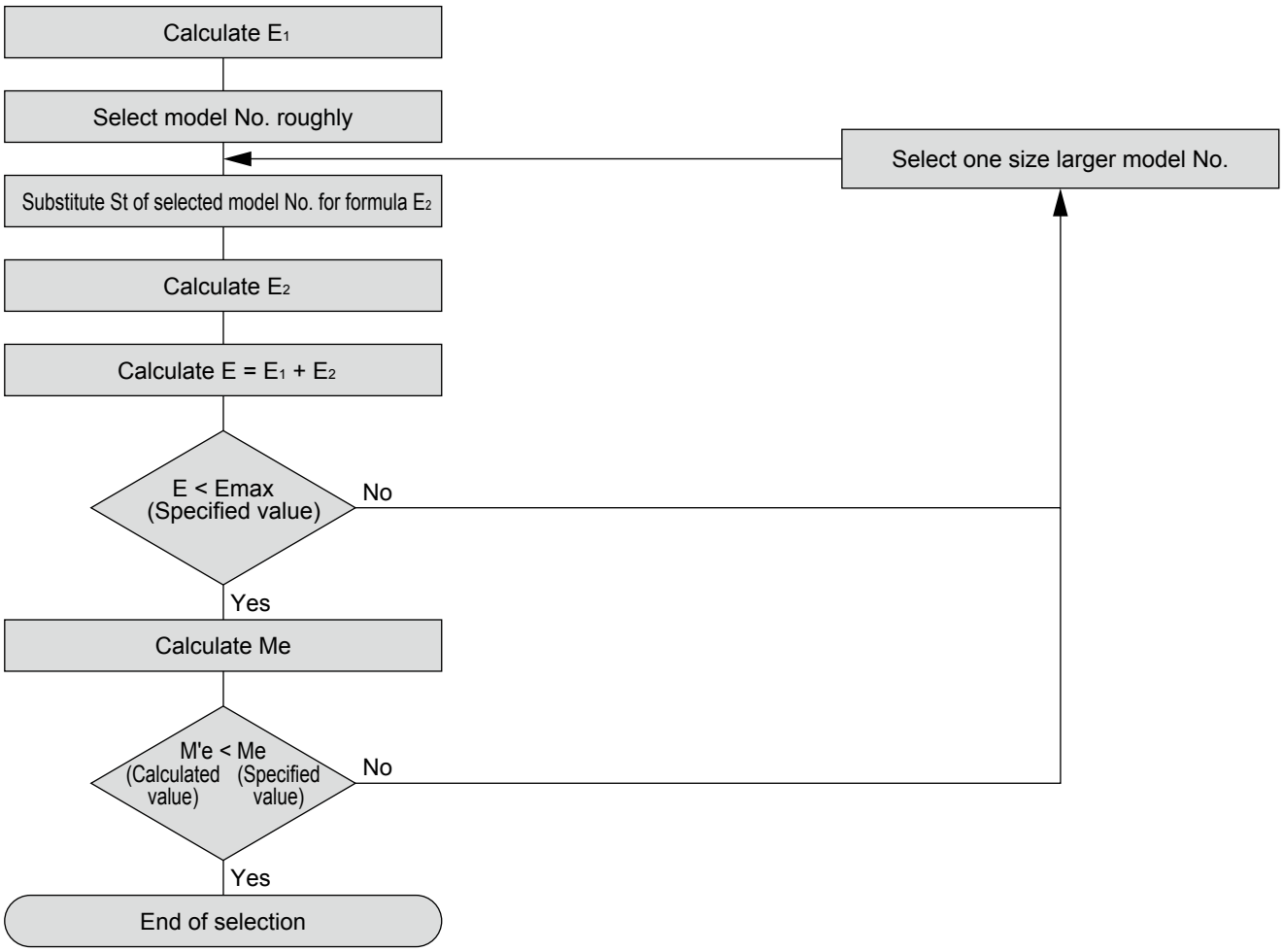

Shock absorber selection guide (2)

Shock absorber models can be selected either entirely by calculation, as in (1), or through the graph. If not required to grasp energy values, etc., during calculation, if this graph is used, proper model can be selected efficiently.

Condition of this figure: Horizontal colliding with thrust
m=50 kg, V=1.0 m/s
Cylinder bore size ø50
Supply pressure = 0.5 MPa

Energy calculation graph

●Thrust applies at the horizontal collision

[Graph 1]

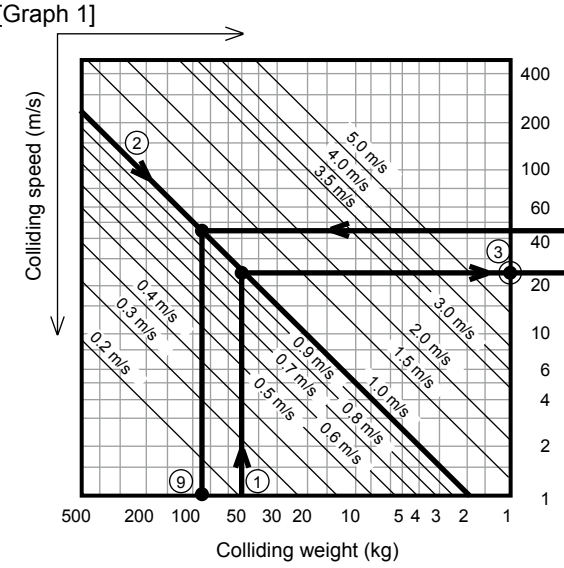

[Graph 2]

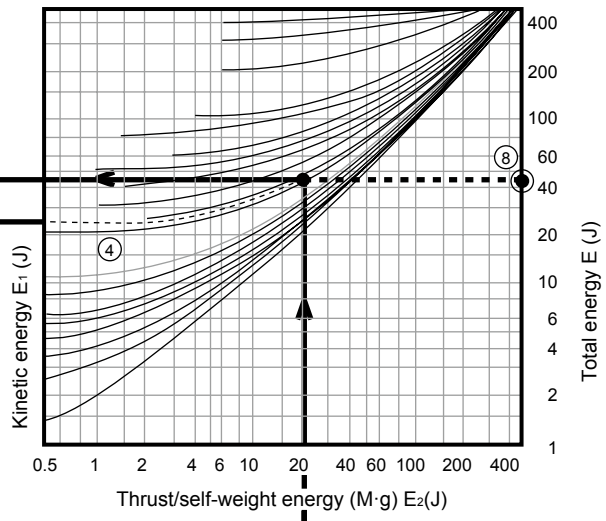

[Graph 3]

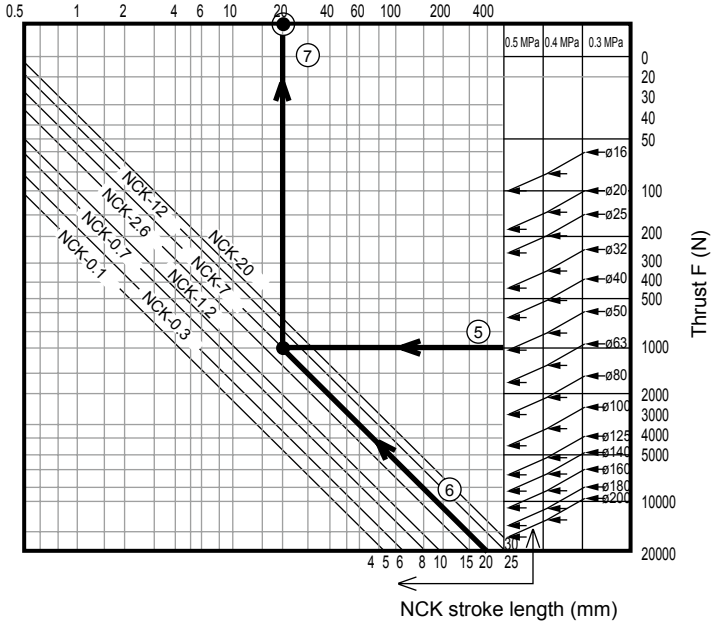

a) Determine the colliding weight M (kg)...①
b) Collision speed V (m/s) ... ②
c) Point of intersection between M and V ③ is kinetic energy E_1 (J). ... ③
d) Extend ③ to [Graph 2], and refer to the curve in the figure to draw a similar curve. (dotted line) ... ④
e) Next, if thrust applies, determine thrust F (N) (from bore and pressure of cylinder) by the right end chart of [Graph 3] ... ⑤
f) Determine model No. of NCK according to stroke length and max. energy absorption. ... ⑥
(Select a model No. whose max. energy absorption exceeds E_1 calculated in step ③.)
g) The point of intersection between F and NCK model No. ⑦ shows the thrust/self-weight energy E_2 (J). ... ⑦
h) Extend point Ⓑ to [Graph 2], and point of intersection ⑧ with curve ④ shows total energy E (= E_1 + E_2) (J). ... ⑧
Here, if value E exceeds the selected NCK Emax (max. absorbed energy) at (f), select an NCK model No. one size larger again, and then find E with the same procedure.
i) Here, if "Ⓒ" and ⑧ are extended to [Graph 1], the point of intersection ⑨ with V (m/s) represents the equivalent weight Me. ... ⑨
Check that equivalent weight is within the specified value range [Graph 4].
(When Me exceeds specifications values, return to (f) and repeat the same procedures.)

Example of selection

Select shock absorber according to example.

Example Select shock absorber which stops load M smoothly under left figure conditions.

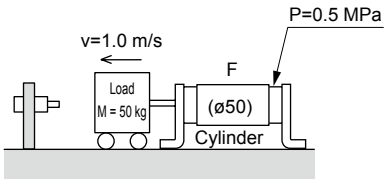

Frequency: 10 cycle/min.
(Refer to equipment indoors.)

1 The colliding pattern of the device is equivalent to "b".

2 Summarize required conditions to calculate.

a. Colliding object weight M=50 kg
b. Colliding speed V=1.0 m/s
c. Cylinder thrust $F=\pi/4\times50^2 mm\times0.5$ MPa=981.7 N

3 Check specifications.

a. Frequency 10 cycles/min. ..... NG, since max. repeating cycle of NCK-20 is 9 cycle/min. [limited to models of NCK-12 and below]
b. Colliding speed 1.0 m/s..... All models are available
c. Ambient temperature:
Indoor equipment ..... All models are available
d. Return time: Not specified..... All models are available

4 Calculate actual energy.

● From pattern figure example "b"

a. Kinetic energy: $E_1 = \frac{1}{2}\cdot m\cdot V_2 = \frac{1}{2}$x 50 (kg) x 1.0^2 (m/s) = 25 (J)
Here, since as with E_1 alone this was 25 J, NCK-2.6 [Emax = 26 J] (St = 15 mm) is provisionally selected.
b. Thrust energy: E_2 = FxS = 981.7 (N) 0.015 (m) = 14.7 (J)
c. Total absorbed energy: E = E_1 + E_2 = 25 (J) +14.7(J) = 39.7(J)
Recalculate with one size larger NCK-7, since this E = 39.7 (J) cannot be absorbed with the NCK-2.6 provisionally selected earlier.
b'. E_2 = FxS = 981.7 (N) 0.02 (m) = 19.6 (J)
c'. E = E_1 + E_2 = 25 (J) +19.6(J) = 44.6(J)
Proceed to confirmation of the colliding object equivalent weight as this E = 44.6 (J) can be absorbed by NCK-7.

5 Confirm the equivalent weight.

● From pattern figure example "b" the same as 4

a. Equivalent weight Me = $\frac{2\cdot E}{V^2} = \frac{2 \text{ x } 44.6 \text{ [J]}}{1.0^2 \text{ [m/s]}}$ = 89.2 kg
b. NCK-7 Me is 150 (kg), larger than the calculated equivalent weight. Therefore, use NCK-7 under these conditions.

Rush speed characteristics graph of equivalent weight/absorbed energy

(Graph 5)

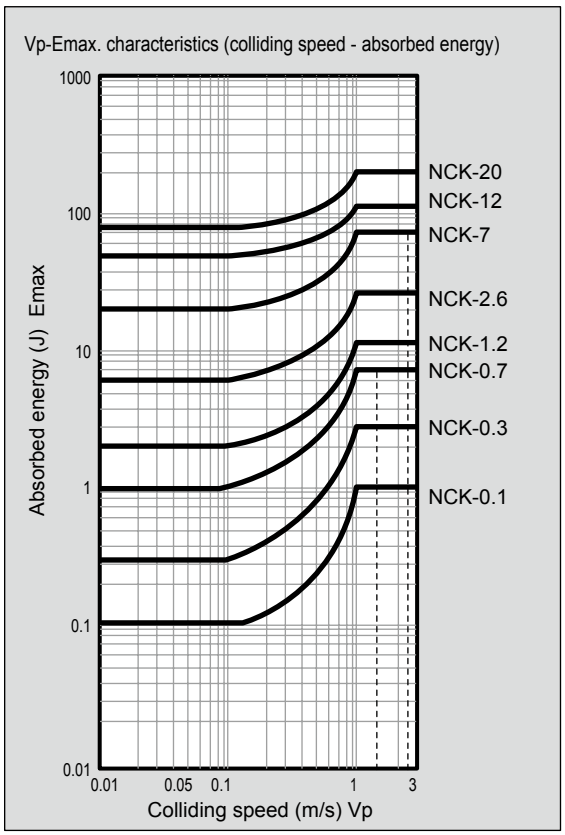

(Graph 4)

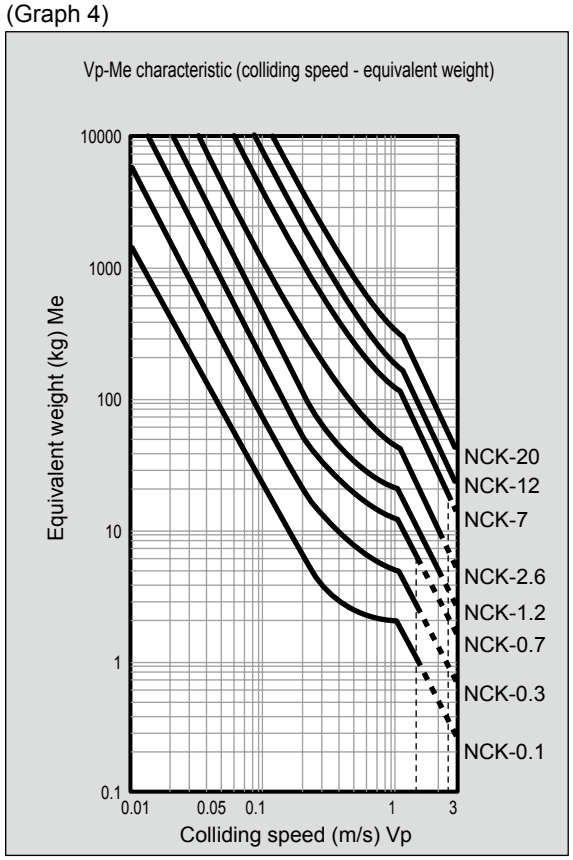

SCK

Shock absorber/adjustable

Related products

Overview

Impact force absorption with original mechanism. This adjustable shock absorber increases service life and production efficiency of facilities and equipment.
Compared to the NCK, the SCK shock absorber is the ideal buffering device for stopping a workpiece that moves or free-falls at high speeds.

Features

Safely stops the movable object.
Production cycle is increased.
Life of machinery is extended.
Noise levels are reduced, improving the environment of mechanical facilities.
Mechanical failure can be prevented.

CONTENTS

Series variation	1891
● SCK (max. absorbed energy 0.049 to 588J)	1914
Applications	1919
Selection guide	1920
⚠ Safety precautions	1941

Shock absorber

SCK Series

• Max. energy absorption: 0.049 to 588J

RoHS CAD

Specifications

Item		SCK																
Series		0.005	0.01	0.03	0.3	0.6	1.2	2.6	6.5	8	12	20	30	40	60	0.25 M	0.5 M	1.0 M
Type/Classification		Spring return without adjuster			Spring return with adjuster											Spring return with adjuster (thread pitch: large)		
Max. energy absorption	J	0.049	0.098	0.294	2.94	5.88	11.8	25.5	63.7	78.4	118	196	294	392	588	3.43	11.8	74.5
O.D. thread size	mm	M10x1.0	M12x1.0	M16x1.0	M20x1.0		M25x1.5		M30x1.5		M40x1.5				M45x1.5	M14x1.5	M20x1.5	M27x3.0
Stroke	mm	7	10				15		25			40	60	70		10	15	30
Max. absorbed energy per hour	kJ/hr	0.135	0.27	0.98	8.1	10.8	21.6	39	78	86.4		108	126	120	144	9.2	21.2	80.5
Max. colliding speed	m/s	1.0				1.5	2.0		2.5		3.0				4.0	1.0	2.0	2.5
Max. operating frequency	Cycle/min.	45				30		25	20	18	12	9	7	5	4	45	30	18
Ambient temperature	°C	-10 (14°F) to 80 (176°F)																
Max. load (resistance)	N	39	59	147	540	1000	1400	3100	4600	5700	8600	9000		10000	15000	630	1440	4560
Return time	S	0.3 or less			0.4 or less				0.5 or less			0.6 or less				0.4 or less		0.5 or less
Weight	kg	0.02	0.04	0.07	0.2		0.32		0.63		1.17	1.25	1.39	1.45	2.05	0.05	0.13	0.39
Return Spring force	When extended N	1.2	2.0	5.9	5.9		6.9		12.0		20.0				29.0	3.9	5.5	7.6
	When compressed N	2.6	5.0	10.5	11.3		17.2		30.0		39.0	51.0	68.0	75.0	84.0	8.4	11.5	21.0
Copper and PTFE free specifications		—			Standard													

Note: Min. absorbed energy should be 1/5 of max. absorbed energy.

How to order

SCK - 00 - 0.3 - N1

Ⓐ Mounting

Ⓑ Series

Ⓒ Option

Code	Description
Ⓐ Mounting	
00	Basic
FA	Flange
Ⓑ Series (max. energy absorption)	
0.005	0.049 J
0.01	0.098 J
0.03	0.294 J
0.3	2.94 J
0.6	5.88 J
1.2	11.8 J
2.6	25.5 J
6.5	63.7 J
8	78.4 J
12	118 J
20	196 J
30	294 J
40	392 J
60	588 J
0.25 M	3.43 J
0.5 M	11.8 J
1.0 M	74.5 J
Ⓒ Option	
Blank	Standard
N1	With stop nut

Precautions for model No. selection

*1 : 3 hexagon nuts are provided for N1 specifications products.

[Example of model No.]

SCK-00-0.3-N1

Model: Shock absorber

Ⓐ Mounting : Basic

Ⓑ Series : Max. energy absorption 2.94 J

Ⓒ Option : With stop nut

How to order options

● Flange bracket (1 pc.)

SCK - 0.01 - FA

Ⓑ → Series

● Stop nut + hexagon nut (each 1 pc.)

SCK - 0.01 - N1

Ⓑ → Series

● Hexagon nut (1 pc.)

SCK - 0.01 - NT

Ⓑ → Series

LCM
LCR
LCG
LCW
LCX
STM
STG
STS/STL
STR2
UCA2
ULK*
JSK/M2
JSG
JSC3/JSC4
USSD
UFCD
USC
UB
JSB3
LMB
LML
HCM
HCA
LBC
CAC4
UCAC2
CAC-N
UCAC-N
RCS2
RCC2
PCC
SHC
MCP
GLC
MFC
BBS
RRC
GRC
RV3*
NHS
HRL
LN
Hand
Chuk
MecHnd/Chuk
ShkAbs
FJ
FK
SpdContr
Ending

Shock absorber and other buffers

As shown at right:

- The spring accumulates energy and functions as spring return force at the stroke end.
- Cylinder cushion (single orifice connected to hydraulic cylinder) increases resistance sharply at collision and does not decelerate smoothly.
- Shock absorbers without adjuster have a preset level of energy that is absorbed and so working conditions are limited (SCK-00-0.03 or below).
- Shock absorbers with adjuster have roughly constant resistance throughout the stroke, uniformly decelerating the object's speed. The curve moves in parallel vertically when adjusted, and collision energy is absorbed appropriately.

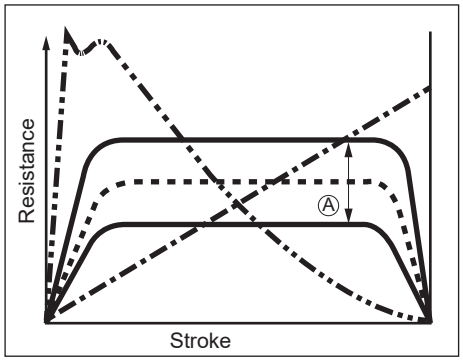

Spring
Cylinder cushion
Shock absorber without adjuster
Shock absorber
Ⓐ: The shock absorber is adjusted with the adjuster.

LCM
LCR
LCG
LCW
LCX
STM
STG
STS/STL
STR2
UCA2
ULK*
JSK/M2
JSG
JSC3/JSC4
USSD
UFCD
USC
UB
JSB3
LMB
LML
HCM
HCA
LBC
CAC4
UCAC2
CAC-N
UCAC-N
RCS2
RCC2
PCC
SHC
MCP
GLC
MFC
BBS
RRC
GRC
RV3*
NHS
HRL
LN
Hand
Chuk
MecHnd/Chuk
ShkAbs
FJ
FK
SpdContr
Ending

Internal structure and operational explanation

● SCK-00-0.005
00-0.01
00-0.03

Cannot be disassembled

Collision

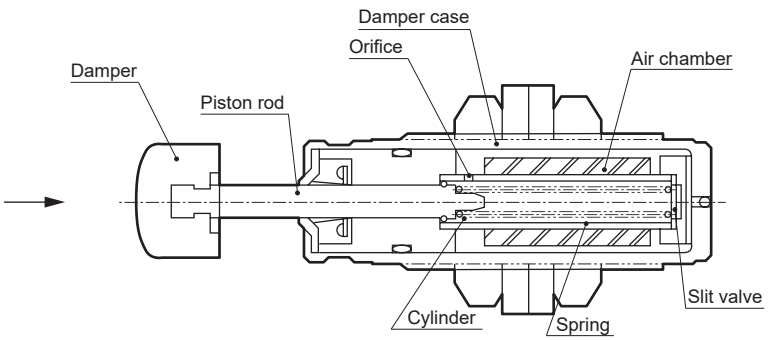

Collision

Collision force applied to the damper pushes the piston rod and pressurizes oil in the cylinder. When the generated hydraulic pressure passes through the orifice and flows into the damper case, shock is absorbed.
Oil flowing into the damper case pressurizes the air chamber and decreases air chamber volume.
Note) With this product structure, internal pressure increases with workpiece speed during collision, generating resistance and absorbing energy. Resistance may thus appear low when pushed by hand, but the product is not defective.

Return

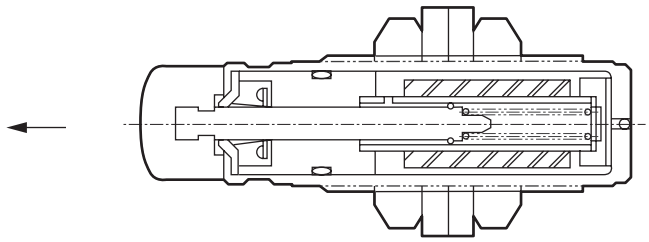

Return

When the colliding workpiece is removed, the piston rod is pushed out by the internal spring. At the same time, the slit valve (check valve) is opened by pressure in the air chamber. Oil flows to the inner pipe and at completion, the slit valve closes.

● SCK-00-0.3 to 60

Cannot be disassembled

Collision

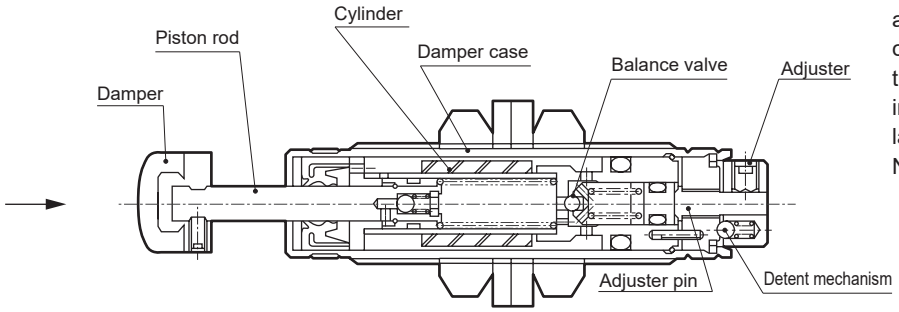

Collision

Collision force applied to the damper pushes the piston via the piston rod and pressurizes oil in the cylinder. When the generated hydraulic pressure passes through the orifice and balance valve and flows into the damper case, shock is absorbed. When the adjuster is turned clockwise, the adjustable pin moves and the force of the balance valve spring increases. Oil flow is decreased and a larger colliding force can be withstood.
Note) With this product structure, internal pressure increases with workpiece speed during collision, generating resistance and absorbing energy. Resistance may thus appear low when pushed by hand, but the product is not defective.

Return

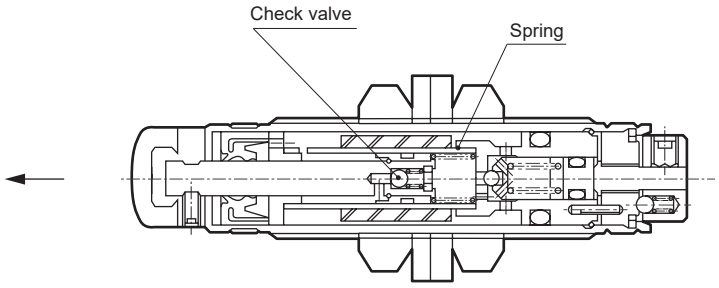

Return

When the colliding workpiece is removed, the piston rod is pushed out by the internal spring. At the same time, the check valve is opened by pressure in the air chamber. Oil flows to the inner pipe and at completion, the check valve closes.

Dimensions

● SCK-00-0.005
0.01
0.03

Basic (00)

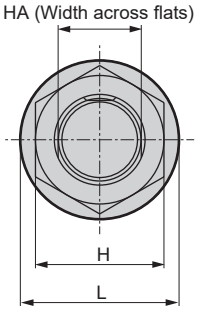

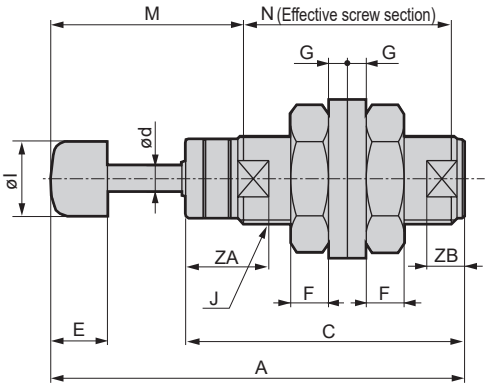

Code	Basic (00)														
Model No.	A	C	E	F	G	H	I	J	L	M	N	d	HA	ZA	ZB
SCK-00-0.005	41.5	27	7	4	2	14	8	M10x1.0	18	21.3	18.5	3.0	9	9	4
SCK-00-0.01	55	37	7.5	5	2.5	17	10	M12x1.0	21	25.5	27.5	3.5	11	11	5
SCK-00-0.03	70	49.5	10	6.5	2.5	22	14	M16x1.0	27	28.3	39.5	4.0	15	12	6

● SCK-00-0.3 to 60, 0.25 M to 1.0 M
(Screw pitch large)

Basic (00)

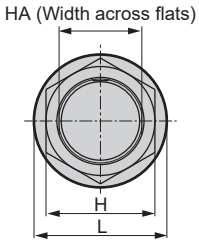

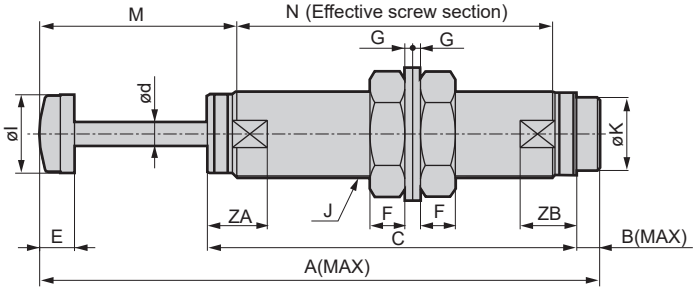

Code	Basic (00)																
Model No.	A	B	C	E	F	G	H	I	J	K	L	M	N	d	HA	ZA	ZB
SCK-00-0.3	94.6	5.8	66.8	11	8	2.9	27	16	M20x1.0	13.5	33	33.5	45.7	5	17	17.5	16
SCK-00-0.6	94.6	5.8	66.8	11	8	2.9	27	16	M20x1.0	13.5	33	33.5	45.7	5	17	17.5	16
SCK-00-1.2	122.5	7.5	86	13	10	2.9	32	22	M25x1.5	19.5	39	40.5	65.4	6	24	21	18
SCK-00-2.6	122.5	7.5	86	13	10	2.9	32	22	M25x1.5	19.5	39	40.5	65.4	6	24	21	18
SCK-00-6.5	157.4	7.9	109.5	14	12	3.6	41	27	M30x1.5	23.5	50	51.5	89.4	8	27	21.5	19.5
SCK-00-8	157.4	7.9	109.5	14	12	3.6	41	27	M30x1.5	23.5	50	51.5	89.4	8	27	21.5	19.5
SCK-00-12	175.6	10.5	123.1	16	16	3.6	50	36	M40x1.5	33.5	61	55.5	98.5	11	38	27.5	26
SCK-00-20	205.6	10.5	138.1	16	16	3.6	50	36	M40x1.5	33.5	61	70.5	113.5	11	38	27.5	26
SCK-00-30	257.1	10.5	169.6	16	16	3.6	50	36	M40x1.5	33.5	61	90.5	145	11	38	27.5	26
SCK-00-40	277.1	10.5	179.6	16	16	3.6	50	36	M40x1.5	33.5	61	100.5	155	11	38	27.5	26
SCK-00-60	298.4	10.9	198.6	18	18	4.5	55	42	M45x1.5	37.5	67	102.9	172.5	12.5	43.5	31.5	30
SCK-00-0.25M	96.6	6.5	69.1	10	5.5	2.5	19	12	M14x1.5	10	24	26.1	53.5	4	12.4	10	15.5
SCK-00-0.5M	111.4	6.5	77.9	11	8	2.9	27	16	M20x1.5	13.5	33	33	60.8	5	17	12	17.5
SCK-00-1.0M	161.6	7.7	109.9	13	10	2.9	32	22	M27x3.0	19.5	39	50.5	90.3	6	24	15	22

LCM
LCR
LCG
LCW
LCX
STM
STG
STS/STL
STR2
UCA2
ULK*
JSK/M2
JSG
JSC3/JSC4
USSD
UFCD
USC
UB
JSB3
LMB
LML
HCM
HCA
LBC
CAC4
UCAC2
CAC-N
UCAC-N
RCS2
RCC2
PCC
SHC
MCP
GLC
MFC
BBS
RRC
GRC
RV3*
NHS
HRL
LN
Hand
Chuk
MecHnd/Chuk
ShkAbs
FJ
FK
SpdContr
Ending

Dimensions: Option [flange (mounting bracket)]

● SCK-0.005-**
0.01
0.03

Flange (FA)

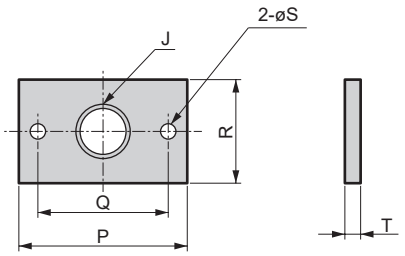

Stop nut (N1)

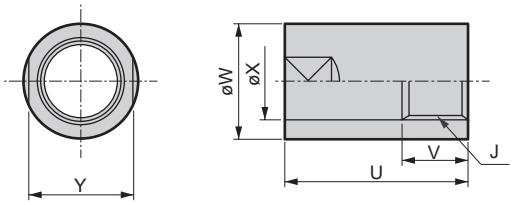

● SCK-0.3 to 60, 0.25M to 1.0M-**
(Screw pitch large)

Flange (FA)

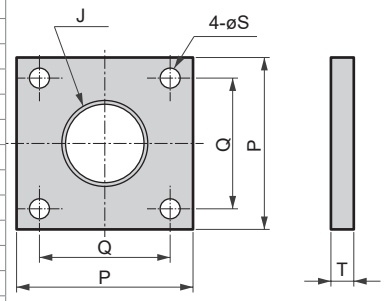

Stop nut (N1)

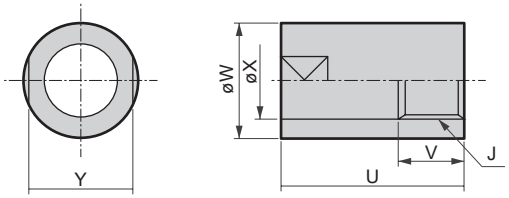

Code	Flange (FA)						Weight	Stop nut (N1)						Weight
Model No.	J	P	Q	R	S	T	(g)	J	U	V	W	X	Y	(g)
SCK-0.005-**	M10x1.0	42	30	20	5.5	2.3	14	M10x1.0	17	10	15	11	13	12
SCK-0.01-**	M12x1.0	46	34	20	5.5	3.6	22	M12x1.0	23	10	19	13	17	19
SCK-0.03-**	M16x1.0	52	40	32	5.5	4.5	51	M16x1.0	23	10	22	17	19	30
SCK-0.3-**	M20x1.0	52	38	-	6.5	6	107	M20x1.0	32.5	15	26	21	24	52
SCK-0.6-**	M20x1.0	52	38	-	6.5	6	107	M20x1.0	32.5	15	26	21	24	52
SCK-1.2-**	M25x1.5	52	38	-	6.5	6	100	M25x1.5	35	15	32	26	30	82
SCK-2.6-**	M25x1.5	52	38	-	6.5	6	100	M25x1.5	35	15	32	26	30	82
SCK-6.5-**	M30x1.5	66	48	-	8.5	6	163	M30x1.5	40	15	40	31	36	162
SCK-8-**	M30x1.5	66	48	-	8.5	6	163	M30x1.5	40	15	40	31	36	162
SCK-12-**	M40x1.5	84	64	-	10.5	9	390	M40x1.5	69.5	20	50	41	46	362
SCK-20-**	M40x1.5	84	64	-	10.5	9	390	M40x1.5	69.5	20	50	41	46	362
SCK-30-**	M40x1.5	84	64	-	10.5	9	390	M40x1.5	69.5	20	50	41	46	362
SCK-40-**	M40x1.5	84	64	-	10.5	9	390	M40x1.5	69.5	20	50	41	46	362
SCK-60-**	M45x1.5	84	64	-	10.5	9	390	M45x1.5	70	20	60	46	55	649
SCK-0.25M-**	M14x1.5	52	38	-	6.5	6	115	M14x1.5	26.5	10	20	15	17	30
SCK-0.5M-**	M20x1.5	52	38	-	6.5	6	108	M20x1.5	36.5	15	26	21	24	59
SCK-1.0M-**	M27x3.0	52	38	-	6.5	6	106	M27x3.0	45.5	15	35	28	32	134

Example of shock absorber

1 Special index table

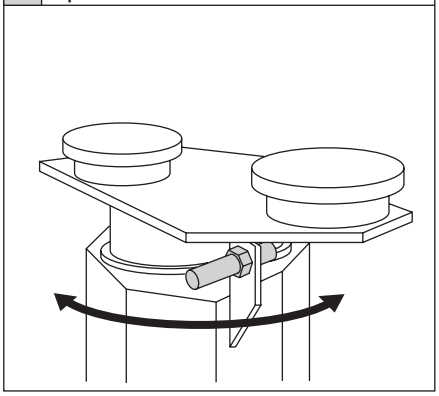

If used for special indexing tables such as wheel rim welding, etc., the index time can be reduced without damaging the machine.

2 Robot

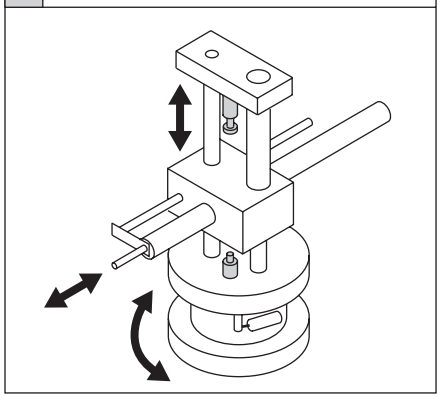

This absorbs the impact caused by the movement of various parts, and prevents damage to parts. Furthermore, production speed can be improved.

3 Switching (directional switching)

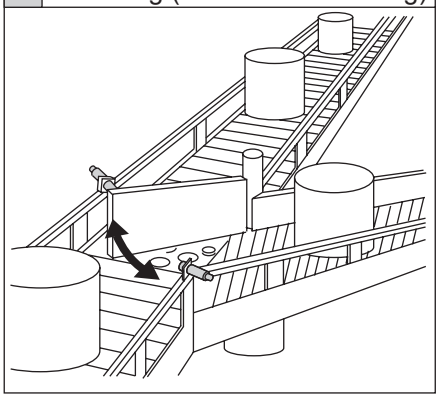

When used for defective parts inspection and sorting for shipping, this mechanism absorbs the gate bound impact and prevents damage to pneumatic cylinders, etc.

4 Rollover

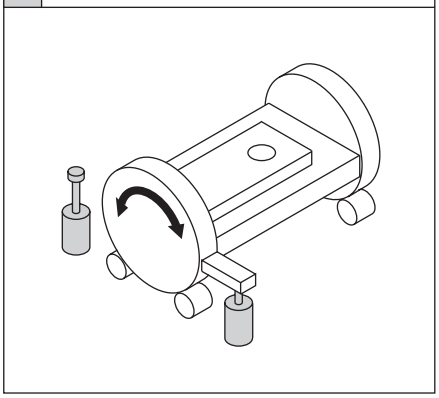

Can be used for automatic turn-over mechanism for parts after machining and welding, etc. Reduces wear and extends the service life of driving parts such as the drive, gears, pinion, etc.

5 Press supply

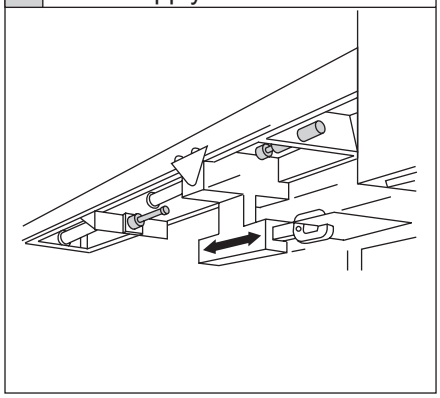

Can be used with feeding mechanisms for parts leading to press machine dies (molds, stamps). Without reducing the supply speed of pneumatic cylinders, etc., the deceleration effects suited for the parts can be attained.

6 Core mold

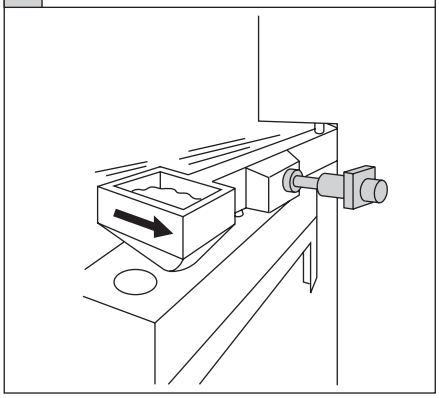

Can be used to stop the swing arm in the process that injects sand model material. This also increases cycles per unit time and supports increases in production.

LCM
LCR
LCG
LCW
LCX
STM
STG
STS/STL
STR2
UCA2
ULK*
JSK/M2
JSG
JSC3/JSC4
USSD
UFCD
USC
UB
JSB3
LMB
LML
HCM
HCA
LBC
CAC4
UCAC2
CAC-N
UCAC-N
RCS2
RCC2
PCC
SHC
MCP
GLC
MFC
BBS
RRC
GRC
RV3*
NHS
HRL
LN
Hand
Chuk
MecHnd/Chuk
ShkAbs
FJ
FK
SpdContr
Ending

Selection guide

Setting working conditions

Make the following conditions clear for shock absorber selection.

(1) Load weight (kg)
(2) Instantaneous colliding speed of impact with shock absorber(m/s)
(3) Thrust (kgf) if there is external pressure with load

Code

D = Cylinder diameter (mm)
E = Kinetic energy (J)
P = Operation pressure (MPa)
K = Radius of rotation (m) (distance of load center to center of rotation)
ω = Colliding angular speed (rad/s)
I = Moment of inertia (kg/m^2)
F = Thrust (N)
T = Torque (N·m)
V = Colliding speed (m/s)
H = Height (m)
St = Shock absorber stroke (m)
M = Weight of workpiece (kg)
g = Gravity acceleration 9.8 m/s^2

Example of calculation

(1) Vertical falling motion (free fall)

$$E = \frac{1}{2}\cdot M\cdot V^2 + Mg\cdot St$$

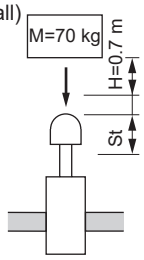

Where weight (M) of workpiece is 70 kg and vertical fall is from 0.7 m (H), check if SCK-00-60 can be used.

Find the max. colliding speed under these conditions.

$V=\sqrt{2\cdot g\cdot H}=\sqrt{19.6 \times H}$

$V=\sqrt{19.6 \times 0.7} = 3.7$ m/s < 4 m/s

(SCK-00-60)

$E=\frac{1}{2}\times 70\times 3.7^2+70\times 9.8\times 0.07=527.2$

Absorbed energy of SCK-00-60 is larger according to colliding speed characteristics graph of absorbed energy on Graph 1. Therefore, energy can be absorbed by SCK-00-60.

(2) Horizontal motion (inertia motion)

$$E = \frac{1}{2}\cdot M\cdot V^2$$

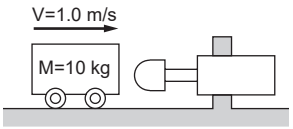

With workpiece weight (M) of 10 kg for colliding speed (V)
At 1.0m/s,

$E = \frac{1}{2} \times 10 \times (1.0)^2 = 5.0$J

SCK-00-1.2 can be used.

(3) Horizontal motion (for thrust)

$$E = \frac{1}{2}\cdot M\cdot V^2 + F\cdot St$$

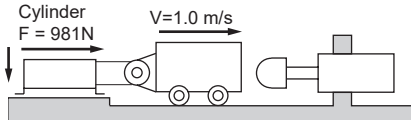

If the workpiece calculated in (2) is moved by a ø50 mm pneumatic cylinder (D)with pneumatic pressure (P) of 0.5 MPa, pneumatic cylinder thrust is:

$F = \frac{\pi}{4} \times D^2 \times P = \frac{\pi}{4} \times 50^2 \times 0.5 = 981$N

Check if SCK-00-6.5 can be used.

$E=\frac{1}{2}\times 10\times(1.0)^2+981\times 0.025$

≈ 29.5

Therefore, energy can be absorbed by SCK-00-6.5.

(4) Tilted falling motion

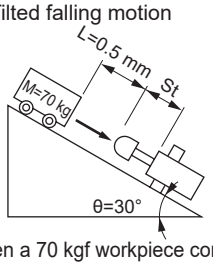

$E=(\frac{1}{2}MV^2)+(Mg\cdot St\cdot \sin\theta)$

When a 70 kgf workpiece comes down a 30° slope, consider if the SCK-00-40 can be used. Find the max. colliding speed under the same conditions.

$V=\sqrt{19.6xH}$ (H=0.5xsin30°)

$=\sqrt{19.6x0.5xsin30°}$

= 2.2 m/s < 3 m/s

$E=(\frac{1}{2}\times 70\times 2.2^2)+(70\times 9.8\times 0.07\times \sin 30°)$

≈ 193.4 J

Therefore, energy can be absorbed by SCK-00-20.

(5) Horizontal rotary motion (inertia motion)

$$I=WK^2$$
$$E=\frac{1\cdot\omega^2}{2}$$

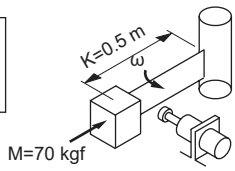

When a 70 kgf workpiece with a radius of rotation (K) 0.5 m and colliding angular speed of 1 rad/s is being operated, consider if the SCK-00-1.2 can be used.

$I = 70 \times (0.5)^2 = 17.5$ kg·m^2

$E=\frac{(1)^2}{2}=\frac{17.5\times(1)^2}{2}$

=8.8 J

Therefore, energy can be absorbed by SCK-00-1.2.

(Graph 1)

Vp·E max. characteristics (colliding speed/absorbed energy)

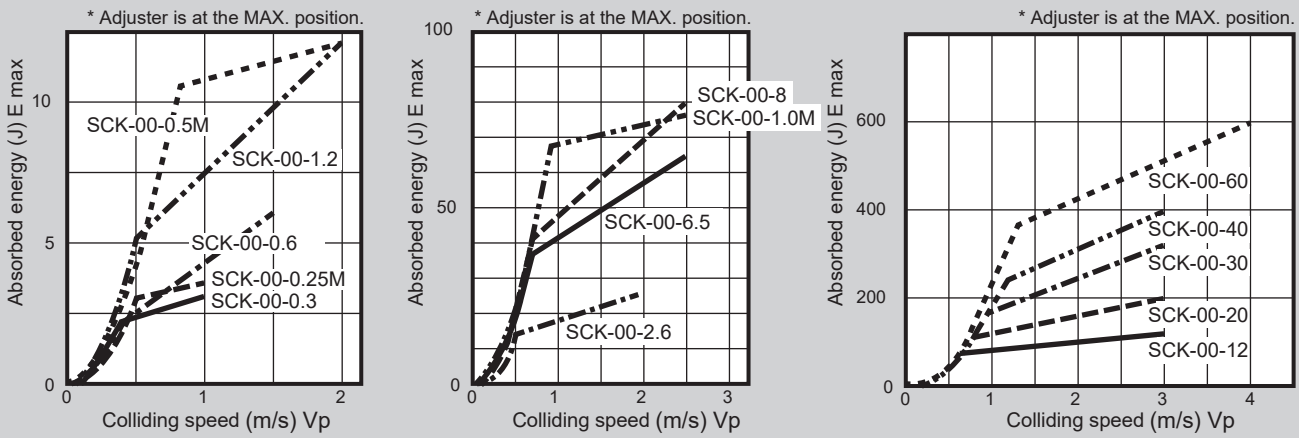

* Absorption energy drops at low speed.

FCK

Shock absorber/adjustable

Related products

Overview

An extensive product lineup of 32 types is available in three levels: low speed of 1 m/s, medium speed of 2 m/s, and high speed of 3 m/2. Shock absorbers allow selection of the ideal model.

CONTENTS

Series variation	1891
Product introduction	1922
● FCK-L low speed (max. absorbed energy 1.5 to 79.3 J)	1924
● FCK-M medium speed (max. absorbed energy 1.8 to 720 J)	1924
● FCK-H high speed (max. absorbed energy 1.8 to 720 J)	1924
Optional parts (stopper nut, deflection angle adaptor)	1930
Selection guide	1932
⚠Safety precautions	1941

Choose from low, medium and high speeds.

Three entry velocities and three types of structure

Low speed : Single hole orifice structure,
Medium speed : Porous irregular orifice structure,
High speed : Porous orifice structure
Energy absorption performance is optimized to the entry velocity.

With rotation-stop function

A lock screw prevents incorrect adjustment during use. (Not available in some compact models)

Easy to install with external threads

External threads with nuts of M10 to M27 for low speed and M10 to M42 for medium/high speeds.
Installation and position adjustment is easy.

Select whether to include a cap. (except for some sizes)

High-efficiency threading

An externally threaded outer pipe has a large surface area and efficiently releases heat.

Industrial chrome plated piston rod

-5 to 70°C Usable

Can be used in a wide temperature range with special oil.

Easy adjustment

An adjuster adjusts the impact energy absorption performance according to the impact condition.

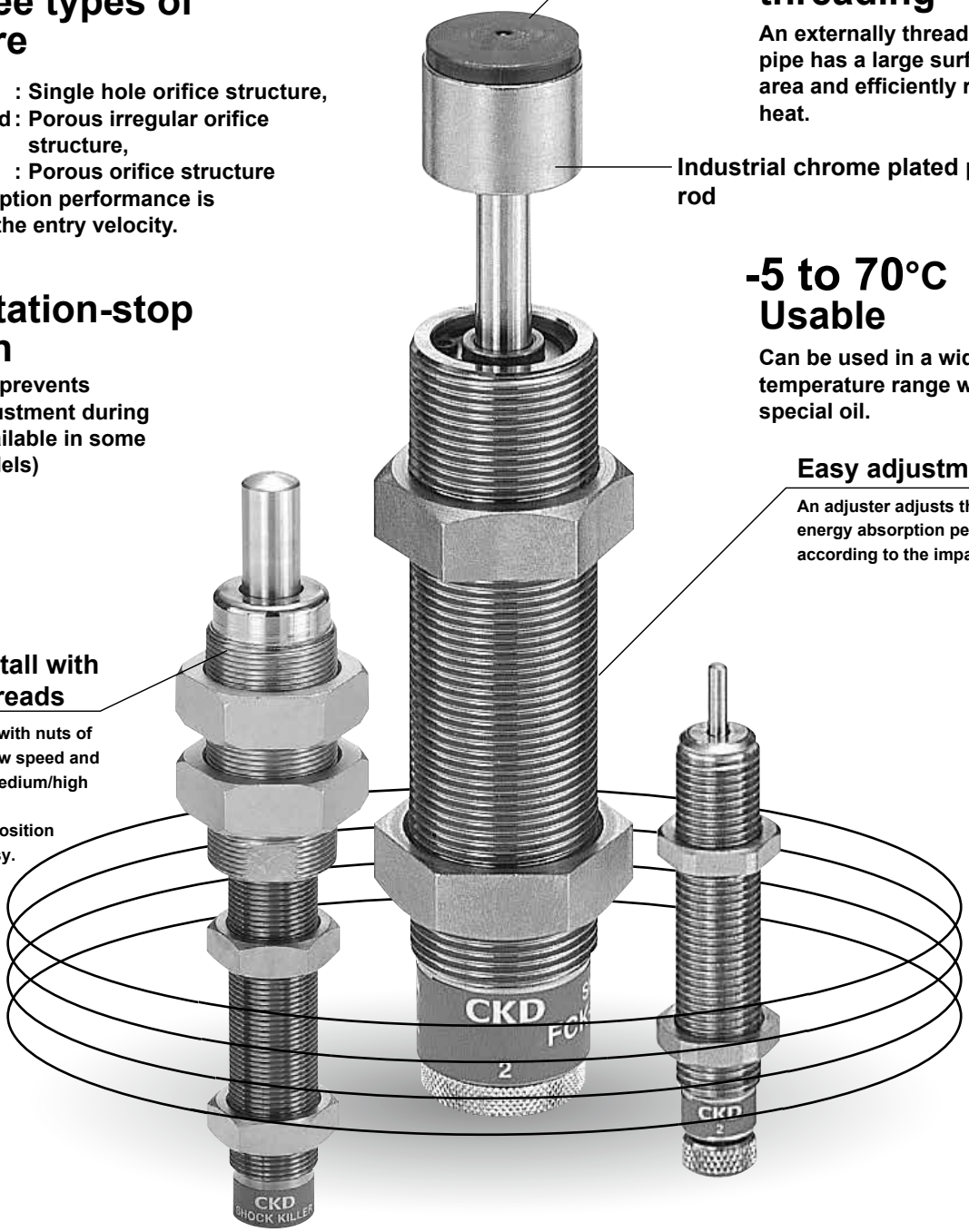

SHOCK

32 New shock absorber models in FCK Series. Optimum selection of energy absorption performance according to the impact condition and characteristics.

0.3 to 1 m/s, 8 models for low speed.

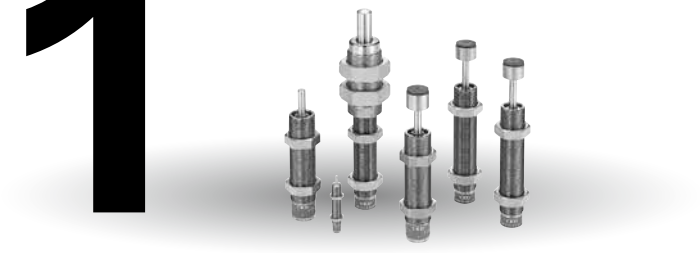

0.3 to 2 m/s, 12 models for medium speed.

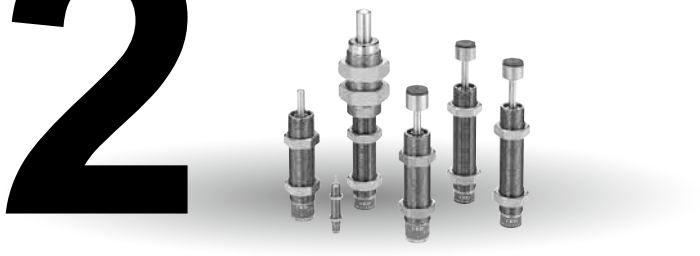

0.7 to 3 m/s, 12 models for high speed.

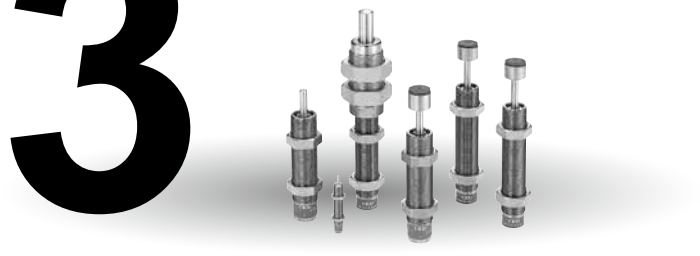

5 benefits of shock absorbers

(1) Safely stops the colliding object.
(2) Shortens the manufacturing cycle time.
(3) Improves the service life of machinery.
(4) Reduces noise and improves the environment around machinery.
(5) Prevents failure of machinery.

ABSORBER

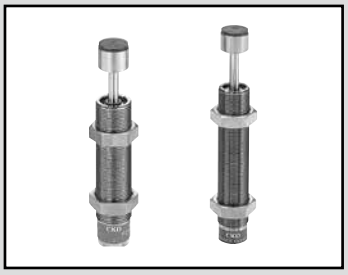

Shock absorber

FCK Series

• Max. energy absorption: 1.5 to 720 J

RoHS CAD

Specifications

Item			FCK														
Series			0.15	0.18	0.3	0.5	0.4	0.6	1	3	5	6.5	8.1	20	40	45	73.5
Type/Classification			Spring return with adjuster														
Max. energy absorption		J	1.5	1.8	2.9	4.9	3.9	5.9	9.8	29.4	49	63.7	79.3	196	392	441	720
O.D. thread size		mm	M10×1.0		M12×1.0		M14×1.5		M16×1.5	M20×1.5	M25×1.5		M27×1.5	M30×1.5	M36×1.5	M42×1.5	
Stroke length		mm	8		10				12	16	30	40	25	35	50		80
Max. absorbed energy per hour		kJ/hr	3.5		5.9		8.8		14.1	20.6	29.4	38.2	32.3	70.5	141.1	164.6	264.6
Max. colliding speed	L	m/s	0.3 to 1	—	0.3 to 1	—	0.3 to 1	—	0.3 to 1					—	—	—	—
	M	m/s	—	0.3 to 2	—	0.3 to 2	—	0.3 to 2	0.3 to 2					0.3 to 2			
	H	m/s	—	0.7 to 3	—	0.7 to 3	—	0.7 to 3	0.7 to 3					0.7 to 3			
Max. operating frequency (20°C)		Cycle/min.	60											30		10	6
Ambient temperature		°C	-5 (23°F) to 70 (158°F)														
Max. load (resistance)	L	N	637		1,470		1,813		2,646	4,900			6,370	16,660	23,520	27,028	
	M	N								3,528	3,920						
	H	N															
Return time		S	0.5 or less											1 or less		2 or less	
Weight	Without cap	g	26.5		44		68		108	180	406	—	411	710	1300	—	—
	With cap	g	27		47		73		117	202	436	459	460	760	1410	1560	2010
Return spring force	When extended	N	2.9		4.9		4.5		5.4	12.0	16.6	23.8	16.2	19.6	22.5	24.5	
	When compressed	N	5.9		9.8				14.7	18.0	33.1	71.4	27.2	44.1	68.6	83.3	98.0

Operational principle

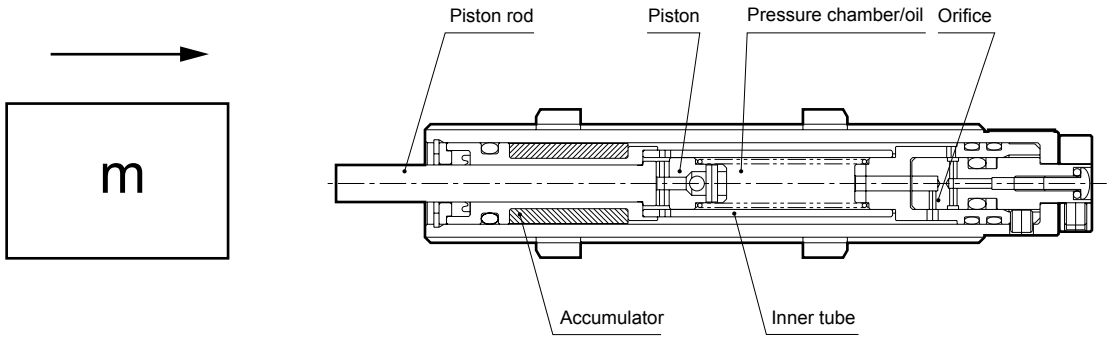

If an object collides with the piston rod, that action is transmitted to the oil in the pressure chamber enclosed by the piston and inner tube.
Oil in pressure chamber flows out from orifice provided in inner tube.
Resistance F shown by following formula occurs at that time.
$F = av^2 + bv + cx$ (v is colliding speed, and x is moving stroke. a, b, and c are constants.)

No. 1 shows the speed square resistance, which is a significant part of the resistance as a whole.
No. 2 shows the viscosity resistance, which is a significant part of the resistance if the colliding speed is low.
Item 3 shows return force of piston rod. (Can usually be ignored, as the value is miniscule compared to Items 1 and 2.)
The product of resistance generated at this time and the piston rod stroke is the shock absorber absorption energy.
The shock absorber realizes ideal impact absorption by controlling Items 1 and 2.

How to order

● Low speed

FCK-L - 0.15 - C

● Medium speed

FCK-M - 0.18 - C

● High speed

FCK-H - 0.18 - C

Ⓐ Model No.

Ⓑ Series (max. energy absorption)

Ⓒ Option *1

Code	Description	Ⓐ Model No. Low speed FCK-L	Medium speed FCK-M	High speed FCK-H
Ⓑ Series (max. energy absorption)				
0.15	1.5 J	●		
0.18	1.8 J		●	●
0.3	2.9 J	●		
0.4	3.9 J	●		
0.5	4.9 J		●	●
0.6	5.9 J		●	●
1	9.8 J	●	●	●
3	29.4 J	●	●	●
5	49 J	●	●	●
6.5	63.7 J	●	●	●
8.1	79.3 J	●	●	●
20	196 J		●	●
40	392 J		●	●
45	441 J		●	●
73.5	720 J		●	●
Ⓒ Option				
Blank	Without cap	●	●	●
C	Capped	●	●	●

* 1: No cap is not available for 6.5 (63.7 J), 45 (441 J), 73.5 (720 J).

is not available.

[Example of model No.]

FCK-M-0.18-C

Ⓐ Model No. : Shock absorber medium speed
Ⓑ Series : Max. energy absorption 1.8 J
Ⓒ Option : Capped

Specifications for rechargeable battery (Catalog No. CC-1226A)

FCK - ··· - P4*

● Design compatible with rechargeable battery manufacturing process

* Contact CKD for details.

LCM
LCR
LCG
LCW
LCX
STM
STG
STS/STL
STR2
UCA2
ULK*
JSK/M2
JSG
JSC3/JSC4
USSD
UFCD
USC
UB
JSB3
LMB
LML
HCM
HCA
LBC
CAC4
UCAC2
CAC-N
UCAC-N
RCS2
RCC2
PCC
SHC
MCP
GLC
MFC
BBS
RRC
GRC
RV3*
NHS
HRL
LN
Hand
Chuk
MecHnd/Chuk
ShkAbs
FJ
FK
SpdContr
Ending

Internal structure and parts list

● FCK-*-*

Basic (without cap)

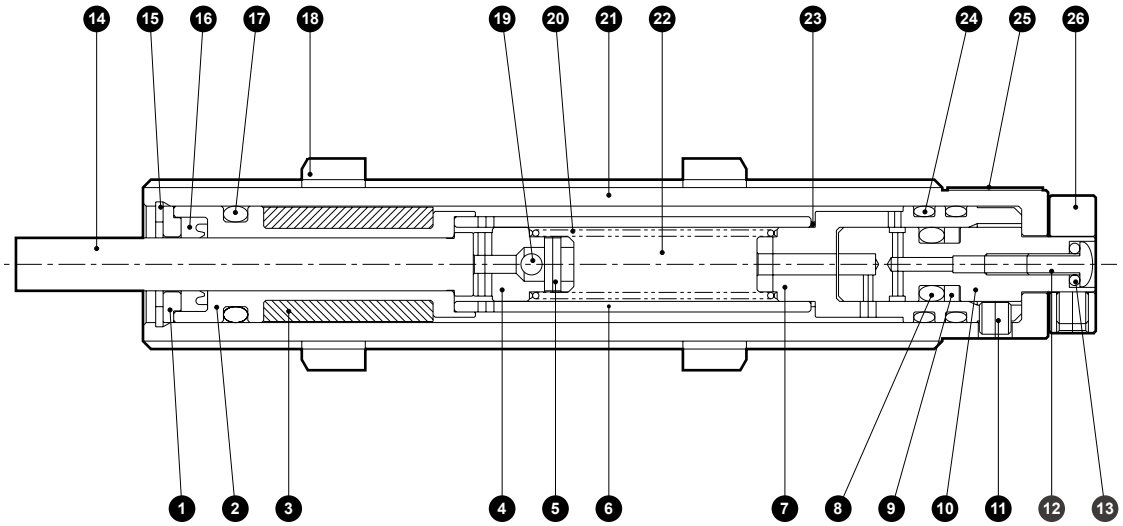

Capped

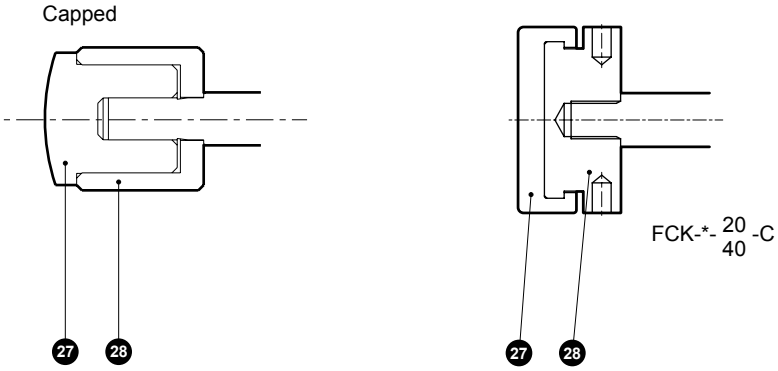

Cannot be disassembled

Parts list

No.	Part name	Material	No.	Part name	Material
1	Packing seal retainer	Copper alloy	15	Snap ring	Steel
2	Guide	Copper alloy	16	U packing	Nitrile rubber
3	Accumulator	Nitrile rubber	17	O-ring	Nitrile rubber
4	Piston	Copper alloy	18	Hexagon nut	Steel
5	Spring pin	Stainless steel	19	Steel ball	Bearing steel
6	Inner tube	Steel	20	Spring	Piano wire
7	Bottom	Copper alloy	21	Outer tube	Steel
8	O-ring	Nitrile rubber	22	Oil	Oil
9	Back up ring	Resin	23	Spacer	Nitrile rubber
10	Adjusting shaft	Copper alloy	24	O-ring	Nitrile rubber
11	Hexagon socket set screw	Alloy steel	25	Product name plate	
12	Cross-recessed set screw	Alloy steel	26	Knob	Copper alloy
13	O-ring	Nitrile rubber	27	Rod cap	Resin *2
14	Piston rod	Alloy steel	28	Reinforcement ring	Steel

*1: Structures differ to some extent by model.
*2: For sizes 20 and 40, urethane rubber is used.

Internal structure and parts list

6.5
● FCK-*- 45 -C (Capped)
73.5

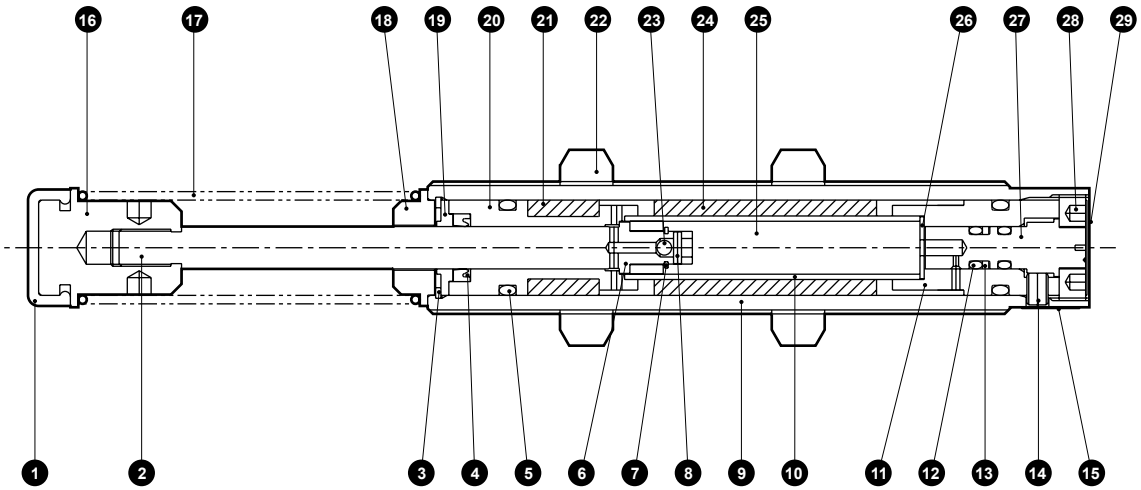

Cannot be disassembled

Parts list

No.	Part name	Material	No.	Part name	Material
1	Rod cover	Urethane rubber (*2)	16	Spring guide	Steel
2	Piston rod	Alloy steel	17	Spring	Piano wire
3	Snap ring (round R)	Steel	18	Spring guide	Steel
4	U packing	Nitrile rubber	19	Packing seal retainer	Copper alloy
5	O-ring	Nitrile rubber	20	Guide	Copper alloy
6	Piston	Copper alloy	21	Accumulator	Nitrile rubber
7	Snap ring (E)	Steel	22	Hexagon nut	Steel
8	Spring pin	Stainless steel	23	Steel ball	Bearing steel
9	Outer tube	Steel pipe	24	Accumulator	Nitrile rubber
10	Inner tube	Steel pipe	25	Oil	Oil
11	Bottom	Copper alloy	26	Washer	Steel
12	O-ring	Nitrile rubber	27	Adjusting shaft	Copper alloy
13	Back up ring	Resin	28	Holding screw	Steel
14	Hexagon socket set screw	Alloy steel	29	Label for adjustment	Steel
15	Product name plate				

*1: Structures differ to some extent by model.
*2: The rod cover (resin) cap cannot be attached to the 45 and 73.5 sizes.

LCM
LCR
LCG
LCW
LCX
STM
STG
STS/STL
STR2
UCA2
ULK*
JSK/M2
JSG
JSC3/JSC4
USSD
UFCD
USC
UB
JSB3
LMB
LML
HCM
HCA
LBC
CAC4
UCAC2
CAC-N
UCAC-N
RCS2
RCC2
PCC
SHC
MCP
GLC
MFC
BBS
RRC
GRC
RV3*
NHS
HRL
LN
Hand
Chuk
MecHnd/Chuk
ShkAbs
FJ
FK
SpdContr
Ending

Dimensions

● Standard (FCK-*-*)

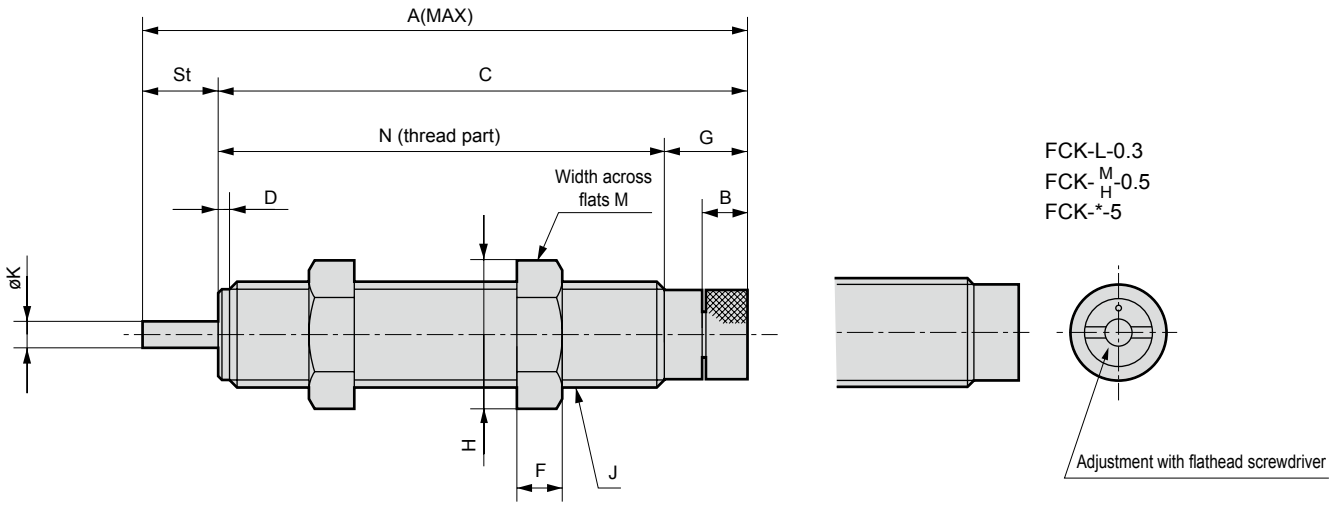

● Capped (FCK-*-*-C)

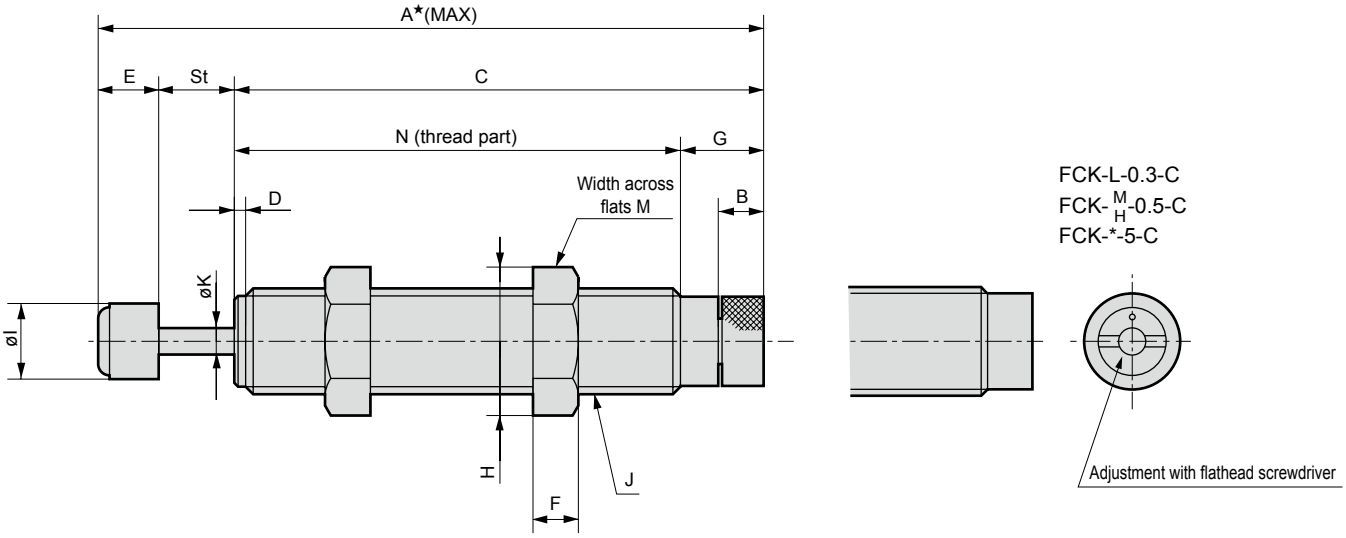

Model No.	A	A★	B	C	St	D	E	F	G	H	I	J	K	N	M
FCK-L-0.15 FCK- M/H -0.18	58.9	65.2	3.5	50.9	8	1.5	6.3	3	8.7	14.2	6	M10×1	2.4	42.2	13
FCK-L-0.3 FCK- M/H -0.5	76	84	—	66	10	1.5	8	4	5	16.2	8	M12×1	3.5	61	14
FCK-L-0.4 FCK- M/H -0.6	80	88	6	70	10	1.5	8	6	11	19.6	10	M14×1.5	3.5	59	17
FCK-*-1	102	117	4.5	90	12	—	15	6	14.5	20	13.5	M16×1.5	5	75.5	19
FCK-*-3	110	127	4	94	16	—	17	8	18	27.7	18	M20×1.5	6	76	24
FCK-*-5	155	173	—	125	30	—	18	10	15	37	22	M25×1.5	8	110	32
FCK-*-8.1	136	156	5	111	25	—	20	10	20	37	24	M27×1.5	8	91	32
FCK- M/H -20	188	206.5	5	153	35	—	18.5	14	25	41.6	27	M30×1.5	10	128	36
FCK- M/H -40	235	254.5	5	185	50	—	19.5	15	25	53.1	33	M36×1.5	12	160	46

Note: The above table * shows low speed (L), medium speed (M), and high speed (H).

Dimensions

6.5
● FCK-*- 45 -C
73.5

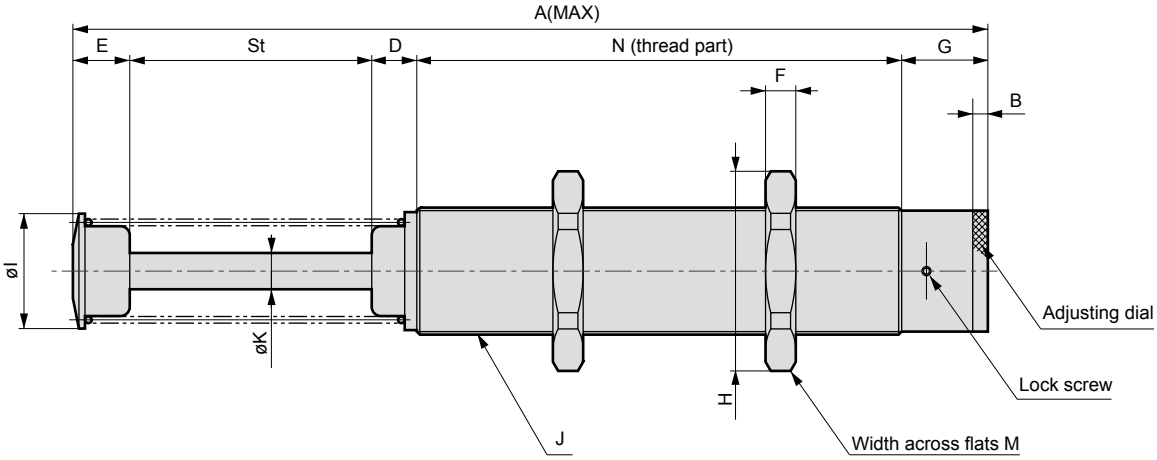

FCK-*-6.5-C
FCK-$^{M}_{H}$-45-C

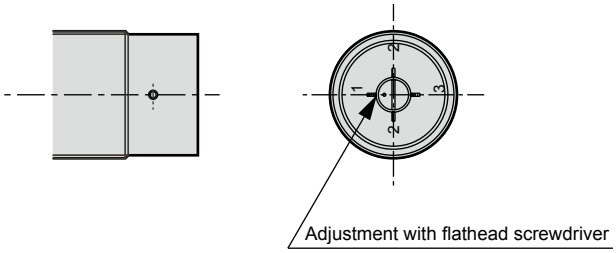

Model No.	A	B	St	D	E	F	G	H	I	J	K	N	M
FCK-*-6.5-C	200.5	-	40	6.5	29	10	15	37	22	M25×1.5	8	110	32
FCK-$^{M}_{H}$-45-C	212.5	-	50	7	19	25	23	66	38	M42×1.5	12	113.5	60
FCK-$^{M}_{H}$-73.5-C	302.5	5	80	15	19	25	28.5	66	38	M42×1.5	12	160	60

Note: The above table * shows low speed (L), medium speed (M), and high speed (H).

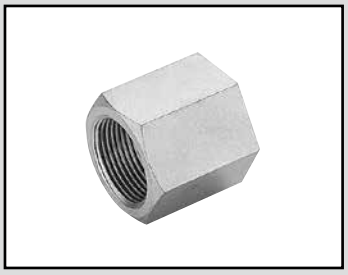

Shock absorber **FCK Series** Option parts

FCK-*-N1/FCK-*-C-N1

(Stopper nut)

RoHS CAD

Dimensions

CAD

● FCK-*-N1 (for standard)
Material: Steel

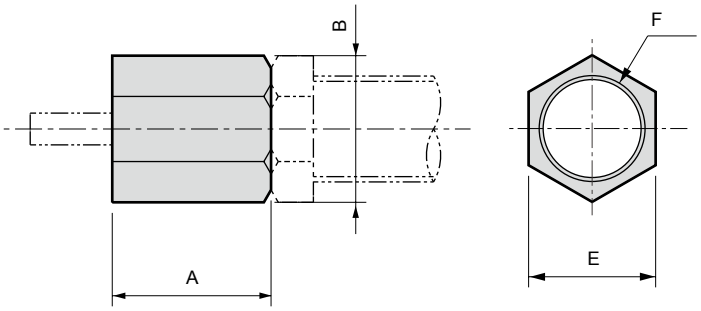

● FCK-*-C-N1 (for capped)
Material: Steel

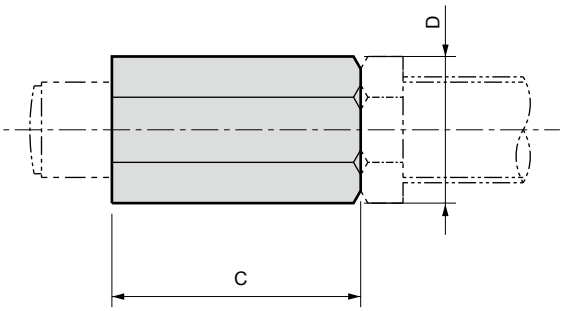

(For standard)

Model No.	Compatible model	A	B	Weight (g)
FCK-0.18-N1	FCK-L-0.15 FCK-M-0.18 FCK-H-0.18	10	15	5
FCK-0.5-N1	FCK-L-0.3 FCK-M-0.5 FCK-H-0.5	12	16.2	5
FCK-0.6-N1	FCK-L-0.4 FCK-M-0.6 FCK-H-0.6	12	19.6	9
FCK-1-N1	FCK-L-1 FCK-M-1 FCK-H-1	15	21.9	13
FCK-3-N1	FCK-L-3 FCK-M-3 FCK-H-3	30	27.7	43
FCK-5-N1	FCK-L-5 FCK-M-5 FCK-H-5	20	37	62
FCK-8.1-N1	FCK-L-8.1 FCK-M-8.1 FCK-H-8.1	35	37	86
FCK-20-N1	FCK-M-20 FCK-H-20	38	41.6	123
FCK-40-N1	FCK-M-40 FCK-H-40	45	53.1	286

(For capped type)

Model No.	Compatible model	C	D	E	F	Weight (g)
FCK-0.18-C-N1	FCK-L-0.15-C FCK-M-0.18-C FCK-H-0.18-C	16	15	13	M10×1	8
FCK-0.5-C-N1	FCK-L-0.3-C FCK-M-0.5-C FCK-H-0.5-C	16	16.2	14	M12×1	7
FCK-0.6-C-N1	FCK-L-0.4-C FCK-M-0.6-C FCK-H-0.6-C	20	19.6	17	M14×1.5	15
FCK-1-C-N1	FCK-L-1-C FCK-M-1-C FCK-H-1-C	30	21.9	19	M16×1.5	26
FCK-3-C-N1	FCK-L-3-C FCK-M-3-C FCK-H-3-C	47	27.7	24	M20×1.5	68
FCK-5-C-N1	FCK-L-5-C FCK-M-5-C FCK-H-5-C	32	37	32	M25×1.5	99
FCK-6.5-C-N1	FCK-L-6.5-C FCK-M-6.5-C FCK-H-6.5-C	50	37	32	M25×1.5	154
FCK-8.1-C-N1	FCK-L-8.1-C FCK-M-8.1-C FCK-H-8.1-C	55	37	32	M27×1.5	135
FCK-20-C-N1	FCK-M-20-C FCK-H-20-C	58	41.6	36	M30×1.5	188
FCK-40-C-N1	FCK-M-40-C FCK-H-40-C	65	53.1	46	M36×1.5	413

1 When using stopper nut, note the following points.

- For types without cap, attach the stopper nut so that it protrudes 0.1 mm to 1 mm outward along the piston rod from the shock absorber body (cylinder top).
  For capped types, attach the stopper nut so that it protrudes 0.5 mm to 1 mm plus the cap length outward along the piston rod from the shock absorber body (cylinder section).
- Fix with the standard nut for shock absorber after installing the stopper nut.
- Cannot be used with a deflection angle adaptor.

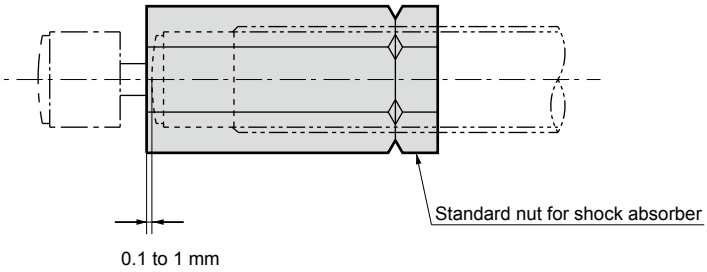

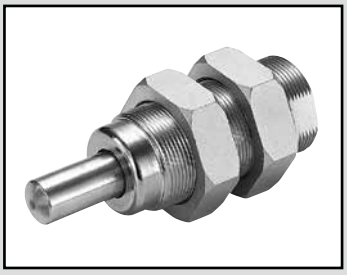

Shock absorber **FCK Series** Option parts

FCK-*-A

(Deflection angle adaptor)

RoHS CAD

Specifications

Max. working deflection angle ± 10°

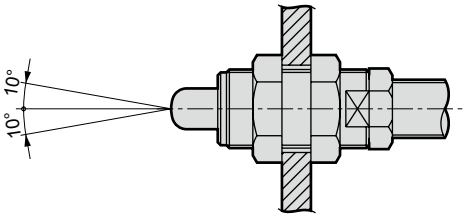

Dimensions

CAD

● FCK-*-A

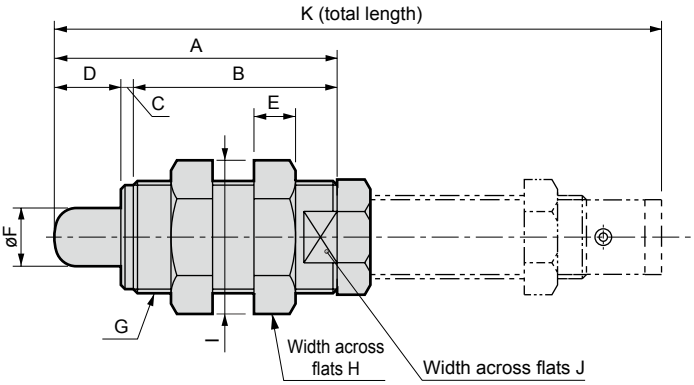

Model No.	Compatible model	A	B	C	D	E	F	G	H	I	J	K	End section material	Weight (g)
FCK-0.18-A	FCK-L-0.15 FCK-M-0.18 FCK-H-0.18	38	28	2	8	6	8	M16×1.5	19	20	13	75.7	Plastic (POM)	37
FCK-0.5-A	FCK-L-0.3 FCK-M-0.5 FCK-H-0.5	48	35	3	10	5	10	M18×1.5	21	24.3	14	97.8		49
FCK-0.6-A	FCK-L-0.4 FCK-M-0.6 FCK-H-0.6	51	38	3	10	7	11	M22×1.5	24	27.7	19	103		83
FCK-1-A	FCK-L-1 FCK-M-1 FCK-H-1	60	45	3	12	7	12	M22×1.5	24	27.7	19	129		81
FCK-3-A	FCK-L-3 FCK-M-3 FCK-H-3	68	49	3	16	10	14	M27×1.5	32	37	24	146	Iron	214
FCK-5-A	FCK-L-5 FCK-M-5 FCK-H-5	107.5	67.5	10	30	15	16	M36×1.5	46	53.1	32	212		630
FCK-8.1-A	FCK-L-8.1 FCK-M-8.1 FCK-H-8.1	97	62	10	25	15	16	M36×1.5	46	53.1	32	188		582
FCK-20-A	FCK-M-20 FCK-H-20	127	82	10	35	15	18	M40×1.5	50	57.7	36	255		838
FCK-40-A	FCK-M-40 FCK-H-40	167	107	10	50	15	20	M45×1.5	55	63.5	41	322		1265

1 When using deflection angle adaptor, note the following points.

- Keep the angle within ±10° of the center line of the deflection angle adaptor cap.
- Cannot be used with stopper nut.
- Cannot be used with capped.

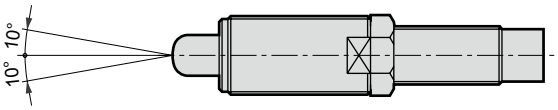

LCM
LCR
LCG
LCW
LCX
STM
STG
STS/STL
STR2
UCA2
ULK*
JSK/M2
JSG
JSC3/JSC4
USSD
UFCD
USC
UB
JSB3
LMB
LML
HCM
HCA
LBC
CAC4
UCAC2
CAC-N
UCAC-N
RCS2
RCC2
PCC
SHC
MCP
GLC
MFC
BBS
RRC
GRC
RV3*
NHS
HRL
LN
Hand
Chuk
MecHnd/Chuk
ShkAbs
FJ
FK
SpdContr
Ending

Selection guide flow chart

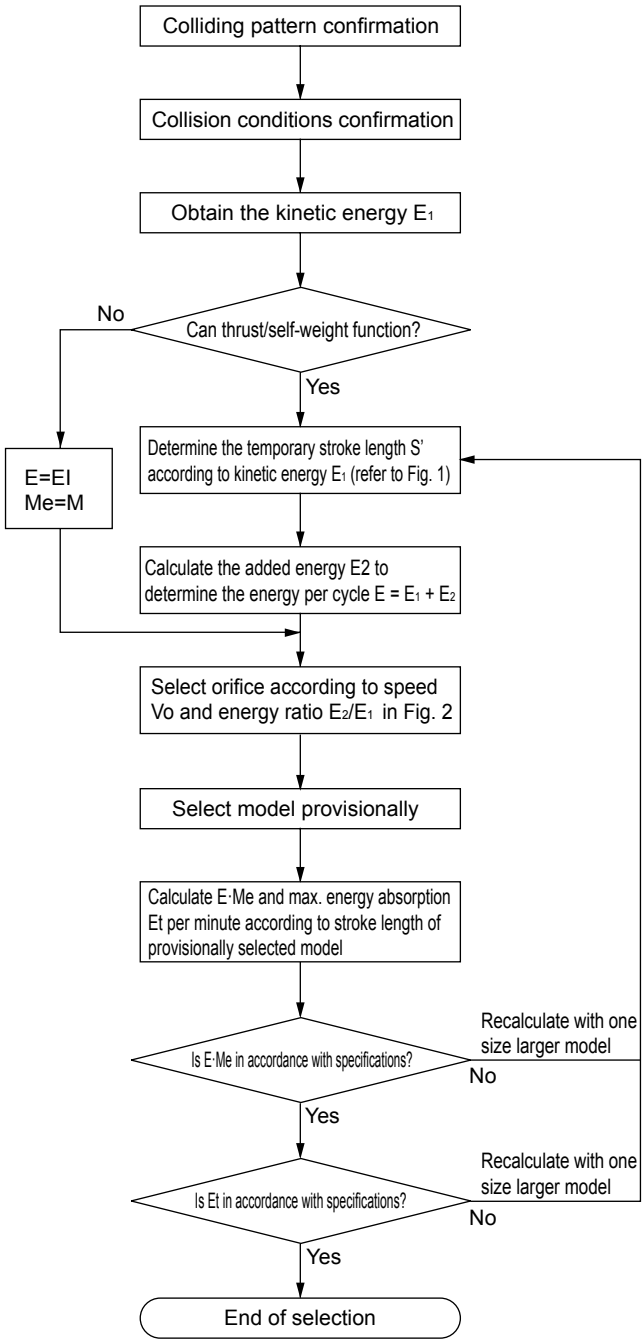

Code	Working conditions	Unit
E	Absorbed energy	J
E_1	Kinetic energy	J
E_2	Thrust/self-weight energy	J
G	Position of center of gravity	
S	FCK stroke length	m
g	Gravity acceleration (9.8)	m/s^2
N	Rotation speed	rpm
Me	Equivalent weight	kg
Td	Motor start torque	N·m
K	Reduction ratio	

Example of colliding pattern

	Horizontal colliding		
	a. Simple horizontal colliding	b. With cylinder thrust	c. With motor drive force
Applications	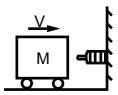	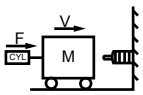	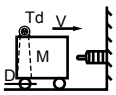
Kinetic energy E_1(J)	$E_1 = \frac{1}{2}\cdot M\cdot V^2$	$E_1 = \frac{1}{2}\cdot M\cdot V^2$	$E_1 = \frac{1}{2}\cdot M\cdot V^2$
Thrust/self energy E_2(J)	–––––	$E_2 = F\cdot S$	$E_2 = 2\cdot \frac{K}{D}\cdot Td\cdot S$
All absorbed energy E(J)	$E=E_1$	$E=E_1+E_2$	$E=E_1+E_2$
Equivalent weight Me (kg)	Me=M	$Me=\frac{2\cdot E}{V^2}$	$Me=\frac{2\cdot E}{V^2}$
Absorbed energy per hour Et(J/h)	$E_t = 60\cdot E\cdot n$	$E_t = 60\cdot E\cdot n$	$E_t = 60\cdot E\cdot n$
	Vertical colliding		
	d. Free fall	e. Cylinder lower limit stopper	f. Cylinder upper limit stopper
Applications	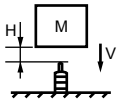	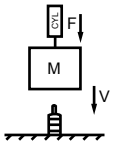	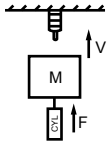
Kinetic energy E_1(J)	$E_1 = \frac{1}{2}\cdot M\cdot V^2$	$E_1 = \frac{1}{2}\cdot M\cdot V^2$	$E_1 = \frac{1}{2}\cdot M\cdot V^2$
Thrust/self energy E_2(J)	$E_2 = M\cdot g\cdot S$	$E_2 = (M\cdot g + F)\cdot S$	$E_2 = (F-M\cdot g)\cdot S$
All absorbed energy E(J)	$E=E_1+E_2$	$E=E_1+E_2$	$E=E_1+E_2$
Equivalent weight Me (kg)	$Me = \frac{2\cdot E}{V^2}(V=\sqrt{2/g/H})$	$Me=\frac{2\cdot E}{V^2}$	$Me=\frac{2\cdot E}{V^2}$
Absorbed energy per hour Et(J/h)	$E_t = 60\cdot E\cdot n$	$E_t = 60\cdot E\cdot n$	$E_t = 60\cdot E\cdot n$
	Slope colliding		
	g. Free fall	h. With cylinder thrust	i. With cylinder thrust
Applications	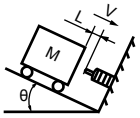	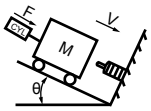	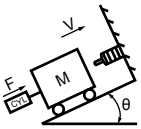
Kinetic energy E_1(J)	$E_1 = \frac{1}{2}\cdot M\cdot V^2$	$E_1 = \frac{1}{2}\cdot M\cdot V^2$	$E_1 = \frac{1}{2}\cdot M\cdot V^2$
Thrust/self energy E_2(J)	$E_2 = M\cdot g\cdot S\cdot \sin\theta$	$E_2 = (M\cdot g\cdot \sin\theta + F)\cdot S$	$E_2 = (F-M\cdot g\cdot \sin\theta)\cdot S$
All absorbed energy E(J)	$E=E_1+E_2$	$E=E_1+E_2$	$E=E_1+E_2$
Equivalent weight Me (kg)	$Me = \frac{2\cdot E}{V^2}(V=\sqrt{2\cdot g\cdot L\cdot \sin\theta})$	$Me=\frac{2\cdot E}{V^2}$	$Me=\frac{2\cdot E}{V^2}$
Absorbed energy per hour Et(J/h)	$E_t = 60\cdot E\cdot n$	$E_t = 60\cdot E\cdot n$	$E_t = 60\cdot E\cdot n$
	Oscillation colliding		**Rotation colliding**
	j. Free fall	k. With torque of motor, etc.	l. With torque of motor, etc.
Applications	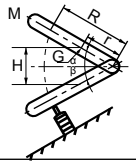	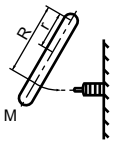	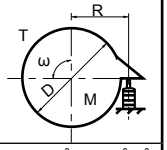
Kinetic energy E_1(J)	$E_1 = M\cdot g\cdot H$	$E_1 = \frac{J\cdot\omega^2}{2}$ or $\frac{1}{2}\cdot M\cdot V^2$	$E_1 = \frac{J\cdot\omega^2}{2} = \frac{M\cdot D^2\cdot\omega^2}{16}$
Thrust/self energy E_2(J)	$E_2 = \frac{r}{R}\cdot M\cdot g\cdot S$	$E_2 = \frac{T}{R}\cdot S$	$E_2 = \frac{T}{R}\cdot S$
All absorbed energy E(J)	$E=E_1+E_2$	$E=E_1+E_2$	$E=E_1+E_2$
Equivalent weight Me (kg)	$Me=\frac{2\cdot E}{V^2}(V=\frac{R}{r}\sqrt{\frac{3\cdot g\cdot H}{2}})$	$Me = \frac{2\cdot E}{V^2}(V=\omega\cdot R)$	$Me = \frac{2\cdot E}{V^2}(V=\omega\cdot R, \omega=\frac{2\pi\cdot N}{60})$
Absorbed energy per hour Et(J/h)	$E_t = 60\cdot E\cdot n$	$E_t = 60\cdot E\cdot n$	$E_t = 60\cdot E\cdot n$

Shock absorber selection guide

1 Clarify the colliding pattern of the device

- Horizontal motion
  - a. Simple horizontal collision
  - b. Collision with cylinder thrust
  - c. Collision with drive force of motor
- Vertical motion
  - d. Collision due to free fall
  - e. Collision with cylinder thrust (downward)
  - f. Collision with cylinder thrust (upward)
- Slope motion
  - g. Collision due to free sliding
  - h. Collision with cylinder thrust (downward)
  - i. Collision with cylinder thrust (upward)
- Oscillation/rotary motion
  - j. Collision due to free oscillating fall
  - k. Collision with motor torque, etc. (oscillation)
  - l. Collision with motor torque, etc. (rotation)

*1: Refer to “Example of colliding pattern”.

Example of selection

Clarifies colliding pattern of device.

Applications	Vertical colliding e. Cylinder lower limit stopper 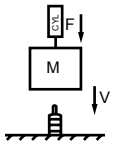
Kinetic energy E_1(J)	$E_1 = \frac{1}{2}\cdot M\cdot V^2$
Thrust/gravity energy E_2(J)	$E_2 = (Mg+F)\cdot S$
All absorbed energy E(J)	$E=E_1+E_2$
Equivalent weight Me(kg)	$Me=\frac{2\cdot E}{V^2}$
Absorbed energy per hour Et(J/h)	$E_t = 60\cdot E\cdot n$

2 Make required conditions/descriptions clear to calculate energy

● Horizontal collision

Code	Working conditions	Unit
M	Colliding object weight	kg
V	Colliding speed	m/s
F	Pushing force	N
n	Frequency	Cycle/min.
t	Ambient temperature	°C
Rt	Return time	s

Vertical colliding

Code	Working conditions	Unit
M	Colliding object weight	kg
V	Colliding speed	m/s
F	Pushing force	N
n	Frequency	Cycle/min.
t	Ambient temperature	°C
Rt	Return time	s
H	Drop height	m

Slope colliding

Code	Working conditions	Unit
M	Colliding object weight	kg
V	Colliding speed	m/s
F	Pushing force	N
n	Frequency	Cycle/min.
t	Ambient temperature	°C
Rt	Return time	s
L	Distance moved from collision	m
θ	Slope angle	deg

Vibration/rotation colliding

Code	Working conditions	Unit
M	Colliding object weight	Kg
V	Colliding speed	m/s
T	Torque	N·m
n	Frequency	Cycle/min.
t	Ambient temperature	°C
Rt	Return time	s
ω	Angular speed	rad/s
J	Moment of inertia	$kg\cdot m^2$
R	Distance of rotational axis to colliding point	m
r	Distance of rotational axis to CG	m
α·β	Slope angle	deg
H	Drop height	m
D	Rotor diameter	m

Colliding object weight : M=15 kg
Colliding speed : V=1.42 m/s
Pushing force : F=245.5N
Frequency : n = 10 cycle/min.
Ambient temperature : t=23°C
Return time : Rt = 2s (time up to re-collision)

3 Calculate kinetic energy E_1 according to “Example of colliding pattern”

● Calculate kinetic energy E_1 according to “Example of colliding pattern” (page 1932).

$$E = \frac{1}{2}M\cdot V^2 = \frac{1}{2} \times 15 \times 1.42^2$$
$$=15.1\ J$$

4 Select temporary stroke length according to temporary selection graph

● From Fig. 1 (page 1935), select the temporary stroke length.

S’ = 30

LCM
LCR
LCG
LCW
LCX
STM
STG
STS/STL
STR2
UCA2
ULK*
JSK/M2
JSG
JSC3/JSC4
USSD
UFCD
USC
UB
JSB3
LMB
LML
HCM
HCA
LBC
CAC4
UCAC2
CAC-N
UCAC-N
RCS2
RCC2
PCC
SHC
MCP
GLC
MFC
BBS
RRC
GRC
RV3*
NHS
HRL
LN
Hand
Chuk
MecHnd/Chuk
ShkAbs
FJ
FK
SpdContr
Ending

5 Calculate absorbed energy E according to "Example of colliding pattern"

- Calculate thrust/self-weight energy E_2 according to "Example of colliding pattern".
  Calculate S (stroke length of FCK) as temporary stroke length S' selected in Step 4.
  Calculate absorbed energy E according to "Example of colliding pattern".

6 Shock absorber temporary selection

- Select orifice according to energy ratio (thrust/self-weight energy, kinetic energy) and colliding speed on Fig. 2 (page 1935), then select a model provisionally according to calculated absorbed energy E.

  *1: Allowable energy absorption may vary depending on colliding speed. Refer to pages 1936 and 1937.

7 Re-calculate absorbed energy E with temporary selected model

- Calculate absorbed energy E_2 according to "Example of collision pattern". Calculate S (stroke length of FCK) as model stroke length selected in Step 6.
- Calculate absorbed energy E according to "Example of colliding pattern".

8 Calculate energy Et per hour

- Calculate energy per hour Et according to "Example of colliding pattern".

9 Confirm the equivalent weight M

- Calculate equivalent weight M according to "Example of colliding pattern".

10 Selection confirmation

- If calculated absorbed energy, energy per hour, equivalent weight, frequency of usage, ambient temperature and return time are in accordance with specifications of the selected shock absorber, there is no problem. If exceeding specifications range, select one size larger shock absorber according to model, selected before, then recalculate conditions.

  *1: The specified equivalent weight depends on the speed. Refer to pages 1936 and 1937 for details.

Example of selection

$E_2 = (M \cdot g + F) \cdot S = (15 \times 9.8 + 245.5) \times 0.03 = 11.8$ J

$E = E_1 + E_2 = 15.1 + 11.8 = 26.9$ J

$\frac{E_2}{E_1} = \frac{11.8}{15.1} = 0.8$

Provisionally select porous orifice (FCK-H-3) from models of E = 26.9 and higher.

$E_2 = (15 \times 9.8 + 245.5) \times 0.016 = 6.28$ J

$E = 15.1 + 6.28 = 21.4$ J

$Et = 60 \cdot E \cdot n = 60 \times 21.4 \times 10 = 1284$ J/h

$Me = \frac{2E}{V^2} = \frac{2 \times 21.4}{1.42^2} = 21.2$ kg

		Calculated value	FCK-H-3 specification values	Judgment
E	J	21.4	29.4 or less	OK
Et	J/h	1284	20580 or less	OK
Me	kg	21.2	29 or less	OK
n	Cycle/min.	10	60 or less	OK
t	°C	23	-5 to 70	OK
Rt	S	2	0.5 or more	OK

[CAUTION]
Use speed just before colliding into shock absorber to select shock absorber by calculation. This speed differs from average speed (cylinder stroke/travel time).
Calculate or measure speed just before collision, or use 1.5 to 2 times the average speed when making calculations for selection.

Fig.1 Temporary selection graph

Obtain temporary stroke length S' from kinetic energy E_1.

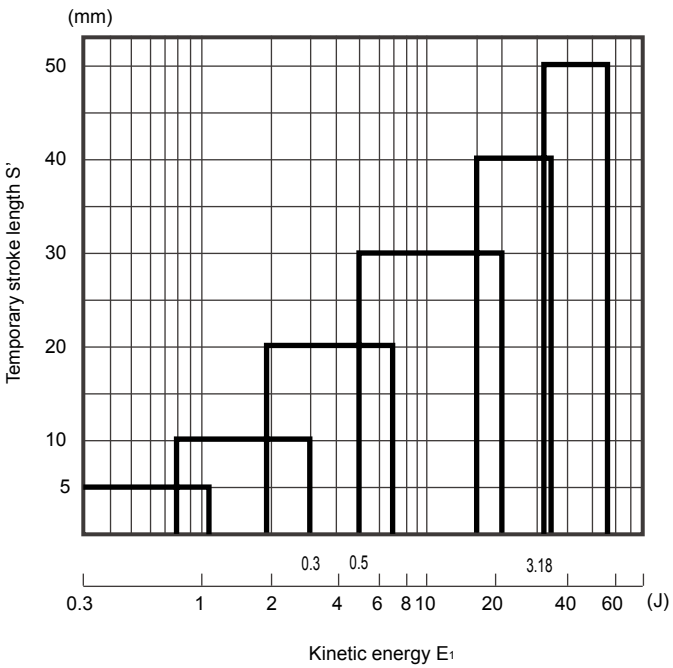

Fig. 2. Energy ratio (thrust/self-weight energy E_2, inertia energy E_1)

Refer to the following figure to select the orifice.

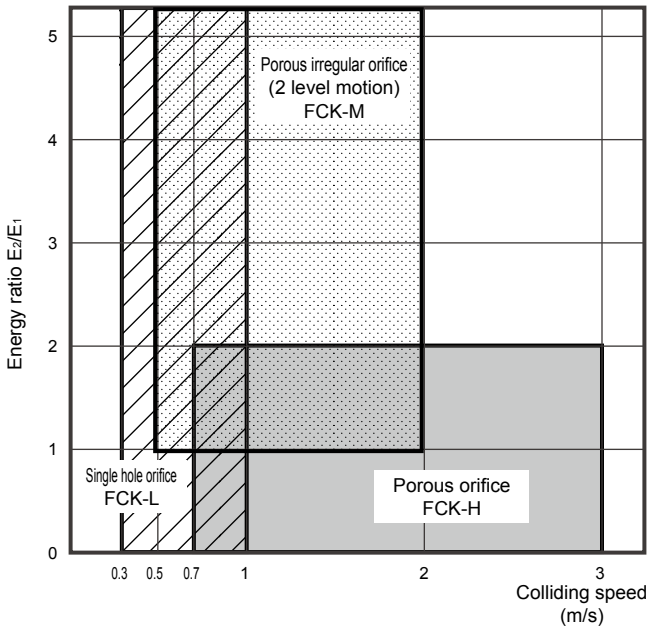

Absorbing characteristics structure

Constant orifice	Single hole orifice structure	FCK-L	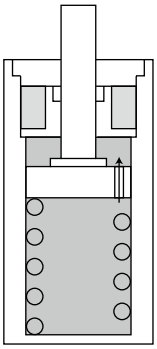	Single hole orifice structure includes a dash pot structure that uses the clearance between the piston and cylinder tube, a single tube structure with an orifice on the piston, and a double tube single hole orifice structure (adjustable). Each type has similar resistance characteristics. The common single tube structure is explained here. The piston, which has a single hole orifice, slides in the cylinder tube filled with oil. Since the orifice area is constant throughout the full stroke length, resistance increases immediately after collision, and decreases as the stroke advances and speed declines.	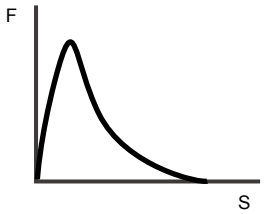
Displacement dependent orifice	Porous orifice structure	FCK-H	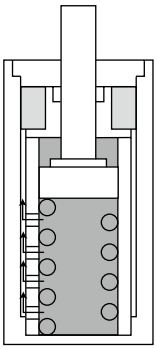	This orifice has a double structure consisting of an outer and inner tube. The piston slides along the inner wall of the inner tube. This inner tube has several orifices set in the direction of the stroke. The orifice area gradually decreases as the stroke advances and speed drops. Resistance thus fluctuates in a wave, but max. resistance is suppressed at a low level. Based on orifice design, absorption characteristics are matched to individual collision conditions.	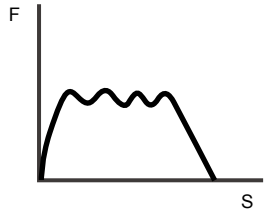
	Porous irregular orifice structure	FCK-M	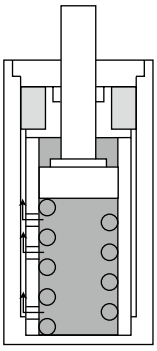	Structurally, this type is basically the same as the multiple orifice above, but by changing the orifice, energy is absorbed based on the purpose instead of with constant attenuation force. For example, the orifice in the FCK-M Series absorbs kinetic energy with the first half of the stroke and controls speed with the second half. Energy is absorbed ideally for cylinder thrust.	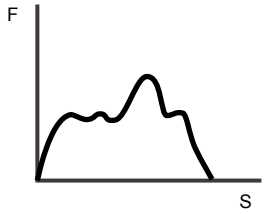

LCM
LCR
LCG
LCW
LCX
STM
STG
STS/STL
STR2
UCA2
ULK*
JSK/M2
JSG
JSC3/JSC4
USSD
UFCD
USC
UB
JSB3
LMB
LML
HCM
HCA
LBC
CAC4
UCAC2
CAC-N
UCAC-N
RCS2
RCC2
PCC
SHC
MCP
GLC
MFC
BBS
RRC
GRC
RV3*
NHS
HRL
LN
Hand
Chuk
MecHnd/Chuk
ShkAbs
FJ
FK
SpdContr
Ending

Equivalent weight/colliding speed characteristics graph

Equivalent weight:
Weight obtained by calculating all cylinder thrust and weight mass as inertial energy.

$$\frac{1}{2}MV^2+F\cdot S=E = MeV^2$$

M: Colliding object weight
F: Self weight of cylinder thrust or weight
Me: Equivalent weight

Single hole orifice (FCK-L)

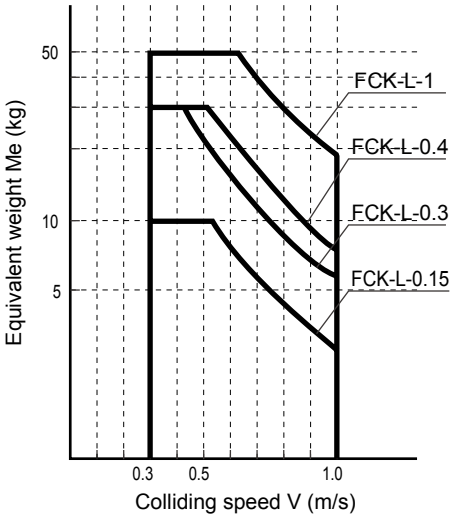

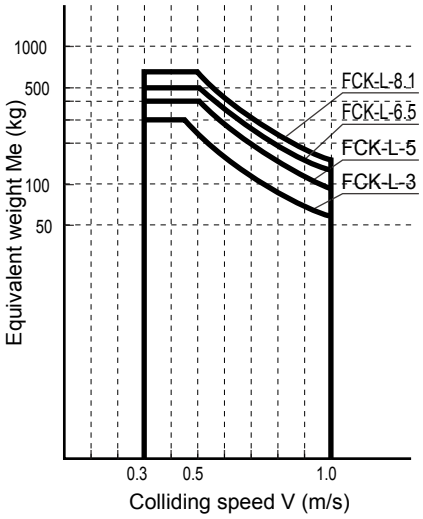

Porous irregular orifice (FCK-M)

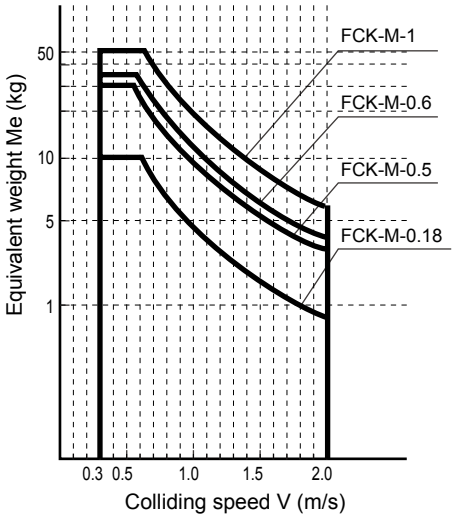

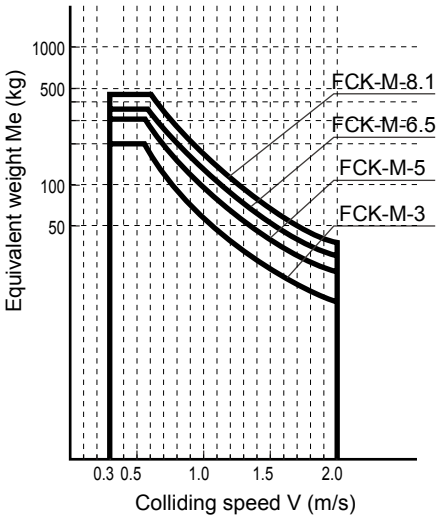

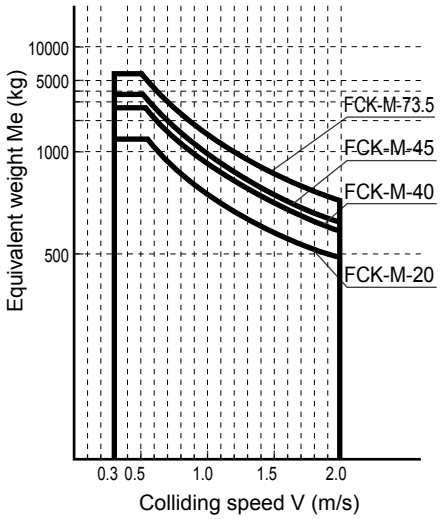

Porous orifice (FCK-H)

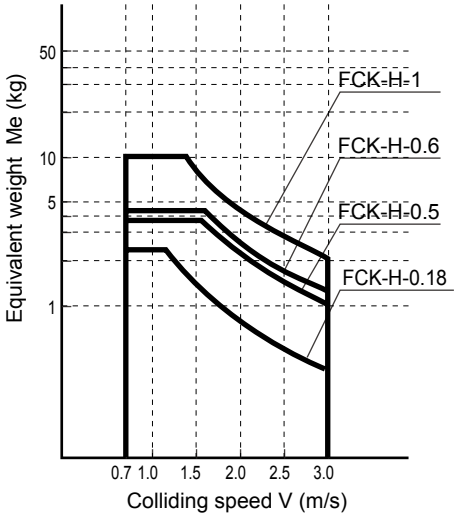

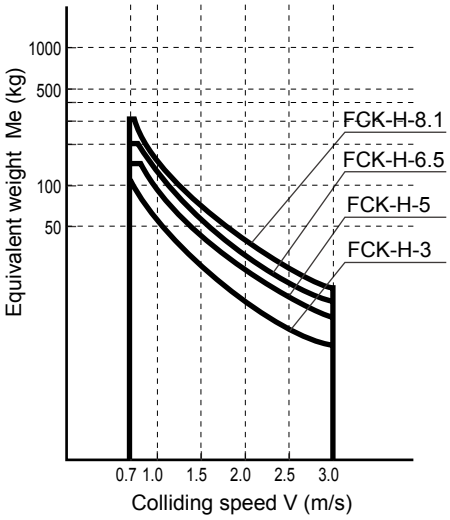

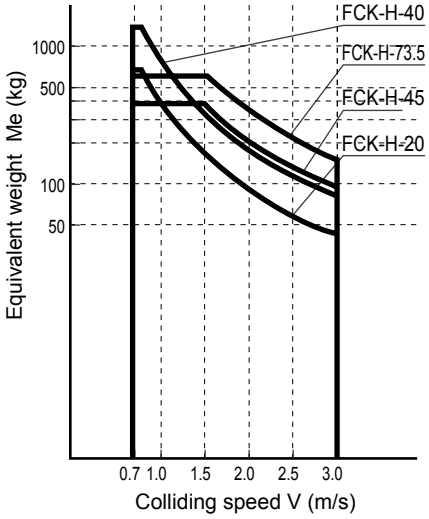

Absorbed energy/colliding speed characteristics graph

Single hole orifice (FCK-L)

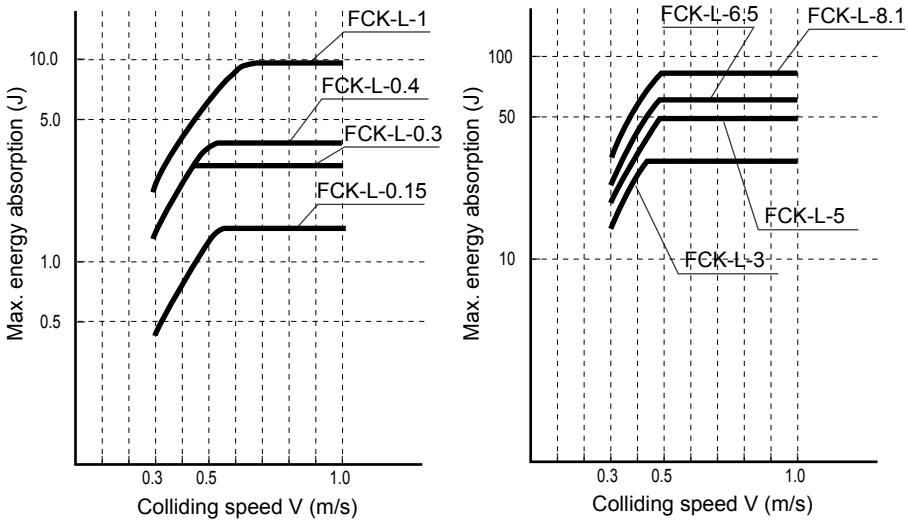

Porous irregular orifice (FCK-M)

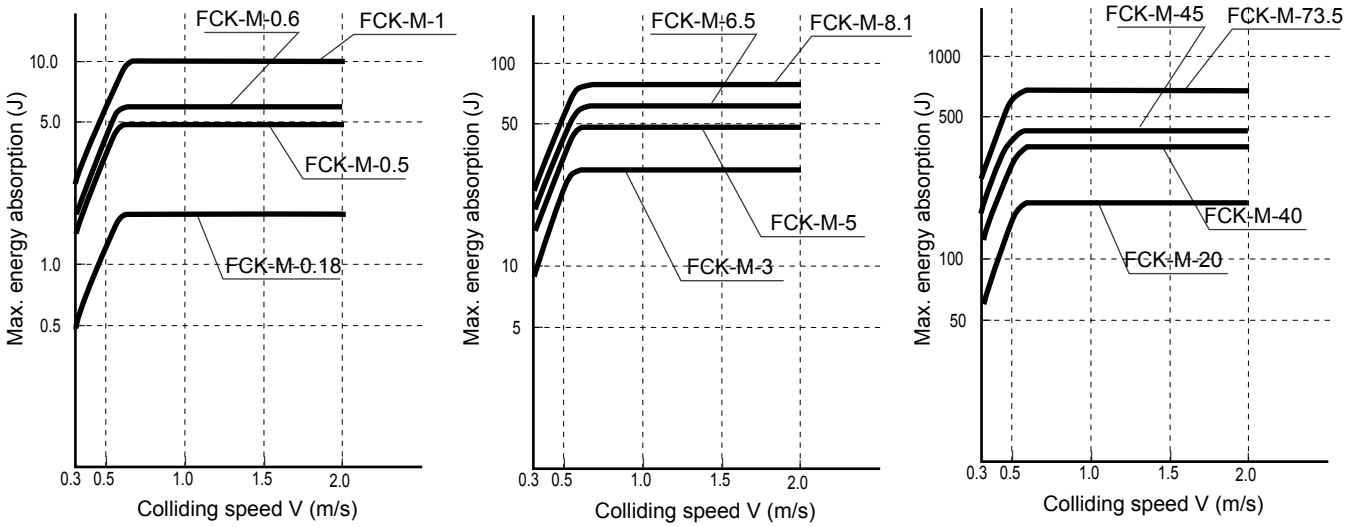

Porous orifice (FCK-H)

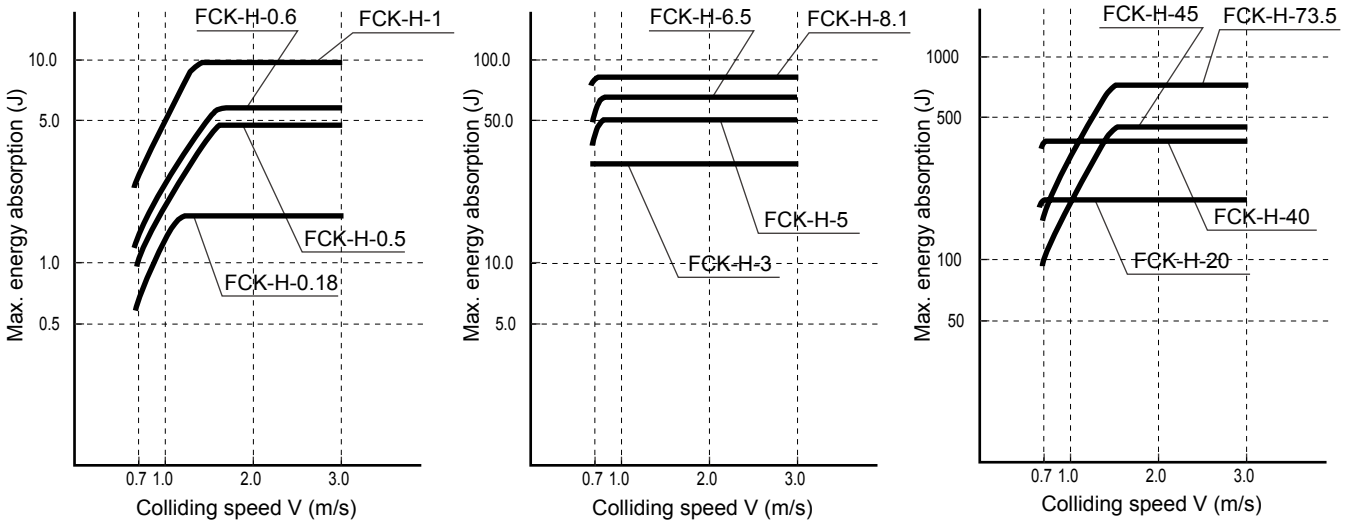

LCM
LCR
LCG
LCW
LCX
STM
STG
STS/STL
STR2
UCA2
ULK*
JSK/M2
JSG
JSC3/JSC4
USSD
UFCD
USC
UB
JSB3
LMB
LML
HCM
HCA
LBC
CAC4
UCAC2
CAC-N
UCAC-N
RCS2
RCC2
PCC
SHC
MCP
GLC
MFC
BBS
RRC
GRC
RV3*
NHS
HRL
LN
Hand
Chuk
MecHnd/Chuk
ShkAbs
FJ
FK
SpdContr
Ending

Selection calculation example

	Selection example 1	Selection example 2
1. Applications	Horizontal collision with cylinder thrust 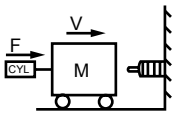 Cylinder bore size = ø40 Pressure = 0.5 MPa	Horizontal collision with motor drive force 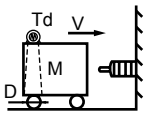 Motor start torque Td = 0.196 N·m Wheel diameter of carriage D = 50 mm Reduction ratio of carriage K = 10
2. Collision conditions	M = 30 kg V = 0.6 m/s F = 628.3 N $(F = \frac{\pi}{4} \times 40^2 \times 0.5 = 628.4\ N)$ n = 20 cycle/min. t = 23°C Rt = 3S	M = 150 kg V = 0.785 m/s F = 78.4 N $(F = 2 \cdot \frac{K}{D} \cdot Td = 2 \times \frac{10}{0.05} \times 0.196 = 78.4\ N)$ n = 5 cycle/min. t = 23°C Rt = 2S
3. Kinetic energy E_1	$E_1 = \frac{1}{2}MV^2 = \frac{1}{2} \times 30 \times 0.6^2 = 5.4\ J$	$E_1 = \frac{1}{2}MV^2 = \frac{1}{2} \times 150 \times 0.785^2 = 46.2\ J$
4. Temporary stroke length S'	S' = 20mm from Fig.1	S' = 50mm from Fig.1
5. Thrust/self-weight energy E_2 Absorbed energy E	$E_2 = F \cdot S = 628.3 \times 0.02 = 12.57J$ $E = E_1 + E_2 = 5.4 + 12.57 = 17.97\ J$	$E_2 = 2 \cdot \frac{K}{D} \cdot TdS = 2 \times \frac{10}{0.05} \times 0.196 \times 0.05$ $= 3.92\ J$ $E = E_1 + E_2 = 46.2 + 3.92 = 50.12\ J$
6. Temporary selection	$\frac{E_2}{E_1} = \frac{12.57}{5.4} = 2.3$ Select porous irregular orifice (FCK-M-3) temporarily	$\frac{E_2}{E_1} = \frac{3.92}{46.2} = 0.08$ Select porous orifice (FCK-H-6.5) temporarily
7. Absorbed energy recalculation	$E_2 = F \cdot S = 628.3 \times 0.016 = 10.05J$ $E = E_1 + E_2 = 15.45\ J$	$E_2 = 2 \cdot \frac{K}{D} \cdot TdS = 2 \times \frac{10}{0.05} \times 0.196 \times 0.04$ $= 3.14\ J$ $E = E_1 + E_2 = 49.34\ J$
8. Energy per hour Et	$Et = 60 \cdot E \cdot n = 60 \times 15.45 \times 20 = 18540\ J/h$	$Et = 60 \times E \cdot n = 60 \times 49.34 \times 5 = 14802J/h$
9. Equivalent weight Me	$Me = \frac{2E}{V^2} = 85.8\ kg$	$Me = \frac{2E}{V^2} = \frac{2 \times 49.34}{0.785^2} = 160\ kg$
10. Confirmation	E, Et, Me, n, t and Rt are all OK Determined at FCK-M-3	E, Et, Me, n, t and Rt are all OK Determined at FCK-H-6.5

LCM
LCR
LCG
LCW
LCX
STM
STG
STS/STL
STR2
UCA2
ULK*
JSK/M2
JSG
JSC3/JSC4
USSD
UFCD
USC
UB
JSB3
LMB
LML
HCM
HCA
LBC
CAC4
UCAC2
CAC-N
UCAC-N
RCS2
RCC2
PCC
SHC
MCP
GLC
MFC
BBS
RRC
GRC
RV3*
NHS
HRL
LN
Hand
Chuk
MecHnd/Chuk
ShkAbs
FJ
FK
SpdContr
Ending

Selection example 3	Selection example 4
Carriage falling down slope 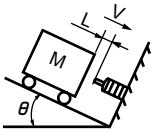 L=1 m θ=2°	Object performing rotational free fall 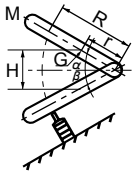 α = 15° β = 5°
M = 100 kg V = 0.83 m/s ($V = \sqrt{2 \cdot g \cdot L \cdot \sin\theta} = \sqrt{2 \times 9.8 \times 1 \times \sin 2°} = 0.83$ m/s) n = 10 cycle/min. t = 23°C Rt = 5 S	M = 2 kg R = 0.5 m H = 0.1 m r = 0.3 m ($V = \frac{R}{r}\sqrt{\frac{3 \cdot g \cdot H}{2}} = \frac{0.5}{0.3}\sqrt{\frac{3 \times 9.8 \times 0.1}{2}} = 2.02$ m/s) n = 50 cycle/min. t = 20°C Rt = 0.6S
$E_1 = \frac{1}{2} \cdot M \cdot V^2 = \frac{1}{2} \times 100 \times 0.83^2 = 34.4$J	$E_1 = M \cdot g \cdot H = 2 \times 9.8 \times 0.1 = 1.96$J
S' = 50mm from Fig.1	S' = 10 mm from Fig.1
$E_2 = M \cdot g \cdot S \cdot \sin\theta = 100 \times 9.8 \times 0.05 \times \sin 2° = 1.71$J $E = E_1 + E_2 = 34.4 + 1.71 = 36.1$ J	$E_2 = \frac{r}{R} \cdot M \cdot g \cdot S \cdot \cos\beta = \frac{r}{R} \times 2 \times 9.8 \times 0.01 \times \cos 5°C = 0.11$J $E = E_1 + E_2 = 1.96 + 0.11 = 2.07$ J
$\frac{E_2}{E_1} = \frac{1.71}{34.4} = 0.05$ Select porous orifice (FCK-H-5) temporarily	$\frac{E_2}{E_1} = \frac{0.11}{1.96} = 0.06$ Select porous orifice (FCK-H-0.5) temporarily
$E_2 = M \cdot g \cdot S \cdot \sin\theta = 100 \times 9.8 \times 0.03 \times \sin 2° = 1.03$J $E = E_1 + E_2 = 35.4$ J	$E_2 = \frac{r}{R} \cdot M \cdot g \cdot S \cdot \cos\beta = 0.11$J $E = E_1 + E_2 = 1.96 + 0.11 = 2.07$ J
$Et = 60 \cdot E \cdot n = 60 \times 35.4 \times 10 = 21240$J/h	$Et = 60 \cdot E \cdot n = 60 \times 2.07 \times 50 = 6210$J/h
$Me = \frac{2E}{V^2} = \frac{2 \times 35.4}{0.83^2} = 102.7$ kg	$Me = \frac{2E}{V^2} = \frac{2 \times 2.07}{2.02^2} = 1.0$ kg
E, Et, Me, n, t and Rt are all OK Determined at FCK-H-5	E, Me, n, t and Rt are OK. However, recalculate with one size larger FCK-H-0.6, since Et is too high.

LCM
LCR
LCG
LCW
LCX
STM
STG
STS/STL
STR2
UCA2
ULK*
JSK/M2
JSG
JSC3/JSC4
USSD
UFCD
USC
UB
JSB3
LMB
LML
HCM
HCA
LBC
CAC4
UCAC2
CAC-N
UCAC-N
RCS2
RCC2
PCC
SHC
MCP
GLC
MFC
BBS
RRC
GRC
RV3*
NHS
HRL
LN
Hand
Chuk
MecHnd/Chuk
ShkAbs
FJ
FK
SpdContr
Ending

Selection example 5	Selection example 6
Object falling down slope 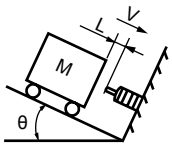 L = 0.45 m θ = 5°	Horizontal rotational collision with torque 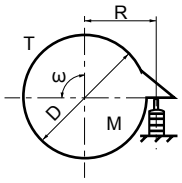
M = 1.0 kg V = 0.88 m/s ($V = \sqrt{2 \cdot g \cdot L \cdot \sin\theta} = \sqrt{2 \times 9.8 \times 0.45 \times \sin 5°} = 0.88$ m/s) n = 15 cycle/min. t = 23°C Rt = 2S	J = 204.1 kgm^2 ω = 0.6 rad/s R = 1.25 m n = 10 cycle/min. T = 68.6 N·m t = 20°C Rt = 3s
$E_1 = \frac{1}{2} \cdot M \cdot V^2 = \frac{1}{2} \times 1.0 \times 0.88^2 = 0.387$J	$E_1 = \frac{J \cdot \omega^2}{2} = \frac{204.1 \times 0.6^2}{2} = 36.7$ J
S' = 5mm from Fig.1	S' = 50mm from Fig.1
$E_2 = M \cdot g \cdot S \cdot \sin\theta = 1 \times 9.8 \times 0.005 \times \sin 5° = 0.004$J $E = E_1 + E_2 = 0.387 + 0.004 = 0.391$ J	$E_2 = \frac{T}{R} \cdot S = \frac{68.6}{1.25} \times 0.05 = 2.74$J $E = E_1 + E_2 = 36.7 + 2.74 = 39.44$ J
$\frac{E_2}{E_1} = \frac{0.004}{0.387} = 0.01$ Select single hole orifice (FCK-L-0.15) temporarily	$\frac{E_2}{E_1} = \frac{2.74}{36.7} = 0.07$ $V = \omega \cdot R = 0.6 \times 1.25 = 0.75$ m/s Select porous orifice (FCK-H-5) temporarily
$E_2 = M \cdot g \cdot S \cdot \sin\theta = 1 \times 9.8 \times 0.008 \times \sin 5° = 0.007$J $E = E_1 + E_2 = 0.394$ J	$E_2 = \frac{T}{R} \cdot S = \frac{68.6}{1.25} \times 0.03 = 1.65$J $E = E_1 + E_2 = 38.6$ J
$Et = 60 \cdot E \cdot n = 60 \times 0.394 \times 15 = 354.6$J/h	$Et = 60 \cdot E \cdot n = 60 \times 38.6 \times 10 = 23160$J/h
$Me = \frac{2E}{V^2} = \frac{2 \times 0.394}{0.88^2} = 1.02$ kg	$Me = \frac{2E}{V^2} = \frac{2 \times 38.6}{0.75^2} = 137.2$ kg
E, Et, Me, n, t and Rt are all OK Determined at FCK-L-0.15	E, Et, Me, n, t and Rt are OK. Determined at FCK-H-5.

Pneumatic components

Safety Precautions

Be sure to read this section before use.

Refer to Intro Page 73 for general information of the cylinder, and to Intro Page 80 for general information of the cylinder switch.

Product-specific cautions: Shock absorber SKL/NCK/SCK/FCK Series

Design/selection

1. Common

⚠ WARNING

■ Use the product in the range of conditions specified for the product.

If max. energy absorption in specifications is exceeded, damage or operation faults may occur. Note that the performance listed in the specifications cannot be exhibited if the products are not used with their full stroke length.

⚠ CAUTION

■ Confirm before use that the product will withstand the working environment.

- Use in conditions exceeding the ambient temperature range will negatively affect durability.
- Do not use in an environment other than atmospheric pressure (vacuum, high pressure).

■ Be careful of splattering due to damage of the cap.

- If used outside the specifications, the cap may be damaged and cause injuries due to the device flying apart.
- Either install a cover to prevent splatter or stand away in a position where safety can be ensured while the master unit is in operation.
- Do not use this product inside clean rooms.
  Failure to comply may cause contamination of the clean rooms.

■ Confirm the colliding conditions.

- Before use, obtain the colliding speed, colliding object weight, thrust applied to the shock absorber and the number of collisions per minute.

(1) This will also be necessary during calculations for selection. In cases when the colliding speed is less than or equal to the specified range, the shock absorber cannot be expected to perform as well, since it will be more difficult for resistance to occur and the energy absorption will be smaller.

(2) This product cannot be used in cases where the number of collisions per minute will exceed the max. frequency.

■ Check that the surface of the colliding object contacted by the piston rod has a high degree of hardness.

- For types without cap, a high surface compression load will be applied to the contact surface of the piston rod of the colliding object. The contact surface is to have a high degree of hardness (hardness rating of HRC 35 or above).

■ Take note of the returning force of the colliding object.

- When using this product for conveyor drive, etc., it may be pressed back by internal spring force after energy is absorbed. For the return force, refer to the field for the return spring force listed in the specifications.

■ Do not use 2 or more shock absorbers in a parallel arrangement as it will be difficult to synchronize the motion thereof. Absorb the impact with a single shock absorber having a large absorption energy.

■ Use an external stopper or the optional stopper nut at the final stop position of the colliding object so impact is not applied to the body. Impact force on the body may lead to decreased durability or defective return. Confirm before use that the product will withstand the working environment.

■ The max. repetition frequency will differ depending on the ambient temperature.

■ The values provided in the specification descriptions are for use in room temperature (20°C). Note that the specification values will vary depending on the ambient temperature.

Mounting, installation and adjustment

1. Common

⚠ DANGER

■ Do not use this product near fire or in devices or machines having an ambient temperature exceeding specifications.
The flammable oil in the product poses a risk of fire.

■ Do not place in fire.
Since oil is sealed, this product may explode or ignite if placed in fire.

⚠ WARNING

■ Do not apply an eccentric load at a deflection angle of ±A° or more from the center line of the piston rod.
- Collision of a load at a deflection angle of ±A° or more may cause defective return due to the piston rod becoming bent or deterioration of performance due to eccentric wear of the sliding portions.
  When using the unit at a deflection angle of ±A° or more, use the optional deflection angle adapter. This will enable use at a deflection angle of up to ±10°. (FCK Series)

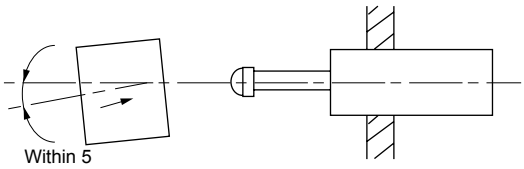

	SKL/FCK	NCK/SCK
A	2.5°	5°

- When using rotary motion collision, set the distance from the center of the colliding object's rotation to the shock absorber installation position at 12-fold and over of the shock absorber stroke (3-fold and over when using a deflection angle adaptor). Install so contact is at a right angle at a position half of the stroke.

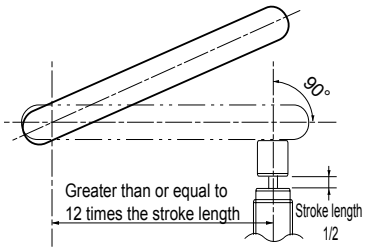

■ Use with mounting parts of insufficient strength is prohibited.
- Operating the unit with mounting parts of insufficient strength may cause damage to the master unit or lead to injuries.
- Ensure that the strength of the mounting parts is at least the max. load multiplied by the safety rate.
  (Refer to the max. load. or contact CKD.)

■ Do not remove the cap of the shock absorbers equipped with a cap.
- As the piston rod has been extended in order to mount the cap, use with the cap removed will cause damage to the bottom portion.

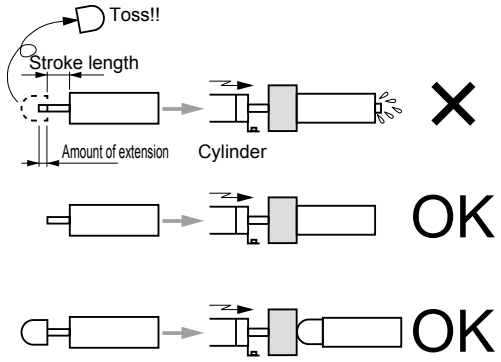

■ A guide is required if the colliding object vibrates.
Install a secure guide on the colliding object if the colliding object vibrates or if force is applied to the piston rod at an axial right angle direction.

■ When there is the risk of static electricity building up in an explosive environment
Install a grounding device for releasing electrical charge and never use buffering surface materials that may create sparks.

■ Dumping into fire is prohibited.
- Since the oil is sealed, this product has a risk of injury as it may explode or ignite if placed in fire.
- Dispose of the oil according to prescribed methods for processing waste oil.

■ Do not apply a separate external load with a colliding object which has been stopped at the end of its stroke. Additional impact of the external load may lead to damage.

■ Turn device power OFF and confirm the machine is stopped before installing, removing, or adjusting the stroke.

⚠ CAUTION

■ Make sure the tightening torque of the installation nut is in accordance with the following table.

● The shock absorber may be damaged if nut tightening torque exceeds the upper limit in the table below.
If the nut is to be securely tightened, use adhesives, etc., to ensure nut tightness.

(SKL Series)

Thread diameter (mm)	M8×0.75	M10×1	M12×1
Nut tightening torque (N·m)	1.2 to 2.0	3 to 4	5 to 6

(NCK Series)

Thread diameter (mm)	M8×0.75	M10×1	M12×1	M14×1.5	M20×1.5
Nut tightening (N·m)	1.2 to 2.0	3 to 4	5 to 6	7.5 to 10	22 to 30

Thread diameter (mm)	M25×1.5	M27×1.5
Nut tightening (N·m)	55 to 70	100 to 130

(SCK Series)

Thread diameter (mm)	M10×1	M12×1	M16×1	M20×1	M25×1.5
Nut tightening (N·m)	3.4	5.4	14.2	70.8	421.7 to 588.4

Thread diameter (mm)	M30×1.5	M40×1.5	M45×1.5
Nut tightening (N·m)	149.1 to 196.1	274.6 to 353.0	421.7 to 588.4

(FCK Series)

Thread diameter (mm)	M10×1	M12×1	M14×1.5	M16×1.5	M20×1.5
Nut tightening (N·m)	5.9 to 7.8	5.9 to 7.8	8.3 to 9.8	11.8 to 14.7	29.4 to 35.3

Thread diameter (mm)	M25×1.5 M25×2	M27×1.5 M27×3	M30×1.5	M36×1.5	M42×1.5
Nut tightening (N·m)	49.0 to 61.0	58.9 to 73.5	78.4 to 98.0	98.0 to 122.5	392.0 to 490.0

■ If the rotating objects collide or if deformation or wear is generated between the shock absorber and the colliding object, place protective material over the collision surface to prevent deformation and wear.

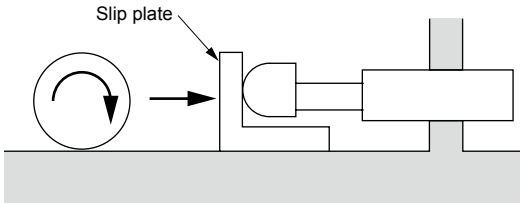

■ Do not damage the sliding portion of the piston rod or the threaded portion on the outer diameter of the damper case.
Do not contact or sandwich objects between the piston rod sliding section or outer tube screws O. D. section, or overly screw in fastening screws, etc., causing damage or dents. Scratches or dents on the sliding portion of the piston rod will cause damage of the packing, etc., and may lead to leakage of oil or defective operation. Scratches or dents on the threaded portion on the outer diameter of the outer tube may make it impossible to install the unit on the base or lead to defective operation due to deformation of internal structuring parts.

■ Do not use in conditions where oil mist or water drops may contact the rod surface, or in areas with high levels of wear powder. Energy is not absorbed properly and faults may occur.

■ Use without an external stopper is prohibited.

● Operation without an external stopper may damage the main body due to bottoming.

● Operate the unit upon installing an external stopper at the position decided for each model.

	L
NCK	0.5 mm
SCK	2 to 3 mm
FCK	1 mm

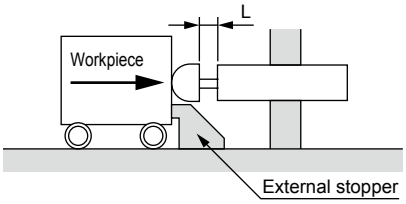

■ Installation with other than the tightening torque value is prohibited.

● Installation with other than the tightening torque value may lead to damage of the master unit.

● Do not fix with screws that do not match the mounting holes. This may cause the product to collapse or become damaged.

■ Be careful of detachment of the snap ring.

● If used outside the specifications, the internal pressure of the inner tube in the shock absorber may rise abnormally, causing the snap ring to come off. This may cause inner parts to pop out and cause injury.

● Do not go near the shock absorber during operation.

■ If the device is stored with the rod pushed in, the performance of the air chamber may drop. Do not store with the rod pushed in.

■ Be sure to adjust the adjustable, use at the optimum position.

■ Make sure that the piston rod and the threaded portion on the outer diameter of the tube are not scratched.

● The sealant will become scratched, which may lead to decreased durability or defective return.

2. Adjustment method for the FCK series

⚠ CAUTION

■ To adjust the shock absorber, first set the adjusting dial to “2”, collide, then while observing the status, rotate in the direction of “1” or “3” to the optimum position.

● After setting the scale to an appropriate position, tighten the lock screw before starting use. If the lock screw is not tightened, the adjusted position may deviate and optimum absorption may not be attained.
(However, FCK-L-0.15, FCK-$^{H}_{M}$-0.18, FCK-L-0.3, and FCK-$^{H}_{M}$-0.5 are not provided with a lock screw mechanism.)

● Protect the shock absorber with an external stopper or a stopper nut while making adjustments.
* Adjustment knob 1 → 2 → 3 indicates absorbed energy levels of low → medium → high.

● As there are slight variances between individual products, adjust each product to determine the most appropriate adjustment positions.

● The recommended tightening torque for the lock screw is as follows:
FCK- □ -0.4, 0.6 0.09 ± 0.01 N·m
FCK- □ -1 0.3 ± 0.02 N·m
FCK- □ -3 and absorber outer diameter thread size M2O and higher models 0.7 ± 0.03 N·m

3. Adjustment method for the SCK series

⚠ CAUTION

As products of SCK-**-0.3 and above are equipped with an adjuster, adjust in accordance with the steps below.
As the adjuster is capable of being turned by more than one rotation, when adjusting it be sure to first turn it to the right (clockwise) to the end (max. absorbed energy scale mark) before turning it to the left (counterclockwise) to make adjustments.
The adjuster has a rotation-stop function and locks the position with a detent. Be sure to check that the colliding force is applied when the detent is activated.

*1. The max. energy absorption is attained when the adjuster is turned clockwise to 9, while the min. energy absorption is attained when the adjuster is turned counterclockwise by slightly more than one rotation. Min. energy may vary per product. Be careful, as forcing the adjuster to turn will lock or damage it.

*2. The operation time may become longer or operation may stop midway if the adjuster is not set to an appropriate level.

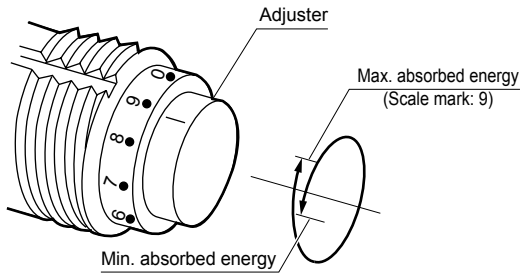

Use/maintenance

1. Common

⚠ WARNING

■ Disassembly is prohibited.
- Do not disassemble the unit, as doing so may be dangerous.

⚠ CAUTION

■ Careless oil dumping is prohibited.
- Careless disposal of the oil in the shock absorbers will pollute the environment.
- Dispose of the oil according to prescribed methods for processing waste oil.

■ Be careful of irregular vibrations as well as noises due to vibrations.
- If the sound of collision or vibration becomes abnormally loud, replace the unit as it is possible that the service life has been reached. Continued use following such symptoms may lead to damage of the equipment to which the unit has been installed.

FJ

Floating fitting

Related products

Overview

This floating fitting eliminates misalignment and parallelism defects during cylinder mounting, and realizes smooth rod actuation.

Features

Easy centering/parallelism alignment.
This can be set quickly.
Compact and high tensile/ compression force permissible.
With dust cover. (excluding FJ-30, 36, 40 and 45).
3 types in series.
Filled with lubricant and not requiring lubrication.

CONTENTS

Series variation	1946
● Floating fitting (FJ)	1948
⚠ Safety precautions	1953

Floating fitting FJ Series

Variation	Model No.	Thread size							
		M3×0.5	M4×0.7	M5×0.8	M6×1.0	M8×1.0	M8×1.25	M10×1.25	
Basic	FJ-0	●	●	●	●	●	◎	●	
Foot	FJ-L					●	◎	●	
Flange	FJ-F					●	◎	●	

●: Standard, ◎: Option, ○: Made to order, : Not available

Thread size												Page
	M12×1.25	M12×1.5	M14×1.5	M16×1.5	M18×1.5	M22×1.5	M26×1.5	M30×1.5	M36×1.5	M40×1.5	M45×1.5	
	◎	●	●	●	●	●	●	●	○	○	○	1948
	◎	●	●	●	●	●	●	●	○	○	○	1948
	◎	●	●	●	●	●	●	●	○	○	○	1948

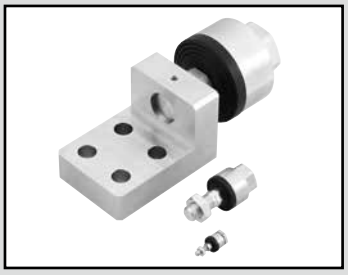

Floating fitting

FJ Series

• Cylinder diameter: ø20 to ø200

RoHS CAD

Specifications

Item / Model No.	Nominal port size of thread x pitch	Max. working tension and compression (kN) *1 Basic	Flange	Foot	Allowable eccentricity (mm)	Oscillating angle	Ambient temperature
FJ-*- 3	M3×0.5	0.019	——	——	0.5	±5°	-10 (14°F) to 60°C (140°F)
4	M4×0.7	0.053	——	——	0.5		
5	M5×0.8	0.121	——	——	0.5		
6	M6×1.0	1.08	——	——	0.75		
8	M8×1.0	1.08	1.08	1.08	0.75		
8-1.25	M8×1.25	1.08	1.08	1.08	0.75		
10	M10×1.25	2.45	2.45	2.45	0.75		
12-1.25	M12×1.25	2.45	2.45	2.45	0.75		
12	M12×1.5	2.45	2.45	2.45	0.75		
14	M14×1.5	5.88	5.88	5.88	1.0		
16	M16×1.5	10.8	10.8	10.8	1.5		
18	M18×1.5	10.8	10.8	10.8	1.5		
22	M22×1.5	17.6	17.6	17.6	2.0		
26	M26×1.5	27.5	27.5	27.5	3.0		
30	M30×1.5	60.8	60.8	60.8	3.0		
36	M36×1.5	87.3	87.3	87.3	4.0		
40	M40×1.5	87.3	87.3	87.3	4.0		
45	M45×1.5	108	108	108	4.0		

*1: Max. working tension and compression shows static load.
*2: FJ-8-1.25 and FJ-12-1.25 are optional products.
FJ-36, 40 and 45 are made-to-order products.

How to order

FJ - 0 - 3

Ⓐ Mounting

Ⓑ Nominal port size of thread x pitch

Code	Description
Ⓐ Mounting	
0	Basic
L	Foot
F	Flange

Ⓑ Nominal port size of thread x pitch

	Mounting	O	L	F
3	M3×0.5	●		
4	M4×0.7	●		
5	M5×0.8	●		
6	M6×1.0	●		
8	M8×1.0	●	●	●
8-1.25	M8×1.25	●	●	●
10	M10×1.25	●	●	●
12-1.25	M12×1.25	●	●	●
12	M12×1.5	●	●	●
14	M14×1.5	●	●	●
16	M16×1.5	●	●	●
18	M18×1.5	●	●	●
22	M22×1.5	●	●	●
26	M26×1.5	●	●	●
30	M30×1.5	●	●	●
36	M36×1.5	●	●	●
40	M40×1.5	●	●	●
45	M45×1.5	●	●	●

[Example of model No.]

FJ-0-3

Model: Floating fitting
Ⓐ Mounting : Basic
Ⓑ Nominal port size of thread x pitch : M3×0.5

Specifications for rechargeable battery (Catalog No. CC-1226A)
(The model numbers are only for sizes 3, 4 and 5. As for the other sizes, products with standard model No. can support rechargeable batteries.)

FJ - ··· - P4*

● Design compatible with rechargeable battery manufacturing process

* Contact CKD for details.

Internal structure and parts list

● FJ-O-3 to 5

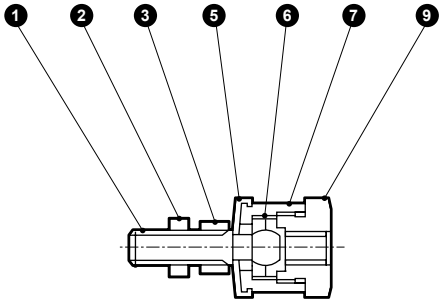

● FJ-O-6, 8, 10
FJ-O-36 to 45

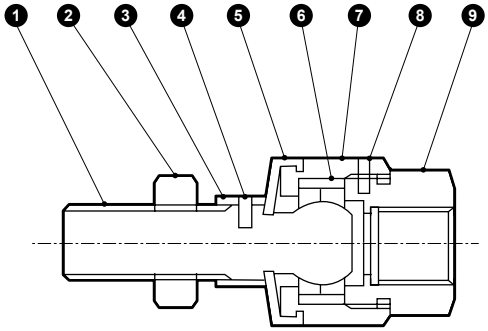

● FJ-12 to 30

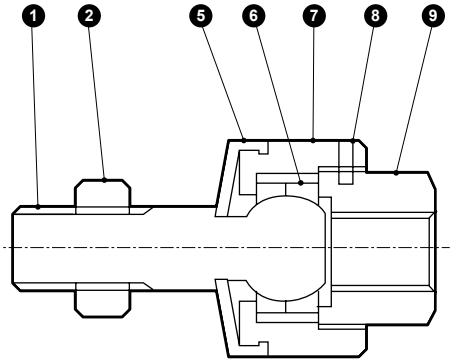

Cannot be disassembled

No.	Part name	Material	Treatment	No.	Part name	Material	Treatment
1	Ball stud	Alloy steel	Trivalent chromate treatment	8	Spring pin	Steel	Black finish
2	Rod nut	Steel	Trivalent chromate treatment	9	Socket	Copper alloy (FJ-3 to 5)	Electroless nickel plating
3	Stud nut	Steel	Trivalent chromate treatment			Steel (FJ-6 to 45)	Trivalent chromate treatment
4	Spring pin	Steel	Black finish	—	Foot	Steel (FJ-8.10.12)	Trivalent chromate treatment
5	Dust cover	Nitrile rubber	——			Cast iron (FJ-14 to 30)	Trivalent chromate treatment
6	Ball holder	Steel (FJ-3 to 5)	Electroless nickel plating			Steel (FJ-36 to 45)	Trivalent chromate treatment
		Alloy steel (FJ-6 to 45)	Trivalent chromate treatment	—	Flange	Steel	Trivalent chromate treatment
7	Case	Copper alloy (FJ-3 to 5)	Electroless nickel plating				
		Steel (FJ-6 to 45)	Trivalent chromate treatment				

*1: Spring pin ❹ is not available for FJ-6, 8 and 10.
*2: Dust cover ❺ is not included with FJ -30 and over.

LCM
LCR
LCG
LCW
LCX
STM
STG
STS/STL
STR2
UCA2
ULK*
JSK/M2
JSG
JSC3/JSC4
USSD
UFCD
USC
UB
JSB3
LMB
LML
HCM
HCA
LBC
CAC4
UCAC2
CAC-N
UCAC-N
RCS2
RCC2
PCC
SHC
MCP
GLC
MFC
BBS
RRC
GRC
RV3*
NHS
HRL
LN
Hand
Chuk
MecHnd/Chuk
ShkAbs
FJ
FK
SpdContr
Ending

Dimensions: Basic

● FJ-0-3 to 5

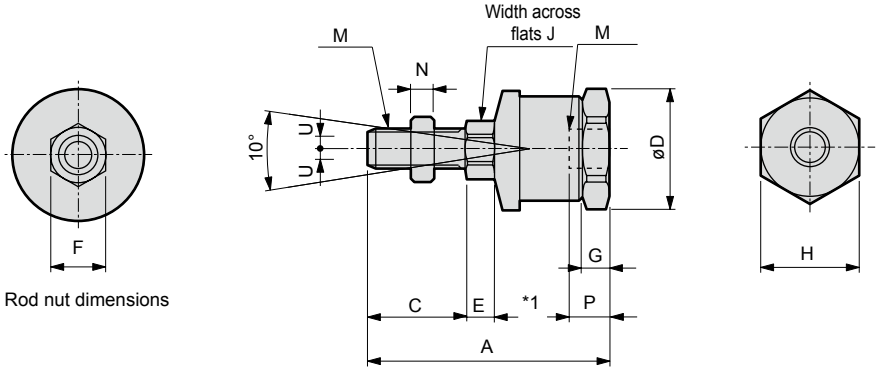

Rod nut dimensions

● FJ-0-6, 8, 10, 36 to 45
(Dust cover is not included with FJ-36 to 45)

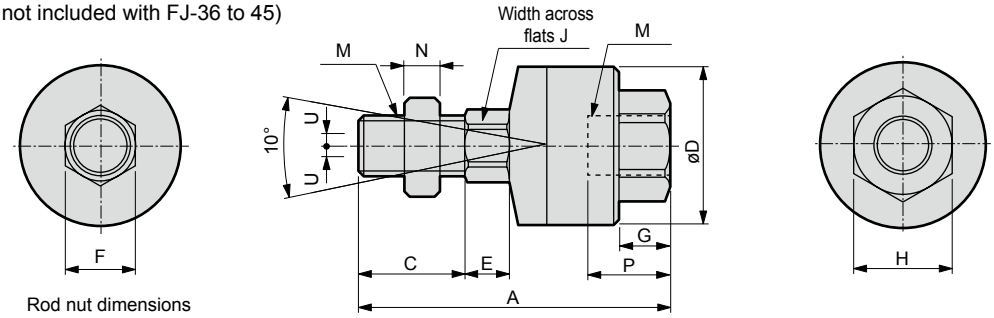

Rod nut dimensions

● FJ-0-12 to 30
(Dust cover is not included with FJ-30)

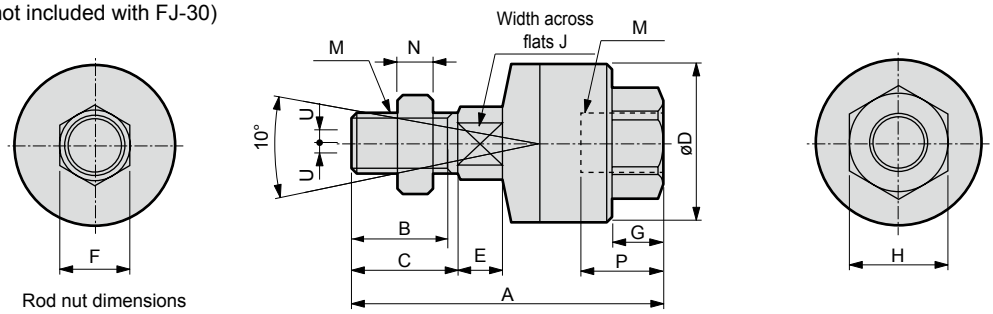

Rod nut dimensions

1: For FJ--3 to 5, strictly observe the screw-in depth (P).

Model No.	Major cylinders	M Nominal port size	M Pitch	A	B	C	D	E	F	G	H	J	N	P *1	Allowable eccentricity U	Max. working tension and compression KN	Weight kg
FJ-O- 3	SCPD3-6/SMG-6	3	0.5	23	——	8.3	12	2.5	5.5	2.5	11	5.5	1.8	4	0.5	0.019	0.012
4	SCPD3-10/SMG-10	4	0.7	26	——	10	12	3.5	7	2.5	11	5.5	2.4	3.7	0.5	0.053	0.012
5	SCPD3-16/SSD/SSD2-12-N/SMG-16	5	0.8	31.6	——	12	15.5	4	8	3.5	14	7	3.2	5.2	0.5	0.121	0.022
6	SSD/SSD2-16-N/SMG-20	6	1.0	45.4	——	15.8	21	4	10	9	17	10	3.6	12	0.75	1.08	0.057
8	CMA2/CMK2/CKV2-20/JSK2/JSM2-20	8	1.0	48.4	——	18.8	21	4	13	9	17	10	5	12	0.75	1.08	0.061
8-1.25	SMG-25/SSD/ SSD2-20-N/SCM-20	8	1.25	48.4	——	18.8	21	4	13	9	17	10	5	12	0.75	1.08	0.061
10	CMA2-30/SMG-32/CMK2/ SCG/CKV2-25/32/FCD-25-N/ SSD/SSD2-25-N/SCM-25/32/ JSK2-25/32/JSM2-30	10	1.25	56.2	——	22	24	7	17	10	19	12	6	12	0.75	2.45	0.092
12	CMA2/CMK2/CKV2-40/JSK2/JSM2-40	12	1.5	58	20.5	23	27	6	19	10	21	12	7	11.8	0.75	2.45	0.12
12-1.25	-	12	1.25	58	20.5	23	27	6	19	10	21	12	7	11.8	0.75	2.45	0.12
14	SCG-40/SCA2-40/FCD-32/40-N SSD/SSD2-32/40-N/SCM-40/JSC3-40	14	1.5	68.5	20	22	32	7	22	13	27	14	8	16.5	1.0	5.88	0.22
16	CAV2-50 COV2-50	16	1.5	84.2	26	29	43	11	24	14	27	16	10	16.9	1.5	10.8	0.4
18	SCG-50/63/SCA2-50/63/ FCD-50/63-N/SSD/SSD2-50/63-N/ SCM-50/63/JSC3-50/63	18	1.5	84.2	26	29	43	11	27	14	27	18	11	16.9	1.5	10.8	0.41
22	SCG-80/SCA2-80/SSD/ SSD2-80-N/SCM-80/JSC3-80	22	1.5	102.5	31	34	53	14	32	17	32	22	13	17.2	2.0	17.6	0.75
26	SCG-100/SCA2-100/SSD/SSD2-100-N/SCM-100/JSC3-100	26	1.5	121.6	39	42	69	15	41	20	41	26	16	20.8	3.0	27.5	1.5
30	SCS2-125/140/JSC4-125/140	30	1.5	145.2	47	50	90	16	46	21	46	30	18	26	3.0	60.8	3.1
36	SCS2-160/JSC4-160	36	1.5	163.5	——	57	108	16	55	22	55	55	21	25	4.0	87.3	4.6
40	SCS2-180/JSC4-180	40	1.5	170.5	——	64	108	16	60	22	55	60	24	25	4.0	87.3	4.7
45	SCS2-200	45	1.5	199.5	——	72	118	18	70	24	60	70	27	35	4.0	108	7.0

Dimensions: Foot

● FJ-L-8 to 12 (* part of FJ-12, 2 widths across flats)

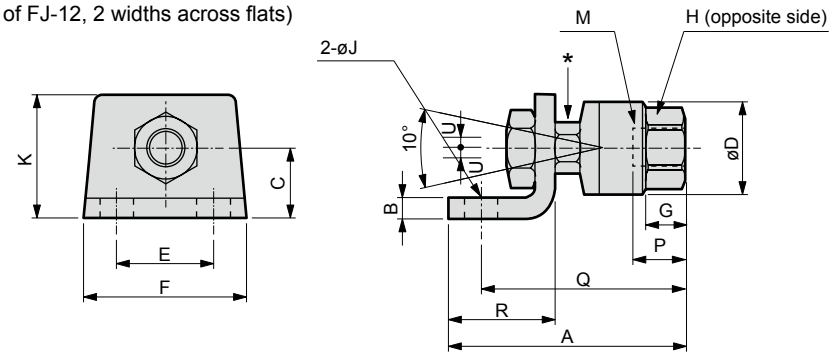

● FJ-L-14

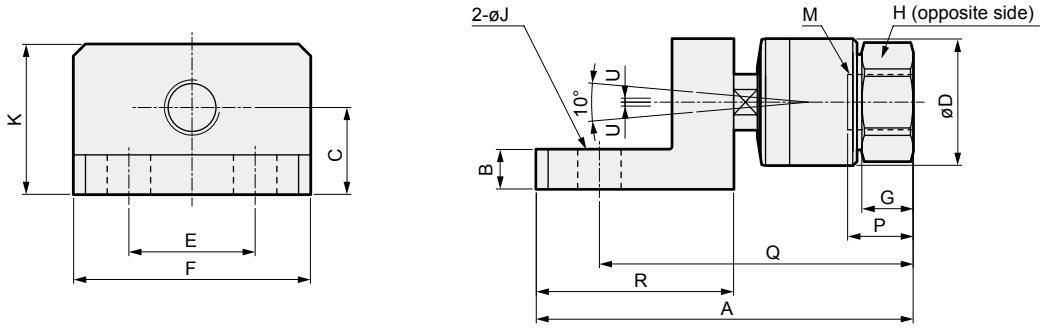

● FJ-L-16 to 45 (* part, 2 widths across flats)

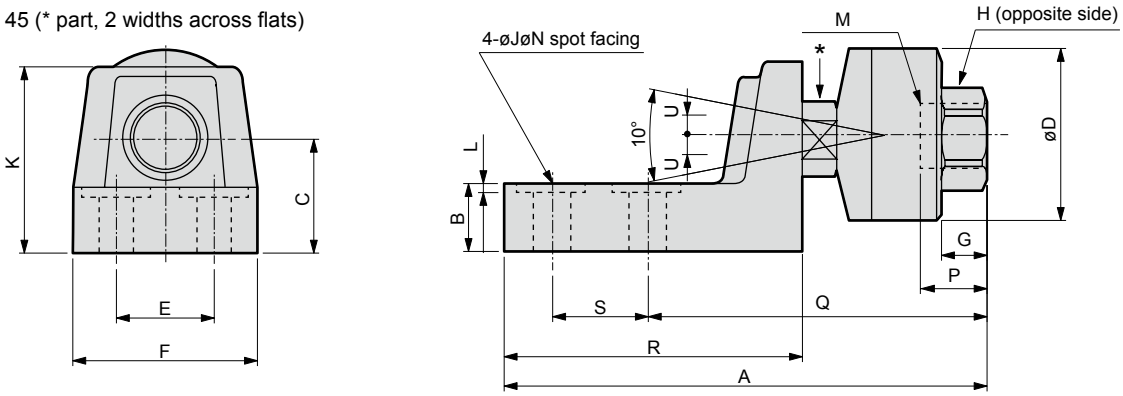

Model No.	Major cylinders	M Nominal port size	M Pitch	A	B	C	D	E	F	G	H	J	K	L	N	P	Q	R	S	Allowable eccentricity U	Max. working tension and compression KN	Weight kg
FJ-L-8	CMA2/CMK2/CKV-20/JSK2/JSM2-20	8	1.0	54.6	3.2	15	21	26	44	9	17	9	25	—	—	12	45.6	25	—	0.75	1.08	0.1
8-1.25	SMG-25/SSD/SSD2-20-N/SCM-20	8	1.25	54.6	3.2	15	21	26	44	9	17	9	25	—	—	12	45.6	25	—	0.75	1.08	0.1
10	CMA2-30/SMG-32/CMK2/SCG/CKV2-25/32/FCD-25-N/SSD/SSD2-25-N/SCM-25/32/JSK2-25/32/JSM2-30	10	1.25	64.5	5	19	24	26	44	10	19	9	32	—	—	12	54.5	30	—	0.75	2.45	0.18
12	CMA2/CMK2/CKV2-40/JSK2/JSM2-40	12	1.5	64.6	5	19	27	26	44	10	21	9	32	—	—	11.8	54.6	30	—	0.75	2.45	0.19
12-1.25	-	12	1.25	64.6	5	19	27	26	44	10	21	9	32	—	—	11.8	54.6	30	—	0.75	2.45	0.19
14	SCG-40/SCA2-40/FCD-32/40-N/SSD/SSD2-32/40-N/SCM-40/JSC3-40	14	1.5	95.5	10	22	32	32	60	13	27	11	38	—	—	16.6	79.5	50	—	1.0	5.88	0.43
16	CAV2-50 COV2-50	16	1.5	140.2	14	28	43	32	60	14	27	11	46	—	—	16.9	93.1	85	32	1.5	10.8	0.4
18	SCG-50/63/SCA2-50/63/FCD-50/63-N/SSD/SSD2-50/63-N/SCM-50/63/JSC3-50/63	18	1.5	140.2	14	28	43	32	60	14	27	11	46	—	—	16.9	93.1	85	32	1.5	10.8	1.1
22	SCG-80/SSD/SSD2-80-N/SCA2-80/SCM-80/JSC3-80	22	1.5	163.5	19	35	53	36	68	17	32	14	55	—	—	17.2	110.5	95	36	2.0	17.6	2.1
26	SCG-100/SCA2-100/SSD/SSD2-100-N/SCM-100/JSC3-100	26	1.5	179.6	24	42	69	36	68	20	41	14	64	1.5	26	20.8	126.6	100	36	3.0	27.5	2.9
30	SCS2-125/140/JSC4-125/140	30	1.5	217.2	35	55	90	46	82	21	46	18	80	1.5	32	26	152.2	122	46	3.0	60.8	5.6
36	SCS2-160/JSC4-160	36	1.5	254.5	41	67	108	56	100	22	55	22	97	—	—	25	177	148	56	4.0	87.3	8.9
40	SCS2-180/JSC4-180	40	1.5	254.5	41	67	108	56	100	22	55	22	97	—	—	25	177	148	56	4.0	87.3	8.8
45	SCS2-200	45	1.5	294	41	70	118	66	125	24	60	26	103	—	—	35	203	166	66	4.0	108	13.2

LCM
LCR
LCG
LCW
LCX
STM
STG
STS/STL
STR2
UCA2
ULK*
JSK/M2
JSG
JSC3/JSC4
USSD
UFCD
USC
UB
JSB3
LMB
LML
HCM
HCA
LBC
CAC4
UCAC2
CAC-N
UCAC-N
RCS2
RCC2
PCC
SHC
MCP
GLC
MFC
BBS
RRC
GRC
RV3*
NHS
HRL
LN
Hand
Chuk
MecHnd/Chuk
ShkAbs
FJ
FK
SpdContr
Ending

Dimensions: Flange

CAD

● FJ-F-8 to 14 (* part of FJ-12 and 14, 2 widths across flats)

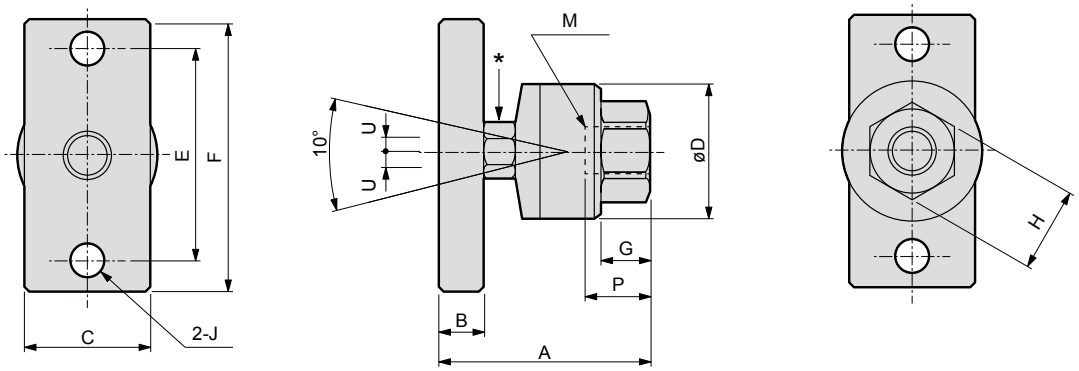

● FJ-F-16 to 45 (* part of FJ-36, 40 and 45, hexagon nut)

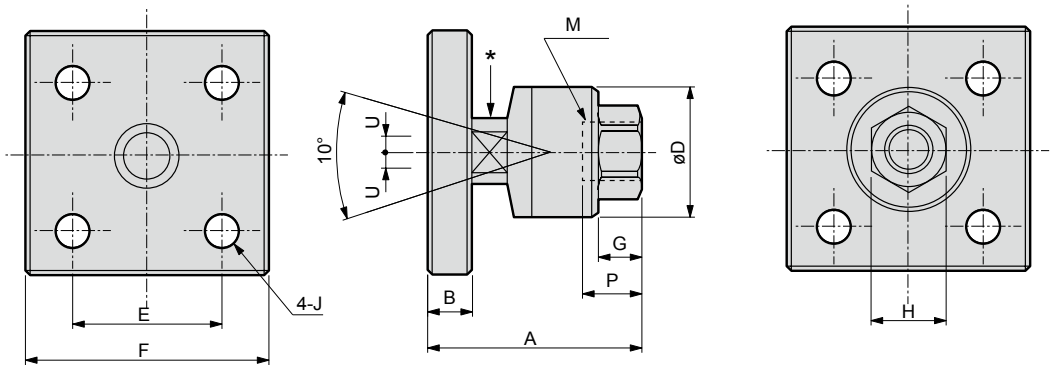

Model No.	Major cylinders	M Nominal port size	M Pitch	A	B	C	D	E	F	G	H	J	P	Allowable eccentricity U	Max. working tension and compression KN	Weight kg
FJ-F- 8	CMA2/CMK2/CKV-20/ JSK2/JSM2-20	8	1.0	35.6	6	19	21	40	52	9	17	6.6	12	0.75	1.08	0.11
8-1.25	SMG-25/SSD/ SSD2-20-N/SCM-20	8	1.25	35.6	6	19	21	40	52	9	17	6.6	12	0.75	1.08	0.11
10	CMA2-30/SMG-32/CMK2/ SCG/CKV2-25/32/FCD-25-N/ SSD/SSD2-25-N/SCM-25/32/ JSK2-25/32/JSM2-30	10	1.25	43.2	9	25	24	44	56	10	19	6.6	12	0.75	2.45	0.18
12	CMA2/CMK2/CKV2-40/ JSK2/JSM2-40	12	1.5	43.6	9	25	27	44	56	10	21	6.6	11.8	0.75	2.45	0.19
12-1.25	-	12	1.25	43.6	9	25	27	44	56	10	21	6.6	11.8	0.75	2.45	0.19
14	SCG-40/SCA2-40/FCD-32/40-N/ SSD/SSD2-32/40-N/SCM-40/JSC3-40	14	1.5	57.5	12	32	32	60	80	13	27	11	16.5	1.0	5.88	0.56
16	CAV2-50/COV2-50	16	1.5	71.2	16	——	43	50	75	14	27	11	16.9	1.5	10.8	1.1
18	SCG-50/63/SCA2-50/63/ FCD-50/63-N/SSD/SSD2-50/63-N/ SCM-50/63/JSC3-50/63	18	1.5	71.2	16	——	43	50	75	14	27	11	16.9	1.5	10.8	1.1
22	SCG-80/SCA2-80/SSD/ SSD2-80-N/SCM-80/JSC3-80	22	1.5	87.5	19	——	53	62	100	17	32	14	17.2	2.0	17.6	1.9
26	SCG-100/SCA2-100/SSD/ SSD2-100-N/SCM-100/JSC3-100	26	1.5	101.6	22	——	69	70	100	20	41	14	20.8	3.0	27.5	2.8
30	SCS2-125/140/JSC4-125/140	30	1.5	120.2	25	——	90	90	125	21	46	18	26	3.0	60.8	5.6
36	SCS2-160/JSC4-160	36	1.5	135	29	——	108	114	150	22	55	22	25	4.0	87.3	9.4
40	SCS2-180/JSC4-180	40	1.5	135	29	——	108	114	150	22	55	22	25	4.0	87.3	9.3
45	SCS2-200	45	1.5	159	32	——	118	132	175	24	60	26	35	4.0	108	13.4

Pneumatic components

Safety Precautions

Be sure to read this section before use.
Refer to Intro Page 73 for general information of the cylinder, and to Intro Page 80 for general information of the cylinder switch.

Product-specific cautions: Floating fitting FJ Series

Mounting, installation and adjustment

⚠ WARNING

- When screwing the male thread of a rod onto the female thread of a socket or case, check that it does not hit the bottom.
  If this floating fitting is used with the rod butted against the bottom, the ball stud does not float and fails to function properly.
  As a guide, the thread should be screwed onto the female thread to one or two turns from the bottom end position.
  For FJ-3 to 5, strictly observe the screw-in dimensions (P).

- When connecting the object being driven and the cylinder rod with a floating fitting, securely fix the components by fastening the screws with a tightening torque that is appropriate for the thread size. When there are further worries of loosening during use, take measures to prevent loosening by securing the component with a pin or by applying an adhesive.
  If the connected portion loosens and becomes detached, runaway or collapse, etc., of the object being driven may cause damage to the device or lead to injuries, etc.

- The screw section (ball stud) can be rotated, but is not a rotary fitting. Do not use this for rotation purposes.

Use/maintenance

⚠ WARNING

- Do not disassemble and reuse the product.

FK

Simplified floating fitting

Overview

This simplified floating fitting eliminates misalignment and parallelism defects during cylinder mounting, and realizes smooth rod actuation.

Features

Easy centering/parallelism alignment

This can be set quickly

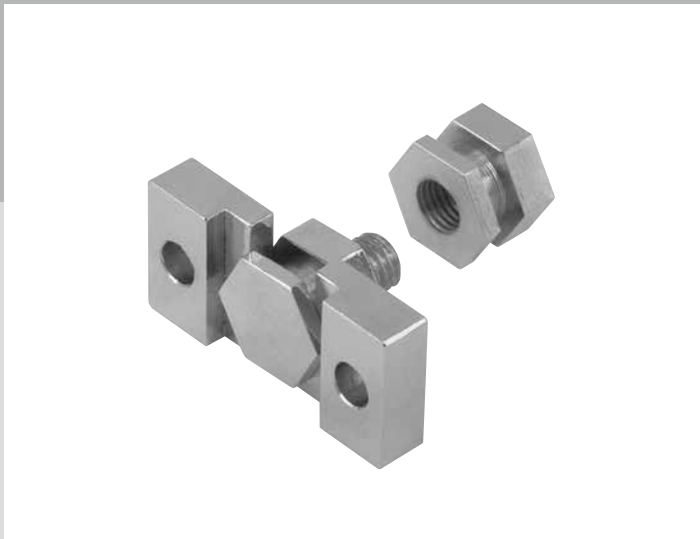

CONTENTS

Series variation 1955
● Simplified floating fitting (FK) 1956
⚠ Safety precautions 1959

●: Standard, ▢: Not available

Variation	Model No.	Thread size																Page
		M3x 0.5	M4x 0.7	M5x 0.8	M6x 1.0	M8x 1.0	M8x 1.25	M10x 1.25	M10x 1.5	M12x 1.5	M14x 1.5	M16x 1.5	M16x 2.0	M18x 1.5	M20x 2.5	M22x 1.5	M26x 1.5	
Male thread	FK-*-N	●	●	●	●		●		●				●		●			1956
Female thread	FK	●	●	●	●	●	●	●		●	●	●		●		●	●	

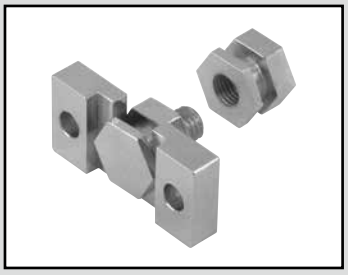

Simplified floating fitting

FK Series

● Cylinder diameter: ø6 to ø100

RoHS CAD

Specifications

Model No.		Allowable load *1 (N)	Allowable eccentricity (mm)	Backlash amount in thrust direction (mm)
Male thread	Female thread			
FK-M3-N	FK-M3	63	±0.3	0.1 to 0.3
FK-M4-N	FK-M4	110		
FK-M5-N	FK-M5	179		
FK-M6-N	FK-M6	253		
FK-M8-N	FK-M8×1.0	462		
——	FK-M8×1.25	462		
FK-M10-N	FK-M10	734		
——	FK-M12	1069		
——	FK-M14	1466		
FK-M16-N	FK-M16	2003	±0.7	
——	FK-M18	2448		
FK-M20-N	——	3130		
——	FK-M22	3896		
——	FK-M26	6219		

*1: Allowable load indicates static load.

How to order

● Simplified floating fitting

FK - M3-N

Model No.

Ⓐ Thread size

Code	Description	
Ⓐ Thread size		
M3-N	M3×0.5	Male thread
M4-N	M4×0.7	
M5-N	M5×0.8	
M6-N	M6×1.0	
M8-N	M8×1.25	
M10-N	M10×1.5	
M16-N	M16×2.0	
M20-N	M20×2.5	
M3	M3×0.5	Female thread
M4	M4×0.7	
M5	M5×0.8	
M6	M6×1.0	
M8×1.0	M8×1.0	
M8×1.25	M8×1.25	
M10	M10×1.25	
M12	M12×1.5	
M14	M14×1.5	
M16	M16×1.5	
M18	M18×1.5	
M22	M22×1.5	
M26	M26×1.5	

Specifications for rechargeable battery (Catalog No. CC-1226A)

FK - [Thread size] - P40

● Design compatible with rechargeable battery manufacturing process

* Contact CKD for details.

Dimensions

Material : Steel
Surface treatment : Nickeling

● Bracket (1)

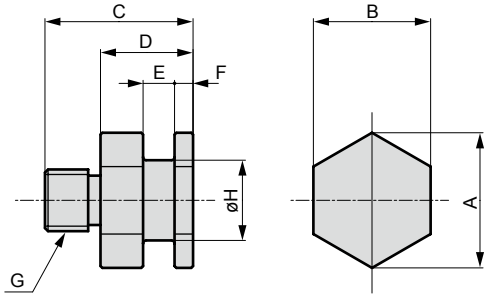

● Bracket (2)

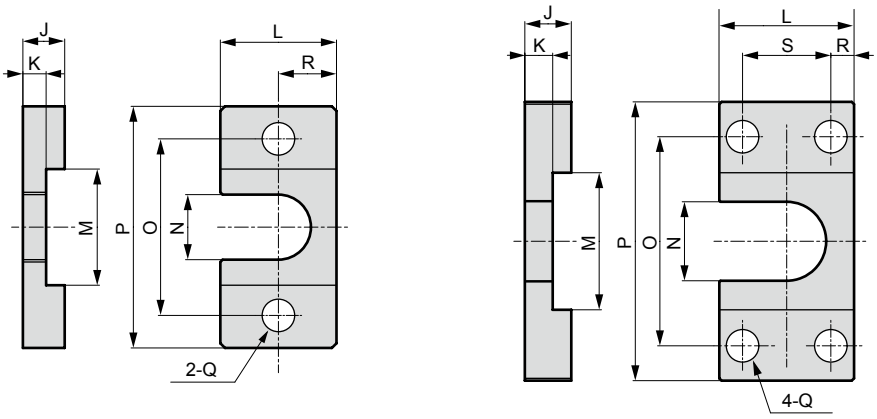

M3 to M16 M20

Bracket (1)

Model No.	Cylinder	A	B	C	D	E	F	G	H	Weight g
FK-M3-N	SSD/SSD2-12	11.6	10	15	10	$3.1^{+0.1}_{0}$	2	M3×0.5	6	5.3
FK-M4-N	SSD/SSD2-16	11.6	10	15.5	10	$3.1^{+0.1}_{0}$	2	M4×0.7	6	5.5
FK-M5-N	SSD/SSD2-20, FCD-25	13.9	12	16.5	10	$3.1^{+0.1}_{0}$	2	M5×0.8	8	8.3
FK-M6-N	SSD/SSD2-25, FCD-32	13.9	12	19	10	$3.1^{+0.1}_{0}$	2	M6×1.0	8	8.9
FK-M8-N	SSD/SSD2-32, 40, FCD-40, 50	21.9	19	23	15	$5.1^{+0.1}_{0}$	3	M8×1.25	13	30.8
FK-M10-N	SSD/SSD2-50, 63, FCD-63	21.9	19	24	15	$5.1^{+0.1}_{0}$	3	M10×1.5	13	32.7
FK-M16-N	SSD/SSD2-80	37	32	31	20	$7.1^{+0.1}_{0}$	4	M16×2.0	23	122.5
FK-M20-N	SSD/SSD2-100	53.1	46	43	28	$12.1^{+0.1}_{0}$	7	M20×2.5	32	333

Bracket (2)

Model No.	Cylinder	J	K	L	M	N	O	P	Q	R	S	Weight g
FK-M3-N	SSD/SSD2-12	6	$3^{0}_{-0.1}$	16	14	7	24	34	4.5	8	—	16
FK-M4-N	SSD/SSD2-16	6	$3^{0}_{-0.1}$	16	14	7	24	34	4.5	8	—	16
FK-M5-N	SSD/SSD2-20, FCD-25	6	$3^{0}_{-0.1}$	19	16	9	26	36	4.5	9.5	—	19.6
FK-M6-N	SSD/SSD2-25, FCD-32	6	$3^{0}_{-0.1}$	19	16	9	26	36	4.5	9.5	—	19.6
FK-M8-N	SSD/SSD2-32, 40, FCD-40, 50	9	$5^{0}_{-0.1}$	25	25	14	38	52	7	12.5	—	54.5
FK-M10-N	SSD/SSD2-50, 63, FCD-63	9	$5^{0}_{-0.1}$	25	25	14	38	52	7	12.5	—	54.5
FK-M16-N	SSD/SSD2-80	12	$7^{0}_{-0.1}$	44	42	25	62	85	11	22	—	216
FK-M20-N	SSD/SSD2-100	22	$12^{0}_{-0.1}$	65	59	34	90	120	14	13.5	38	788

LCM
LCR
LCG
LCW
LCX
STM
STG
STS/STL
STR2
UCA2
ULK*
JSK/M2
JSG
JSC3/JSC4
USSD
UFCD
USC
UB
JSB3
LMB
LML
HCM
HCA
LBC
CAC4
UCAC2
CAC-N
UCAC-N
RCS2
RCC2
PCC
SHC
MCP
GLC
MFC
BBS
RRC
GRC
RV3*
NHS
HRL
LN
Hand
Chuk
MecHnd/Chuk
ShkAbs
FJ
FK
SpdContr
Ending

Dimensions

Material : Steel
Surface treatment : Nickeling

● Bracket (1)

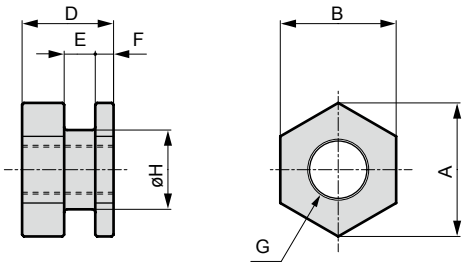

● Bracket (2)

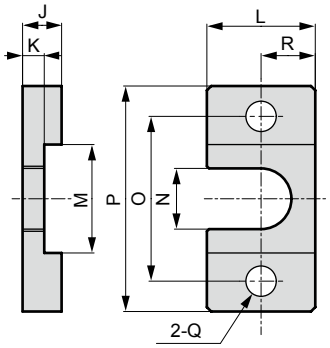

M3 to M18

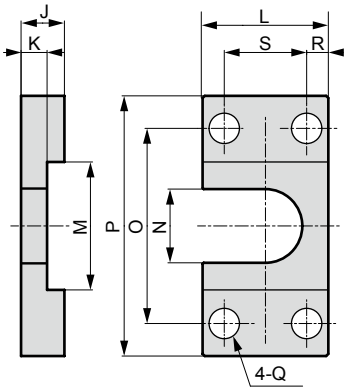

M22 to M26

Bracket (1)

Model No.	Cylinder	A	B	D	E	F	G	H	Weight g
FK-M3	SCPD3-6, CAT-6, SMG-6	11.6	10	10	$3.1^{+0.1}_{0}$	2	M3×0.5	6	4.6
FK-M4	SCPD3-10, CAT-10, SMG-10	11.6	10	10	$3.1^{+0.1}_{0}$	2	M4×0.7	6	4.1
FK-M5	SCPD3-16, CAT-15, SMG-16 SSD-12-N	13.9	12	10	$3.1^{+0.1}_{0}$	2	M5×0.8	8	6.2
FK-M6	SMG-20, SSD/SSD2-16-N	13.9	12	10	$3.1^{+0.1}_{0}$	2	M6×1.0	8	5.7
FK-M8×1.0	CMK2-20, CMA2-20, JSK2-20, JSM2-20	21.9	19	15	$5.1^{+0.1}_{0}$	3	M8×1.0	13	23
FK-M8×1.25	SMG-25, SSD/SSD2-20-N, SCM-20	21.9	19	15	$5.1^{+0.1}_{0}$	3	M8×1.25	13	23.4
FK-M10	CMK2-25/32, CMA2-30, SMG-32, SSD/SSD2-25-N, SCG-32, SCM-25/32, FCD-25-N, JSK2-25/32, JSM2-30	21.9	19	15	$5.1^{+0.1}_{0}$	3	M10×1.25	13	20.2
FK-M12	CMK2-40, CMA2-40, JSK2-40, JSM2-40	27.7	24	15	$5.1^{+0.1}_{0}$	3	M12×1.5	18	35.7
FK-M14	SCA2-40, SSD/SSD2-32/40-N/SCG-40, SCM-40, FCD-32/40-N, JSC3-40	27.7	24	15	$5.1^{+0.1}_{0}$	3	M14×1.5	18	31.2
FK-M16	CAV2-50	37	32	20	$7.1^{+0.1}_{0}$	4	M16×1.5	23	81.3
FK-M18	SCA2-50/63, SSD/SSD2-50/63-N, SCM-50/63, SCG-50/63, FCD-50/63-N, JSC3-50/63	37	32	20	$7.1^{+0.1}_{0}$	4	M18×1.5	23	73.1
FK-M22	SCA2-80, SSD/SSD2-80-N, JSC3-80, SCG-80, SCM-80, CAV2-75/100	53.1	46	28	$12.1^{+0.1}_{0}$	7	M22×1.5	32	226
FK-M26	SCA2-100, SSD/SSD2-100-N, SCM-100, JSC3-100, SCG-100	53.1	46	28	$12.1^{+0.1}_{0}$	7	M26×1.5	32	193

Bracket (2)

Model No.	Cylinder	J	K	L	M	N	O	P	Q	R	S	Weight g
FK-M3	SCPD3-6, CAT-6, SMG-6	6	$3^{0}_{-0.1}$	16	14	7	24	34	4.5	8	—	16
FK-M4	SCPD3-10, CAT-10, SMG-10	6	$3^{0}_{-0.1}$	16	14	7	24	34	4.5	8	—	16
FK-M5	SCPD3-16, CAT-15, SMG-16 SSD/SSD2-12-N	6	$3^{0}_{-0.1}$	19	16	9	26	36	4.5	9.5	—	19.6
FK-M6	SMG-20, SSD/SSD2-16-N	6	$3^{0}_{-0.1}$	19	16	9	26	36	4.5	9.5	—	19.6
FK-M8×1.0	CMK2-20, CMA2-20, JSK2-20, JSM2-20	9	$5^{0}_{-0.1}$	25	25	14	38	52	7	12.5	—	54.5
FK-M8×1.25	SMG-25, SSD/SSD2-20-N, SCM-20	9	$5^{0}_{-0.1}$	25	25	14	38	52	7	12.5	—	54.5
FK-M10	CMK2-25/32, CMA2-30, SMG-32, SSD/SSD2-25-N, SCG-32, SCM-25/32, FCD-25-N, JSK2-25/32, JSM2-30	9	$5^{0}_{-0.1}$	25	25	14	38	52	7	12.5	—	54.5
FK-M12	CMK2-40, CMA2-40	9	$5^{0}_{-0.1}$	32	32	19	50	70	9	16	—	94.5
FK-M14	SCA2-40, SSD/SSD2-32/40-N/SCG-40, SCM-40, FCD-32/40-N, JSC3-40	9	$5^{0}_{-0.1}$	32	32	19	50	70	9	16	—	94.5
FK-M16	CAV2-50	12	$7^{0}_{-0.1}$	44	42	25	62	85	11	22	—	216
FK-M18	SCA2-50/63, SSD/SSD2-50/63-N, SCM-50/63, SCG-50/63, FCD-50/63-N, JSC3-50/63	12	$7^{0}_{-0.1}$	44	42	25	62	85	11	22	—	216
FK-M22	SCA2-80, SSD/SSD2-80-N, JSC3-80, SCG-80, SCM-80, CAV2-75/100	22	$12^{0}_{-0.1}$	65	59	34	90	120	14	13.5	38	788
FK-M26	SCA2-100, SSD/SSD2-100-N, SCM-100, JSC3-100, SCG-100	22	$12^{0}_{-0.1}$	65	59	34	90	120	14	13.5	38	788

Pneumatic components

Safety Precautions

Be sure to read this section before use.
Refer to Intro Page 73 for general information of the cylinder, and to Intro Page 80 for general information of the cylinder switch.

Product-specific cautions: Simplified floating fitting FK Series

Mounting, installation and adjustment

WARNING

- When connecting the object being driven and the cylinder rod with a simplified floating fitting, securely fix the components by fastening the screws with a tightening torque that is appropriate for the thread size. When there are further worries of loosening during use, take measures to prevent loosening by securing the component with a pin or by applying an adhesive.

- The screw section (Bracket (1)) can be rotated but is not a rotary fitting. Do not use this for rotary purposes.

Speed controller

SC*

■ **Pneumatic auxiliary components**

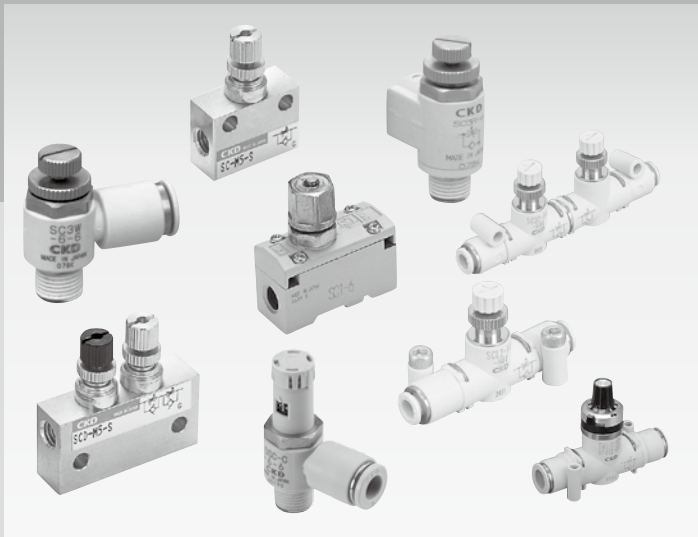

CONTENTS

Series variation	1962
● Speed controller with adjusting dial (DSC)	1966
● Needle valve with adjusting dial (DVL)	1980
● Elbow/push-in fitting (SC3W)	1988
● Universal/push-in fitting (SC3U)	1992
● Line type/with push-in fitting (SCL2)	1998
● In/out line type/with push-in fitting (SCD2)	1998
● Needle valve/line type/with push-in fitting (SCL2-N)	2002
● Stainless steel anti-corrosion (SC3P)	2008
● Direct port/elbow (SC3R)	2012
● Miniature (SC-M3/M5)	2014
● Miniature in/out (SCD-M3/M5)	2016
● Medium bore size Rc1/8 to Rc1/2 (SC1)	2020
● Large bore size Rc3/4 to Rc2 (SC)	2022
● Outdoor Series Medium bore size (SC1-W)	2024
⚠ Safety precautions	2026

Speed controller

● Applicable to ø2.5 to ø450 cylinders

Values in ( ) are for low speed, fine speed, low flow rate or fine flow rate.

Model/outline	Model No.	Port size (Rc or R)											Compatible tube O.D.						Effective cross-sectional area (mm2)		Flow rate (ℓ/min) ANR 0.5 MPa		Cylinder bore size (mm) reference	Page
		M3	M5	1/8	1/4	3/8	1/2	3/4	1	1 1/4	1 1/2	2	ø3.2	ø4	ø6	ø8	ø10	ø12	Free flow	Controlled flow	Free flow	Controlled flow		
● Speed controller with adjusting dial	DSC-C-M5-3		●										●						1.3	0.9(0.3)	87	60(20)	ø6 to ø25	1966
	DSC-C-M5-4		●											●					1.5	0.9(0.3)(0.1)	100	60(20)(6.7)	ø6 to ø25	
	DSC-C-M5-6		●												●				1.5	0.9(0.3)(0.1)	100	60(20)(6.7)	ø6 to ø25	
	DSC-(C-)6-4			●										●					3.2	2.4(0.9)(0.2)	210	160(60)(13)	ø15 to ø32	
	DSC-(C-)6-6			●											●				4	3(0.9)(0.2)	270	200(60)(13)	ø15 to ø32	
	DSC-(C-)6-8			●												●			4	3(0.9)(0.2)	270	200(60)(13)	ø15 to ø32	
	DSC-8-6				●										●				7	5(2)	470	320(130)	ø20 to ø50	
	DSC-8-8				●											●			8	6(2)	530	400(130)	ø20 to ø50	
	DSC-8-10				●												●		8	6(2)	530	400(130)	ø20 to ø50	
	DSC-10-6					●									●				10	6(4)	670	400(270)	ø32 to ø75	
	DSC-10-8					●										●			15	10.5(4)	1000	700(270)	ø32 to ø75	
	DSC-10-10					●											●		16	12(4)	1070	800(270)	ø32 to ø75	
	DSC-10-12					●												●	16	12(4)	1070	800(270)	ø32 to ø75	
	DSC-15-10						●										●		22	17(6)	1470	1120(400)	ø40 to ø100	
	DSC-15-12						●											●	24	17.5(6)	1600	1200(400)	ø40 to ø100	
	DSC-S□-06-H44													●					2.5	2.4(0.9)(0.2)	170	160(60)(13)	ø15 to ø32	1974
	DSC-S□-06-H66														●				4.5	3(0.9)(0.2)	300	200(60)(13)	ø15 to ø32	
	DSC-S□-08-H66														●				6	5(2)	400	360(130)	ø20 to ø50	
	DSC-S□-08-H88															●			8	6(2)	550	400(130)	ø20 to ø50	
	DSC-S□-10-H88															●			13.5	10.5(4)	900	710(270)	ø32 to ø75	
	DSC-S□-10-H1010																●		16.5	12(4)	1100	780(270)	ø32 to ø75	
	DSC-S□-10-H1212																	●	18	12(4)	1200	780(270)	ø32 to ø75	
● Needle valve with adjusting dial, check valve	DVL-S-06-H44-020													●					2.5	0.15	170	18	ø6 to ø40	1980
	DVL-S-06-H66-020														●				4.5	0.15	300	18	ø6 to ø40	
	DVL-S-06-H44-080													●					2.5	1.2	170	80	ø6 to ø40	
	DVL-S-06-H66-080														●				4.5	1.2	300	80	ø6 to ø40	
	DVL-S-06-H66-160														●				4.5	2.5	300	160	ø6 to ø40	
	DVL-S-08-H66-240														●				6	3.6	400	240	ø20 to ø50	
	DVL-S-08-H88-240															●			8	3.6	550	240	ø20 to ø50	
	DVL-S-10-H88-400															●			13.5	6.6	900	440	ø32 to ø75	
	DVL-S-10-H1010-400																●		16.5	6.6	1100	440	ø32 to ø75	
	DVL-S-10-H1212-400																	●	18	6.6	1200	440	ø32 to ø75	
● Needle valve with adjusting dial, needle valve	DVL-N-06-H44-020													●					0.15		18		-	1980
	DVL-N-06-H66-020														●				0.15		18		-	
	DVL-N-06-H44-080													●					1.2		80		-	
	DVL-N-06-H66-080														●				1.2		80		-	
	DVL-N-06-H66-160														●				2.4		160		-	
	DVL-N-08-H66-240														●				3.6		240		-	
	DVL-N-08-H88-240															●			3.6		240		-	
	DVL-N-10-H88-400															●			6.6		440		-	
	DVL-N-10-H1010-400																●		6.6		440		-	
	DVL-N-10-H1212-400																	●	6.6		440		-	

Values in ( ) indicate low speed.

Model/outline	Model No.	Port size (Rc or R)											Compatible tube O.D.						Effective cross-sectional area (mm²)		Flow rate (ℓ/min) ANR 0.5 MPa		Cylinder bore size (mm) reference	Page
		M3	M5	1/8	1/4	3/8	1/2	3/4	1	1 1/4	1 1/2	2	ø3.2	ø4	ø6	ø8	ø10	ø12	Free flow	Controlled flow	Free flow	Controlled flow		
● Elbow with push-in fitting	SC3W-M3-3	●											●						0.4(0.3)	0.3(0.08)	27(20)	20(5.9)	ø4 to ø8	1988
	SC3W-M3-4	●												●					0.4(0.3)	0.3(0.08)	27(20)	20(5.9)	ø4 to ø8	
	SC3W-M5-3	●	●										●						1.3(1.2)	1.2(0.1)	87(80)	80(6.7)	ø6 to ø25	
	SC3W-M5-4		●											●					1.3(1.2)	1.2(0.1)	87(80)	80(6.7)	ø6 to ø25	
	SC3W-M5-6		●												●				1.3(1.2)	1.2(0.1)	87(80)	80(6.7)	ø6 to ø25	
	SC3W-6-4			●										●					3.2(3.2)	2.8(0.2)	210(210)	190(13)	ø15 to ø32	
	SC3W-6-6			●											●				4.0(4.0)	3.6(0.2)	270(270)	240(13)	ø15 to ø32	
	SC3W-6-8			●												●			4	3.6	270	240	ø15 to ø32	
	SC3W-8-6				●										●				7	6.5	470	430	ø20 to ø50	
	SC3W-8-8				●											●			7.5	7	500	470	ø20 to ø50	
	SC3W-8-10				●												●		8	7	530	470	ø20 to ø50	
	SC3W-10-6					●									●				10	10	650	650	ø32 to ø75	
	SC3W-10-8					●										●			15	14	1000	930	ø32 to ø75	
	SC3W-10-10					●											●		16	15	1100	1000	ø32 to ø75	
	SC3W-10-12					●												●	16	15	1100	1000	ø32 to ø75	
	SC3W-15-10						●										●		22	22	1500	1500	ø40 to ø100	
	SC3W-15-12						●											●	24	24	1600	1600	ø40 to ø100	
● Universal with push-in fitting	SC3U-M3-3	●											●						0.45(0.35)	0.5(0.08)	31(24)	34(5.4)	ø4 to ø8	1992
	SC3U-M3-4	●												●					0.45(0.35)	0.5(0.08)	31(24)	34(5.4)	ø4 to ø8	
	SC3U-M5-3		●										●						1.4(1.4)	1.4(0.14)	95(95)	95(9.5)	ø6 to ø25	
	SC3U-M5-4		●											●					1.4(1.4)	1.4(0.14)	95(95)	95(9.5)	ø6 to ø25	
	SC3U-M5-6		●												●				1.6(1.4)	1.4(0.14)	105(95)	95(9.5)	ø6 to ø25	
	SC3U-6-4			●										●					3.2(3.2)	2.8(0.25)	215(215)	190(17)	ø15 to ø32	
	SC3U-6-6			●											●				4(3.7)	3.8(0.25)	270(245)	260(17)	ø15 to ø32	
	SC3U-6-8			●												●			4	3.8	270	260	ø15 to ø32	
	SC3U-8-6				●										●				7	6.5	475	440	ø20 to ø50	
	SC3U-8-8				●											●			7.5	7	510	475	ø20 to ø50	
	SC3U-8-10				●												●		8	7	540	475	ø20 to ø50	
	SC3U-10-8					●										●			14.5	14	985	950	ø32 to ø75	
	SC3U-10-10					●											●		16	17	1090	1150	ø32 to ø75	
	SC3U-10-12					●												●	16	18	1090	1220	ø32 to ø75	
	SC3U-15-10						●										●		22	22	1500	1500	ø40 to ø100	
	SC3U-15-12						●											●	24	24	1630	1630	ø40 to ø100	

LCM
LCR
LCG
LCW
LCX
STM
STG
STS/STL
STR2
UCA2
ULK*
JSK/M2
JSG
JSC3/JSC4
USSD
UFCD
USC
UB
JSB3
LMB
LML
HCM
HCA
LBC
CAC4
UCAC2
CAC-N
UCAC-N
RCS2
RCC2
PCC
SHC
MCP
GLC
MFC
BBS
RRC
GRC
RV3*
NHS
HRL
LN
Hand
Chuk
MecHnd/Chuk
ShkAbs
FJ
FK
SpdContr
Ending

Values in ( ) are for low speed or fine speed.

Model/outline	Model No.	Port size (Rc or R)											Compatible tube O.D.							Effective cross-sectional area (mm^2)		Flow rate (ℓ/min) ANR 0.5 MPa		Cylinder bore size (mm) reference	Page
		M3	M5	1/8	1/4	3/8	1/2	3/4	1	1 1/4	1 1/2	2	ø1.8	ø3.2	ø4	ø6	ø8	ø10	ø12	Free flow	Controlled flow	Free flow	Controlled flow		
● Line type with push-in fitting	SCL2-04-H22												●							(0.2)	(0.15)	(13)	(10)	ø4 to ø25	1998
	SCL2-04-H42												●		●					(0.2)	(0.15)	(13)	(10)	ø4 to ø25	
	SCL2-04-H24												●		●					(0.2)	(0.15)	(13)	(10)	ø4 to ø25	
	SCL2-04-H44														●					1.9	1.9(0.2)	130	130(13)	ø4 to ø25	
	SCL2-06-H66															●				4.5	4.5(0.2)	300	130(13)	ø6 to ø40	
	SCL2-08-H66															●				6	6	400	400	ø20 to ø50	
	SCL2-08-H88																●			8	8	550	550	ø20 to ø50	
	SCL2-10-H88																●			13.5	13.5	900	900	ø32 to ø75	
	SCL2-10-H1010																	●		16.5	16.5	1100	1100	ø32 to ø75	
	SCL2-10-H1212																		●	18	18	1200	1200	ø32 to ø75	
● In/out line type with push-in fitting	SCD2-04-H22												●							-	(0.15)	-	(10)	ø4 to ø25	1998
	SCD2-04-H42												●		●					-	(0.15)	-	(10)	ø4 to ø25	
	SCD2-04-H44														●					-	1.5(0.2)	-	100(13)	ø4 to ø25	
	SCD2-06-H66															●				-	3.7(0.2)	-	250(13)	ø6 to ø40	
	SCD2-08-H66															●				-	5	-	330	ø20 to ø50	
	SCD2-08-H88																●			-	6	-	400	ø20 to ø50	
	SCD2-10-H88																●			-	11	-	750	ø32 to ø75	
	SCD2-10-H1010																	●		-	12.5	-	850	ø32 to ø75	
	SCD2-10-H1212																		●	-	13	-	900	ø32 to ø75	
● Needle valve	SCL2-N-04-H44-010														●					-	0.2	-	13	-	2002
	SCL2-N-04-H44-050														●					-	0.7	-	50	-	
	SCL2-N-06-H66-010															●				-	0.2	-	13	-	
	SCL2-N-06-H66-050															●				-	0.7	-	50	-	
	SCL2-N-06-H66-150															●				-	2.2	-	150	-	
	SCL2-N-08-H66-300															●				-	4.5	-	300	-	
	SCL2-N-08-H88-300																●			-	4.5	-	300	-	

LCM
LCR
LCG
LCW
LCX
STM
STG
STS/STL
STR2
UCA2
ULK*
JSK/M2
JSG
JSC3/JSC4
USSD
UFCD
USC
UB
JSB3
LMB
LML
HCM
HCA
LBC
CAC4
UCAC2
CAC-N
UCAC-N
RCS2
RCC2
PCC
SHC
MCP
GLC
MFC
BBS
RRC
GRC
RV3*
NHS
HRL
LN
Hand
Chuk
MecHnd/Chuk
ShkAbs
FJ
FK
SpdContr
Ending

Values in ( ) are for low speed or fine speed.

Model/outline	Model No.	Port size (Rc or R)											Compatible tube O.D.						Effective cross-sectional area (mm^2)		Flow rate (ℓ/min) ANR 0.5 MPa		Cylinder bore size (mm) reference	Page
		M3	M5	1/8	1/4	3/8	1/2	3/4	1	1 1/4	1 1/2	2	ø3.2	ø4	ø6	ø8	ø10	ø12	Free flow	Controlled flow	Free flow	Controlled flow		
● Stainless steel anti-corrosion	SC3P-M5-4		●											●					0.9	1.1	55	70	ø6 to ø25	2008
	SC3P-M5-6		●												●				0.9	1.1	55	70	ø6 to ø25	
	SC3P-6-4			●										●					3	2.3	200	150	ø15 to ø32	
	SC3P-6-6			●											●				3	2.3	200	150	ø15 to ø32	
	SC3P-6-8			●												●			3.5	2.3	230	150	ø15 to ø32	
	SC3P-8-6				●										●				5.9	4	390	270	ø20 to ø50	
	SC3P-8-8				●											●			6	4	400	270	ø20 to ø50	
	SC3P-8-10				●												●		6	4	400	270	ø20 to ø50	
	SC3P-10-6					●									●				9	8	600	550	ø32 to ø75	
	SC3P-10-8					●										●			12	12.8	800	850	ø32 to ø75	
	SC3P-10-10					●											●		12	14	800	920	ø32 to ø75	
	SC3P-10-12					●												●	12.5	14	840	920	ø32 to ø75	
	SC3P-15-8						●									●			17	16.5	1140	1100	ø40 to ø100	
	SC3P-15-10						●										●		21	22	1380	1450	ø40 to ø100	
	SC3P-15-12						●											●	21	24	1380	1600	ø40 to ø100	
● Direct port/ elbow	SC3R-M5		●																1.2	0.7	80	47	ø6 to ø16	2012
	SC3R-6			●															4.0	3.6	270	240	ø15 to ø32	
	SC3R-8				●														7.5	7	500	470	ø20 to ø50	
	SC3R-10					●													16	15	1100	1100	ø32 to ø75	
	SC3R-15						●												24	24	1600	1600	ø40 to ø110	
● Miniature speed controller	SC-M3	●																	0.3	0.25	20	16	ø2.5 to ø10	2014
	SC-M5		●																0.8	0.7(0.1)	53	47(6.7)	ø6 to ø25	
● Miniature meter-in meter-out speed controller	SCD-M3	●																	0.2		13		ø4 to ø8	2016
	SCD-M5		●																0.55(0.1)		37(6.7)		ø6 to ø25	
● Medium bore size Rc1/8 to Rc1/2	SC1-6			●															11	8	730	530	ø20 to ø50	2020
	SC1-8				●														14	13	930	870	ø32 to ø75	
	SC1-10					●													39	22	2600	1500	ø50 to ø140	
	SC1-15						●												43	36	2900	2400	ø80 to ø160	
● Large bore size Rc3/4 to Rc2	SC-20A							●											155	125	10300	8300	ø100 to ø200	2022
	SC-25A								●										260	280	17400	18700	ø140 to ø250	
	SC-32A									●									1000	1000	68000	68000	ø300 to ø450	
	SC-40A										●								1000	1000	68000	68000	ø300 to ø450	
	SC-50A											●							1500	1400	97000	91000	ø450 to	
● Outdoor Series Medium bore size Rc1/4 to Rc1/2	SC1-8-W					●													14	13	930	870	ø32 to ø75	2024
	SC1-10-W						●												39	22	2600	1500	ø50 to ø140	
	SC1-15-W							●											43	36	2900	2400	ø80 to ø160	

LCM
LCR
LCG
LCW
LCX
STM
STG
STS/STL
STR2
UCA2
ULK*
JSK/M2
JSG
JSC3/JSC4
USSD
UFCD
USC
UB
JSB3
LMB
LML
HCM
HCA
LBC
CAC4
UCAC2
CAC-N
UCAC-N
RCS2
RCC2
PCC
SHC
MCP
GLC
MFC
BBS
RRC
GRC
RV3*
NHS
HRL
LN
Hand
Chuk
MecHnd/Chuk
ShkAbs
FJ
FK
SpdContr
Ending

Flow rate can be seen!

An inline type is added to the speed controller featuring a dial with linear flow characteristics

[Received the 2016 Good Design Award]

Inline

Unrestricted mounting

The mounting area rotates by 360 degrees, enabling mounting and installation from the base, side, or panel, and no mounting bracket is required.

Example of base mounting

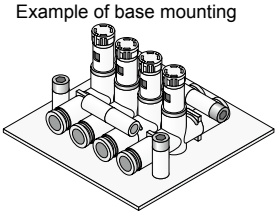

Example of wall mounting

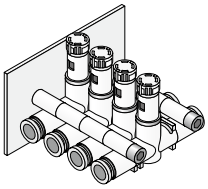

Example of panel mounting

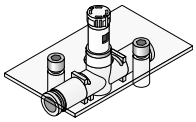

Dial display direction can be selected

The dial display direction can be selected according to the installation direction.

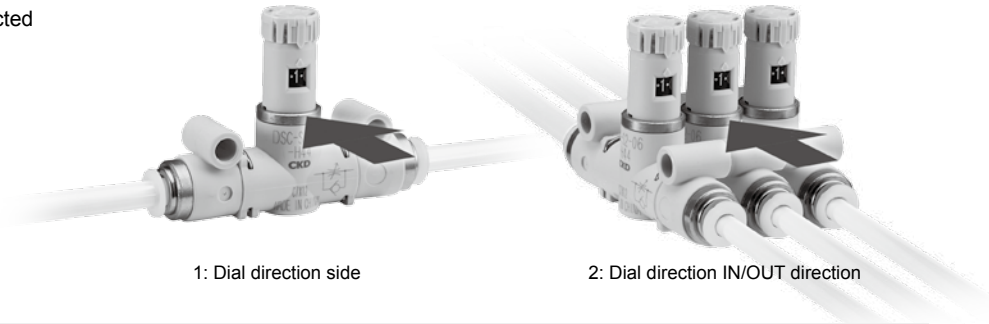

1: Dial direction side

2: Dial direction IN/OUT direction

Usage examples

Purge gas flow rate adjustment

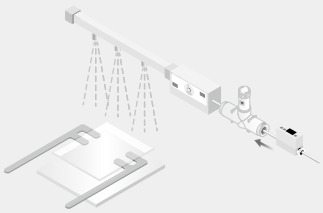

Vacuum burst flow rate adjustment using vacuum suction

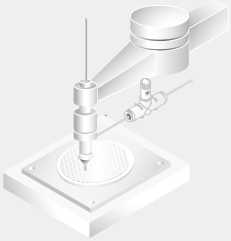

Driving cylinder

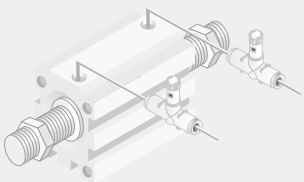

Air knife

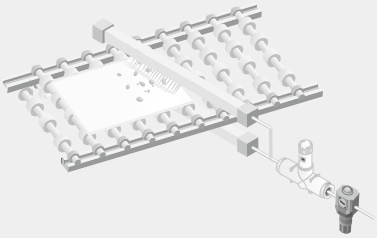

Compact

Industry's smallest size *

Use of a small dial allows installation on the speed controller cylinder without interfering with the ground surface of the cylinder. (PAT.)

* October 2015, CKD research.

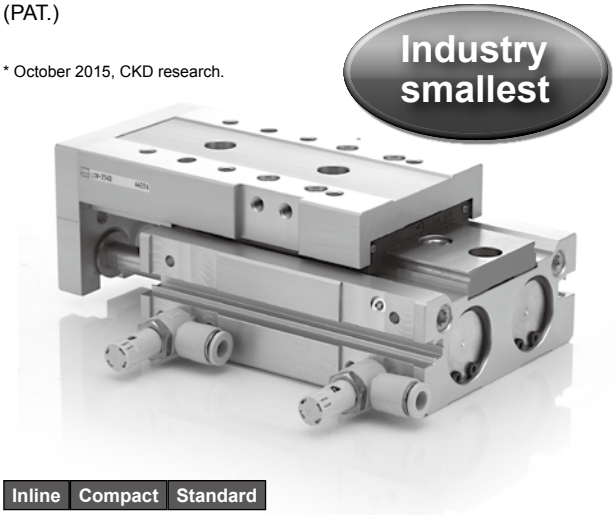

Inline Compact Standard

Flow characteristics in proportion to dial value (needle position)

Thanks to the optimal design of the needle, linear flow characteristics proportional to the dial value (needle position) are achieved and cylinder speed setting is made easy.
Flow rate barely varies and can be reset by simply setting the dial to the same value during replacement.
Job-hours can be significantly reduced and misalignments prevented.

[Flow characteristics]

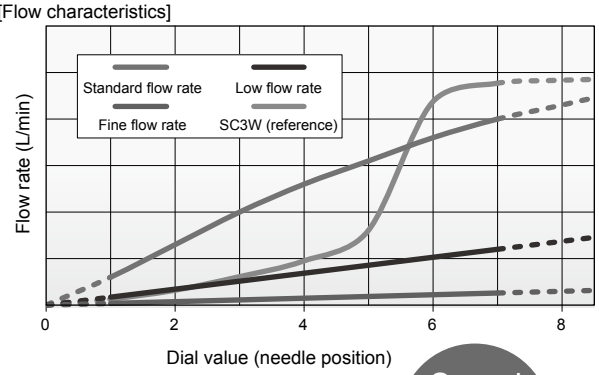

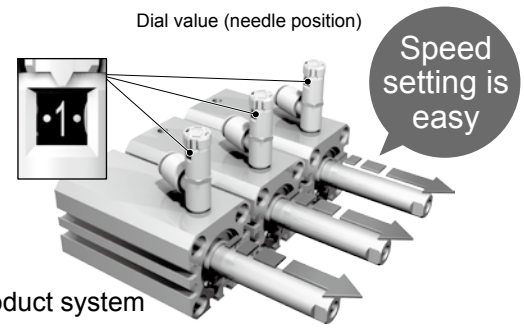

Inline Compact

Finer quantification is achieved

Indicator displays the number of dial rotations in increments of 0.5.
Finer quantification is now possible.

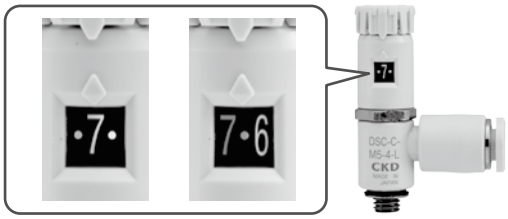

Operability has been improved

With "clicks" that can be felt with your fingertips, each 0.5 turn of the knob can now be confirmed even in situations where the dial display cannot be visually inspected.

Inline Compact Standard

Easy adjustment

Push locking method is used for fixing the needle.
Adjustment is easy with simple operation.

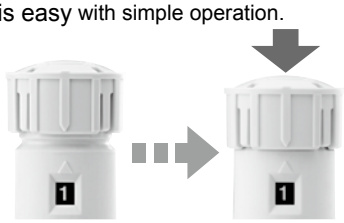

Knob features rotation position indicators

Easy management of cylinder speed values.

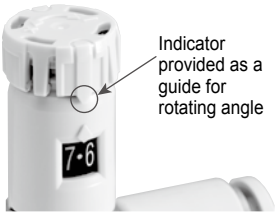

Speed of rotation can be checked from two surfaces

Dial display is visible from front and back.

Product system

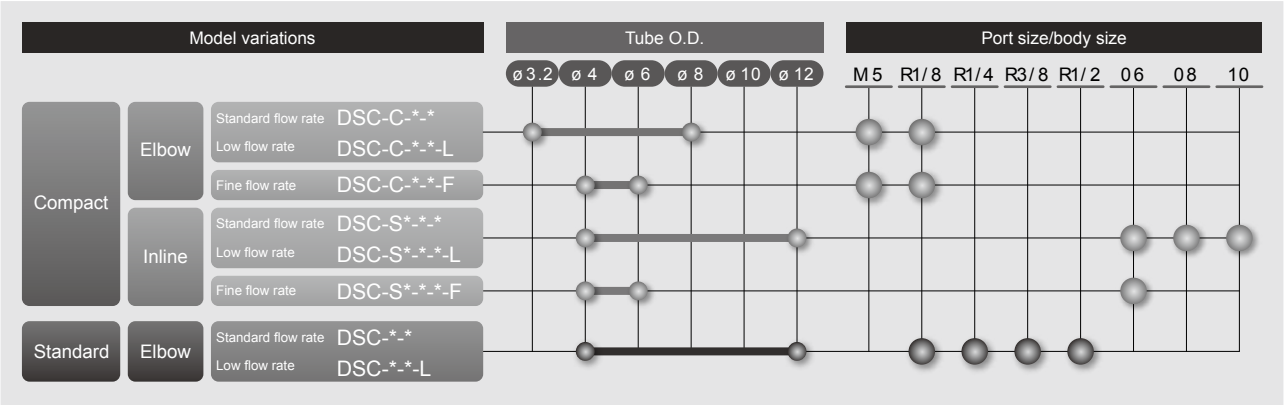

Speed controller with adjusting dial

DSC Series

● Port size: M5, R1/8 to R1/2

JIS symbol 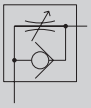 (Meter-out) 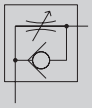 (Meter-in)

RoHS

Specifications

● Compact

Item			DSC-C-M5			DSC-C-6		
Compatible tube O.D.		mm	ø3.2	ø4	ø6	ø4	ø6	ø8
Port size			M5			R1/8		
Working fluid			Compressed air					
Max. working pressure		MPa	1.0 (≈150 psi, 10 bar)					
Min. working pressure		MPa	0.05 (≈7.3 psi, 0.5 bar)					
Proof pressure		MPa	1.5 (≈220 psi, 15 bar)					
Fluid temperature		°C	5 (41°F) to 60 (140°F) (no freezing. *2)					
Ambient temperature		°C	0 (32°F) to 60 (140°F) (no freezing)					
Needle control range			1 to 7 rotations					
Weight		g	10.5	11.5	12	22	23	24
Free flow	Flow rate	ℓ/min(ANR)	87	100		210	270	
	Eff. X-sectional area	mm^2	1.3	1.5		3.2	4	
Controlled flow (Standard flow rate)	Flow rate	ℓ/min(ANR)	60			160	200	
	Eff. X-sectional area	mm^2	0.9			2.4	3	
Controlled flow (Low flow rate)	Flow rate	ℓ/min(ANR)	20			60		
	Eff. X-sectional area	mm^2	0.3			0.9		
Controlled flow (fine flow rate)	Flow rate	ℓ/min(ANR)	-	6.7		13		-
	Eff. X-sectional area	mm^2	-	0.1		0.2		-

● Standard

Item			DSC-6			DSC-8			DSC-10				DSC-15	
Compatible tube O.D.		mm	ø4	ø6	ø8	ø6	ø8	ø10	ø6	ø8	ø10	ø12	ø10	ø12
Port size			R1/8			R1/4			R3/8				R1/2	
Working fluid			Compressed air											
Max. working pressure		MPa	1.0 (≈150 psi, 10 bar)											
Min. working pressure		MPa	0.05 (≈7.3 psi, 0.5 bar)											
Proof pressure		MPa	1.5 (≈220 psi, 15 bar)											
Fluid temperature		°C	5 (41°F) to 60 (140°F) (no freezing. *2)											
Ambient temperature		°C	0 (32°F) to 60 (140°F) (no freezing)											
Needle control range			1 to 10 rotations											
Weight		g	33	34	35	45	46	48	60	61	64	65	95	97
Free flow	Flow rate	ℓ/min(ANR)	210	270		470	530		670	1000	1070		1470	1600
	Eff. X-sectional area	mm^2	3.2	4		7	8		10	15	16		22	24
Controlled flow (Standard flow rate)	Flow rate	ℓ/min(ANR)	160	200		320	400		400	700	800		1120	1200
	Eff. X-sectional area	mm^2	2.4	3		5	6		6	10.5	12		17	17.5
Controlled flow (Low flow rate)	Flow rate	ℓ/min(ANR)	60			130			270				400	
	Eff. X-sectional area	mm^2	0.9			2			4				6	

*1: Flow rate is the atmospheric pressure conversion value at pressure 0.5 MPa.
*2: Freezing may occur due to adiabatic expansion depending on the air quality (dew point).

Specifications for rechargeable battery

● Structure suitable for use in general assembly during the rechargeable battery manufacturing process.

DSC - ····· - P4

Clean-room specifications

● Anti-dust generation structure for use in clean rooms.

DSC - ····· - P70

How to order

DSC -C - 6 - 6 - I L

- Ⓐ Product size
- Ⓑ Port size
- Ⓒ Compatible tube O.D.
- Ⓓ Control method
- Ⓔ Flow rate

Code	Description
Ⓐ Product size	
Blank	Standard
-C	Compact
Ⓑ Port size	
M5	M5
6	R1/8
8	R1/4
10	R3/8
15	R1/2
Ⓒ Compatible tube O.D.	
3	ø3.2
4	ø4
6	ø6
8	ø8
10	ø10
12	ø12
Ⓓ Control method	
Blank	Meter-out
I	Meter-in (Push ring color: black)
Ⓔ Flow rate	
Blank	Standard flow rate
L	Low flow rate
F	Fine flow rate (compact only)

Port size - compatible tube O.D. - flow rate combination

Ⓐ Product size	Compact		Standard			
Ⓑ Port size	**M5**	**R1/8**	**R1/8**	**R1/4**	**R3/8**	**R1/2**
ø3.2	○					
ø4	◎	◎	○			
ø6	◎	◎	○	○	○	
ø8		○	○	○	○	
ø10				○	○	○
ø12					○	○

○: Flow rate “F” (fine flow rate) cannot be selected
◎: Flow rate “F” (fine flow rate) can be selected

LCM
LCR
LCG
LCW
LCX
STM
STG
STS/STL
STR2
UCA2
ULK*
JSK/M2
JSG
JSC3/JSC4
USSD
UFCD
USC
UB
JSB3
LMB
LML
HCM
HCA
LBC
CAC4
UCAC2
CAC-N
UCAC-N
RCS2
RCC2
PCC
SHC
MCP
GLC
MFC
BBS
RRC
GRC
RV3*
NHS
HRL
LN
Hand
Chuk
MecHnd/Chuk
ShkAbs
FJ
FK
SpdContr
Ending

Flow characteristics

● Compact

●DSC-C-M5-*

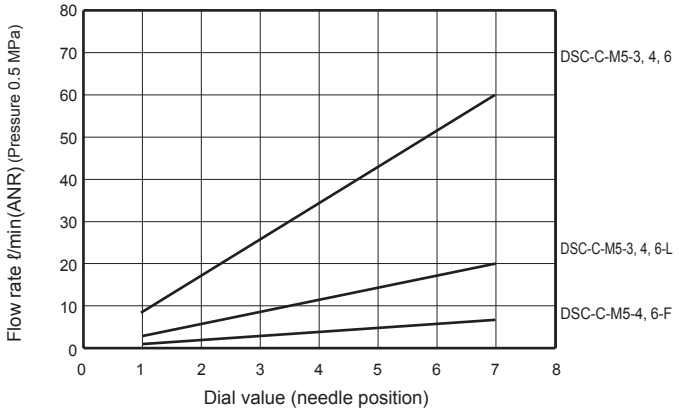

●DSC-C-6-*

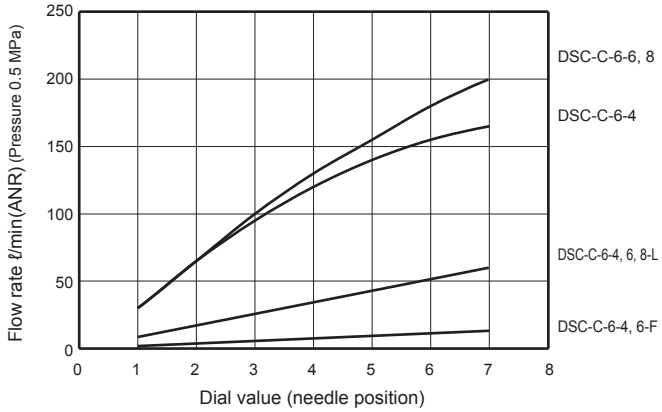

● Standard

●DSC-6-*

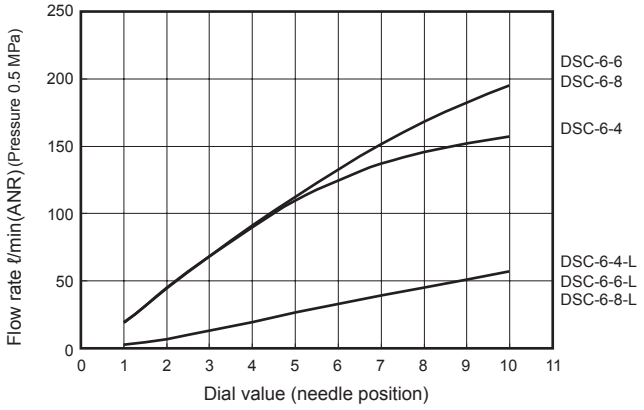

●DSC-8-*

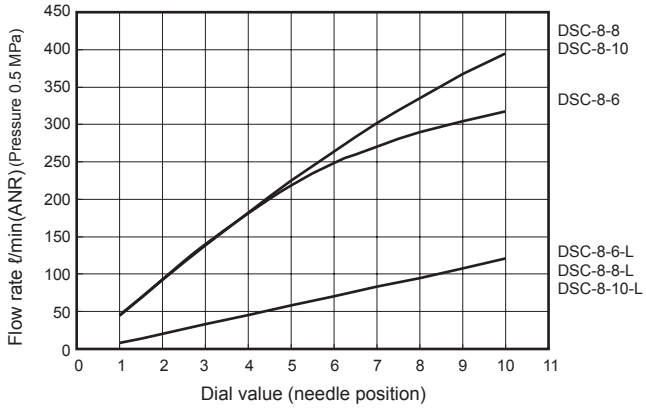

●DSC-10-*

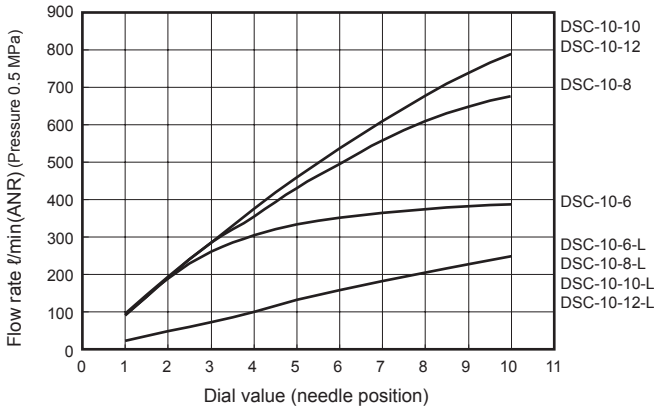

●DSC-15-*

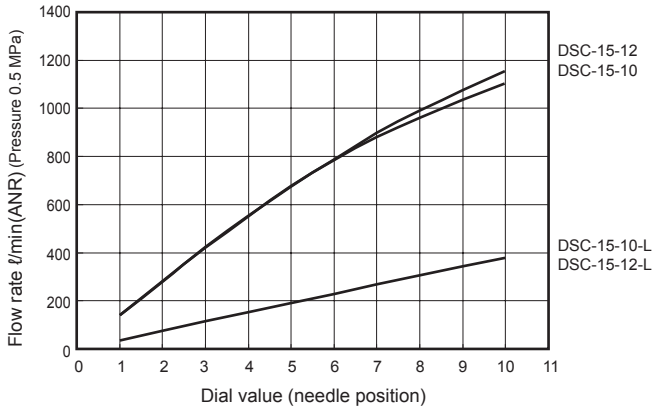

Note: The flow characteristics may differ depending on the piping conditions around the unit and the temperature change.

Internal structure and parts list

● Compact

●DSC-C-M5-4, 6

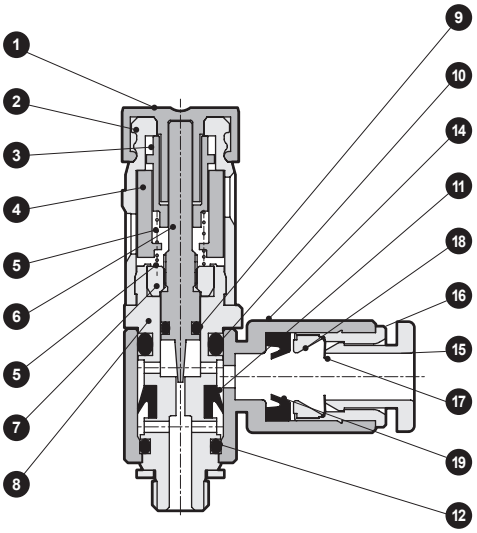

●DSC-C-M5-3

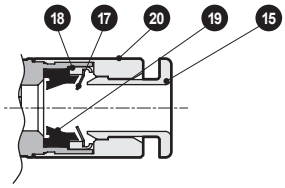

●DSC-C-6-*

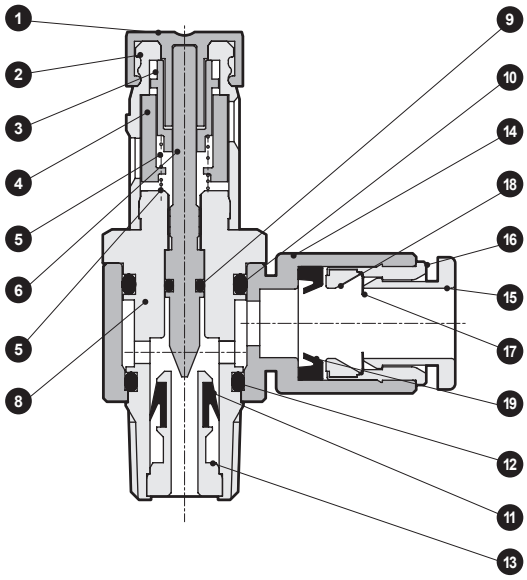

No.	Part name	Material	No.	Part name	Material
1	Knob	Polyacetal	11	Packing	Hydrogenated nitrile rubber
2	Gear cover	Polybutylene terephthalate	12	O-ring	Nitrile rubber
3	Slide gear	Polybutylene terephthalate	13	Check part	Copper alloy
4	Indication ring	Polybutylene terephthalate	14	Rotor	Polybutylene terephthalate
5	Spring	Stainless steel	15	Push ring	Polybutylene terephthalate
6	Needle	Stainless steel	16	Outer ring	Copper alloy
7	Gland nut	Copper alloy	17	Chuck	Stainless steel
8	Rotary shaft	Copper alloy	18	Chuck holder	Polyether sulfone (Copper alloy) *1
9	O-ring	Nitrile rubber	19	Packing	Nitrile rubber
10	O-ring	Nitrile rubber	20	Fitting body	Copper alloy

*1: Values shown in ( ) are when DSC-C-M5-3 is selected
*2: All the copper alloy parts have electroless nickel plating.

● Standard

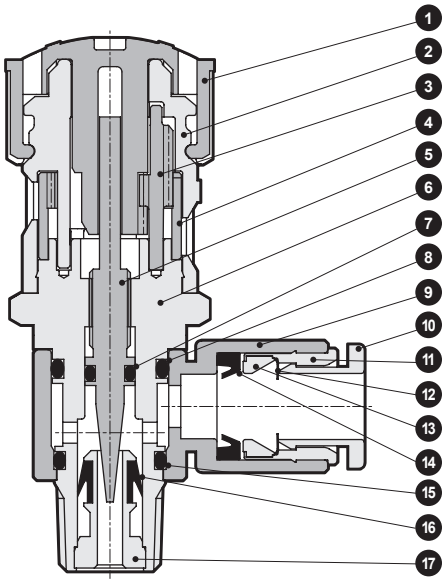

No.	Part name	Material
1	Knob	Polyacetal
2	Gear cover	Polybutylene terephthalate
3	Gear	Stainless steel
4	Indication ring	Polyacetal
5	Needle	Stainless steel
6	Rotary shaft	Copper alloy
7	O-ring	Nitrile rubber
8	O-ring	Nitrile rubber
9	Rotor	Polybutylene terephthalate
10	Push ring	Polybutylene terephthalate
11	Outer ring	Copper alloy
12	Chuck	Stainless steel
13	Chuck holder	Polyether sulfone
14	Packing	Nitrile rubber
15	O-ring	Nitrile rubber
16	Packing	Hydrogenated nitrile rubber
17	Check part	Copper alloy

*1: All the copper alloy parts have electroless nickel plating.

LCM
LCR
LCG
LCW
LCX
STM
STG
STS/STL
STR2
UCA2
ULK*
JSK/M2
JSG
JSC3/JSC4
USSD
UFCD
USC
UB
JSB3
LMB
LML
HCM
HCA
LBC
CAC4
UCAC2
CAC-N
UCAC-N
RCS2
RCC2
PCC
SHC
MCP
GLC
MFC
BBS
RRC
GRC
RV3*
NHS
HRL
LN
Hand
Chuk
MecHnd/Chuk
ShkAbs
FJ
FK
SpdContr
Ending

Dimensions

● Compact

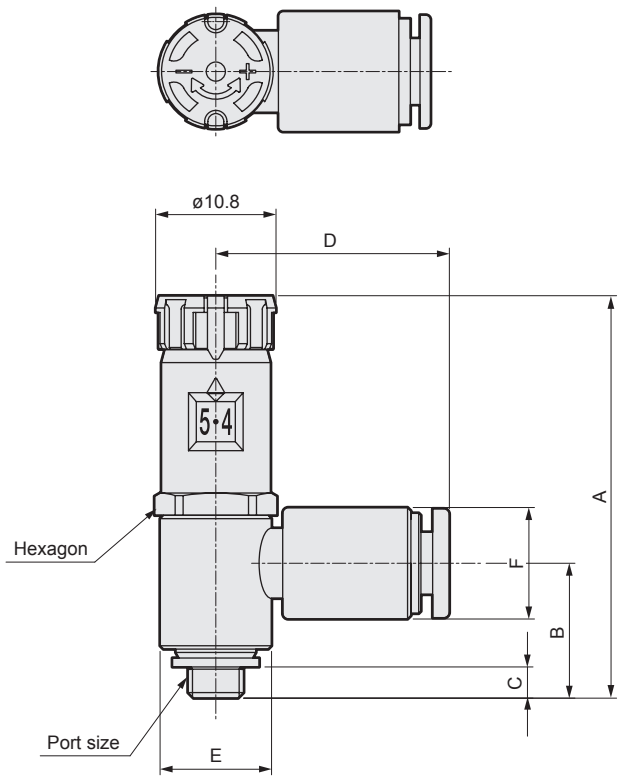

● Standard

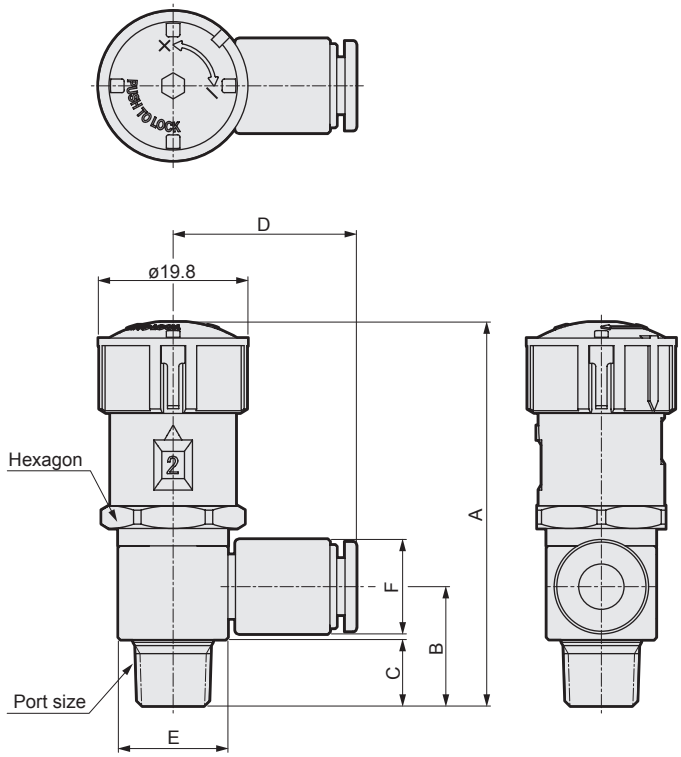

Model No.	Product size	Port size	Compatible tube O.D.	A When locked	A At adjustment	B	C	D	E	F	Hexagon
DSC-C-M5-3	Compact type	M5×0.8	ø3.2	36	37.5	11.9	3	16.5	10	7.5	10
DSC-C-M5-4			ø4			11.9		21		10	
DSC-C-M5-6			ø6			11.7		22.5		12.5	
DSC-C-6-4		R1/8	ø4	41.9	43.4	16.2	8.7	23.5	14.5	10	13
DSC-C-6-6			ø6			15.7		24.5		12.5	
DSC-C-6-8			ø8			15.4		26		14.5	
DSC-6-4	Standard type	R1/8	ø4	51	54	16.2	8.7	23.5	14.5	10	17
DSC-6-6			ø6			15.7		24.5		12.5	
DSC-6-8			ø8			15.4		26		14.5	
DSC-8-6		R1/4	ø6	55.5	58.5	20	11.7	26	18	12.5	17
DSC-8-8			ø8			19		27.5		14.5	
DSC-8-10			ø10			19		30.5		17.5	
DSC-10-6		R3/8	ø6	58	61	23.1	12.7	28.5	22.5	12.5	19
DSC-10-8			ø8			21.3		30		14.5	
DSC-10-10			ø10			21.8		32		17.5	
DSC-10-12			ø12			21.7		33.5		20	
DSC-15-10		R1/2	ø10	63	66	25.2	15.7	34.5	27.5	17.5	24
DSC-15-12			ø12			25.7		36		20	

MEMO

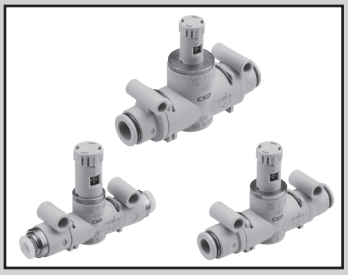

Inline speed controller with adjusting dial

DSC-S Series

● Port size: ø4, ø6, ø8, ø10, ø12

JIS symbol

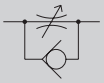

RoHS

Specifications

1 MPa ≈ 145.0 psi, 1 MPa = 10 bar

Item			DSC-S□-06		DSC-S□-08		DSC-S□-10		
Compatible tube O.D.		mm	ø4	ø6	ø6	ø8	ø8	ø10	ø12
Working fluid			Compressed air						
Max. working pressure		MPa	1.0 (≈145 psi, 10 bar)						
Min. working pressure		MPa	0.1 (≈15 psi, 1 bar)						
Proof pressure		MPa	1.5 (≈217 psi, 15 bar)						
Fluid temperature		°C	5 (41°F) to 60 (140°F) (no freezing. *2)						
Ambient temperature		°C	0 (32°F) to 60 (140°F) (no freezing)						
Needle control range			1 to 7 rotations						
Weight		g	24	18	30	31	52	57	60
Free flow	Flow rate	L/min (ANR)	170	300	400	550	900	1100	1200
	Effective cross-sectional area	mm^2	2.5	4.5	6	8	13.5	16.5	18
Controlled flow (Standard flow rate)	Flow rate	L/min (ANR)	160	200	360	400	710	780	780
	Effective cross-sectional area	mm^2	2.4	3	5	6	10.5	12	12
Controlled flow (Low flow rate)	Flow rate	L/min (ANR)	60		130		270		
	Effective cross-sectional area	mm^2	0.9	0.9	2	2	4	4	4
Controlled flow (fine flow rate)	Flow rate	L/min (ANR)	13		–	–	–	–	–
	Effective cross-sectional area	mm^2	0.2	0.2	–	–	–	–	–

*1: Flow rate is the atmospheric pressure conversion at 0.5 MPa.
*2: Freezing may occur due to adiabatic expansion depending on the air quality (dew point).

How to order

DSC –S 1 - 06 - H66 - L

Ⓐ Product
Ⓑ Dial direction
Ⓒ Body size
Ⓓ Compatible tube O.D.
Ⓔ Flow rate

Code	Item
Ⓐ Product	
–S	Inline
Ⓑ Dial direction	
1	Side
2	IN/OUT direction
Ⓒ Body size	
06	1/8 thread equivalent
08	1/4 thread equivalent
10	3/8 thread equivalent
Ⓓ Compatible tube O.D.	
H44	ø4
H66	ø6
H88	ø8
H1010	ø10
H1212	ø12
Ⓔ Flow rate	
Blank	Standard flow rate
L	Low flow rate
F	Fine flow rate

Combination of body, compatible tube O.D., and flow rate

	Ⓒ Body size						
	06		08		10		
Ⓓ Compatible tube O.D. / Ⓔ Flow rate	H44	H66	H66	H88	H88	H1010	H1212
Blank	●	●	●	●	●	●	●
L	●	●	●	●	●	●	●
F	●	●					

Flow characteristics

●DSC-S□-06-*

Standard flow rate, low flow rate, fine flow rate

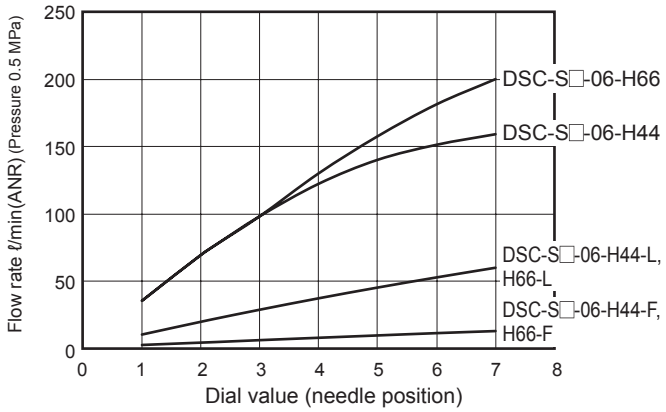

●DSC-S□-08-*

Standard flow rate, low flow rate

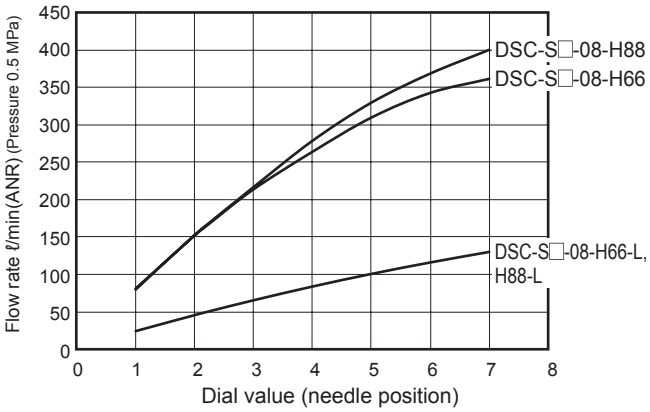

●DSC-S□-10-*

Standard flow rate, low flow rate

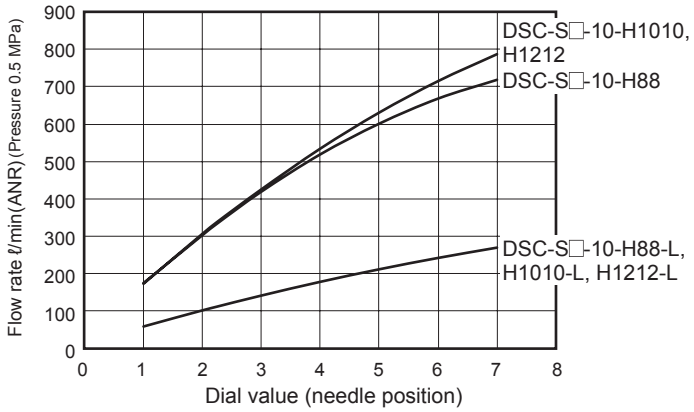

LCM
LCR
LCG
LCW
LCX
STM
STG
STS/STL
STR2
UCA2
ULK*
JSK/M2
JSG
JSC3/JSC4
USSD
UFCD
USC
UB
JSB3
LMB
LML
HCM
HCA
LBC
CAC4
UCAC2
CAC-N
UCAC-N
RCS2
RCC2
PCC
SHC
MCP
GLC
MFC
BBS
RRC
GRC
RV3*
NHS
HRL
LN
Hand
Chuk
MecHnd/Chuk
ShkAbs
FJ
FK
SpdContr
Ending

Internal structure and parts list

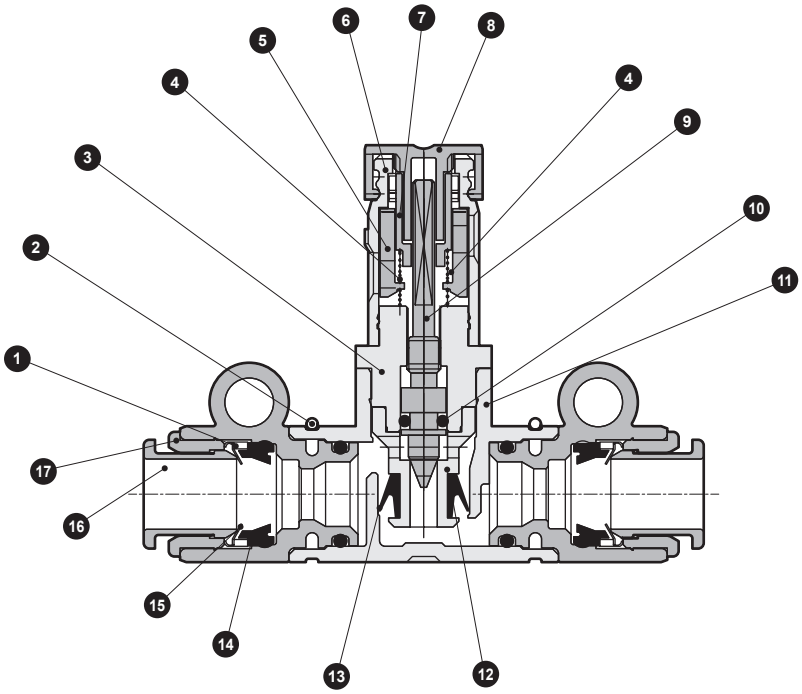

No.	Part name	Material
1	Holder	Copper alloy or Polyether sulfone
2	Stopper ring	Stainless steel
3	Needle guide	Copper alloy
4	Spring	Stainless steel
5	Indication ring	Polybutylene terephthalate
6	Gear cover	Polybutylene terephthalate
7	Slide gear	Polybutylene terephthalate
8	Knob	Polyacetal
9	Needle	Stainless steel
10	O-ring	Nitrile rubber
11	Body	Polybutylene terephthalate
12	Chuck bracket	Copper alloy
13	Check packing	Hydrogenated nitrile rubber
14	Packing	Nitrile rubber
15	Chuck	Stainless steel
16	Push ring	Polybutylene terephthalate
17	Outer ring	Copper alloy

*1: All the copper alloy parts have electroless nickel plating.

Dimensions

●Dial direction; side (S1)

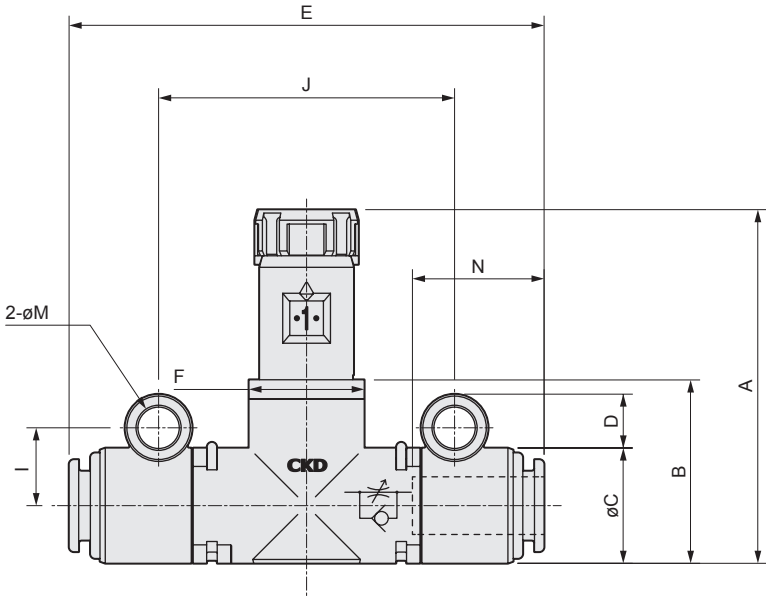

●Mounting pitch dimension for manifold

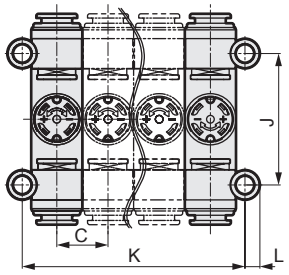

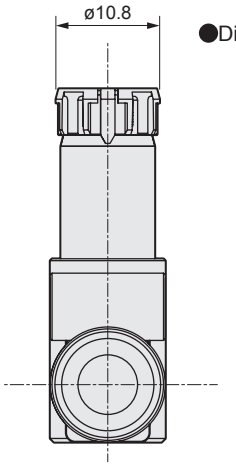

●Dial direction; IN/OUT direction (S2)

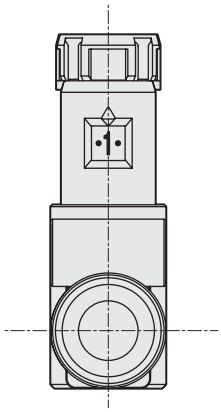

Model No.	Connection tube O.D	A When locked	A During adjustment	B	C	D	E	F	I	J	K	L	M (Mounting hole diameter)	N (tube insert length)
DSC-S□-06-H44	ø4	36.8	38.3	19.1	12	5.6	54.6	12	8.1	30.8	12 x n+4.2	3.5	4.3	12.9
DSC-S□-06-H66	ø6						49.4							13.7
DSC-S□-08-H66	ø6	41.9	43.4	24.2	15	5.6	63.1	15	9.5	40.8	15 x n+4	3.6		18
DSC-S□-08-H88	ø8						66.3							19
DSC-S□-10-H88	ø8	48.4	49.9	30.7	20	5.1	70.8	19.4	11.5	47	20 x n+3			19
DSC-S□-10-H1010	ø10						75.4							21
DSC-S□-10-H1212	ø12						79.6				20.4 x n+3			22

Pneumatic components (speed controller)

Pneumatic components Warnings/cautions

Be sure to read this section before use.
Refer to “Pneumatic, Vacuum and Auxiliary Components (No. CB-024SA)” for general precautions for pneumatic components.

Product-specific cautions: Speed controller with dial

Design/selection

WARNING

- Do not constantly push down or apply load onto the push ring for the push-in fitting.
  - The tube may lose its holding capacity.
  - When transporting an assembled product, avoid positions where the push ring is constantly pushed down.

CAUTION

- This valve cannot be used as a stop valve that requires zero leakage.
  Slight leakage is allowed for in this product’s specifications.

- Note that the flow rate may differ from the values on pages 1970 and 1975 depending on the piping conditions around the unit and the temperature changes.

- Do not use this valve in circuits where ozone is generated intentionally.
  Ozone resistance is sufficient for naturally occurring ambient ozone. Packing deteriorates if ozone levels are high.

- This product is used for compressed air. Do not use with other fluids.

- Use the product in the range of conditions specified for the product.
  Contact CKD when using the product outside specifications or for special applications.
  - Use of the product outside the specifications range may result in insufficient performance, and its safety cannot be guaranteed.
  - This product may not be usable in special applications and environments.
    For example, use in applications requiring safety, including nuclear energy, railways, aircraft, vehicles, medical devices, devices in contact with beverages or foodstuffs, amusement devices, emergency cutoff circuits, press machines, brake circuits, or safety devices or applications.

- Confirm before use that the product will withstand the working environment.
  - This product cannot be used in environments where functional obstacles could occur.
    Such environments include high temperatures, chemical atmospheres, or where chemical liquids, vibration, moisture, water dripping or gas is present.
    Environments where ozone is generated.
  - Do not use the product in a place where it could come in direct contact with coolant, spatter, etc.

- Understand the characteristics of compressed air before designing a pneumatic circuit.
  - The same functions as mechanical, hydraulic and electrical methods cannot be anticipated if instantaneous stopping and holding are required during an emergency stop.
  - Pop-out, air discharge, or leakage due to air compression and expansion may occur.

- Install a “pressure switch” and “residual pressure exhaust valve” on the device’s compressed air supply side.
  - The pressure switch will disable operation until the set pressure is reached. The residual pressure exhaust valve releases compressed air into the pneumatic pressure circuit to prevent accidents caused by operation of pneumatic components under residual pressure.

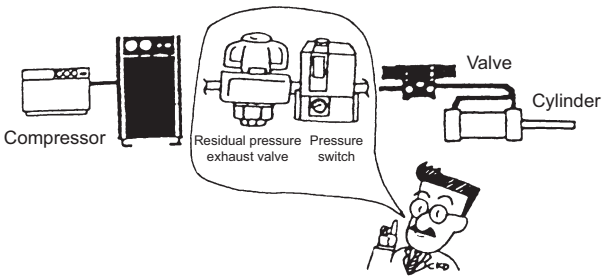

- Confirm whether PTFE can be used.
  The sealant contains PTFE (polytetrafluoroethylene resin) powder. Check that this poses no problems during use.

- Indicate the maintenance conditions in the device’s instruction manual.
  - The product’s performance may drop too low to maintain an appropriate safety level depending on usage conditions, working environment and maintenance status. With correct maintenance, the product functions can be used to the fullest.

- Consult with CKD if ozone is generated in the supplied air.

- Rubber parts will deteriorate, shortening product life, if ultra dry air is used.

Mounting, installation and adjustment

⚠ CAUTION

- The needle lock is released when the knob is pulled, and locked when it is pushed.

- To adjust the flow rate, turn the knob to the right to close or the left to open.

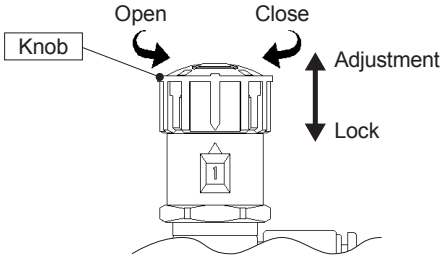

  - When opened by rotating the knob on the left hand side, the rotary direction of the dial display is clockwise for standard and counterclockwise for compact.

- Do not rotate the knob too fast.
  - This may result in a distorted dial display or malfunctions.

- Do not apply rotation torque to the dial display.
  - This may result in distorted flow characteristics or malfunctions.

- After adjustment, push the knob to lock the needle.

- Controllable range of the needle is from 1 to 7 or 1 to 10 turns; operate with a maximum of 0.05 N·m torque.
  Turning the knob beyond the range forcibly may result in distorted flow characteristics or malfunctions.

- Even when the needle is fully closed, the dial display is not 0.
  Calibration of the dial indicator flow rate is performed when the needle is not fully closed. Note that 0 is not necessarily indicated when the needle is fully closed. Beyond “0”, “-” is displayed.

- Rotate the mounting hole section in the non-pressurized state.

- When mounting on a panel, the stopper ring will interfere with the panel, so insert a flat washer between the mounting hole and panel. (DSC-S)

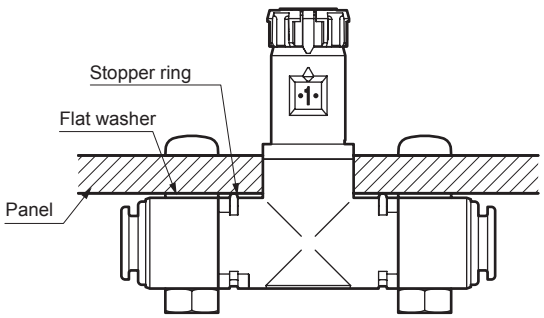

- Tighten bolts in mounting holes using a torque of 0.8 N·m or less.

- As tubing may be dislocated due to product oscillation or torsion, fix the product with bolts or Insulok ties, etc., when piping.

- Fully close the needle, and then open to adjust speed.
  - Adjusting with the needle open could cause the actuator to pop out, which is dangerous. Ensure that it is closed and then open it.
  - The needle closes when turned to the right and opens when turned to the left.

- Check the flow direction with the JIS symbol.
  If installed in reverse, speed adjustment will not function and the actuator could pop out suddenly, creating a hazard.

- Confirm the final speed for each usage.
  Confirm the final speed after each usage as the variability between products, actuators, conditions of use and ambient temperatures will cause deviations.

- Install a pneumatic filter before the circuit.
  Flow rate will fluctuate due to clogging and foreign matter in the orifice.

- Use the specified tightening torque (Table 1-(1)) when connecting pipes. To additionally tighten to adjust the position of the rotation indicator window, use the torque in (Table 1-(2)).
  Do not hold the knob when piping. Doing so may cause failures. Note that the port size M5 cannot be aligned by additional tightening.

Thread size	(1) Piping (N·m)	(2) Additional tightening (N·m)
M5	1.0 to 1.5	–
R1/8	3 to 5	9 or less
R1/4	6 to 8	14 or less
R3/8	13 to 15	24 or less
R1/2	16 to 18	30 or less

Tightening torque of port thread (Table 1)

- Securely insert the tube until it contacts the fitting tube end and check that it does not come off the fitting.

- Do not remove the package or seal cap on the piping port until just before piping the product.
  - Removing the piping port cap before piping work may cause foreign matter to enter the pneumatic components from the piping port, resulting in failure or malfunction.

- When connecting pipes, wrap sealant tape in the opposite direction from the threading, from the inside position to within 2 mm from the pipe end.

- If sealant tape protrudes from the pipe threads, it could be cut when screwing the bolts in. This could cause the tape to enter the valve, causing failures.

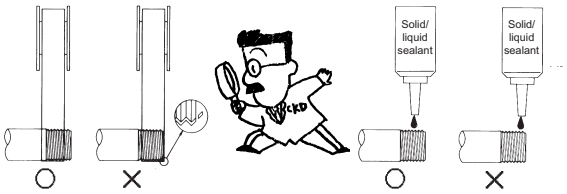

■ Handling push-in fittings and tubes

- For handling push-in fittings and tubes, refer to the warnings and cautions for fittings and tubes in "Pneumatic/Vacuum/Auxiliary Components (No. CB-024SA)".

■ Always flush just before piping pneumatic components.

- Any foreign matter that has entered during piping must not enter the pneumatic components.

■ When supplying compressed air after connecting pipes, do not suddenly apply high pressure.

- The pipe connection could dislocate, causing the pipe to fly off, leading to accidents.

■ Before supplying compressed air upon connecting pipes, be sure to check for air leaks at the pipe connections.

- Apply a leakage detection agent to pipe connections with a brush and check for air leaks.

■ Connect the piping so that connections are not dislocated by equipment movement, vibration, tension, etc.

- Control of actuator speed will be disabled if piping on the exhaust side of the pneumatic circuit is disengaged.
- When using a chuck holding mechanism, the chuck may be released, creating a hazardous state.

■ Around the pneumatic components, keep space for mounting, removal and piping work.

■ Install a pneumatic filter just before the pneumatic component in the circuit.

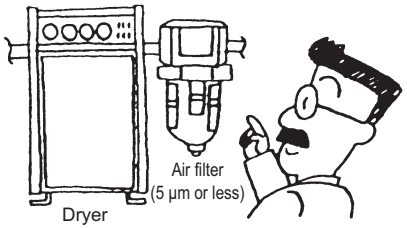

■ Avoid using the product for applications that involve rotation or oscillation.

- Fittings could be damaged.

■ Do not apply lateral load to the body during or after installation.

■ Avoid use in areas with large vibration or impact.

Use/maintenance

⚠ WARNING

■ Before maintenance, stop the air flow and confirm that no pressure remains.

LCM
LCR
LCG
LCW
LCX
STM
STG
STS/STL
STR2
UCA2
ULK*
JSK/M2
JSG
JSC3/JSC4
USSD
UFCD
USC
UB
JSB3
LMB
LML
HCM
HCA
LBC
CAC4
UCAC2
CAC-N
UCAC-N
RCS2
RCC2
PCC
SHC
MCP
GLC
MFC
BBS
RRC
GRC
RV3*
NHS
HRL
LN
Hand
Chuk
MecHnd/Chuk
ShkAbs
FJ
FK
SpdContr
Ending

Visualizing flow rate adjustment and control

The needle valve with dial DVL-S and DVL-N uses a needle valve with linear flow characteristics, and numerically displays the needle position with the number of rotations of the dial.
Anyone can easily adjust cylinder speed and flow rate accurately and with good reproducibility using this needle valve.

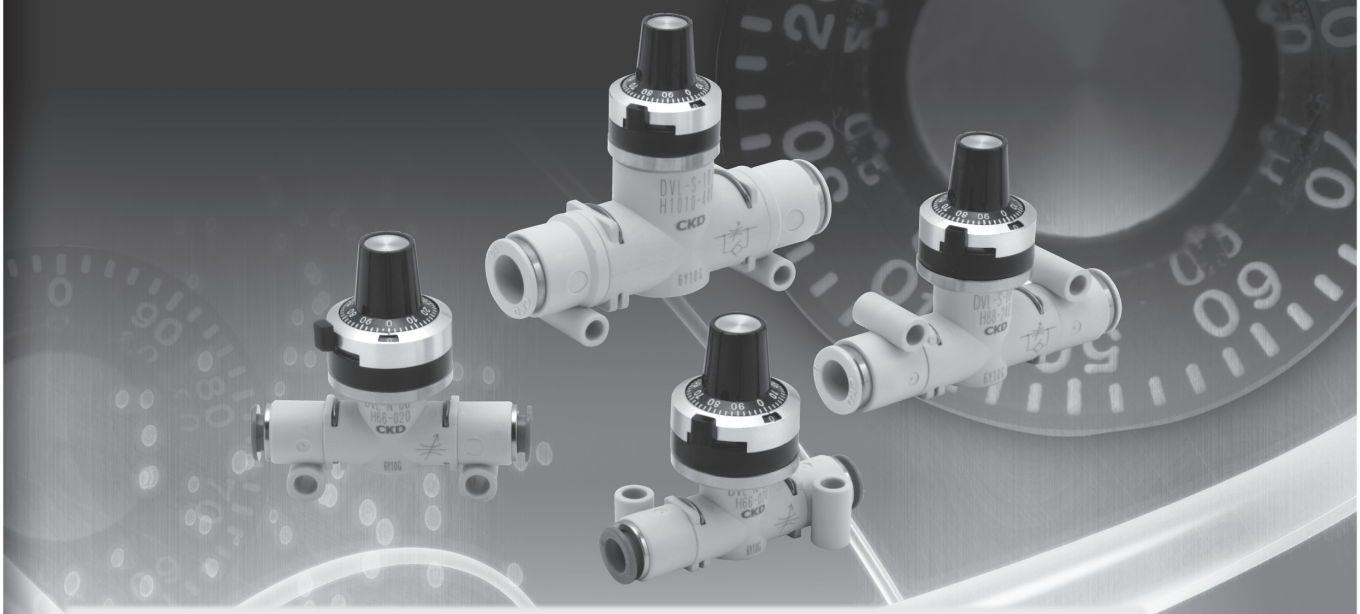

Use as a speed controller

The standard type has a built-in check valve, and can be used as a speed adjustment valve or vacuum break valve for pneumatic cylinders.

Oil-prohibited specifications available

These specifications enable use in environments susceptible to oil, in clean rooms, and in vacuum applications.

- Adjustment of ionizer purge gas flow rate
- Adjustment of vacuum break flow rate in vacuum pickup processes
- Cylinder drive
- Air knife
- Transfer of LCD substrates (non-contact)

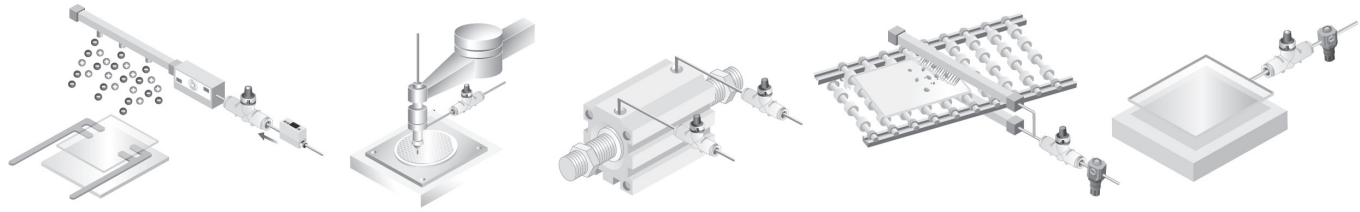

DVL Series

Industry's first needle valve with dial

Linear flow characteristics

Linear flow characteristics in proportion to the needle position

Displays the needle position via dial rotations

The needle position is numerically displayed with the dial.

Example of flow characteristics

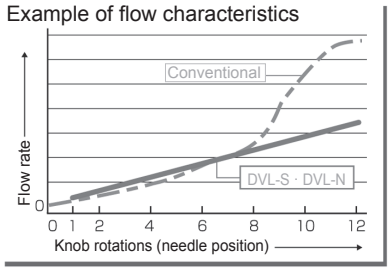

Visual control of flow rates

The flow rate is controlled easily and visually with the dial display.
Work manuals are now quantifiable.

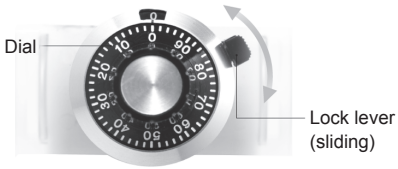

Prevent adjustment errors

Anyone can easily and accurately adjust values.
High reproducibility prevents adjustment errors.

Easy locking

The needle is fixed with the sliding lock lever, making adjustment work even easier.

Reduce man-hours

Adjustment work is done quickly, greatly reducing the number of man-hours for setup.

Unrestricted installation

The installation section rotates 360°, enabling mounting and installation to be selected freely from the base, side, or panel mounting. No mounting bracket is needed.

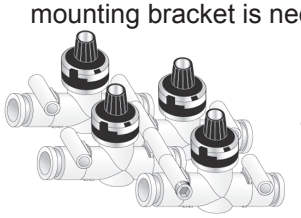

Example of manifold

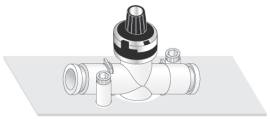

Example of base mounting

Example of panel mounting

Sealants have outstanding ozone resistance (oil-prohibition type).
RoHS Directive-compliant

Example of usage circuit

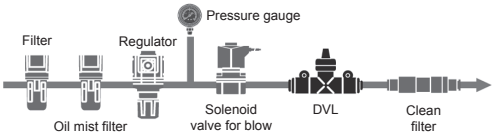

DVL Series Product

Model variations	Applicable tube O.D.	Flow rate range 20	80	160	240	400	Application
Check valve Standard type **DVL-S**	ø4	●	●				Control actuator speed
	ø6	●	●	●	●		Adjust vacuum break flow rate for small electronic parts
	ø8				●	●	Control pressing pressure and tension
	ø10					●	
	ø12					●	
Needle valve Oil-prohibited type **DVL-N**	ø4	●	●				Compatible with clean environments and vacuum fields
	ø6	●	●	●	●		Adjust floating conveying flow rate
	ø8				●	●	Control ionizer purge gas flow rate
	ø10					●	Blow workpieces with air
	ø12					●	

Needle valve with adjusting dial, check valve

DVL-S Series

Needle valve with adjusting dial, needle valve/oil-prohibited

DVL-N Series

● Port size: ø4, ø6, ø8, ø10, ø12

JIS symbol

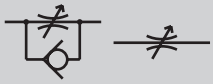

DVL-S DVL-N

RoHS CAD

Specifications

● Needle valve with adjusting dial, check valve DVL-S

Item		DVL-S-06					DVL-S-08		DVL-S-10		
		020		080		160	240		400		
Compatible tube O.D.	mm	ø4	ø6	ø4	ø6	ø6	ø6	ø8	ø8	ø10	ø12
Working fluid		Compressed air									
Max. working pressure	MPa	1.0 (≈150 psi, 10 bar)									
Min. working pressure	MPa	0.1 (≈15 psi, 1 bar) (*3)									
Proof pressure	MPa	1.5 (≈220 psi, 15 bar)									
Fluid temperature	°C	5 (41°F) to 60 (140°F) (no freezing. *2)									
Ambient temperature	°C	0 (32°F) to 60 (140°F) (no freezing)									
Weight	g	54	48	54	48	48	60	61	82	86	88
Needle control range		1 to 12 rotations					1 to 13 rotations				
Free flow	Flow rate ℓ/min(ANR)	170	300	170	300	300	400	550	900	1100	1200
	Eff. X-sectional area mm^2	2.5	4.5	2.5	4.5	4.5	6	8	13.5	16.5	18
Controlled flow	Flow rate ℓ/min(ANR)	18		80		160	240		440		
	Eff. X-sectional area mm^2	0.25		1.2		2.4	3.6		6.6		

*1: Flow rate is the atmospheric pressure conversion at 0.5 MPa.
*2: Freezing may occur due to adiabatic expansion depending on the air quality (dew point).
*3: Evacuating up to -100 kPa is possible only in the direction of free flow. (Needle control is not available)

● Needle valve with adjusting dial, needle valve/oil-prohibited DVL-N

Item	DVL-N-06					DVL-N-08		DVL-N-10		
	020		080		160	240		400		
Compatible tube O.D. mm	ø4	ø6	ø4	ø6	ø6	ø6	ø8	ø8	ø10	ø12
Working fluid	Compressed air/N2 gas/low vacuum									
Max. working pressure MPa	0.7 (≈100 psi, 7 bar)									
Negative pressure kPa	-100 (≈-15 psi, -1 bar)									
Proof pressure MPa	1.5 (≈220 psi, 15 bar)									
Fluid temperature °C	5 (41°F) to 60 (140°F) (no freezing. *2)									
Ambient temperature °C	0 (32°F) to 60 (140°F) (no freezing)									
Weight g	54	48	54	48	48	60	61	82	86	88
Needle control range	1 to 12 rotations					1 to 13 rotations				
Flow rate ℓ/min(ANR)	18		80		160	240		440		
Effective cross-sectional area mm^2	0.25		1.2		2.4	3.6		6.6		

*1: Flow rate is the atmospheric pressure conversion at 0.5 MPa.
*2: Freezing may occur due to adiabatic expansion depending on the air quality (dew point).

LCM
LCR
LCG
LCW
LCX
STM
STG
STS/STL
STR2
UCA2
ULK*
JSK/M2
JSG
JSC3/JSC4
USSD
UFCD
USC
UB
JSB3
LMB
LML
HCM
HCA
LBC
CAC4
UCAC2
CAC-N
UCAC-N
RCS2
RCC2
PCC
SHC
MCP
GLC
MFC
BBS
RRC
GRC
RV3*
NHS
HRL
LN
Hand
Chuk
MecHnd/Chuk
ShkAbs
FJ
FK
SpdContr
Ending

How to order

DVL - S - 06 - H66 - 020

- DVL: Model No.
- S: Ⓐ Control method
- 06: Ⓑ Body size
- H66: Ⓒ Compatible tube O.D.
- 020: Ⓓ Flow rate

Refer to the table below for the body size, compatible tube O.D. and flow rate combination.

Code	Description
Ⓐ Control method (oil removal)	
S	Check valve
N	Needle valve (oil-prohibited)
Ⓑ Body size	
06	1/8 thread equivalent
08	1/4 thread equivalent
10	3/8 thread equivalent
Ⓒ Compatible tube O.D.	
H44	ø4
H66	ø6
H88	ø8
H1010	ø10
H1212	ø12
Ⓓ Flow rate	***1**
020	18 ℓ/min(ANR)
080	80 ℓ/min(ANR)
160	160 ℓ/min(ANR)
240	240 ℓ/min(ANR)
400	440 ℓ/min(ANR)

Precautions for model No. selection

*1: The flow rate is the guide value at 0.5 MPa.
*2: DVL-S and DVL-N can be identified with the color of the push ring.
DVL-S... White
DVL-N... Blue

Combination of body size, compatible tube O.D., and flow rate

	Ⓑ Body size						
	06		08		10		
Ⓒ Compatible tube O.D. / Ⓓ Flow rate	H44	H66	H66	H88	H88	H1010	H1212
020	●	●					
080	●	●					
160		●					
240			●	●			
400					●	●	●

LCM
LCR
LCG
LCW
LCX
STM
STG
STS/STL
STR2
UCA2
ULK*
JSK/M2
JSG
JSC3/JSC4
USSD
UFCD
USC
UB
JSB3
LMB
LML
HCM
HCA
LBC
CAC4
UCAC2
CAC-N
UCAC-N
RCS2
RCC2
PCC
SHC
MCP
GLC
MFC
BBS
RRC
GRC
RV3*
NHS
HRL
LN
Hand
Chuk
MecHnd/Chuk
ShkAbs
FJ
FK
SpdContr
Ending

Flow characteristics

*The flow characteristics graph gives reference values, and does not guarantee the values.

● DVL-*-020

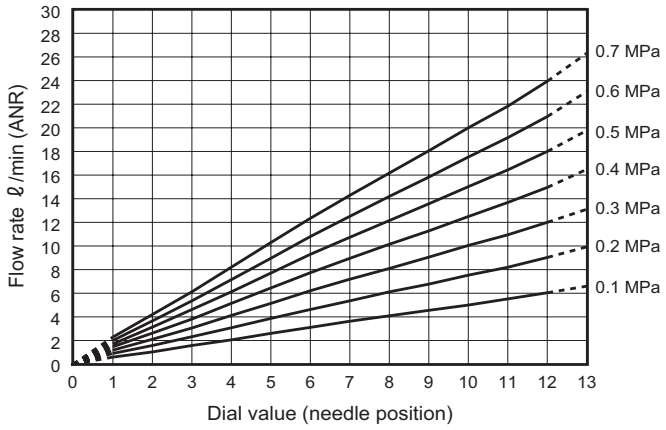

● DVL-*-080

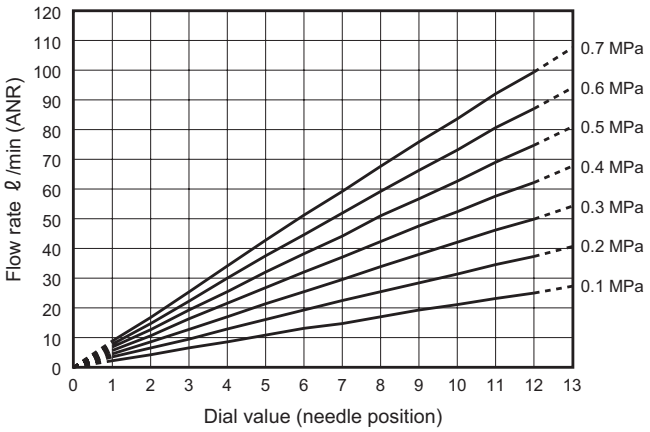

● DVL-*-160

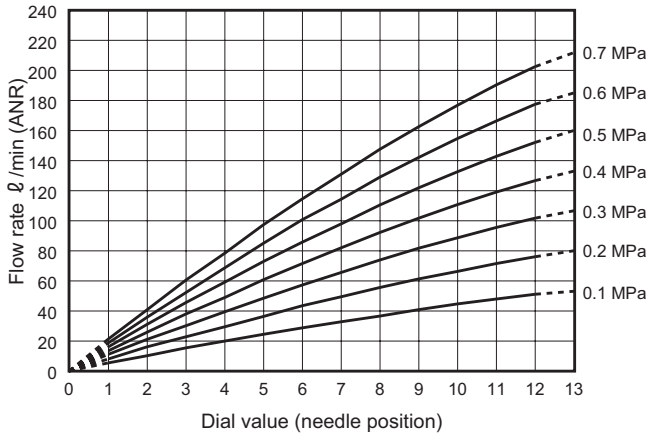

● DVL-*-240

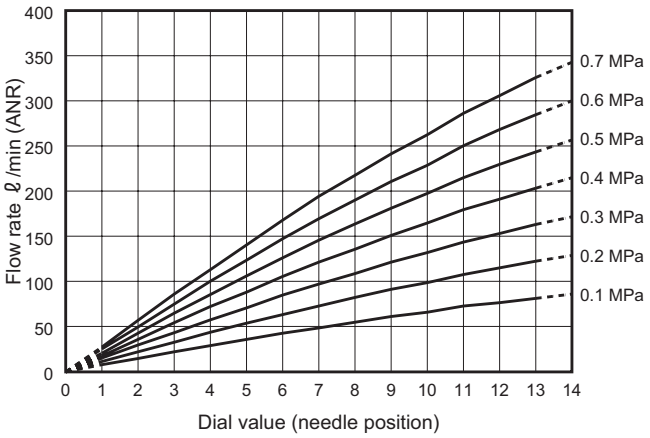

● DVL-*-400

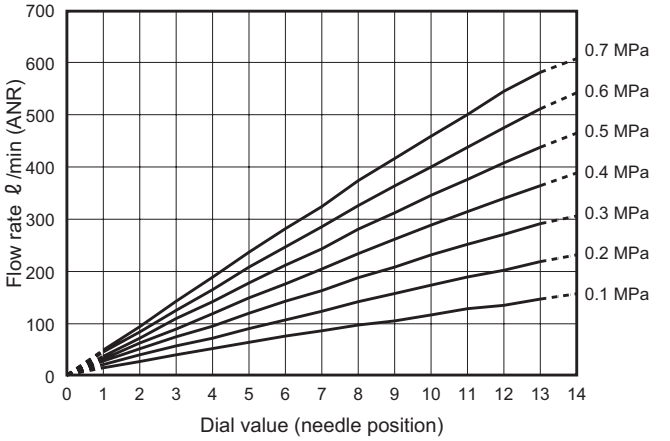

Internal structure and parts list

● DVL-S

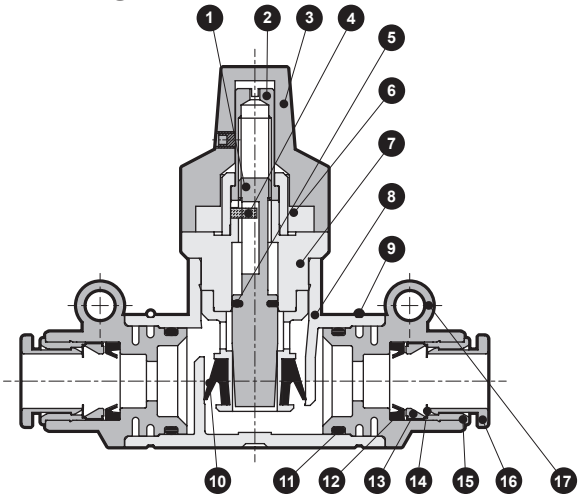

No.	Part name	Material
1	Needle	Copper alloy
2	Rotary shaft	Copper alloy
3	Dial	Aluminum alloy, polyamide, etc.
4	Parallel pin	Stainless steel
5	O-ring	Nitrile rubber
6	Guide bush	Copper alloy
7	Check bracket	Copper alloy
8	Body	Polybutylene terephthalate
9	Stopper ring	Stainless steel
10	Check packing	Hydrogenated nitrile rubber
11	O-ring	Nitrile rubber
12	Packing	Nitrile rubber
13	Holder	Copper alloy or Polyether sulfone
14	Chuck	Stainless steel
15	Outer ring	Copper alloy
16	Push ring	Polybutylene terephthalate or polyacetal
17	Fitting case	Polybutylene terephthalate

*1: All the copper alloy parts have electroless nickel plating.
*2: Some structures differ depending on the type. (No material changed)

● DVL-N

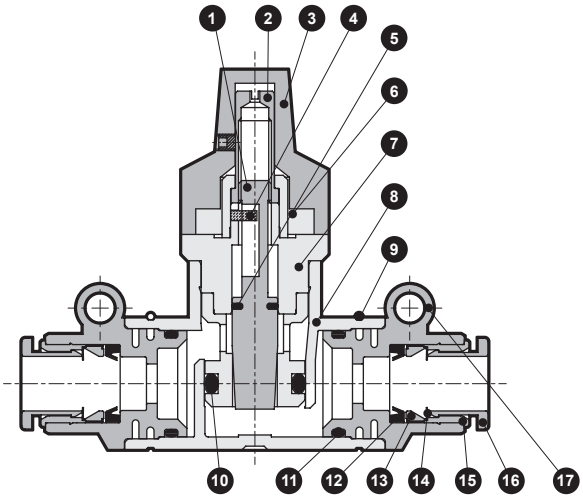

No.	Part name	Material
1	Needle	Copper alloy
2	Rotary shaft	Copper alloy
3	Dial	Aluminum alloy, polyamide, etc.
4	Parallel pin	Stainless steel
5	O-ring	Fluoro rubber
6	Guide bush	Copper alloy
7	Check bracket	Copper alloy
8	Body	Polybutylene terephthalate
9	Stopper ring	Stainless steel
10	O-ring	Hydrogenated nitrile rubber
11	O-ring	Hydrogenated nitrile rubber
12	Packing	Hydrogenated nitrile rubber
13	Holder	Copper alloy or Polyether sulfone
14	Chuck	Stainless steel
15	Outer ring	Copper alloy
16	Push ring	Polybutylene terephthalate or polyacetal
17	Fitting case	Polybutylene terephthalate

*1: All the copper alloy parts have electroless nickel plating.
*2: Some structures differ depending on the type. (No material changed)

Dimensions

CAD

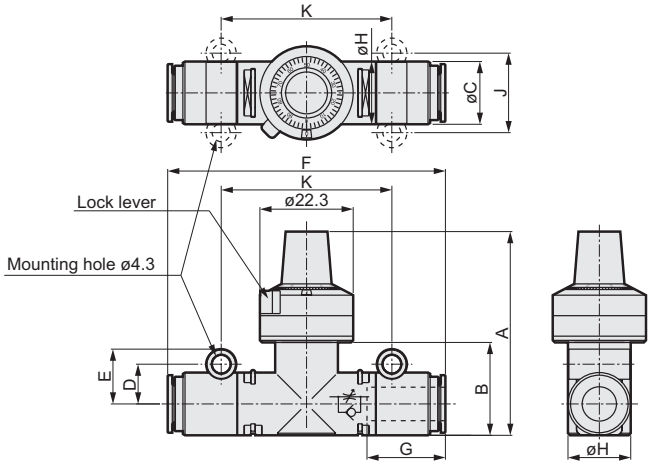

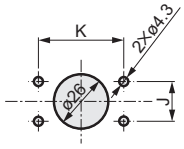

Panel mounting dimensions

Model No.	Compatible tube O.D.	A	B	C	D	E	F	H	J	K	G (tube insert length)
DVL-*-06-H44-*	ø4	45.5	17	12	8.1	11.6	55	12	16.2	30.8	12.9
DVL-*-06-H66-*	ø6						49.5				13.7
DVL-*-08-H66-*	ø6	50	22.5	13	9.5	13.1	64	15	19	41	18
DVL-*-08-H88-*	ø8			15			66.5				19
DVL-*-10-H88-*	ø8	58	29		11.5	15.1	71	20	23	47	
DVL-*-10-H1010-*	ø10			18			75				21
DVL-*-10-H1212-*	ø12			20.4			79				22

Pneumatic components (speed controller)

Safety Precautions

Be sure to read this section before use.
Refer to "Pneumatic, Vacuum and Auxiliary Components (No. CB-024SA)" for general precautions.

Product-specific cautions: Needle valve with dial

Design/selection

CAUTION

■ This valve cannot be used as a stop valve that requires no leakage.
Slight leakage is allowed for in this product's specifications.

■ Note that the flow rate may differ from the values on page 1984 depending on the piping conditions around the unit and the temperature changes.

■ Dust cannot be completely kept out of the flow path.
Even when using oil-prohibited models, install a final clean filter if dust could be a problem with the circuit.

■ Oil-prohibited specifications apply for fluid passage section only.
Do not wash this product, because grease is used for the internal parts except for the wetted sections.

■ Do not use this valve in circuits where ozone is generated.
Ozone resistance is sufficient for naturally generated ambient ozone. Packing deteriorates if ozone levels are high.

■ Use the product in the range of conditions specified for the product.
Consult with CKD when using the product for special applications.
- Use of the product exceeding the specifications range may result in insufficient performance, and safety cannot be guaranteed.
- This product may not be usable in special applications and environments. For example, use for applications requiring safety, including nuclear energy, railways, aircraft, vehicles, medical devices, devices in contact with beverages or foodstuffs, amusement devices, emergency cutoff circuits, press machines, brake circuits, or safety devices or applications.

■ Confirm before use that the product will withstand the working environment.
- This product cannot be used in environments where functional obstacles could occur.
  Such environments include high temperatures, chemical atmospheres, or where chemical liquids, vibration, moisture, water dripping or gas is present.
  Environments where ozone is generated.
- Do not use the product in a place where it could directly contact coolant or spatter, etc.

Mounting, installation and adjustment

CAUTION

■ To adjust the flow rate, turn the dial to the right to open or the left to close.

■ After adjustment, lock the dial with the sliding lock lever.

■ The flow rate control range is from "1" to "12" or "13" on the dial rotation display.
Do not set the flow rate outside this range. Turning the dial to the fully closed or fully open position forcibly may result in failure or wrong flow characteristics.

■ Even when the needle is fully closed, the dial display is not 0.
Calibration of the dial indicator flow rate is performed when the needle is not fully closed. Note that 0 is not necessarily indicated when the needle is fully closed. After "0", either "19" or no number at all is displayed.

■ Do not remove the dial from the body.
If the dial is removed, readjustment and calibration of flow characteristics cannot be performed.

■ Install a pneumatic filter before the circuit.
Flow rate fluctuates due to clogging and foreign matter in the orifice.

Mounting, installation and adjustment

■ The dial of the DVL-N is slightly stiff.
Because of the oil-prohibited specifications, dial movement may be slightly stiffer than with the DVL-S.

■ Rotate the mounting hole section at no pressurized state.

■ The mounting hole of the DVL-N is slightly stiff.
Because of the oil-prohibited specifications, movement of the rotary mounting hole will be stiffer than for the DVL-S.

■ When mounting on a panel, the stopper ring will interfere with the panel, so insert a flat washer between the mounting hole and panel.

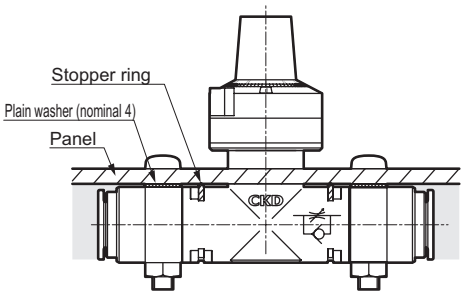

■ When piping, fix the product with a bolt or cable tie.
Movement or displacement of the product may cause disconnection of a tube.

■ Tightening torque should be 0.8 N·m when tightening the bolt to the mounting hole.

■ There is no direction for needle valve piping.

■ Stop air flow and confirm that there is no residual pressure before replacing the tube.

■ Handling push-in fittings and tubes
For handling push-in fittings and tubes, refer to the warnings and cautions for fittings and tubes in “Pneumatic/Vacuum/Auxiliary Components (No. CB-024SA)”.

■ When supplying compressed air after connecting pipes, do not suddenly apply high pressure.
The pipe connection could dislocate causing the pipe tube to fly out and result in accidents.

■ After connecting piping, check pipe connections for air leaks before supplying compressed air.
Apply a leakage detection agent on pipe connections with a brush, and check for air leaks.

■ Connect piping so that connections are not dislocated by equipment movement, vibration, tension, etc.

■ Around the pneumatic components, keep space for installation, removal and piping work.

■ Avoid using the product for applications that involve continuous rotation or oscillations.
Fittings could be damaged.

■ Avoid use in areas with large vibration or impact.

Controlling the actuator’s speed

■ Adjust the final speed each time used.
Check the final speed each time used since it should be adjusted depending on individual variability of the products and actuators, use condition and ambient temperature. Aging of the actuator may cause speed to fluctuate greatly.

■ Check the flow direction with the JIS symbol.
If installed in reverse, speed adjustment will not function and the actuator could pop out, creating a hazard.

■ Adjust speed by opening when the needle is nearly closed.
If the needle is opened, the actuator could suddenly and dangerously pop out.

■ Understand compressed air features before designing a pneumatic circuit.

Speed controller, elbow with push-in fitting

SC3W Series

● Port size: M3, M5, R1/8 to R1/2

JIS symbol

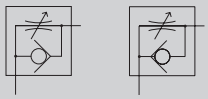

(Meter-out) (Meter-in)

RoHS CAD

Specifications

Item		SC3W																
		SC3W-M3		SC3W-M5			SC3W-6			SC3W-8			SC3W-10				SC3W-15	
Compatible tube O.D. mm		ø3.2	ø4	ø3.2	ø4	ø6	ø4	ø6	ø8	ø6	ø8	ø10	ø6	ø8	ø10	ø12	ø10	ø12
Working fluid		Compressed air																
Max. working pressure MPa		1.0 (≈150 psi, 10 bar)																
Min. working pressure MPa		0.05 (≈7.3 psi, 0.5 bar)																
Proof pressure MPa		1.5 (≈220 psi, 15 bar)																
Fluid temperature °C		5 (41°F) to 60 (140°F) (no freezing. *3)																
Ambient temperature °C		0 (32°F) to 60 (140°F) (no freezing)																
Port size		M3		M5			R1/8			R1/4			R3/8				R1/2	
Weight g		4.9	5.7	7.9	8.8	9.6	25	26	27	50	51	54	63.7	75	78	81	134	138
Dial value (needle position)		10 (14) or more		10 (16) or more			10 (15) or more			13 or more			13 or more				14 or more	
Free flow	Flow rate ℓ/min(ANR)	27(20)		87(80)			210(210)	270(270)	270	470	500	530	650	1000	1100		1500	1600
	Eff. X-sectional area mm²	0.4(0.3)		1.3(1.2)			3.2(3.2)	4.0(4.0)	4.0	7	7.5	8	10	15	16		22	24
Controlled flow	Flow rate ℓ/min(ANR)	20(5.9)		80(6.7)			190(13)	240(13)	240	430	470	470	650	930	1000		1500	1600
	Eff. X-sectional area mm²	0.3(0.08)		1.2(0.1)			2.8(0.2)	3.6(0.2)	3.6	6.5	7	7.0	10	14	15		22	24

*1: Flow rate is the atmospheric pressure conversion value at pressure 0.5 MPa.
*2: Values in ( ) indicate low speed.
*3: Freezing may occur due to adiabatic expansion depending on the air quality (dew point).

Flow characteristics

● Standard (port size M3, M5)

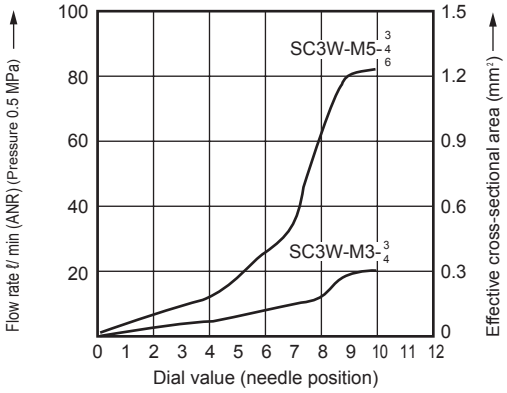

● Standard (port size 6)

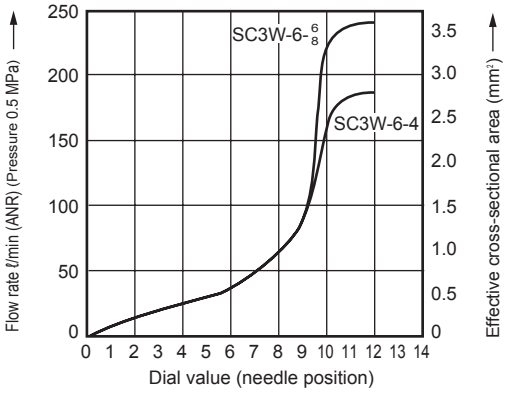

● Standard (port size 8, 10, 15)

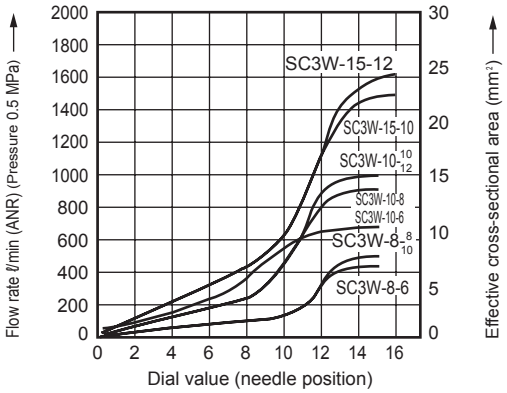

● Low speed

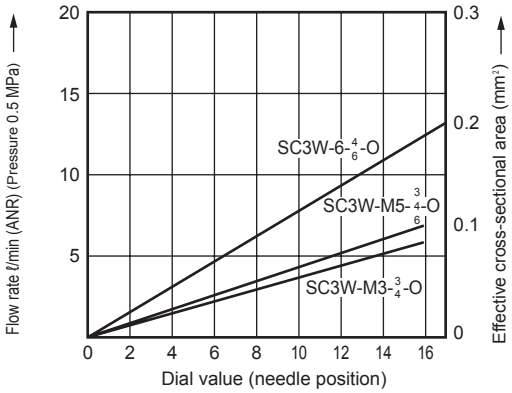

How to order

SC3W - M5 - 4 - I

Model No.

Ⓐ Port size

Ⓑ Compatible tube O.D.

Ⓒ Option *1
*2
*3

Code	Description
Ⓐ Port size	
M3	M3x0.5
M5	M5x0.8
6	R1/8
8	R1/4
10	R3/8
15	R1/2

Ⓑ Compatible tube O.D.

		Piping size					
		M3	M5	6	8	10	15
3	ø3.2	●	●				
4	ø4	●	●	●			
6	ø6		●	●	●	●	
8	ø8			●	●	●	
10	ø10				●	●	●
12	ø12					●	●

Ⓒ Option

Blank	Meter-out
I	Meter-in (Push ring color: black)
K	Hexagon lock nut
O	Low speed
P6	Copper and PTFE free specifications

is not available.

⚠ Precautions for model No. selection

*1: The options are listed in alphabetical order.
*2: "K" can be selected for port sizes M3 and M5 only.
*3: "O" can be selected for compatible tube O.D. "4" (ø4), "6" (ø6) and port size M3, M5 and "6" (R1/8) only.

[Example of model No.]

SC3W-M5-4-I

Ⓐ Port size : M5x0.8
Ⓑ Compatible tube O.D. : ø4
Ⓒ Option : Meter-in

Ozone-proof specifications (Ending Page 137)

SC3W — ····· — P11

Clean-room specifications (Catalog No. CB-033SA)

● Anti-dust generation structure for use in cleanrooms

SC3W — ····· — P7*

Specifications for rechargeable battery (Catalog No. CC-1226A)

● Design compatible with rechargeable battery manufacturing process

SC3W — ····· — P4

LCM
LCR
LCG
LCW
LCX
STM
STG
STS/STL
STR2
UCA2
ULK*
JSK/M2
JSG
JSC3/JSC4
USSD
UFCD
USC
UB
JSB3
LMB
LML
HCM
HCA
LBC
CAC4
UCAC2
CAC-N
UCAC-N
RCS2
RCC2
PCC
SHC
MCP
GLC
MFC
BBS
RRC
GRC
RV3*
NHS
HRL
LN
Hand
Chuk
MecHnd/Chuk
ShkAbs
FJ
FK
SpdContr
Ending

Internal structure and parts list

● Port size: M3, M5

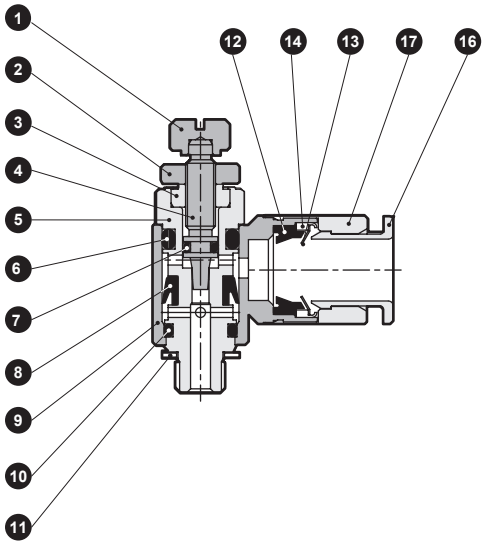

● Port size: 6, 10 (ø6 only)

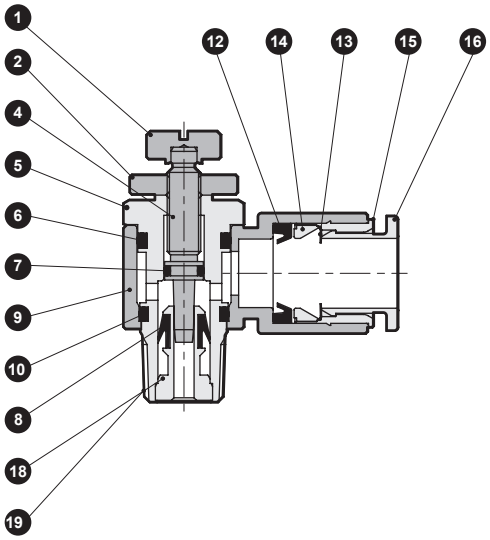

● Port size: 8, 10, 15

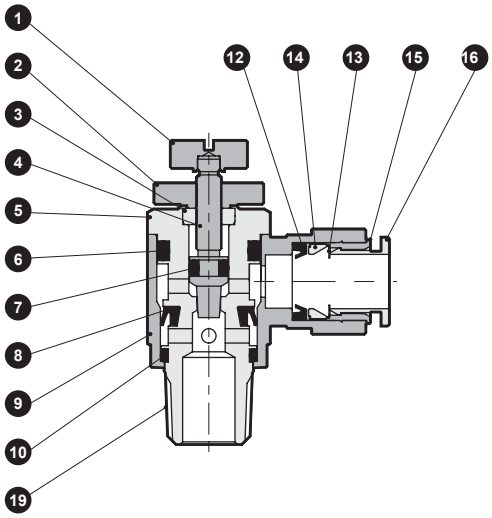

No.	Part name	Material	No.	Part name	Material
1	Knob	Copper alloy	11	Gasket	Steel + nitrile rubber (M5 only)
2	Lock nut	Copper alloy	12	Packing	Nitrile rubber
3	Gland nut	Copper alloy	13	Chuck	Stainless steel
4	Needle	Stainless steel	14	Chuck holder	M3, M5: Copper alloy
5	Rotary shaft	Copper alloy (M3, stainless steel)			R1/8 to: Polyether sulfone
6	O-ring	Nitrile rubber	15	Outer ring	Copper alloy
7	O-ring	Nitrile rubber	16	Push ring	Polybutylene terephthalate (flame-resistant resin *2)
8	Packing	Hydrogenated nitrile rubber	17	Fitting body	Copper alloy
9	Rotor	Polybutylene terephthalate (flame-resistant resin *2)	18	Check part	Copper alloy
10	O-ring	Nitrile rubber	19	Sealant	Fluorinated resin

*1 All the copper alloy parts have electroless nickel plating.
*2 UL94 Standards V-0 equivalent

Dimensions

CAD

● SC3W-M $^{3}_{5}$-*

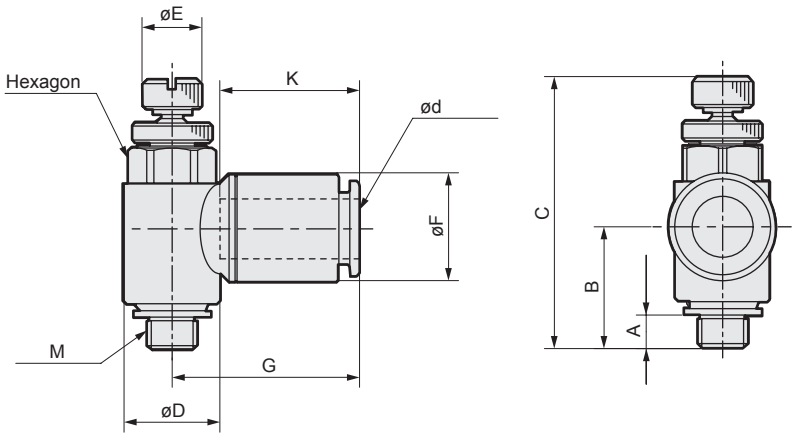

Model No.	ød (Compatible tube O.D.)	M	A	B	C		D	E	F	G	K (tube insert length)	Hexagon
					MAX	MIN						
SC3W-M3-3	ø3.2	M3x0.5	2.4	11.4	27.6	25.1	7.4	5	7.5	15.5	11.7	7
SC3W-M3-4	ø4	M3x0.5	2.4	11.4	27.6	25.1	7.4	5	8.8	16.6	12.9	7
SC3W-M5-3	ø3.2	M5x0.8	3.4	12.4	30.6	27.2	9.6	6	7.5	16.0	11.7	8
SC3W-M5-4	ø4	M5x0.8	3.4	12.4	30.6	27.2	9.6	6	8.8	17.2	12.9	8
SC3W-M5-6	ø6	M5x0.8	3.4	12.4	30.6	27.2	9.6	6	10.8	18.8	14.0	8

● SC3W-$^{6}_{8}_{10}_{15}$-* (same as low speed, standard (SC3W-6))

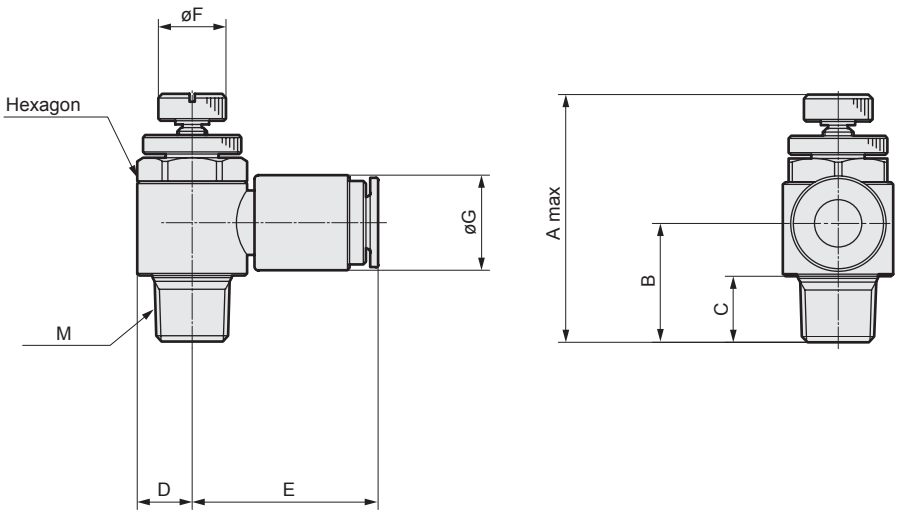

Model No.	M	Tube O.D.	A	B	C	D	E	F	G	Hexagon
SC3W-6-4	R1/8	ø4	38.4	16.2	8	7.3	23.1	9	10.0	13
SC3W-6-6		ø6	38.4	15.7	8	7.3	24.1	9	12.5	13
SC3W-6-8		ø8	38.4	15.4	8	7.3	25.3	9	14.5	13
SC3W-8-6	R1/4	ø6	51.2	25	11	9.5	27.2	12	13.8	17
SC3W-8-8		ø8	51.2	25	11	9.5	28.5	12	16.3	17
SC3W-8-10		ø10	51.2	24	11	9.5	32.0	12	19.3	17
SC3W-10-6	R3/8	ø6	52.4	23.1	12	11.3	28.3	14	12.5	19
SC3W-10-8		ø8	60.2	30.0	12	11.3	30.3	14	16.3	19
SC3W-10-10		ø10	60.2	30.0	12	11.3	33.8	14	19.3	19
SC3W-10-12		ø12	60.2	29.3	12	11.3	37.8	14	21.3	19
SC3W-15-10	R1/2	ø10	66.7	33.8	15	13.5	36.0	16	19.3	24
SC3W-15-12		ø12	66.7	33.8	15	13.5	40.0	16	21.3	24

Speed controller
Universal/push-in fitting

SC3U Series

● Port size: M3, M5, R1/8 to R1/2

JIS symbol

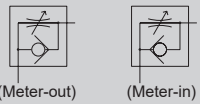

Features

● The piping direction can be set at any angle on the universal.

● Flame-resistant resin
Flame resistance PBT (equivalent to UL94 standards V-0) is provided as standard.

● The port threads are coated with fluorine-based resin sealant.

Specifications

Item		SC3U-M3		SC3U-M5			SC3U-6			SC3U-8			SC3U-10			SC3U-15	
Compatible tube O.D. mm		ø3.2	ø4	ø3.2	ø4	ø6	ø4	ø6	ø8	ø6	ø8	ø10	ø8	ø10	ø12	ø10	ø12
Working fluid		Compressed air															
Max. working pressure MPa		1.0 (≈150 psi, 10 bar)															
Min. working pressure MPa		0.05 (≈7.3 psi, 0.5 bar)															
Proof pressure MPa		1.5 (≈220 psi, 15 bar)															
Fluid temperature °C		5 (41°F) to 60 (140°F) (no freezing. *3)															
Ambient temperature °C		0 (32°F) to 60 (140°F) (no freezing)															
Port size		M3		M5			R1/8			R1/4			R3/8			R1/2	
Weight g		6.3	7.2	10	11	12	24	26	27	52	54	57	83	85	87	140	143
Dial value (needle position)		10 (14) or more		10 (16) or more			10 (15) or more		10 or more	13 or more			13 or more			14 or more	
Free flow	Flow rate ℓ/min(ANR)	31 (24)		95 (95)		105 (95)	215 (215)	270 (245)	270	475	510	540	985	1090		1500	1630
	Effective cross-sectional area mm²	0.45 (0.35)		1.4 (1.4)		1.6 (1.4)	3.2 (3.2)	4 (3.7)	4	7	7.5	8	14.5	16		22	24
Controlled flow	Flow rate ℓ/min(ANR)	34 (5.4)		95 (9.5)			190 (17)	260 (17)	260	440	475		950	1150	1220	1500	1630
	Effective cross-sectional area mm²	0.5 (0.08)		1.4 (0.14)			2.8 (0.25)	3.8 (0.25)	3.8	6.5	7		14	17	18	22	24

*1: Flow rate is the atmospheric pressure conversion value at pressure 0.5 MPa.
*2: Values in ( ) indicate low speed.
*3: Freezing may occur due to adiabatic expansion depending on the air quality (dew point).

How to order

SC3U - M5 - 4 - I

Model No.

Ⓐ Port size

Ⓑ Compatible tube O.D.

Ⓒ Option *1 *2 *3

Code	Description
Ⓐ Port size	
M3	M3x0.5
M5	M5x0.8
6	R1/8
8	R1/4
10	R3/8
15	R1/2

Ⓑ Compatible tube O.D.

		Piping size					
		M3	M5	6	8	10	15
3	ø3.2	●	●				
4	ø4	●	●	●			
6	ø6		●	●	●		
8	ø8			●	●	●	
10	ø10				●	●	●
12	ø12					●	●

Ⓒ Option

Blank	Meter-out
I	Meter-in (Push ring color: black)
K	Hexagon lock nut
O	Low speed
P6	Copper and PTFE free specifications

is not available.

⚠ Precautions for model No. selection

*1: The options are listed in alphabetical order.
*2: "K" can be selected for port sizes M3 and M5 only.
*3: "O" can be selected for compatible tube O.D. "4" (ø4), "6" (ø6) and port size M3, M5 and "6" (R1/8) only.

[Example of model No.]

SC3U-M5-4-I

Ⓐ Port size : M5 x 0.8
Ⓑ Compatible tube O.D. : ø4
Ⓒ Option : Meter-in

Ozone-proof specifications (made-to-order product)

SC3U - ···· - P11

LCM
LCR
LCG
LCW
LCX
STM
STG
STS/STL
STR2
UCA2
ULK*
JSK/M2
JSG
JSC3/JSC4
USSD
UFCD
USC
UB
JSB3
LMB
LML
HCM
HCA
LBC
CAC4
UCAC2
CAC-N
UCAC-N
RCS2
RCC2
PCC
SHC
MCP
GLC
MFC
BBS
RRC
GRC
RV3*
NHS
HRL
LN
Hand
Chuk
MecHnd/Chuk
ShkAbs
FJ
FK
SpdContr
Ending

Flow characteristics

● Standard (port size M3, M5)

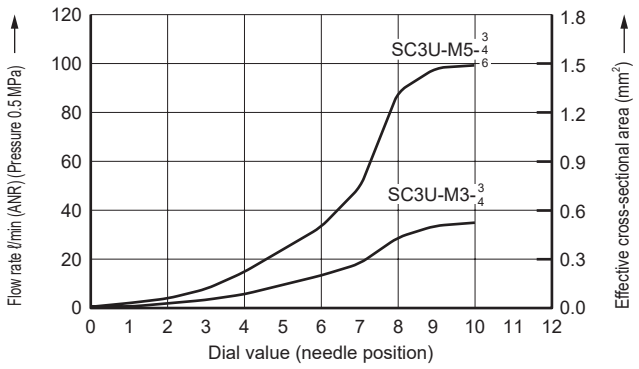

● Standard (port size 6)

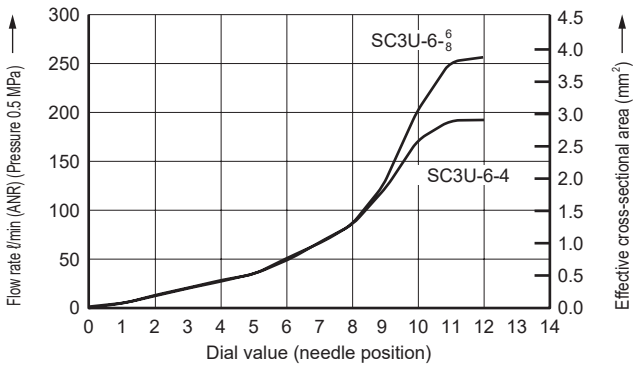

● Standard (port size 8, 10, 15)

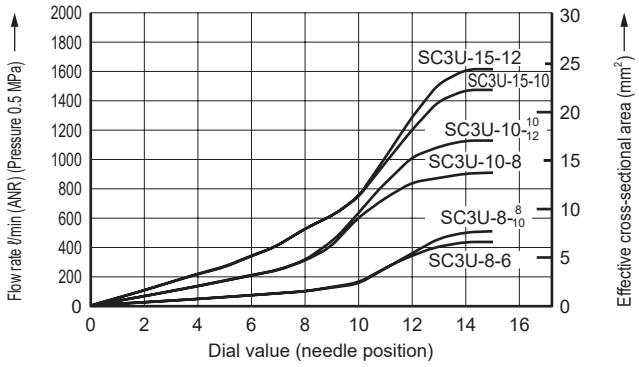

● Low speed

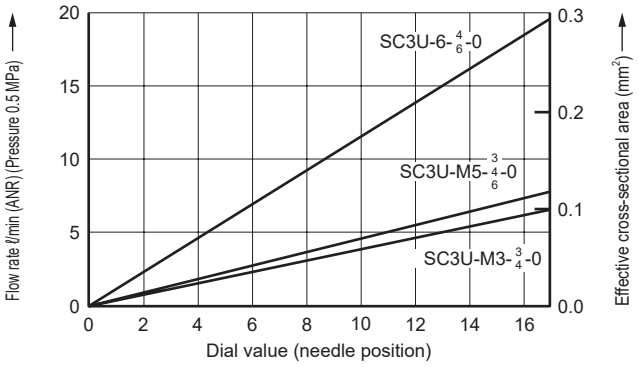

Internal structure and parts list

● SC3U-M3/M5-*

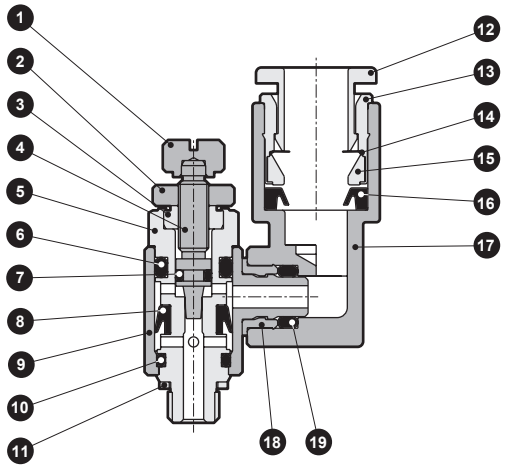

● SC3U-6-*

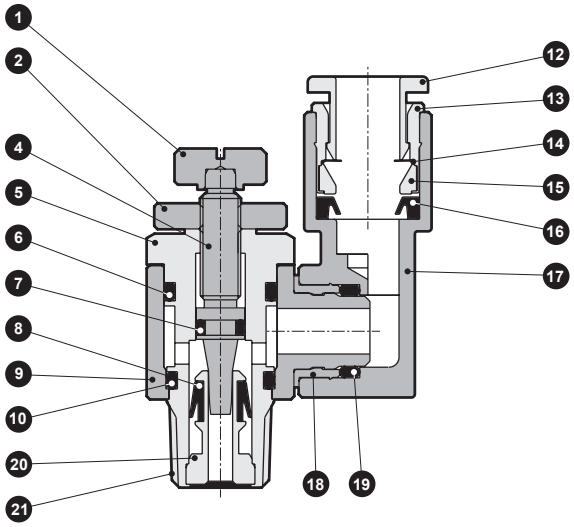

● SC3U-8/10/15-*

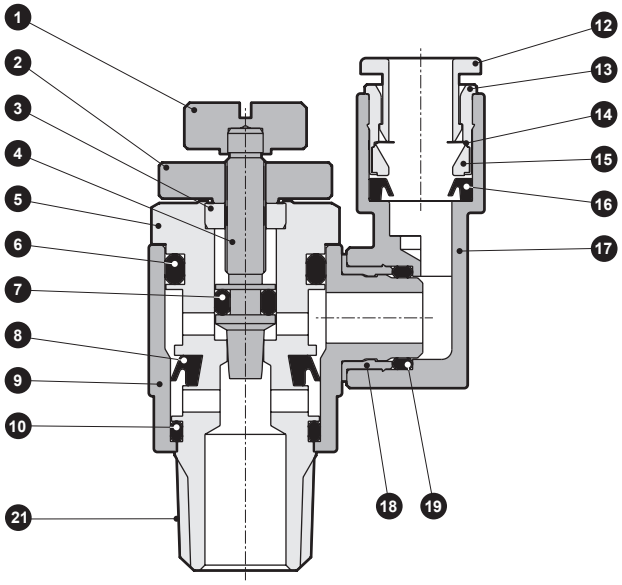

No.	Part name	Material	No.	Part name	Material
1	Knob	Copper alloy	11	Gasket	Stainless steel + nitrile rubber
2	Lock nut	Copper alloy	12	Push ring	Polybutylene terephthalate (flame-resistant resin *2)
3	Gland nut	Copper alloy	13	Outer ring	Copper alloy
4	Needle	Stainless steel	14	Chuck	Stainless steel
5	Rotary shaft	Copper alloy (M3, stainless steel)	15	Chuck holder	Polyether sulfone (Copper alloy for compatible tube O.D. ø3.2)
6	O-ring	Nitrile rubber	16	Packing	Nitrile rubber
7	O-ring	Nitrile rubber	17	Fitting body	Polybutylene terephthalate (flame-resistant resin *2)
8	V packing	Hydrogenated nitrile rubber	18	Stopper	Copper alloy
9	Rotor	Polybutylene terephthalate (flame-resistant resin *2)	19	O-ring	Nitrile rubber
10	O-ring	Nitrile rubber	20	Check part	Copper alloy
			21	Sealant	Fluorinated resin

*1 All the copper alloy parts have electroless nickel plating.
*2 UL94 Standards V-0 equivalent

LCM
LCR
LCG
LCW
LCX
STM
STG
STS/STL
STR2
UCA2
ULK*
JSK/M2
JSG
JSC3/JSC4
USSD
UFCD
USC
UB
JSB3
LMB
LML
HCM
HCA
LBC
CAC4
UCAC2
CAC-N
UCAC-N
RCS2
RCC2
PCC
SHC
MCP
GLC
MFC
BBS
RRC
GRC
RV3*
NHS
HRL
LN
Hand
Chuk
MecHnd/Chuk
ShkAbs
FJ
FK
SpdContr
Ending

Dimensions

● SC3U-*-* (the dimensions are the same for the standard and low speed)

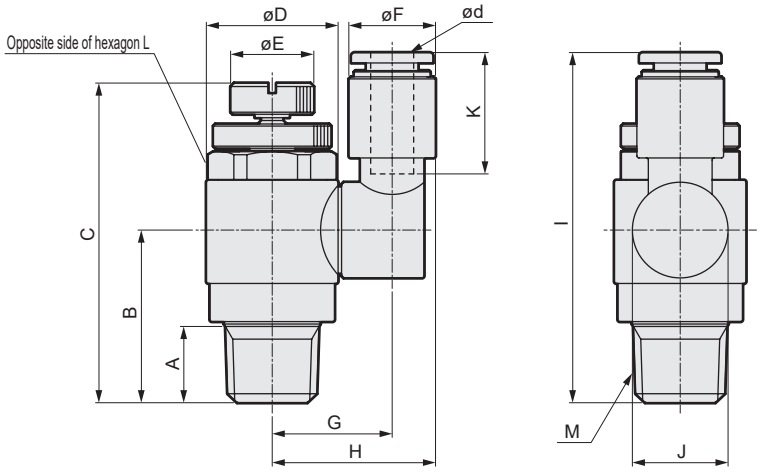

● Dimension A of SC3U- M3 / M5

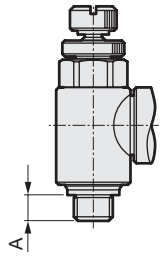

Code / Model No.	ød (Tube O.D.)	M	A	B	C MAX	C MIN	D	E	F	G	H	I	J	K (tube insert length)	L Hexagon
SC3U-M3-3	ø3.2	M3x0.5	2.4	11.4	28.5	26	7.4	5	8.5	10	14.3	28.9	9.8	12.5	7
SC3U-M3-4	ø4								10		15	32.5		16	
SC3U-M5-3	ø3.2	M5x0.8	3.4	12.4	30.8	27.8	9.6	6	8.5	11.1	15.4	30	9.8	12.5	8
SC3U-M5-4	ø4								10		16.1	33.5		16	
SC3U-M5-6	ø6								12.5	12.1	18.4	35		17.5	
SC3U-6-4	ø4	R1/8	8	15.4	39.2	33.4	14.5	9	10	14.5	19.5	39	13	16	13
SC3U-6-6	ø6								12.5	14.6	20.8	40.5		17.5	
SC3U-6-8	ø8								14.5	15.6	22.8	42		19	
SC3U-8-6	ø6	R1/4	11	24.9	51.2	46.1	19	12	12.5	17.3	23.6	50.5	13.8	17.5	17
SC3U-8-8	ø8								14.5	17.8	25.1	52		19	
SC3U-8-10	ø10								17.5	19.3	28.1	55.5		21.5	
SC3U-10-8	ø8	R3/8	12	29.8	60.2	53.1	22.5	14	14.5	19.6	26.8	57.9	16.7	19	19
SC3U-10-10	ø10								17.5	21.1	29.8	60.9		21.5	
SC3U-10-12	ø12								20	22.3	32.3	63.2		23	
SC3U-15-10	ø10	R1/2	15	33.8	66.7	59.1	27	16	17.5	23.3	32.1	65.9	18.8	21.5	24
SC3U-15-12	ø12								20	24.5	34.5	68.2		23	

Safety precautions

⚠ CAUTION

■ Safety precautions

- Always use within the product specifications.
- This product is used for compressed air. Do not use this unit for other fluids.
- Securely insert the tube to the tube end, and make sure that the tube cannot be pulled off.
- Cut the tube with a dedicated cutter and always at a right angle.
- Remove all cutting chips and foreign matter generated during piping and tube insertion before starting use.
- Provide sufficient allowance in the tube so that it does not bend sharply.
- Avoid using this product in a hot humid place, outdoors or where it is subject to direct sunlight.
- Do not use the product in a place where it could come in direct contact with coolant or spatter, etc.
- Avoid using this product in places with high levels of vibration or impact.
- The needle tolerates a slight leak even when fully closed, so do not use it as a stop valve.
- Consult with CKD for use in special environments.

■ Precautions for piping

- Always use within the recommended tightening torque range.
- Do not tighten while pressure is applied.
- Stop air flow and confirm that there is no residual pressure before replacing the tube.
- Mounting is possible by rotating in an arbitrary direction, but do not use this product in applications involving constant rotation or oscillation.
- Do not apply a load other than rotation onto the rotator and fitting connection.

Port thread	Tightening torque N·m
M3	0.3 to 0.6
M5	1.0 to 1.5
Rc1/8	3 to 5
Rc1/4	6 to 8
Rc3/8	13 to 15
Rc1/2	16 to 18

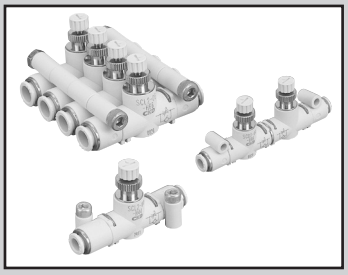

Speed controller Line type with push-in fitting

SCL2 Series

In/out speed controller Inline with push-in fitting

SCD2 Series

● Port size: ø1.8/ø4/ø6/ø8/ø10/ø12

JIS symbol

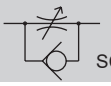

SCL2 Series

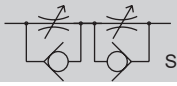

SCD2 Series

Overview

● The SCL2 Series is an inline speed controller useful for remote or centralized actuator control.
● The SCD2 Series is an integrated metering in/out speed controller that controls both air intake and exhaust flow rate.
Depending on the circuit, the actuator can be prevented from popping out, speed can be stabilized, and reciprocating single acting cylinder speed can be controlled.

Features

Unrestricted mounting

The installation area rotates by 360°, enabling mounting and installation method to be from base, side, or panel.
Mounting bracket is not required.

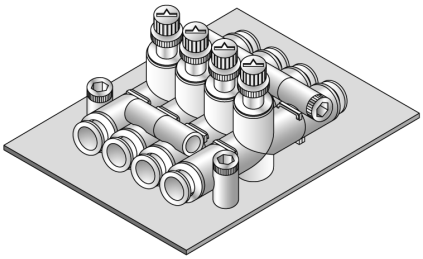

Example of base mounting

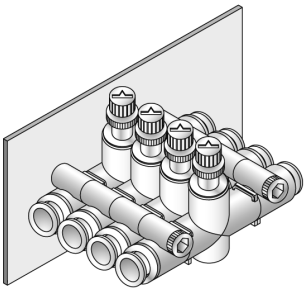

Example of wall mounting

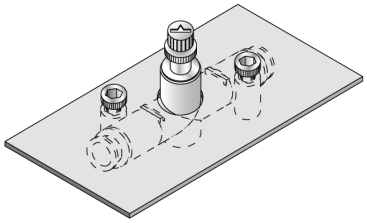

Example of panel mounting

Wide range of choices

Fiber tube specifications and large bore size have been added to the diverse lineup, expanding the size of compatible tubing to ø1.8 to ø12 diameter.

Large flow rate with compact

The max. flow rate achieved even with a compact body extends the selection range for cylinder size and speed control.

Fine speed available

Simple speed control for low and fine speed areas as well as small bore size cylinders.

Push-in connection

Push-in fittings simplify tubing connection.

Standard ozone-resistant materials

Ozone-resistant materials are used as standard for check packing to prevent deterioration.

Standard flame-resistant resin: UL94 Standard V-0 or equivalent

Refer to page 2005 for SCL2/SCD2 Series Safety Precautions.

LCM
LCR
LCG
LCW
LCX
STM
STG
STS/STL
STR2
UCA2
ULK*
JSK/M2
JSG
JSC3/JSC4
USSD
UFCD
USC
UB
JSB3
LMB
LML
HCM
HCA
LBC
CAC4
UCAC2
CAC-N
UCAC-N
RCS2
RCC2
PCC
SHC
MCP
GLC
MFC
BBS
RRC
GRC
RV3*
NHS
HRL
LN
Hand
Chuk
MecHnd/Chuk
ShkAbs
FJ
FK
SpdContr
Ending

Specifications

● Speed controller Line type SCL2

Model No.			SCL2-04			SCL2-06	SCL2-08		SCL2-10		
Compatible tube O.D.		mm	ø1.8	ø1.8/ø4	ø4	ø6	ø6	ø8	ø8	ø10	ø12
Working fluid			Compressed air								
Max. working pressure		MPa	0.7 (≈100 psi, 7 bar)		1.0 (≈150 psi, 10 bar)						
Min. working pressure		MPa	0.1 (≈15 psi, 1 bar)								
Proof pressure		MPa	1.05 (≈150 psi, 10.5 bar)		1.5 (≈220 psi, 15 bar)						
Fluid temperature		°C	5 (41°F) to 60 (140°F) (no freezing. *3)								
Ambient temperature		°C	0 (32°F) to 60 (140°F) (no freezing)								
Weight		g	13	12	11.5	16	32	33	53	57	59
Dial value (needle position)			12 [15]								
Free flow	Flow rate	ℓ/min(ANR)	[13]		130	300	400	550	900	1100	1200
	Effective cross-sectional area	mm^2	[0.2]		1.9	4.5	6	8	13.5	16.5	18
Controlled flow	Flow rate	ℓ/min(ANR)	[10]		130 [13]	300 [13]	400	550	900	1100	1200
	Effective cross-sectional area	mm^2	[0.15]		1.9 [0.2]	4.5 [0.2]	6	8	13.5	16.5	18

● In/out speed controller Inline SCD2

Model No.		SCD2-04			SCD2-06	SCD2-08		SCD2-10		
Compatible tube O.D.	mm	ø1.8	ø1.8/ø4	ø4	ø6	ø6	ø8	ø8	ø10	ø12
Working fluid		Compressed air								
Max. working pressure	MPa	0.7 (≈100 psi, 7 bar)		1.0 (≈150 psi, 10 bar)						
Min. working pressure	MPa	0.1 (≈15 psi, 1 bar)								
Proof pressure	MPa	1.05 (≈150 psi, 10.5 bar)		1.5 (≈220 psi, 15 bar)						
Fluid temperature	°C	5 (41°F) to 60 (140°F) (no freezing. *3)								
Ambient temperature	°C	0 (32°F) to 60 (140°F) (no freezing)								
Weight	g	23	22	21.5	29	63	64	108	112	114
Dial value (needle position)		12 [15]								
Flow rate	ℓ/min(ANR)	[10]	[10]	100 [13]	250 [13]	330	400	750	850	900
Effective cross-sectional area	mm^2	[0.15]	[0.15]	1.5 [0.2]	3.7 [0.2]	5	6	11	12.5	13

*1: Flow rate is the atmospheric pressure conversion at 0.5 MPa.
*2: Values in [ ] indicate fine speed.
*3: Freezing may occur due to adiabatic expansion depending on the air quality (dew point).

Clean-room specifications (Catalog No. CB-033SA)

● Anti-dust generation structure for use in cleanrooms

SCL2- ····· **P7***

Specifications for rechargeable battery (Catalog No. CC-1226A)

● Design compatible with rechargeable battery manufacturing process

SCL2
SCD2 ····· **P4**

LCM
LCR
LCG
LCW
LCX
STM
STG
STS/STL
STR2
UCA2
ULK*
JSK/M2
JSG
JSC3/JSC4
USSD
UFCD
USC
UB
JSB3
LMB
LML
HCM
HCA
LBC
CAC4
UCAC2
CAC-N
UCAC-N
RCS2
RCC2
PCC
SHC
MCP
GLC
MFC
BBS
RRC
GRC
RV3*
NHS
HRL
LN
Hand
Chuk
MecHnd/Chuk
ShkAbs
FJ
FK
SpdContr
Ending

How to order

● Speed controller Line type

SCL2 - 04 - H44 - ○

● In/out speed controller Inline

SCD2 - 04 - H44 - ○

Model No. Ⓐ Body size Ⓑ Compatible tube O.D. Ⓒ Flow characteristics

Refer to the table at right for body size, compatible tube O.D., and flow characteristic combinations.

Code	Description
Ⓐ Body size	
04	M5 thread equivalent
06	1/8 thread equivalent
08	1/4 thread equivalent
10	3/8 thread equivalent
Ⓑ Compatible tube O.D.	
H22	ø1.8
H42	Side A: ø4 Side B: ø1.8
H24 (*1)	Side A: ø1.8 Side B: ø4
H44	ø4
H66	ø6
H88	ø8
H1010	ø10
H1212	ø12
Ⓒ Flow characteristics	
Blank	Standard
F	Fine speed

⚠ Precautions for model No. selection

*1 : H24 cannot be selected for SCD2. Select H42 instead.

*2 : There is no push-in fitting compatible with Compatible tube O.D. ø1.8. For ø1.8 line type with push-in fitting, refer to "Pneumatic, Vacuum and Auxiliary Components (No. CB-024SA)".

Combination of body size, compatible tube O.D., and flow characteristics

			Ⓐ Body size			
			04	06	08	10
Ⓑ Compatible tube O.D.	H22	ø1.8	○			
	H42	ø4/ø1.8	○			
	H24 (*1)	ø1.8/ø4	○			
	H44	ø4	● ○			
	H66	ø6		● ○	●	
	H88	ø8			●	●
	H1010	ø10				●
	H1212	ø12				●

● Flow characteristics "standard"
○ Flow characteristics "fine speed"
Not available

● Illustration of combination of compatible tube O.D. (H24/H42 only)

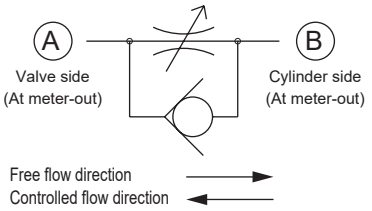

Flow characteristics

● Standard
SCL2-04, SCL2-06, SCD2-04, SCD2-06

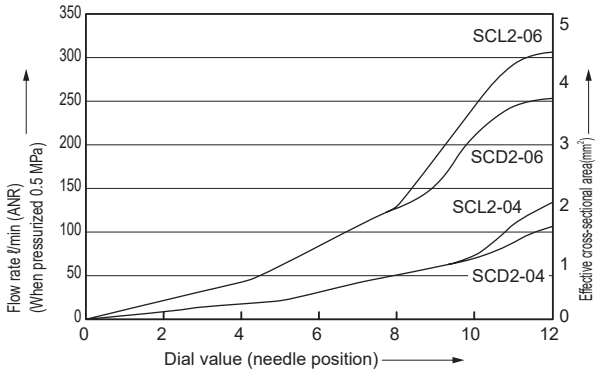

● Standard
SCL2-08, SCL2-10

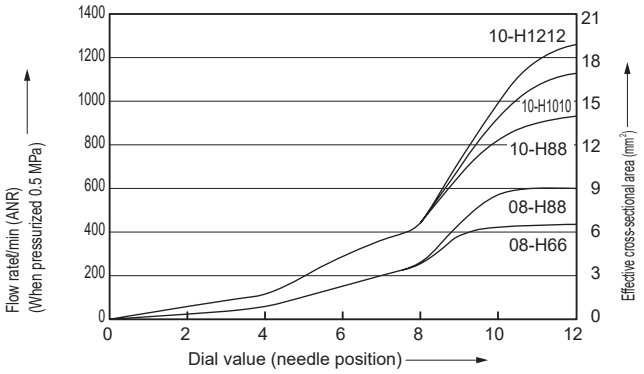

● Standard
SCD2-08, SCD2-10

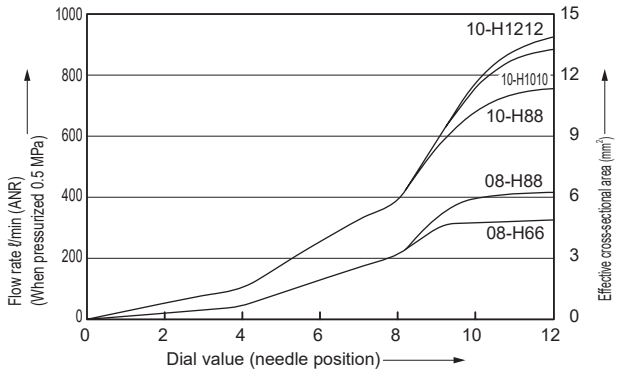

● Fine speed

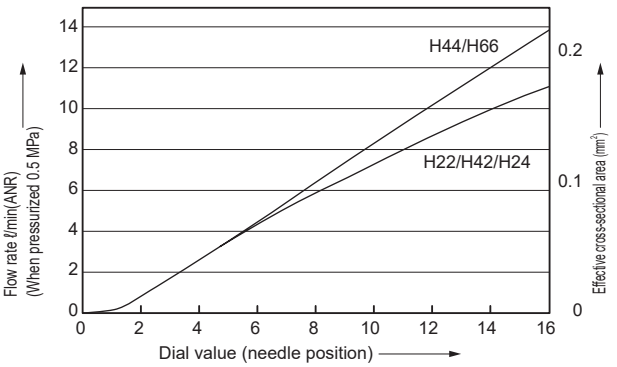

Internal structure and parts list

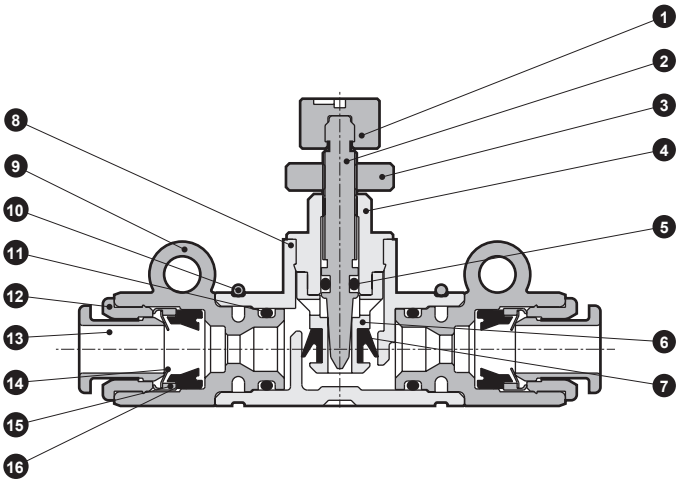

No.	Part name	Material
1	Knob	Polybutylene terephthalate
2	Needle	Copper alloy
3	Lock nut	Copper alloy
4	Guide ring	Copper alloy
5	O-ring	Nitrile rubber
6	Check bracket	Copper alloy
7	Check packing	Hydrogenated nitrile rubber
8	Body	Polybutylene terephthalate
9	Fitting case	Polybutylene terephthalate
10	Stopper ring	Stainless steel
11	O-ring	Nitrile rubber
12	Outer ring	Copper alloy
13	Push ring	Polybutylene terephthalate
14	Chuck	Stainless steel
15	Holder	Copper alloy or Polyether sulfone
16	Packing	Nitrile rubber

*1 All the copper alloy parts have electroless nickel plating.
*2 All resin parts are flame-resistant. (equivalent to UL94 standards V-0)
Excluding compatible tube O.D. ø1.8.

Dimensions

CAD

● SCL2 Series

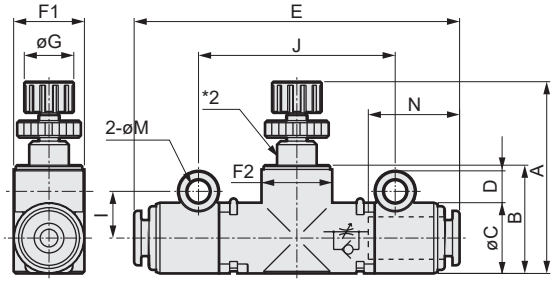

● SCD2 Series

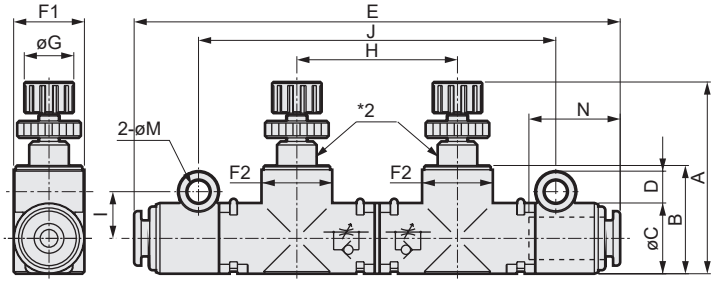

● Mounting pitch dimension for manifold

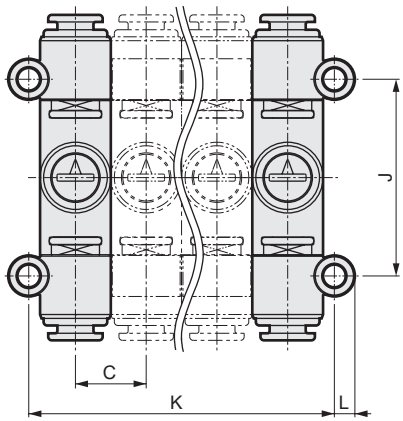

● Outline drawing of fitting for connected tube outer diameter ø1.8

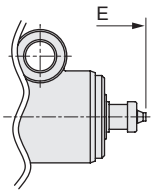

Model No.	Connected tube outer diameter	A MIN	A MAX	B	C	D	E	F1	F2	G	H	I	J	K	L	M (Mounting hole diameter)	N (tube insert length)
SCL2-04-H22 *1	ø1.8	27.1	31.6	15.3	10	4.5	50.8	10	10.6	7	-	6.6	27.8	10×n+3.2	2.9	3.3	-
SCL2-04-H42 *1	ø4/ø1.8						48.4										12.9/-
SCL2-04-H24 *1	ø1.8/ø4						48.4										-/12.9
SCL2-04-H44	ø4						46										12.9
SCL2-06-H66	ø6	28.8	33.3	17.7	12	5.6	49.4	12	12.2	7	-	8.1	30.8	12×n+4.2	3.5	4.3	13.7
SCL2-08-H66	ø6	38	44.5	22.9	15	5.6	64	15	15.5	11	-	9.5	41	15×n+4	3.6		18
SCL2-08-H88	ø8						66.5										19
SCL2-10-H88	ø8	44	50.5	29.7	20	5.1	71	20	20.5	11	-	11.5	47	20×n+3			19
SCL2-10-H1010	ø10						75										21
SCL2-10-H1212	ø12				20.4	4.9	79							20.4×n+3			22
SCD2-04-H22 1	ø1.8	27.1	31.6	15.3	10	4.5	73.5	10	10.6	7	22.7	6.6	50.5	10×n+3.2	2.9	3.3	-
SCD2-04-H42 1	ø4/ø1.8						71.1										12.9/-
SCD2-04-H44	ø4						68.7										12.9
SCD2-06-H66	ø6	28.8	33.3	17.7	12	5.6	73.9	12	12.2	7	24.5	8.1	55.3	12×n+4.2	3.5	4.3	13.7
SCD2-08-H66	ø6	38	44.5	22.9	15	5.6	97.5	15	15.5	11	34	9.5	75	15×n+4	3.6		18
SCD2-08-H88	ø8						100										19
SCD2-10-H88	ø8	44	50.5	29.7	20	5.1	111	20	20.5	11	40.5	11.5	87.5	20×n+3			19
SCD2-10-H1010	ø10						115										21
SCD2-10-H1212	ø12				20.4	4.9	119							20.4×n+3			22

*1: Connection tubing is a fitting dedicated to fiber tube.
*2: There is a slit at this location on the fine speed.
*3: F1 and F2 dimensions are oval.

Needle valve Line type with push-in fitting

SCL2-N Series

● Port size: ø4/ø6/ø8

JIS symbol

Features

Unrestricted mounting

The installation area rotates by 360°, enabling mounting and installation method to be from base, side, or panel.
Mounting bracket is not required.

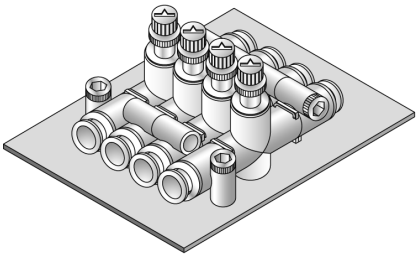

Example of base mounting

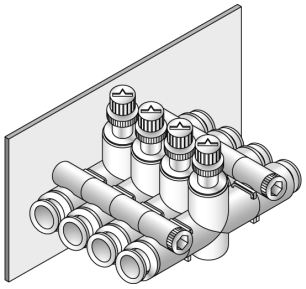

Example of wall mounting

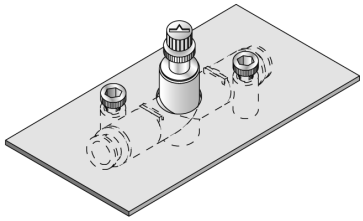

Example of panel mounting

Low-evaporation grease

This series is suitable for oil-sensitive environments and systems. This product is also compatible with oil-prohibited clean packaging “oil-prohibited specifications.”

Linear flow characteristics

A flat dedicated needle for flow adjustment is used.

Specifiable flow size

Four flow rate sizes of 13/50/150 and 300 ℓ/min. at 0.5 MPa are available to enable precise flow rate adjustment.

Push-in connection

Push-in fittings simplify tubing connection.

Standard flame-resistant resin: UL94 Standard V-0 or equivalent

■ SCL2-N Series applications

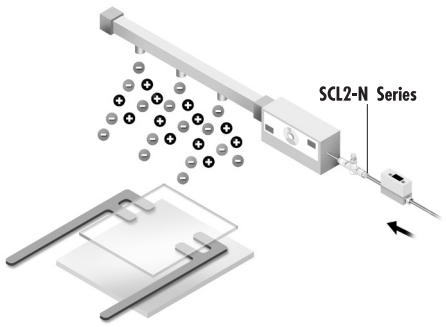

- Flow characteristics of ionizer purge gas
- Air blow in clean room
- N2 purge circuit
- Adjustment of workpiece unloading blow rate for disk former
- Flow rate control at tension control

Specifications

Model No.	SCL2-N-04	SCL2-N-06	SCL2-N-08	
Compatible tube O.D. mm	ø4	ø6	ø6	ø8
Working fluid	Compressed air/N_2 gas			
Max. working pressure MPa	1.0 (≈150 psi, 10 bar)			
Negative pressure kPa	-100 (≈-15 psi, -1 bar)			
Proof pressure MPa	1.5 (≈220 psi, 15 bar)			
Fluid temperature °C	5 (41°F) to 60 (140°F) (no freezing. Note)			
Ambient temperature °C	0 (32°F) to 60 (140°F) (no freezing)			
Weight g	11.5	16	32	33
Dial value (needle position)	12 (15 rotations for flow rate 010)			

Note: Freezing may occur due to adiabatic expansion depending on the air quality (dew point).

Flow characteristics

Flow rate code	010	050	150	300
Max. flow rate (at 0.5 MPa) ℓ/min(ANR)	13	50	150	300
Effective cross-sectional area mm^2	0.2	0.7	2.2	4.5

Note: Flow rate is the atmospheric pressure conversion at 0.5 MPa.

How to order

● Needle valve Line type

SCL2 - N - 04 - H44 - 010 -

Model No.

Ⓐ Body size

Ⓑ Compatible tube O.D.

Refer to the table at right for the body size, compatible tube O.D., and flow rate combinations.

Ⓒ Flow rate type

Ⓓ Option

Code	Description
Ⓐ Body size	
04	M5 thread equivalent
06	1/8 thread equivalent
08	1/4 thread equivalent
Ⓑ Compatible tube O.D.	
H44	ø4
H66	ø6
H88	ø8
Ⓒ Flow rate	
010	Refer to
050	specifications and
150	flow rate
300	characteristics graph
Ⓓ Option	
Blank	Standard specifications
P80	Oil-prohibited specifications

Combination of body size, compatible tube O.D., and flow rate

Ⓒ Flow rate	Ⓐ Body size - Ⓑ Compatible tube O.D.			
	04-H44	06-H66	08-H66	08-H88
010	●	●		
050	●	●		
150		●		
300			●	●

Not available

Flow characteristics

● Flow rate "010"

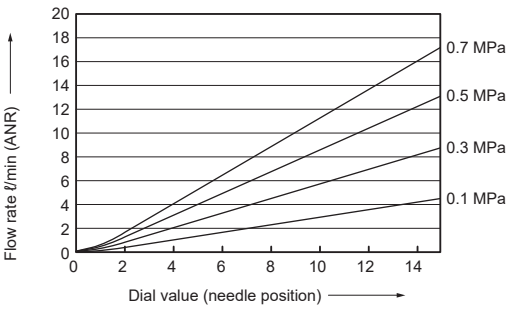

● Flow rate "150"

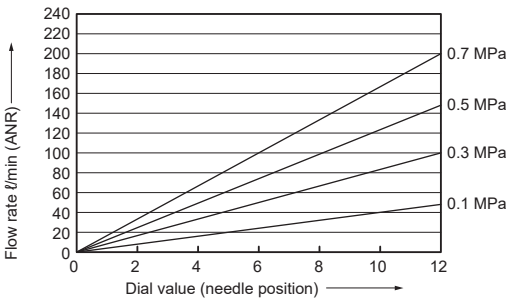

● Flow rate "050"

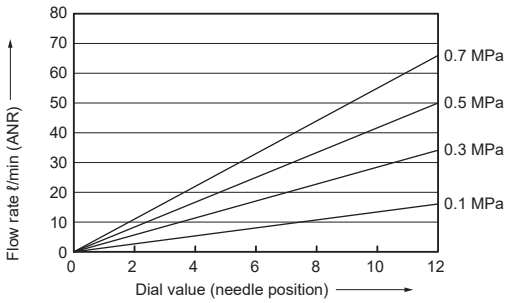

● Flow rate "300"

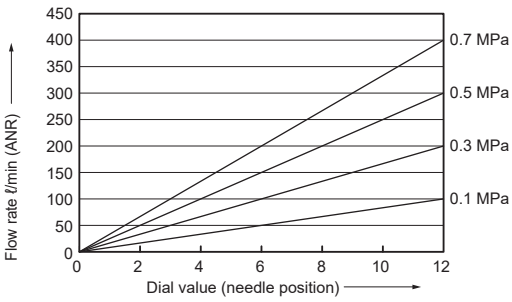

LCM
LCR
LCG
LCW
LCX
STM
STG
STS/STL
STR2
UCA2
ULK*
JSK/M2
JSG
JSC3/JSC4
USSD
UFCD
USC
UB
JSB3
LMB
LML
HCM
HCA
LBC
CAC4
UCAC2
CAC-N
UCAC-N
RCS2
RCC2
PCC
SHC
MCP
GLC
MFC
BBS
RRC
GRC
RV3*
NHS
HRL
LN
Hand
Chuk
MecHnd/Chuk
ShkAbs
FJ
FK
SpdContr
Ending

Internal structure and parts list

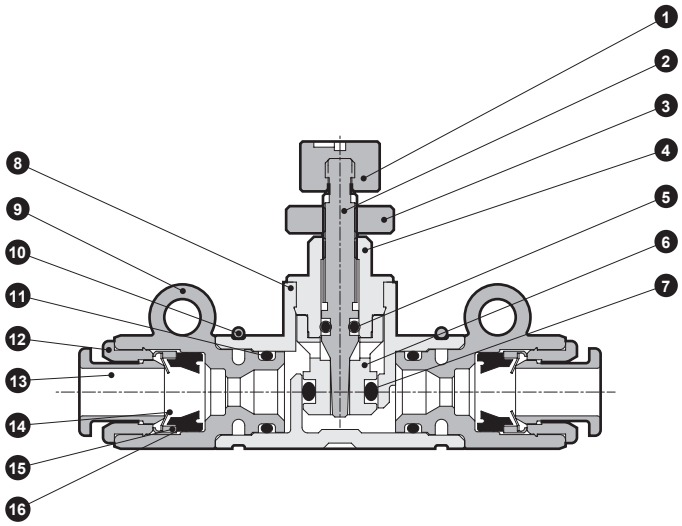

No.	Part name	Material
1	Knob	Polybutylene terephthalate
2	Needle	Copper alloy
3	Lock nut	Copper alloy
4	Guide ring	Copper alloy
5	O-ring	Nitrile rubber
6	Check bracket	Copper alloy
7	O-ring	Nitrile rubber
8	Body	Polybutylene terephthalate
9	Fitting case	Polybutylene terephthalate
10	Stopper ring	Stainless steel
11	O-ring	Nitrile rubber
12	Outer ring	Copper alloy
13	Push ring	Polybutylene terephthalate or polyacetal
14	Chuck	Stainless steel
15	Holder	Copper alloy or Polyether sulfone
16	Packing	Nitrile rubber (hydrogenated nitrile rubber) *2

*1 All the copper alloy parts have electroless nickel plating.
*2 ( ): When P80 is selected

Dimensions

CAD

● SCL2-N Series

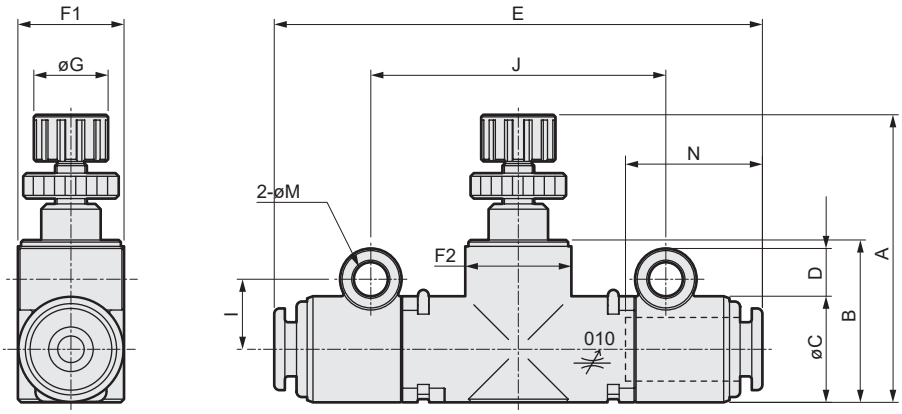

Model No.	Connected tube outer diameter	A MIN	A MAX	B	C	D	E	F1	F2	G	I	J	K	L	M (Mounting hole diameter)	N (tube insert length)
SCL2-N-04-H44	ø4	27.1	31.6	15.3	10	4.5	46	10	10.6	7	6.6	27.8	10×n+3.2	2.9	3.3	12.9
SCL2-N-06-H66	ø6	28.8	33.3	17.7	12	5.6	49.4	12	12.2	7	8.1	30.8	12×n+4.2	3.5	4.3	13.7
SCL2-N-08-H66	ø6	38	44.5	22.9	15	5.6	64	15	15.5	11	9.5	41	15×n+4	3.8		18
SCL2-N-08-H88	ø8						66.5									19

Note: F1 and F2 dimensions are oval.

* Can be distinguished from a speed controller with the color of the knob.
  Speed controller ..... White knob
  Needle valve ..... Gray knob
* The fitting push ring is blue for option P80 (oil-prohibited specifications).

LCM
LCR
LCG
LCW
LCX
STM
STG
STS/STL
STR2
UCA2
ULK*
JSK/M2
JSG
JSC3/JSC4
USSD
UFCD
USC
UB
JSB3
LMB
LML
HCM
HCA
LBC
CAC4
UCAC2
CAC-N
UCAC-N
RCS2
RCC2
PCC
SHC
MCP
GLC
MFC
BBS
RRC
GRC
RV3*
NHS
HRL
LN
Hand
Chuk
MecHnd/Chuk
ShkAbs
FJ
FK
SpdContr
Ending

Design/selection

⚠ CAUTION

- Do not use this valve in circuits where ozone is generated intentionally.
  Ozone resistance is sufficient for naturally generated ambient ozone. Check packing deteriorates if ozone levels are high.

- This valve cannot be used as a stop valve that requires no leakage. Slight leakage is allowed for in this product's specifications.

- Note that not all of the resin parts of the needle valve are flame-resistant.

- The flow path in the needle valve is not completely free of dust generation. A final clean filter should be used in circuits where dust generation could be a problem.

Mounting, installation and adjustment

⚠ CAUTION

- Rotate the mounting hole section in a non-pressurized state.

- When mounting on a panel, the stopper ring will interfere with the panel, so insert a flat washer between the mounting hole and panel.

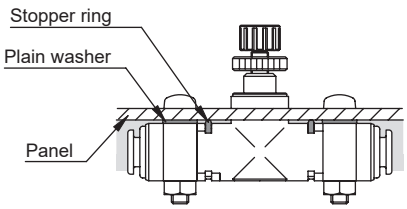

- Tighten bolts in mounting holes using the torques (or less) shown below.

Model No.	Tightening torque
SCL(D)2-04	0.5 N·m
SCL(D)2-06/08/10	0.8 N·m

- As tubing may be dislocated due to product oscillation or torsion, fix the product with bolts or Insulok ties, etc., when piping.

- Do not turn the dial forcibly when fully closing or opening it (0.05 N·m or less). Do not use the lock nut to adjust the needle. Otherwise this could cause needle galling or damage.

- Tightening the lock nut excessively can cause problems. Do not use a torque higher than what is indicated in the following table.

Model No.	Tightening torque
SCL(D)2-04/06	0.2 N·m
SCL(D)2-08/10	0.3 N·m

- The adjustment knob of the "P80 (oil-prohibited specifications)" option may be slightly hard to turn.

- There is no directionality for needle valve piping.

- Connect the fiber tube (ø1.8 fitting) in the following procedure ((1) to (5)).

(1) Set the collar at the very back.

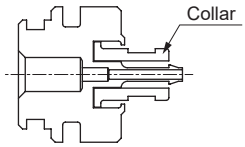

(2) Cut the end of fiber tube at a right angle.

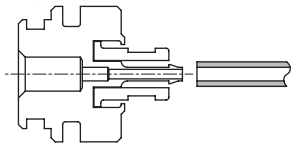

(3) Pass the collar through, and confirm that the fiber tube is correctly inserted while carrying out the work.

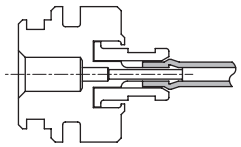

(4) Insert fiber tube to the last position.

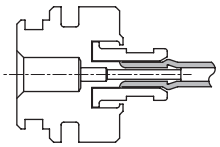

(5) Pull the collar forward to lock it.

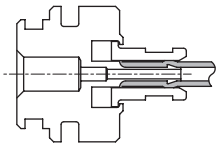

LCM
LCR
LCG
LCW
LCX
STM
STG
STS/STL
STR2
UCA2
ULK*
JSK/M2
JSG
JSC3/JSC4
USSD
UFCD
USC
UB
JSB3
LMB
LML
HCM
HCA
LBC
CAC4
UCAC2
CAC-N
UCAC-N
RCS2
RCC2
PCC
SHC
MCP
GLC
MFC
BBS
RRC
GRC
RV3*
NHS
HRL
LN
Hand
Chuk
MecHnd/Chuk
ShkAbs
FJ
FK
SpdContr
Ending

Example of in/out speed controller

1 Speed is stabilized by controlling with an in/out speed controller.

[Example 1] In low-speed control with a single rod cylinder, the cylinder pops out immediately after the PUSH side operates if a meter-out circuit is used.
[Example 2] When vertically mounted, the cylinder pops out immediately after actuation because of the load weight.
Speed is stabilized by using a meter in/out circuit.

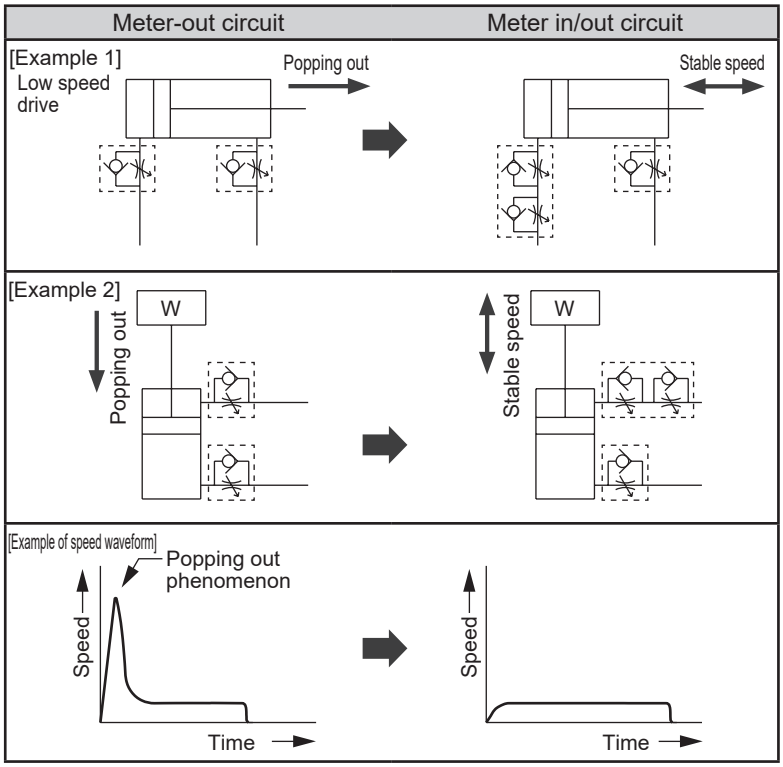

[Cause of popping out phenomenon]
When using the meter-out circuit, flow on the exhaust side is restricted, so both sides reach the same pressure immediately after the valve is switched. The thrust equivalent to the difference in the piston's pressurized area or the thrust equivalent to the load's weight causes popping out.
When the piston moves, exhaust pressure rises, speed decelerates, and the set speed is reached.
If popping out is caused by this phenomenon, fluctuation in sudden thrust is suppressed by restricting the flow on the supply side, and popping out is resolved.

2 Danger can be prevented by suppressing popping out at the beginning of movement after residual pressure is released.

3 Reciprocating speed control is possible with a single acting cylinder.

MEMO

Speed controller stainless steel corrosion-resistant

SC3P Series

● Port size: M5, R1/8 to R1/2

JIS symbol

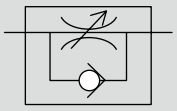

RoHS CAD

Features

- The speed control valve uses highly anti-corrosive stainless steel equivalent to SUS303 (Cr 20% and Mo 2%). As copper alloy material is not used, this product is suitable for atmospheres where copper ions should be avoided.
- Standard ozone-resistant materials
  Ozone-proof materials for degradation prevention are used as a standard for the check packing.
- Ecological products
  With this RoHS Directive compatible product, all substances which adversely affect the global environment have been eliminated from the materials.

Specifications

Model No.		SC3P														
Item		SC3P-M5		SC3P-6			SC3P-8			SC3P-10				SC3P-15		
Compatible tube O.D.	mm	ø4	ø6	ø4	ø6	ø8	ø6	ø8	ø10	ø6	ø8	ø10	ø12	ø8	ø10	ø12
Working fluid		Compressed air														
Max. working pressure	MPa	0.9 (≈130 psi, 9 bar)														
Min. working pressure	MPa	0.1 (≈15 psi, 1 bar)														
Proof pressure	MPa	1.35 (≈200 psi, 13.5 bar)														
Ambient temperature	°C	0 (32°F) to 60 (140°F) (no freezing)														
Port size	Rc	M5		R1/8			R1/4			R3/8				R1/2		
Weight	g	7	7.6	17	17	20	33	36	39	63	63	66	69	95	98	101
Dial value (needle position)		7 or more		12 or more			13 or more									

*1: Freezing may occur by adiabatic expansion depending on the air quality (dew point).

How to order

SC3P - 8 - 8 - I

Model No.

Ⓐ Port size

Ⓑ Compatible tube O.D.

Ⓒ Option

Code	Description
Ⓐ Port size	
M5	M5×0.8
6	R1/8
8	R1/4
10	R3/8
15	R1/2

Ⓑ Compatible tube O.D.

		Piping size				
		M5	6	8	10	15
4	**ø4**	●	●			
6	**ø6**	●	●	●	●	
8	**ø8**		●	●	●	●
10	**ø10**			●	●	●
12	**ø12**				●	●

Ⓒ Option	
Blank	Meter-out control
I	Meter-in control

is not available.

LCM
LCR
LCG
LCW
LCX
STM
STG
STS/STL
STR2
UCA2
ULK*
JSK/M2
JSG
JSC3/JSC4
USSD
UFCD
USC
UB
JSB3
LMB
LML
HCM
HCA
LBC
CAC4
UCAC2
CAC-N
UCAC-N
RCS2
RCC2
PCC
SHC
MCP
GLC
MFC
BBS
RRC
GRC
RV3*
NHS
HRL
LN
Hand
Chuk
MecHnd/Chuk
ShkAbs
FJ
FK
SpdContr
Ending

Flow rate and effective cross-sectional area

Model No.		SC3P														
Item		SC3P-M5		SC3P-6			SC3P-8			SC3P-10				SC3P-15		
Compatible tube O.D. mm		ø4	ø6	ø4	ø6	ø8	ø6	ø8	ø10	ø6	ø8	ø10	ø12	ø8	ø10	ø12
Free flow	Flow rate ℓ/min(ANR)	55		200		230	390	400		600	800		840	1140	1380	
	Effective cross-sectional area mm²	0.9		3		3.5	5.9	6		9	12		12.5	17	21	
Controlled flow	Flow rate ℓ/min(ANR)	70		150			270			550	850	920		1100	1450	1600
	Effective cross-sectional area mm²	1.1		2.3			4			8	12.8	14		16.5	22	24

*1: Flow rate is the atmospheric pressure conversion value at pressure 0.5 MPa.
*2: The effective cross-sectional area lists the value converted from the flow rate.

Flow characteristics

[Free flow]

● SC3P-M5-*

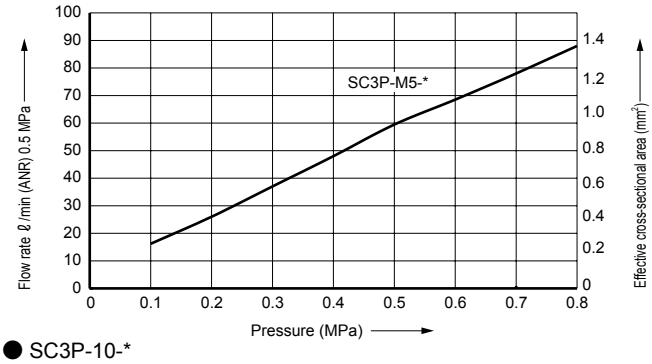

● SC3P-6-*, SC3P-8-*

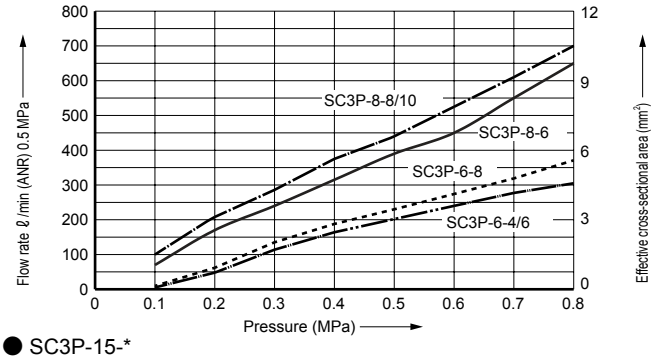

● SC3P-10-*

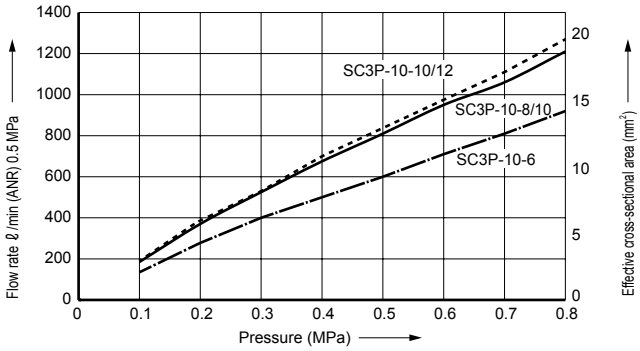

● SC3P-15-*

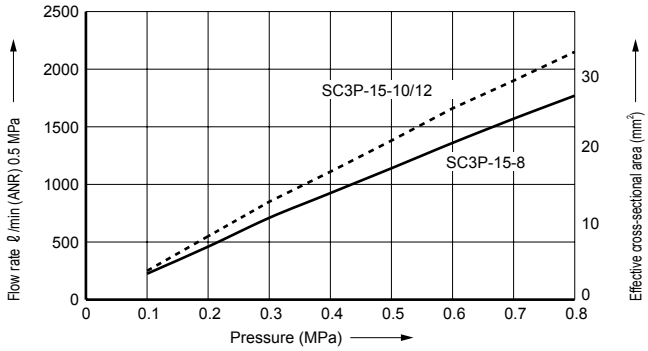

[Controlled flow]

● SC3P-M5-*

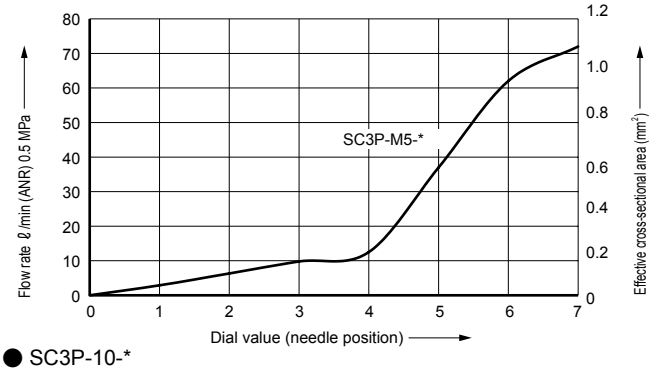

● SC3P-6-*, SC3P-8-*

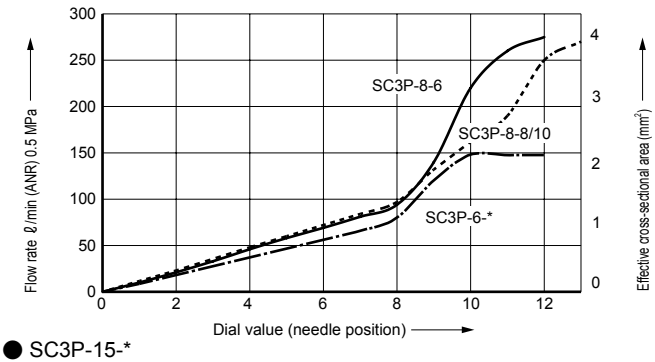

● SC3P-10-*

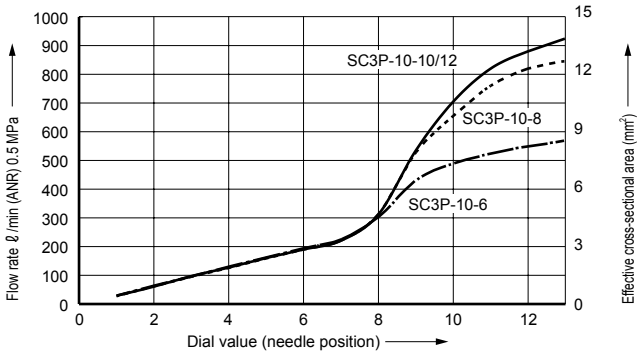

● SC3P-15-*

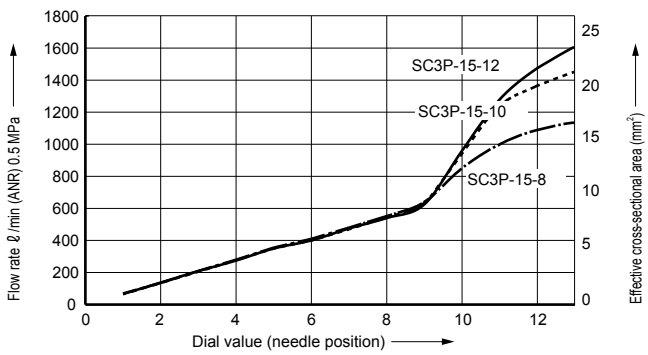

LCM
LCR
LCG
LCW
LCX
STM
STG
STS/STL
STR2
UCA2
ULK*
JSK/M2
JSG
JSC3/JSC4
USSD
UFCD
USC
UB
JSB3
LMB
LML
HCM
HCA
LBC
CAC4
UCAC2
CAC-N
UCAC-N
RCS2
RCC2
PCC
SHC
MCP
GLC
MFC
BBS
RRC
GRC
RV3*
NHS
HRL
LN
Hand
Chuk
MecHnd/Chuk
ShkAbs
FJ
FK
SpdContr
Ending

Dimensions

Identification

Stamp	Control method
A	Meter-out control
B	Meter-in control

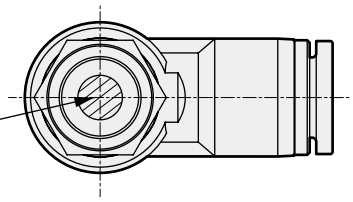

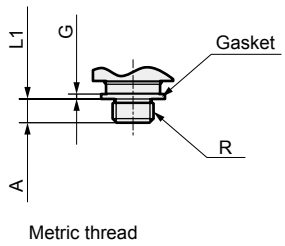

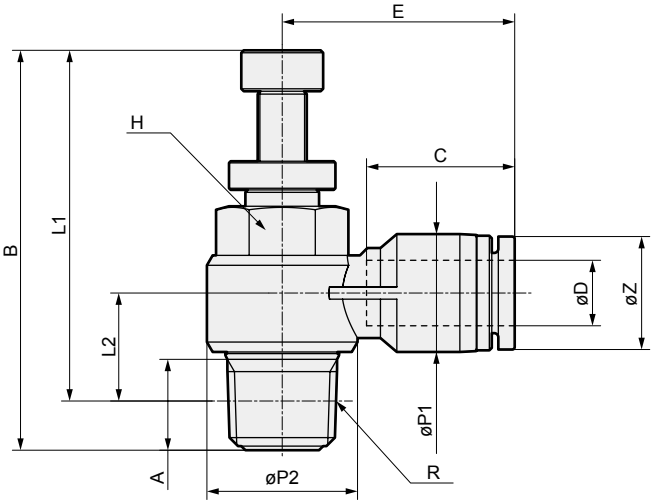

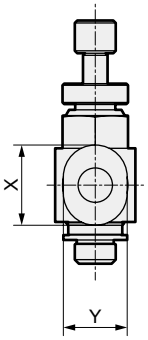

Code / Model No.	øD tube O.D.	R	A	B MAX	B MIN	L1 MAX	L1 MIN	L2	øP1	øP2	C tube end	E	H opposite side	øZ	X	Y
SC3P-M5-4	ø4	M5×0.8	3.2	29.7	27.0	26.5	23.8	6.4	8	9.8	11.3	15.7	8	-	9.8	7.8
SC3P-M5-6	ø6							7.2	10.5		11.8	17.7		-	11.8	9.8
SC3P-6-4	ø4	R1/8	8	41.5	34.9	37.5	30.9	10.7	8	14.4	11.3	18	10	-	9.8	7.8
SC3P-6-6	ø6							10.7	10.5		11.8	18.5		-	11.8	9.8
SC3P-6-8	ø8							11.9	14.4		18.1	26.9		13.8	-	-
SC3P-8-6	ø6	R1/4	11.1	48.9	42.2	42.8	36.1	11.9	10.5	18.4	11.8	20.4	14	-	11.8	9.8
SC3P-8-8	ø8							13.2	14.4		18.1	28.4		13.8	-	-
SC3P-8-10	ø10							14.8	17.6		20.2	30.9		16.8	-	-
SC3P-10-6	ø6	R3/8	13.2	54.4	46.9	48	40.5	15.4	14.4	22	17	29	19	11.8	-	-
SC3P-10-8	ø8							15.4	14.4		18.1	28.9		13.8	-	-
SC3P-10-10	ø10							16.7	17.6		20.2	31.2		16.8	-	-
SC3P-10-12	ø12							18.4	21		23.4	36.9		19.8	-	-
SC3P-15-8	ø8	R1/2	16	59.7	52.4	51.5	44.2	18	14.4	28	18.1	31	24	13.8	-	-
SC3P-15-10	ø10							18	17.6		20.2	33.6		16.8	-	-
SC3P-15-12	ø12							19.7	21		23.4	36.4		19.8	-	-

* The taper female thread L1 and L2 dimensions are the reference dimensions after tightening.

Internal structure and parts list

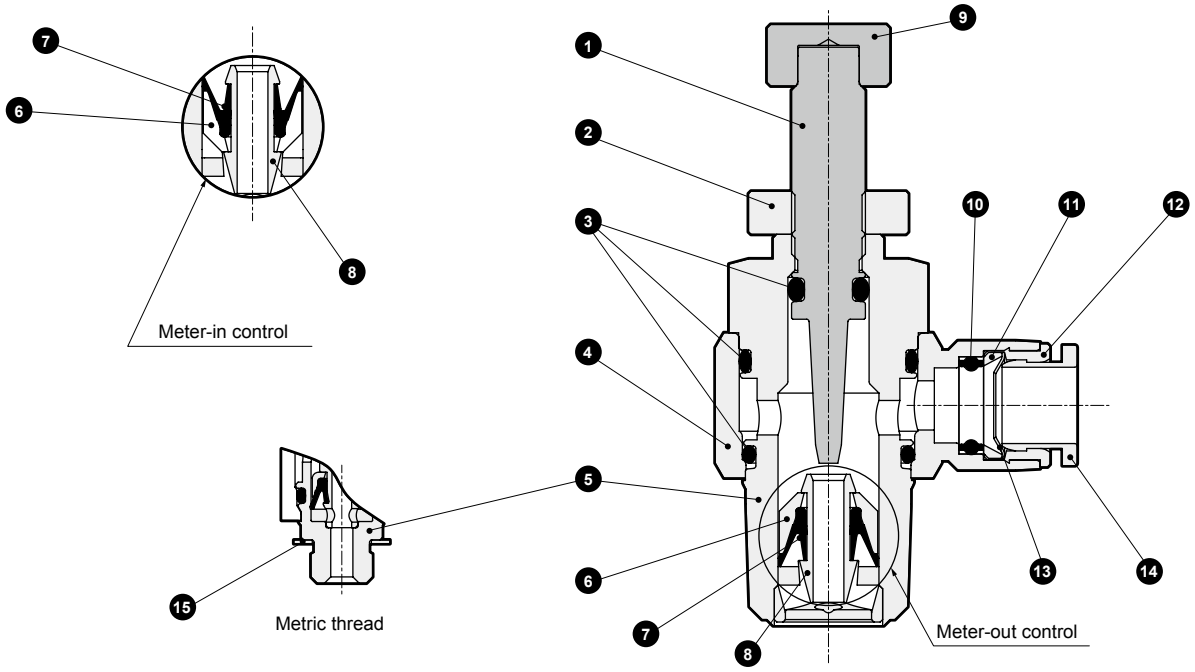

No.	Part name	Material	No.	Part name	Material
1	Needle	Stainless steel (SUS303 or equivalent)	9	Knob	Stainless steel (SUS303 or equivalent)
2	Lock nut	Stainless steel (SUS303 or equivalent)	10	Elastic sleeve	Hydrogenated nitrile rubber
3	O-ring	Hydrogenated nitrile rubber	11	Lock ring	Stainless steel (SUS303 or equivalent)
4	Resin body	Polybutylene terephthalate	12	Guide ring	Stainless steel (SUS303 or equivalent)
5	Metal body	Stainless steel (SUS303 or equivalent)	13	Lock claw	Stainless steel (SUS301)
6	Basket	Polybutylene terephthalate	14	Release ring	Polyacetal
7	Check packing	Hydrogenated nitrile rubber	15	Gasket	Polyphenylene sulfide
8	Core guide	Stainless steel (SUS303 or equivalent)			

Safety precautions

- Always use within the product specifications.
- This product is used for compressed air. Do not use this unit for other fluids.
- Securely insert the tube to the tube end, and make sure that the tube cannot be pulled off.
- Cut the tube with a dedicated cutter and always at a right angle.
- Remove all cutting chips and foreign matter generated during piping and tube insertion before starting use.
- Provide sufficient allowance in the tube so that it does not bend sharply.
- Avoid using this product in a hot humid place, outdoors or where it is subject to direct sunlight.
- Avoid using this product in places with high levels of vibration or impact.
- The needle tolerates a slight leak even when fully closed, so do not use it as a stop valve.
- Stop air flow and confirm that there is no residual pressure before replacing the tube.
- The chemical resistance level is equivalent to SUS440. This product cannot be used when a higher chemical resistance is required.
- Be sure to contact CKD when using in a corrosive atmosphere.
  The fitting body could be damaged under some conditions.

■ Precautions for piping

- Always use within the recommended tightening torque range.
- Do not tighten while pressure is applied.
- Stop air flow and confirm that there is no residual pressure before replacing the tube.
- Mounting is possible by rotating in an arbitrary direction, but do not use this product in applications involving constant rotation or oscillation.

[Recommended tightening torque]

Port thread	Tightening torque N·m
M5	1.0 to 1.5
R1/8	7 to 9
R1/4	12 to 14
R3/8	22 to 24
R1/2	28 to 30

Speed controller direct piping/elbow

SC3R Series

● Port size: M5, Rc1/8 to Rc1/2

JIS symbol

(Meter-out)

(Meter-in)

RoHS CAD

Specifications

Item		SC3R-M5	SC3R-6	SC3R-8	SC3R-10	SC3R-15
Working fluid		Compressed air				
Max. working pressure MPa		1.0 (≈150 psi, 10 bar)				
Min. working pressure MPa		0.05 (≈7.3 psi, 0.5 bar)				
Proof pressure MPa		1.5 (≈220 psi, 15 bar)				
Fluid temperature °C		5 (41°F) to 60 (140°F) (no freezing) *2				
Ambient temperature °C		0 (32°F) to 60 (140°F) (no freezing)				
Port size		M5	Rc1/8	Rc1/4	Rc3/8	Rc1/2
Weight g		14	40	70	110	190
Cylinder bore size mm		ø6 to ø16	ø15 to ø32	ø20 to ø50	ø32 to ø75	ø40 to ø110
Dial value (needle position)		11	14	14	14	16
Free flow	Flow rate ℓ/min(ANR)	80	270	500	1100	1600
	Eff. X-sectional area mm^2	1.2	4.0	7.5	16	24
Controlled flow	Flow rate ℓ/min(ANR)	47	240	470	1100	1600
	Eff. X-sectional area mm^2	0.7	3.6	7.0	15	24

*1: Flow rate is the atmospheric pressure conversion at 0.5 MPa.
*2: Freezing may occur due to adiabatic expansion depending on the air quality (dew point).

SC3R — M5 — I

Ⓐ Port size

Ⓑ Option

Code	Description
Ⓐ Port size	
M5	M5×0.8
6	Rc1/8
8	Rc1/4
10	Rc3/8
15	Rc1/2
Ⓑ Option	
I	Meter-in
Blank	Meter-out

Ozone-proof specifications

(Ending Page 137)

SC3R — ····· — P11

Clean-room specifications

(Catalog No. CB-033SA)

● Anti-dust generation structure for use in cleanrooms

SC3R — ····· — P7*

Flow characteristics

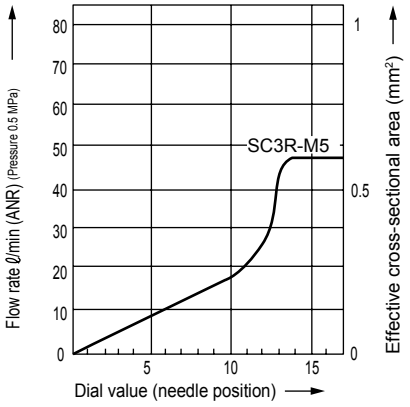

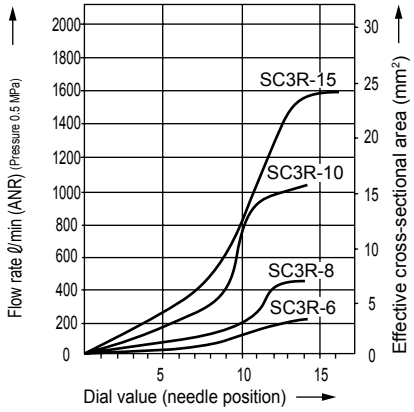

Internal structure and parts list

● SC3R-M5

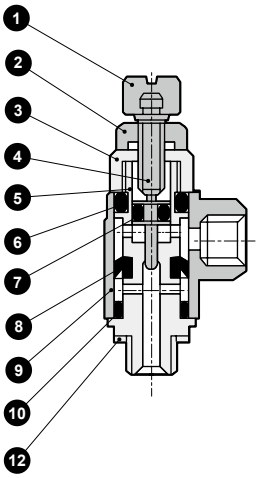

● SC3R-6 to 15

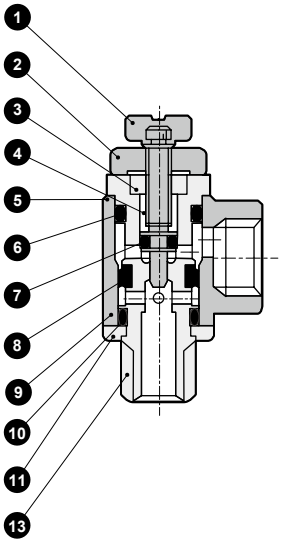

No.	Part name	Material
1	Knob	Copper alloy
2	Lock nut	Copper alloy
3	Gland nut	Copper alloy
4	Needle	Stainless steel
5	Rotary shaft	Copper alloy
6	O-ring	Nitrile rubber
7	O-ring	Nitrile rubber
8	Packing	Hydrogenated nitrile rubber
9	Rotor	Zinc die-casting (copper alloy)
10	O-ring	Nitrile rubber
11	Snap ring	Polybutylene terephthalate resin
12	M5 gasket	Nitrile rubber + steel
13	Sealant	Fluorinated resin

* ( ): SC3R-M5
* All the copper alloy parts have electroless nickel plating.

Dimensions

CAD

● SC3R-M5

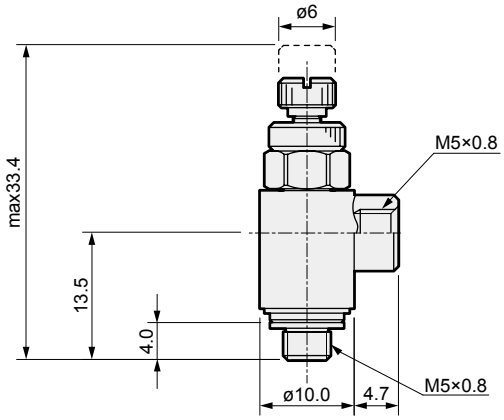

● SC3R-6 to 15

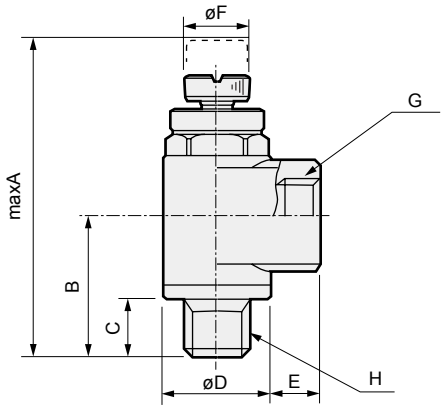

Model No.	A	B	C	D	E	F	G	H
SC3R-6	42.5	18.8	7.7	15.0	6.7	9	Rc1/8	R1/8
SC3R-8	51.2	23.2	10.7	19.0	9.4	12	Rc1/4	R1/4
SC3R-10	60.2	27.0	11.7	22.5	10.0	14	Rc3/8	R3/8
SC3R-15	66.7	30.0	14.7	27.0	13.7	16	Rc1/2	R1/2

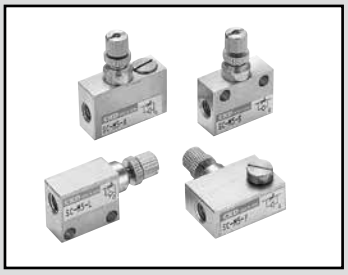

Miniature speed controller

SC-M3/M5

Compact and lightweight enabling space-saving piping. Low speed and fine speed are available.

JIS symbol

SC-M5-S
SC-M5-F

SC-M5-L
SC-M5-A

RoHS CAD

Specifications

Item		SC-M3-S	SC-M3-L	SC-M3-F	SC-M3-A	SC-M5-S	SC-M5-L	SC-M5-F	SC-M5-A
Working fluid		Compressed air							
Max. working pressure MPa		0.7 (≈100 psi, 7 bar)							
Min. working pressure MPa		0.1 (≈15 psi, 1 bar)							
Proof pressure MPa		1.05 (≈150 psi, 10.5 bar)							
Fluid temperature °C		5 (41°F) to 60 (140°F) (no freezing) *1							
Ambient temperature °C		0 (32°F) to 60 (140°F) (no freezing)							
Port size		M3				M5			
Weight g		1.7	1.5	2.4	2.4	5.6(6)	4.8(5.2)	7.9(8.3)	8.5(8.9)
Cylinder bore size mm		ø2.5 to ø10				ø6 to ø25			
Dial value (needle position)		10				10(14)			
Free flow	Flow rate ℓ/min(ANR)	20				53			
	Eff. X-sectional area mm^2	0.3				0.8			
Controlled flow	Flow rate ℓ/min(ANR)	16				47(6.7)			
	Eff. X-sectional area mm^2	0.25				0.7(0.1)			

*1: Freezing may occur due to adiabatic expansion depending on the air quality (dew point).
*2: Flow rate is the atmospheric pressure conversion at 0.5 MPa.
*3: Values in ( ) indicate fine speed.

Flow characteristics

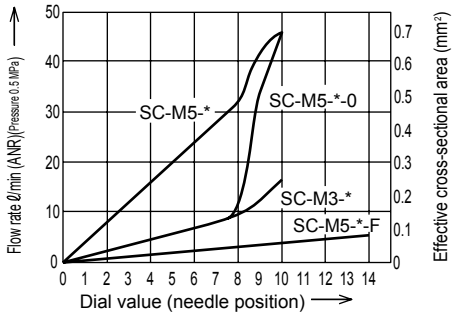

How to order

SC - M3 - A - I F

Ⓐ Port size

Ⓑ Shape

Ⓒ Control method

Ⓓ Flow characteristics

Code	Description
Ⓐ Port size	
M3	M3×0.5
M5	M5×0.8
Ⓑ Shape	
S	Straight
L	Elbow
F	Flat
A	Adjustable
Ⓒ Control method	
Blank	Meter-out
I	Meter-in
Ⓓ Flow characteristics	
Blank	Standard
O	Low speed (M5 only)
F	Fine speed (M5 only)

*1: For fine speed, the lock nut exterior is blue.
2: Not available for SC--S-I. Install SC-*-S with reverse-mounted IN and OUT.

Internal structure and parts list

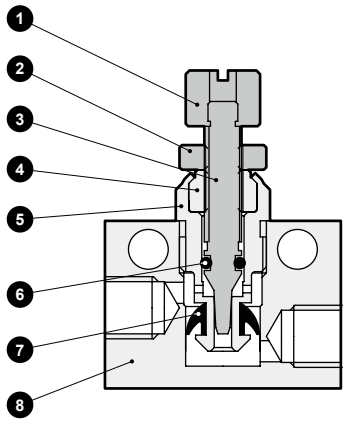

No.	Part name	Material
1	Knob	Aluminum alloy
2	Lock nut	Aluminum alloy
3	Needle	Stainless steel
4	Needle guide	Aluminum alloy
5	Check bracket	Aluminum alloy
6	O-ring	Nitrile rubber
7	Packing	Hydrogenated nitrile rubber
8	Body	Aluminum alloy

Note: For fine speed, the material of the needle guide is stainless steel.

Dimensions

CAD

● SC-M3/M5-S (straight)

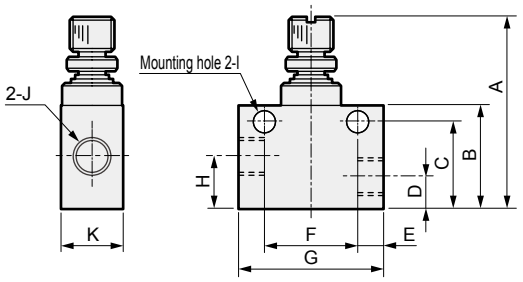

Model No.	A	B	C	D	E	F	G	H	I	J	K
SC-M3-S	18.5(max21)	9	7.3	2.5	2.5	8	13	4.2	ø2.2	M3×0.5	5
SC-M5-S	25(max28.5)	13.5	11.2	4.2	3.5	12	19	6.5	ø3.2	M5×0.8	8

● SC-M3/M5-L (elbow)

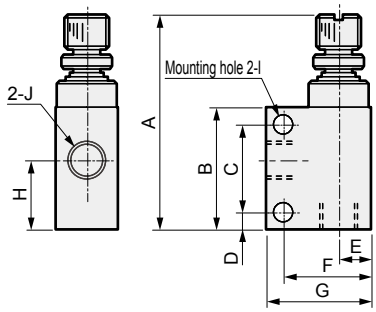

Model No.	A	B	C	D	E	F	G	H	I	J
SC-M3-L	20.3(max22.8)	10.5	7	1.9	2.5	6.5	9	5.7	ø2.2	M3×0.5
SC-M5-L	27.5(max31)	16	11.5	2.2	4.3	11.2	13.5	9	ø3.2	M5×0.8

● SC-M3/M5-F (flat)

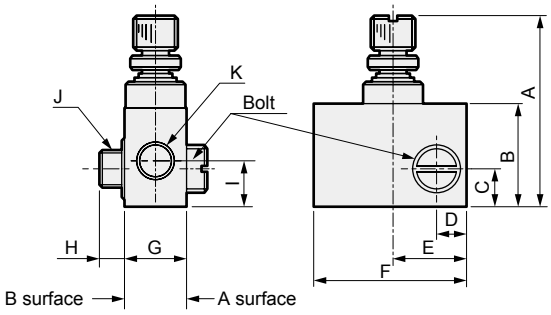

Model No.	A	B	C	D	E	F	G	H	I	J	K
SC-M3-F	18.5(max21)	9	3.4	2.7	6.5	13	5	3	4.2	M3×0.5	M3×0.5
SC-M5-F	25(max28.5)	13.5	5.1	4	10.5	20	8	3.5	6.5	M5×0.8	M5×0.8

Note: The bolt can be removed from the main body and installed from either A or B surfaces.

● SC-M3/M5-A (adjustable)

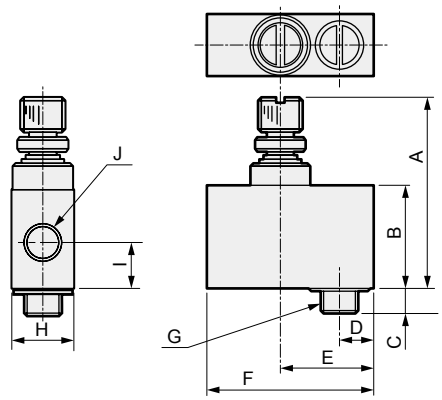

Model No.	A	B	C	D	E	F	G	H	I	J
SC-M3-A	18.5(max21)	9	3	3.2	8	14.5	M3×0.5	5	4.2	M3×0.5
SC-M5-A	25(max28.5)	13.5	3.5	4.5	12.5	22	M5×0.8	8	6.5	M5×0.8

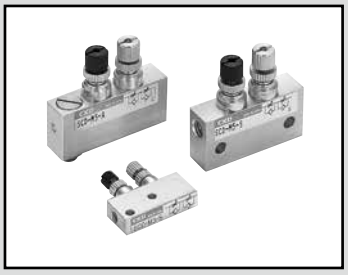

Miniature meter-in meter-out speed controller

SCD-M3/M5 Series

Compact, lightweight and thin body. Speed control valve for air supply and exhaust.

JIS symbol

● SCD-M*-S (Straight)

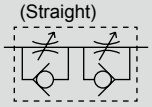

● SCD-M*-A (Adjustable)

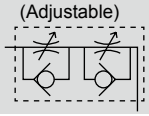

RoHS CAD

Specifications

Item	SCD-M3-S	SCD-M3-A	SCD-M5-S	SCD-M5-A	SCD-M5-S-F	SCD-M5-A-F
Working fluid	Compressed air					
Max. working pressure MPa	0.7 (≈100 psi, 7 bar)					
Min. working pressure MPa	0.1 (≈15 psi, 1 bar)					
Proof pressure MPa	1.05 (≈150 psi, 10.5 bar)					
Fluid temperature °C	5 (41°F) to 60 (140°F) (no freezing. *1)					
Ambient temperature °C	0 (32°F) to 60 (140°F) (no freezing)					
Port size	M3×0.5		M5×0.8			
Cylinder bore size mm	ø4 to ø8		ø6 to ø25			
Dial value (needle position)	10				14	
Weight g	3.1	3.9	10	11.7	10.8	12.5
Control flow rate ℓ/min(ANR)	13		37		6.7	
Eff. X-sectional area mm^2	0.2		0.55		0.1	

*1: Freezing may occur due to adiabatic expansion depending on the air quality (dew point).
*2: Flow rate is the atmospheric pressure conversion at 0.5 MPa.

How to order

SCD - M3 - S - F

Model No.

Ⓐ Port size

Ⓑ Shape

Ⓒ Flow characteristics

Code	Description
Ⓐ Port size	
M3	M3×0.5
M5	M5×0.8
Ⓑ Shape	
S	Straight
A	Adjustable
Ⓒ Flow characteristics	
Blank	Standard
F	Fine speed (M5 only)

*1: For fine speed, the lock nut exterior is blue.

Flow characteristics

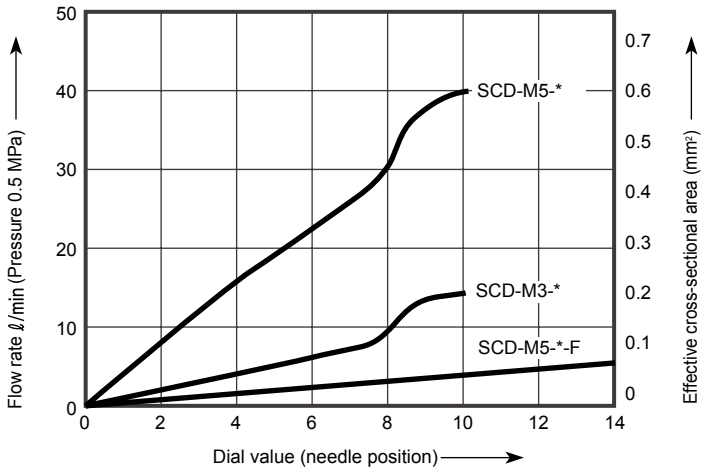

Internal structure and parts list

● Adjustable

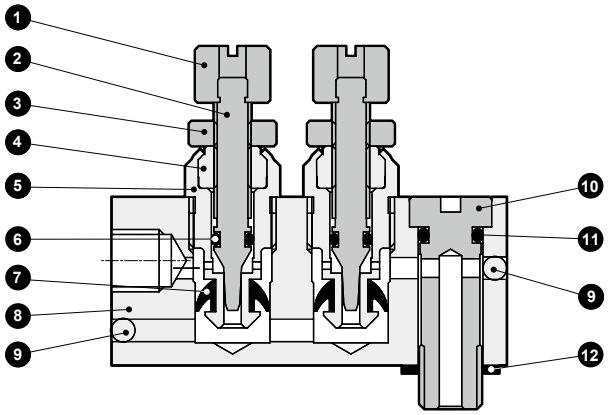

No.	Part name	Material
1	Knob	Aluminum alloy
2	Needle	Stainless steel
3	Lock nut	Aluminum alloy
4	Needle guide	Aluminum alloy (Stainless steel for fine speed)
5	Check bracket	Aluminum alloy
6	O-ring	Nitrile rubber
7	Packing	Hydrogenated nitrile rubber
8	Body	Aluminum alloy
9	Steel ball	Stainless steel
10	Bolt	Copper alloy
11	O-ring	Nitrile rubber
12	Gasket	Steel + nitrile rubber

*1: For the outside of handle, one side is painted with black.
(For adjustable, black indicates meter-in)
*2: The materials are the same for the straight (without ❿⓫⓬).
*3: Copper alloy parts have electroless nickel plating.

Dimensions

● SCD-M3-S (straight)

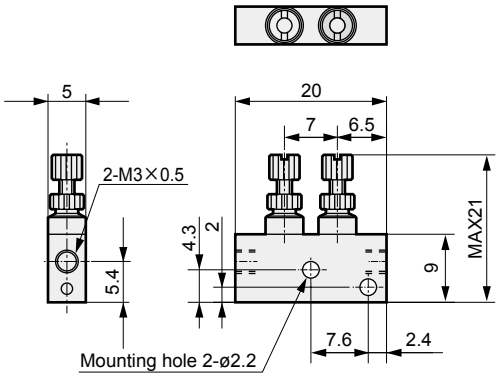

● SCD-M3-A (adjustable)

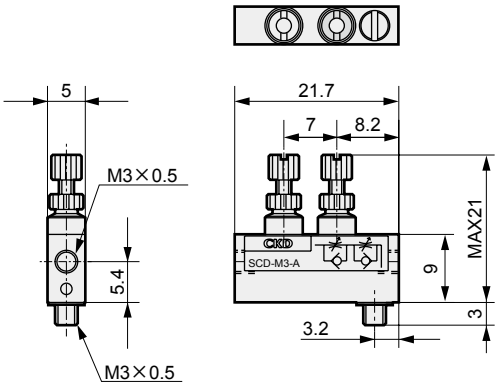

● SCD-M5-S (straight)

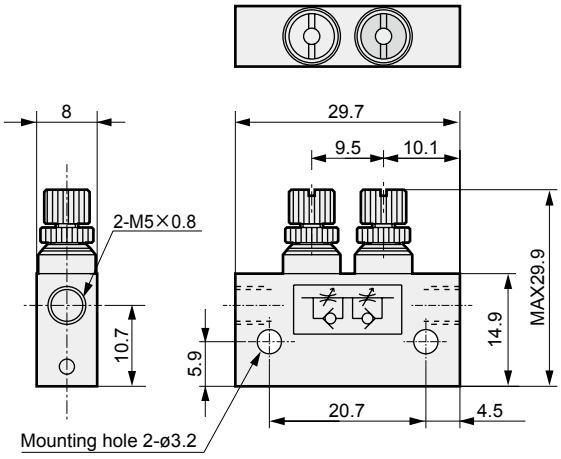

● SCD-M5-A (adjustable)

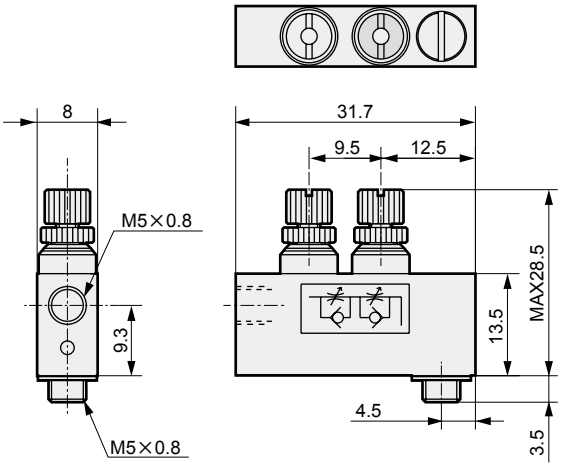

LCM
LCR
LCG
LCW
LCX
STM
STG
STS/STL
STR2
UCA2
ULK*
JSK/M2
JSG
JSC3/JSC4
USSD
UFCD
USC
UB
JSB3
LMB
LML
HCM
HCA
LBC
CAC4
UCAC2
CAC-N
UCAC-N
RCS2
RCC2
PCC
SHC
MCP
GLC
MFC
BBS
RRC
GRC
RV3*
NHS
HRL
LN
Hand
Chuk
MecHnd/Chuk
ShkAbs
FJ
FK
SpdContr
Ending

Applications

1 Speed is stabilized by controlling with an in/out speed controller.

[Example 1] In low-speed control with a single rod cylinder, the cylinder pops out immediately after the PUSH side operates if a meter-out circuit is used.

[Example 2] When vertically mounted, the cylinder pops out immediately after actuation because of the load weight.

Speed is stabilized by using a meter in/out circuit.

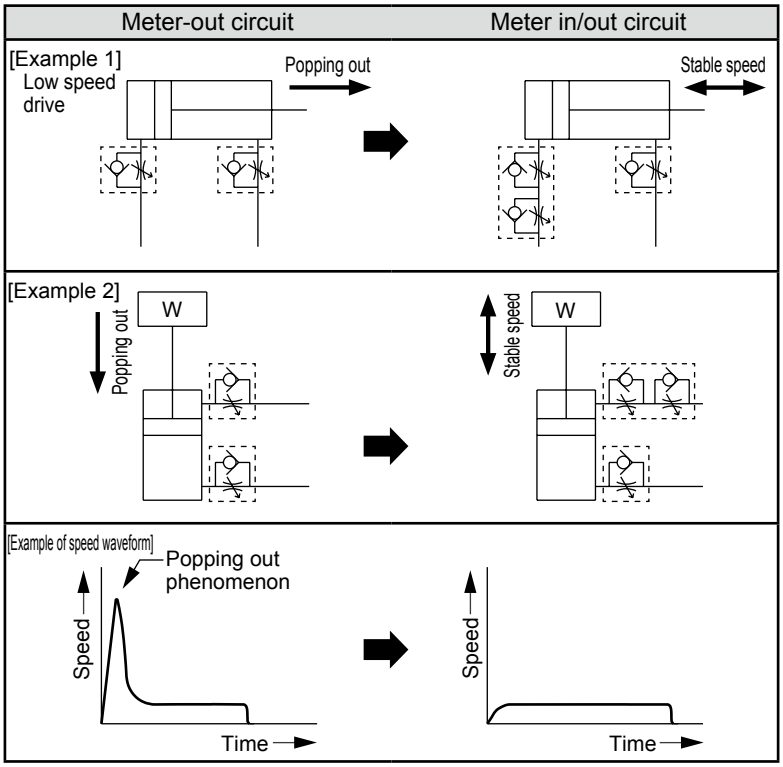

[Cause of popping out phenomenon]

When using the meter-out circuit, flow on the exhaust side is restricted, so both sides reach the same pressure immediately after the valve is switched. The thrust equivalent to the difference in the piston's pressurized area or the thrust equivalent to the load's weight causes popping out. When the piston moves, exhaust pressure rises, speed decelerates, and the set speed is reached.

If popping out is caused by this phenomenon, fluctuation in sudden thrust is suppressed by restricting the flow on the supply side, and popping out is resolved.

2 Danger can be prevented by suppressing popping out at the beginning of movement after residual pressure is released.

3 Reciprocating speed control is possible with a single acting cylinder.

4 The flow rate of the air operated valve and drip prevention valve can be finely adjusted.

MEMO

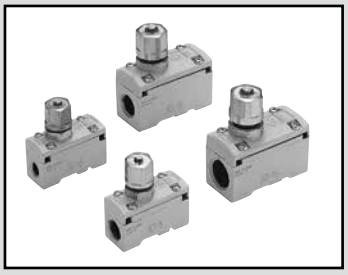

Speed controller medium bore size

SC1 Series

● Port size: Rc1/8 to Rc1/2

JIS symbol

RoHS CAD

Specifications

Item		SC1-6	SC1-8	SC1-10	SC1-15
Working fluid		Compressed air			
Max. working pressure MPa		1.0 (≈150 psi, 10 bar)			
Min. working pressure MPa		0.05 (≈7.3 psi, 0.5 bar)			
Proof pressure MPa		1.5 (≈220 psi, 15 bar)			
Fluid temperature °C		5 (41°F) to 60 (140°F) (no freezing *2) (5°C (41°F) to 120°C (248°F) for heat-resistant/ozone-proof specifications)			
Ambient temperature °C		0 (32°F) to 60 (140°F) (no freezing) (5°C (41°F) to 120°C (248°F) for heat-resistant/ozone-proof specifications)			
Port size Rc		1/8	1/4	3/8	1/2
Weight g		100	95	205	195
Cylinder bore size mm		ø20 to ø50	ø32 to ø75	ø50 to ø140	ø80 to ø160
Dial value (needle position)		10	10	10	10
Free flow	Flow rate ℓ/min(ANR)	730	930	2600	2900
	Eff. X-sectional area mm^2	11	14	39	43
Controlled flow	Flow rate ℓ/min(ANR)	530	870	1500	2400
	Eff. X-sectional area mm^2	8	13	22	36

*1: Flow rate is the atmospheric pressure conversion at 0.5 MPa.
*2: Freezing may occur due to adiabatic expansion depending on the air quality (dew point).

How to order

SC1 — 6 — X1

Ⓐ Port size

Ⓑ Option

Code	Description
Ⓐ Port size	
6	Rc1/8
8	Rc1/4
10	Rc3/8
15	Rc1/2
Ⓑ Option 1	
Blank	No option
X1	Heat resistance (120°C or less)/ozone-proof specifications
P6	Copper and PTFE free specifications

Flow characteristics

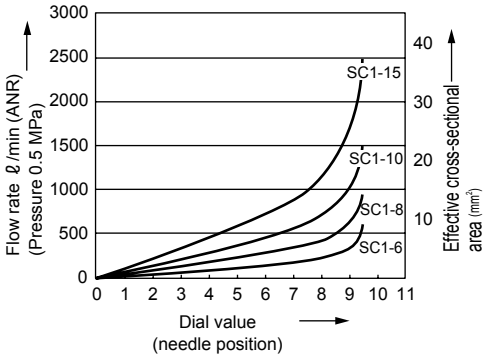

Clean-room specifications (Catalog No. CB-033SA)

● Anti-dust generation structure for use in cleanrooms

SC1 — ····· — P7*

LCM
LCR
LCG
LCW
LCX
STM
STG
STS/STL
STR2
UCA2
ULK*
JSK/M2
JSG
JSC3/JSC4
USSD
UFCD
USC
UB
JSB3
LMB
LML
HCM
HCA
LBC
CAC4
UCAC2
CAC-N
UCAC-N
RCS2
RCC2
PCC
SHC
MCP
GLC
MFC
BBS
RRC
GRC
RV3*
NHS
HRL
LN
Hand
Chuk
MecHnd/Chuk
ShkAbs
FJ
FK
SpdContr
Ending

Internal structure and parts list

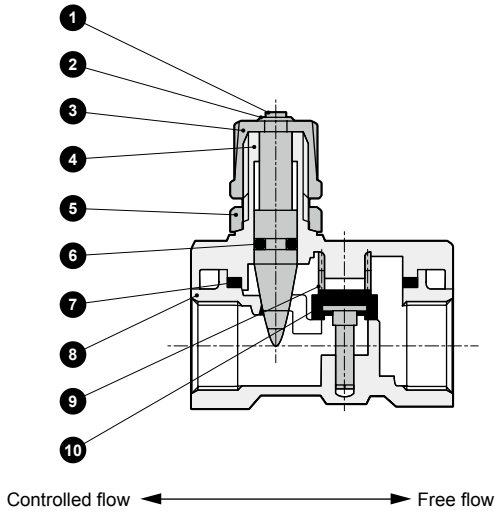

No.	Part name	Material
1	Needle	Copper alloy
2	E type snap ring	Steel
3	Knob	Zinc die-casting
4	Needle guide	Aluminum die-casting
5	Lock nut	Zinc die-casting
6	O-ring	Nitrile rubber (fluoro rubber)
7	Gasket	Nitrile rubber (fluoro rubber)
8	Body	Aluminum die-casting
9	Spring	Stainless steel
10	Valve seat	Copper alloy/nitrile rubber (copper alloy/fluoro rubber)

*1: ( ): Heat resistance/ozone-proof specifications

Dimensions

CAD

● SC1

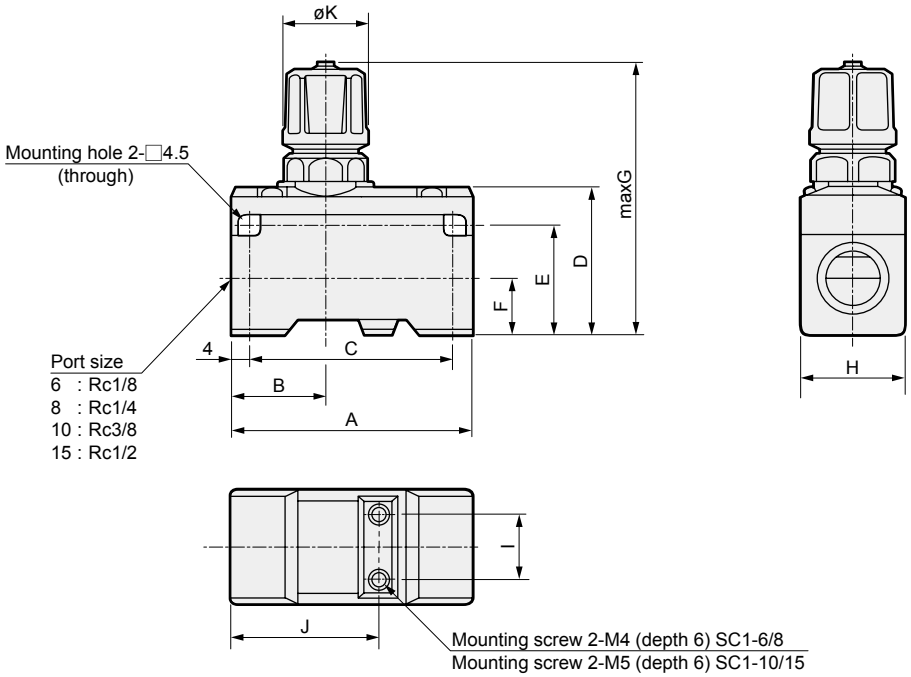

Model No.	A	B	C	D	E	F	G	H	I	J	K
SC1-6/8	50	20	42	31	23	11	67	22	12	31	19
SC1-10/15	63	21	55	40	31	15	83	30	18	37	23

⚠ Safety precautions

● When operating in the low pressure range (0.05 MPa or less), or when the piping, etc., before and after the product are excessively constricted, note that vibrating sounds can be easily generated if the cylinder speed is rapid, or if the differential pressure is small.

● When tightening, do not tighten the needle or lock nut section excessively.
(Tightening torque approx. 3 N·m)

Speed controller large bore size

SC Series

● Port size: Rc3/4 to Rc2

JIS symbol

RoHS CAD

Specifications

Item		SC-20A	SC-25A	SC-32A	SC-40A	SC-50A
Working fluid		Compressed air				
Max. working pressure MPa		1.0 (≈150 psi, 10 bar)		0.7 (≈100 psi, 7 bar)		
Min. working pressure MPa		0.05 (≈7.3 psi, 0.5 bar)		0.05 (≈7.3 psi, 0.5 bar)		
Proof pressure MPa		1.5 (≈220 psi, 15 bar)		1.05 (≈150 psi, 10.5 bar)		
Fluid temperature °C		5 (41°F) to 60 (140°F) (no freezing) *2				
Ambient temperature °C		0 (32°F) to 60 (140°F) (no freezing)				
Port size Rc		3/4	1	1 1/4	1 1/2	2
Weight kg		0.5	0.9	4.0	4.0	4.0
Cylinder bore size mm		ø100 to ø200	ø140 to ø250	ø300 to ø450	ø300 to ø450	ø450 to
Dial value (needle position)		10	10	10	10	10
Mounting orientation		The handle (nut) for flow control must be installed vertically facing upward or downward.				
Free flow	Flow rate ℓ/min(ANR)	10300	17400	68000	68000	97000
	Eff. X-sectional area mm^2	155	260	1000	1000	1500
Controlled flow	Flow rate ℓ/min(ANR)	8300	18700	68000	68000	91000
	Eff. X-sectional area mm^2	125	280	1000	1000	1400

*1: Flow rate is the atmospheric pressure conversion at 0.5 MPa.
*2: Freezing may occur due to adiabatic expansion depending on the air quality (dew point).

How to order

SC – **20A**

Ⓐ Port size

Code	Description
Ⓐ Port size	
20A	Rc3/4
25A	Rc1
32A	Rc1 1/4
40A	Rc1 1/2
50A	Rc2

Flow characteristics

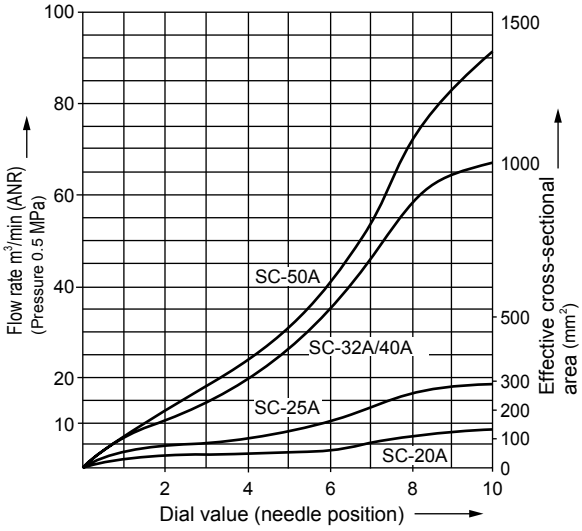

Internal structure and parts list

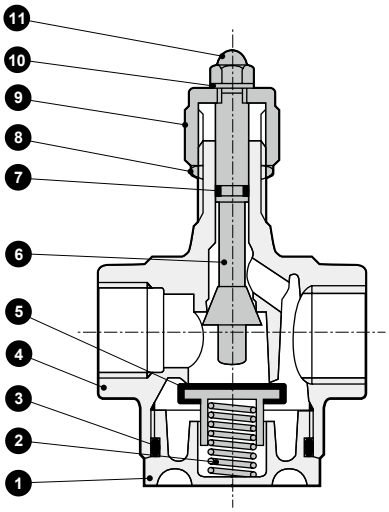

No.	Part name	Material
1	Cap	Aluminum die-casting
2	Spring	Stainless steel
3	O-ring	Nitrile rubber
4	Body	Aluminum die-casting
5	Valve seat	Copper alloy/nitrile rubber
6	Rod	Copper alloy
7	O-ring	Nitrile rubber
8	Nut	Carbon steel or copper alloy
9	Nut	Aluminum die-casting
10	Internal star washer	Stainless steel
11	Cap nut	Steel

Dimensions

● SC-20A

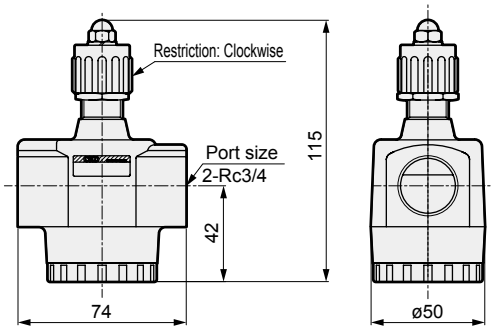

● SC-25A

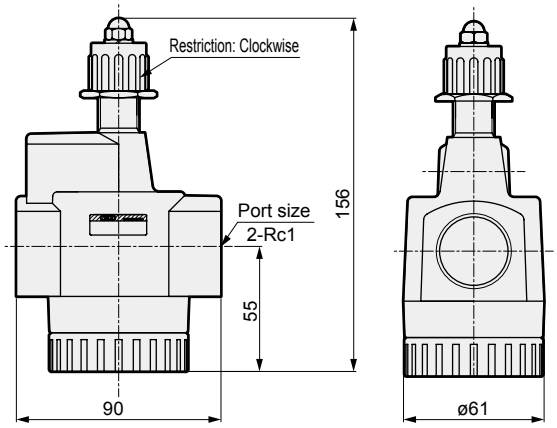

● SC-32 / 40 / 50 A

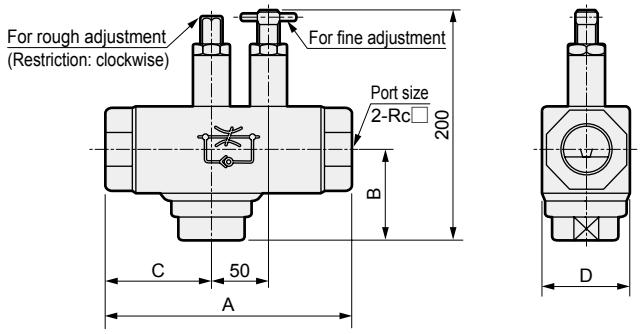

Model No.	A	B	C	D	Port size
SC-32A	210	77	92	75	Rc1 1/4
SC-40A	210	77	92	75	Rc1 1/2
SC-50A	222	79	96	84	Rc2

⚠ Safety precautions

When connecting the SC Series, do not tighten the product with a torque greater than what is listed on the right.

- When operating in the low pressure range (0.05 MPa or less), or when the piping, etc., before and after the product are excessively constricted, note that vibrating sounds can be easily generated if the cylinder speed is rapid, or if the differential pressure is small.
- When tightening, do not tighten the needle or lock nut section excessively. (Tightening torque approx. 3 N·m)

Port thread	Tightening torque N·m
Rc3/4	51
Rc1	70
Rc1 1/4	80
Rc1 1/2	85
Rc2	120

Speed controller Medium bore size Outdoor Series

SC1-W Series

● Port size: Rc1/4 to Rc1/2

JIS symbol

RoHS

Specifications

1 MPa ≈ 145.0 psi, 1 MPa = 10 bar

Item		SC1-8-W	SC1-10-W	SC1-15-W
Working fluid		Compressed air		
Max. working pressure MPa		1.0 (≈145 psi, 10 bar)		
Min. working pressure MPa		0.05 (≈8 psi, 1 bar)		
Proof pressure MPa		1.5 (≈217 psi, 15 bar)		
Fluid temperature °C		5 (41°F) to 60 (140°F)		
Ambient temperature °C		-10 (14°F) to 60 (140°F) (no freezing)		
Port size Rc		1/4	3/8	1/2
Weight g		95	205	195
Cylinder bore size mm		ø32 to ø75	ø50 to ø140	ø80 to ø160
Dial value (needle position)		10	10	10
Free flow	Flow rate ℓ/min (ANR)	930	2600	2900
	Effective cross-sectional area mm²	14	39	43
Controlled flow	Flow rate ℓ/min (ANR)	870	1500	2400
	Effective cross-sectional area mm²	13	22	36

*1: Flow rate is the atmospheric pressure conversion at 0.5 MPa.

How to order

SC1 - 8 - W

Ⓐ Port size

Code	Description
Ⓐ Port size	
8	Rc1/4
10	Rc3/8
15	Rc1/2

Flow characteristics

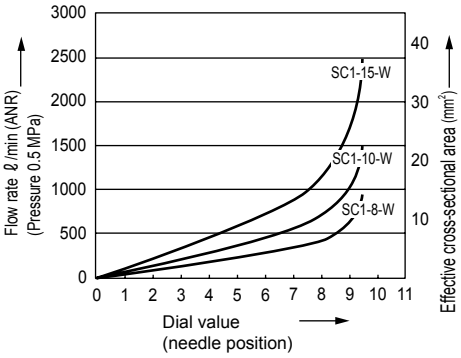

Internal structure and parts list

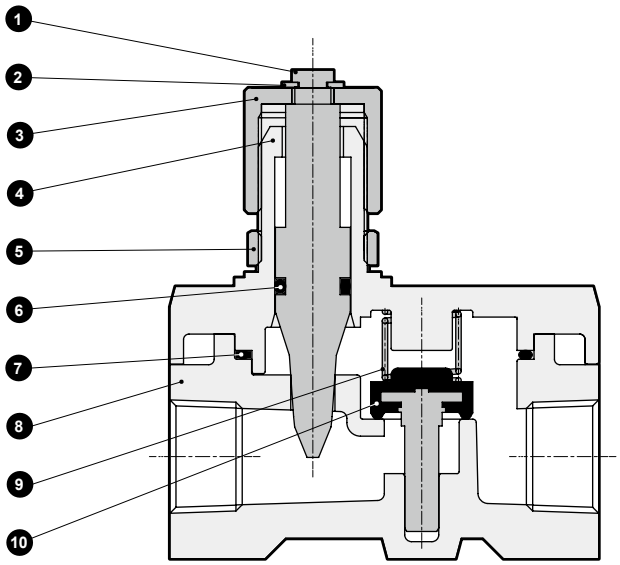

No.	Part name	Material
1	Needle	Stainless steel
2	E type snap ring	Stainless steel
3	Knob	Aluminum
4	Needle guide	Aluminum alloy die-casting
5	Lock nut	Stainless steel
6	O-ring	Fluoro rubber
7	Gasket	Fluoro rubber
8	Body	Aluminum alloy die-casting
9	Spring	Stainless steel
10	Valve seat	Copper alloy/fluoro rubber

LCM
LCR
LCG
LCW
LCX
STM
STG
STS/STL
STR2
UCA2
ULK*
JSK/M2
JSG
JSC3/JSC4
USSD
UFCD
USC
UB
JSB3
LMB
LML
HCM
HCA
LBC
CAC4
UCAC2
CAC-N
UCAC-N
RCS2
RCC2
PCC
SHC
MCP
GLC
MFC
BBS
RRC
GRC
RV3*
NHS
HRL
LN
Hand
Chuk
MecHnd/Chuk
ShkAbs
FJ
FK
SpdContr
Ending

Dimensions

● SC1-W

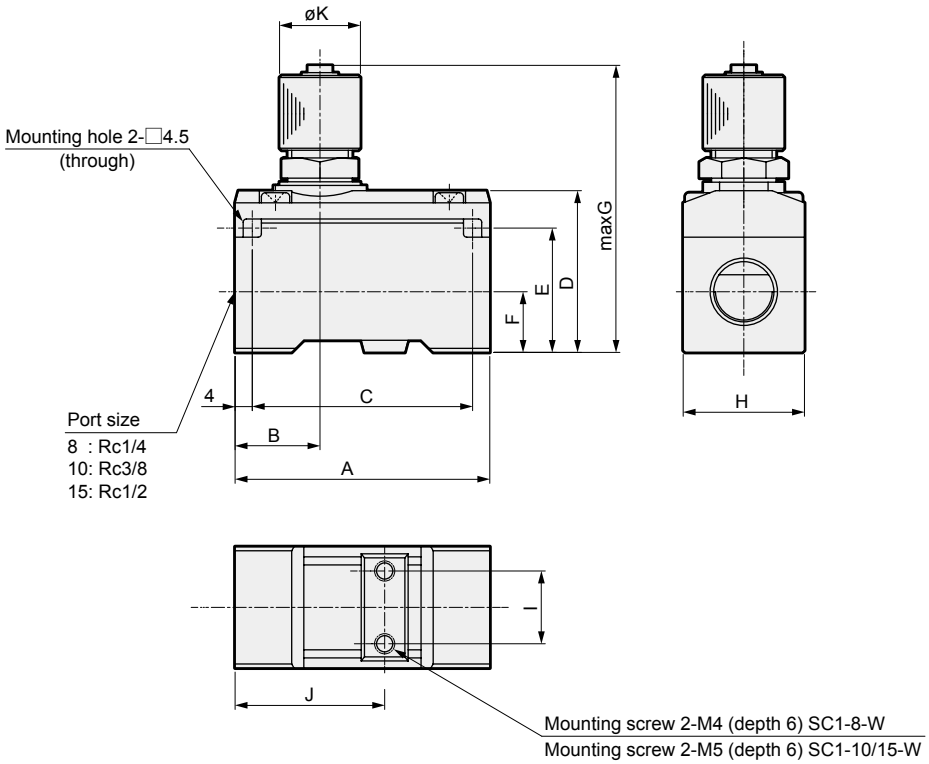

Model No.	A	B	C	D	E	F	G	H	I	J	K
SC1-8-W	50	20	42	31	23	11	67	22	12	31	19
SC1-10/15-W	63	21	55	40	31	15	83	30	18	37	23

Safety precautions

■ Design/selection

⚠ WARNING

● This product is for industrial use. Do not use for medical purposes, or in any equipment or circuit that concerns human life.

■ Working environment

● This product has outdoor specifications, but should not be used in the following environments.
- When the ambient temperature and product temperature exceed the range of -10 to 60°C.(The product temperature is at risk of exceeding the ambient temperature when exposed to direct sunlight.)
- Where air freezes.
- In atmospheres containing corrosive gases, liquids and chemicals.
- Locations with vibration or impact.

⚠ CAUTION

● When operating in the low pressure range (0.05 MPa or less), or when the piping, etc., before and after the product is excessively constricted, note that vibrating sounds can be easily generated at fast cylinder speeds or low differential pressure.

■ Working fluids

● Use only compressed air. Air containing corrosive gases, fluids, or chemicals could result in body damage or rubber deterioration.

■ Others

● This product is guaranteed for outdoor use, but not corrosion resistance (no rust or discoloration).

■ Mounting, installation and adjustment

⚠ CAUTION

● When tightening, do not tighten the needle or lock nut section excessively.
(Tightening torque approx. 3 N·m)

■ Use/maintenance

⚠ WARNING

● Do not disassemble.

⚠ CAUTION

● Do not apply a load to the product outside the parameters of use.
(Do not climb/step onto the product.)

Pneumatic components (speed controller)

Safety Precautions

Be sure to read this section before use.
Refer to "Pneumatic, Vacuum and Auxiliary Components (No. CB-024SA)" for general precautions, and to "⚠Safety precautions" in this section for details on each series.

Design/selection

⚠WARNING

■ Do not constantly push down or apply a load onto the push ring for the push-in fitting.
- The tube may lose its holding capacity.
- When transporting an assembled product, avoid positions which constantly press down on the push ring.

⚠CAUTION

■ Use the product in the range of conditions specified for the product.
Consult with CKD when using the product for special applications.
- Use of the product exceeding the specifications range may result in insufficient performance, and safety cannot be guaranteed.
- This product may not be usable in special applications and environments.
For example, use for applications requiring safety, including nuclear energy, railways, aircraft, vehicles, medical devices, devices in contact with beverages or foodstuffs, amusement devices, emergency cutoff circuits, press machines, brake circuits, or safety devices or applications.

■ Confirm before use that the product will withstand the working environment.
- Cannot be used in environments where its functions will be impeded.
Such environments include high temperatures, chemical atmospheres, or where chemical liquids, vibration, moisture, water dripping or gas is present. Environments where ozone is generated.
- Do not use the product in a place where it could come in direct contact with coolant or spatter, etc.

■ Understand the characteristics of compressed air before designing a pneumatic circuit.
- The same functions as the mechanical, hydraulic, and electrical methods cannot be anticipated if instantaneous stopping and holding are required during an emergency stop.
- Pop-out, air discharge, or leakage due to air compression and expansion may occur.

■ This valve cannot be used as a stop valve that requires no leakage. Slight leakage is allowed for in this product's specifications.

■ Install a "pressure switch" and "residual pressure exhaust valve" on the device's compressed air supply side.
- The pressure switch will disable operation until the set pressure is reached. The residual pressure exhaust valve releases compressed air into the pneumatic pressure circuit to prevent accidents caused by operation of pneumatic components under residual pressure.

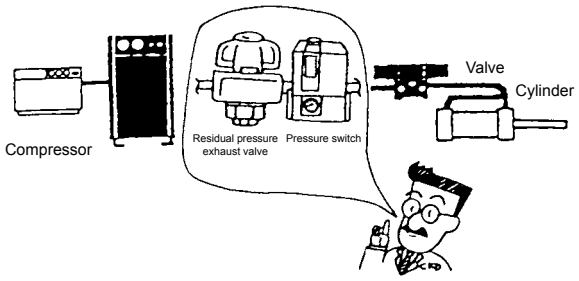

■ Confirm whether PTFE can be used.
The sealant contains PTFE (polytetrafluoroethylene resin) powder. Check that this poses no problem during use.

■ Indicate the maintenance conditions in the device's instruction manual.
- The product's performance may drop too low to maintain an appropriate safety level depending on usage conditions, working environment and maintenance status. With correct maintenance, the product functions can be used to the fullest.

■ Consult with CKD if ozone is generated in the supplied air. (Ozone-proof products are available.)

■ Rubber parts deteriorate and service life is shortened if ultra dry air is used.

Mounting, installation and adjustment

Piping

⚠CAUTION

■ Do not remove the package or seal cap on the piping port until just before piping the product.
- Removing the piping port cap before piping work may cause foreign matter to enter the pneumatic components from the piping port, resulting in failure or malfunction.

■ When connecting pipes, wrap sealing tape in the opposite direction from the threading, from the inside position to within 2 mm from the pipe end.
- If sealing tape protrudes from the pipe threads, it could be cut when screwing the bolts in. This could cause the tape to enter the pneumatic components, causing failures.

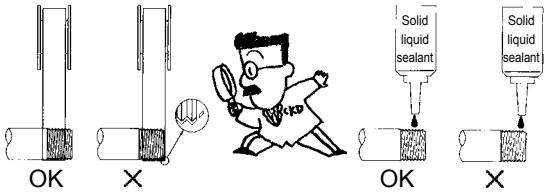

■ M3 and M5 screws are sealed with gaskets.

■ Handling push-in fittings and tubes
- For handling of push-in fittings and tubes, refer to Warnings and Cautions of fittings/tubes (General Pneumatic Auxiliary Components (No. CB-024SA)).

■ Always flush just before piping pneumatic components.
- Any foreign matter that has entered during piping must be removed so it does not enter the pneumatic components.

■ When supplying compressed air after connecting pipes, do not suddenly apply high pressure.
- The pipe connection could dislocate, causing the pipe tube to fly out, leading to accidents.

■ After connecting piping, always check all pipe connections for air leaks before supplying compressed air.
- Apply a leakage detection agent to pipe connections with a brush and check for air leaks.

■ Apply recommended tightening torque when connecting pipes.
- The purpose is to prevent air leakage and damage to bolts.
- First tighten the bolts by hand to ensure that the threads are not damaged, then use a tool.
- Do not tighten while pressure is applied.

[Recommended tightening torque]

Port thread	Tightening torque N·m
M3	0.3 to 0.6
M5	1.0 to 1.5
Rc1/8	3 to 5
Rc1/4	6 to 8
Rc3/8	13 to 15
Rc1/2	16 to 18
Rc3/4	19 to 40
Rc1	41 to 70

■ Connect piping so that connections are not dislocated by equipment movement, vibration, tension, etc.
- Control of actuator speed will be disabled if piping on the exhaust side of the pneumatic circuit is disengaged.
- When using the chuck holding mechanism, the chuck may be released, creating a hazardous state.

■ Around the pneumatic components, keep space for installation, removal and piping work.

■ Install a pneumatic filter just before the pneumatic component in the circuit.

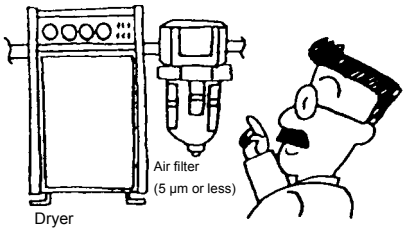

■ Check that lock nuts are not loose.
- Actuator speed cannot be controlled if the lock nut is loose.

■ Check the needle valve speed of rotation.
- The needle valve has dislocation prevention that could break if the needle is turned too far. Check the number of turns for the product used.

■ Confirm the flow direction.
- If installed in reverse, speed adjustment will not function and the actuator could pop out, creating a hazard.

■ Fully close the needle, and open to adjust speed.
- If the needle is opened, the actuator could suddenly and dangerously pop out. Ensure that it is closed and then open it.
- The needle closes when turned to the right and opens when turned to the left.

■ Avoid using the product for applications that involve continuous rotation or oscillations.
● Fittings could be damaged.

■ Avoid use in areas with large vibration or impact.

Use/maintenance

⚠ WARNING

■ Stop air flow and confirm that there is no residual pressure before replacing the tube.

Cylinder switch guide

CONTENTS

Cylinder switch variation table	Ending	2
Cylinder with switch variation table	Ending	4
⚠ Safety precautions	Intro	71
Proximity cylinder switch with 2-color LED	Ending	8
Strong magnetic field proof cylinder switch	Ending	9
● M Series	Ending	12
● R Series	Ending	14
● T Series	Ending	16
● K Series	Ending	20
● F Series	Ending	22
● H Series	Ending	24
● V Series	Ending	25
● E Series	Ending	26
● Contact protecting circuit box	Ending	27
● Cylinder switch with connector	Ending	28
Series option	Ending	30
Operational principle, switch installation position	Ending	31
Operating range and hysteresis of each cylinder with switch	Ending	32
Relocation of switch	Ending	42
How to install the product to terminal box	Ending	44
Selection chart	Ending	45
Troubleshooting	Ending	46

The cylinder switches T2YH, T2YV, T3YH, and T3YV are scheduled for end of production at the end of December 2023.

Discrete switch model No.

Model No. of discrete switch unit is as below.

SW - Switch model No.

Straight lead wire (H) direction and L-shaped lead wire (V) direction are available.

Cylinder switch variation

CKD cylinders with switches cover wide applications with miniature to large cylinders and rotary actuators. Refer to the variation table below to select the ideal product.

Proximity switch																																	Descriptions
M Series				R Series					T Series												K Series					F Series							
M2	M2WV	M3	M3WV	R1	R2	R2Y	R3	R3Y	T1	T2	T2J	T2Y	T2W	T2YL	T3	T3P	T3Y	T3W	T3YL	T2YD	K2	K2Y	K3	K3P	K3Y	F2	F2Y	F2S	F3	F3Y	F3P	F3S	
●	●	●	●	●	●	●	●	●	●	●	●	●	●	●	●	●	●	●	●	●	●	●	●	●	●	●	●	●	●	●	●	●	Grommet
				●	●	●	●	●																									Terminal box
●	●			●	●	●			●	●	●	●	●	●						●	●	●				●	●	●					2-wire
		●	●				●	●							●	●	●	●	●				●	●	●				●	●	●	●	3-wire
●	●*1	●	●*1	●	●	●*1	●	●*1	●	●	●	●*1	●*1	●*1	●	●*2	●*1	●*1	●*1	●*1	●	●*1	●	●*2	●*1	●*2	●*1	●	●*2	●*1	●*1	●	LED (Lit when ON)
																																	Neon light (Lit when OFF)
																																	No indicator lamp
	●		●			●		●				●	●	●			●	●	●	●		●			●		●			●			2-color LED
		●					●	●																									5 VDC
●	●				●	●				●	●	●	●	●						●	●	●				●	●	●					10 VDC to 30 VDC
		●	●				●	●							●	●	●	●	●				●	●	●				●	●	●	●	30 VDC or less
				●					●																								100 VAC
				●					●																								200 VAC
●	●	●	●	●	●	●	●	●	●	●	●	●	●	●	●	●	●	●	●	●	●	●	●	●	●	●	●	●	●	●	●	●	Programmable controller
		●	●	●			●	●									●	●	●				●	●	●				●	●	●	●	IC circuit
		●	●	●			●	●	●								●	●	●				●	●	●				●	●	●	●	Compact relay, valve
																																	Large relay, valve

*1: LEDs are red/green.
*2: LEDs are yellow.
*3: LEDs are green.
*4: LEDs other than those in *1 to *3 are red.

Descriptions		Reed switch																
		M Series		R Series				T Series			K Series		F Series	H Series		E Series		V Series
		M0	M5	R0	R4	R5	R6	T0	T5	T8	K0	K5	F0	H0	H0Y	E0	ET0	V0
Connection	Grommet	●	●	●	●	●	●	●	●	●	●	●	●	●	●		●	●
	Terminal box			●	●	●	●									●		
Number of connections	2-wire	●	●	●	●	●	●	●	●	●	●	●	●	●	●	●	●	●
	3-wire																	
With indicator lamp	LED (Lit when ON)	●		●			●	●		●	●		● *2	● *3	● *1	●	● *2	●
	Neon light (Lit when OFF)				●													
	No indicator lamp		●			●			●			●						
	2-color LED														●			
Working voltage	5 VDC		●			●			●			●						
	10 VDC to 30 VDC														●			●
	30 VDC or less	●	●	●		●	●	●	●	●	●	●	●	●		●	●	
	100 VAC	●	●	●	●	●		●	●	●	●	●		●		●	●	●
	200 VAC			●	●	●				●						●		
Applications	Programmable controller	●	●	●		●	●	●	●	●	●	●	●	●	●	●	●	●
	IC circuit		●			●			●			●						
	Compact relay, valve	●	●	●		●		●	●	●	●	●		●		●	●	●
	Large relay, valve				●													

Cylinder with switch variations

CKD cylinders with switches cover wide applications with miniature to large cylinders and rotary actuators. Refer to the variation table below to select the ideal product.

Proximity switch																																		
F Series							M Series					R Series					T Series												K Series					
F2	F2Y	F2S	F3	F3Y	F3P	F3S	M2	M2WV	M3	M3P	M3WV	R1	R2	R2Y	R3	R3Y	T1	T2	T2J	T2W	T2Y	T2YL	T3	T3P	T3W	T3Y	T3YL	T2YD	K2	K2Y	K3	K3P	K3Y
																		●		●			●	●	●								
																	●	●	●	●	●	▲	●	●	●	●	▲						
																	●	●	●	●	●		●	●	●	●	▲						
																	●	●	●	●	●		●	●	●	●	▲	●					
																	●	●	●	●	●	▲	●	●	●	●	▲	●					
																	●	●	●	●	●	▲	●	●	●	●	▲	●					
																	●	●	●	●	●		●	●	●	●		●					
																	●	●	●	●	●		●	●	●	●		●					
																	●	●	●	●	●		●	●	●	●							
																	●	●	●	●	●		●	●	●	●							
● *7	● *7	● *7	● *7	● *7	● *7	● *7											● *3	●	●	●	●	▲	●	●	●	●	▲	●					
● *7	● *7	● *7	● *7	● *7	● *7	● *7											● *3	●	●	●	●		●	●	●	●		●					
																	● *6	●	● *6	●	● *6	▲	●	●	●	● *6	▲	● *3					
●	●	●	●	●	●	●																												
●	●	●	●	●	●	●																												
																													●	●	●	●	●
●	●	●	●	●	●	●																												
●	●	●	●	●	●	●																												
							● *8	●	● *8	● *8	●																							
																	●	●	●	●	●		●	●	●	●								
							● *8	●	● *8	● *8	●																							
																	●	●	●	●	●		●	●	●	●								
																	●	●	●	●	●		●	●	●	●								
																	●	●	●	●	●		●	●	●	●								
																	●	●	●	●	●		●	●	●	●		●						
																	●	●	●	●	●		●	●	●	●		●						
																	●	●	●	●	●		●	●	●	●		●						
																	●	●	●	●	●		●	●	●	●		●						
							● *8	●	● *8	● *8	●																							
																	●	●	●	●	●		●	●	●	●		●						

*1: Including made-to-order products
*2: ▲ is mountable depending on variation. H type (L2), Coolant proof (G2/G3), etc.
*3: Excluding ø16 or less
*4: Excluding ø12, ø16, position locking all bore sizes
*5: Excluding ø40 or less
*6: ø12 and ø16 of standard, X, Y, O, F, B, W and M are L1

Cylinder model		Bore size	Mounting method			Compatibility with body	Reed switch															
							M Series		R Series				T Series			K Series		F Series	H Series		E Series	
			Band	Tie rod	Rail		M0	M5	R0	R4	R5	R6	T0	T5	T8	K0	K5	F0	H0	H0Y	E0	ET0
Pencil shaped cylinder	SCP*3	ø6 to ø16	●										●	●								
Medium bore size cylinder	CMK2	ø20 to ø40	●			Magnet provided as standard							●	●	●							
Medium bore size cylinder	CMA2	ø20 to ø40	●			Magnet provided as standard							●	●	●							
Round shaped cylinder	SCM	ø20 to ø100	●		●	Magnet provided as standard							●	●	●*5							
Global cylinder Tie rod cylinder	SCG	ø40 to ø100		●		Magnet provided as standard							●	●	●							
Medium bore size cylinder	SCA2	ø40 to ø100		●		Magnet provided as standard							●	●	●				▲	▲	▲	
Large bore size cylinder with valve	SCA2-V	ø40 to ø100		●		Magnet provided as standard							●	●								
Large bore size cylinder	SCS2	ø125 to ø250		●									●	●	●							
Small cylinder with valve	CKV2	ø20 to ø40	●			Magnet provided as standard							●	●	●							
Cylinder with valve	CAV2 COV2	ø50 to ø100		●		Magnet provided as standard							●	●	●							
Compact cylinder	SSD2	ø12 to ø200			●								●	●	●*9							▲
Guided super compact cylinder	SSG	ø12 to ø100			●								●	●	●*10							
Compact cylinder	SSD	ø12 to ø160			●								●	●	●*9							▲
Small direct mounting cylinder	MDC2	ø4 to ø10			●													●				
Small cylinder with suction pad	MVC	ø6, ø10			●	Magnet provided as standard												●				
Compact cylinder	SMG	ø6 to ø32			●											●	●					
Small compact cylinder	MSD	ø6 to ø16			●													●				
Small guided compact cylinder	MSDG	ø6 to ø16			●													●				
Flat compact cylinder	FC*	ø25 to ø63			●		●*8	●*8														
Stopper cylinder	STK	ø20 to ø50			●	Magnet provided as standard							●	●	●							
Brake cylinder	ULKP	ø16	●				●*8	●*8														
Brake cylinder	ULK	ø20 to ø40	●			Magnet provided as standard							●	●	●							
Brake cylinder	JSK2	ø20 to ø40	●			Magnet provided as standard							●	●	●							
Brake cylinder	JSM2	ø20 to ø40	●			Magnet provided as standard							●	●	●							
Tie rod cylinder with brake	JSG	ø40 to ø100		●		Magnet provided as standard							●	●	●							
Brake cylinder medium bore size	JSC3	ø40 to ø100		●		Magnet provided as standard							●	●	●				▲	▲		
Brake cylinder large bore size	JSC4	ø125 to ø180		●									●	●	●							
Position locking compact cylinder	USSD	ø40 to ø63			●								●	●	●							
Free position locking flat cylinder	UFCD	ø25 to ø63			●		●*8	●*8														
Free position locking Medium bore size cylinder	USC	ø40 to ø100		●		Magnet provided as standard							●	●	●				▲	▲		

*7: Mountable for ø20 and ø25 of SSD2. Mountable for ø25 of SSG
*8: Only V type (L-shaped lead wire) mountable
*9: Excluding ø12 to ø32 of L, XL, YL, OL, LF, BL, WL, ML, ø12 and ø16 of KL, DL, and ø16 of QL
*10: Excluding ø32 or less

Cylinder switch

Proximity switch																																	
F Series							M Series					R Series					T Series												K Series				
F2	F2Y	F2S	F3	F3Y	F3P	F3S	M2	M2WV	M3	M3P	M3WV	R1	R2	R2Y	R3	R3Y	T1	T2	T2J	T2Y	T2W	T2YL	T3	T3P	T3Y	T3W	T3YL	T2YD	K2	K2Y	K3	K3P	K3Y
● *10	● *10	● *10	● *10	● *10		● *10												● *11			● *11		● *11			● *11							
● *10	● *10	● *10	● *10	● *10	● *10	● *10												● *11			● *11		● *11	● *11		● *11							
● *10	● *10	● *10	● *10	● *10	● *10	● *10												● *11			● *11		● *11	● *11		● *11							
																		●			●		●	●		●							
●	●	●	●	●	●	●																											
●	●	●	●	●	●	●																											
																	●	●	●	●		▲	●	●	●		▲	●					
																	●	●	●	●		▲	●	●	●		▲	●					
																													●	●	●	●	●
																		●					●										
																	●	●	●	●	●		●	●	●	●		●					
												●	●	●	●	●																	
							●	●	●	●	●									●	●				●	●		●					
							●	●	●	●	●									●	●				●	●		●					
																				●	●				●	●		●					
							●	●	●	●	●									●	●				●	●		●					
																	●	●	●	●	●		●	●	●	●							
																	●	●	●	●	●		●	●	●	●							
																	●	●	●	●	●		●	●	●	●		●					
																	●	●	●	●	●		●	●	●	●		●					
																	●	●	●	●	●		●	●	●	●		●					
																	●	●	●	●	●		●	●	●	●		●					
● *7	● *7	● *7	● *7	● *7	● *7	● *7											● *3	●	● *3	● *3	●		●	●	● *3	●		● *2					
																		●	● *3	● *3	●		●	●	● *3	●		● *3					
												●	●		●																		
												●	●	●	●	●																	
																	●	●	●	●	●		●	●	●	●							
												●	●		●																		
																	●	●	●	●	●		●	●	●	●							
																	●	●	●	●	●		●	●	●	●							
							● *8		● *8	● *8																							

*1: Including made-to-order products
*2: ▲ is mountable depending on variation. H type (L2), Coolant proof (G2/G3), etc.
*3: Excluding ø16 or less
*4: Excluding ø12, ø16, position locking all bore sizes
*5: Excluding ø40 or less
*6: ø12 and ø16 of standard, X, Y, O, F, B, W and M are L1

Cylinder model		Bore size	Mounting method			Compatibility with body	Reed switch														
							M Series		R Series				T Series			K Series		F Series	H Series		E Series	
			Band	Tie rod	Rail		M0	M5	R0	R4	R5	R6	T0	T5	T8	K0	K5	F0	H0	H0Y	E0	ET0
Linear slide cylinder	LCW	ø12 to ø20			●	Magnet provided as standard							● *11	● *11								
Linear slide cylinder	LCR	ø6 to ø25			●	Magnet provided as standard							● *11	● *11								
Linear slide cylinder	LCG	ø6 to ø25			●	Magnet provided as standard							● *11	● *11								
Thin linear slide cylinder	LCX	ø25,ø32			●	Magnet provided as standard							●	●								
Linear slide cylinder	LCM	ø4.5 to ø8			●																	
Guided cylinder	STM	ø6 to ø10			●	Magnet provided as standard																
Global cylinder Guided cylinder	STG	ø12 to ø80			●	Magnet provided as standard							●	●	● *4							
Guided cylinder	STS/L	ø8 to ø100			●	Magnet provided as standard							●	●	● *3							
Twin rod cylinder	STR2	ø6 to ø32			●	Magnet provided as standard										●	●					
Unit cylinder	UCA2	ø10 to ø32			●								●	●								
High energy absorption cylinder	HCM	ø20 to ø63			●	Magnet provided as standard							●	●	●							
High speed cylinder	HCA	ø20 to ø100	●			Magnet provided as standard			●	●	●	●										
Rodless cylinder	SRL3	ø10 to ø100			●	Magnet provided as standard	●	●														
High precision guided rodless cylinder	SRG3	ø12 to ø25			●		●	●														
High precision guided rodless cylinder	SRM3	ø25 to ø40, 63			●								●	●	●							
Rodless cylinder with brake	SRT3	ø32 to ø63			●	Magnet provided as standard	●	●														
Magnet rodless cylinder	MRL2	ø6 to ø20			●																	
Magnet rodless cylinder with high precision guide	MRG2	ø10 to ø25			●	Magnet provided as standard							●	●								
Clamp cylinder	CAC4	ø40 to ø80		●		Magnet provided as standard							●	●	●				▲	▲		
Position locking clamp cylinder	UCAC2	ø50, ø63		●		Magnet provided as standard							●	●	●				▲	▲		
Lightweight clamp cylinder	CAC-N	ø32,ø40		●		Magnet provided as standard							●	●	●							
Position locking clamp cylinder	UCAC-N	ø50,ø63		●		Magnet provided as standard							●	●	●							
Rotary clamp cylinder	RCS2	ø12 to ø63			●	Magnet provided as standard							●	●	● *12							
Rotary clamp cylinder	RCC2	ø16 to ø63			●	Magnet provided as standard							●	●								
Robot cylinder	MFC	ø30 to ø80		●					●	●	●	●										
High power cylinder	SHC	ø40 to ø100		●		Magnet provided as standard			●	●	●	●							▲			
Mechanical power cylinder	MCP	For actual thrust 2 t, 5 t		●	●	Magnet provided as standard							●	●	●							
Guideless cylinder	GLC	ø40 to ø100		●		Magnet provided as standard			●	●	●	●							▲			
Rotary actuator	RRC	Size: 8, 32, 63			●	Magnet provided as standard							●	●	●							
Table rotary actuator	GRC	Size: 5 to 80			●	Magnet provided as standard																
Rotary actuator	RV3*	Size: 50 to 300					● *8	● *8														
Hand-chuck		Hand : Cylinders II P786-P789 Chuck: Cylinders II P956-P957				Reference																

*7: Mountable for ø20 and ø25.
*8: Only V type (L-shaped lead wire) mountable
*9: Excluding ø12 to ø32 of L, XL, YL, OL, LF, BL, WL, ML, ø12 and ø16 of KL, DL, and ø16 of QL
*10: Excluding ø16 and over
*11: Excluding ø12 or less
*12: Excluding ø12 and ø16

2-color LED proximity cylinder switch

Overview

Conventionally, the pneumatic cylinder position detection switch required installation and adjustment because of the operating range and hysteresis. With the 2-color LED proximity cylinder switch, the optimum installation position is instantly indicated by the green LED lighting at the optimum installation position, and the red LED lighting at the normal operating range. This eliminates the time and hassle required to adjust the switch and prevents setting errors, allowing high-reliability equipment to be configured.

● Light display

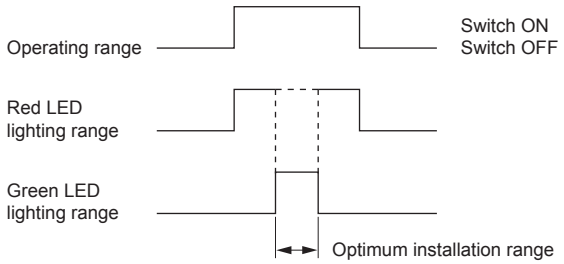

Features

● Easy installation and adjustment

Since the green LED lights at the optimal installation position, the switch can be installed and adjusted very easily.

● High reliability

The switch uses our original hybrid IC integrated magnetic resistance element, making it even more reliable.

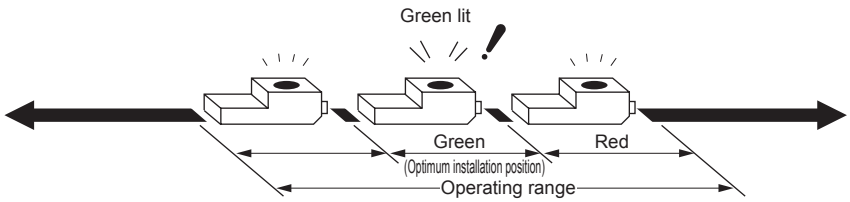

● Comparison of cylinder and switch setting

[Conventional] → [2-color LED switch]

(1) The switch is moved in one direction and the lighting start position is marked.

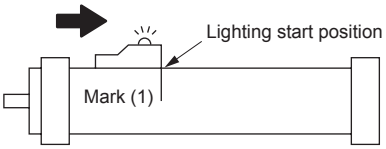

(1) The switch is moved in only one direction, and is fixed at the position where the green LED lights.

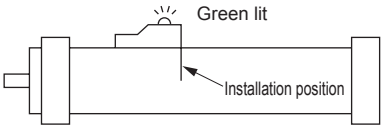

(2) In the same manner, the switch is moved from the other direction, and the lighting start position is marked.

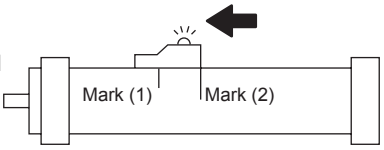

(3) The end of the switch is set and fixed at the center of the two marks.

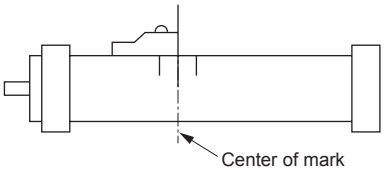

2-color LED switch is
(1) Quick to install
(2) Easy to install
(3) Free of setting errors

Strong magnetic field proof cylinder switch

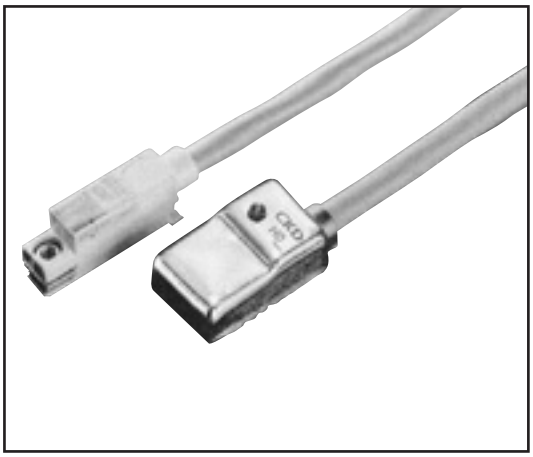

Overview

This cylinder switch is used in environments having strong magnetic fields, such as near spot welding machines and magnetizing units in automotive plants, etc.

Features

● Easy installation/position adjustment (V0, T2YD)
Uses the rail mounting method. Mountable with a single set screw, and with easy position adjustment.

● Heat resistant material
Metal (H0, H0Y) and self-extinguishing resin UL94-V0 (V0, T2YD) body, and flame-resistant lead wires (optional for T2YD) have been adopted. Prevents body and lead wire burning or welding due to spatter.

● No polarity (H0, T2YD, H0Y)
Integrated diode bridge eliminates polarity. Eliminates the time required for checking positive and negative polarity, preventing connection errors.

● 2-color LED for easy installation adjustment (T2YD, H0Y)
Since the green LED lights at the optimal installation position, the switch can be installed and adjusted very easily.

⚠CAUTION

(1) Spot welding current - malfunction distance characteristics
(For detection stroke 30 mm and over for V0 switch)

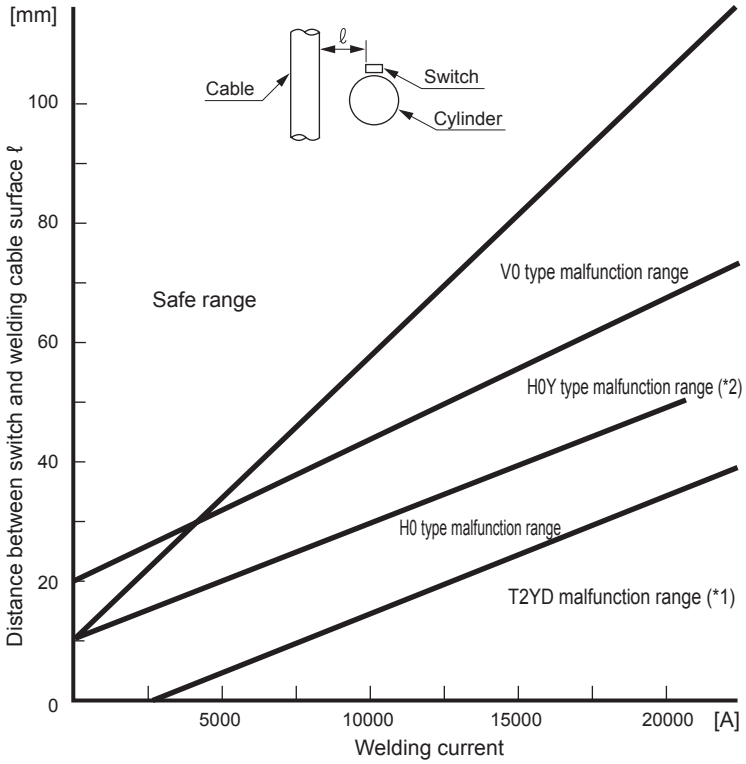

The above external magnetic field resistance properties apply when H0 is installed within the “max. sensitivity position ±1 mm,” within the “max. sensitivity position ±1.5 mm” for V0, and within the “optimum installation range” for H0Y. Install switches within this range. Do not apply welding current to flow during movement of the cylinder piston.
If 2 or more welding cables are energized simultaneously, the magnetic flux will increase due to the synergistic effect of the cables. Contact CKD before use. Note that the switch cannot be set within the cable loop.

*1: Indicates malfunction occurring when the cylinder piston magnet is degaussed by a welding field.
*2: Malfunction of H0Y indicates output malfunction.
*3: T2YD is a switch dedicated for AC magnetic field.

(2) SSD detection stroke - malfunction distance characteristics
(V0 switch)

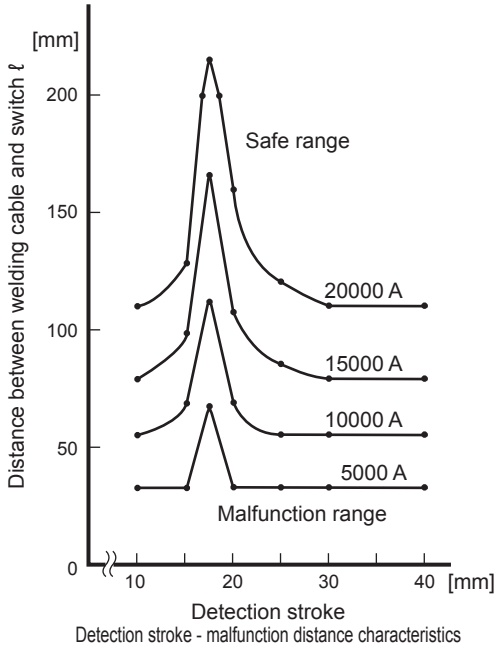

Detection stroke - malfunction distance characteristics

When using with the detection stroke set to 30 mm or less, provide the distance in the figure above between the welding cable and switch.

(3) H type cylinder switch
Magnetic performance near spot welding

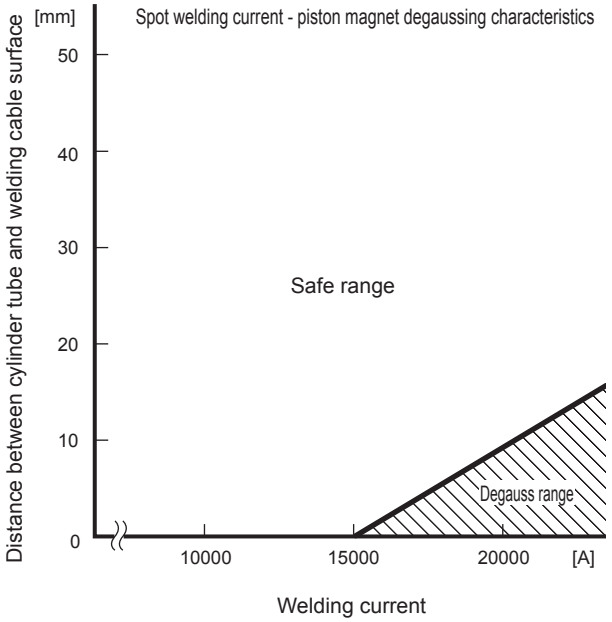

Degaussing occurs when an alternating current magnetic field is applied to the magnet. Measures have been taken for the cylinder with H-switch magnet. While degaussing does not occur up to 15,000 A, at over 15,000 A, provide the above distance between the cylinder tube and welding cable surfaces.

MEMO

M Series	Application cylinder	FC* RV3* SRL3 SRG3 SRT3 UFCD

M*V

M*H

Specifications

Descriptions	Proximity 2-wire		Proximity 3-wire		
	M2V/M2H	M2WV (2-color LED)	M3H/V (NPN output)	M3PH/V (PNP output)	M3WV (2-color LED)
Applications	Dedicated for programmable controller		For programmable controller, relay, IC circuit, compact solenoid valve		
Output method	-		NPN output	PNP output	NPN output
Power supply voltage	-		4.5 to 28 VDC		10 to 28 VDC
Load voltage	10 to 30 VDC		30 VDC or less		
Load current	5 to 30mA		100 mA or less		
Current consumption	-		10 mA or less with 24 VDC	10 mA or less with 24 VDC	15 mA or less with 24 VDC
Internal voltage drop	4 V or less		0.5 V or less		
Indicator lamp	Red LED (Lit when ON)	Red/green LED (Lit when ON)	Red LED(Lit when ON)	Yellow LED (Lit when ON)	Red/green LED (Lit when ON)
Leakage current	1 mA or less		10 μA or less	0.05 mA or less	10 μA or less
Lead wire length	1m (Oil resistant vinyl cabtyre cable 2-conductor 0.2mm^2)		1m (Oil resistant vinyl cabtyre cable 3-conductor 0.15mm^2)		
Shock resistance	980m/s^2				
Insulation resistance	100 MΩ and over with 500 VDC megger				
Withstand voltage	No failure after 1 minute of 1,000 VAC application.				
Ambient temperature	-10 to +60°C				
Degree of protection	IEC standards IP67, JIS C0920 (water tight)				
Weight	1 m: 22 g 3 m: 57 g 5 m: 93 g		1 m: 22 g 3 m: 57 g 5 m: 93 g		

Ending

Descriptions	Reed 2-wire			
	M0V/M0H		M5V/M5H	
Applications	For programmable controller, relay		For programmable controller, relay, IC circuit (no indicator lamp), serial connection	
Power supply voltage	-			
Load voltage	DC12/24V	110 VAC	DC5/12/24V	110 VAC
Load current	5 to 50mA	7 to 20mA	50 mA or less	20 mA or less
Current consumption	-			
Internal voltage drop	3 V or less (with 30mA load current for DC)		0.1V or less (*4)	
Indicator lamp	Red LED (Lit when ON)		No indicator lamp	
Leakage current	0mA			
Lead wire length	1 m (oil resistant vinyl cabtyre cable 2-conductor 0.2mm^2)			
Shock resistance	294 m/s^2			
Insulation resistance	100 MΩ and over with 500 VDC megger			
Withstand voltage	No failure after 1 minute of 1,000 VAC application.			
Ambient temperature	-10 to +60°C			
Degree of protection	IEC standards IP67, JIS C0920 (water tight)			
Contact protection circuit *5	None			
Weight	1 m: 22 g 3 m: 57 g 5 m: 93 g			

*1: M*H is available for SRL3, SRG3, and SRT3.
*2: Refer to the pages of each cylinder model for switch model No. capable of installing on a cylinder.
*3: Contact CKD separately for cylinder switch with connector.
*4: Internal resistance 0.5 Ω or less.
***5: Refer to Intro Page 80 for contact protective measures.**

Dimensions

● M*V Series (L-shaped lead wire)

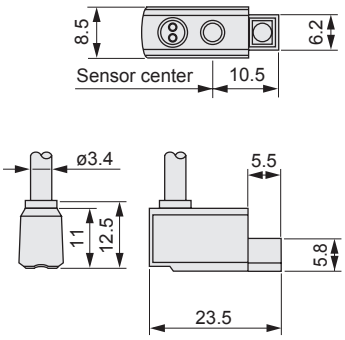

● M*W Series (2-color LED, L-shaped lead wire)

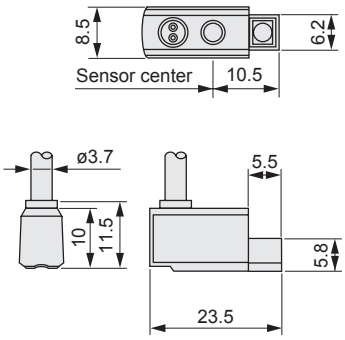

● M*H Series (straight lead wire)

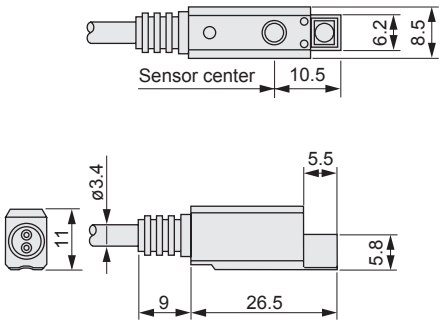

Switch internal circuit diagram

● M2V/M2H/M2WV

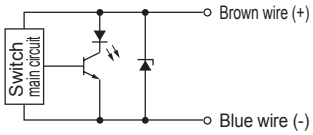

● M3V/M3H/M3WV

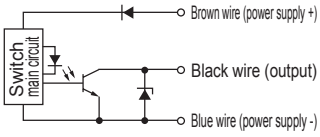

● M3PV/M3PH

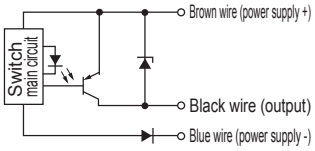

● M0V/M0H

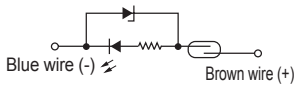

● M5V/M5H

R Series	Application cylinder	GLC HCA MFC SHC

CE
(Excluding R1 and R4)

R*/R*Y

R*B

Specifications

Descriptions	Proximity 2-wire			Proximity 3-wire	
	R1/R1K	R2/R2K	R2Y/ R2YK (2-color LED)	R3/R3K	R 3Y/R3YK (2-color LED)
Applications	Programmable controller, relay, compact solenoid valve	Dedicated for programmable controller		Programmable controller, relay, IC circuit, solenoid valve	
Output method	-			NPN output	
Power supply voltage	-	-		4.5 to 28 VDC	
Load voltage	85 to 265 VAC	10 to 30 VDC		30 VDC or less	30 VDC or less
Load current	5 to 100mA	5 to 30mA		200 mA or less	100 mA or less
Current consumption	-	-		With 24 VDC (when ON)	
				10 mA or less	16 mA or less
Internal voltage drop	10% or less of load voltage	4 V or less		0.5 V or less with 150 mA	0.5 V or less
Indicator lamp	Red LED (Lit when ON)		Red/green LED (Lit when ON)	Red LED (Lit when ON)	Red/green LED (Lit when ON)
Leakage current	1 mA or less with 100 VAC, 2 mA or less with 200 VAC	1 mA or less		10 μA or less	
Lead wire length	1 m (oil resistant vinyl cabtyre cable 2-conductor 0.3mm^2)			1 m (oil resistant vinyl cabtyre cable 3-conductor 0.2mm^2)	
Shock resistance	980m/s^2				
Insulation resistance	20 MΩ and over with 500 VDC megger				
Withstand voltage	1500 VAC, per minute No failure after application	No failure after 1 minute of 1,000 VAC application.			
Ambient temperature	-10 to +60°C				
Degree of protection	Grommet: IEC standards IP67, JIS C0920 (water-tight)				
Option	With terminal box R*B (no waterproof)				
Weight	1 m: 42 g 3 m: 100 g 5 m: 158 g		1 m: 56 g 3 m: 114 g 5 m: 172 g	1 m: 42 g 3 m: 100 g 5 m: 158 g	1 m: 56 g 3 m: 114 g 5 m: 172 g

Ending

Descriptions	Reed 2-wire								
	R 0			R 4		R 5			R 6
Applications	Relay, programmable For controllers			For high capacity relay, solenoid valve		For programmable controller, relay, IC circuit (no indicator lamp), serial connection			Dedicated for programmable controller (with DC self-hold)
Power supply voltage	-			-		-			-
Load voltage	12/24 VDC	110 VAC	220 VAC	110 VAC	220 VAC	5/12/24 VDC	110 VAC	220 VAC	24 VDC ±10%
Load current	5 to 50 mA	7 to 20 mA	7 to 10 mA	20 to 200 mA	10 to 200 mA	50 mA or less	20 mA or less	10 mA or less	5 to 50mA
Current consumption	-			-		-			-
Internal voltage drop	3.0 V or less			2 V or less		0.5V or less (*1)			5 V or less
Indicator lamp	Red LED(Lit when ON)			Neon light OFF (Lit when OFF)		No			Red LED(Lit when ON)
Leakage current	0mA			1 mA or less		0mA			0.1 mA or less
Lead wire length	1 m (oil resistant vinyl cabtyre cable 2-conductor 0.3mm^2)								
Shock resistance	294m/s^2								
Insulation resistance	20 MΩ and over with 500 VDC megger								
Withstand voltage	No failure after 1 minute of 1,500 VAC application.								
Ambient temperature	-10 to +60°C								
Degree of protection	Grommet: IEC standards IP67, JIS C0920 (water-tight)								
Contact protection circuit*2	Yes								None
Option	With terminal box R*B (no waterproof)								
Weight	1 m: 42 g 3 m: 100 g 5 m: 158 g								

*1: Internal resistance 10 Ω or less.
*2: Refer to Intro Page 80 for contact protective measures.

Dimensions

● R Series (grommet)

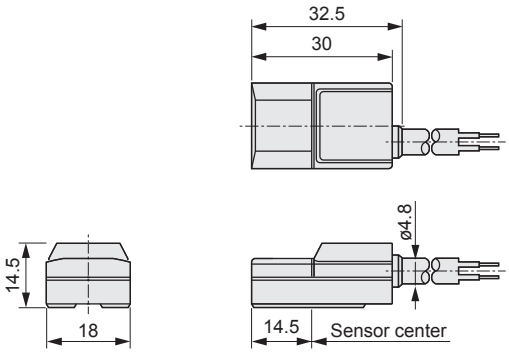

● R Series (terminal box R*B)

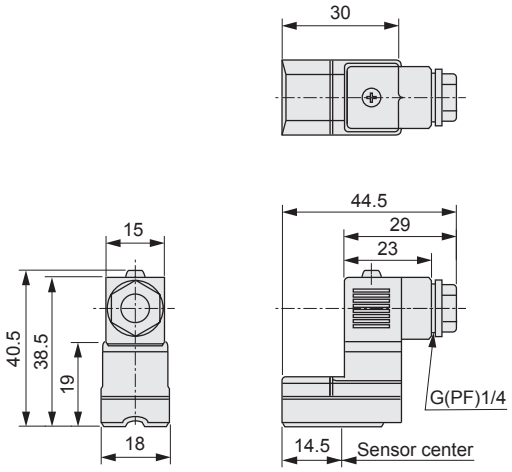

Switch internal circuit diagram

● R1

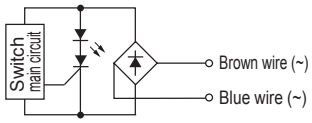

● R2/R2Y

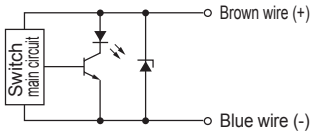

● R3/R3Y

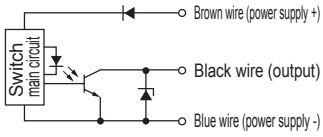

● R0

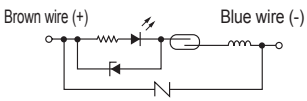

● R4

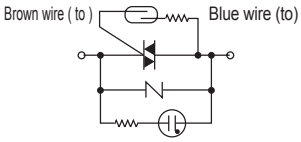

● R5

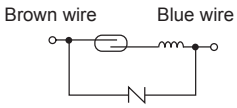

● R6

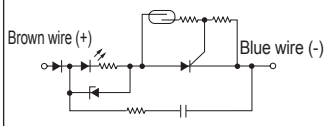

T Series	Application cylinder	CAC4	CKV2	CMA2	CMK2	HCM	JSC3	JSC4	JSG	JSK2	JSM2	LCG	LCR	LCW
		LCX	MRG2	MRL2	RCS2	RCC2	RRC	SCA2	SCG	SCM	SCP*3	SCS2	SRM3	SSD
		SSD2	SSG	STG	STS/STL	STK	UCA2	UCAC2	ULK	Hand	Chuck			

CE (T1,excluding T8)

T*H/T*WH

T*V/T*WV

T1H

T1V

T8H/T*YH
T2JH

T8V/T*YV
T2JV

Specifications

Descriptions	Proximity 2-wire						Proximity 3-wire			
	T1H/T1V	T2H/T2V	T2HR3/T2VR3 (Bend resist lead wire)	T2JH/T2JV (Off-delay)	T2YH/T2YV (2-color LED)	T2WH/T2WV (2-color LED)	T3H/T3V	T3PH/ T3PV (PNP output)	T3YH/T3YV (2-color LED)	T3WH/T3WV (2-color LED)
Applications	For programmable controller, relay, compact solenoid valve	Dedicated for programmable controller					For programmable controller, relay			
Output method	-						NPN output	PNP output	NPN output	NPN output
Power supply voltage	-						10 to 28 VDC			
Load voltage	85 to 265 VAC	10 to 30 VDC				24 VDC ±10%	30 VDC or less			
Load current	5 to 100mA	5 to 20 mA (*1)					100 mA or less		50 mA or less	
Current consumption	-	-					With 24 VDC 10 mA or less	With 24 VDC 10 mA or less	10 mA or less with 24 VDC	
Internal voltage drop	10% or less of load voltage	4 V or less					0.5 V or less			
Off-delay time	-			200±50 ms	-		-			
Indicator lamp	Red LED(Lit when ON)				Red/greenLED (Lit when ON)	Red/greenLED (Lit when ON)	Red LED (Lit when ON)	Yellow LED (Lit when ON)	Red/green LED (Lit when ON)	
Leakage current	1 mA or less with 100 VAC, 2 mA or less with 200 VAC	1 mA or less					10 μA or less			
Lead wire length *6	1 m (oil resistant vinyl Cabtyre cable 2-conductor 0.3mm^2)	1 m (oil resistant vinyl cabtyre cable 2-conductor 0.2mm^2)	3 m (elasticity, oil resistance Vinyl cabtyre cable 2-conductor 0.2mm^2)	1 m (oil resistant vinyl cab Tire cable 2-conductor 0.3mm^2)		1 m (oil resistant vinyl cabtyre cable 2-conductor 0.2mm^2)	1 m (oil resistant vinyl cab Tire cable 3-conductor 0.2mm^2)		1 m (oil resistant vinyl Cabtyre cable 3-conductor 0.3mm^2)	1 m (oil resistant vinyl Cabtyre cable 3-conductor 0.2mm^2)
Shock resistance	980m/s^2									
Insulation resistance	≥100 MΩ at 500 VDC (megger)	20 MΩ and over with 500 VDC megger		≥100 MΩ at 500 VDC (megger)		20 MΩ and over with 500 VDC megger	20 MΩ and over with 500 VDC megger		100 MΩ and over with 500 VDC megger	20 MΩ and over with 500 VDC megger
Withstand voltage	No failure after 1 minute of 1,500 VAC application.	No failure after 1 minute of 1,000 VAC application.								
Ambient temperature	-10 to +60°C									
Degree of protection	IEC standards IP67, JIS C0920 (water tight)									
Weight	1 m: 33g 3 m: 87g 5 m: 142g	1 m: 18 g 3 m: 49 g 5 m: 80 g		1 m: 33 g 3 m: 87 g 5 m: 142 g		1 m: 18 g 3 m: 49 g 5 m: 80 g	1 m: 18 g 3 m: 49 g 5 m: 80 g		1 m: 33 g 3 m: 87 g 5 m: 142 g	1 m: 18 g 3 m: 49 g 5 m: 80 g

Descriptions	Reed 2-wire						
	T0H/T0V		T5H/T5V		T8H/T8V		
Applications	For programmable controller, relay		For programmable controller, relay, IC circuit (no indicator lamp), serial connection		For programmable controller, relay		
Power supply voltage	-						
Load voltage	12/24 VDC	110 VAC	5/12/24 VDC	110 VAC	12/24 VDC	110 VAC	220 VAC
Load current	5 to 50mA	7 to 20mA	50 mA or less	20 mA or less	5 to 50mA	7 to 20mA	7 to 10mA
Current consumption	-						
Internal voltage drop	3 V or less (For DC, at load current 30mA)		0.1V or less (*5)		4 V or less		
Indicator lamp	Red LED (Lit when ON)		No indicator lamp		Red LED (Lit when ON)		
Leakage current	0mA						
Lead wire length	1 m (oil resistant vinyl cabtyre cable 2-conductor 0.2mm^2)				1 m (oil resistant vinyl cabtyre cable 2-conductor 0.3mm^2)		
Shock resistance	294m/s^2						
Insulation resistance	20 MΩ and over with 500 VDC megger				100 MΩ and over with 500 VDC megger		
Withstand voltage	No failure after 1 minute of 1,000 VAC application.				No failure after 1 minute of 1,500 VAC application		
Ambient temperature	-10 to +60°C						
Degree of protection	IEC standards IP67, JIS C0920 (water tight)						
Contact protection circuit *6	None				Yes		
Weight	1 m: 18 g 3 m: 49 g 5 m: 80 g				1 m: 33g 3 m: 87g 5 m: 142g		

*1:The above max. load current is 20 mA at 25°C. The current is lower than 20 mA if the operating ambient temperature around the switch is higher than 25˚C. (5 to 10 mA at 60°C)
*2: T2HR3, T2VR3, T3PH and T3PV switches are available as made to order when installed onto compatible cylinders.
*3: T2JH and T2JV switches are available as made to order when installed onto SRL3 (ø32 to ø100), MRL2, LCR, UCAC2 or Hand-chuck.
*4: Switch types are limited depending on cylinder. Refer to each cylinder page for the details.
*5: Internal resistance 0.5 Ω or less *6:Refer to Intro Page 80 for contact protective measures.

T Series	AC magnetic field	Application cylinder	CAC4 SCM SSG	JSC3 SCS2 STG	JSC4 SRG3 STS/STL	JSG SRL3 UCAC2	RCC2 SRM3 USC	RCS2 SRT3 USSD	SCA2 SSD	SCG SSD2

T2YD

Specifications

Descriptions	Proximity 2-wire		
	T2YD	T2YDT	T2YDU (Made to order)
Applications	Dedicated for programmable controller		
Indicator lamp	Red/green LED (Lit when ON)		
Load voltage	24 VDC ±10%		
Load current	5 to 20mA		
Internal voltage drop	6 V or less		
Leakage current	1.0 mA or less		
Output delay time *1 (ON delay, OFF delay)	60 ms or less		
Lead wire length	1 m (oil resistant vinyl cabtyre cable ø6, 0.5 mm^2× 2-conductor) *2	1 m (flame-resistant vinyl cabtyre cable ø6, 0.5 mm^2× 2-conductor) *2	0.3 m (flame-resistant vinyl cabtyre cable with M12 cable connector, AWG20, 2-conductor)
Insulation resistance	100 MΩ and over with 500 VDC megger		
Withstand voltage	No failure after 1 minute of 1,000 VAC application.		
Shock resistance	980m/s^2		
Ambient temperature	-10 to +60°C		
Degree of protection	JIS C0920 (water-tight), IEC standards IP67		
Weight	1 m: 61 g 3 m: 166 g 5 m: 272 g		35

*1 : Indicates the time from magnetic sensor detection of the piston magnet until switch output.
*2: 3 m and 5 m lead wires are available as options.
3 : The AC magnetic field proof switch (T2YD) is for AC welding machines, so the effect of strong magnetic field proof performance cannot be obtained with DC welding machines.

T Series	Cutting oil	Application cylinder	CMK2-G2/3 SSD-G2/3	HRL-G2/3 SSD2-G2/3	SCA2-G2/3 STG-G2/3	SCG-G2/3 STS/STL-G2/3

T*YLH

Specifications

Descriptions	Proximity 2-wire	Proximity 3-wire
	T2YLH, T2YLV	T3YLH, T3YLV
Applications	Dedicated for programmable controller	Programmable controller, relay
Output method	-	NPN output
Power supply voltage	-	10 to 28 VDC
Load voltage	10 to 30 VDC	30 VDC or less
Load current	5 to 20mA	50 mA or less
Current consumption	-	10 mA or less at 24 VDC (when ON)
Internal voltage drop	4 V or less	0.5 V or less
Leakage current	1 mA or less	10 μA or less
Indicator lamp	Red/green LED (Lit when ON)	
Lead wire	Oil resistant vinyl cabtyre cable 0.3mm^2, 2 conductor 1 m	Oil resistant vinyl cabtyre cable 0.2mm^2, 3 conductor 1 m
Insulation resistance	100 MΩ and over with 500 VDC megger	
Withstand voltage	No failure after 1 minute of 1,000 VAC application.	
Shock resistance	980m/s^2	
Hysteresis	1.5 mm or less	
Ambient temperature	-10 to +60°C	
Degree of protection	IEC Standards IP67, JIS C0920 (water-tight), oil resistance (substrate coating)	
Weight	1 m: 33g 3 m: 87g 5 m: 142g	

Dimensions

● T*H/T*WH Series
(straight lead wire)

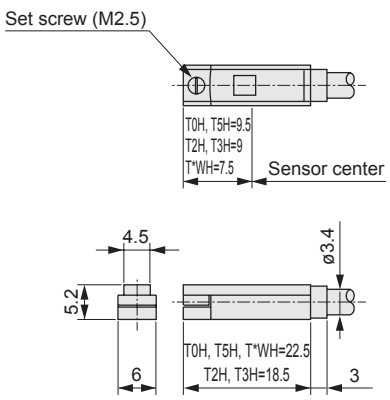

● T*YH/T2JH/T8H Series
(straight lead wire)

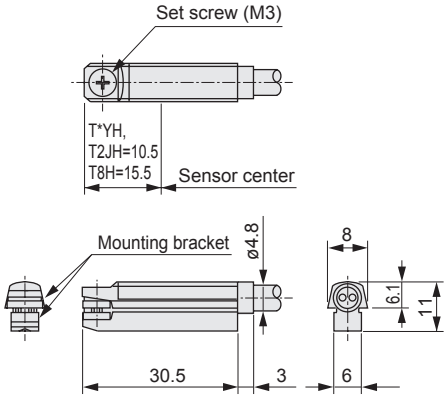

● T1H Series
(straight lead wire)

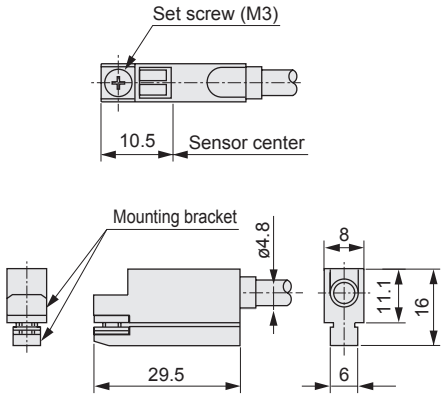

● T*V/T*WV Series
(L-shaped lead wire)

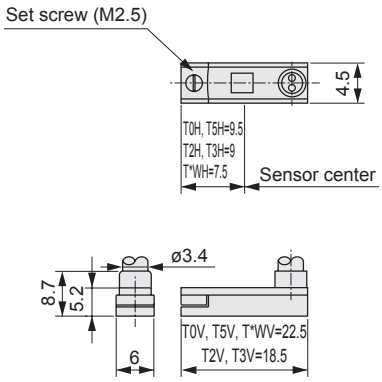

● T*YV/T2JV/T8V Series
(L-shaped lead wire)

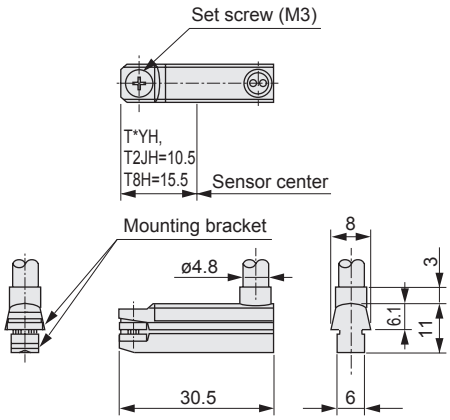

● T1V Series
(L-shaped lead wire)

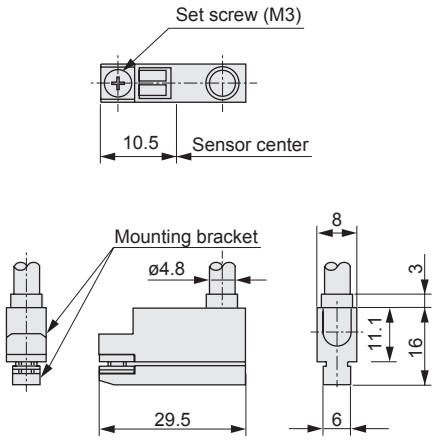

Ending

● T2YD (switch for AC magnetic field)

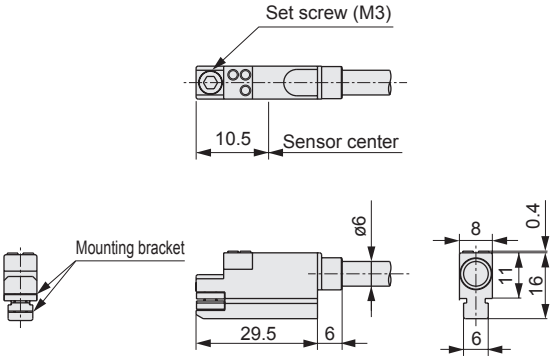

● T2YDU (switch for AC magnetic field with M12 cable connector)

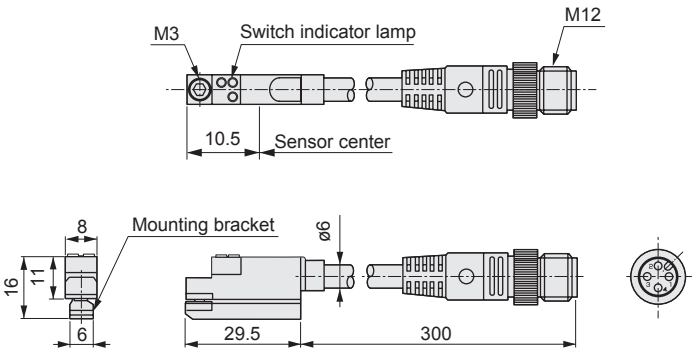

Dimensions

● T*YLH Series
(straight lead wire)

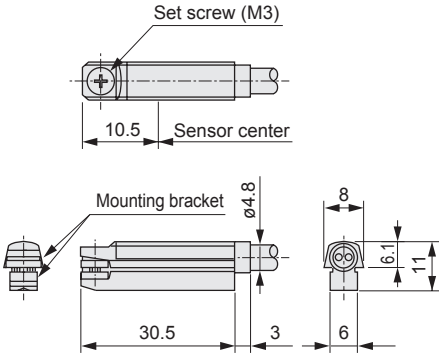

● T*YLV Series
(L-shaped lead wire)

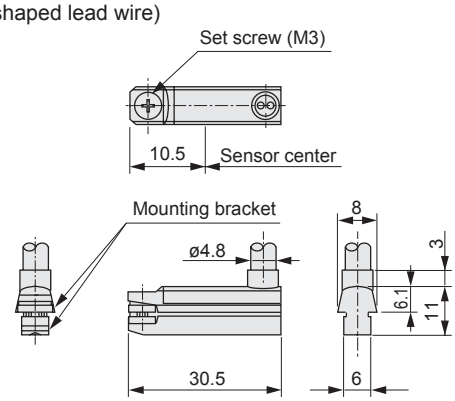

Switch internal circuit diagram

● T1H/T1V	● T2H/T2V/T2YH/T2YV/T2WH/ T2WV/T2JH/T2JV/T2YLH/T2YLV	● T3H/T3V/T3YH/T3YV/T3WH/ T3WV/T3YLH/T3YLV	● T3PH/T3PV
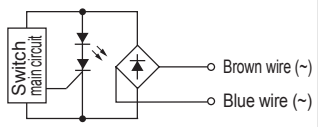	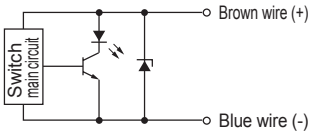	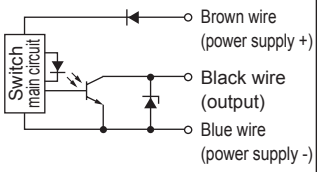	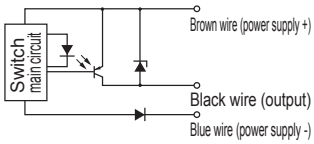
● T0H/T0V	**● T5H/T5V**	**● T8H/T8V**	**● T2YD/T2YDT/T2YDU**
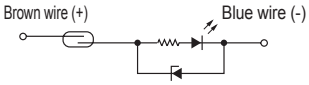		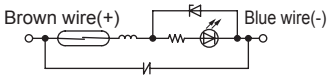	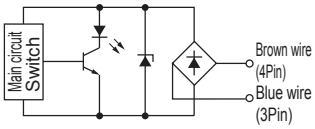 This switch is not polarized. Values in ( ) are the pin layout for T2YDU. However, 1-pin and 2-pin are NC

K Series	Application cylinder	SMG STR2

K*H
K3PH

K*V
K3PV

K*YH

K*YV

Specifications

Descriptions	Proximity 2-wire		Proximity 3-wire		
	K2H/K2V	K2YH/K2YV	K3H/V (NPN output)	K3PH/V (PNP output)	K3YH/V (2-color LED)
Applications	Dedicated for programmable controller		For programmable controller, relay		
Output method	-		NPN output	PNP output	NPN output
Power supply voltage	-		10 to 28 VDC		
Load voltage	10 to 30 VDC		30 VDC or less		
Load current	5 to 20 mA (*1)		50 mA or less		
Current consumption	-		10 mA or less with 24 VDC	10 mA or less with 24 VDC	10 mA or less with 24 VDC
Internal voltage drop	4 V or less		0.5 V or less		
Indicator lamp	Red LED(Lit when ON)	Red/green LED (Lit when ON)	Red LED(Lit when ON)	Yellow LED (Lit when ON)	Red/green LED (Lit when ON)
Leakage current	1 mA or less		10 μA or less		
Lead wire length	1 m (oil resistant vinyl cabtyre cable 2-conductor 0.2mm^2)	1 m (oil resistant vinyl cabtyre cable 2-conductor 0.3mm^2)	1 m (oil resistant vinyl cabtyre cable 3-conductor 0.2mm^2)		1 m (oil resistant vinyl cabtyre cable 3-conductor 0.2mm^2)
Shock resistance	980m/s^2				
Insulation resistance	20 MΩ and over with 500 VDC megger	100 MΩ and over with 500 VDC megger	20 MΩ and over with 500 VDC megger		100 MΩ and over with 500 VDC megger
Withstand voltage	No failure after 1 minute of 1,000 VAC application.				
Ambient temperature	-10 to +60°C				
Degree of protection	IEC standards IP67, JIS C0920 (water tight)				
Weight	1 m: 18 g 3 m: 49 g 5 m: 80 g	1 m: 31 g 3 m: 85 g 5 m: 139 g	1 m: 18 g 3 m: 49 g 5 m: 80 g		1 m: 31 g 3 m: 85 g 5 m: 142 g

Descriptions	Reed 2-wire			
	K0H/K0V		K5H/K5V	
Applications	For programmable controller, relay		For programmable controller, relay, IC circuit (no indicator lamp), serial connection	
Power supply voltage	-			
Load voltage	DC12/24V	110 VAC	DC5/12/24V	110 VAC
Load current	5 to 50mA	7 to 20mA	50 mA or less	20 mA or less
Current consumption	-			
Internal voltage drop	3 V or less (with 30mA load current for DC)		0.1V or less (*3)	
Indicator lamp	Red LED(Lit when ON)		-	
Leakage current	0mA			
Lead wire length	1 m (oil resistant vinyl cabtyre cable 2-conductor 0.2mm^2)			
Shock resistance	294m/s^2			
Insulation resistance	20 MΩ and over with 500 VDC megger			
Withstand voltage	No failure after 1 minute of 1,000 VAC application.			
Ambient temperature	-10 to +60°C			
Degree of protection	IEC standards IP67, JIS C0920 (water tight)			
Contact protection circuit*4	None			
Weight	1 m: 18 g 3 m: 49 g 5 m: 80 g			

*1: The above max. load current is the value at 25°C. The current is lower than 20 mA if the operating ambient temperature around the switch is higher than 25°C. (5 to 10 mA at 60°C)
*2: Installation of K3PH, K3PV onto compatible cylinders is made to order.
*3: Internal resistance 0.5 Ω or less.
*4: Refer to Intro Page 80 for contact protective measures.

Dimensions

● K*H Series (straight lead wire)

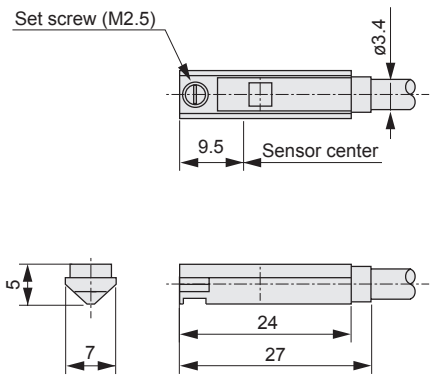

● K*YH Series
(2-color LED, straight lead wire)

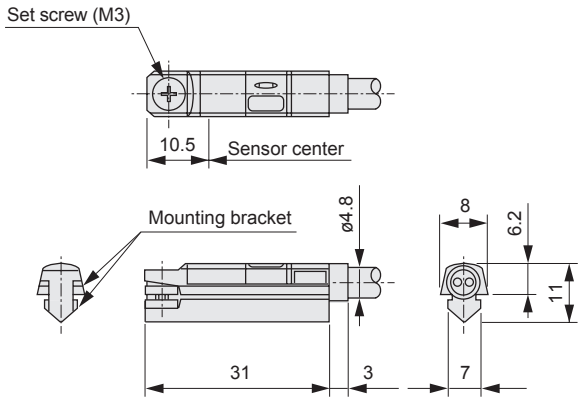

● K*V Series (L-shaped lead wire)

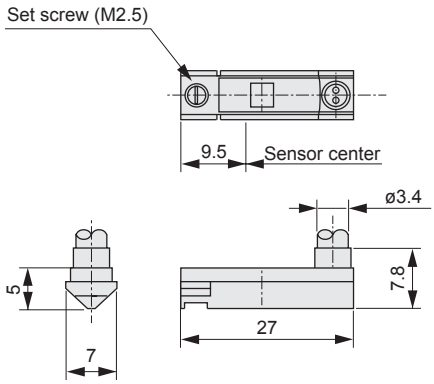

● K*YV Series
(2-color LED, L-shaped lead wire)

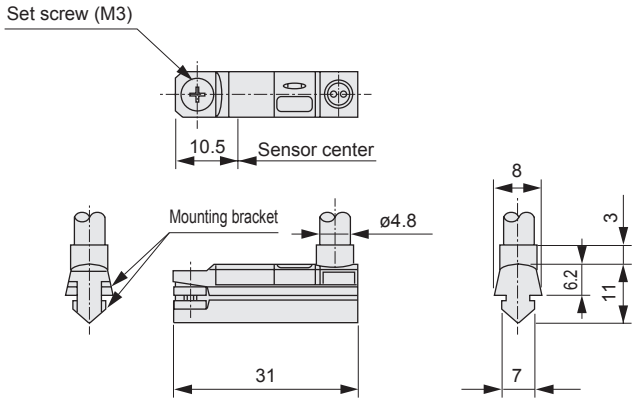

Switch internal circuit diagram

● K2H/K2V/K2YH/K2YV

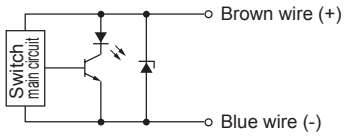

● K3H/K3V/K3YH/K3YV

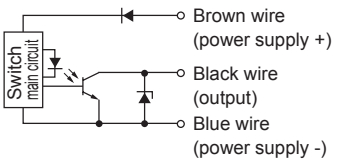

● K3PH/K3PV

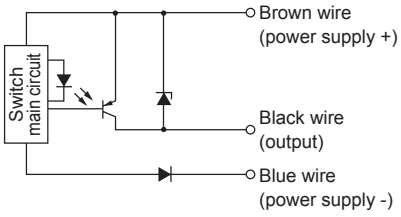

● K0H/K0V

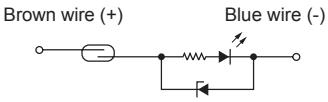

● K5H/K5V

F Series	Application cylinder	CKL2 LCG LCM LCR LSH MDC2 MSD MSDG-L MVC RCS2 SSD2 STM Hand (LSH BSA2 LHA)

Uses a bend-resistant lead wire as standard.

* There are bore sizes which cannot be combined.

F*S

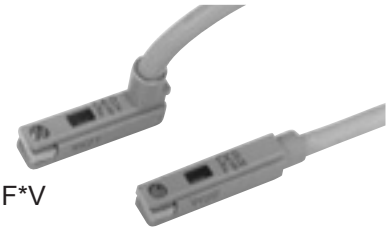

F*V

F*H

F*YV
F3PV

F*YH
F3PH

Specifications

Descriptions	Reed 2-wire	Proximity 2-wire		Proximity 3-wire		
	F0H/V	F2H/V / F2S	F2YH/F2YV	F3H/V / F3S	F3PH/V	F3YH/F3YV
Applications	Dedicated for programmable controller			For programmable controller, relay		
Output method	-			NPN output	PNP output	NPN output
Power supply voltage	-			10 to 28 VDC	4.5 to 28 VDC	10 to 28 VDC
Load voltage	24 VDC ±10%	10 to 30 VDC	24 VDC ±10%	30 VDC or less		
Load current	5 to 20 mA (*1)			50 mA or less		
Current consumption	-			10 mA or less with 24 VDC		
Internal voltage drop	4 V or less			0.5 V or less	0.5 V or less at 30 mA	0.5 V or less
Indicator lamp	Yellow LED (Lit when ON) *3		Red/green LED (Lit when ON)	Yellow LED *3 (Lit when ON)	Yellow LED (Lit when ON)	Red/green LED (Lit when ON)
Leakage current	1 mA or less			10 μA or less		
Lead wire length	1 m (elasticity, oil resistant vinyl cabtyre cable 2-conductor 0.15mm^2)			1 m (elasticity, oil resistant vinyl cabtyre cable 3-conductor 0.15mm^2)		
Shock resistance	294m/s^2	980m/s^2				
Insulation resistance	20 MΩ and over with 500 VDC megger					
Withstand voltage	No failure after 1 minute of 1,000 VAC application.					
Ambient temperature	-10 to +60°C					
Degree of protection	IEC standards IP67, JIS C0920 (water-tight)					
Contact protection circuit *4	None	-				
Weight	1 m: 10 g 3 m: 29 g			1 m: 10 g 3 m: 29 g		

*1:The max. load current is 20mA at 25°C. The current is lower than 20 mA if the operating ambient temperature around the switch is higher than 25°C. (5 to 10 mA at 60°C)
*2: With F2S and F3S, if mounting two switches in one groove to enable detection at both ends, mount them so that their set screws face outward.
*3: Indicators for F2S and F3S are red.
*4: Refer to Intro Page 80 for contact protective measures.
*5: Uses a bend-resistant lead wire.

Dimensions

● F*S Series (Lead wire vertical lead-out, for short stroke detection)

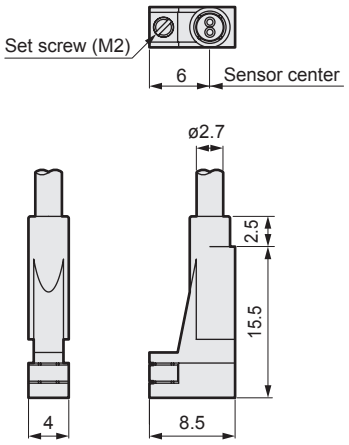

● F*H Series (straight lead wire)

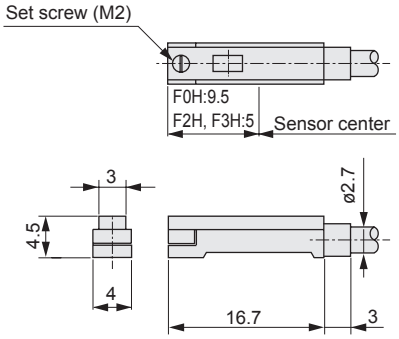

● F*V Series (L-shaped lead wire)

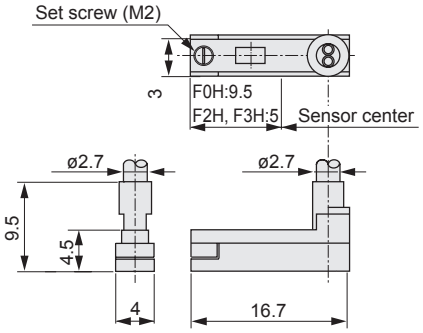

● F*YH/F3PH Series (straight lead wire)

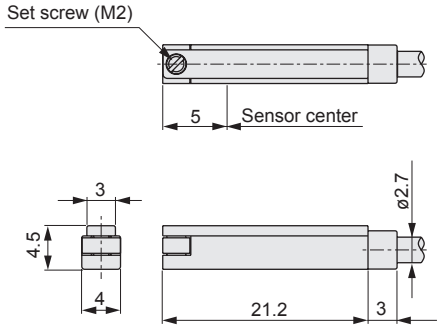

F*YV/F3PV Series (L-shaped lead wire)

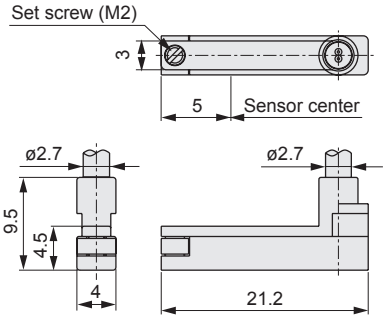

Switch internal circuit diagram

● F0H/F0V	● F2S/F2H/F2V/F2YH/F2YV	● F3S/F3H/F3V/F3YH/F3YV	● F3PH/F3PV
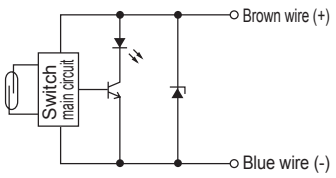	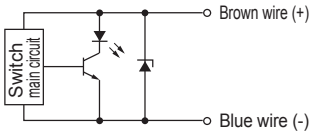	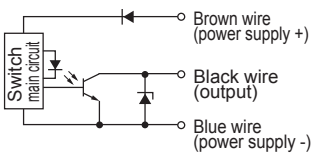	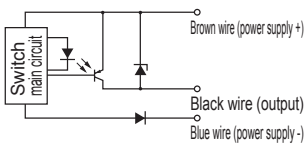

H Series	Strong magnetic field proof	Applicable cylinder	CAC4-L2 GLC-L2 JSC3-L2 SCA2-L2 SHC-L2 UCAC2-L2 USC-L2

H0

H0Y

Specifications

Item	Reed 2-wire		
	H0		H0Y (2-color LED)
Applications	For programmable controller, relay		Dedicated for programmable controller
Load voltage	12/24 VDC	110 VAC	24 VDC ±10%
Load current	5 to 50 mA	7 to 20 mA	5 to 20 mA
Internal voltage drop	5 V or less		6 V or less
Indicator	Green LED (Lit when ON)		Red/green LED (Lit when ON)
Leakage current	0 mA		10 μA or less
Lead wire length	1 m (flame-resistant cabtyre cable 2-conductor 0.5 mm^2)		
Insulation resistance	100 MΩ and over with 500 VDC megger		
Withstand voltage	No failure after 1 minute of 1,000 VAC application.		
Shock resistance	294 m/s^2		
Ambient temperature	-10 (14°F) to +60°C (140°F)		
Degree of protection	IEC Standard IP67, JIS C0920 (water-tight), oil resistance		
Contact protection circuit *1	None		
Weight	1 m:76 g 3 m:181 g 5 m:289 g		

*1: Refer to Intro Page 80 for contact protective measures.

Dimensions

● H Series (strong magnetic field proof)

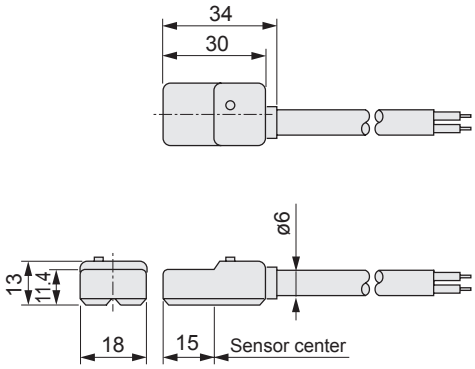

Switch internal circuit diagram

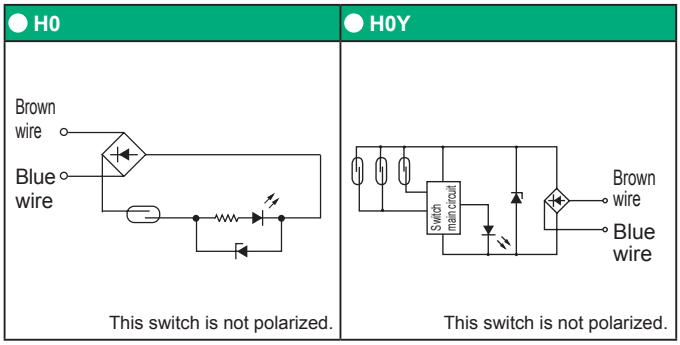

V Series	Small strong magnetic field proof	Applicable cylinder	SSD-L4 SSD2-L4 USSD-L4

V0

Specifications

Item	Reed 2-wire	
	V0	
Applications	For relay, programmable controller	
Load voltage	24 VDC	110 VAC
Load current	5 to 50 mA	7 to 20 mA
Internal voltage drop	3.0 V or less (with 40 mA load current)	
Indicator	LED (Lit when ON)	
Leakage current	0 mA	
Lead wire length	1 m (flame-resistant cabtyre cable 2-conductor 0.5 mm^2)	
Insulation resistance	100 MΩ and over with 500 VDC megger	
Withstand voltage	No failure after 1 minute of 1,000 VAC application.	
Shock resistance	294 m/s^2	
Ambient temperature	-10 (14°F) to +60°C (140°F)	
Degree of protection	IEC Standards IP67, JIS C0920 (water-tight), oil resistance	
Contact protection circuit *1	None	
Weight	1 m:63 g 3 m:170 g 5 m:277 g	

*1: Refer to Intro Page 80 for contact protective measures.

Dimensions

● V Series (strong magnetic field proof)

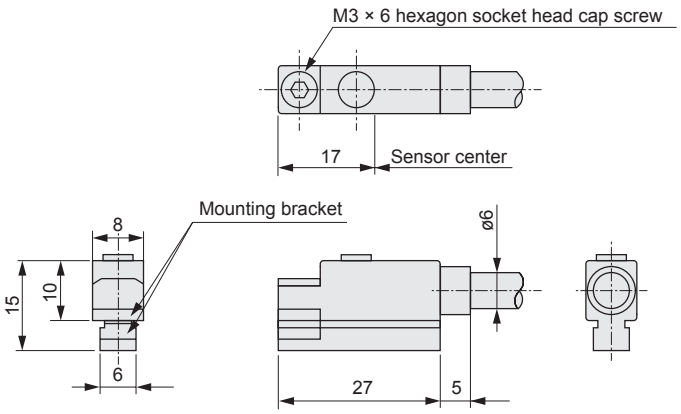

Switch internal circuit diagram

● V0

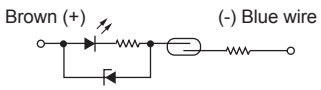

E Series	Heat resistance	Applicable cylinder	SCA2-L2T(E0) SSD-T1L(ET0) SSD2-T1L(ET0)

(Excluding E0)

E0

ET0

Specifications

Item	Reed 2-wire				
	E0			ET0	
Applications	For relay, programmable controller				
Load voltage	12/24 VDC	110 VAC	220 VAC	12/24 VDC	110 VAC
Load current	5 to 50 mA	7 to 20 mA	7 to 10 mA	5 to 50 mA	7 to 20 mA
Internal voltage drop	4 V or less			3.0 V or less	
Leakage current	0 mA				
Indicator	Red LED (Lit when ON)			Yellow LED (Lit when ON)	
Conduit screw	G1/2			-	
Lead wire length	-			1 m (heat-resistant fluorine insulation cabtyre cable 2-conductor 0.5 mm^2)	
Insulation resistance	100 MΩ and over with 500 VDC megger				
Withstand voltage	No failure after 1 minute of 1,500 VAC application.			No failure after 1 minute of 1,000 VAC application.	
Shock resistance	294 m/s^2				
Ambient temperature	-10 (14°F) to +120°C (248°F)			-10 (14°F) to +150°C (302°F)	
Degree of protection	IEC Standards IP67, JIS C0920 (water-tight), oil resistance				
Contact protection circuit *1	None				
Weight	164 g			44 g	

*1: Refer to Intro Page 80 for contact protective measures.

Dimensions

● E Series

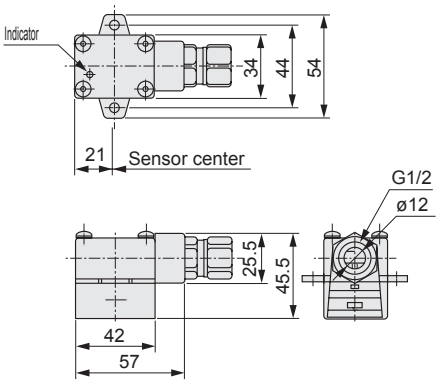

● ET0H Series (straight lead wire)

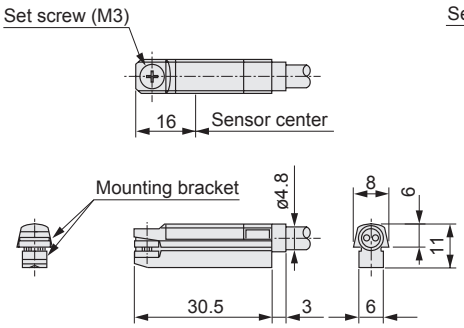

● ET0V Series (L-shaped lead wire)

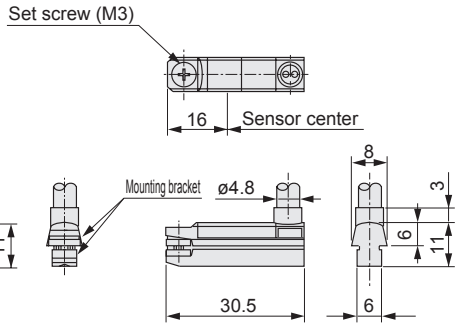

Switch internal circuit diagram

● E0	● ET0H
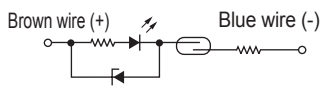	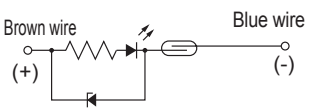

Contact protecting circuit box	SKAC/SKDC

Specifications

Item	For AC circuit		For DC circuit
	SKAC		SKDC
Load voltage	100/110 VAC	200/220 VAC	24 VDC
Load current	20 mA or less	10 mA or less	50 mA or less
Lead wire length	1 m (oil resistant vinyl cabtyre cable 2-conductor 0.2 mm^2)		
Shock resistance	980 m/s^2		
Insulation resistance	100 MΩ or more at 500 VDC megger		
Withstand voltage	No failure after 1 minute of 1,500 VAC application		
Ambient temperature	-10 (14°F) to +60°C (140°F)		
Degree of protection	IEC Standards IP67, JIS C0920 (water-tight), oil resistance		

How to order

SW - SKAC

Code	Description
SKAC	Circuit AC
SKDC	Circuit DC

Dimensions

● SKAC/SKDC Series

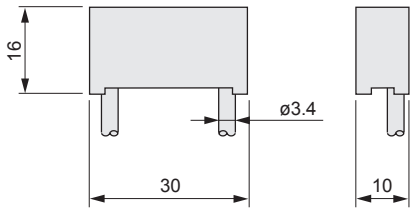

Internal circuit diagram

● SKAC/SKDC

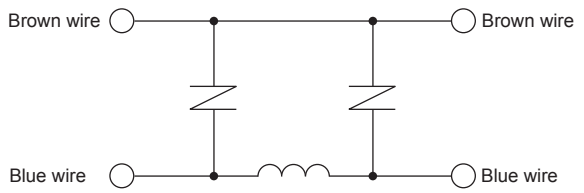

*: Input side and output side do not have polarity, so either can be connected to the switch.

Note: SKAC is for AC circuit only and SKDC is for DC circuit only.

Cylinder switch with connector

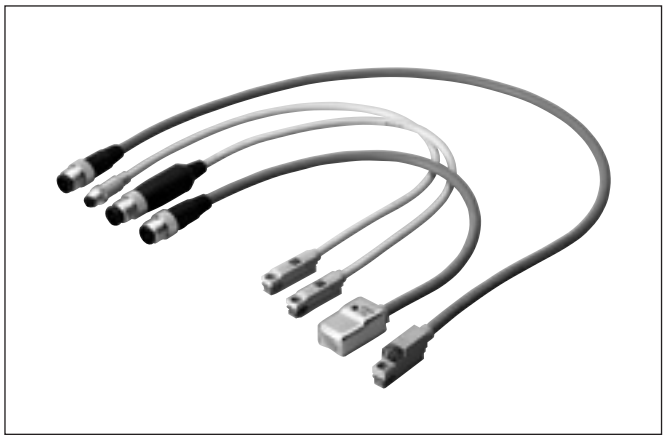

Features

M8 and M12 connectors with high versatility are adopted

- Conforms to standards No. NECA4202 and IEC947-5-2
- Reduced work-hours for piping and ease of maintenance
- IP67 is adopted as degree of protection
- Protective cover for anti-spatter adherence is available

●For T0H

●For T2YD

How to order

* This is a made-to-order product.

●2-wire cylinder switch

SW - T0 H F K
(A) (B) (C) (D)

Ⓐ Model	Ⓑ Lead wire leadout direction		Ⓒ Connector type, PIN configuration		Lead wire length		Ⓓ Option *3	
T0	H	Straight type	F	M8 connector 4PIN (+) 3-pin (-) *1	Blank	0.3m	K	Protective cover for anti-spatter adherence
T2	V	L-shaped type	M	M12 connector 1PIN (+) 4PIN (-)				
T2W			U	M12 connector 3, 4PIN not polarized *2				
T2YL								
K2Y								
F2Y								

*3: Applies only to T0H□□

*1: Supports only T0, T2, T2W
*2: Does not support T2YL. Note that the "internal voltage drop" will be higher by 1 V than the specification value listed in the catalog.

●3-wire cylinder switch

SW - T3 H F
(A) (B) (C)

Ⓐ Model	Ⓑ Lead wire leadout direction		Ⓒ Type of connector		Lead wire length	
T3	H	Straight type	F	M8 1PIN(+) 3PIN(-) 4PIN:(OUT)	Blank	0.3m
T3P	V	L-shaped type				
T3W						

●Cylinder switch for strong magnetic field

SW - H0 M
(A) (B)

Ⓐ Model	Ⓑ Type of connector		Lead wire length	
H0	M	M12 connector 1, 4PIN not polarized *4	Blank	0.3m
H0Y	U	M12 connector 3, 4PIN not polarized *5		
V0				

*4: Supports only H0, H0Y
*5: V0 only 4PIN (+) 3 PIN (-)

●Cylinder switch dedicated for AC magnetic field

SW - T2YD G K
(A) (B) (C)

Ⓐ Model	Ⓑ Type of connector		Lead wire length		Ⓒ Option	
T2YD	G	Spatter-proof lead wire M12 connector 1, 4-pin no polarity	Blank	0.3m	K	Protective cover for anti-spatter adherence
	B	Spatter-proof lead wire M12 connector 3, 4-pin no polarity				
	U	Flame-resistant lead wire UL electric wire M12 connector 3, 4PIN not polarized				
	W	Flame-resistant lead wire UL electric wire M12 connector 1, 4PIN not polarized				

*6 : Cylinder switch specifications are the same as those of lead wire. Refer to Ending Pages 16 to 26 for details.

Pin array of connector

Series	Connector pin array					
	Code	Type of connector	1PIN	2PIN	3PIN	4PIN
2-wire	F	M8	-	-	(-)	(+)
	M	M12	(+)	-	-	(-)
	U		-	-	(±)	(±)
Strong magnetic field proof Dedicated for AC magnetic field	M, G, W		(±)	-	-	(±)
	U, B*		-	-	(±)	(±)
3-wire	F	M8	(+)	-	(-)	(OUT)

* Only SW-V0U is polarized (4-pin (+), 3PIN (-)).

Connector specifications

Descriptions	M8	M12
Pin array	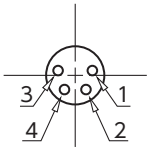	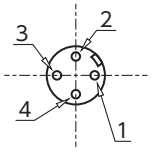
Shock resistance	294 m/s²	
Degree of protection	IP67	
Insulation resistance	100 MΩ with 500 VDC megger	
Withstand voltage	1000 VAC for 1 minute (between contacts and between contact housings) leakage current 1 mA or less	

dimensions

(1) M12 connector (connector for 2-wire cylinder switch, only pin array code of "U")

Standard for outer shape of connector section: IEC64076-2-101

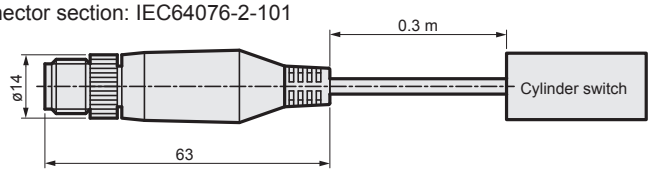

(2) M12 connector (M12 connector other than (1))

Standard for outer shape of connector section: IEC64076-2-101

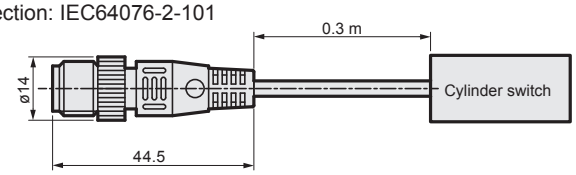

(3) M8 connector (supporting all models)

Standard for outer shape of connector section: IEC64076-2-104

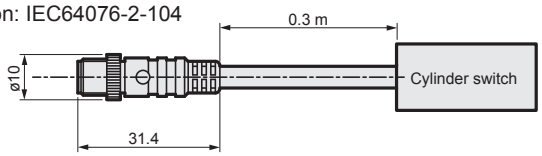

* For the external dimensions of the cylinder switch, refer to Ending Pages 18 to 26.

Series option

T type cylinder switch with off delay timer
T2JH/T2JV

Overview

Optimum for intermediate detection of high speed cylinder.
Off delay timer realizes secure PC input.

Features

- PC input malfunctions at cylinder intermediate detection are prevented.
- Off delay timer 200±50 ms
- Installation to rodless cylinder SRL3 is possible.
- A great variety of cylinders.

* Made-to-order product when a switch is installed on the cylinder.
* Switchs are limited depending on cylinder. Refer to each cylinder page for the details.

T type cylinder switch coolant proof
T2YLH/V, T3YLH/V

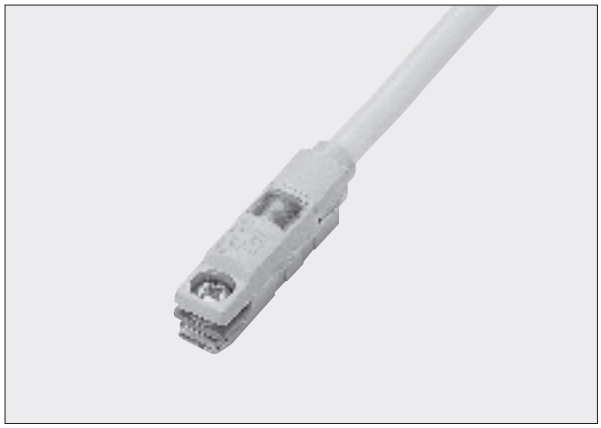

Overview

This is a cylinder switch that prevents coolant for machine tools used at machining site, etc., from entering the cylinder switch.

Features

- Oil resistance increased by applying coating to the circuit board.
  Usable even in an environment exposed to coolant.
- A great variety of cylinders

* Made-to-order product when a switch is installed on the cylinder.

Operational principle

Proximity switch

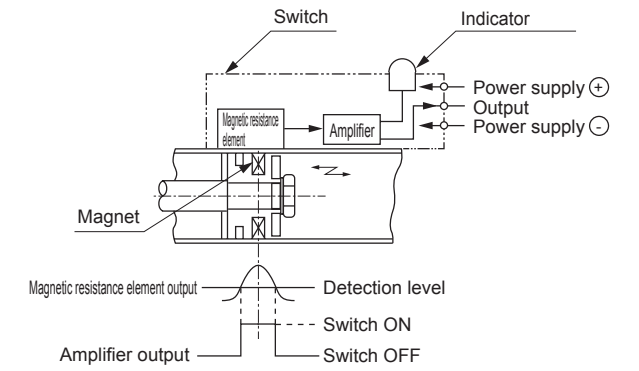

The magnetic field changes when the piston's magnet approaches, and the magnetic resistance element's output voltage changes as shown in the figure. Switching output as shown above is attained when this signal is amplified.

Reed switch

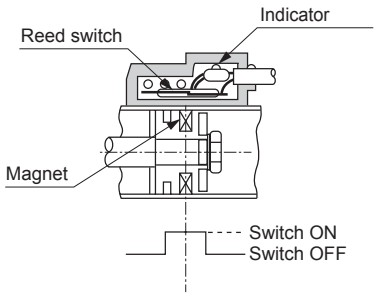

The magnetic field is generated when the piston's magnet approaches, and the contact matching the reed switch direction is magnetized to generate an attraction force and close the contact.

Switch mounting position

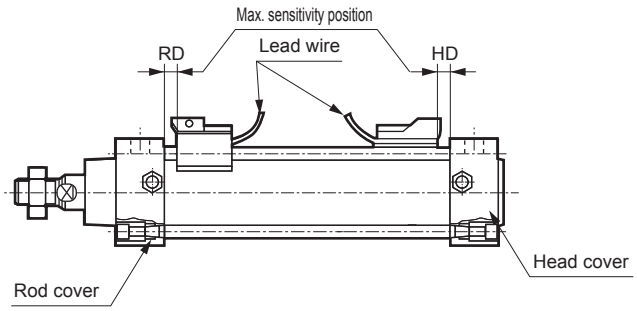

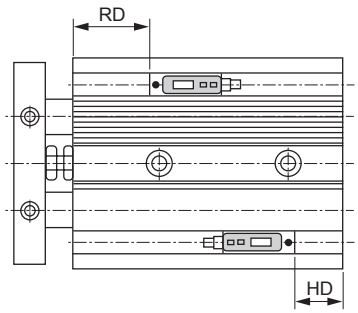

● Stroke end installation
To check that the switch functions at the max. sensitivity position, mount 1 each at the rod side RD dimension position and at the head side HD dimension position.
HD and RD dimensions differ based on a cylinder. Refer to each cylinder dimension.
Mount the switch so the lead wire comes to the inside as shown above.

● Intermediate stroke position installation
In detection at the middle of the stroke, fix the piston at the stop position, and move the switch back and forth over the piston.
Find the position where the switch turns ON first. The point between these 2 positions is the max. sensitivity position at that piston position, and is the installation position.

● Circumference direction installation
Differs depending on mounting bracket.
When using a band, no limits are set on circumference direction.
When using a tie rod, the position can be rotated in 90° increments. Circumferential rotation is not possible for the rail method.

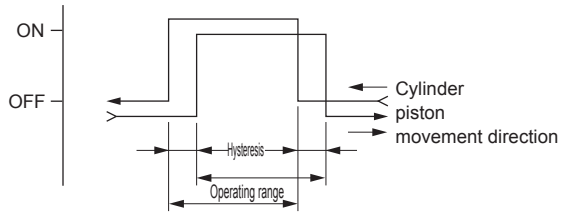

Hysteresis

● Hysteresis is the distance from the point where the piston moves and the switch turns ON to the point where the piston moves in the reverse direction and the switch turns OFF.
If the piston stops between these points, switch operation becomes unstable and is easily adversely affected by external sources. Please be careful.

Operating range

● The operating range is from the point where the piston moves and the switch turns ON to the point where the piston moves further in the same direction and the switch turns OFF.
The center of the operating range is max. sensitivity position. If this position is set as the piston stop position, it is not affected by disturbance and switch operation is stable.

Operating range and hysteresis of each cylinder model with switch

(Unit: mm)

Model No.	Bore size (mm)	Proximity switch				Reed switch		Page
		Operating range		Hysteresis		Operating range	Hysteresis	
		1-color type	2-color type	1-color type	2-color type			
Pencil shaped cylinder ● Applicable switch: Proximity switch (T2□, T3□, T2W□, T3W□), reed switch (T0□, T5□)								
SCP*3	ø6	1.5 to 4	2.5 to 5	1.5 or less	1.0 or less	4 to 6	3 or less	I-3
	ø10	1.5 to 5.5	2.5 to 6			3.5 to 7		
	ø16	2 to 6	2.5 to 6			3.5 to 7.5		
Medium bore size cylinder ● Applicable switch: Proximity switch (T2□, T3□, T3P□, T2J□, T2W□, T3W□, T2Y□, T3Y□, T1□), reed switch (T0□, T5□, T8□)								
CMK2	ø20	2.5 to 5.5	3.5 to 7.5	1.5 or less	1.0 or less	6.5 to 11	3 or less	I-79
	ø25	2.5 to 5.5	3.5 to 7.5			7.5 to 12		
	ø32	2.5 to 6	3.5 to 8			6.5 to 11.5		
	ø40	3 to 7	4 to 9			7.5 to 13.5		
Medium bore size cylinder ● Applicable switch: Proximity switch (T2□, T3□, T3P□, T2J□, T2W□, T3W□, T2Y□, T3Y□, T1□), reed switch (T0□, T5□, T8□)								
CMA2	ø20	3 to 6	5 to 6.5	1.5 or less	1.0 or less	8.5 to 12	3 or less	I-191
	ø30	3 to 5.5	6 to 7			8 to 13		
	ø40	2.5 to 5.5	5.5 to 7.5			8.5 to 12.5		
Round shaped cylinder ● Applicable switch: Proximity switch (T2□, T3□, T3P□, T2J□, T2W□, T3W□, T2Y□, T3Y□, T2YD, T1□), reed switch (T0□, T5□, T8□)								
SCM	ø20	3 to 8	4.5 to 9	1.5 or less	1.0 or less	6 to 14	3 or less	I-213
	ø25	3 to 9	5 to 9			5 to 14		
	ø32	3 to 8	5 to 9			5 to 12		
	ø40	3 to 9	5.5 to 9.5			6 to 14		
	ø50	3 to 9	6 to 10			6 to 14		
	ø63	3 to 9	6 to 10.5			7 to 15		
	ø80	4 to 10	6.5 to 11			7 to 15		
	ø100	4 to 10	7 to 11.5			9 to 15		
Tie rod cylinder ● Applicable switch: Proximity switch (T2□, T3□, T3P□, T2J□, T2W□, T3W□, T2Y□, T3Y□, T2YD, T1□), reed switch (T0□, T5□, T8□)								
SCG	ø32	2 to 7	6 to 9	1.5 or less	1.0 or less	6 to 11	3 or less	I-335
	ø40	2 to 7	6.5 to 9			7 to 12		
	ø50	2 to 7	7 to 10			7.5 to 12		
	ø63	2 to 7.5	7 to 10			8.5 to 13		
	ø80	2.5 to 8	7.5 to 10.5			9 to 13.5		
	ø100	2.5 to 8	8 to 11			9 to 14		
Medium bore size cylinder ● Applicable switch: Proximity switch (T2□, T3□, T3P□, T2J□, T2W□, T3W□, T2Y□, T3Y□, T2YD, T1□), reed switch (T0□, T5□, T8□)								
SCA2	ø40	2 to 7	3 to 10	1.5 or less	1.0 or less	5 to 12.5	3 or less	I-427
	ø50	2 to 7.5	3 to 10			5.5 to 13.5		
	ø63	2.5 to 7.5	3.5 to 10.5			5.5 to 14		
	ø80	3 to 8	4 to 11.5			6.5 to 14.5		
	ø100	3 to 8.5	4 to 11.5			6.5 to 15.5		
Medium bore size cylinder ● Applicable switch: Reed switch for strong magnetic fields (H0□) * The values in ( ) indicate H0Y.								
SCA2-L2	ø40	-		-	-	4 to 7.5(10.5 to 13.5)	3 or less	I-427
	ø50					4 to 7.5(11 to 14)		
	ø63					5 to 8(11.5 to 14.5)		
	ø80					5 to 8(10.5 to 14.5)		
	ø100					5 to 8(10.5 to 14.5)		
Large bore size cylinder ● Applicable switch: Proximity switch (T2□, T3□, T3P□, T2J□, T2W□, T3W□, T2Y□, T3Y□, T2YD, T1□), reed switch (T0□, T5□, T8□)								
SCS2	ø125	7.5 to 14	14 to 21	1.5 or less	1.0 or less	11 to 16	3 or less	I-605
	ø140	7.5 to 14	18 to 26					
	ø160	7.5 to 14	18 to 26					
	ø180	7.5 to 14	18 to 26					
	ø200	7.5 to 14	18 to 26					

Operating range and hysteresis of each cylinder model with switch

(Unit: mm)

Model No.	Bore size (mm)	Proximity switch				Reed switch		Page
		Operating range		Hysteresis		Operating range	Hysteresis	
		1-color type	2-color type	1-color type	2-color type			
Tie rod cylinder ● Applicable switch: Proximity switch (T2□, T3□, T3P□, T2J□, T2W□, T3W□, T2Y□, T3Y□, T1□), reed switch (T0□, T5□, T8□)								
CKV2	ø20	2.5 to 5.5	3.5 to 7.5	1.5 or less	1.0 or less	6.5 to 11	3 or less	I-659
	ø25	2.5 to 5.5	3.5 to 7.5			7.5 to 12		
	ø32	2.5 to 6	3.5 to 8			6.5 to 11.5		
	ø40	3 to 7	4 to 9			7.5 to 13.5		
Tie rod cylinder ● Applicable switch: Proximity switch (T2□, T3□, T3P□, T2J□, T2W□, T3W□, T2Y□, T3Y□, T2YD, T1□), reed switch (T0□, T5□, T8□)								
CAV2-L COVP2-L COVN2-L	ø50	3.8 to 6.7	4 to 6	0.8 or less	0.7 or less	7.7 to 8.3	1 or less	I-687
	ø75	3.8 to 6.7	4 to 6			7.7 to 8.3		
	ø100	3.8 to 6.7	4 to 6			7.7 to 8.3		
Compact cylinder ● Applicable switch: Proximity switch (T2□, T3□, T3P□, T2J□, T2W□, T3W□, T2Y□, T3Y□, T2YD, T1□), reed switch (T0□, T5□, T8□)								
SSD2	ø12	1.5 to 5.5	3 to 6	1.5 or less	1.0 or less	5 to 8	3 or less	I-729
	ø16	1.5 to 4.5	3 to 7			4 to 9		
	ø20	3 to 8	4.5 to 8			6 to 14		
	ø25	3 to 9	4.5 to 8			5 to 14		
	ø32	3 to 8	4.5 to 8			5 to 12		
	ø40	3 to 9	5 to 8.5			6 to 14		
	ø50	3 to 9	5.5 to 9.5			6 to 14		
	ø63	3 to 9	5.5 to 9.5			7 to 15		
	ø80	4 to 10	6 to 10			7 to 15		
	ø100	4 to 10	6 to 10			9 to 15		
	ø125	4 to 10	8 to 10			9 to 15		
	ø140	4 to 10	8 to 10			9 to 15		
	ø160	4 to 10	8 to 10			9 to 15		
Compact cylinder ● Applicable switch: Reed switch (ET0□)								
SSD2-T1L	ø16	-		-	-	8 to 11.5	3 or less	I-729
	ø20					9 to 13.5		
	ø25					9.5 to 14		
	ø32					9 to 13		
	ø40					9 to 14		
	ø50					11 to 16		
	ø63					13 to 18		
Compact cylinder ● Applicable switch: Proximity switch (T2□, T3□, T3P□, T2J□, T2W□, T3W□, T2Y□, T3Y□, T2YD, T1□), reed switch (T0□, T5□, T8□)								
SSG	ø12	1.5 to 5.5	3 to 6	1.5 or less	1.0 or less	5 to 8	3 or less	I-1049
	ø16	1.5 to 4.5	3 to 7			4 to 9		
	ø20	3 to 8	4.5 to 8			6 to 14		
	ø25	3 to 9	4.5 to 8			5 to 14		
	ø32	3 to 8	4.5 to 8			5 to 12		
	ø40	3 to 9	5 to 8.5			6 to 14		
	ø50	3 to 9	5.5 to 9.5			7 to 15		
	ø63	3 to 9	5.5 to 9.5			7 to 15		
	ø80	4 to 10	6 to 10			9 to 15		
	ø100	4 to 10	6 to 10			9 to 15		

Cylinder switch

Operating range and hysteresis of each cylinder model with switch

(Unit: mm)

Model No.	Bore size (mm)	Proximity switch				Reed switch		Page
		Operating range		Hysteresis		Operating range	Hysteresis	
		1-color type	2-color type	1-color type	2-color type			
Compact cylinder ● Applicable switch: Proximity switch (T2□, T3□, T3P□, T2J□, T2W□, T3W□, T2Y□, T3Y□, T2YD, T1□), reed switch (T0□, T5□, T8□)								
SSD	ø12	1.5 to 5.5	3 to 6	1.5 or less	1.0 or less	5 to 8	3 or less	I-1065
	ø16	1.5 to 4.5	3 to 7			4 to 9		
	ø20	3 to 8	4.5 to 8			6 to 14		
	ø25	3 to 9	4.5 to 8			5 to 14		
	ø32	3 to 8	4.5 to 8			5 to 12		
	ø40	3 to 9	5 to 8.5			6 to 14		
	ø50	3 to 9	5.5 to 9.5			6 to 14		
	ø63	3 to 9	5.5 to 9.5			7 to 15		
	ø80	4 to 10	6 to 10			7 to 15		
	ø100	4 to 10	6 to 10			9 to 15		
	ø125	4 to 10	8 to 10			9 to 15		
	ø140	4 to 10	8 to 10			9 to 15		
	ø160	4 to 10	8 to 10			9 to 15		
Compact cylinder ● Applicable switch: Reed switch (ET0□)								
SSD-T1L	ø16	-		-	-	8 to 11.5	3 or less	I-1065
	ø20					9 to 13.5		
	ø25					9.5 to 14		
	ø32					9 to 13		
	ø40					9 to 14		
	ø50					11 to 16		
	ø63					13 to 18		
Small direct mounting cylinder ● Applicable switch: Proximity switch (F2□, F3□), reed switch (F0□)								
MDC2	ø6	1.5 to 3.5	-	1.0 or less	-	3.5 to 6.0	1.0 or less	I-1327
	ø8							
	ø10							
MDC2-X	ø6	2.0 to 3.5	-	1.0 or less	-	5.5 to 7.5	1.0 or less	
	ø8							
	ø10							
MDC2-Y	ø6	1.5 to 3.5	-	1.0 or less	-	4.5 to 6.0	1.0 or less	
	ø8							
	ø10							
Small cylinder/suction pad ● Applicable switch: Proximity switch (F2□, F3□), reed switch (F0□)								
MVC	ø6	1.5 to 3.5	-	1.0 or less	-	3.5 to 6.0	1.0 or less	I-1353
	ø10					4.5 to 6.0		
Compact cylinder ● Applicable switch: Proximity switch (K2□, K3□, K3P□, K2Y□, K3Y□), reed switch (K0□, K5□)								
SMG	ø6	1.5 to 7	3.5 to 7.5	2 or less	1.5 or less	3 to 9.5	3 or less	I-1365
	ø10	1.5 to 7	3.5 to 7.5			3.5 to 9.5		
	ø16	1.5 to 7	4.5 to 8.5			4 to 11		
	ø20	2.5 to 9	5 to 9			5 to 12.5		
	ø25	3.5 to 11	5.5 to 9.5			6.5 to 14		
	ø32	3.5 to 11.5	1.5 to 10.5			5.5 to 14		
Small compact cylinder ● Applicable switch: Proximity switch (F2□, F3□), reed switch (F0□)								
MSD-*L MSDG-L	ø6	1.5 to 3.0	-	1.0 or less	-	5 to 6	1.0 or less	I-1397
	ø8	1.5 to 3.5	-			5.5 to 6.5		
	ø12	1.5 to 3.5	-			5.5 to 7.5		
	ø16	1.5 to 3.5	-			4.5 to 7		

Operating range and hysteresis of each cylinder model with switch

(Unit: mm)

Model No.	Bore size (mm)	Proximity switch				Reed switch		Page
		Operating range		Hysteresis		Operating range	Hysteresis	
		1-color type	2-color type	1-color type	2-color type			
Flat compact cylinder ● Applicable switch: Proximity switch (M2V, M3V, M3PV, M2WV, M3WV), reed switch (M0V, M5V)								
FCS-L	ø25	9 to 12	6 to 11	1.5 or less	1.0 or less	7 to 8.5	3 or less	I-1455
	ø32	9 to 12	6 to 11			7 to 8.5		
	ø40	8.5 to 12	6 to 11			7 to 8.5		
	ø50	8 to 12	6 to 11			6.5 to 8.5		
	ø63	8 to 12	6 to 11			6.5 to 8.5		
FCH-L FCD-L FCD-DL FCD-KL	ø25	6 to 12	5 to 11	1.5 or less	1.0 or less	7 to 12	3 or less	
	ø32	6 to 12	5 to 11			7 to 12		
	ø40	6 to 12	5 to 11			7 to 12		
	ø50	6 to 12	5 to 11			7 to 12		
	ø63	6 to 12	5 to 11			7 to 12		
Stopper cylinder ● Applicable switch: Proximity switch (T2□, T3□, T3P□, T2J□, T2W□, T3W□, T2Y□, T3Y□, T1□), reed switch (T0□, T5□, T8□)								
STK	ø20	3 to 8	4.5 to 8	1.5 or less	1.5 or less	6 to 14	3 or less	I-1491
	ø32	3 to 8	4.5 to 8			5 to 12		
	ø40	3 to 9	5 to 8.5			6 to 14		
	ø50	3 to 9	5.5 to 9.5			6 to 14		
Brake cylinder ● Applicable switch: Proximity switch (M2V, M3V, M3PV, M2WV, M3WV), reed switch (M0V, M5V)								
ULKP	ø16	5 to 9.5	4.5 to 9.5	1.5 or less	1.0 or less	5 to 9.5	3 or less	II-661
Brake cylinder ● Applicable switch: Proximity switch (T2□, T3□, T3P□, T2J□, T2W□, T3W□, T2Y□, T3Y□, T1□), reed switch (T0□, T5□, T8□)								
ULK	ø20	2.5 to 5.5	3.5 to 7.5	1.5 or less	1.0 or less	6.5 to 11	3 or less	II-661
	ø25	2.5 to 5.5	3.5 to 7.5			7.5 to 12		
	ø32	2.5 to 6	3.5 to 8			6.5 to 11.5		
	ø40	3 to 7	4 to 9			7.5 to 13.5		
Brake cylinder ● Applicable switch: Proximity switch (T2□, T3□, T3P□, T2J□, T2W□, T3W□, T2Y□, T3Y□, T1□), reed switch (T0□, T5□, T8□)								
JSK2	ø20	2.5 to 5.5	3.5 to 7.5	1.5 or less	1.0 or less	6.5 to 11	3 or less	II-691
	ø25	2.5 to 5.5	3.5 to 7.5			7.5 to 12		
	ø32	2.5 to 6	3.5 to 8			6.5 to 11.5		
	ø40	3 to 7	4 to 9			7.5 to 13.5		
Brake cylinder ● Applicable switch: Proximity switch (T2□, T3□, T3P□, T2J□, T2W□, T3W□, T2Y□, T3Y□, T1□), reed switch (T0□, T5□, T8□)								
JSM2	ø20	3 to 6	5 to 6.5	1.5 or less	1.0 or less	8.5 to 12	3 or less	II-710
	ø30	3 to 5.5	6 to 7			8 to 13		
	ø40	2.5 to 5.5	5.5 to 7.5			8.5 to 12.5		
Tie rod cylinder with brake ● Applicable switch: Proximity switch (T2□, T3□, T3P□, T2J□, T2W□, T3W□, T2Y□, T3Y□, T2YD, T1□), reed switch (T0□, T5□, T8□)								
JSG	ø32	2 to 7	6 to 9	1.5 or less	1.0 or less	6 to 11	3 or less	II-727
	ø40	2 to 7	6.5 to 9			7 to 12		
	ø50	2 to 7	7 to 10			7.5 to 12		
	ø63	2 to 7.5	7 to 10			8.5 to 13		
	ø80	2.5 to 8	7.5 to 10.5			9 to 13.5		
	ø100	2.5 to 8	8 to 11			9 to 14		

Cylinder switch

Operating range and hysteresis of each cylinder model with switch

(Unit: mm)

Model No.	Bore size (mm)	Proximity switch				Reed switch		Page
		Operating range		Hysteresis		Operating range	Hysteresis	
		1-color type	2-color type	1-color type	2-color type			
Brake cylinder	● Applicable switch: Proximity switch (T2□, T3□, T3P□, T2J□, T2W□, T3W□, T2Y□, T3Y□, T2YD, T1□), reed switch (T0□, T5□, T8□)							
JSC3 (Medium bore size)	ø40	2 to 7	3 to 10	1.5 or less	1.0 or less	5 to 12.5	3 or less	II-757
	ø50	2 to 7.5	3 to 10			5.5 to 13.5		
	ø63	2.5 to 7.5	3.5 to 10.5			5.5 to 14		
	ø80	3 to 8	4 to 11.5			6.5 to 14.5		
	ø100	3 to 8.5	4 to 11.5			6.5 to 15.5		
Brake cylinder	● Applicable switch: Strong magnetic field proof reed switch (H0□) * The values in ( ) indicate H0Y.							
JSC3-L2 (Medium bore size)	ø40	-		-		4 to 7.5(10.5 to 13.5)	3 or less	II-757
	ø50					4 to 7.5(11 to 14)		
	ø63					5 to 8(11.5 to 14.5)		
	ø80					5 to 8(10.5 to 14.5)		
	ø100					5 to 8(10.5 to 14.5)		
Brake cylinder	● Applicable switch: Proximity switch (T2□, T3□, T3P□, T2J□, T2W□, T3W□, T2Y□, T3Y□, T2YD, T1□), reed switch (T0□, T5□, T8□)							
JSC4 (Large bore size)	ø125	7.5 to 14	14 to 21	1.5 or less	1.0 or less	11 to 16	3 or less	II-757
	ø140	7.5 to 14	18 to 26			11 to 16		
	ø160	7.5 to 14	18 to 26			11 to 16		
	ø200	7.5 to 14	18 to 26			11 to 16		
Position locking compact cylinder	● Applicable switch: Proximity switch (T2□, T3□, T3P□, T2J□, T2W□, T3W□, T2Y□, T3Y□, T2YD, T1□), reed switch (T0□, T5□, T8□)							
USSD	ø20	3 to 8	4.5 to 8	1.5 or less	1.0 or less	6 to 14	3 or less	II-831
	ø25	3 to 9	4.5 to 8			5 to 14		
	ø32	3 to 8	4.5 to 8			5 to 12		
	ø40	3 to 9	5 to 8.5			6 to 14		
	ø50	3 to 9	5.5 to 9.5			6 to 14		
	ø63	3 to 9	5.5 to 9.5			7 to 15		
Free position locking flat cylinder	● Applicable switch: Proximity switch (M2□, M3□, M3P□, M2W□, M3W□), reed switch (M0□, M5□)							
UFCD	ø25	6 to 12	5 to 11	1.5 or less	1.0 or less	7 to 12	3 or less	II-875
	ø32	6 to 12	5 to 11			7 to 12		
	ø40	6 to 12	5 to 11			7 to 12		
	ø50	6 to 12	5 to 11			7 to 12		
	ø63	6 to 12	5 to 11			7 to 12		
Free position locking Medium bore size cylinder	● Applicable switch: Proximity switch (T2□, T3□, T3P□, T2J□, T2W□, T3W□, T2Y□, T3Y□, T2YD, T1□), reed switch (T0□, T5□, T8□)							
USC	ø40	2 to 7	3 to 10	1.5 or less	1.0 or less	5 to 12.5	3 or less	II-891
	ø50	2 to 7.5	3 to 10			5.5 to 13.5		
	ø63	2.5 to 7.5	3.5 to 10.5			5.5 to 14		
	ø80	3 to 8	4 to 11.5			6.5 to 14.5		
	ø100	3 to 8.5	4 to 11.5			6.5 to 15.5		
Free position locking Medium bore size cylinder	● Applicable switch: Reed switch for strong magnetic field (H0□) * The values in ( ) indicate H0Y.							
USC-L2	ø40	-		-	-	4 to 7.5(10.5 to 13.5)	3 or less	II-891
	ø50					4 to 7.5(11 to 14)		
	ø63					5 to 8(11.5 to 14.5)		
	ø80					5 to 8(10.5 to 14.5)		
	ø100					5 to 8(10.5 to 14.5)		
Guided cylinder	● Applicable switch: Proximity switch (F2□, F3□, F2Y□, F3Y□)							
STM	ø10	2.5 to 4.5	2.5 to 5.5	1.5 or less	1.5 or less	-	-	II-309
	ø16	2.5 to 4.5	2.5 to 5.5					

Operating range and hysteresis of each cylinder model with switch

(Unit: mm)

Model No.	Bore size (mm)	Proximity switch				Reed switch		Page
		Operating range		Hysteresis		Operating range	Hysteresis	
		1-color type	2-color type	1-color type	2-color type			
Guided cylinder ● Applicable switch: Proximity switch (T2□, T3□, T3P□, T2J□, T2W□, T3W□, T2Y□, T3Y□, T2YD, T1□), reed switch (T0□, T5□, T8□)								
STG	ø12	1.5 to 4.5	4 to 6	1.5 or less	1.5 or less	6 to 10	3 or less	II-329
	ø16	1.5 to 4.5	4 to 6			4 to 9		
	ø20	3 to 8	5 to 8.5			6 to 14		
	ø25	3 to 9	5 to 8.5			5 to 14		
	ø32	3 to 9	5 to 9			5 to 12		
	ø40	3 to 9	6 to 10			6 to 14		
	ø50	3 to 9	6 to 10			6 to 14		
	ø63	3 to 9	6 to 10			7 to 15		
	ø80	4 to 10	7 to 10			7 to 15		
Guided cylinder ● Applicable switch: Proximity switch (T2□, T3□, T3P□, T2J□, T2W□, T3W□, T2Y□, T3Y□, T2YD, T1□), reed switch (T0□, T5□, T8□)								
STS/L	ø8	1.5 to 3.5	4 to 6	1.5 or less	1.5 or less	5 to 9	3 or less	II-437
	ø12	1.5 to 4.5	4 to 6			6 to 10		
	ø16	1.5 to 4.5	4 to 6			4 to 9		
	ø20	3 to 8	5 to 8.5			6 to 14		
	ø25	3 to 9	5 to 8.5			5 to 14		
	ø32	3 to 8	5 to 9			5 to 12		
	ø40	3 to 9	6 to 10			6 to 14		
	ø50	3 to 9	6 to 10			6 to 14		
	ø63	3 to 9	6 to 10			7 to 15		
	ø80	4 to 10	7 to 10			7 to 15		
	ø100	2 to 9	7 to 10			7 to 15		
Linear slide cylinder ● Applicable switch: Proximity switch (F2□, F3□, F2Y□, F3Y□)								
LCW	ø12	3.5 to 6.5	4.5 to 6.5	1.0 or less	1.0 or less	-	-	II-5
Linear slide cylinder ● Applicable switch: Proximity switch (T2□, T3□, T2W□, T3W□), reed switch (T0□, T5□)								
LCW	ø16	3 to 5	4 to 5.5	1.0 or less	1.0 or less	6.5 to 9.5	3.0 or less	II-5
	ø20	4.5 to 6.5	5.5 to 6.5			8 to 12		
Linear slide cylinder ● Applicable switch: Proximity switch (F2□, F3□, F2Y□, F3Y□)								
LCR	ø6	2 to 4	2.5 to 5.5	1.0 or less	1.0 or less	-	-	II-55
	ø8		3.5 to 6					
	ø12		3 to 4.5					
Linear slide cylinder ● Applicable switch: Proximity switch (T2□, T3□, T2W□, T3W□), reed switch (T0□, T5□)								
LCR	ø16	2 to 4	3 to 4.5	1.0 or less	1.0 or less	5 to 9	1.0 or less	II-55
	ø20	2 to 5.5	4 to 5.5			6.5 to 11		
	ø25	2.5 to 6	3.5 to 6			8 to 12		
Linear slide cylinder ● Applicable switch: Proximity switch (F2□, F3□, F2Y□, F3Y□)								
LCG	ø6	2 to 4	2.5 to 5.5	1.0 or less	1.0 or less	-	-	II-137
	ø8		3.5 to 6					
	ø12		3 to 4.5					
Linear slide cylinder ● Applicable switch: Proximity switch (T2□, T3□, T2W□, T3W□), reed switch (T0□, T5□)								
LCG	ø16	2 to 4	3 to 4.5	1.0 or less	1.0 or less	5 to 9	1.0 or less	II-137
	ø20	2 to 5.5	4 to 5.5			6.5 to 11		
	ø25	2.5 to 6	3.5 to 6			8 to 12		
Linear slide cylinder ● Applicable switch: Proximity switch (T2□, T3□, T2W□, T3W□), reed switch (T0□, T5□)								
LCX	ø25	0.5 to 6	1.0 to 5.5	2 or less	2 or less	2 to 10.5	3.5 or less	II-201
	ø32	1.0 to 5.5	0.5 to 5.0			1 to 11		

Operating range and hysteresis of each cylinder model with switch

(Unit: mm)

Model No.	Bore size (mm)	Proximity switch				Reed switch		Page
		Operating range		Hysteresis		Operating range	Hysteresis	
		1-color type	2-color type	1-color type	2-color type			
Linear slide cylinder ● Applicable switch: Proximity switch (F2□, F3□, F2Y□, F3Y□)								
LCM	ø4.5	1 to 3	2 to 4	1.0 or less	1.0 or less	-	-	II-261
	ø6							
	ø8							
Twin rod cylinder ● Applicable switch: Proximity switch (K2□, K3□, K3P□, K2Y□, K3Y□), reed switch (K0□, K5□)								
STR2	ø6	1 to 6	4 to 7.5	2.0 or less	1.5 or less	4 to 9(STR2-M)	3.0 or less	II-567
	ø10	1 to 5.5	4 to 7.5			4 to 9(STR2-M)		
	ø16	1.5 to 7.5	4.5 to 9			5 to 12.5		
	ø20	3 to 9	5.5 to 10			6.5 to 14.5		
	ø25	3.5 to 10.5	6.5 to 10.5			8 to 14.5		
	ø32	-	-			-		
Unit cylinder ● Applicable switch: Proximity switch (T2□, T3□), reed switch (T0□, T5□)								
UCA2-*L	ø10	1.5 to 4	-	1.5 or less	-	4.5 to 8	3.0 or less	II-625
	ø16							
	ø25							
	ø32							
Hi energy absorption cylinder ● Applicable switch: Proximity switch (T2□, T3□, T3P□, T2J□, T2W□, T3W□, T2Y□, T3Y□, T2YD, T1□), reed switch (T0□, T5□, T8□)								
HCM	ø20	3 to 8	4.5 to 9	1.5 or less	1.0 or less	6 to 14	3 or less	I-941
	ø25	3 to 9	5 to 9			5 to 14		
	ø32	3 to 8	5 to 9			5 to 12		
	ø40	3 to 9	5.5 to 9.5			6 to 14		
	ø50	3 to 9	6 to 10			6 to 14		
	ø63	3 to 9	6 to 10.5			7 to 15		
High speed cylinder ● Applicable switch: Proximity switch (R1, R2, R3, R2Y, R3Y), reed switch (R0, R4, R5, R6)								
HCA	ø20	6 to 14	11 to 18	1.5 or less	1.0 or less	7 to 14	3.0 or less	I-959
	ø25	6 to 14	11 to 18			8 to 13		
	ø32	6 to 14	11 to 18			9 to 14		
	ø50	6 to 14	11 to 18			9 to 14		
Rodless cylinder ● Applicable switch: Proximity switch (M2□, M3□, M3P□, M2WV, M3WV), reed switch (M0□, M5□)								
SRL3	ø12	4 to 13	4 to 12	1.5 or less	1.0 or less	3 to 11	3.0 or less	I-1551
	ø16	4 to 13	4 to 12	1.5 or less	1.0 or less	3 to 11		
	ø20	4 to 13	4 to 12	1.5 or less	1.0 or less	3 to 11		
	ø25	9.5 to 15.5	9 to 14	2.0 or less	1.5 or less	8.5 to 13.5	3.5 or less	
	ø32	7.5 to 15	8 to 14	2.0 or less	1.5 or less	7 to 13.5		
	ø40	11.5 to 17.5	10 to 16.5	2.0 or less	1.5 or less	10 to 16		
	ø50	11 to 24	17 to 27	2.5 or less	1.5 or less	17 to 27	3.0 or less	
	ø63	11 to 24	17 to 27	2.5 or less	1.5 or less	17 to 27		
	ø80	26.5 to 45.5	16.5 to 40	5.0 or less	3.0 or less	20.5 to 41		
	ø100	25.5 to 40.5	21.5 to 36	3.0 or less	2.5 or less	24 to 37		
Rodless cylinder ● Applicable switch: Proximity switch (T2W□, T3W□, T2YD)								
SRL3	ø12	-	2 to 7	-	1.0 or less	-	-	I-1551
	ø16	-	2 to 7					
	ø20	-	3 to 8	-	1.5 or less			
	ø25	-	3 to 10					
	ø32	-	3 to 10					
	ø40	-	4 to 11					
	ø50	-	9 to 16					
	ø63	-	9 to 16					
	ø80	-	10 to 24	-	2.0 or less			
	ø100	-	10 to 24					

Operating range and hysteresis of each cylinder model with switch

(Unit: mm)

Model No.	Bore size (mm)	Proximity switch				Reed switch		Page
		Operating range		Hysteresis		Operating range	Hysteresis	
		1-color type	2-color type	1-color type	2-color type			
High precision guided rodless cylinder	● Applicable switch: Proximity switch (M2□, M3□, M3P□, M2WV, M3WV), reed switch (M0□, M5□)							
SRG3	ø12	4 to 13	4 to 12	1.5 or less	1.0 or less	3 to 11	3.0 or less	I-1627
	ø16	4 to 13	4 to 12			3 to 11		
	ø20	9.5 to 15.5	9 to 14	2.0 or less	1.5 or less	3 to 11		
	ø25	9.5 to 15.5	9 to 14			8.5 to 13.5	3.5 or less	
High precision guided rodless cylinder	● Applicable switch: Proximity switch (T2W□, T3W□, T2YD)							
SRG3	ø12	-	2 to 7	-	1.0 or less	-	-	I-1627
	ø16	-	2 to 7					
	ø20	-	3 to 8	-	1.5 or less			
	ø25	-	3 to 10					
High precision guided rodless cylinder	● Applicable switch: Proximity switch (T2Y□, T3Y□, T2W□, T3W□, T2YD), reed switch (T0□, T5□, T8□)							
SRM3	ø25	-	6 to 9	-	1.0 or less	5.5 to 11	2.0 or less	I-1655
	ø32	-	6.5 to 9			5.5 to 10		
	ø40	-	7.5 to 10.5			5.5 to 9		
	ø63	-	8 to 11			5.5 to 10		
Rodless cylinder with brake	● Applicable switch: Proximity switch (M2□, M3□, M3P□, M2WV, M3WV), reed switch (M0□, M5□)							
SRT3	ø12	4 to 13	4 to 12	1.5 or less	1.0 or less	3 to 11	3.0 or less	I-1685
	ø16	4 to 13	4 to 12			3 to 11		
	ø20	4 to 13	4 to 12			3 to 11		
	ø25	9.5 to 15.5	9 to 14	2.0 or less	1.5 or less	8.5 to 13.5	3.5 or less	
	ø32	7.5 to 15	8 to 14			7 to 13.5		
	ø40	11.5 to 17.5	10 to 16.5			10 to 16		
	ø50	16.5 to 24	14 to 21			14.5 to 21.5		
	ø63	16 to 24	14 to 21			14 to 21.5		
Rodless cylinder	● Applicable switch: Proximity switch (T2W□, T3W□, T2YD)							
SRT3	ø12	-	2 to 7	-	1.0 or less	-	-	I-1685
	ø16	-	2 to 7					
	ø20	-	3 to 8	-	1.5 or less			
	ø25	-	3 to 10					
	ø32	-	3 to 10					
	ø40	-	4 to 11					
	ø50	-	9 to 16					
	ø63	-	9 to 16					
Magnet rodless cylinder	● Applicable switch: Proximity switch (T2□, T3□, T3P□, T2W□, T3W□, T2Y□, T3Y□, T1□)							
MRL2	ø6	2 to 5	5.5 to 6.5	1.0 or less	1.0 or less	-	-	I-1713
	ø10	2.5 to 5.5	6 to 7.5					
	ø16	2 to 5	5.5 to 7					
	ø20	2 to 5	6 to 5.5					
	ø25	2 to 5	6 to 5.5					
	ø32	2 to 4.5	5.5 to 6.5					
Magnet rodless cylinder with high precision guide	● Applicable switch: Proximity switch (T2□, T3□, T3P□, T2W□, T3W□,T2Y□, T3Y□, T1□), reed switch (T0□, T5□)							
MRG2	ø10	2 to 4.5	5.5 to 7	0.5 or less	0.5 or less	6.5 to 7.5	1 or less	I-1745
	ø16	2 to 5	6 to 7.5			7 to 8	2 or less	
	ø25	2 to 5	6 to 7			7.5 to 8	2 or less	

Operating range and hysteresis of each cylinder model with switch

(Unit: mm)

Model No.	Bore size (mm)	Proximity switch				Reed switch		Page
		Operating range		Hysteresis		Operating range	Hysteresis	
		1-color type	2-color type	1-color type	2-color type			
Clamp cylinder ● Applicable switch: Proximity switch (T2□, T3□, T3P□, T2J□, T2W□, T3W□, T2Y□, T3Y□, T2YD, T1□), reed switch (T0□, T5□, T8□)								
CAC4	ø40	2 to 6.5	5.7 to 6.5	1.5 or less	1.0 or less	6.7 to 10.8	3 or less	II-989
	ø50	2.5 to 6.0	5.9 to 6.8			7.8 to 11.3		
	ø63	2.5 to 6	6.1 to 6.8			8.2 to 11.4		
	ø80	3 to 7	7.7 to 8.5			9 to 10.9		
Clamp cylinder ● Applicable switch: Reed switch for strong magnetic field (H0□)								
CAC4-L2	ø40	-		-	-	6.7 to 10.8	3 or less	II-989
	ø50					7.8 to 11.3		
	ø63					8.2 to 11.4		
	ø80					6.6 to 7.5		
Clamp cylinder ● Applicable switch: Proximity switch (T2□, T3□, T3P□, T2J□, T2W□, T3W□, T2Y□, T3Y□, T2YD, T1□), reed switch (T0□, T5□, T8□)								
UCAC2	ø50	2.5 to 6.0	5.9 to 6.8	1.5 or less	1.0 or less	7.8 to 11.3	3 or less	II-1013
	ø63	2.5 to 6.5	6.1 to 6.8			8.2 to 11.4		
Clamp cylinder ● Applicable switch: Reed switch for strong magnetic field (H0□)								
UCAC2-L2	ø50	-		-	-	7.8 to 11.3	3 or less	II-1013
	ø63					8.2 to 11.4		
Lightweight clamp cylinder ● Applicable switch: Proximity switch (T2□, T3□, T3P□, T2J□, T2Y□, T3Y□, T2YD, T1□), reed switch (T0□, T5□, T8□)								
CAC	ø32	2.5 to 6	3.5 to 8	1.5 or less	1.0 or less	6.5 to 11.5	3 or less	II-1027
	ø40	3 to 7	4 to 9			7.5 to 13.5		
Position locking, lightweight clamp cylinder ● Applicable switch: Proximity switch (T2□, T3□, T3P□, T2J□, T2Y□, T3Y□, T2YD, T1□), reed switch (T0□, T5□, T8□)								
UCAC	ø32	2.5 to 6	3.5 to 8	1.5 or less	1.0 or less	6.5 to 11.5	3 or less	II-1027
	ø40	3 to 7	4 to 9			7.5 to 13.5		
Rotary clamp cylinder ● Applicable switch: Proximity switch (T2□, T3□, T3P□, T2J□, T2Y□, T3Y□, T2YD, T1□), reed switch (T0□, T5□, T8□)								
RCS2	ø12	1.5 to 5.5	3 to 6	1.5 or less	1.0 or less	5 to 8	3 or less	
	ø16	1.5 to 4.5	3 to 7			4 to 9		
	ø20	3 to 8	4.5 to 8			6 to 14		
	ø25	3 to 9	4.5 to 8			5 to 14		
	ø32	3 to 8	4.5 to 8			5 to 12		
	ø40	3 to 9	5 to 8.5			6 to 14		
	ø50	3 to 9	5.5 to 9.5			6 to 14		
	ø63	3 to 9	5.5 to 9.5			7 to 15		
Rotary clamp cylinder ● Applicable switch: Proximity switch (T2□, T3□, T3P□, T2W□, T3W□, T2Y□, T3Y□, T2YD), reed switch (T0□, T5□)								
RCC2	ø16	2 to 5	3 to 7	1.5 or less	1.0 or less	4 to 9	3 or less	II-1047
	ø20	3 to 8	4.5 to 8			6 to 14		
	ø25	3 to 9	4.5 to 8			5 to 14		
	ø32	3 to 8	4.5 to 8			5 to 12		
	ø40	3 to 9	5 to 8.5			6 to 14		
	ø50	3 to 9	5.5 to 9.5			6 to 14		
	ø63	3 to 9	5.5 to 9.5			7 to 15		
Rotary clamp cylinder ● Applicable switch: Proximity switch (T2□, T3□, T2W□, T3W□), reed switch (T0□, T5□)								
RCS	ø16	2 to 5	3 to 7	1.5 or less	1.0 or less	4 to 9	3 or less	II-1069

Operating range and hysteresis of each cylinder model with switch

Model No.	Bore size (mm)	Proximity switch				Reed switch		Page
		Operating range		Hysteresis		Operating range	Hysteresis	
		1-color type	2-color type	1-color type	2-color type			
High power cylinder ● Applicable switch: Proximity switch (R1, R2, R3, R2Y, R3Y), reed switch (R0, R4, R5, R6)								
SHC	ø40	6.5 to 11.5		1.5 or less		9.5 to 12.5	3.0 or less	II-1095
	ø50	8 to 12.5				10.5 to 14.5		
	ø63	7.5 to 12.5				10.5 to 14.5		
	ø80	8 to 13.5				11.5 to 15.5		
	ø100	8 to 14				12 to 16		
High power cylinder ● Applicable switch: Reed switch (H0)								
SHC-L2	ø40	-		-		4 to 7	3.0 or less	II-1095
	ø50					5 to 7.5		
	ø63					5 to 8		
	ø80					5 to 8		
	ø100					5 to 8		
Mechanical power cylinder ● Applicable switch: Proximity switch (T2□, T3□, T3P□, T2J□, T2W□, T3W□, T2Y□, T3Y□, T1□), reed switch (T0□, T5□, T8□)								
MCP-S	2t	4 to 10	6 to 10	1.5 or less	1.0 or less	7 to 15	3 or less	II-1033
	5t	4 to 10	8 to 10			9 to 15		
MCP-W (rapid feed part)	2t	3.5 to 6.0	4.6 to 9.2	1.5 or less	1.0 or less	7.6 to 12.8	3 or less	
	5t	4.0 to 8	5.5 to 11.9			8.9 to 14.1		
Guideless cylinder ● Applicable switch: Proximity switch (R1, R2, R3, R2Y, R3Y), reed switch (R0, R4, R5, R6)								
GLC	ø40	7 to 17		1.5 or less		11.5 to 16.5	3.0 or less	II-1151
	ø50	9 to 17				13 to 18		
	ø63	10 to 18				15 to 20		
	ø80	8 to 19				15 to 20		
	ø100	11 to 20.5				13.5 to 19		
Guideless cylinder ● Applicable switch: Reed switch (H0)								
GLC-L2	ø40	-		-		4 to 9	3.0 or less	II-1151
	ø50					4 to 9		
	ø63					4 to 10		
	ø80					5 to 11		
	ø100					5 to 11		
Rotary actuator ● Applicable switch: Proximity switch (T2□, T3□, T2W□, T3W□, T2Y□, T3Y□, T1□), reed switch (T0□, T5□, T8□)								
RRC	8	15° to 60°	20° to 70°	-	-	70° to 90°	-	II-1241
	32	10° to 30°	10° to 30°			30° to 40°		
	63	10° to 30°	10° to 30°			30° to 40°		
Table rotary actuator ● Applicable switch: Proximity switch (T2□, T3□, T2W□, T3W□, T2Y□, T3Y□, T1□)								
GRC	5	10° to 35°	30° to 40°	-	-	-	-	II-1255
	10	5° to 30°	20° to 30°					
	20	10° to 35°	25° to 35°					
	30	5° to 25°	15° to 25°					
	50	5° to 25°	15° to 25°					
	80	5° to 25°	15° to 25°					
Compact rotary actuator ● Applicable switch: Proximity switch (SR-□)								
RV3*	3	15°±7°	-	3° or less	-	-	-	II-1293
	10	15°±7°	-					
	20	15°±7°	-					
	30	15°±7°	-					
Compact rotary actuator ● Applicable switch: Proximity switch (FR-□)								
RV3*	3	23°±7°	-	2° or less	-	-	-	II-1293
	10	23°±7°	-					
	20	23°±7°	-					
	30	23°±7°	-					
Large rotary actuator ● Applicable switch: Proximity switch (M2V, M3V, M3PV), reed switch (M0V, M5V)								
RV3*	50	Approx. 40°	-		-	Approx. 25°	-	II-1293
	150	Approx. 25°	-			Approx. 15°		
	300	Approx. 25°	-			Approx. 15°		
	800	Approx. 25°	-			Approx. 15°		

⚠CAUTION Relocation of switch

Tie rod mounting

Loosening the two set screws for fixing the mounting base by 1/2 to 3/4 turns allows you to move the switch axially without fallout.
After adjustment, lightly press the holder so that the switch contacts the tube, and tighten the set screw.
Tightening torque is 1.7 to 2.0 N·m. It is tightened enough if the Allen wrench begins to bend.

● Movement and tightening diagram

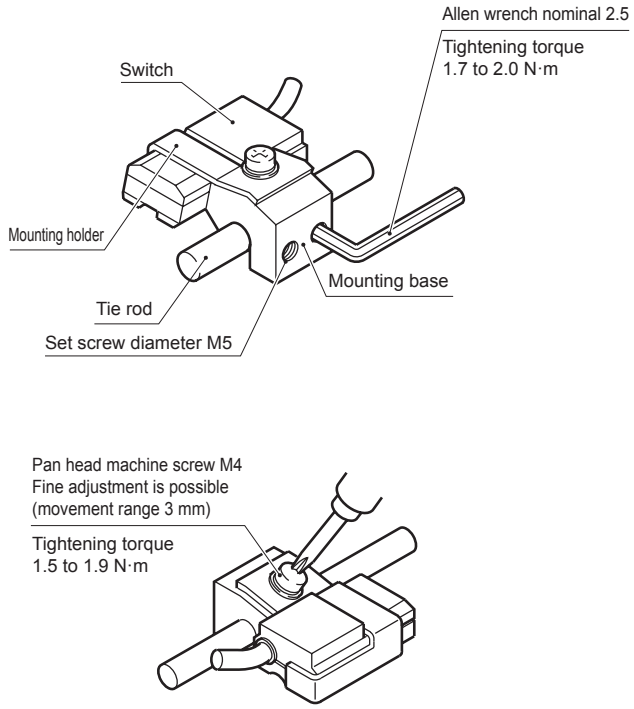

Band mounting

(1) When moving the switch position to the stroke length direction

● The 1-color display switch can be fine-tuned by ±3 mm from the default. If the adjusting range exceeds ±3 mm, or when fine-tuning the 2-color display switch, move the band position.

● The switch bracket rail has a marking 4 mm from the rail end. Use as a guide to the mounting position when replacing the switch. Switch rail markings are set to the default switch max. sensitivity position. The max. sensitivity position will change when the switch is changed or when the band is moved. Adjust the position accordingly in this case.

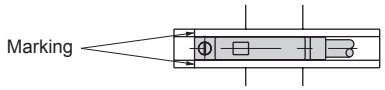

(2) When moving the switch position to the circumferential direction

● Loosen the band fixing screw, shift the switch rail in the circumferential direction, then tighten at the specified position. Tightening torque is 0.8 to 1.0 N·m.

(3) Shifting the band position

● Loosen the band fixing screw, shift the switch rail and band along the cylinder tube, and tighten at the specified position. Tightening torque is 0.8 to 1.0 N·m.

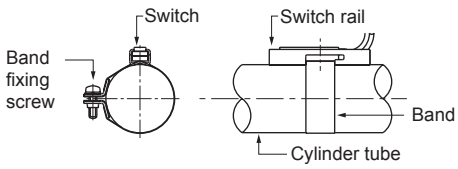

Band mounting

Loosen the fixing screw (pan head machine screw), move the body and band along the cylinder tube, and tighten the screw at the specified position. For fine adjustment, fix the band position and move only the switch body. Tightening torque is 0.5 to 0.7N·m.
Tightening torque for HCA ø80 and ø100 is 1.0 to 1.5 N·m.

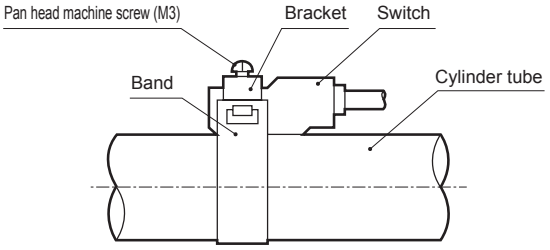

Switch groove mounting

Loosen the fixing screw (set screw), move the switch body along the switch groove, and tighten the screw at the specified position.
When using T2, T2W, T3, T3W, T0, T5, K2, K3, K0 or K5, use a flathead screwdriver (clockwork screwdriver, precision screwdriver, etc.) with a 5 to 6 mm grip diameter, a 2.4 mm or smaller tip and thickness 0.3 mm or less to tighten the screws with a tightening torque of 0.1 to 0.2 N·m.
When using T*C, T2J, T2Y, T3Y, K2Y, K3Y, T2YD, T1, T8, T2YL, T3YL or ET0, tighten with a tightening torque of 0.5 to 0.7 N·m.
When using F2*, F3*, F2Y* or F3Y*, tighten with a tightening torque of 0.03 to 0.08 N·m.

T2YD Tie rod mounting

(1) Fine adjustment

Loosen the slotted hex socket bolt Ⓐ, move only the switch body, and fix at the required position. Tightening torque is 0.5 to 0.7 N·m.

(2) Rough adjustment

Completely loosen the slotted bolt Ⓐ and set screws, and move the entire mounting bracket to the required position. Tighten the slotted bolt Ⓐ. Tightening torque is 0.5 to 0.7 N·m.
Then tighten the set screw. Tightening torque is 1.7 to 2.0 N·m.

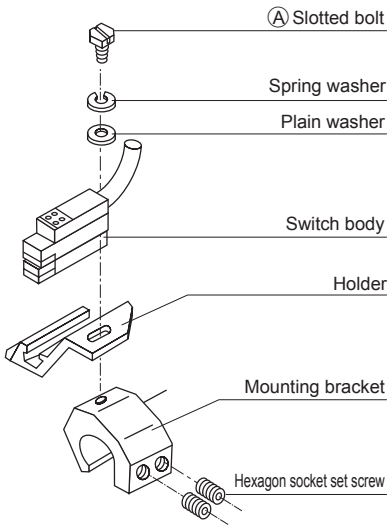

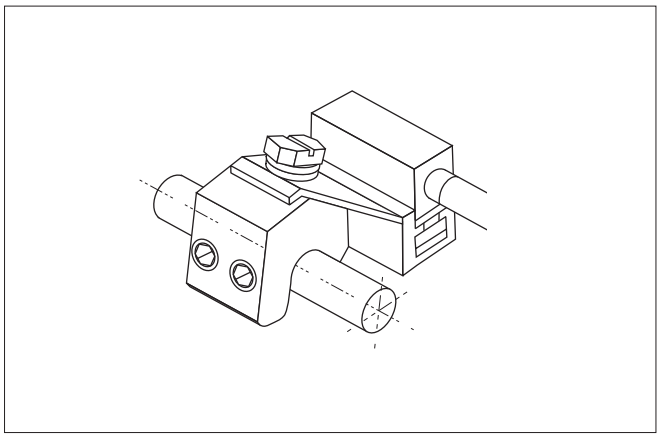

⚠ Notes for contact protection circuits (SKAC and SKDC)

If a reed switch is used and load falls under any of the following conditions, the contact may be kept on and the service life may become shorter. To prevent that, connect a contact protection circuit within 2 m from the switch.

- When the work load is an inductive load (relay, valve, etc., (coil-drive load)) or capacitance load (programmable controller, etc., (load including capacitor))
- When the lead wire lengths are as follows
  - 12 VDC : 100 m or more
  - 24 VDC : 50 m or more
  - 100 VAC : 20 m or more
  - 200 VAC : 10 m or more
- When overvoltage or overcurrent may occur due to other causes

For details on contact protection circuits, refer to Ending Page 27.

How to install the product to R*B terminal box

See the figure below and follow the following procedure to connect with the R*B terminal box.

(1) Remove the fixing screw completely and pull out the terminal box from the switch.
(2) Push out the pin support from the top of the case to separate the case and pin support.
(3) Remove the cap and take out the washer and gasket.
(4) Determine the direction to draw the lead wire from the terminal box.
(5) Refer to the top view of the case mounting orientation, and cut the lead wire based on the lead-out direction. Then strip the seal/sheath.
(6) Crimp the included terminal.
(7) Pass the lead wire through in the sequence of cap, washer, gasket, and case with attention to the orientation. Insert the lead wire into the case and pull it out with needle-nose pliers.
(8) Insert the terminal into the pin support and at the same time, push them into the case making sure of their direction. Push them until the upper end rib of the pin support comes out of the top of the case.
(9) Insert the fixing screw into the case and pin support.
(10) Insert the gasket and washer into the case and fix them by tightening the cap.
(11) Set the case to the switch terminal and fix it with the fixing screw.

● Lead cutting length

The lead cutting length differs with the case mounting orientation. Refer to the following table.

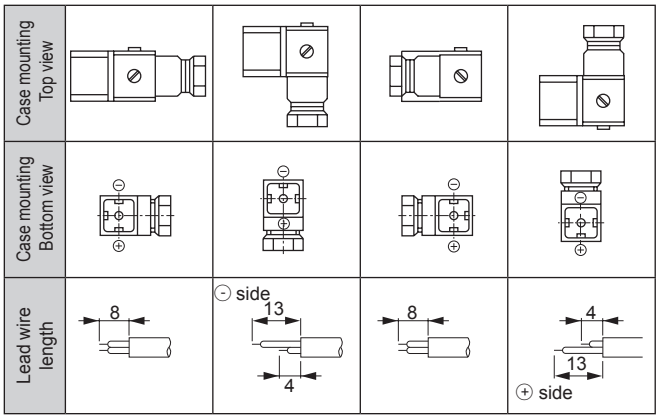

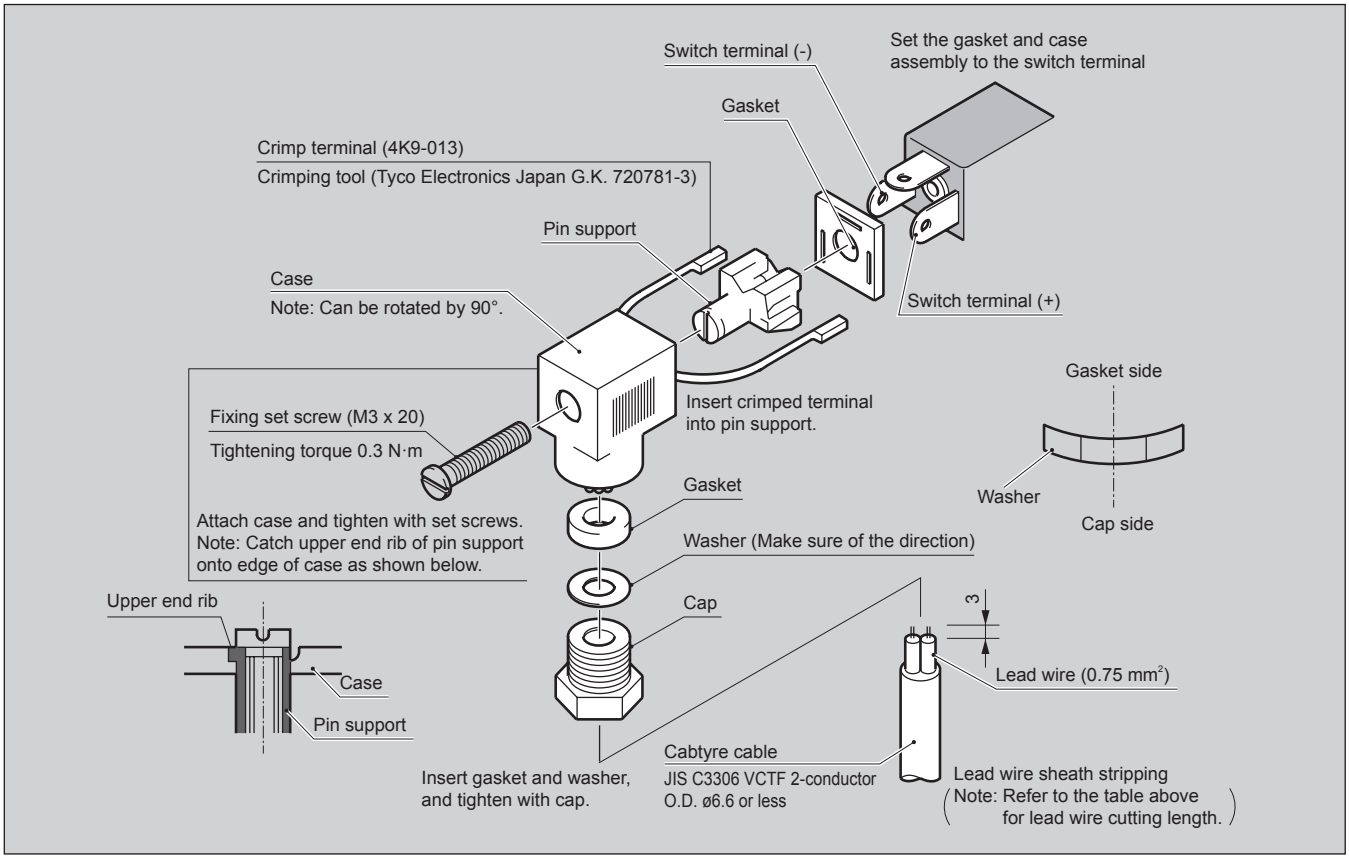

How to install the product to E0 terminal box

Prepare a heat-resistant cabtyre cable and flexible tube, and wire to the terminal box with reference to the figure below. The MAS insert, MAS holder, and cap nut are included as accessories.

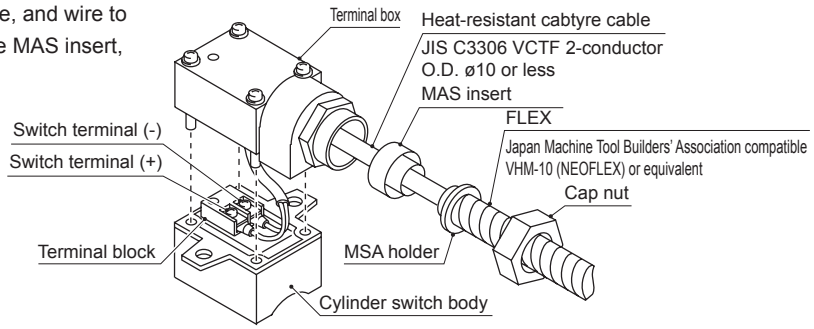

When selecting a cylinder switch, first, check whether reed or proximity switch is used, then follow the selection chart below.

Cylinder switch selection chart

Applicable switches

Reed

1 Applications

2 Working voltage

3 Load current

4 Indicator lamp

5 How to wire

6 Lead wire length

Proximity

1 Applications

2 Working voltage

3 Load current

4 2-wire/3-wire

5 2-color display

6 How to wire

7 Lead wire length

Applicable switches

Applications

Programmable controller
IC circuit
Relay
Small solenoid valve

Working voltage

5 VDC, 12 VDC, 24 VDC
100 VAC, 200 VAC

Load current

5 to 200 mA

2-wire/3-wire (proximity only)

2-wire: Wiring work-hours can be reduced drastically.
3-wire: No current leakage, small internal voltage drop, wide applications and large load current

Indicator lamp (reed only)

With indicator lamp { Lit when ON / Lit when OFF
Without indicator lamp

2-color display

2-color display: Color indicator instantaneously shows the ideal installation position, enabling instant installation.

How to wire

Grommet lead wire: Standard
With terminal box connector: Easy maintenance.

Lead wire length

1 m: Standard
3 m
5 m

Troubleshooting [Cylinder switch] (1)

Trouble	Cause	Factor
The switch remains ON and output does not stop * Load · Programmable controller · Relay · Others	Load was short-circuited.	Internal circuit damage of switch
	A load current exceeding catalog value was conducted	
	A load voltage or power supply voltage exceeding catalog values was applied	
	The connection is incorrect	Malfunction caused by miswiring
		Internal circuit damage caused by mis-wiring (AC, DC, polarity, etc.)
	Long wire length (refer to Intro Page 80 of the catalog)	Internal circuit damage of switch
	Surge voltage is generated due to connection of an inductive load (relay, solenoid valve)	Internal circuit damage of switch
	With the proximity switch, a servomotor, or robot, etc., may be generating noise within the same equipment	Noise is applied
	The power and signal cables are wired together	
	The same power supply as the noise source is used	
	The cylinder switch installation position does not match the piston stop position	The position is adjusted incorrectly
		The installation position has deviated due to a loose screw
		The mounting orientation is in reverse
	The ambient temperature is -10°C or less	The magnetic force of the piston magnet in the cylinder has increased
	Water or oil, etc., comes in contact with the cylinder switch	Water or oil entered the cylinder switch and damaged the internal circuit
	Water or oil enters the relay box of the lead wire and comes in contact with the terminal of the load	Malfunction caused by entry of water or oil
	A magnetic field is generated in the area · Spot welding machine · Magnetizer, etc.	Cylinder switch is reacting to an external magnetic field
	There is a magnetic substance in the area	There is an iron bolt nearby
		There is a magnetic substance near the cylinder switch
		Iron chips accumulated around the cylinder switch
	External force was applied to the cylinder switch	Internal circuit damage of switch

Countermeasures
(1) Replace the cylinder switch and select a cylinder switch with maximum rating matching the load rating
(1) Connect correctly
(1) Replace the cylinder switch and connect correctly
(1) Replace the cylinder switch and wire the protective circuit (Refer to Intro Pages 80 and 82)
(1) Replace the cylinder switch and wire the protective circuit (Refer to Intro Pages 80 and 82)
(1) Add a noise filter or replace with a reed switch
(2) Separate the power cable and signal cable
(3) Separate the power source
(1) Adjust the position again
(1) Tighten within the specified tightening torque range
(1) Mount in the correct direction
(1) Raise the ambient temperature to -10°C or higher
(1) Change from standard cylinder switch to T□YL of coolant proof specifications (T type switch only)
(2) Replace the cylinder switch, and provide a partition so that water and oil do not make excessive contact.
(1) Set a partition so water and oil do not come in contact with the relay box, or place the relay box in a waterproof box
(1) Change to a strong magnetic field proof switch. The cylinder body must also be changed to one for strong magnetic fields
(2) Check that magnetic fields are not applied a. Move the magnetic field generator away. b. Set a magnetic material partition between the magnetic field origin and cylinder switch
(3) Provide magnetic shield
(1) Replace with a stainless steel bolt
(2) Mount the cylinder switch on a surface distanced from the iron bolt
(1) Separate the cylinder switch from the magnetic substance to the value recommended in the catalog
(2) Mount the cylinder switch on a surface distanced from the magnetic substance
(3) Change the magnetic substance's material to a nonmagnetic material such as stainless steel, aluminum, copper, etc.
(1) Remove iron chips
(1) Replace the cylinder switch and check that external force is not applied to the cylinder switch

Troubleshooting [Cylinder switch] (2)

Trouble	Cause	Factor
The cylinder switch turns ON/OFF but the load remains ON	The relation of the cylinder switch leakage current and load input specifications is Leakage current > OFF current	The load reacts to the leakage current.
		Leakage current increases because of the parallel connection (Refer to Intro Page 81 of the catalog)
The output correctly turns ON/OFF but the indicator lamp does not turn on	The wiring poles are reversed (only when using reed □0 with DC).	Malfunction caused by miswiring

Countermeasures
(1) Change the cylinder switch from □2 to □0 or □3 type
(2) Change the cylinder switch to one with a large load OFF current value
(3) Wire the bleeder resistance

* Select a programmable controller or relay, etc., that does not malfunction due to proximity switch leakage current.
* For the load input specifications, check the model No. and contact the manufacturer or CKD.

(1) Wire normally

Troubleshooting [Cylinder switch] (3)

Trouble	Cause	Factor
Cylinder switch does not turn ON There is no output Load does not react	The applied voltage is incorrect	Internal circuit damage of switch
	Load was short-circuited	Internal circuit damage of switch
	A load current exceeding catalog value was conducted	
	A load voltage or power supply voltage exceeding catalog values was applied	
	The connection is incorrect	The switch is not operational due to miswiring
		Internal circuit damage caused by mis-wiring (AC, DC, polarity, etc.)
	Excessive bending is applied to the lead wire	Disconnection of lead wire
	Excessive tension is applied to the lead wire	Disconnection of lead wire
	Long wire length (refer to Intro Page 80 of the catalog)	Internal circuit damage of switch
	Surge voltage is generated due to connection of an inductive load (relay, valve)	Internal circuit damage of switch
	With the proximity switch, a servomotor, or robot, etc., may be generating noise within the same equipment	Noise is applied
	The power and signal cables are wired together	
	The same power supply as the noise source is used	
	The cylinder switch installation position does not match the piston stop position	The position is adjusted incorrectly
		The installation position has deviated due to a loose screw
		The mounting orientation is in reverse
	The ambient temperature exceeds 60°C	The magnetic force of the piston magnet in the cylinder has weakened
	Water or oil, etc., comes in contact with the cylinder switch	Water or oil entered the cylinder switch and damaged the internal circuit
	Water or oil enters the relay box of the lead wire and comes in contact with the terminal of the load	Internal circuit abnormality caused by entry of water or oil
	A magnetic field is generated in the area · Spot welding machine · Magnetizer, etc.	Cylinder switch does not react due to the effect of peripheral magnetic fields
	There is a magnetic substance in the area	There is an iron bolt nearby
		There is a magnetic substance near the cylinder switch
		Iron chips accumulated around the cylinder switch
	External force was applied to the cylinder switch	Internal circuit damage of switch

* Load
· Programmable controller
· Relay
· Others

Countermeasures
(1) Replace the cylinder switch and set the correct rated voltage
(2) Replace with a cylinder switch in correct rated voltage
(1) Replace the cylinder switch and select a cylinder switch with maximum rating matching the load rating
(1) Connect correctly
(1) Replace the cylinder switch and connect correctly
(1) Replace the cylinder switch and provide a sufficient bending radius (9 mm or over) for the lead wire so that one location is not subject to excessive bending
(2) Change the cylinder switch to T2□R type with elasticity specifications (T type switch only)
(1) Replace the cylinder switch, and take measures to prevent excessive tension from being applied
(1) Replace the cylinder switch and wire the protective circuit (Refer to Intro Pages 80 and 82)
(1) Replace the cylinder switch and wire the protective circuit (Refer to Intro Pages 80 and 82)
(1) Add a noise filter or replace with a reed switch
(2) Separate the power cable and signal cable
(3) Separate the power source
(1) Adjust the position again
(1) Tighten within the specified tightening torque range
(1) Mount in the correct direction
(1) Lower the ambient temperature to 60°C or less
(2) Replace with a heat-resistant cylinder switch (Refer to the catalog for compatible models)
(1) Change from standard cylinder switch to T□YL of coolant proof specifications (T type switch only)
(2) Replace the cylinder switch, and provide a partition so that water and oil do not make excessive contact
(1) Set a partition so water and oil do not come in contact with the relay box, or place the relay box in a waterproof box
(1) Change to a strong magnetic field proof switch. The cylinder body must also be changed to one for strong magnetic fields
(2) Check that magnetic fields are not applied a. Move the magnetic field generator away. b. Set a magnetic material partition between the magnetic field origin and cylinder switch
(3) Provide magnetic shield
(1) Replace with a stainless steel bolt
(2) Mount the cylinder switch on a surface distanced from the iron bolt
(1) Separate the cylinder switch from the magnetic substance to the value recommended in the catalog
(2) Mount the cylinder switch on a surface distanced from the magnetic substance
(3) Change the magnetic substance's material to a nonmagnetic material such as stainless steel, aluminum, copper, etc.
(1) Remove iron chips
(1) Replace the cylinder switch and check that external force is not applied to the cylinder switch

Troubleshooting [Cylinder switch] (4)

Trouble	Cause	Factor
The cylinder switch indicator lamp turns ON but the load does not operate	The relation of the cylinder switch voltage drop and load input specifications is: (power supply voltage - internal voltage drop) < min. working voltage	The load and cylinder switch do not match
		Internal voltage drop caused by serial connection (Refer to Intro Page 81)
	When using 3-wire, the programmable controller (PLC) input specifications (source input, sink input) do not match	The cylinder switch's signals are not received
	Cylinder switch output is set to the middle of the air cylinder stroke	The cylinder speed is fast and the load does not react

Countermeasures
(1) Replace the cylinder switch with a model with small internal voltage drop □2 type → □0 type → □3 type → □5 type
(2) Replace the load with one with smaller min. working voltage

(1) Source input ---- Select NPN output □3 type (NPN output is standard)
(2) Sink input -------- Select PNP output □3P type (T, K, M or F switch only)
(3) Change the cylinder switch to 2-wire

(1) Change to T2J with OFF delay specifications (T switch only)
(2) Connect several cylinder switches in parallel to increase the operating range.
(3) Connect a sensor controller, etc., between the cylinder switch and load, and change to a signal time that matches load performance. Example: OMRON S3D2
(4) Decrease cylinder speed

Technical data

	Page
Theoretical thrust table (1 to 6)	Ending 56
Cylinder bore size selection nomogram (7/8)	Ending 63
Required flow rate of cylinder during operation (9/10)	Ending 65
Allowable absorbed energy value (11/12)	Ending 67
Relation values between mounting dimensions and max. stroke (L) (13/14)	Ending 69
How to determine cylinder mounting (15)	Ending 71
Air compressor and air tank selection (16)	Ending 72
Commonly used dimension tolerance (17)	Ending 73
International System of Units (SI units)	Ending 74

Theoretical thrust table (double acting)

(Unit: N)

Push ←
Pull →

Bore size (mm)	Compatible models	Operating direction	Working pressure MPa											
			0.05	0.1	0.15	0.2	0.3	0.4	0.5	0.6	0.7	0.8	0.9	1.0
ø4	MDC2	Push	-	-	-	2.51	3.77	5.03	6.28	7.54	8.80	-	-	-
		Pull	-	-	-	1.88	2.83	3.77	4.71	5.65	6.60	-	-	-
ø4.5	LCM	Push	-	-	-	3.18	4.77	6.36	7.95	9.54	11.1	-	-	-
		Pull	-	-	-	2.55	3.83	5.11	6.38	7.66	8.93	-	-	-
ø6	SCPD3	Push	-	-	-	5.65	8.48	11.3	14.1	17.0	19.8	22.6	25.4	28.3
		Pull	-	-	-	4.24	6.36	8.48	10.6	12.7	14.8	17.0	19.1	21.2
	MDC2	Push	-	-	-	5.65	8.48	11.3	14.1	17.0	19.8	-	-	-
		Pull	-	-	-	3.14	4.71	6.28	7.85	9.42	11.0	-	-	-
	MSD/MSD-K MSDG-L	Push	-	-	-	5.65	8.48	11.3	14.1	17.0	19.8	22.6	25.4	28.3
		Pull	-	-	-	3.14	4.71	6.28	7.85	9.42	11.0	12.6	14.1	15.7
	MVC	Push	-	-	-	5.65	8.48	11.3	14.1	17.0	19.8	-	-	-
		Pull	-	-	-	3.14	4.71	6.28	7.85	9.42	11.0	-	-	-
	SMG	Push	-	-	-	5.65	8.48	11.3	14.1	17.0	19.8	-	-	-
		Pull	-	-	-	4.24	6.36	8.48	10.6	12.7	14.8	-	-	-
	MRL2/ MRL2-G	Push	-	-	-	-	8.48	11.3	14.1	17.0	19.8	-	-	-
		Pull	-	-	-	-	8.48	11.3	14.1	17.0	19.8	-	-	-
	MRL2-W	Push	-	-	-	-	17.0	22.6	28.3	33.9	39.6	-	-	-
		Pull	-	-	-	-	17.0	22.6	28.3	33.9	39.6	-	-	-
	STM	Push	-	2.83	4.24	5.65	8.48	11.3	14.1	17.0	19.8	-	-	-
		Pull	-	2.12	3.18	4.24	6.36	8.48	10.6	12.7	14.8	-	-	-
	STR2	Push	-	-	-	11.3	17.0	22.6	28.3	33.9	39.6	-	-	-
		Pull	-	-	-	6.28	9.42	12.6	15.7	18.8	22.0	-	-	-
	LCR	Push	-	-	8.0	11.0	17.0	23.0	28.0	34.0	40.0	-	-	-
		Pull	-	-	6.0	8.0	13.0	17.0	21.0	25.0	30.0	-	-	-
	LCG	Push	-	-	8.48	11.3	17.0	22.6	28.3	33.9	39.6	-	-	-
		Pull	-	-	6.36	8.48	12.7	17.0	21.2	25.4	29.7	-	-	-
	LCM	Push	-	-	-	5.65	8.48	11.3	14.1	17.0	19.8	-	-	-
		Pull	-	-	-	4.24	6.36	8.48	10.6	12.7	14.8	-	-	-
ø8	MDC2	Push	-	-	-	10.1	15.1	20.1	25.1	30.2	35.2	-	-	-
		Pull	-	-	-	6.13	9.19	12.3	15.3	18.4	21.4	-	-	-
	MSD/MSD-K MSDG-L	Push	-	-	-	10.1	15.1	20.1	25.1	30.2	35.2	40.2	45.2	50.3
		Pull	-	-	-	6.13	9.19	12.3	15.3	18.4	21.4	24.5	27.6	30.6
	LCR	Push	-	-	15.0	20.0	30.0	40.0	50.0	60.0	70.0	-	-	-
		Pull	-	-	11.0	15.0	23.0	30.0	38.0	45.0	53.0	-	-	-
	LCG	Push	-	-	15.1	20.1	30.2	40.2	50.3	60.3	70.4	-	-	-
		Pull	-	-	11.3	15.1	22.6	30.2	37.7	45.2	52.8	-	-	-
	LCM	Push	-	-	7.54	10.1	15.1	20.1	25.1	30.2	35.2	-	-	-
		Pull	-	-	6.48	8.64	13.0	17.3	21.6	25.9	30.2	-	-	-
	STS/STL	Push	-	-	-	10.1	15.1	20.1	25.1	30.2	35.2	40.2	45.2	50.3
		Pull	-	-	-	7.54	11.3	15.1	18.8	22.6	26.4	30.2	33.9	37.7
ø10	SCPD3	Push	-	7.85	11.8	15.7	23.6	31.4	39.3	47.1	55.0	62.8	70.7	78.5
		Pull	-	6.60	9.90	13.2	19.8	26.4	33.0	39.6	46.2	52.8	59.4	66.0
	MDC2	Push	-	7.85	11.8	15.7	23.6	31.4	39.3	47.1	55.0	-	-	-
		Pull	-	5.03	7.54	10.1	15.1	20.1	25.1	30.2	35.2	-	-	-
	MVC	Push	-	7.85	11.8	15.7	23.6	31.4	39.3	47.1	55.0	-	-	-
		Pull	-	5.03	7.54	10.1	15.1	20.1	25.1	30.2	35.2	-	-	-
	SMG	Push	-	7.85	11.8	15.7	23.6	31.4	39.3	47.1	55.0	-	-	-
		Pull	-	6.60	9.90	13.2	19.8	26.4	33.0	39.6	46.2	-	-	-
	STM	Push	-	7.85	11.8	15.7	23.6	31.4	39.3	47.1	55.0	-	-	-
		Pull	-	6.60	9.90	13.2	19.8	26.4	33.0	39.6	46.2	-	-	-
	MRL2/ MRL2-G	Push	-	-	-	-	23.6	31.4	39.3	47.1	55.0	-	-	-
		Pull	-	-	-	-	23.6	31.4	39.3	47.1	55.0	-	-	-
	MRL2-W	Push	-	-	-	-	47.1	62.8	78.5	94.2	1.10×10^2	-	-	-
		Pull	-	-	-	-	47.1	62.8	78.5	94.2	1.10×10^2	-	-	-
	MRG2	Push	-	-	-	-	23.6	31.4	39.3	47.1	55.0	-	-	-
		Pull	-	-	-	-	23.6	31.4	39.3	47.1	55.0	-	-	-
	STR2	Push	-	-	-	31.4	47.1	62.8	78.5	94.2	1.10×10^2	-	-	-
		Pull	-	-	-	20.1	30.2	40.2	50.3	60.3	70.4	-	-	-
	UCA2	Push	-	-	-	20.1	30.2	40.2	50.3	60.3	70.4	80.4	90.5	1.01×10^2
		Pull	-	-	-	20.1	30.2	40.2	50.3	60.3	70.4	80.4	90.5	1.01×10^2
ø12	MSD-K/ MSDG-L	Push	-	11.3	17.0	22.6	33.9	45.2	56.5	67.9	79.2	90.5	1.02×10^2	1.13×10^2
		Pull	-	8.48	12.7	17.0	25.4	33.9	42.4	50.9	59.4	67.9	76.3	84.8
	SSD2/SSD	Push	-	11.3	17.0	22.6	33.9	45.2	56.5	67.9	79.2	90.5	1.02×10^2	1.13×10^2
		Pull	-	8.48	12.7	17.0	25.4	33.9	42.4	50.9	59.4	67.9	76.3	84.8
	SSG	Push	-	-	17.0	22.6	33.9	45.2	56.5	67.9	79.2	90.5	1.02×10^2	1.13×10^2
		Pull	-	-	12.7	17.0	25.4	33.9	42.4	50.9	59.4	67.9	76.3	84.8
	SRL3	Push	-	-	-	27.7	41.5	55.3	69.1	83.0	96.8	-	-	-
		Pull	-	-	-	27.7	41.5	55.3	69.1	83.0	96.8	-	-	-
	SRT	Push	-	-	-	27.7	41.5	55.3	69.1	83.0	96.8	-	-	-
		Pull	-	-	-	27.7	41.5	55.3	69.1	83.0	96.8	-	-	-
	LCW	Push	-	-	17.0	23.0	34.0	45.0	57.0	68.0	79.0	-	-	-
		Pull	-	-	13.0	17.0	25.0	34.0	42.0	51.0	59.0	-	-	-
	LCR	Push	-	-	34.0	45.0	68.0	90.0	1.13×10^2	1.36×10^2	1.58×10^2	-	-	-
		Pull	-	-	25.0	34.0	51.0	68.0	85.0	1.02×10^2	1.19×10^2	-	-	-
	LCG	Push	-	-	33.9	45.2	67.9	90.5	1.13×10^2	1.36×10^2	1.58×10^2	-	-	-
		Pull	-	-	25.4	33.9	50.9	67.9	84.8	1.02×10^2	1.19×10^2	-	-	-
	STS/STL	Push	-	-	-	22.6	33.9	45.2	56.5	67.9	79.2	90.5	1.02×10^2	1.13×10^2
		Pull	-	-	-	17.0	25.4	33.9	42.4	50.9	59.4	67.9	76.3	84.8
	STG	Push	-	-	17.0	22.6	33.9	45.2	56.5	67.9	79.2	90.5	1.02×10^2	1.13×10^2
		Pull	-	-	12.7	17.0	25.4	33.9	42.4	50.9	59.4	67.9	76.3	84.8
	SRG	Push	-	-	-	27.7	41.5	55.3	69.1	83.0	96.8	-	-	-
		Pull	-	-	-	27.7	41.5	55.3	69.1	83.0	96.8	-	-	-

Theoretical thrust table (double acting)

(Unit: N)

Push ←
Pull →

Bore size (mm)	Compatible models	Operating direction	Working pressure MPa 0.05	0.1	0.15	0.2	0.3	0.4	0.5	0.6	0.7	0.8	0.9	1.0
ø12	RCS2	Push	-	11.3	-	22.6	33.9	45.2	56.5	67.9	79.2	90.5	1.02×10^2	1.13×10^2
		Pull	-	8.5	-	17.0	25.4	33.9	42.4	50.9	59.4	67.9	76.3	84.8
ø16	SCPD3/ULKP	Push	-	20.1	30.2	40.2	60.3	80.4	1.01×10^2	1.21×10^2	1.41×10^2	1.61×10^2	1.81×10^2	2.01×10^2
		Pull	-	18.1	27.2	36.3	54.4	72.6	90.7	1.09×10^2	1.27×10^2	1.45×10^2	1.63×10^2	1.81×10^2
	MSD-K/ MSDG-L	Push	-	20.1	30.2	40.2	60.3	80.4	1.01×10^2	1.21×10^2	1.41×10^2	1.61×10^2	1.81×10^2	2.01×10^2
		Pull	-	15.1	22.6	30.2	45.2	60.3	75.4	90.5	1.06×10^2	1.21×10^2	1.36×10^2	1.51×10^2
	SMG	Push	-	20.1	30.2	40.2	60.3	80.4	1.01×10^2	1.21×10^2	1.41×10^2	-	-	-
		Pull	-	17.3	25.9	34.6	51.8	69.1	86.4	1.04×10^2	1.21×10^2	-	-	-
	STG	Push	-	-	30.2	40.2	60.3	80.4	1.01×10^2	1.21×10^2	1.41×10^2	1.61×10^2	1.81×10^2	2.01×10^2
		Pull	-	-	22.6	30.2	45.2	60.3	75.4	90.5	1.06×10^2	1.21×10^2	1.36×10^2	1.51×10^2
	MRL2/ MRL2-G	Push	-	-	-	40.2	60.3	80.4	1.01×10^2	1.21×10^2	1.41×10^2	-	-	-
		Pull	-	-	-	40.2	60.3	80.4	1.01×10^2	1.21×10^2	1.41×10^2	-	-	-
	MRL2-W	Push	-	-	-	80.4	1.21×10^2	1.61×10^2	2.01×10^2	2.41×10^2	2.81×10^2	-	-	-
		Pull	-	-	-	80.4	1.21×10^2	1.61×10^2	2.01×10^2	2.41×10^2	2.81×10^2	-	-	-
	MRG2	Push	-	-	-	40.2	60.3	80.4	1.01×10^2	1.21×10^2	1.41×10^2	-	-	-
		Pull	-	-	-	40.2	60.3	80.4	1.01×10^2	1.21×10^2	1.41×10^2	-	-	-
	STR2	Push	-	40.2	60.3	80.4	1.21×10^2	1.61×10^2	2.01×10^2	2.41×10^2	2.81×10^2	-	-	-
		Pull	-	24.5	36.8	49.0	73.5	98.0	1.23×10^2	1.47×10^2	1.72×10^2	-	-	-
	UCA2	Push	-	-	-	49.0	73.5	98.0	1.23×10^2	1.47×10^2	1.72×10^2	1.96×10^2	2.21×10^2	2.45×10^2
		Pull	-	-	-	49.0	73.5	98.0	1.23×10^2	1.47×10^2	1.72×10^2	1.96×10^2	2.21×10^2	2.45×10^2
	SSD2/SSD	Push	-	20.1	30.2	40.2	60.3	80.4	1.01×10^2	1.21×10^2	1.41×10^2	1.61×10^2	1.81×10^2	2.01×10^2
		Pull	-	15.1	22.6	30.2	45.2	60.3	75.4	90.5	1.06×10^2	1.21×10^2	1.36×10^2	1.51×10^2
	SSG	Push	-	-	30.2	40.2	60.3	80.4	1.01×10^2	1.21×10^2	1.41×10^2	1.61×10^2	1.81×10^2	2.01×10^2
		Pull	-	-	22.6	30.2	45.2	60.3	75.4	90.5	1.06×10^2	1.21×10^2	1.36×10^2	1.51×10^2
	SRL3	Push	-	-	-	43.2	64.8	86.4	1.08×10^2	1.30×10^2	1.51×10^2	-	-	-
		Pull	-	-	-	43.2	64.8	86.4	1.08×10^2	1.30×10^2	1.51×10^2	-	-	-
	SRT3	Push	-	-	-	43.2	64.8	86.4	1.08×10^2	1.30×10^2	1.51×10^2	-	-	-
		Pull	-	-	-	43.2	64.8	86.4	1.08×10^2	1.30×10^2	1.51×10^2	-	-	-
	LCW	Push	-	-	30.0	40.0	60.0	80.0	1.01×10^2	1.21×10^2	1.41×10^2	-	-	-
		Pull	-	-	26.0	35.0	52.0	69.0	86.0	1.04×10^2	1.21×10^2	-	-	-
	LCR	Push	-	-	60.0	80.0	1.21×10^2	1.61×10^2	2.01×10^2	2.41×10^2	2.81×10^2	-	-	-
		Pull	-	-	52.0	69.0	1.04×10^2	1.38×10^2	1.73×10^2	2.07×10^2	2.42×10^2	-	-	-
	LCG	Push	-	-	60.3	80.4	1.21×10^2	1.61×10^2	2.01×10^2	2.41×10^2	2.81×10^2	-	-	-
		Pull	-	-	51.8	69.1	1.04×10^2	1.38×10^2	1.73×10^2	2.07×10^2	2.42×10^2	-	-	-
	STS/STL	Push	-	-	-	40.2	60.3	80.4	1.01×10^2	1.21×10^2	1.41×10^2	1.61×10^2	1.81×10^2	2.01×10^2
		Pull	-	-	-	30.2	45.2	60.3	75.4	90.5	1.06×10^2	1.21×10^2	1.36×10^2	1.51×10^2
	SRG3	Push	-	-	-	43.2	64.8	86.4	1.08×10^2	1.30×10^2	1.51×10^2	-	-	-
		Pull	-	-	-	43.2	64.8	86.4	1.08×10^2	1.30×10^2	1.51×10^2	-	-	-
	RCS2	Push	-	20.1	-	40.2	60.3	80.4	1.01×10^2	1.21×10^2	1.41×10^2	1.61×10^2	1.81×10^2	2.01×10^2
		Pull	-	15.1	-	30.2	45.2	60.3	75.4	90.5	1.06×10^2	1.21×10^2	1.36×10^2	1.51×10^2
	RCC2	Push	-	-	-	40.2	60.3	80.4	1.01×10^2	1.21×10^2	1.41×10^2	1.61×10^2	1.81×10^2	2.01×10^2
		Pull	-	-	-	24.5	36.8	49.0	61.3	73.5	85.8	98.0	1.10×10^2	1.23×10^2
ø20	CMK2/ULK/JSK2 HCA/HCM/SSD2/SSD	Push	-	31.4	47.1	62.8	94.2	1.26×10^2	1.57×10^2	1.88×10^2	2.20×10^2	2.51×10^2	2.83×10^2	3.14×10^2
		Pull	-	23.6	35.3	47.1	70.7	94.2	1.18×10^2	1.41×10^2	1.65×10^2	1.88×10^2	2.12×10^2	2.36×10^2
	CMA2/JSM2	Push	-	31.4	47.1	62.8	94.2	1.26×10^2	1.57×10^2	1.88×10^2	2.20×10^2	-	-	-
		Pull	-	23.6	35.3	47.1	70.7	94.2	1.18×10^2	1.41×10^2	1.65×10^2	-	-	-
	SSG	Push	-	-	47.1	62.8	94.2	1.26×10^2	1.57×10^2	1.88×10^2	2.20×10^2	2.51×10^2	2.83×10^2	3.14×10^2
		Pull	-	-	35.3	47.1	70.7	94.2	1.18×10^2	1.41×10^2	1.65×10^2	1.88×10^2	2.12×10^2	2.36×10^2
	SMG	Push	-	31.4	47.1	62.8	94.2	1.26×10^2	1.57×10^2	1.88×10^2	2.20×10^2	-	-	-
		Pull	-	26.4	39.6	52.8	79.2	1.06×10^2	1.32×10^2	1.58×10^2	1.85×10^2	-	-	-
	MRL2/ MRL2-G	Push	-	-	-	62.8	94.2	1.26×10^2	1.57×10^2	1.88×10^2	2.20×10^2	-	-	-
		Pull	-	-	-	62.8	94.2	1.26×10^2	1.57×10^2	1.88×10^2	2.20×10^2	-	-	-
	MRL2-W	Push	-	-	-	1.26×10^2	1.88×10^2	2.51×10^2	3.14×10^2	3.77×10^2	4.40×10^2	-	-	-
		Pull	-	-	-	1.26×10^2	1.88×10^2	2.51×10^2	3.14×10^2	3.77×10^2	4.40×10^2	-	-	-
	STR2	Push	-	62.8	94.2	1.26×10^2	1.88×10^2	2.51×10^2	3.14×10^2	3.77×10^2	4.40×10^2	-	-	-
		Pull	-	40.2	60.3	80.4	1.21×10^2	1.61×10^2	2.01×10^2	2.41×10^2	2.81×10^2	-	-	-
	LCW	Push	-	-	47.0	63.0	94.0	1.26×10^2	1.57×10^2	1.88×10^2	2.20×10^2	-	-	-
		Pull	-	-	40.0	53.0	79.0	1.06×10^2	1.32×10^2	1.58×10^2	1.85×10^2	-	-	-
	LCR	Push	-	-	94.0	1.26×10^2	1.88×10^2	2.51×10^2	3.14×10^2	3.77×10^2	4.40×10^2	-	-	-
		Pull	-	-	79.0	1.06×10^2	1.58×10^2	2.11×10^2	2.64×10^2	3.17×10^2	3.69×10^2	-	-	-
	LCG	Push	-	-	94.2	1.26×10^2	1.88×10^2	2.51×10^2	3.14×10^2	3.77×10^2	4.40×10^2	-	-	-
		Pull	-	-	79.2	1.06×10^2	1.58×10^2	2.11×10^2	2.64×10^2	3.17×10^2	3.69×10^2	-	-	-
	STG	Push	-	-	47.1	62.8	94.2	1.26×10^2	1.57×10^2	1.88×10^2	2.20×10^2	2.51×10^2	2.83×10^2	3.14×10^2
		Pull	-	-	35.3	47.1	70.7	94.2	1.18×10^2	1.41×10^2	1.65×10^2	1.88×10^2	2.12×10^2	2.36×10^2
	STS/STL	Push	-	-	-	62.8	94.2	1.26×10^2	1.57×10^2	1.88×10^2	2.20×10^2	2.51×10^2	2.83×10^2	3.14×10^2
		Pull	-	-	-	47.1	70.7	94.2	1.18×10^2	1.41×10^2	1.65×10^2	1.88×10^2	2.12×10^2	2.36×10^2
	STK/STK-M	Push	-	-	-	62.8	94.2	1.26×10^2	1.57×10^2	1.88×10^2	2.20×10^2	2.51×10^2	2.83×10^2	3.14×10^2
		Pull	-	-	-	40.2	60.3	80.4	1.01×10^2	1.21×10^2	1.41×10^2	1.61×10^2	1.81×10^2	2.01×10^2
	STK-Y1/STK-MY1	Push	-	-	-	-	94.2	1.26×10^2	1.57×10^2	1.88×10^2	2.20×10^2	2.51×10^2	2.83×10^2	3.14×10^2
		Pull	-	-	-	-	45.6	65.7	85.8	1.06×10^2	1.26×10^2	1.46×10^2	1.66×10^2	1.86×10^2
	SRG3	Push	-	-	-	62.9	94.4	1.26×10^2	1.57×10^2	1.89×10^2	2.20×10^2	-	-	-
		Pull	-	-	-	62.9	94.4	1.26×10^2	1.57×10^2	1.89×10^2	2.20×10^2	-	-	-
	SCM	Push	-	31.4	47.1	62.8	94.2	1.26×10^2	1.57×10^2	1.88×10^2	2.20×10^2	2.51×10^2	2.83×10^2	3.14×10^2
		Pull	-	26.4	39.6	52.8	79.2	1.06×10^2	1.32×10^2	1.58×10^2	1.85×10^2	2.11×10^2	2.38×10^2	2.64×10^2
	SRL3	Push	-	-	-	62.9	94.4	1.26×10^2	1.57×10^2	1.89×10^2	2.20×10^2	-	-	-
		Pull	-	-	-	62.9	94.4	1.26×10^2	1.57×10^2	1.89×10^2	2.20×10^2	-	-	-
	SRT3	Push	-	-	-	62.9	94.4	1.26×10^2	1.57×10^2	1.89×10^2	2.20×10^2	-	-	-
		Pull	-	-	-	62.9	94.4	1.26×10^2	1.57×10^2	1.89×10^2	2.20×10^2	-	-	-
	RCS2	Push	-	31.4	-	62.8	94.2	1.26×10^2	1.57×10^2	1.88×10^2	2.20×10^2	2.51×10^2	2.83×10^2	3.14×10^2
		Pull	-	20.1	-	40.2	60.3	80.4	1.01×10^2	1.21×10^2	1.41×10^2	1.61×10^2	1.81×10^2	2.01×10^2
	RCC2	Push	-	-	-	62.8	94.2	1.26×10^2	1.57×10^2	1.89×10^2	2.20×10^2	2.51×10^2	2.83×10^2	3.14×10^2
		Pull	-	-	-	40.2	60.3	80.4	1.01×10^2	1.21×10^2	1.41×10^2	1.61×10^2	1.81×10^2	2.01×10^2

Theoretical thrust table (double acting)

(Unit: N)

Push ←
Pull →

Bore size (mm)	Compatible models	Operating direction	Working pressure MPa 0.05	0.1	0.15	0.2	0.3	0.4	0.5	0.6	0.7	0.8	0.9	1.0
ø25	CMK2/ULK/JSK2 HCA/HCM/SSD2/SSD	Push	-	49.1	73.6	98.2	1.47×10^2	1.96×10^2	2.45×10^2	2.95×10^2	3.44×10^2	3.93×10^2	4.42×10^2	4.91×10^2
		Pull	-	37.8	56.7	75.6	1.13×10^2	1.51×10^2	1.89×10^2	2.27×10^2	2.64×10^2	3.02×10^2	3.40×10^2	3.78×10^2
	SSG	Push	-	-	73.6	98.2	1.47×10^2	1.96×10^2	2.45×10^2	2.95×10^2	3.44×10^2	3.93×10^2	4.42×10^2	4.91×10^2
		Pull	-	-	56.7	75.6	1.13×10^2	1.51×10^2	1.89×10^2	2.27×10^2	2.64×10^2	3.02×10^2	3.40×10^2	3.78×10^2
	SMG	Push	-	49.1	73.6	98.2	1.47×10^2	1.96×10^2	2.45×10^2	2.95×10^2	3.44×10^2	-	-	-
		Pull	-	41.2	61.9	82.5	1.24×10^2	1.65×10^2	2.06×10^2	2.47×10^2	2.89×10^2	-	-	-
	MRL2/ MRL2-G	Push	-	-	-	98.2	1.47×10^2	1.96×10^2	2.45×10^2	2.95×10^2	3.44×10^2	-	-	-
		Pull	-	-	-	98.2	1.47×10^2	1.96×10^2	2.45×10^2	2.95×10^2	3.44×10^2	-	-	-
	MRL2-W	Push	-	-	-	1.96×10^2	2.95×10^2	3.93×10^2	4.91×10^2	5.89×10^2	6.87×10^2	-	-	-
		Pull	-	-	-	1.96×10^2	2.95×10^2	3.93×10^2	4.91×10^2	5.89×10^2	6.87×10^2	-	-	-
	MRG2	Push	-	-	-	98.2	1.47×10^2	1.96×10^2	2.45×10^2	2.95×10^2	3.44×10^2	-	-	-
		Pull	-	-	-	98.2	1.47×10^2	1.96×10^2	2.45×10^2	2.95×10^2	3.44×10^2	-	-	-
	LCR	Push	-	-	1.47×10^2	1.96×10^2	2.95×10^2	3.93×10^2	4.91×10^2	5.89×10^2	6.87×10^2	-	-	-
		Pull	-	-	1.24×10^2	1.65×10^2	2.47×10^2	3.30×10^2	4.12×10^2	4.95×10^2	5.77×10^2	-	-	-
	LCG	Push	-	-	1.47×10^2	1.96×10^2	2.95×10^2	3.93×10^2	4.91×10^2	5.89×10^2	6.87×10^2	-	-	-
		Pull	-	-	1.24×10^2	1.65×10^2	2.47×10^2	3.30×10^2	4.12×10^2	4.95×10^2	5.77×10^2	-	-	-
	LCX	Push	-	-	74	99	1.48×10^2	1.97×10^2	2.46×10^2	2.96×10^2	3.45×10^2	-	-	-
		Pull	-	-	57	76	1.14×10^2	1.52×10^2	1.90×10^2	2.28×10^2	2.66×10^2	-	-	-
	STG	Push	-	-	73.6	98.2	1.47×10^2	1.96×10^2	2.45×10^2	2.95×10^2	3.44×10^2	3.93×10^2	4.42×10^2	4.91×10^2
		Pull	-	-	56.7	75.6	1.13×10^2	1.51×10^2	1.89×10^2	2.27×10^2	2.64×10^2	3.02×10^2	3.40×10^2	3.78×10^2
	STS/STL	Push	-	-	-	98.2	1.47×10^2	1.96×10^2	2.45×10^2	2.95×10^2	3.44×10^2	3.93×10^2	4.42×10^2	4.91×10^2
		Pull	-	-	-	75.6	1.13×10^2	1.51×10^2	1.89×10^2	2.27×10^2	2.64×10^2	3.02×10^2	3.40×10^2	3.78×10^2
	STR2	Push	-	98.2	1.47×10^2	1.96×10^2	2.95×10^2	3.93×10^2	4.91×10^2	5.89×10^2	6.87×10^2	-	-	-
		Pull	-	67.4	1.01×10^2	1.35×10^2	2.02×10^2	2.70×10^2	3.37×10^2	4.04×10^2	4.72×10^2	-	-	-
	UCA2	Push	-	67.4	1.01×10^2	1.35×10^2	2.02×10^2	2.70×10^2	3.37×10^2	4.04×10^2	4.72×10^2	5.39×10^2	6.06×10^2	6.74×10^2
		Pull	-	67.4	1.01×10^2	1.35×10^2	2.02×10^2	2.70×10^2	3.37×10^2	4.04×10^2	4.72×10^2	5.39×10^2	6.06×10^2	6.74×10^2
	SRG3	Push	-	54.2	81.4	1.08×10^2	1.63×10^2	2.17×10^2	2.71×10^2	3.25×10^2	3.80×10^2	-	-	-
		Pull	-	54.2	81.4	1.08×10^2	1.63×10^2	2.17×10^2	2.71×10^2	3.25×10^2	3.80×10^2	-	-	-
	SRM3	Push	-	-	-	1.08×10^2	1.63×10^2	2.17×10^2	2.71×10^2	3.25×10^2	3.80×10^2	-	-	-
		Pull	-	-	-	1.08×10^2	1.63×10^2	2.17×10^2	2.71×10^2	3.25×10^2	3.80×10^2	-	-	-
	SCM	Push	-	49.1	73.6	98.2	1.47×10^2	1.96×10^2	2.45×10^2	2.95×10^2	3.44×10^2	3.93×10^2	4.42×10^2	4.91×10^2
		Pull	-	41.2	61.9	82.5	1.24×10^2	1.65×10^2	2.06×10^2	2.47×10^2	2.89×10^2	3.30×10^2	3.71×10^2	4.12×10^2
	SRL3	Push	-	54.2	81.4	1.08×10^2	1.63×10^2	2.17×10^2	2.71×10^2	3.25×10^2	3.80×10^2	-	-	-
		Pull	-	54.2	81.4	1.08×10^2	1.63×10^2	2.17×10^2	2.71×10^2	3.25×10^2	3.80×10^2	-	-	-
	SRT3	Push	-	-	-	1.08×10^2	1.63×10^2	2.17×10^2	2.71×10^2	3.25×10^2	3.80×10^2	-	-	-
		Pull	-	-	-	1.08×10^2	1.63×10^2	2.17×10^2	2.71×10^2	3.25×10^2	3.80×10^2	-	-	-
	FCD	Push	-	49.3	73.9	98.5	1.48×10^2	1.97×10^2	2.46×10^2	2.96×10^2	3.45×102	-	-	-
		Pull	-	37.9	56.9	75.9	1.14×10^2	1.52×10^2	1.90×10^2	2.28×10^2	2.66×10^2	-	-	-
	UFCD	Push	-	-	-	98.5	1.48×10^2	1.97×10^2	2.46×10^2	2.96×10^2	3.45×102	-	-	-
		Pull	-	-	-	75.9	1.14×10^2	1.52×10^2	1.90×10^2	2.28×10^2	2.66×10^2	-	-	-
	RCS2	Push	-	49.1	-	98.2	1.47×10^2	1.96×10^2	2.45×10^2	2.95×10^2	3.44×10^2	3.93×10^2	4.42×10^2	4.91×10^2
		Pull	-	37.8	-	75.6	1.13×10^2	1.51×10^2	1.89×10^2	2.27×10^2	2.64×10^2	3.02×10^2	3.40×10^2	3.78×10^2
	RCC2	Push	-	-	-	98.2	1.47×10^2	1.96×10^2	2.45×10^2	2.95×10^2	3.44×10^2	3.93×10^2	4.42×10^2	4.91×10^2
		Pull	-	-	-	75.6	1.13×10^2	1.51×10^2	1.89×10^2	2.27×10^2	2.64×10^2	3.02×10^2	3.40×10^2	3.78×10^2
ø30	CMA2/JSM2	Push	-	70.7	1.06×10^2	1.41×10^2	2.12×10^2	2.83×10^2	3.53×10^2	4.24×10^2	4.95×10^2	-	-	-
		Pull	-	59.4	89.1	1.19×10^2	1.78×10^2	2.38×10^2	2.97×10^2	3.56×10^2	4.16×10^2	-	-	-
	MFC-BS	Push	-	-	-	1.41×10^2	2.12×10^2	2.83×10^2	3.53×10^2	4.24×10^2	4.95×10^2	5.65×10^2	6.36×10^2	7.07×10^2
		Pull	-	-	-	1.19×10^2	1.78×10^2	2.38×10^2	2.97×10^2	3.56×10^2	4.16×10^2	4.75×10^2	5.34×10^2	5.94×10^2
ø32	SCG	Push	40.2	80.4	1.21×10^2	1.61×10^2	2.41×10^2	3.22×10^2	4.02×10^2	4.83×10^2	5.63×10^2	6.43×10^2	7.24×10^2	8.04×10^2
		Pull	34.6	69.1	1.04×10^2	1.38×10^2	2.07×10^2	2.76×10^2	3.46×10^2	4.15×10^2	4.84×10^2	5.53×10^2	6.22×10^2	6.91×10^2
	SSD2/SSD	Push	-	80.4	1.21×10^2	1.61×10^2	2.41×10^2	3.22×10^2	4.02×10^2	4.83×10^2	5.63×10^2	6.43×10^2	7.24×10^2	8.04×10^2
		Pull	-	60.3	90.5	1.21×10^2	1.81×10^2	2.41×10^2	3.02×10^2	3.62×10^2	4.22×10^2	4.83×10^2	5.43×10^2	6.03×10^2
	SSG	Push	-	80.4	1.21×10^2	1.61×10^2	2.41×10^2	3.22×10^2	4.02×10^2	4.83×10^2	5.63×10^2	6.43×10^2	7.24×10^2	8.04×10^2
		Pull	-	60.3	90.5	1.21×10^2	1.81×10^2	2.41×10^2	3.02×10^2	3.62×10^2	4.22×10^2	4.83×10^2	5.43×10^2	6.03×10^2
	CMK2/ULK/JSK2 CAC-N/HCA/HCM/SCM	Push	-	80.4	1.21×10^2	1.61×10^2	2.41×10^2	3.22×10^2	4.02×10^2	4.83×10^2	5.63×10^2	6.43×10^2	7.24×10^2	8.04×10^2
		Pull	-	69.1	1.04×10^2	1.38×10^2	2.07×10^2	2.76×10^2	3.46×10^2	4.15×10^2	4.84×10^2	5.53×10^2	6.22×10^2	6.91×10^2
	CAC-N	Push	-	-	1.21×10^2	1.61×10^2	2.41×10^2	3.22×10^2	4.02×10^2	4.83×10^2	5.63×10^2	6.43×10^2	7.24×10^2	8.04×10^2
		Pull	-	-	1.04×10^2	1.38×10^2	2.07×10^2	2.76×10^2	3.46×10^2	4.15×10^2	4.84×10^2	5.53×10^2	6.22×10^2	6.91×10^2
	SMG	Push	-	80.4	1.21×10^2	1.61×10^2	2.41×10^2	3.22×10^2	4.02×10^2	4.83×10^2	5.63×10^2	-	-	-
		Pull	-	69.1	1.04×10^2	1.38×10^2	2.07×10^2	2.76×10^2	3.46×10^2	4.15×10^2	4.84×10^2	-	-	-
	MRL2/ MRL2-G	Push	-	-	-	1.61×10^2	2.41×10^2	3.22×10^2	4.02×10^2	4.83×10^2	5.63×10^2	-	-	-
		Pull	-	-	-	1.61×10^2	2.41×10^2	3.22×10^2	4.02×10^2	4.83×10^2	5.63×10^2	-	-	-
	MRL2-W	Push	-	-	-	3.22×10^2	4.83×10^2	6.43×10^2	8.04×10^2	9.65×10^2	1.13×10^2	-	-	-
		Pull	-	-	-	3.22×10^2	4.83×10^2	6.43×10^2	8.04×10^2	9.65×10^2	1.13×10^2	-	-	-
	UCA2	Push	-	1.21×10^2	1.81×10^2	2.41×10^2	3.62×10^2	4.83×10^2	6.03×10^2	7.24×10^2	8.44×10^2	9.65×10^2	1.09×10^3	1.21×10^3
		Pull	-	1.21×10^2	1.81×10^2	2.41×10^2	3.62×10^2	4.83×10^2	6.03×10^2	7.24×10^2	8.44×10^2	9.65×10^2	1.09×10^3	1.21×10^3
	SRL3	Push	-	81.4	1.22×10^2	1.63×10^2	2.44×10^2	3.26×10^2	4.07×10^2	4.88×10^2	5.70×10^2	-	-	-
		Pull	-	81.4	1.22×10^2	1.63×10^2	2.44×10^2	3.26×10^2	4.07×10^2	4.88×10^2	5.70×10^2	-	-	-
	FCD	Push	-	77.6	1.16×10^2	1.55×10^2	2.33×10^2	3.10×10^2	3.88×10^2	4.66×10^2	5.43×10^2	-	-	-
		Pull	-	57.5	86.3	1.15×10^2	1.73×10^2	2.30×10^2	2.88×10^2	3.45×10^2	4.03×10^2	-	-	-
	LCX	Push	-	-	1.16×10^2	1.55×10^2	2.33×10^2	3.10×10^2	3.88×10^2	4.66×10^2	5.43×10^2	-	-	-
		Pull	-	-	99	1.23×10^2	1.99×10^2	2.65×10^2	3.32×10^2	3.98×10^2	4.64×10^2	-	-	-
	STG	Push	-	80.4	1.21×10^2	1.61×10^2	2.41×10^2	3.22×10^2	4.02×10^2	4.83×10^2	5.63×10^2	6.43×10^2	7.24×10^2	8.04×10^2
		Pull	-	60.3	90.5	1.21×10^2	1.81×10^2	2.41×10^2	3.02×10^2	3.62×10^2	4.22×10^2	4.83×10^2	5.43×10^2	6.03×10^2
	STS/STL	Push	-	80.4	1.21×10^2	1.61×10^2	2.41×10^2	3.22×10^2	4.02×10^2	4.83×10^2	5.63×10^2	6.43×10^2	7.24×10^2	8.04×10^2
		Pull	-	60.3	90.5	1.21×10^2	1.81×10^2	2.41×10^2	3.02×10^2	3.62×10^2	4.22×10^2	4.83×10^2	5.43×10^2	6.03×10^2
	STK/STK-M	Push	-	80.4	1.21×10^2	1.61×10^2	2.41×10^2	3.22×10^2	4.02×10^2	4.83×10^2	5.63×10^2	6.43×10^2	7.24×10^2	8.04×10^2
		Pull	-	49.0	73.5	98.0	1.47×10^2	1.96×10^2	2.45×10^2	2.94×10^2	3.43×10^2	3.92×10^2	4.41×10^2	4.90×10^2
	STK-Y1/ STK-MY1	Push	-	80.4	1.21×10^2	1.61×10^2	2.41×10^2	3.22×10^2	4.02×10^2	4.83×10^2	5.63×10^2	6.43×10^2	7.24×10^2	8.04×10^2
		Pull	-	17.6	42.1	66.6	1.16×10^2	1.65×10^2	2.14×10^2	2.63×10^2	3.12×10^2	3.61×10^2	4.10×10^2	4.59×10^2
	UFCD	Push	-	-	-	1.55×10^2	2.33×10^2	3.10×10^2	3.88×10^2	4.66×10^2	5.43×10^2	-	-	-
		Pull	-	-	-	1.15×10^2	1.73×10^2	2.30×10^2	2.88×10^2	3.45×10^2	4.03×10^2	-	-	-

Theoretical thrust table (double acting)

(Unit: N)

Push ←
Pull →

Bore size (mm)	Compatible models	Operating direction	Working pressure MPa 0.05	0.1	0.15	0.2	0.3	0.4	0.5	0.6	0.7	0.8	0.9	1.0
ø32	SRM3	Push	-	-	-	1.63×10^2	2.44×10^2	3.26×10^2	4.07×10^2	4.88×10^2	5.70×10^2	-	-	-
		Pull	-	-	-	1.63×10^2	2.44×10^2	3.26×10^2	4.07×10^2	4.88×10^2	5.70×10^2	-	-	-
	SRT3	Push	-	-	-	1.63×10^2	2.44×10^2	3.26×10^2	4.07×10^2	4.88×10^2	5.70×10^2	-	-	-
		Pull	-	-	-	1.63×10^2	2.44×10^2	3.26×10^2	4.07×10^2	4.88×10^2	5.70×10^2	-	-	-
	STR2	Push	-	1.61×10^2	2.41×10^2	3.22×10^2	4.83×10^2	6.43×10^2	8.04×10^2	9.65×10^2	1.13×10^3	-	-	-
		Pull	-	1.21×10^2	1.81×10^2	2.41×10^2	3.62×10^2	4.83×10^2	6.03×10^2	7.24×10^2	8.44×10^2	-	-	-
	RCS2	Push	-	80.4	-	1.61×10^2	2.41×10^2	3.22×10^2	4.02×10^2	4.83×10^2	5.63×10^2	6.43×10^2	7.24×10^2	8.04×10^2
		Pull	-	60.3	-	1.21×10^2	1.81×10^2	2.41×10^2	3.02×10^2	3.62×10^2	4.22×10^2	4.83×10^2	5.43×10^2	6.03×10^2
	RCC2	Push	-	-	-	1.61×10^2	2.41×10^2	3.22×10^2	4.02×10^2	4.83×10^2	5.63×10^2	6.43×10^2	7.24×10^2	8.04×10^2
		Pull	-	-	-	1.21×10^2	1.81×10^2	2.41×10^2	3.02×10^2	3.62×10^2	4.22×10^2	4.83×10^2	5.43×10^2	6.03×10^2
ø40	SCG/JSG	Push	62.8	1.26×10^2	1.88×10^2	2.51×10^2	3.77×10^2	5.03×10^2	6.28×10^2	7.54×10^2	8.80×10^2	1.01×10^3	1.13×10^3	1.26×10^3
		Pull	52.8	1.06×10^2	1.58×10^2	2.11×10^2	3.17×10^2	4.22×10^2	5.28×10^2	6.33×10^2	7.39×10^2	8.44×10^2	9.50×10^2	1.06×10^3
	SCA2/JSC3/HCA/HCM SCM/SSD2/SSD/USC	Push	-	1.26×10^2	1.88×10^2	2.51×10^2	3.77×10^2	5.03×10^2	6.28×10^2	7.54×10^2	8.80×10^2	1.01×10^3	1.13×10^3	1.26×10^3
		Pull	-	1.06×10^2	1.58×10^2	2.11×10^2	3.17×10^2	4.22×10^2	5.28×10^2	6.33×10^2	7.39×10^2	8.44×10^2	9.50×10^2	1.06×10^3
	SSG	Push	-	1.26×10^2	1.88×10^2	2.51×10^2	3.77×10^2	5.03×10^2	6.28×10^2	7.54×10^2	8.80×10^2	1.01×10^3	1.13×10^3	1.26×10^3
		Pull	-	1.06×10^2	1.58×10^2	2.11×10^2	3.17×10^2	4.22×10^2	5.28×10^2	6.33×10^2	7.39×10^2	8.44×10^2	9.50×10^2	1.06×10^3
	CMK2/ULK/CAC-N/ CKV2/JSK2	Push	-	1.26×10^2	1.88×10^2	2.51×10^2	3.77×10^2	5.03×10^2	6.28×10^2	7.54×10^2	8.80×10^2	1.01×10^3	1.13×10^3	1.26×10^3
		Pull	-	1.10×10^2	1.65×10^2	2.21×10^2	3.31×10^2	4.41×10^2	5.51×10^2	6.62×10^2	7.72×10^2	8.82×10^2	9.92×10^2	1.10×10^3
	CAC-N	Push	-	-	1.88×10^2	2.51×10^2	3.77×10^2	5.03×10^2	6.28×10^2	7.54×10^2	8.80×10^2	1.01×10^3	1.13×10^3	1.26×10^3
		Pull	-	-	1.65×10^2	2.21×10^2	3.31×10^2	4.41×10^2	5.51×10^2	6.62×10^2	7.72×10^2	8.82×10^2	9.92×10^2	1.10×10^3
	CMA2/JSM2	Push	-	1.26×10^2	1.88×10^2	2.51×10^2	3.77×10^2	5.03×10^2	6.28×10^2	7.54×10^2	8.80×10^2	-	-	-
		Pull	-	1.10×10^2	1.65×10^2	2.21×10^2	3.31×10^2	4.41×10^2	5.51×10^2	6.62×10^2	7.72×10^2	-	-	-
	SRL3	Push	-	1.27×10^2	1.90×10^2	2.53×10^2	3.80×10^2	5.06×10^2	6.33×10^2	7.60×10^2	8.86×10^2	-	-	-
		Pull	-	1.27×10^2	1.90×10^2	2.53×10^2	3.80×10^2	5.06×10^2	6.33×10^2	7.60×10^2	8.86×10^2	-	-	-
	FCD	Push	-	1.29×10^2	1.94×10^2	2.58×10^2	3.87×10^2	5.16×10^2	6.45×10^2	7.75×10^2	9.04×10^2	-	-	-
		Pull	-	1.09×10^2	1.63×10^2	2.18×10^2	3.27×10^2	4.36×10^2	5.45×10^2	6.54×10^2	7.63×10^2	-	-	-
	STG	Push	-	1.26×10^2	1.88×10^2	2.51×10^2	3.77×10^2	5.03×10^2	6.28×10^2	7.54×10^2	8.80×10^2	1.01×10^3	1.13×10^3	1.26×10^3
		Pull	-	1.06×10^2	1.58×10^2	2.11×10^2	3.17×10^2	4.22×10^2	5.28×10^2	6.33×10^2	7.39×10^2	8.44×10^2	9.50×10^2	1.06×10^3
	STS/STL	Push	-	1.26×10^2	1.88×10^2	2.51×10^2	3.77×10^2	5.03×10^2	6.28×10^2	7.54×10^2	8.80×10^2	1.01×10^3	1.13×10^3	1.26×10^3
		Pull	-	1.06×10^2	1.58×10^2	2.11×10^2	3.17×10^2	4.22×10^2	5.28×10^2	6.33×10^2	7.39×10^2	8.44×10^2	9.50×10^2	1.06×10^3
	STK/STK-M	Push	-	1.26×10^2	1.88×10^2	2.51×10^2	3.77×10^2	5.03×10^2	6.28×10^2	7.54×10^2	8.80×10^2	1.01×10^3	1.13×10^3	1.26×10^3
		Pull	-	76.6	1.15×10^2	1.53×10^2	2.30×10^2	3.06×10^2	3.83×10^2	4.59×10^2	5.36×10^2	6.13×10^2	6.89×10^2	7.66×10^2
	STK-Y1/ STK-MY1	Push	-	1.26×10^2	1.88×10^2	2.51×10^2	3.77×10^2	5.03×10^2	6.28×10^2	7.54×10^2	8.80×10^2	1.01×10^3	1.13×10^3	1.26×10^3
		Pull	-	32.2	70.5	1.09×10^2	1.85×10^2	2.62×10^2	3.38×10^2	4.15×10^2	4.92×10^2	5.68×10^2	6.45×10^2	7.21×10^2
	UFCD	Push	-	-	-	2.58×10^2	3.87×10^2	5.16×10^2	6.45×10^2	7.75×10^2	9.04×10^2	-	-	-
		Pull	-	-	-	2.18×10^2	3.27×10^2	4.36×10^2	5.45×10^2	6.54×10^2	7.63×10^2	-	-	-
	MFC-BS	Push	-	-	-	2.51×10^2	3.77×10^2	5.03×10^2	6.28×10^2	7.54×10^2	8.80×10^2	1.01×10^3	1.13×10^3	1.26×10^3
		Pull	-	-	-	2.21×10^2	3.31×10^2	4.41×10^2	5.51×10^2	6.62×10^2	7.72×10^2	8.82×10^2	9.92×10^2	1.10×10^3
	SRM3	Push	-	-	-	2.53×10^2	3.80×10^2	5.06×10^2	6.33×10^2	7.60×10^2	8.86×10^2	-	-	-
		Pull	-	-	-	2.53×10^2	3.80×10^2	5.06×10^2	6.33×10^2	7.60×10^2	8.86×10^2	-	-	-
	SRT3	Push	-	-	-	2.53×10^2	3.80×10^2	5.06×10^2	6.33×10^2	7.60×10^2	8.86×10^2	-	-	-
		Pull	-	-	-	2.53×10^2	3.80×10^2	5.06×10^2	6.33×10^2	7.60×10^2	8.86×10^2	-	-	-
	CAC4/UCAC2	Push	-	1.26×10^2	1.88×10^2	2.51×10^2	3.77×10^2	5.03×10^2	6.28×10^2	7.54×10^2	8.80×10^2	1.01×10^3	1.13×10^3	1.26×10^3
		Pull	-	94.2	1.41×10^2	1.88×10^2	2.83×10^2	3.77×10^2	4.71×10^2	5.65×10^2	6.60×10^2	7.54×10^2	8.48×10^2	9.42×10^2
	RCS2	Push	-	1.26×10^2	-	2.51×10^2	3.77×10^2	5.03×10^2	6.28×10^2	7.54×10^2	8.80×10^2	1.01×10^3	1.13×10^3	1.26×10^3
		Pull	-	1.06×10^2	-	2.11×10^2	3.17×10^2	4.22×10^2	5.28×10^2	6.33×10^2	7.39×10^2	8.44×10^2	9.50×10^2	1.06×10^3
	RCC2	Push	-	-	-	2.51×10^2	3.77×10^2	5.03×10^2	6.28×10^2	7.54×10^2	8.80×10^2	1.01×10^3	1.13×10^3	1.26×10^3
		Pull	-	-	-	2.11×10^2	3.17×10^2	4.22×10^2	5.28×10^2	6.33×10^2	7.39×10^2	8.45×10^2	9.50×10^2	1.06×10^3
	GLC	Push	-	-	-	2.51×10^2	3.77×10^2	5.03×10^2	6.28×10^2	7.54×10^2	8.80×10^2	1.01×10^3	1.13×10^3	1.26×10^3
		Pull	-	-	-	1.53×10^2	2.30×10^2	3.06×10^2	3.83×10^2	4.59×10^2	5.36×10^2	6.13×10^2	6.89×10^2	7.66×10^2
ø50	SCG/JSG	Push	98.2	1.96×10^2	2.95×10^2	3.93×10^2	5.89×10^2	7.85×10^2	9.82×10^2	1.18×10^3	1.37×10^3	1.57×10^3	1.77×10^3	1.96×10^3
		Pull	82.5	1.65×10^2	2.47×10^2	3.30×10^2	4.95×10^2	6.60×10^2	8.25×10^2	9.90×10^2	1.15×10^3	1.32×10^3	1.48×10^3	1.65×10^3
	SCA2/JSC3/HCA/HCM SCM/SSD2/SSD/USC	Push	-	1.96×10^2	2.95×10^2	3.93×10^2	5.89×10^2	7.85×10^2	9.82×10^2	1.18×10^3	1.37×10^3	1.57×10^3	1.77×10^3	1.96×10^3
		Pull	-	1.65×10^2	2.47×10^2	3.30×10^2	4.95×10^2	6.60×10^2	8.25×10^2	9.90×10^2	1.15×10^3	1.32×10^3	1.48×10^3	1.65×10^3
	SSG	Push	-	1.96×10^2	2.95×10^2	3.93×10^2	5.89×10^2	7.85×10^2	9.82×10^2	1.18×10^3	1.37×10^3	1.57×10^3	1.77×10^3	1.96×10^3
		Pull	-	1.65×10^2	2.47×10^2	3.30×10^2	4.95×10^2	6.60×10^2	8.25×10^2	9.90×10^2	1.15×10^3	1.32×10^3	1.48×10^3	1.65×10^3
	CAV2/COV2	Push	-	-	-	3.93×10^2	5.89×10^2	7.85×10^2	9.82×10^2	1.18×10^3	1.37×10^3	-	-	-
		Pull	-	-	-	3.30×10^2	4.95×10^2	6.60×10^2	8.25×10^2	9.90×10^2	1.15×10^3	-	-	-
	SRL3	Push	-	1.99×10^2	2.98×10^2	3.98×10^2	5.96×10^2	7.95×10^2	9.94×10^2	1.19×10^3	1.39×10^3	-	-	-
		Pull	-	1.99×10^2	2.98×10^2	3.98×10^2	5.96×10^2	7.95×10^2	9.94×10^2	1.19×10^3	1.39×10^3	-	-	-
	FCD	Push	-	1.93×10^2	2.90×10^2	3.86×10^2	5.80×10^2	7.73×10^2	9.66×10^2	1.16×10^3	1.35×10^3	-	-	-
		Pull	-	1.62×10^2	2.43×10^2	3.24×10^2	4.85×10^2	6.47×10^2	8.09×10^2	9.71×10^2	1.13×10^3	-	-	-
	STG	Push	-	1.96×10^2	2.95×10^2	3.93×10^2	5.89×10^2	7.85×10^2	9.82×10^2	1.18×10^3	1.37×10^3	1.57×10^3	1.77×10^3	1.96×10^3
		Pull	-	1.65×10^2	2.47×10^2	3.30×10^2	4.95×10^2	6.60×10^2	8.25×10^2	9.90×10^2	1.15×10^3	1.32×10^3	1.48×10^3	1.65×10^3
	STS/STL	Push	-	1.96×10^2	2.95×10^2	3.93×10^2	5.89×10^2	7.85×10^2	9.82×10^2	1.18×10^3	1.37×10^3	1.57×10^3	1.77×10^3	1.96×10^3
		Pull	-	1.65×10^2	2.47×10^2	3.30×10^2	4.95×10^2	6.60×10^2	8.25×10^2	9.90×10^2	1.15×10^3	1.32×10^3	1.48×10^3	1.65×10^3
	STK/STK-M	Push	-	1.96×10^2	2.95×10^2	3.93×10^2	5.89×10^2	7.85×10^2	9.82×10^2	1.18×10^3	1.37×10^3	1.57×10^3	1.77×10^3	1.96×10^3
		Pull	-	1.26×10^2	1.88×10^2	2.51×10^2	3.77×10^2	5.03×10^2	6.28×10^2	7.54×10^2	8.80×10^2	1.01×10^3	1.13×10^3	1.26×10^3
	STK-Y1/ STK-MY1	Push	-	1.96×10^2	2.95×10^2	3.93×10^2	5.89×10^2	7.85×10^2	9.82×10^2	1.18×10^3	1.37×10^3	1.57×10^3	1.77×10^3	1.96×10^3
		Pull	-	40.9	1.04×10^2	1.67×10^2	2.92×10^2	4.18×10^2	5.44×10^2	6.69×10^2	7.95×10^2	9.21×10^2	1.05×10^3	1.17×10^3
	UFCD	Push	-	-	-	3.86×10^2	5.80×10^2	7.73×10^2	9.66×10^2	1.16×10^3	1.35×10^3	-	-	-
		Pull	-	-	-	3.24×10^2	4.85×10^2	6.47×10^2	8.09×10^2	9.71×10^2	1.13×10^3	-	-	-
	MFC-BS	Push	-	-	-	3.93×10^2	5.89×10^2	7.85×10^2	9.82×10^2	1.18×10^3	1.37×10^3	1.57×10^3	1.77×10^3	1.96×10^3
		Pull	-	-	-	3.30×10^2	4.95×10^2	6.60×10^2	8.25×10^2	9.90×10^2	1.15×10^3	1.32×10^3	1.48×10^3	1.65×10^3
	SRT3	Push	-	1.99×10^2	2.98×10^2	3.98×10^2	5.96×10^2	7.95×10^2	9.94×10^2	1.19×10^3	1.39×10^3	-	-	-
		Pull	-	1.99×10^2	2.98×10^2	3.98×10^2	5.96×10^2	7.95×10^2	9.94×10^2	1.19×10^3	1.39×10^3	-	-	-
	CAC4/ UCAC2	Push	-	1.96×10^2	2.95×10^2	3.93×10^2	5.89×10^2	7.85×10^2	9.82×10^2	1.18×10^3	1.37×10^3	1.57×10^3	1.77×10^3	1.96×10^3
		Pull	-	1.65×10^2	2.47×10^2	3.30×10^2	4.95×10^2	6.60×10^2	8.25×10^2	9.90×10^2	1.15×10^3	1.32×10^3	1.48×10^3	1.65×10^3
	RCS2	Push	-	1.96×10^2		3.93×10^2	5.89×10^2	7.85×10^2	9.82×10^2	1.18×10^3	1.37×10^3	1.57×10^3	1.77×10^3	1.96×10^3
		Pull	-	1.65×10^2		3.30×10^2	4.95×10^2	6.60×10^2	8.25×10^2	9.90×10^2	1.15×10^3	1.32×10^3	1.48×10^3	1.65×10^3
	RCC2	Push	-	-	-	3.93×10^2	5.89×10^2	7.85×10^2	9.82×10^2	1.18×10^3	1.37×10^3	1.57×10^3	1.77×10^3	1.96×10^3
		Pull	-	-	-	3.30×10^2	4.95×10^2	6.60×10^2	8.25×10^2	9.90×10^2	1.15×10^3	1.32×10^3	1.48×10^3	1.65×10^3

Theoretical thrust table (double acting)

(Unit: N)

Push ←
Pull →

Bore size (mm)	Compatible models	Operating direction	Working pressure MPa 0.05	0.1	0.15	0.2	0.3	0.4	0.5	0.6	0.7	0.8	0.9	1.0
ø50	GLC	Push	-	-	-	3.93×10^{2}	5.89×10^{2}	7.85×10^{2}	9.82×10^{2}	1.18×10^{3}	1.37×10^{3}	1.57×10^{3}	1.77×10^{3}	1.96×10^{3}
		Pull	-	-	-	2.00×10^{2}	3.00×10^{2}	4.01×10^{2}	5.01×10^{2}	6.01×10^{2}	7.01×10^{2}	8.01×10^{2}	9.01×10^{2}	1.00×10^{3}
ø63	SCG/JSG	Push	1.56×10^{2}	3.12×10^{2}	4.68×10^{2}	6.23×10^{2}	9.35×10^{2}	1.25×10^{3}	1.56×10^{3}	1.87×10^{3}	2.18×10^{3}	2.49×10^{3}	2.81×10^{3}	3.12×10^{3}
		Pull	1.40×10^{2}	2.80×10^{2}	4.20×10^{2}	5.61×10^{2}	8.41×10^{2}	1.12×10^{3}	1.40×10^{3}	1.68×10^{3}	1.96×10^{3}	2.24×10^{3}	2.52×10^{3}	2.80×10^{3}
	SCA2/JSC3/HCA/HCM SCM/SSD2/SSD/USC	Push	-	3.12×10^{2}	4.68×10^{2}	6.23×10^{2}	9.35×10^{2}	1.25×10^{3}	1.56×10^{3}	1.87×10^{3}	2.18×10^{3}	2.49×10^{3}	2.81×10^{3}	3.12×10^{3}
		Pull	-	2.80×10^{2}	4.20×10^{2}	5.61×10^{2}	8.41×10^{2}	1.12×10^{3}	1.40×10^{3}	1.68×10^{3}	1.96×10^{3}	2.24×10^{3}	2.52×10^{3}	2.80×10^{3}
	SSG	Push	-	3.12×10^{2}	4.68×10^{2}	6.23×10^{2}	9.35×10^{2}	1.25×10^{3}	1.56×10^{3}	1.87×10^{3}	2.18×10^{3}	2.49×10^{3}	2.81×10^{3}	3.12×10^{3}
		Pull	-	2.80×10^{2}	4.20×10^{2}	5.61×10^{2}	8.41×10^{2}	1.12×10^{3}	1.40×10^{3}	1.68×10^{3}	1.96×10^{3}	2.24×10^{3}	2.52×10^{3}	2.80×10^{3}
	SRL3	Push	-	3.14×10^{2}	4.70×10^{2}	6.27×10^{2}	9.41×10^{2}	1.25×10^{3}	1.57×10^{3}	1.88×10^{3}	2.20×10^{3}	-	-	-
		Pull	-	3.14×10^{2}	4.70×10^{2}	6.27×10^{2}	9.41×10^{2}	1.25×10^{3}	1.57×10^{3}	1.88×10^{3}	2.20×10^{3}	-	-	-
	FCD	Push	-	3.18×10^{2}	4.77×10^{2}	6.36×10^{2}	9.53×10^{2}	1.27×10^{3}	1.59×10^{3}	1.91×10^{3}	2.22×10^{3}	-	-	-
		Pull	-	2.86×10^{2}	4.30×10^{2}	5.73×10^{2}	8.59×10^{2}	1.15×10^{3}	1.43×10^{3}	1.72×10^{3}	2.00×10^{3}	-	-	-
	STG	Push	-	3.12×10^{2}	4.68×10^{2}	6.23×10^{2}	9.35×10^{2}	1.25×10^{3}	1.56×10^{3}	1.87×10^{3}	2.18×10^{3}	2.49×10^{3}	2.81×10^{3}	3.12×10^{3}
		Pull	-	2.80×10^{2}	4.20×10^{2}	5.61×10^{2}	8.41×10^{2}	1.12×10^{3}	1.40×10^{3}	1.68×10^{3}	1.96×10^{3}	2.24×10^{3}	2.52×10^{3}	2.80×10^{3}
	STS/STL	Push	-	3.12×10^{2}	4.68×10^{2}	6.23×10^{2}	9.35×10^{2}	1.25×10^{3}	1.56×10^{3}	1.87×10^{3}	2.18×10^{3}	2.49×10^{3}	2.81×10^{3}	3.12×10^{3}
		Pull	-	2.80×10^{2}	4.20×10^{2}	5.61×10^{2}	8.41×10^{2}	1.12×10^{3}	1.40×10^{3}	1.68×10^{3}	1.96×10^{3}	2.24×10^{3}	2.52×10^{3}	2.80×10^{3}
	UFCD	Push	-	-	-	6.36×10^{2}	9.53×10^{2}	1.27×10^{3}	1.59×10^{3}	1.91×10^{3}	2.22×10^{3}	-	-	-
		Pull	-	-	-	5.73×10^{2}	8.59×10^{2}	1.15×10^{3}	1.43×10^{3}	1.72×10^{3}	2.00×10^{3}	-	-	-
	MFC-BS	Push	-	-	-	6.23×10^{2}	9.35×10^{2}	1.25×10^{3}	1.56×10^{3}	1.87×10^{3}	2.18×10^{3}	2.49×10^{3}	2.81×10^{3}	3.12×10^{3}
		Pull	-	-	-	5.61×10^{2}	8.41×10^{2}	1.12×10^{3}	1.40×10^{3}	1.68×10^{3}	1.96×10^{3}	2.24×10^{3}	2.52×10^{3}	2.80×10^{3}
	SRM3	Push	-	3.14×10^{2}	4.70×10^{2}	6.27×10^{2}	9.41×10^{2}	1.25×10^{3}	1.57×10^{3}	1.88×10^{3}	2.20×10^{3}	-	-	-
		Pull	-	3.14×10^{2}	4.70×10^{2}	6.27×10^{2}	9.41×10^{2}	1.25×10^{3}	1.57×10^{3}	1.88×10^{3}	2.20×10^{3}	-	-	-
	SRT3	Push	-	3.14×10^{2}	4.70×10^{2}	6.27×10^{2}	9.41×10^{2}	1.25×10^{3}	1.57×10^{3}	1.88×10^{3}	2.20×10^{3}	-	-	-
		Pull	-	3.14×10^{2}	4.70×10^{2}	6.27×10^{2}	9.41×10^{2}	1.25×10^{3}	1.57×10^{3}	1.88×10^{3}	2.20×10^{3}	-	-	-
	CAC4/UCAC2	Push	-	3.12×10^{2}	4.68×10^{2}	6.23×10^{2}	9.35×10^{2}	1.25×10^{3}	1.56×10^{3}	1.87×10^{3}	2.18×10^{3}	2.49×10^{3}	2.81×10^{3}	3.12×10^{3}
		Pull	-	2.80×10^{2}	4.20×10^{2}	5.61×10^{2}	8.41×10^{2}	1.12×10^{3}	1.40×10^{3}	1.68×10^{3}	1.96×10^{3}	2.24×10^{3}	2.52×10^{3}	2.80×10^{3}
	RCS2	Push	-	3.12×10^{2}	-	6.23×10^{2}	9.35×10^{2}	1.25×10^{3}	1.56×10^{3}	1.87×10^{3}	-	-	-	-
		Pull	-	2.80×10^{2}	-	5.61×10^{2}	8.41×10^{2}	1.12×10^{3}	1.40×10^{3}	1.68×10^{3}	-	-	-	-
	RCC2	Push	-	-	-	6.23×10^{2}	9.35×10^{2}	1.25×10^{3}	1.56×10^{3}	1.87×10^{3}	2.18×10^{3}	2.49×10^{3}	2.81×10^{3}	3.12×10^{3}
		Pull	-	-	-	5.25×10^{2}	7.88×10^{2}	1.05×10^{3}	1.31×10^{3}	1.58×10^{3}	1.84×10^{3}	2.10×10^{3}	2.36×10^{3}	2.63×10^{3}
	GLC	Push	-	-	-	6.23×10^{2}	9.35×10^{2}	1.25×10^{3}	1.56×10^{3}	1.87×10^{3}	2.18×10^{3}	2.49×10^{3}	2.81×10^{3}	3.12×10^{3}
		Pull	-	-	-	3.72×10^{2}	5.58×10^{2}	7.44×10^{2}	9.30×10^{2}	1.12×10^{3}	1.30×10^{3}	1.49×10^{3}	1.67×10^{3}	1.86×10^{3}
ø75	CAV2/COV2	Push	-	-	-	8.84×10^{2}	1.33×10^{3}	1.77×10^{3}	2.21×10^{3}	2.65×10^{3}	3.09×10^{3}	-	-	-
		Pull	-	-	-	7.85×10^{2}	1.18×10^{3}	1.57×10^{3}	1.96×10^{3}	2.36×10^{3}	2.75×10^{3}	-	-	-
ø80	SCG/JSG	Push	2.51×10^{2}	5.03×10^{2}	7.54×10^{2}	1.01×10^{3}	1.51×10^{3}	2.01×10^{3}	2.51×10^{3}	3.02×10^{3}	3.52×10^{3}	4.02×10^{3}	4.52×10^{3}	5.03×10^{3}
		Pull	2.27×10^{2}	4.54×10^{2}	6.80×10^{2}	9.07×10^{2}	1.36×10^{3}	1.81×10^{3}	2.27×10^{3}	2.72×10^{3}	3.17×10^{3}	3.63×10^{3}	4.08×10^{3}	4.54×10^{3}
	SCA2/JSC3/HCA SCM/SSD2/SSD/USC	Push	-	5.03×10^{2}	7.54×10^{2}	1.01×10^{3}	1.51×10^{3}	2.01×10^{3}	2.51×10^{3}	3.02×10^{3}	3.52×10^{3}	4.02×10^{3}	4.52×10^{3}	5.03×10^{3}
		Pull	-	4.54×10^{2}	6.80×10^{2}	9.07×10^{2}	1.36×10^{3}	1.81×10^{3}	2.27×10^{3}	2.72×10^{3}	3.17×10^{3}	3.63×10^{3}	4.08×10^{3}	4.54×10^{3}
	SSG	Push	-	5.03×10^{2}	7.54×10^{2}	1.01×10^{3}	1.51×10^{3}	2.01×10^{3}	2.51×10^{3}	3.02×10^{3}	3.52×10^{3}	4.02×10^{3}	4.52×10^{3}	5.03×10^{3}
		Pull	-	4.54×10^{2}	6.80×10^{2}	9.07×10^{2}	1.36×10^{3}	1.81×10^{3}	2.27×10^{3}	2.72×10^{3}	3.17×10^{3}	3.63×10^{3}	4.08×10^{3}	4.54×10^{3}
	SRL3	Push	-	5.06×10^{2}	7.60×10^{2}	1.01×10^{3}	1.52×10^{3}	2.03×10^{3}	2.53×10^{3}	3.04×10^{3}	3.54×10^{3}	-	-	-
		Pull	-	5.06×10^{2}	7.60×10^{2}	1.01×10^{3}	1.52×10^{3}	2.03×10^{3}	2.53×10^{3}	3.04×10^{3}	3.54×10^{3}	-	-	-
	STG	Push	-	5.03×10^{2}	7.54×10^{2}	1.01×10^{3}	1.51×10^{3}	2.01×10^{3}	2.51×10^{3}	3.02×10^{3}	3.52×10^{3}	4.02×10^{3}	4.52×10^{3}	5.03×10^{3}
		Pull	-	4.54×10^{2}	6.80×10^{2}	9.07×10^{2}	1.36×10^{3}	1.81×10^{3}	2.27×10^{3}	2.72×10^{3}	3.17×10^{3}	3.63×10^{3}	4.08×10^{3}	4.54×10^{3}
	STS/STL	Push	-	5.03×10^{2}	7.54×10^{2}	1.01×10^{3}	1.51×10^{3}	2.01×10^{3}	2.51×10^{3}	3.02×10^{3}	3.52×10^{3}	4.02×10^{3}	4.52×10^{3}	5.03×10^{3}
		Pull	-	4.54×10^{2}	6.80×10^{2}	9.07×10^{2}	1.36×10^{3}	1.81×10^{3}	2.27×10^{3}	2.72×10^{3}	3.17×10^{3}	3.63×10^{3}	4.08×10^{3}	4.54×10^{3}
	MFC-BS	Push	-	-	-	1.01×10^{3}	1.51×10^{3}	2.01×10^{3}	2.51×10^{3}	3.02×10^{3}	3.52×10^{3}	4.02×10^{3}	4.52×10^{3}	5.03×10^{3}
		Pull	-	-	-	9.07×10^{2}	1.36×10^{3}	1.81×10^{3}	2.27×10^{3}	2.72×10^{3}	3.17×10^{3}	3.63×10^{3}	4.08×10^{3}	4.54×10^{3}
	CAC4	Push	-	5.03×10^{2}	7.54×10^{2}	1.01×10^{3}	1.51×10^{3}	2.01×10^{3}	2.51×10^{3}	3.02×10^{3}	3.52×10^{3}	4.02×10^{3}	4.52×10^{3}	5.03×10^{3}
		Pull	-	4.54×10^{2}	6.80×10^{2}	9.07×10^{2}	1.36×10^{3}	1.81×10^{3}	2.27×10^{3}	2.72×10^{3}	3.17×10^{3}	3.63×10^{3}	4.08×10^{3}	4.54×10^{3}
	GLC	Push	-	-	-	1.01×10^{3}	1.51×10^{3}	2.01×10^{3}	2.51×10^{3}	3.02×10^{3}	3.52×10^{3}	4.02×10^{3}	4.52×10^{3}	5.03×10^{3}
		Pull	-	-	-	6.13×10^{2}	9.19×10^{2}	1.23×10^{3}	1.53×10^{3}	1.84×10^{3}	2.14×10^{3}	2.45×10^{3}	2.76×10^{3}	3.06×10^{3}
ø100	CAV2/COV2	Push	-	-	-	1.57×10^{3}	2.36×10^{3}	3.14×10^{3}	3.93×10^{3}	4.71×10^{3}	5.50×10^{3}	-	-	-
		Pull	-	-	-	1.47×10^{3}	2.21×10^{3}	2.95×10^{3}	3.68×10^{3}	4.42×10^{3}	5.15×10^{3}	-	-	-
	SCG/JSG	Push	3.93×10^{2}	7.85×10^{2}	1.18×10^{3}	1.57×10^{3}	2.36×10^{3}	3.14×10^{3}	3.93×10^{3}	4.71×10^{3}	5.50×10^{3}	6.28×10^{3}	7.07×10^{3}	7.85×10^{3}
		Pull	3.57×10^{2}	7.15×10^{2}	1.07×10^{3}	1.43×10^{3}	2.14×10^{3}	2.86×10^{3}	3.57×10^{3}	4.29×10^{3}	5.00×10^{3}	5.72×10^{3}	6.43×10^{3}	7.15×10^{3}
	SCA2/JSC3/HCA SCM/SSD2/SSD/USC	Push	-	7.85×10^{2}	1.18×10^{3}	1.57×10^{3}	2.36×10^{3}	3.14×10^{3}	3.93×10^{3}	4.71×10^{3}	5.50×10^{3}	6.28×10^{3}	7.07×10^{3}	7.85×10^{3}
		Pull	-	7.15×10^{2}	1.07×10^{3}	1.43×10^{3}	2.14×10^{3}	2.86×10^{3}	3.57×10^{3}	4.29×10^{3}	5.00×10^{3}	5.72×10^{3}	6.43×10^{3}	7.15×10^{3}
	SSG	Push	-	7.85×10^{2}	1.18×10^{3}	1.57×10^{3}	2.36×10^{3}	3.14×10^{3}	3.93×10^{3}	4.71×10^{3}	5.50×10^{3}	6.28×10^{3}	7.07×10^{3}	7.85×10^{3}
		Pull	-	7.15×10^{2}	1.07×10^{3}	1.43×10^{3}	2.14×10^{3}	2.86×10^{3}	3.57×10^{3}	4.29×10^{3}	5.00×10^{3}	5.72×10^{3}	6.43×10^{3}	7.15×10^{3}
	SRL3	Push	-	7.91×10^{2}	1.19×10^{3}	1.58×10^{3}	2.37×10^{3}	3.16×10^{3}	3.95×10^{3}	4.74×10^{3}	5.53×10^{3}	-	-	-
		Pull	-	7.91×10^{2}	1.19×10^{3}	1.58×10^{3}	2.37×10^{3}	3.16×10^{3}	3.95×10^{3}	4.74×10^{3}	5.53×10^{3}	-	-	-
	STG	Push	-	7.85×10^{2}	1.18×10^{3}	1.57×10^{3}	2.36×10^{3}	3.14×10^{3}	3.93×10^{3}	4.71×10^{3}	5.50×10^{3}	6.28×10^{3}	7.07×10^{3}	7.85×10^{3}
		Pull	-	7.15×10^{2}	1.07×10^{3}	1.43×10^{3}	2.14×10^{3}	2.86×10^{3}	3.57×10^{3}	4.29×10^{3}	5.00×10^{3}	5.72×10^{3}	6.43×10^{3}	7.15×10^{3}
	STS/STL	Push	-	7.85×10^{2}	1.18×10^{3}	1.57×10^{3}	2.36×10^{3}	3.14×10^{3}	3.93×10^{3}	4.71×10^{3}	5.50×10^{3}	6.28×10^{3}	7.07×10^{3}	7.85×10^{3}
		Pull	-	7.15×10^{2}	1.07×10^{3}	1.43×10^{3}	2.14×10^{3}	2.86×10^{3}	3.57×10^{3}	4.29×10^{3}	5.00×10^{3}	5.72×10^{3}	6.43×10^{3}	7.15×10^{3}
	GLC	Push	-	-	-	1.57×10^{3}	2.36×10^{3}	3.14×10^{3}	3.93×10^{3}	4.71×10^{3}	5.50×10^{3}	6.28×10^{3}	7.07×10^{3}	7.85×10^{3}
		Pull	-	-	-	1.01×10^{3}	1.51×10^{3}	2.01×10^{3}	2.51×10^{3}	3.02×10^{3}	3.52×10^{3}	4.02×10^{3}	4.52×10^{3}	5.03×10^{3}
ø125	SCS2/JSC4 SSD	Push	-	1.23×10^{3}	1.84×10^{3}	2.45×10^{3}	3.68×10^{3}	4.91×10^{3}	6.14×10^{3}	7.36×10^{3}	8.59×10^{3}	9.82×10^{3}	1.10×10^{4}	1.23×10^{4}
		Pull	-	1.13×10^{3}	1.70×10^{3}	2.26×10^{3}	3.39×10^{3}	4.52×10^{3}	5.65×10^{3}	6.79×10^{3}	7.92×10^{3}	9.05×10^{3}	1.02×10^{4}	1.13×10^{4}
ø140	SCS2/JSC4 SSD	Push	-	1.54×10^{3}	2.31×10^{3}	3.08×10^{3}	4.62×10^{3}	6.16×10^{3}	7.70×10^{3}	9.24×10^{3}	1.08×10^{4}	1.23×10^{4}	1.39×10^{4}	1.54×10^{4}
		Pull	-	1.44×10^{3}	2.16×10^{3}	2.89×10^{3}	4.33×10^{3}	5.77×10^{3}	7.22×10^{3}	8.66×10^{3}	1.01×10^{4}	1.15×10^{4}	1.30×10^{4}	1.44×10^{4}
ø160	SCS2/JSC4 SSD	Push	-	2.01×10^{3}	3.02×10^{3}	4.02×10^{3}	6.03×10^{3}	8.04×10^{3}	1.01×10^{4}	1.21×10^{4}	1.41×10^{4}	1.61×10^{4}	1.81×10^{4}	2.01×10^{4}
		Pull	-	1.88×10^{3}	2.83×10^{3}	3.77×10^{3}	5.65×10^{3}	7.54×10^{3}	9.42×10^{3}	1.13×10^{4}	1.32×10^{4}	1.51×10^{4}	1.70×10^{4}	1.88×10^{4}
ø180	SCS2/JSC4	Push	-	2.54×10^{3}	3.82×10^{3}	5.09×10^{3}	7.63×10^{3}	1.02×10^{4}	1.27×10^{4}	1.53×10^{4}	1.78×10^{4}	2.04×10^{4}	2.29×10^{4}	2.54×10^{4}
		Pull	-	2.39×10^{3}	3.58×10^{3}	4.77×10^{3}	7.16×10^{3}	9.54×10^{3}	1.19×10^{4}	1.43×10^{4}	1.67×10^{4}	1.91×10^{4}	2.15×10^{4}	2.39×10^{4}
ø200	SCS2	Push	-	3.14×10^{3}	4.71×10^{3}	6.28×10^{3}	9.42×10^{3}	1.26×10^{4}	1.57×10^{4}	1.88×10^{4}	2.20×10^{4}	2.51×10^{4}	2.83×10^{4}	3.14×10^{4}
		Pull	-	2.95×10^{3}	4.42×10^{3}	5.89×10^{3}	8.84×10^{3}	1.18×10^{4}	1.47×10^{4}	1.77×10^{4}	2.06×10^{4}	2.36×10^{4}	2.65×10^{4}	2.95×10^{4}
ø250	SCS2	Push	-	4.91×10^{3}	7.36×10^{3}	9.82×10^{3}	1.47×10^{4}	1.96×10^{4}	2.45×10^{4}	2.95×10^{4}	3.44×10^{4}	3.93×10^{4}	4.42×10^{4}	4.91×10^{4}
		Pull	-	4.63×10^{3}	6.94×10^{3}	9.25×10^{3}	1.39×10^{4}	1.85×10^{4}	2.31×10^{4}	2.78×10^{4}	3.24×10^{4}	3.70×10^{4}	4.16×10^{4}	4.63×10^{4}

Theoretical thrust table (double acting)

(Unit: N)

Push ←
Pull →

	Bore size (mm)	Operating direction	Piston position	Working pressure MPa 0.2	0.3	0.4	0.5	0.6	0.7	0.8	0.9	1.0
SHC	ø40	Push	Thrust	2.51×10^{2}	3.76×10^{2}	5.02×10^{2}	6.28×10^{2}	7.53×10^{2}	8.79×10^{2}	1.0×10^{3}	1.13×10^{3}	-
			Booster	5.2×10^{2}	7.8×10^{2}	1.04×10^{3}	1.30×10^{3}	1.56×10^{3}	1.82×10^{3}	2.08×10^{3}	2.34×10^{3}	-
		Pull	Thrust	1.28×10^{2}	1.92×10^{2}	2.56×10^{2}	3.20×10^{2}	3.84×10^{2}	4.48×10^{2}	5.12×10^{2}	5.76×10^{2}	-
			Booster	3.97×10^{2}	5.96×10^{2}	7.95×10^{2}	9.94×10^{2}	1.19×10^{3}	1.39×10^{3}	1.59×10^{3}	1.79×10^{3}	-
	ø50	Push	Thrust	3.92×10^{2}	5.88×10^{2}	7.85×10^{2}	9.81×10^{2}	1.18×10^{3}	1.37×10^{3}	1.57×10^{3}	1.77×10^{3}	-
			Booster	8.55×10^{2}	1.28×10^{3}	1.71×10^{3}	2.14×10^{3}	2.57×10^{3}	2.99×10^{3}	3.42×10^{3}	3.85×10^{3}	-
		Pull	Thrust	2.31×10^{2}	3.47×10^{2}	4.63×10^{2}	5.79×10^{2}	6.95×10^{2}	8.11×10^{2}	9.27×10^{2}	1.04×10^{3}	-
			Booster	6.94×10^{2}	1.04×10^{3}	1.39×10^{3}	1.74×10^{3}	2.08×10^{3}	2.43×10^{3}	2.78×10^{3}	3.12×10^{3}	-
	ø63	Push	Thrust	6.23×10^{2}	9.35×10^{2}	1.25×10^{3}	1.56×10^{3}	1.87×10^{3}	2.18×10^{3}	2.49×10^{3}	2.81×10^{3}	-
			Booster	1.26×10^{3}	1.88×10^{3}	2.51×10^{3}	3.14×10^{3}	3.77×10^{3}	4.39×10^{3}	5.02×10^{3}	5.65×10^{3}	-
		Pull	Thrust	3.72×10^{2}	5.58×10^{2}	7.44×10^{2}	9.30×10^{2}	1.12×10^{3}	1.30×10^{3}	1.49×10^{3}	1.67×10^{3}	-
			Booster	1.04×10^{3}	1.51×10^{3}	2.01×10^{3}	2.51×10^{3}	3.01×10^{3}	3.52×10^{3}	4.02×10^{3}	4.52×10^{3}	-
	ø80	Push	Thrust	1.01×10^{3}	1.51×10^{3}	2.01×10^{3}	2.51×10^{3}	3.02×10^{3}	3.52×10^{3}	4.02×10^{3}	4.52×10^{3}	-
			Booster	1.88×10^{3}	2.82×10^{3}	3.77×10^{3}	4.71×10^{3}	5.65×10^{3}	6.59×10^{3}	7.53×10^{3}	8.47×10^{3}	-
		Pull	Thrust	6.12×10^{2}	9.18×10^{2}	1.23×10^{3}	1.53×10^{3}	1.84×10^{3}	2.14×10^{3}	2.45×10^{3}	2.76×10^{3}	-
			Booster	1.49×10^{3}	2.24×10^{3}	2.98×10^{3}	3.73×10^{3}	4.47×10^{3}	5.22×10^{3}	5.96×10^{3}	6.71×10^{3}	-
	ø100	Push	Thrust	1.57×10^{3}	2.36×10^{3}	3.14×10^{3}	3.93×10^{3}	4.71×10^{3}	5.5×10^{3}	6.28×10^{3}	7.07×10^{3}	-
			Booster	2.91×10^{3}	4.36×10^{3}	5.81×10^{3}	7.26×10^{3}	8.72×10^{3}	1.02×10^{4}	1.16×10^{4}	1.31×10^{4}	-
		Pull	Thrust	1.01×10^{3}	1.51×10^{3}	2.01×10^{3}	2.51×10^{3}	3.02×10^{3}	3.52×10^{3}	4.02×10^{3}	4.52×10^{3}	-
			Booster	2.34×10^{3}	3.51×10^{3}	4.68×10^{3}	5.85×10^{3}	7.02×10^{3}	8.19×10^{3}	9.36×10^{3}	1.05×10^{4}	-
SHC-K	ø40	Push	Thrust	2.51×10^{2}	3.76×10^{2}	5.02×10^{2}	6.28×10^{2}	7.53×10^{2}	8.79×10^{2}	1.0×10^{3}	1.13×10^{3}	-
			Booster	1.13×10^{3}	1.70×10^{3}	2.27×10^{3}	2.83×10^{3}	3.40×10^{3}	3.97×10^{3}	4.53×10^{3}	5.10×10^{3}	-
		Pull	Thrust	1.28×10^{2}	1.92×10^{2}	2.56×10^{2}	3.20×10^{2}	3.84×10^{2}	4.48×10^{2}	5.12×10^{2}	5.76×10^{2}	-
			Booster	1.01×10^{3}	1.52×10^{3}	2.02×10^{3}	2.53×10^{3}	3.03×10^{3}	3.54×10^{3}	4.04×10^{3}	4.55×10^{3}	-
	ø50	Push	Thrust	3.92×10^{2}	5.88×10^{2}	7.85×10^{2}	9.81×10^{2}	1.18×10^{3}	1.37×10^{3}	1.57×10^{3}	1.77×10^{3}	-
			Booster	1.80×10^{3}	2.70×10^{3}	3.60×10^{3}	4.51×10^{3}	5.41×10^{3}	6.31×10^{3}	7.21×10^{3}	8.11×10^{3}	-
		Pull	Thrust	2.31×10^{2}	3.47×10^{2}	4.63×10^{2}	5.79×10^{2}	6.95×10^{2}	8.11×10^{2}	9.27×10^{2}	1.04×10^{3}	-
			Booster	1.64×10^{3}	2.46×10^{3}	3.28×10^{3}	4.10×10^{3}	4.92×10^{3}	5.75×10^{3}	6.57×10^{3}	7.39×10^{3}	-
	ø63	Push	Thrust	6.23×10^{2}	9.35×10^{2}	1.25×10^{3}	1.56×10^{3}	1.87×10^{3}	2.18×10^{3}	2.49×10^{3}	2.81×10^{3}	-
			Booster	2.83×10^{3}	4.24×10^{3}	5.65×10^{3}	7.07×10^{3}	8.48×10^{3}	9.89×10^{3}	1.13×10^{4}	1.27×10^{4}	-
		Pull	Thrust	3.72×10^{2}	5.58×10^{2}	7.44×10^{2}	9.30×10^{2}	1.12×10^{3}	1.30×10^{3}	1.49×10^{3}	1.67×10^{3}	-
			Booster	2.58×10^{3}	3.86×10^{3}	5.15×10^{3}	6.44×10^{3}	7.73×10^{3}	9.01×10^{3}	1.03×10^{4}	1.16×10^{4}	-
	ø80	Push	Thrust	1.01×10^{3}	1.51×10^{3}	2.01×10^{3}	2.51×10^{3}	3.02×10^{3}	3.52×10^{3}	4.02×10^{3}	4.52×10^{3}	-
			Booster	4.63×10^{3}	6.95×10^{3}	9.27×10^{3}	1.16×10^{4}	1.39×10^{4}	1.62×10^{4}	1.85×10^{4}	2.09×10^{4}	-
		Pull	Thrust	6.12×10^{2}	9.18×10^{2}	1.23×10^{3}	1.53×10^{3}	1.84×10^{3}	2.14×10^{3}	2.45×10^{3}	2.76×10^{3}	-
			Booster	4.24×10^{3}	6.36×10^{3}	8.48×10^{3}	1.06×10^{4}	1.27×10^{4}	1.48×10^{4}	1.70×10^{4}	1.91×10^{4}	-
	ø100	Push	Thrust	1.57×10^{3}	2.36×10^{3}	3.14×10^{3}	3.93×10^{3}	4.71×10^{3}	5.50×10^{3}	6.28×10^{3}	7.07×10^{3}	-
			Booster	7.29×10^{3}	1.09×10^{4}	1.46×10^{4}	1.82×10^{4}	2.19×10^{4}	2.55×10^{4}	2.91×10^{4}	3.28×10^{4}	-
		Pull	Thrust	1.01×10^{3}	1.51×10^{3}	2.01×10^{3}	2.51×10^{3}	3.02×10^{3}	3.52×10^{3}	4.02×10^{3}	4.52×10^{3}	-
			Booster	6.72×10^{3}	1.01×10^{4}	1.34×10^{4}	1.68×10^{4}	2.02×10^{4}	2.35×10^{4}	2.69×10^{4}	3.02×10^{4}	-

Note: When the booster section is pulled (backward), due to product structure, theoretical thrust is reduced to approximately 70%.

Theoretical thrust table (single acting push) Thrust during push

(Unit: N)

Bore size (mm)	Compatible models	Push ← Working pressure MPa 0.2	0.3	0.4	0.5	0.6	0.7	0.8	0.9	1.0
ø2.5	SCPS	-	-	0.793	1.28	1.78	2.27	2.76	3.25	3.74
ø4		-	-	2.19	3.44	4.70	5.96	7.21	8.47	9.73
ø6	SCPS3	-	4.8	7.6	10.4	13.3	16.1	18.9	21.7	24.6
ø10		8.2	16.1	23.9	31.8	39.6	47.5	55.3	63.2	71.0
ø16		25.3	45.4	65.5	85.6	105.7	125.8	145.9	166.1	186.2
ø6	MSD-X	-	3.58	6.41	9.24	12.1	14.9	17.7	20.5	23.4
ø8		-	8.22	13.2	18.3	23.3	28.3	33.4	38.4	43.4
ø6	SMG-X	-	4.68	7.51	10.3	13.2	16.0	-	-	-
ø10		7.71	15.6	23.4	31.3	39.1	47.0	-	-	-
ø16		24.2	44.3	64.4	84.5	1.05×10^2	1.25×10^2	-	-	-
ø20		43.8	75.2	1.07×10^2	1.38×10^2	1.69×10^2	2.01×10^2	-	-	-
ø25		73.2	1.22×10^2	1.71×10^2	2.20×10^2	2.70×10^2	3.19×10^2	-	-	-
ø32		1.31×10^2	2.11×10^2	2.92×10^2	3.72×10^2	4.53×10^2	5.33×10^2	-	-	-
ø25	FCS	-	1.12×10^2	1.62×10^2	2.11×10^2	2.60×10^2	3.09×10^2	-	-	-
ø32		-	1.85×10^2	2.63×10^2	3.41×10^2	4.18×10^2	4.96×10^2	-	-	-
ø40		2.11×10^2	3.40×10^2	4.69×10^2	5.98×10^2	7.27×10^2	8.56×10^2	-	-	-
ø50		3.11×10^2	5.05×10^2	6.98×10^2	8.91×10^2	1.08×10^3	1.28×10^3	-	-	-
ø63		5.16×10^2	8.34×10^2	1.15×10^3	1.47×10^3	1.79×10^3	2.10×10^3	-	-	-
ø12	SSD2-X/ SSD-X	8.9	20.2	31.5	42.8	54.2	65.5	76.8	88.1	99.4
ø16		25.1	45.2	65.3	85.4	1.06×10^2	1.26×10^2	1.46×10^2	1.66×10^2	1.86×10^2
ø20		38.8	70.2	1.02×10^2	1.33×10^2	1.64×10^2	1.96×10^2	2.27×10^2	2.59×10^2	2.90×10^2
ø25		74.7	1.24×10^2	1.73×10^2	2.22×10^2	2.71×10^2	3.20×10^2	3.69×10^2	4.18×10^2	4.67×10^2
ø32		1.32×10^2	2.13×10^2	2.93×10^2	3.74×10^2	4.54×10^2	5.34×10^2	6.15×10^2	6.95×10^2	7.76×10^2
ø40		2.13×10^2	3.39×10^2	4.64×10^2	5.90×10^2	7.16×10^2	8.41×10^2	9.67×10^2	1.09×10^3	1.22×10^3
ø50		3.45×10^2	5.41×10^2	7.37×10^2	9.34×10^2	1.13×10^3	1.33×10^3	1.52×10^3	1.72×10^3	1.92×10^3

Theoretical thrust table (single acting pull) Thrust during pull

(Unit: N)

Bore size (mm)	Compatible models	Pull → Working pressure MPa 0.2	0.3	0.4	0.5	0.6	0.7	0.8	0.9	1.0
ø6	SCPH3	-	-	4.8	6.9	9.0	11.1	13.3	15.4	17.5
ø10		5.7	12.3	18.9	25.5	32.1	38.7	45.3	51.9	58.5
ø16		21.4	38.5	57.7	75.8	94.0	112.1	130.2	148.4	166.5
ø6	MSD-Y	-	-	1.38	2.95	4.52	6.10	7.67	9.24	10.8
ø8		-	2.33	5.39	8.46	11.5	14.6	17.6	20.7	23.8
ø6	SMG-Y	-	2.56	4.68	6.80	8.92	11.0	-	-	-
ø10		5.19	11.8	18.4	25.0	31.6	38.2	-	-	-
ø16		18.6	35.8	53.1	70.4	87.7	1.05×10^2	-	-	-
ø20		33.8	60.2	86.6	1.13×10^2	1.39×10^2	1.66×10^2	-	-	-
ø25		57.5	98.7	1.40×10^2	1.81×10^2	2.22×10^2	2.64×10^2	-	-	-
ø32		1.08×10^2	1.77×10^2	2.46×10^2	3.16×10^2	3.85×10^2	4.54×10^2	-	-	-
ø25	FCH	-	78.5	1.16×10^2	1.54×10^2	1.92×10^2	2.30×10^2	-	-	-
ø32		-	1.25×10^2	1.83×10^2	2.40×10^2	2.98×10^2	3.55×10^2	-	-	-
ø40		1.70×10^2	2.79×10^2	3.88×10^2	4.97×10^2	6.06×10^2	7.15×10^2	-	-	-
ø50		2.49×10^2	4.10×10^2	5.72×10^2	7.34×10^2	8.96×10^2	1.06×10^3	-	-	-
ø63		4.53×10^2	7.39×10^2	1.03×10^3	1.31×10^3	1.60×10^3	1.88×10^3	-	-	-
ø20	STK-Y/ STK-MY	-	45.6	65.7	85.8	1.06×10^2	1.26×10^2	1.46×10^2	1.66×10^2	1.86×10^2
ø32		66.6	1.16×10^2	1.65×10^2	2.14×10^2	2.63×10^2	3.12×10^2	3.61×10^2	4.10×10^2	4.59×10^2
ø40		1.09×10^2	1.85×10^2	2.62×10^2	3.38×10^2	4.15×10^2	4.92×10^2	5.68×10^2	6.45×10^2	7.21×10^2
ø50		1.67×10^2	2.92×10^2	4.18×10^2	5.44×10^2	6.69×10^2	7.95×10^2	9.21×10^2	1.05×10^3	1.17×10^3

Bore size (mm)	Compatible models	Stroke mm 5	10	5	10	5	10	5	10	5	10	5	10	5	10	5	10	5	10
ø12	SSD2-Y/ SSD-Y	5.96	5.66	14.4	14.1	22.9	22.6	31.4	31.1	39.9	39.6	48.4	48.1	56.9	56.6	65.3	65.0	73.8	73.5
ø16		17.0	17.0	32.0	32.0	47.1	47.1	62.2	62.2	77.3	77.3	92.4	92.4	1.07×10^2	1.07×10^2	1.23×10^2	1.23×10^2	1.38×10^2	1.38×10^2
ø20		16.7	16.8	40.3	40.4	63.8	63.9	87.4	87.5	1.11×10^2	1.11×10^2	1.35×10^2	1.35×10^2	1.58×10^2	1.58×10^2	1.82×10^2	1.82×10^2	2.05×10^2	2.05×10^2
ø25		49.1	49.1	86.8	86.8	1.25×10^2	1.25×10^2	1.62×10^2	1.62×10^2	2.00×10^2	2.00×10^2	2.38×10^2	2.38×10^2	2.76×10^2	2.76×10^2	3.13×10^2	3.13×10^2	3.51×10^2	3.51×10^2
ø32		93.6	93.2	1.54×10^2	1.54×10^2	2.14×10^2	2.14×10^2	2.75×10^2	2.74×10^2	3.35×10^2	3.35×10^2	3.95×10^2	3.95×10^2	4.56×10^2	4.55×10^2	5.16×10^2	5.15×10^2	5.76×10^2	5.76×10^2
		Stroke mm 10	20	10	20	10	20	10	20	10	20	10	20	10	20	10	20	10	20
ø40	SSD2-Y/ SSD-Y	1.78×10^2	1.71×10^2	2.84×10^2	2.76×10^2	3.89×10^2	3.82×10^2	4.95×10^2	4.88×10^2	6.00×10^2	5.93×10^2	7.06×10^2	6.99×10^2	8.11×10^2	8.04×10^2	9.17×10^2	9.10×10^2	1.02×10^3	1.02×10^3
ø50		2.46×10^2	2.48×10^2	4.11×10^2	4.13×10^2	5.75×10^2	5.77×10^2	7.40×10^2	7.42×10^2	9.05×10^2	9.07×10^2	1.07×10^3	1.07×10^3	1.24×10^3	1.24×10^3	1.40×10^3	1.40×10^3	1.57×10^3	1.57×10^3

Cylinder bore size selection nomogram

● In the case of 10 to 100 mm bore and rod push direction.

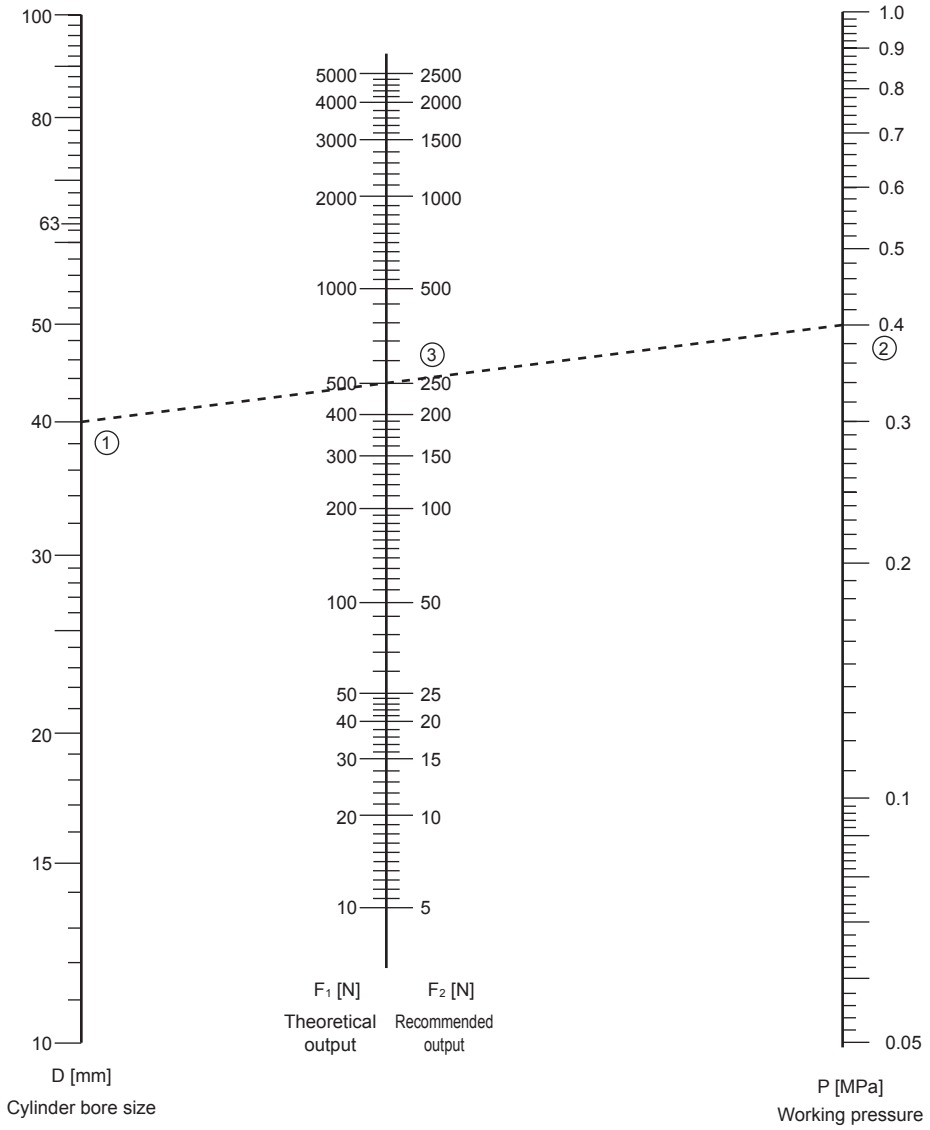

This nomogram was created according to the following formula.

$$F_1 = \frac{\pi}{4} \times D^2/P$$

However, F_1: Theoretical output [N]

F_2: Recommended output (at 50% efficiency) [N]

D : Cylinder bore size [mm]

P : Operating pressure [MPa]

(Example) When operating a ø40 bore cylinder with 0.4 MPa pneumatic pressure, what is the theoretical output?

(Answer) Connect D and P to find the point on F; this leads to the theoretical output F ≈ 500 N.

Cylinder bore size selection nomogram

● In the case of 100 to 250 mm bore and rod push direction.

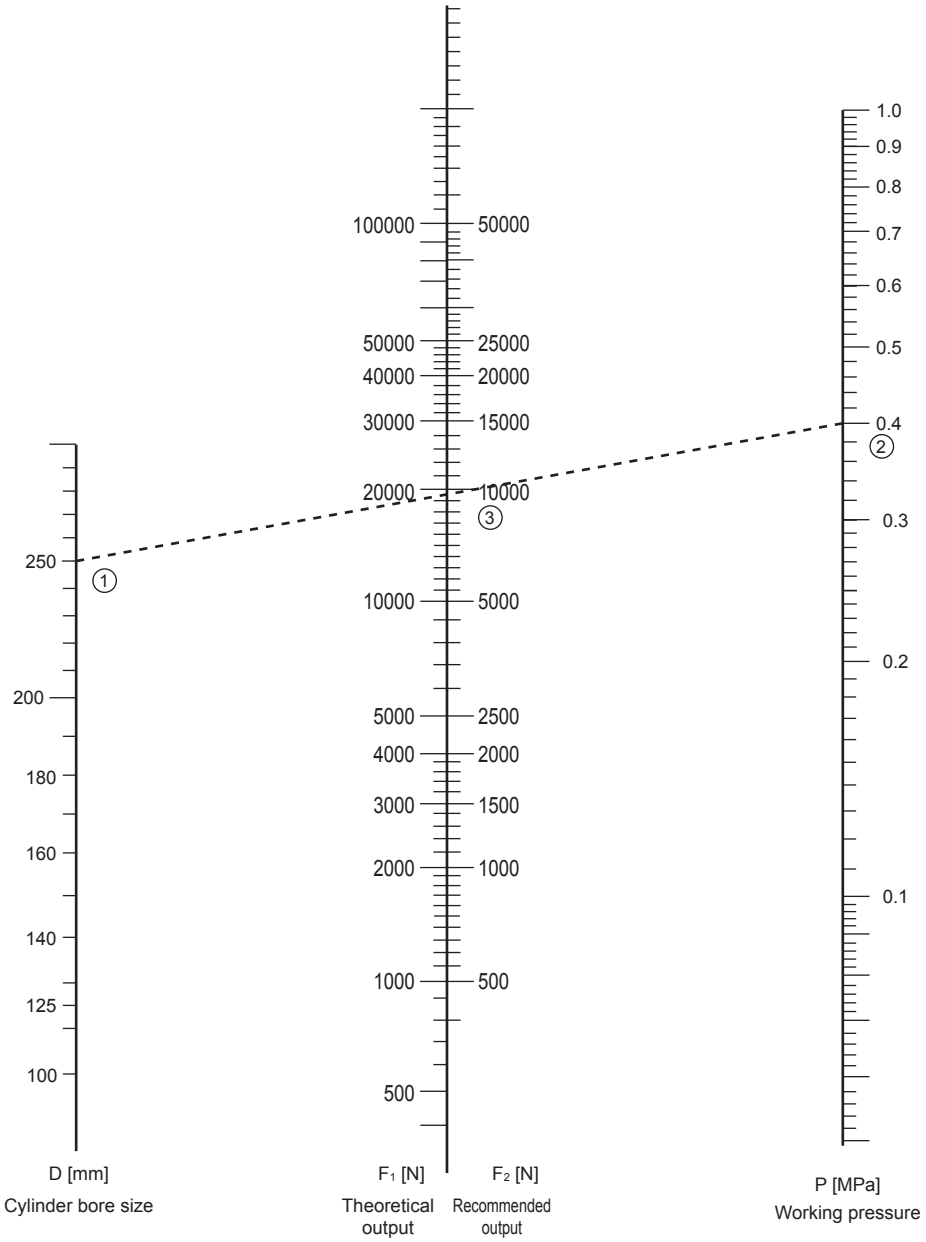

This nomogram was created according to the following formula.

$$F_1 = \frac{\pi}{4} \times D^2/P$$

However, F_1: Theoretical output [N]

F_2: Recommended output (at 50% efficiency) [N]

D: Cylinder bore size [mm]

P: Operating pressure [MPa]

(Example) When operating a ø250 bore cylinder with 0.4 MPa pneumatic pressure, what is the theoretical output?

(Answer) Connect D and P to find the point on F; this leads to the theoretical output F ≈ 19000N.

Required flow rate of cylinder during operation (within bore size 100 mm)

● Q: Required flow rate ℓ/min. per stroke 100 mm

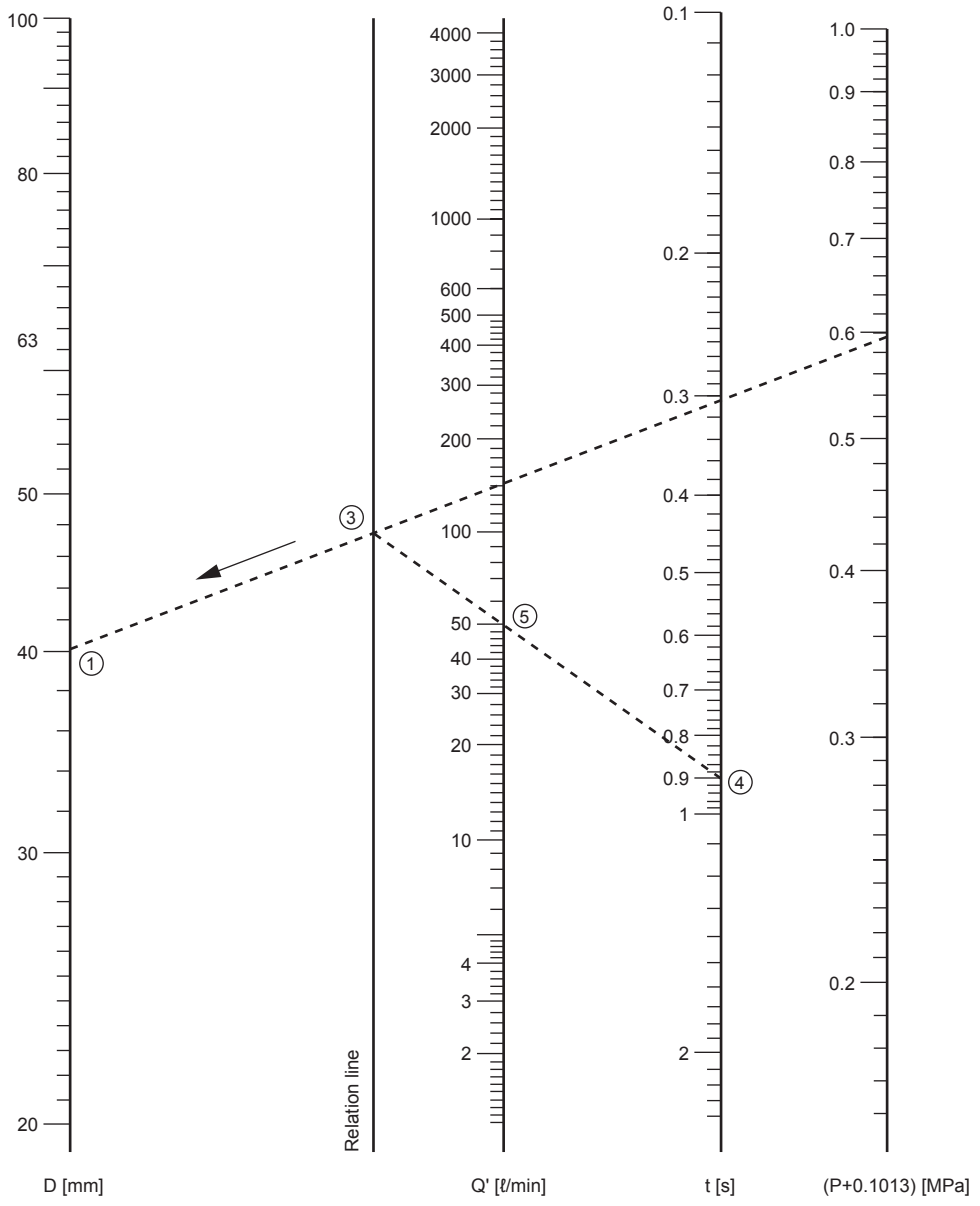

1. Required flow rate formula of cylinder during operation

The required flow rate means the instantaneous flow rate that flows during cylinder operation.
This is different from air consumption of cylinder. Do not confuse them.

$$Q = \frac{\pi}{4} \cdot D^2 \frac{L}{t} \cdot \frac{P+0.1013}{0.1013} \times 10^{-6} \times 60$$

Q: Flow rate [ℓ/min] (ANR)
D: Cylinder bore size [mm]
L: Stroke [mm]
t: Travel time of stroke [s]
P: Working pressure [MPa]

(Example 1 in above fig.) When operating a 40 mm bore cylinder with 0.5 MPa air pressure, and 0.9 s per 100 mm stroke, required flow is:

(Answer) Find the point on the relation line from D and (P + 0.1013), then obtain Q' = 50 (ℓ/min) from the point on the relation line and t.

(Example 2 in figure at next page diag.) When operating a 250 mm bore cylinder with 0.4 MPa air pressure, and 1 s per 100 mm stroke, required flow is:

(Answer) Find the point on the relation line from D and (P + 0.1013), then obtain Q' = 1450 (ℓ/min) from the point on the relation line and t.

Required flow rate of cylinder during operation (bore size 100 to 250 mm)

● Q: Required flow rate ℓ/min. per stroke 100 mm

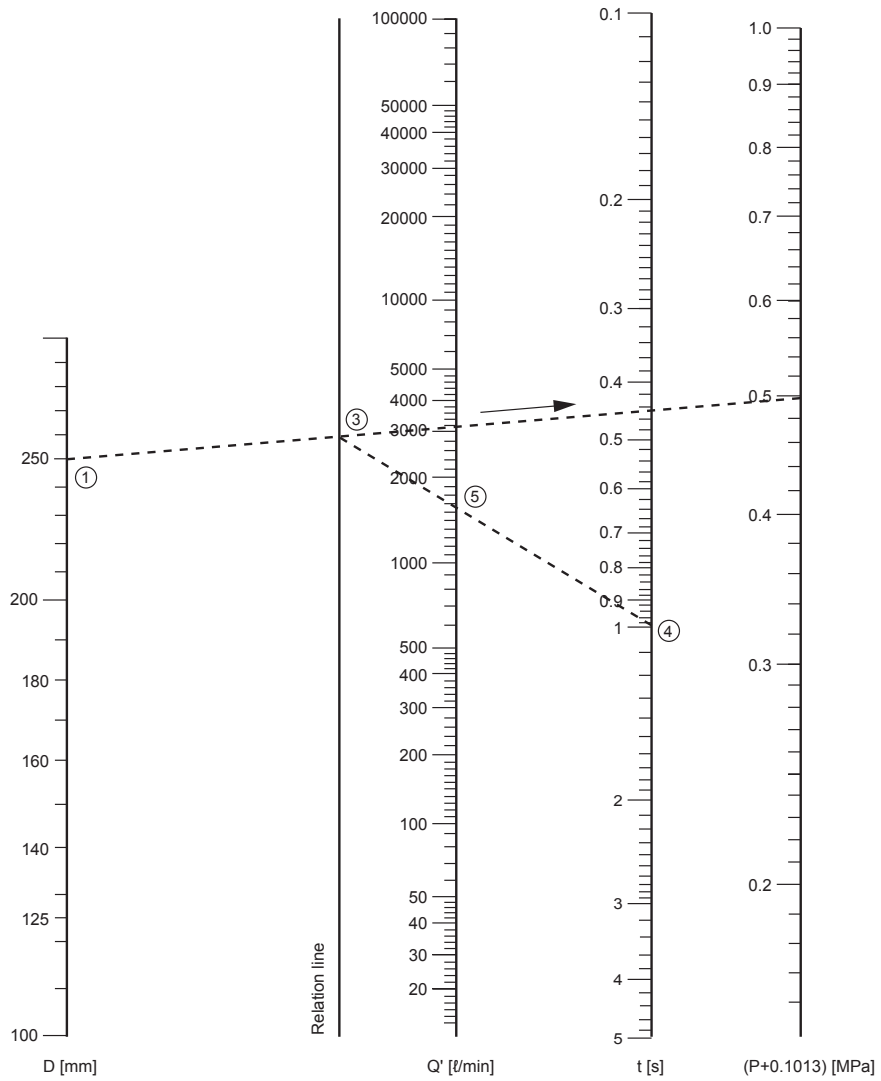

2. Calculating the cylinder's air consumption (per hour)

Air consumption per hour is the amount of air consumed when the cylinder moves within a set time. This is the volume of air consumed by the cylinder and in piping between the cylinder and switching valve. This is not related to cylinder speed and differs from the air flow rate required during operation.

$Q_T = (Q_1 + Q_2 + (2 \times Q_3)) \times n$ [for double acting cylinder]

Q_T : Air consumption per one minute [ℓ/min] (ANR)
n : Operational cycle of cylinder for one minute [time/min]
Q_1 : Air consumption when pushed [ℓ] (ANR)
Q_2 : Air consumption when retracted [ℓ] (ANR)
Q_3 : Piping volume from directional switching valve to each cylinder port [ℓ] (ANR)

$$Q_1 = \frac{\pi}{4} / D^2 \times L \times 10^{-6} \times \left(\frac{P+0.1013}{0.1013}\right)$$

$$Q_2 = \frac{\pi}{4} / (D^2 - d^2) \times L \times 10^{-6} \times \left(\frac{P+0.1013}{0.1013}\right)$$

$$Q_3 = \frac{\pi}{4} / d_3^2 \times L_3 \times 10^{-6} \times \left(\frac{P}{0.1013}\right)$$

D : Cylinder bore size [mm]
d : Piston rod O.D. [mm]
L : Cylinder stroke [mm]
L_3: Pipe length from directional switching valve to cylinder port [mm]
d_3: Pipe bore size from directional switching valve to cylinder port [mm]
P : Working pressure [MPa] (gauge pressure)
(1 ℓ = 1 dm^3.)

(Example) Cylinder bore size 100 mm, rod diameter 30 mm, stroke 800 mm, working pressure 0.5 MPa, number of operations per minute 5 times
Piping bore size 7 mm, piping length 2000 mm

$$Q_1 = \frac{\pi}{4} \times 100^2 \times 800 \times 10^{-6} \times \left(\frac{0.5+0.1013}{0.1013}\right) = 37.3$$

$$Q_2 = \frac{\pi}{4} \times (100^2 - 30^2) \times 800 \times 10^{-6} \times \left(\frac{0.5+0.1013}{0.1013}\right) = 33.9$$

$$Q_3 = \frac{\pi}{4} \times 7^2 \times 2000 \times 10^{-6} \times \left(\frac{0.5}{0.1013}\right) = 0.4$$

$Q_T = (37.3 + 33.9 + (2 \times 0.4)) \times 5 = 360$ [ℓ/min] (ANR)

Allowable absorbed energy value: Cushioned

Cushioned allowable absorbed energy value graph

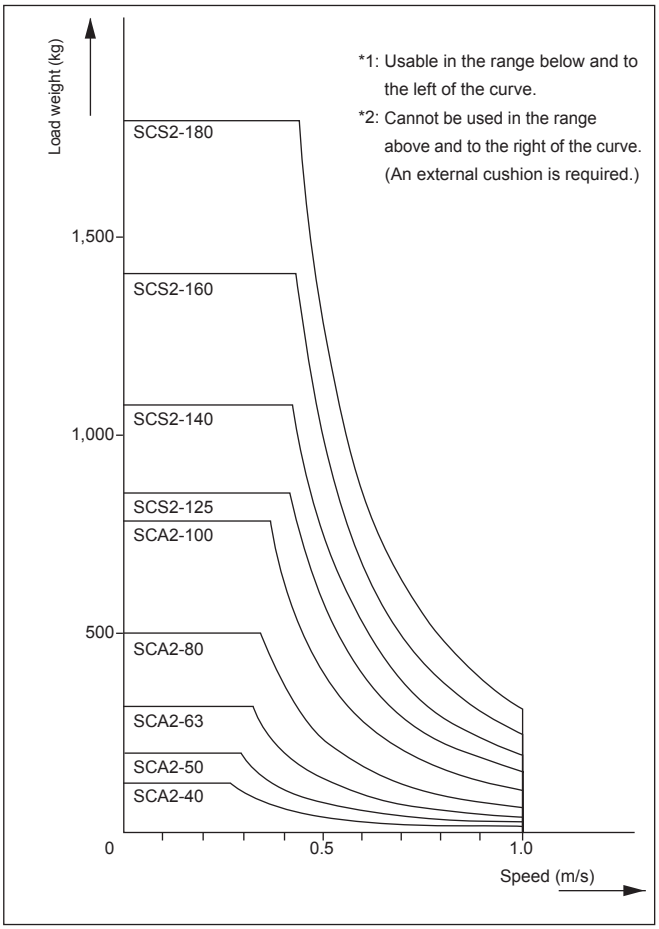

(Note)
Calculating kinetic energy

Average cylinder speed is obtained with $\mu a = \frac{L}{T}$.

μa : Average speed (m/s)
L : Cylinder stroke (m)
T : Operation time (s)

With respect to this, the cylinder speed just before rushing into the cushion can be obtained with the following simple formula.

μm : $= \frac{L}{T} \times (1+1.5\times w)$

μm : Speed just before rush into cushion (m/s)

w : Indicatored decimal value of cylinder load factor (30% and 50% are 0.3 and 0.5 respectively.)

When calculating kinetic energy or using the graph, use this micron value as speed.

● Cushion

The purpose of the cushion is to absorb the piston's kinetic energy with air compressibility, preventing the piston and cover from colliding at the stroke end. Therefore, the cushion itself does not reduce the piston speed at the stroke end.
The table below shows the kinetic energy which can be absorbed by the cushion. If the kinetic energy exceeds these values, or if bouncing caused by the air compressibility is to be avoided, consider using another shock absorber.

$$\text{Kinetic energy (J)} = \frac{1}{2} \times \text{load weight (kg)} \times [\text{speed (m/s)}]^2$$

Cushioned absorbed energy

1.SCA2, JSC3

Bore size (mm)	Effective cushion length (mm)	Allowable absorbed energy (J)
ø40	14.6	4.29
ø50	16.6	8.37
ø63	16.6	15.8
ø80	20.6	27.9
ø100	23.6	49.8

2.SCG, SCM, JSG

Bore size (mm)	Effective cushion length (mm)	Allowable absorbed energy (J)	Remarks
ø20	8.1	0.8	SCM only
ø25	8.1	1.2	
ø32	8.6	2.5	
ø40	8.6	3.7	
ø50	13.4	8.0	
ø63	13.4	14.4	
ø80	15.4	25.4	
ø100	15.4	45.6	

3.SCS2, JSC4

Bore size (mm)	Effective cushion length (mm)	Allowable absorbed energy (J)
ø125	21.6	63.5
ø140	21.6	91.5
ø160	21.6	116
ø180	21.6	152
ø200	26.6	233
ø250	26.6	362

Allowable absorbed energy value: Without cushion

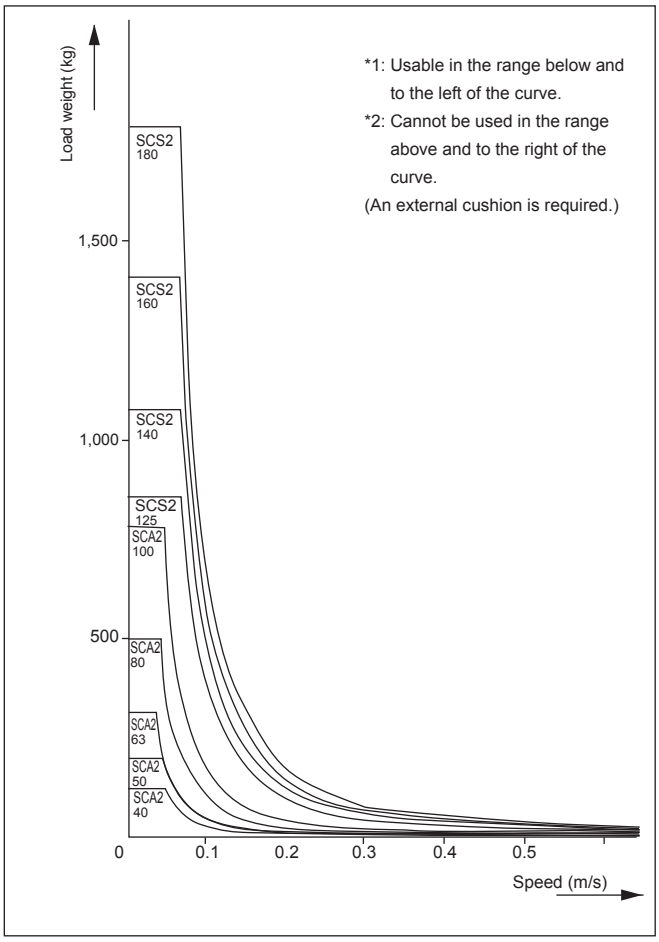

1. Allowable absorbed energy without cushion
   The allowable absorbed energy of each model is shown below.

Allowable absorbed energy without cushion

Unit: J

Code / Bore size (mm)	SCM *1	SCA2	SCS2	CAV2/ COV2
ø40	-	0.067	-	-
ø50	0.057	0.079	-	0.072
ø63	0.057	0.079	-	-
ø75	-	-	-	0.154
ø80	0.112	0.201	-	-
ø100	0.153	0.301	-	0.154
ø125	-	-	0.371	-
ø140	-	-	0.386	-
ø160	-	-	0.386	-
ø180	-	-	0.958	-
ø200	-	-	1.08	-
ø250	-	-	2.32	-

*1: Absorbed energy without cushion applies for cushion codes "R""H".

Allowable absorbed energy value: Without cushion

Max. stroke

D: Cylinder bore size [mm]
F0: Load [N]
L: Max. stroke [mm]

Note
Values in table are calculated values. When exceeding the max. stroke specified for each model, consult with CKD.

Pencil shaped cylinder SCP*3 Series			
D (mm) / F0 (N)	ø6	ø10	ø16
5	570		
10	405	720	
30	230	415	650
50		320	500
100			355

CMA2/CMK2/JSM2 Series			
D (mm) / F0 (N)	ø20	ø25/ø30/ø32	ø40
50	2020		
100	1440	2040	
200	1000	1440	2000
400		1000	1500
600			1160
800			980

SCG/SCA2/JSG/JSC3					
D (mm) / F0 (N)	ø40	ø50	ø63	ø80	ø100
200	2600	4100			
400	1810	2900	2900		
600	1500	2400	2400	3600	
800	1280	2000	2000	3140	4500
1000		1820	1820	2800	4000
1500			1480	2300	3300
2000				1980	2840
2500				1760	2560
3000				1600	2300
3500					2140
4000					2000
5000					1800

SCS2						
D (mm) / F0 (N)	ø125	ø140	ø160	ø180	ø200	ø250
1500	3700	3700				
2000	3200	3200				
2500	2900	2900	4600			
3000	2600	2600	4100	5300		
3500	2400	2400	3800	5000	5900	
4000	2300	2300	3600	4600	5600	
5000	2000	2000	3200	4100	5000	7400
6000	1900	1900	2900	3800	4600	6800
7000	1700	1700	2700	3500	4200	6200
8000		1600	2500	3300	3900	5800
9000		1500	2400	3100	3700	5500
10000			2300	2900	3500	5200
15000				2400	2900	4200
20000					2500	3600
25000						3300
30000						3000

JSC4				
D (mm) / F0 (N)	ø125	ø140	ø160	ø180
1500	4600			
2000	3900	3900		
2500	3500	3500	4600	
3000	3200	3200	4100	5300
3500	3000	3000	3800	5000
4000	2800	2800	3600	4600
5000	2500	2500	3200	4100
6000	2300	2300	2900	3800
7000	2100	2100	2700	3500
8000		2000	2500	3300
9000		1880	2400	3100
10000			2300	2900
15000				2400

Relation between mounting dimensions and max. stroke (L)

1 For both ends pin joint

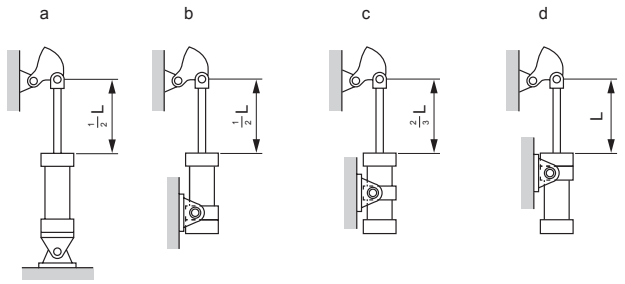

2 For rod end free

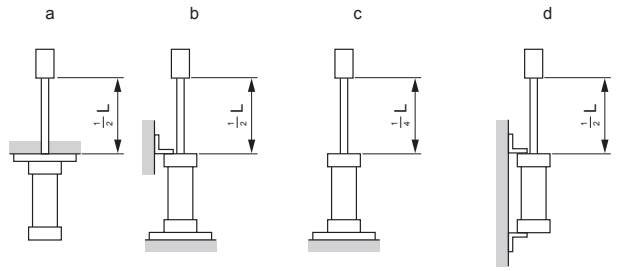

3 For rod end guide (pin joint)

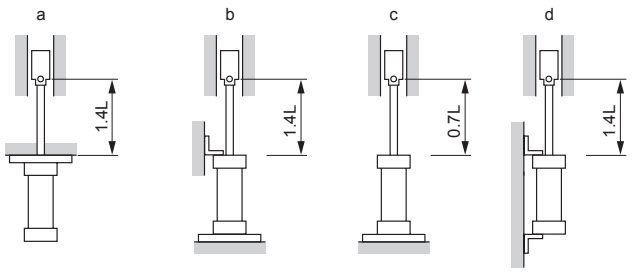

4 For cylinder fixing rod end guide

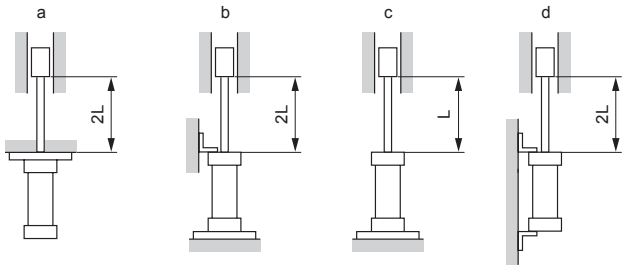

Precautions when max. stroke is exceeded

⚠ CAUTION Note the following if the max. stroke on a model's specifications page is exceeded:

1. Min. working pressure
   The starting pressure is larger since the piston rod sags inside the cylinder.
2. Piston rod buckling
   An internal stopper enabled by contacting the piston with the cylinder cover should be used.
   When using with an external stopper, refer to “Technical data on the relation between mounting dimensions and max. stroke (L)” (Ending Page 69).
3. Tie rod reinforcement
   Insert a non-sag block to keep the tie rod from sagging and contacting the cylinder tube.

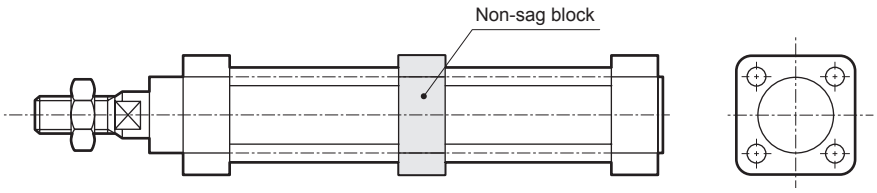

4. Preventing cylinder tube sag
   When mounting horizontally, tubing sag must be prevented.
   Installing a non-sag block for reinforcement of tie rod is recommended to minimize the sag.

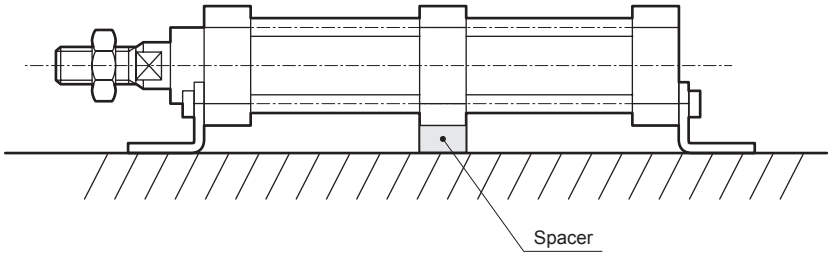

* The following spacers are available made to order.

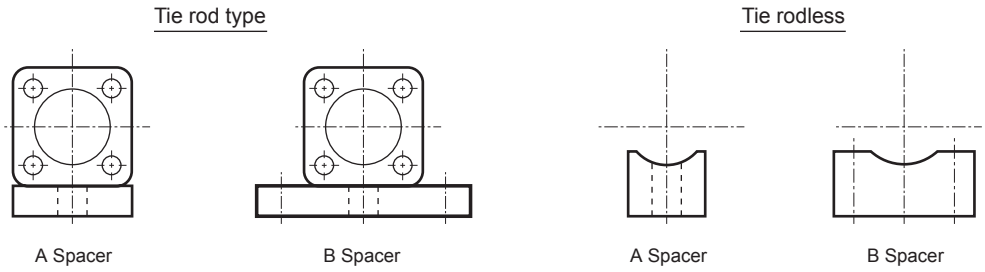

How to determine cylinder mounting

The cylinder piston moves only in one direction. Select cylinder mounting according to the load movement direction shown below.

Load movement direction	Mounting	Caution
The load moves linearly during operation.	Foot Flange	Fix the cylinder body so that load and piston movement directions are parallel.
	Trunnion Clevis type	Use the mounting on the left if the stroke is long, or if the load and piston movement directions are not parallel and in the same direction. Check that lateral load is not applied to the piston rod or bushing.
During operation, the load oscillates within a flat area.	Trunnion Clevis type	Check that the oscillation direction of the clevis or trunnion supporting the cylinder is the same as the load oscillation direction. Also set the oscillation direction of the rod end bracket to the same direction. If a lateral load is applied to the bushing, keep the lateral load to within 1/20 of cylinder output.
During operation, the load oscillates in various directions.	Trunnion Clevis type	Use a knuckle to connect the rod and load. If a lateral load is applied to the bushing, keep the lateral load to within 1/20 of cylinder output.

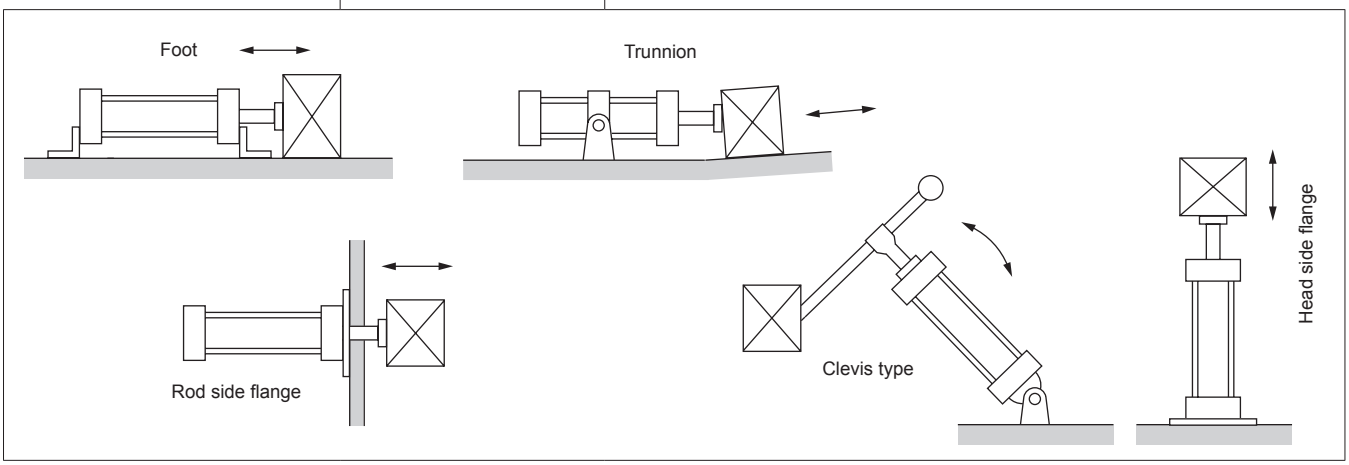

Bellows max. operating ambient temperature

Code	Bellows material	Max. ambient temperature	Instantaneous max. temperature
J	Nylon tarpaulin	60°C	100°C
	Polyolefin elastomer	100°C	200°C
K	Neoprene sheet	100°C	200°C
L	Silicone rubber glass cloth	250°C	400°C

The instantaneous max. temperature is the temperature when sparks and cutting chips, etc., instantaneously contact the bellows.

Air compressor and air tank selection

When selecting a compressor and a tank, consider 10 to 20% leakage loss from actual air consumption due to pipe or switching valves.

Generally, piston displacement listed in compressor manufacturer catalog is the theoretical value. Considering volumetric efficiency, 70% of the theoretical value is the effective value. Therefore, select a compressor whose piston displacement is double the air consumption.

Selecting air compressor for intermittent operation (actuation)

For intermittent operation, if an air tank is installed, even a small air compressor can manage large work projects.

Even if air consumption is high while the cylinder, etc., is operating, causing pressure to drop, install an air tank with a capacity to keep it from dropping to max. working pressure and install a compressor that replaces compressed air before the cylinder operates again.

Capacity of air tank

$$Vt=\frac{Vs}{(Pt-Ps)\times 10.2}$$

Vt : Tank capacity (ℓ)
Vs : Air consumption per cycle (ℓ) (ANR)
Pt : Tank pressure (MPa)
Ps : Max. working pressure

Certification of second class pressure vessel

According to regulations of the Ministry of Health, Labour and Welfare, the following cylinders should be certified by the Japan Boilers Association.

(1) Cylinders with a rated pressure exceeding 0.2 MPa and cylinder capacity exceeding 0.04 m^3.

(2) Cylinders with a rated pressure exceeding 0.2 MPa, tube bore size exceeding 200 mm and length exceeding 1000 mm.

$$V=\frac{D^2\times S\times 3.14}{4\times 10^9}$$

V : Cylinder capacity (m^3)
D : Bore size (mm)
S : Body length (cylinder tube length) (mm)

Japan Boiler Association homepage address
http://www.jbanet.or.jp/

[Technical reference data] Commonly used dimension tolerance

Excerpt from JIS B 0401:1998

Shaft tolerance

Basic dimensions (mm)		Shaft intersection range unit: μm									
Over	or less	d9	e8	e11	f7	f8	h6	h7	h8	h9	p6
-	3	-20 -45	-14 -28	-14 -74	-6 -16	-6 -20	0 -6	0 -10	0 -14	0 -25	+12 +6
3	6	-30 -60	-20 -38	-20 -95	-10 -22	-10 -28	0 -8	0 -12	0 -18	0 -30	+20 +12
6	10	-40 -76	-25 -47	-25 -115	-13 -28	-13 -35	0 -9	0 -15	0 -22	0 -36	+24 +15
10	14	-50 -93	-32 -59	-32 -142	-16 -34	-16 -43	0 -11	0 -18	0 -27	0 -43	+29 +18
14	18										
18	24	-65 -117	-40 -73	-40 -170	-20 -41	-20 -53	0 -13	0 -21	0 -33	0 -52	+35 +22
24	30										
30	40	-80 -142	-50 -89	-50 -210	-25 -50	-25 -64	0 -16	0 -25	0 -39	0 -62	+42 +26
40	50										
50	65	-100 -174	-60 -106	-60 -250	-30 -60	-30 -76	0 -19	0 -30	0 -46	0 -74	+51 +32
65	80										
80	100	-120 -207	-72 -126	-72 -292	-36 -71	-36 -90	0 -22	0 -35	0 -54	0 -87	+59 +37

Bore tolerance

Basic dimensions (mm)		Shaft intersection range unit: μm					
Over	or less	F7	H6	H7	H8	H9	H10
-	3	+16 +6	+6 0	+10 0	+14 0	+25 0	+40 0
3	6	+22 +10	+8 0	+12 0	+18 0	+30 0	+48 0
6	10	+28 +13	+9 0	+15 0	+22 0	+36 0	+58 0
10	14	+34 +16	+11 0	+18 0	+27 0	+43 0	+70 0
14	18						
18	24	+41 +20	+13 0	+21 0	+33 0	+52 0	+84 0
24	30						
30	40	+50 +25	+16 0	+25 0	+39 0	+62 0	+100 0
40	50						
50	65	+60 +30	+19 0	+30 0	+46 0	+74 0	+120 0
65	80						
80	100	+71 +36	+22 0	+35 0	+54 0	+87 0	+140 0

International System of Units (SI units)

■ Conversion of SI units and conventional units

SI units (International System of Units) are used in this catalog.
Conversion for SI and conventional units are shown below.

■ SI unit conversion table (SI units are indicated with bold line.)

Conversion example (for pressure) 1 kgf/cm^2⇒9.80665 × 10^{-2} MPa 1 MPa ⇒1.01972 × 10 kgf/cm^2

● Force

N	dyn	kgf
1	1×10^{5}	1.01972×10^{-1}
1×10^{-5}	1	1.01972×10^{-6}
9.80665	9.80665×10^{5}	1

● Viscosity

Pa/s	cP	P
1	1×10^{3}	1×10
1×10^{-3}	1	1×10^{-2}
1×10^{-1}	1×10^{2}	1

Note: 1 P=1 dyn/s/cm^2 = 1 g/cm/s,
1 Pa/s = 1 N/s/m^2, 1 cP = 1 mPa/s

● Stress

Pa or N/m^2	MPa or N/mm^2	kgf/mm^2	kgf/cm^2
1	1×10^{-6}	1.01972×10^{-7}	1.01972×10^{-5}
1×10^{6}	1	1.01972×10^{-1}	1.01972×10
9.80665×10^{6}	9.80665	1	1×10^{2}
9.80665×10^{4}	9.80665×10^{-2}	1×10^{-2}	1

Note: 1 Pa = 1 N/m^2, 1 MPa = 1 N/mm^2

● Kinematic viscosity

m^2/s	cSt	St
1	1×10^{6}	1×10^{4}
1×10^{-6}	1	1×10^{-2}
1×10^{-4}	1×10^{2}	1

Note: 1 St = 1 cm^2/s, 1 cSt = 1 mm^2/s

● Pressure

Pa	kPa	MPa	bar	kgf/cm^2	atm	mmH$_2$0 or mmAq	mmHg or Torr
1	1×10^{-3}	1×10^{-6}	1×10^{-5}	1.01972×10^{-5}	9.86923×10^{-6}	1.01972×10^{-1}	7.50062×10^{-3}
1×10^{3}	1	1×10^{-3}	1×10^{-2}	1.01972×10^{-2}	9.86923×10^{-3}	1.01972×10^{2}	7.50062
1×10^{6}	1×10^{3}	1	1×10	1.01972×10	9.86923	1.01972×10^{5}	7.50062×10^{3}
1×10^{5}	1×10^{2}	1×10^{-1}	1	1.01972	9.86923×10^{-1}	1.01972×10^{4}	7.50062×10^{2}
9.80665×10^{4}	9.80665×10	9.80665×10^{-2}	9.80665×10^{-1}	1	9.67841×10^{-1}	1×10^{4}	7.35559×10^{2}
1.01325×10^{5}	1.01325×10^{2}	1.01325×10^{-1}	1.01325	1.03323	1	1.03323×10^{4}	7.60000×10^{2}
9.80665	9.80665×10^{-3}	9.80665×10^{-6}	9.80665×10^{-5}	1×10^{-4}	9.67841×10^{-5}	1	7.35559×10^{-2}
1.33322×10^{2}	1.33322×10^{-1}	1.33322×10^{-4}	1.33322×10^{-3}	1.35951×10^{-3}	1.31579×10^{-3}	1.35951×10	1

Note: 1 Pa = 1 N/m^2

Ending

● Work/energy/quantity of heat

J	kW/h	kgf/m	kcal
1	2.77778×10^{-7}	1.01972×10^{-1}	2.38889×10^{-4}
3.600×10^{6}	1	3.67098×10^{5}	8.6000×10^{2}
9.80665	2.72407×10^{-6}	1	2.34270×10^{-3}
4.18605×10^{3}	1.16279×10^{-3}	4.26858×10^{2}	1

Note: 1 J = 1 W/s, 1 J = 1 N/m 1 cal = 4.18605 J (according to the Measurement Act)

● Power (power/motivity) heat flow

W	kgf/m/s	PS	kcal/h
1	1.01972×10^{-1}	1.35962×10^{-3}	8.6000×10^{-1}
9.80665	1	1.33333×10^{-2}	8.43371
7.355×10^{2}	7.5×10	1	6.32529×10^{2}
1.16279	1.18572×10^{-1}	1.58095×10^{-3}	1

Note: 1 W = 1 J/s, PS: French horsepower
1 PS = 0.7355 kW (according to the Act for Enforcement of the Measurement Act)
1 cal = 4.18605 J (according to the Measurement Act)

● Thermal conduction ratio

W/(m/k)	kcal/(h/m/°C)
1	8.6000×10^{-1}
1.16279	1

Note: 1 cal = 4.18605 J (according to the Measurement Act)

● Coefficient of heat transfer

W/(m^2/k)	kcal/(h/m^2/°C)
1	8.6000×10^{-1}
1.16279	1

Note: 1 cal = 4.18605 J (according to the Measurement Act)

● Specific heat

J/(kg/k)	kcal/(kg/°C) cal/(g/°C)
1	2.38889×10^{-4}
4.18605×10^{3}	1

Note: 1 cal = 4.18605 J (according to the Measurement Act)

Rod eye/clevis dimension list

	Page
Rod eye dimension list (by series)	Ending 76
Rod eye dimension list (by thread size)	Ending 78
Rod clevis dimension list (by series)	Ending 80
Rod clevis dimension list (by thread size)	Ending 82

Rod eye/clevis dimension list

Rod eye (by series)

Shape code: A

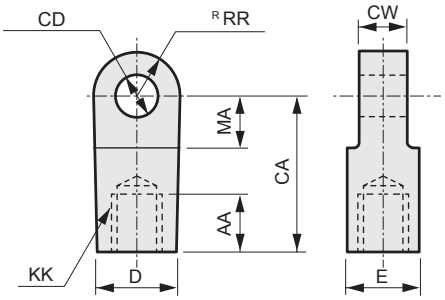

Shape code: B

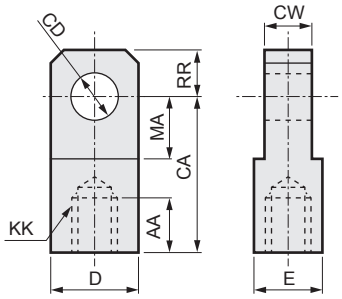

Model	Shape code	Model No.	Applicable bore size (ø)	AA	CA	CD	CW	D	E	KK	MA	RR
CMK2	B	M1-I-20	20	14	30	10 H10	8 -0.1 -0.2	19	19	M8×1.0	13	10
		M1-I-30	25, 32	14	36	12 H10	10 -0.1 -0.2	25	19	M10×1.25	16	12
		M1-I-40	40	14	36	12 H10	10 -0.1 -0.2	25	19	M12×1.5	16	12
CMA2	B	M1-I-20	20	14	30	10 H10	8 -0.1 -0.2	19	19	M8×1.0	13	10
		M1-I-30	30	14	36	12 H10	10 -0.1 -0.2	25	19	M10×1.25	16	12
		M1-I-40	40	14	36	12 H10	10 -0.1 -0.2	25	19	M12×1.5	16	12
CKV2	B	M1-I-20	20	14	30	10 H10	8 -0.1 -0.2	19	19	M8×1.0	13	10
		M1-I-30	25, 32	14	36	12 H10	10 -0.1 -0.2	25	19	M10×1.25	16	12
		M1-I-40	40	14	36	12 H10	10 -0.1 -0.2	25	19	M12×1.5	16	12
CAV2 COV2	A	CAV2-50-I	50	25	50	14 H10	20 0 -0.3	26	26	M16×1.5	20	15
		CAV2-75-I	75, 100	30	65	20 H10	28 0 -0.3	38	35	M22×1.5	28	22.5
HCA	B	M1-I-20	20	14	30	10 H10	8 -0.1 -0.2	19	19	M8×1.0	13	10
		M1-I-30	25, 32	14	36	12 H10	10 -0.1 -0.2	25	19	M10×1.25	16	12
	A	S1-I-40	40	20	50	12 H10	18 -0.1 -0.4	(27)	27	M14×1.5	21	16
		S1-I-50	50	21	50	12 H10	18 -0.1 -0.4	(27)	27	M18×1.5	21	16
		S1-I-63	63	21	50	14 H10	20 -0.1 -0.4	(27)	27	M18×1.5	21	16
		S1-I-80	80	30	70	20 H10	28 -0.1 -0.4	(46)	41	M22×1.5	30	25
		S1-I-100	100	30	70	20 H10	28 -0.1 -0.4	(46)	41	M26×1.5	30	25
JSG	B	SCG-I-40	40	19	40	10 H10	14 -0.1 -0.3	ø22	ø22	M14×1.5	19	10
		SCG-I-50	50, 63	24	50	14 H10	20 -0.1 -0.3	ø28	ø28	M18×1.5	24	14
		SCG-I-80	80	26	60	22 H10	30 -0.1 -0.3	ø40	ø40	M22×1.5	34	20
		SCG-I-100	100	26	60	22 H10	30 -0.1 -0.3	ø40	ø40	M26×1.5	34	20
JSM2	B	M1-I-20	20	14	30	10 H10	8 -0.1 -0.2	19	19	M8×1.0	13	10
		M1-I-30	30	14	36	12 H10	10 -0.1 -0.2	25	19	M10×1.25	16	12
		M1-I-40	40	14	36	12 H10	10 -0.1 -0.2	25	19	M12×1.5	16	12
JSK2	B	M1-I-20	20	14	30	10 H10	8 -0.1 -0.2	19	19	M8×1.0	13	10
		M1-I-30	25, 32	14	36	12 H10	10 -0.1 -0.2	25	19	M10×1.25	16	12
		M1-I-40	40	14	36	12 H10	10 -0.1 -0.2	25	19	M12×1.5	16	12
JSC3	A	S1-I-40	40	20	50	12 H10	18 -0.1 -0.4	(27)	27	M14×1.5	21	16
		S1-I-50	50	21	50	12 H10	18 -0.1 -0.4	(27)	27	M18×1.5	21	16
		S1-I-63	63	21	50	14 H10	20 -0.1 -0.4	(27)	27	M18×1.5	21	16
		S1-I-80	80	30	70	20 H10	28 -0.1 -0.4	(46)	41	M22×1.5	30	25
		S1-I-100	100	30	70	20 H10	28 -0.1 -0.4	(46)	41	M26×1.5	30	25
JSC4	B	SCS2-125-I	125	50	85	25 H10	32 -0.1 -0.4	ø55	ø55	M30×1.5	32	27.5
		SCS2-140-I	140	50	90	28 H10	36 -0.1 -0.4	ø60	ø60	M30×1.5	35	30
		SCS2-160-I	160	60	105	32 H10	40 -0.1 -0.4	ø70	ø70	M36×1.5	40	35
		SCS2-180-I	180	65	115	40 H10	50 -0.1 -0.4	ø85	ø85	M40×1.5	47.5	42.5
SCP*3	B	P2-I-10	10	8	21	3.2 H10	3.1 0 -0.1	12	12	M4	9	7
		P2-I-16	16	8	25	5 H10	6.4 0 -0.1	12	12	M5	14	7

Note: The A and B figures are a guide only. For details, refer to the accessory and external dimensions of each model.

Rod eye (by series)

Model	Shape code	Model No.	Applicable bore size (ø)	AA	CA	CD	CW	D	E	KK	MA	RR
SCA2	A	S1-I-40	40	20	50	12 H10	18 -0.1 -0.4	(27)	27	M14×1.5	21	16
		S1-I-50	50	21	50	12 H10	18 -0.1 -0.4	(27)	27	M18×1.5	21	16
		S1-I-63	63	21	50	14 H10	20 -0.1 -0.4	(27)	27	M18×1.5	21	16
		S1-I-80	80	30	70	20 H10	28 -0.1 -0.4	(46)	41	M22×1.5	30	25
		S1-I-100	100	30	70	20 H10	28 -0.1 -0.4	(46)	41	M26×1.5	30	25
SCG	B	SCG-I-32	32	14	30	10 H10	14 -0.1 -0.3	ø20	ø20	M10×1.25	16	10
		SCG-I-40	40	19	40	10 H10	14 -0.1 -0.3	ø22	ø22	M14×1.5	19	10
		SCG-I-50	50, 63	24	50	14 H10	20 -0.1 -0.3	ø28	ø28	M18×1.5	24	14
		SCG-I-80	80	26	60	22 H10	30 -0.1 -0.3	ø40	ø40	M22×1.5	34	20
		SCG-I-100	100	26	60	22 H10	30 -0.1 -0.3	ø40	ø40	M26×1.5	34	20
SCS2	B	SCS2-125-I	125	50	85	25 H10	32 -0.1 -0.4	ø55	ø55	M30×1.5	32	27.5
		SCS2-140-I	140	50	90	28 H10	36 -0.1 -0.4	ø60	ø60	M30×1.5	35	30
		SCS2-160-I	160	60	105	32 H10	40 -0.1 -0.4	ø70	ø70	M36×1.5	40	35
		SCS2-180-I	180	65	115	40 H10	50 -0.1 -0.4	ø85	ø85	M40×1.5	47.5	42.5
		SCS2-200-I	200	75	125	40 H10	50 -0.1 -0.4	ø85	ø85	M45×1.5	47.5	42.5
		SCS2-250-I	250	88	150	50 H10	63 -0.1 -0.4	ø105	ø105	M56×2	57.5	52.5
SCM	B	SCM-I-20	20	8.5	25	8 H10	8 -0.2 -0.4	16	16	M8	11.5	9
		SCM-I-25	25, 32	10.5	30	10 H10	10 -0.2 -0.4	20	20	M10×1.25	14	11
	A	SCM-I-40	40	14	30	10 H10	18 -0.3 -0.5	22	22	M14×1.5	14	12
		SCM-I-50	50, 63	18	40	14 H10	22 -0.3 -0.5	28	28	M18×1.5	20	16
		SCM-I-80	80	21	50	18 H10	28 -0.3 -0.5	38	38	M22×1.5	27	21
		SCM-I-100	100	21	55	22 H10	32 -0.3 -0.5	44	44	M26×1.5	31	24
SSD2	B	SSD2-I-12	12	6	16	5 H10	5 -0.2 -0.4	10	10	M5×0.8	7	5.5
		SSD2-I-16	16	8	25	5 H10	6.5 -0.2 -0.4	12	12	M6×1	14	7
		SSD2-I-20	20	8.5	25	8 H10	8 -0.2 -0.4	16	16	M8×1.25	11.5	9
		SSD2-I-25	25	10.5	30	10 H10	10 -0.2 -0.4	20	20	M10×1.25	14	11
	A	SSD2-I-32	32, 40	14	30	10 H10	18 -0.3 -0.5	ø22	ø22	M14×1.5	14	12
		SSD2-I-50	50, 63	18	40	14 H10	22 -0.3 -0.5	ø28	ø28	M18×1.5	20	16
		SSD2-I-80	80	21	50	18 H10	28 -0.3 -0.5	ø38	ø38	M22×1.5	27	21
		SSD2-I-100	100	21	55	22 H10	32 -0.3 -0.5	ø44	ø44	M26×1.5	31	24
SSD	B	P2-I-16	12	8	25	5 H10	6.4 -0 -0.1	12	12	M5	14	10
	A	SSD-I-16	16	8	25	5 H10	6.5 -0.1 -0.2	12	12	M6	14	10
	B	SSD-I-20	20	13.5	30	10 H10	8 -0.1 -0.2	19	19	M8	13	10
		M1-I-30	25	14	36	12 H10	10 -0.1 -0.2	25	19	M10×1.25	16	12
		SSD-I-32	32	15	36	12 H10	10 -0.1 -0.2	25	19	M14	16	12
	A	SSD-I-40	40	20	50	12 H10	18 -0.1 -0.4	27	27	M14×1.5	21	16
		SSD-I-50	50	21	50	12 H10	18 -0.1 -0.4	27	27	M18×1.5	21	16
		SSD-I-63	63	21	50	14 H10	20 -0.1 -0.4	(27)	27	M18×1.5	21	16
		SSD-I-80	80	30	70	20 H10	28 -0.1 -0.4	46	41	M22×1.5	30	25
		SSD-I-100	100	30	70	20 H10	28 -0.1 -0.4	46	41	M26×1.5	30	25
	B	SCS-125-I	125, 140	50	85	25 H10	32 -0.1 -0.4	55	55	M30×1.5	32	27.5
		SCS-160-I	160	60	105	32 H10	40 -0.1 -0.4	70	70	M36×1.5	40	35
ULK	B	M1-I-20	20	14	30	10 H10	8 -0.1 -0.2	19	19	M8×1.0	13	10
		M1-I-30	25, 32	14	36	12 H10	10 -0.1 -0.2	25	19	M10×1.25	16	12
		M1-I-40	40	14	36	12 H10	10 -0.1 -0.2	25	19	M12×1.5	16	12

Rod eye/clevis dimension list

Rod eye (by thread size)

Shape code: A

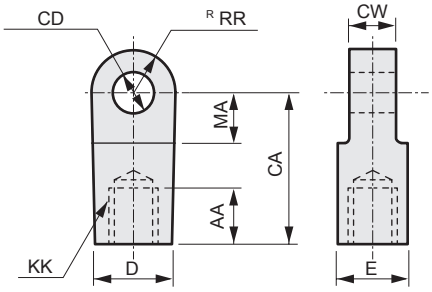

Shape code: B

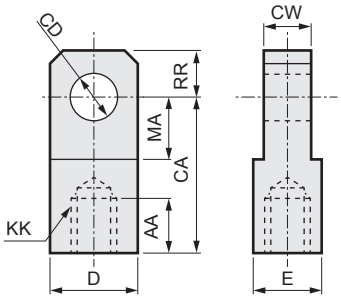

Thread size KK	Model No.	Shape code	Compatible model	Applicable bore size (ø)	AA	CA	CD	CW	D	E	MA	RR
M4	P2-I-10	B	SCP*3	10	8	21	3.2 ^{H10}	3.1 $^{0}_{-0.1}$	12	12	9	7
M5	P2-I-16	B	SCP*3	16	8	25	5 ^{H10}	6.4 $^{0}_{-0.1}$	12	12	14	7
			SSD	12								
	SSD2-I-12	B	SSD2	12	6	16	5 ^{H10}	5 $^{-0.2}_{-0.4}$	10	10	7	5.5
M6	SSD-I-16	A	SSD	16	8	25	5 ^{H10}	6.5 $^{-0.1}_{-0.2}$	12	12	14	10
	SSD2-I-16	B	SSD2	16	8	25	5 ^{H10}	6.5 $^{-0.2}_{-0.4}$	12	12	14	7
M8×1.0	M1-I-20	B	CKV2, CMA2, CMK2 HCA, JSK2, JSM2 ULK	20	14	30	10 ^{H10}	8 $^{-0.1}_{-0.2}$	19	19	13	10
M8	SCM-I-20	B	SCM	20	8.5	25	8 ^{H10}	8 $^{-0.2}_{-0.4}$	16	16	11.5	9
	SSD-I-20	B	SSD	20	13.5	30	10 ^{H10}	8 $^{-0.1}_{-0.2}$	19	19	13	10
	SSD2-I-20	B	SSD2	20	8.5	25	8 ^{H10}	8 $^{-0.2}_{-0.4}$	16	16	11.5	9
M10×1.25	SCG-I-32	B	SCG	32	14	30	10 ^{H10}	14 $^{-0.1}_{-0.3}$	ø20	ø20	16	10
	M1-I-30	B	CMA2, CMK2, HCA JSK2, JSM2, ULK, SSD	25, 30, 32	14	36	12 ^{H10}	10 $^{-0.1}_{-0.2}$	25	19	16	12
	SCM-I-25	B	SCM	25, 32	10.5	30	10 ^{H10}	10 $^{-0.2}_{-0.4}$	20	20	14	11
	SSD2-I-25	B	SSD2	25	10.5	30	10 ^{H10}	10 $^{-0.2}_{-0.4}$	20	20	14	11
M12×1.5	M1-I-40	B	CKV2, CMA2, CMK2 JSK2, JSM2, ULK	40	14	36	12 ^{H10}	10 $^{-0.1}_{-0.2}$	25	19	16	12
M14×1.5	SCG-I-40	B	SCG, JSG	40	19	40	10 ^{H10}	14 $^{-0.1}_{-0.3}$	ø22	ø22	19	10
	SSD2-I-32	A	SSD2	32, 40	14	30	10 ^{H10}	18 $^{-0.3}_{-0.5}$	ø22	ø22	14	12
	S1-I-40	A	HCA, JSC3 SCA2, SSD	40	20	50	12 ^{H10}	18 $^{-0.1}_{-0.4}$	(27)	27	21	16
	SCM-I-40	A	SCM	40	14	30	10 ^{H10}	18 $^{-0.3}_{-0.5}$	22	22	14	12
M14	SSD-I-32	B	SSD	32	15	36	12	10 $^{-0.1}_{-0.2}$	25	19	16	12
M16×1.5	CAV2-50-I	A	CAV2, COV2	50	25	50	14 ^{H10}	20 $^{0}_{-0.3}$	26	26	20	15
M18×1.5	SCG-I-50	B	SCG, JSG	50, 63	24	50	14 ^{H10}	20 $^{-0.1}_{-0.3}$	ø28	ø28	24	14
	SSD2-I-50	A	SSD2	50, 63	18	40	14 ^{H10}	22 $^{-0.3}_{-0.5}$	ø28	ø28	20	16
	S1-I-50	A	HCA, JSC3, SCA2	50	21	50	12 ^{H10}	18 $^{-0.1}_{-0.4}$	(27)	27	21	16
	SSD-I-50		SSD									
	S1-I-63	A	HCA, JSC3, SCA2	63	21	50	14 ^{H10}	20 $^{-0.1}_{-0.4}$	(27)	27	21	16
	SSD-I-63		SSD									
	SCM-I-50	A	SCM	50, 63	18	40	14 ^{H10}	22 $^{-0.3}_{-0.5}$	28	28	20	16
M22×1.5	SCG-I-80	B	SCG, JSG	80	26	60	22 ^{H10}	30 $^{-0.1}_{-0.3}$	ø40	ø40	34	20
	CAV2-75-I	A	CAV2, COV2	75, 100	30	65	20 ^{H10}	28 $^{0}_{-0.3}$	38	35	28	22.5
	S1-I-80	A	HCA, JSC3, SCA2	80	30	70	20 ^{H10}	28 $^{-0.1}_{-0.4}$	(46)	41	30	25
	SSD-I-80		SSD									
	SCM-I-80	A	SCM	80	21	50	18 ^{H10}	28 $^{-0.3}_{-0.5}$	38	38	27	21
	SSD2-I-80	A	SSD2	80	21	50	18 ^{H10}	28 $^{-0.3}_{-0.5}$	ø38	ø38	27	21
M26×1.5	SCG-I-100	B	SCG, JSG	100	26	60	22 ^{H10}	30 $^{-0.1}_{-0.3}$	ø40	ø40	34	20
	S1-I-100	A	HCA, JSC3, SCA2	100	30	70	20 ^{H10}	28 $^{-0.1}_{-0.4}$	(46)	41	30	25
	SSD-I-100		SSD									
	SCM-I-100	A	SCM	100	21	55	22 ^{H10}	32 $^{-0.3}_{-0.5}$	44	44	31	24

Note: The A and B figures are a guide only. For details, refer to the accessory and external dimensions of each model.

Rod eye (by thread size)

Thread size KK	Model No.	Shape code	Compatible model	Applicable bore size (ø)	AA	CA	CD	CW	D	E	MA	RR
M26×1.5	SSD2-I-100	A	SSD2	100	21	55	22 ^{H10}	32 $^{-0.3}_{-0.5}$	ø44	ø44	31	24
M30×1.5	SCS2-125-I	B	JSC4, SCS2	125	50	85	25 ^{H10}	32 $^{-0.1}_{-0.4}$	ø55	ø55	32	27.5
			SSD	125, 140								
	SCS2-140-I	B	JSC4, SCS2	140	50	90	28 ^{H10}	36 $^{-0.1}_{-0.4}$	ø60	ø60	35	30
M36×1.5	SCS2-160-I	B	JSC4, SCS2, SSD	160	60	105	32 ^{H10}	40 $^{-0.1}_{-0.4}$	ø70	ø70	40	35
M40×1.5	SCS2-180-I	B	JSC4, SCS2	180	65	115	40 ^{H10}	50 $^{-0.1}_{-0.4}$	ø85	ø85	47.5	42.5
M45×1.5	SCS2-200-I	B	SCS2	200	75	125	40 ^{H10}	50 $^{-0.1}_{-0.4}$	ø85	ø85	47.5	42.5
M56×2	SCS2-250-I	B	SCS2	250	88	150	50 ^{H10}	63 $^{-0.1}_{-0.4}$	ø105	ø105	57.5	52.5

Note: The A and B figures are a guide only. For details, refer to the accessory and external dimensions of each model.

Rod eye/clevis dimension list

Rod clevis (by series)

Shape code: A

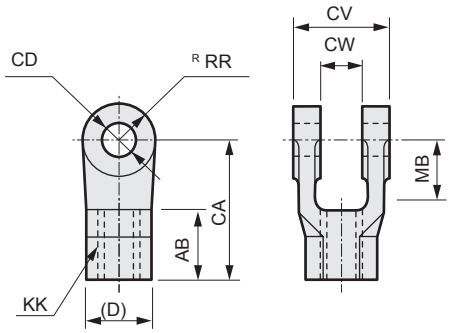

Shape code: B

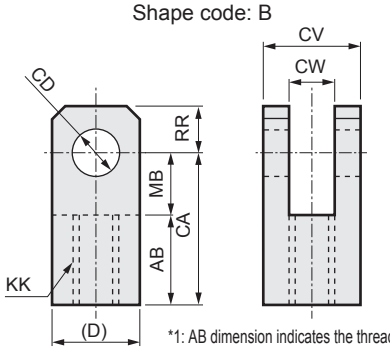

*1: AB dimension indicates the thread depth.
*2: The MB dimension is the effective length of the CW dimension.

Model	Shape code	Model No.	Applicable bore size (ø)	AB	CA	CW	CD	CV	D	KK	MB	RR
CMK2	B	M1-Y-20	20	17	30	8 $^{+0.3}_{+0.1}$	10 ^{H10}	19	19	M8×1.0	13	10
		M1-Y-30	25, 32	20	36	10 $^{+0.3}_{+0.1}$	12 ^{H10}	25	25	M10×1.25	16	12
		M1-Y-40	40	20	36	10 $^{+0.3}_{+0.1}$	12 ^{H10}	25	25	M12×1.5	16	12
CMA2	B	M1-Y-20	20	17	30	8 $^{+0.3}_{+0.1}$	10 ^{H10}	19	19	M8×1.0	13	10
		M1-Y-30	30	20	36	10 $^{+0.3}_{+0.1}$	12 ^{H10}	25	25	M10×1.25	16	12
		M1-Y-40	40	20	36	10 $^{+0.3}_{+0.1}$	12 ^{H10}	25	25	M12×1.5	16	12
CKV2	B	M1-Y-20	20	17	30	8 $^{+0.3}_{+0.1}$	10 ^{H10}	19	19	M8×1.0	13	10
		M1-Y-30	25, 32	20	36	10 $^{+0.3}_{+0.1}$	12 ^{H10}	25	25	M10×1.25	16	12
		M1-Y-40	40	20	36	10 $^{+0.3}_{+0.1}$	12 ^{H10}	25	25	M12×1.5	16	12
CAV2 COV2	A	CAV2-50-Y	50	25	50	20 $^{+0.3}_{0}$	14 ^{H10}	42	(23)	M16×1.5	18	15
		CAV2-75-Y	75, 100	30	65	28 $^{+0.3}_{0}$	20 ^{H10}	60	(35)	M22×1.5	28	22.5
HCA	B	M1-Y-20	20	17	30	8 $^{+0.3}_{+0.1}$	10 ^{H10}	19	19	M8×1.0	13	10
		M1-Y-30	25, 32	20	36	10 $^{+0.3}_{+0.1}$	12 ^{H10}	25	25	M10×1.25	16	12
	A	S1-Y-40	40	24	50	18 $^{+0.4}_{+0.1}$	12 ^{H10}	36	(27)	M14×1.5	19	16
		S1-Y-50	50	24	50	18 $^{+0.4}_{+0.1}$	12 ^{H10}	36	(27)	M18×1.5	19	16
		S1-Y-63	63	24	50	20 $^{+0.4}_{+0.1}$	14 ^{H10}	40	(27)	M18×1.5	19	16
		S1-Y-80	80	35	70	28 $^{+0.4}_{+0.1}$	20 ^{H10}	56	(41)	M22×1.5	30	25
		S1-Y-100	100	35	70	28 $^{+0.4}_{+0.1}$	20 ^{H10}	56	(41)	M26×1.5	30	25
JSG	A	SCG-Y-40	40	21	40	14 $^{+0.3}_{+0.1}$	10 ^{H10}	28	(22)	M14×1.5	19	11
		SCG-Y-50	50, 63	26	50	20 $^{+0.3}_{+0.1}$	14 ^{H10}	40	(28)	M18×1.5	24	14
		SCG-Y-80	80	31	65	30 $^{+0.3}_{+0.1}$	22 ^{H10}	60	(40)	M22×1.5	34	20
		SCG-Y-100	100	31	65	30 $^{+0.3}_{+0.1}$	22 ^{H10}	60	(40)	M26×1.5	34	20
JSM2	B	M1-Y-20	20	17	30	8 $^{+0.3}_{+0.1}$	10 ^{H10}	19	19	M8×1.0	13	10
		M1-Y-30	30	20	36	10 $^{+0.3}_{+0.1}$	12 ^{H10}	25	25	M10×1.25	16	12
		M1-Y-40	40	20	36	10 $^{+0.3}_{+0.1}$	12 ^{H10}	25	25	M12×1.5	16	12
JSK2	B	M1-Y-20	20	17	30	8 $^{+0.3}_{+0.1}$	10 ^{H10}	19	19	M8×1.0	13	10
		M1-Y-30	25, 32	20	36	10 $^{+0.3}_{+0.1}$	12 ^{H10}	25	25	M10×1.25	16	12
		M1-Y-40	40	20	36	10 $^{+0.3}_{+0.1}$	12 ^{H10}	25	25	M12×1.5	16	12
JSC3	A	S1-Y-40	40	24	50	18 $^{+0.4}_{+0.1}$	12 ^{H10}	36	(27)	M14×1.5	19	16
		S1-Y-50	50	24	50	18 $^{+0.4}_{+0.1}$	12 ^{H10}	36	(27)	M18×1.5	19	16
		S1-Y-63	63	24	50	20 $^{+0.4}_{+0.1}$	14 ^{H10}	40	(27)	M18×1.5	19	16
		S1-Y-80	80	35	70	28 $^{+0.4}_{+0.1}$	20 ^{H10}	56	(41)	M22×1.5	30	25
		S1-Y-100	100	35	70	28 $^{+0.4}_{+0.1}$	20 ^{H10}	56	(41)	M26×1.5	30	25
JSC4	A	SCS2-125-Y	125	50	85	32 $^{+0.4}_{+0.1}$	25 ^{H10}	64	(46)	M30×1.5	35	27.5
		SCS2-140-Y	140	50	90	36 $^{+0.4}_{+0.1}$	28 ^{H10}	72	(46)	M30×1.5	40	30
		SCS2-160-Y	160	60	105	40 $^{+0.4}_{+0.1}$	32 ^{H10}	80	(55)	M36×1.5	45	35
		SCS2-180-Y	180	65	115	50 $^{+0.4}_{+0.1}$	40 ^{H10}	100	(60)	M40×1.5	50	42.5
SCP*3	B	P2-Y-10	10	8	21	3.2 $^{+0.2}_{+0.1}$	3.2 ^{H10}	12	12	M4	10	7
		P2-Y-16	16	11	21	6.5 $^{+0.2}_{+0.1}$	5 ^{H10}	12	12	M5	10	7

Note: The A and B figures are a guide only. For details, refer to the accessory and external dimensions of each model.

Rod clevis (by series)

Model	Shape code	Model No.	Applicable bore size (ø)	AB	CA	CW	CD	CV	D	KK	MB	RR
SCG	A	SCG-Y-32	32	14	30	14 $^{+0.3}_{+0.1}$	10 H10	28	(20)	M10×1.25	16	10
		SCG-Y-40	40	21	40	14 $^{+0.3}_{+0.1}$	10 H10	28	(22)	M14×1.5	19	11
		SCG-Y-50	50, 63	26	50	20 $^{+0.3}_{+0.1}$	14 H10	40	(28)	M18×1.5	24	14
		SCG-Y-80	80	31	65	30 $^{+0.3}_{+0.1}$	22 H10	60	(40)	M22×1.5	34	20
		SCG-Y-100	100	31	65	30 $^{+0.3}_{+0.1}$	22 H10	60	(40)	M26×1.5	34	20
SCA2	A	S1-Y-40	40	24	50	18 $^{+0.4}_{+0.1}$	12 H10	36	(27)	M14×1.5	19	16
		S1-Y-50	50	24	50	18 $^{+0.4}_{+0.1}$	12 H10	36	(27)	M18×1.5	19	16
		S1-Y-63	63	24	50	20 $^{+0.4}_{+0.1}$	14 H10	40	(27)	M18×1.5	19	16
		S1-Y-80	80	35	70	28 $^{+0.4}_{+0.1}$	20 H10	56	(41)	M22×1.5	30	25
		S1-Y-100	100	35	70	28 $^{+0.4}_{+0.1}$	20 H10	56	(41)	M26×1.5	30	25
SCS2	A	SCS2-125-Y	125	50	85	32 $^{+0.4}_{+0.1}$	25 H10	64	(46)	M30×1.5	35	27.5
		SCS2-140-Y	140	50	90	36 $^{+0.4}_{+0.1}$	28 H10	72	(46)	M30×1.5	40	30
		SCS2-160-Y	160	60	105	40 $^{+0.4}_{+0.1}$	32 H10	80	(55)	M36×1.5	45	35
		SCS2-180-Y	180	65	115	50 $^{+0.4}_{+0.1}$	40 H10	100	(60)	M40×1.5	50	42.5
		SCS2-200-Y	200	75	125	50 $^{+0.4}_{+0.1}$	40 H10	100	(70)	M45×1.5	50	42.5
		SCS2-250-Y	250	88	150	63 $^{+0.4}_{+0.1}$	50 H10	126	(85)	M56×2	62	52.5
SCM	B	SCM-Y-20	20	13.5	25	8 $^{+0.4}_{+0.2}$	8 H10	16	16	M8	11.5	9
		SCM-Y-25	25, 32	16	30	10 $^{+0.4}_{+0.2}$	10 H10	20	20	M10×1.25	14	11
	A	SCM-Y-40	40	16	30	18 $^{+0.5}_{+0.3}$	10 H10	36	22	M14×1.5	14	12
		SCM-Y-50	50, 63	20	40	22 $^{+0.5}_{+0.3}$	14 H10	44	28	M18×1.5	20	16
		SCM-Y-80	80	23	50	28 $^{+0.5}_{+0.3}$	18 H10	56	38	M22×1.5	27	21
		SCM-Y-100	100	24	55	32 $^{+0.5}_{+0.3}$	22 H10	64	44	M26×1.5	31	24
SSD	B	P2-Y-16	12	11	21	6.5 $^{+0.2}_{+0.1}$	5 H10	12	12	M5	10	7
	A	SSD-Y-16	16	11	21	6.5 $^{+0.2}_{+0.1}$	5 H10	12	12	M6	10	10
	B	SSD-Y-20	20	17	30	8 $^{+0.3}_{+0.1}$	10 H10	19	19	M8	13	10
		M1-Y-30	25	20	36	10 $^{+0.3}_{+0.1}$	12 H10	25	25	M10×1.25	16	12
		SSD-Y-32	32	15	36	10 $^{+0.3}_{+0.1}$	12 H10	25	25	M14	16	12
	A	SSD-Y-40	40	24	50	18 $^{+0.4}_{+0.1}$	12 H10	36	(27)	M14×1.5	19	16
		SSD-Y-50	50	24	50	18 $^{+0.4}_{+0.1}$	12 H10	36	(27)	M18×1.5	19	16
		SSD-Y-63	63	24	50	20 $^{+0.4}_{+0.1}$	14 H10	40	(27)	M18×1.5	19	16
		SSD-Y-80	80	35	70	28 $^{+0.4}_{+0.1}$	20 H10	56	(41)	M22×1.5	30	25
		SSD-Y-100	100	35	70	28 $^{+0.4}_{+0.1}$	20 H10	56	(41)	M26×1.5	30	25
	B	SCS2-125-Y	125, 140	50	85	32 $^{+0.4}_{+0.1}$	25 H10	64	(46)	M30×1.5	35	27.5
		SCS2-160-Y	160	60	105	40 $^{+0.4}_{+0.1}$	32 H10	80	(55)	M36×1.5	45	35
SSD2	B	SSD2-Y-12	12	6	16	5 $^{+0.4}_{+0.2}$	5 H10	10	10	M5×0.8	7	5.5
		SSD2-Y-16	16	11	21	6.5 $^{+0.4}_{+0.2}$	5 H10	12	12	M6×1	10	7
		SSD2-Y-20	20	13.5	25	8 $^{+0.4}_{+0.2}$	8 H10	16	16	M8×1.25	11.5	9
		SSD2-Y-25	25	16	30	10 $^{+0.4}_{+0.2}$	10 H10	20	20	M10×1.25	14	11
	A	SSD2-Y-32	32, 40	16	30	18 $^{+0.5}_{+0.3}$	10 H10	36	ø22	M14×1.5	14	12
		SSD2-Y-50	50, 63	20	40	22 $^{+0.5}_{+0.3}$	14 H10	44	ø28	M18×1.5	20	16
		SSD2-Y-80	80	23	50	28 $^{+0.5}_{+0.3}$	18 H10	56	ø38	M22×1.5	27	21
		SSD2-Y-100	100	24	55	32 $^{+0.5}_{+0.3}$	22 H10	64	ø44	M26×1.5	31	24
ULK	B	M1-Y-20	20	17	30	8 $^{+0.3}_{+0.1}$	10 H10	19	19	M8×1.0	13	10
		M1-Y-30	25, 32	20	36	10 $^{+0.3}_{+0.1}$	12 H10	25	25	M10×1.25	16	12
		M1-Y-40	40	20	36	10 $^{+0.3}_{+0.1}$	12 H10	25	25	M12×1.5	16	12

Rod eye/clevis dimension list

Rod clevis (by thread size)

Shape code: A

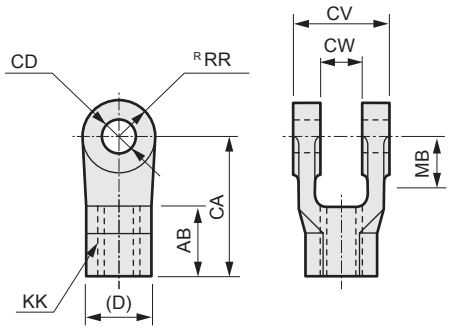

Shape code: B

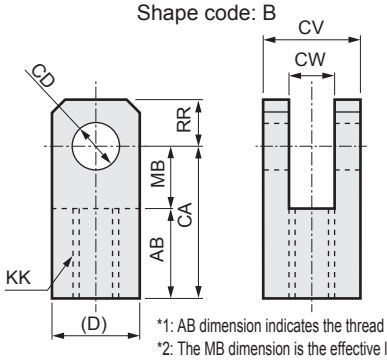

*1: AB dimension indicates the thread depth.
*2: The MB dimension is the effective length of the CW dimension.

Thread size KK	Model No.	Shape code	Compatible model	Applicable bore size (ø)	AB	CA	CW	CD	CV	D	MB	RR
M4	P2-Y-10	B	SCP*3	10	8	21	$3.2^{+0.2}_{0}$	3.2^{H10}	12	12	10	7
M5	P2-Y-16	B	SCP*3	16	11	21	$6.5^{+0.2}_{0}$	5^{H10}	12	12	10	7
			SSD	12								
	SSD2-Y-12	B	SSD2	12	6	16	$5^{+0.4}_{+0.2}$	5^{H10}	10	10	7	5.5
M6	SSD-Y-16	A	SSD	16	11	21	$6.5^{+0.2}_{+0.1}$	5	12	12	10	10
	SSD2-Y-16	B	SSD2	16	11	21	$6.5^{+0.4}_{+0.2}$	5^{H10}	12	12	10	7
M8×1.0	M1-Y-20	B	CKV2, CMA2, CMK2 HCA, JSK2, JSM2 ULK	20	17	30	$8^{+0.3}_{+0.1}$	10^{H10}	19	19	13	10
M8	SCM-Y-20	B	SCM	20	13.5	25	$8^{+0.4}_{+0.2}$	8^{H10}	16	16	11.5	9
	SSD-Y-20	B	SSD	20	17	30	$8^{+0.3}_{+0.1}$	10	19	19	13	10
M8×1.25	SSD2-Y-20	B	SSD2	20	13.5	25	$8^{+0.4}_{+0.2}$	8^{H10}	16	16	11.5	9
M10×1.25	SCG-Y-32	A	SCG	32	14	30	$14^{+0.3}_{+0.1}$	10^{H10}	28	(20)	16	10
	M1-Y-30	B	CKV2, CMA2, CMK2 HCA, JSK2, JSM2 ULK, SSD	25, 30, 32	20	36	$10^{+0.3}_{+0.1}$	12^{H10}	25	25	16	12
	SCM-Y-25	B	SCM	25, 32	16	30	$10^{+0.4}_{+0.2}$	10^{H10}	20	20	14	11
	SSD2-Y-25	B	SSD2	25	16	30	$10^{+0.4}_{+0.2}$	10^{H10}	20	20	14	11
M12×1.5	M1-Y-40	B	CKV2, CMA2, CMK2 JSK2, JSM2, ULK	40	20	36	$10^{+0.3}_{+0.1}$	12^{H10}	25	25	16	12
M14×1.5	SCG-Y-40	A	SCG, JSG	40	21	40	$14^{+0.3}_{+0.1}$	10^{H10}	28	(22)	19	11
	S1-Y-40	A	HCA, JSC3 SCA2, SSD	40	24	50	$18^{+0.4}_{+0.1}$	12^{H10}	36	(27)	19	16
	SCM-Y-40	A	SCM	40	16	30	$18^{+0.5}_{+0.3}$	10^{H10}	36	22	14	12
M14	SSD-Y-32	B	SSD	32	15	36	$10^{+0.3}_{+0.1}$	12	25	25	16	12
M14×1.5	SSD2-Y-32	A	SSD2	32, 40	16	30	$18^{+0.5}_{+0.3}$	10^{H10}	36	ø22	14	12
M16×1.5	CAV2-50-Y	A	CAV2, COV	50	25	50	$20^{+0.3}_{0}$	14^{H10}	42	(23)	18	15
M18×1.5	SCG-Y-50	A	SCG, JSG	50, 63	26	50	$20^{+0.3}_{+0.1}$	14^{H10}	40	(28)	24	14
	S1-Y-50	A	HCA, JSC3, SCA2	50	24	50	$18^{+0.4}_{+0.1}$	12^{H10}	36	(27)	19	16
	SSD-Y-50		SSD									
	S1-Y-63	A	HCA, JSC3, SCA2	63	24	50	$20^{+0.4}_{+0.1}$	14^{H10}	40	(27)	19	16
	SSD-Y-63		SSD									
	SCM-Y-50	A	SCM	50, 63	20	40	$22^{+0.5}_{+0.3}$	14^{H10}	44	28	20	16
	SSD2-Y-50	A	SSD2	50, 63	20	40	$22^{+0.5}_{+0.3}$	14^{H10}	44	ø28	20	16
M22×1.5	SCG-Y-80	A	SCG, JSG	80	31	65	$30^{+0.3}_{+0.1}$	22^{H10}	60	(40)	34	20
	CAV2-75-Y	A	CAV2, COV2	75, 100	30	65	$28^{+0.3}_{0}$	20^{H10}	60	(35)	28	22.5
	S1-Y-80	A	HCA, JSC3, SCA2	80	35	70	$28^{+0.4}_{+0.1}$	20^{H10}	56	(41)	30	25
	SSD-Y-80		SSD									
	SCM-Y-80	A	SCM	80	23	50	$28^{+0.5}_{+0.3}$	18^{H10}	56	38	27	21
	SSD2-Y-80	A	SSD2	80	23	50	$28^{+0.5}_{+0.3}$	18^{H10}	56	ø38	27	21
M26×1.5	SCG-Y-100	A	SCG, JSG	100	31	65	$30^{+0.3}_{+0.1}$	22^{H10}	60	(40)	34	20
	S1-Y-100	A	HCA, JSC3, SCA2	100	35	70	$28^{+0.4}_{+0.1}$	20^{H10}	56	(41)	30	25
	SSD-Y-100		SSD									
	SCM-Y-100	A	SCM	100	24	55	$32^{+0.5}_{+0.3}$	22^{H10}	64	44	31	24

Note: The A and B figures are a guide only. For details, refer to the accessory and external dimensions of each model.

Rod clevis (by thread size)

Thread size KK	Model No.	Shape code	Compatible model	Applicable bore size (ø)	AB	CA	CW	CD	CV	D	MB	RR
M26×1.5	SSD2-Y-100	A	SSD2	100	24	55	$32^{+0.5}_{+0.3}$	22^{H10}	64	ø44	31	24
M30×1.5	SCS2-125-Y	A	JSC4, SCS2	125	50	85	$32^{+0.4}_{+0.1}$	$25^{+0.084}_{0}$	64	(46)	35	27.5
			SSD	125, 140								
	SCS2-140-Y	A	JSC4, SCS2	140	50	90	$36^{+0.4}_{+0.1}$	$28^{+0.084}_{0}$	72	(46)	40	30
M36×1.5	SCS2-160-Y	A	JSC4, SCS2, SSD	160	60	105	$40^{+0.4}_{+0.1}$	$32^{+0.100}_{0}$	80	(55)	45	35
M40×1.5	SCS2-180-Y	A	JSC4, SCS2	180	65	115	$50^{+0.4}_{+0.1}$	$40^{+0.100}_{0}$	100	(60)	50	42.5
M45×1.5	SCS2-200-Y	A	SCS2	200	75	125	$50^{+0.4}_{+0.1}$	$40^{+0.100}_{0}$	100	(70)	50	42.5
M56×2	SCS2-250-Y	A	SCS2	250	88	150	$63^{+0.4}_{+0.1}$	$50^{+0.100}_{0}$	126	(85)	62	52.5

Note: The A and B figures are a guide only. For details, refer to the accessory and external dimensions of each model.

Custom order products

	Page
■ Change of rod end form	
How to order	Ending 86
·Rod end female thread (with recess) “N1”	Ending 87
·Rod end female thread “N11”	Ending 88
·Rod end no thread “N12”	Ending 89
·Rod end sphere R “N14”	Ending 90
·Rod end male thread ”N13”	Ending 91
·Rod end male thread (with recess) “N15”	Ending 92
·Rod end rod eye shape “N2”	Ending 93
·Rod end clevis shape “N21”	Ending 94
·Rod end with groove “N3”	Ending 95
·Rod end with groove sphere R “N31”	Ending 96
■ Specifying port/cushion needle position	Ending 98
■ Downsized port 1	Ending 99
■ Rotating assembly mounting bracket	Ending 100
■ Specifying trunnion position	Ending 101
■ Rod eye pin/clevis pin split pin	Ending 102
■ Fixing rod eye with pin	Ending 103
■ Rod eye pin/clevis pin split pin specifications, fixing rod eye with pin	Ending 104
■ Tie rod extension	Ending 105
■ Tie rod material SUS	Ending 106
■ Without bellows	Ending 106
■ Fluoro rubber only for scraper/rod packing	Ending 107
■ Other custom order products	
·Packing fluoro	Ending 108
·With 2 rod nuts	Ending 108
·Port symmetry	Ending 109
·Double solenoid	Ending 109
·Low speed	Ending 110
·With spigot	Ending 110

■ Change of rod end form (N**)

Contact CKD for details on specifications, dimensions, prices and delivery.

How to order

SCM - 00 - 40 B - 200 - N13 A23 WF25

Model No.

Compatible model

Model No.	Name
SCG	Tie rod cylinder
JSG	Tie rod cylinder with brake
SCP*3	Pencil shaped cylinder
CMK2	Medium bore size cylinder
SCA2	Medium bore size cylinder
SCS2	Large bore size cylinder
SCP*3-V	Miniature cylinder with valve
MDC2	Small direct mounting cylinder
SSD	Compact cylinder
SCM	Round shaped cylinder
ULK	Brake cylinder
JSC3/JSC4	Brake cylinder
FC*	Flat compact cylinder

Model No.

Refer to How to order for each model.

Rod end pattern

Code	Description
N1	Rod end female thread (with recess)
N11	Rod end female thread
N12	Rod end no thread
N14	Rod end sphere R
N13	Rod end male thread
N15	Rod end male thread (with recess)
N2	Rod end rod eye shape
N21	Rod end clevis bracket shape
N3	Rod end with groove
N31	Rod end with groove sphere R

Made-to-order dimensions

Refer to the dimensions list.

* Indicate only when the dimensions differ from the basic specifications.

Precautions for custom ordering rod ends

1. Depending on designated dimensions, the same strength as the standard product may not be attained.
2. Dimensions, tolerance, and finish not given in drawings are left to CKD.

Precautions for model No. selection

1. When some dimensions must be changed, indicate the dimension code after the rod end pattern code, then indicate the designated dimensions.
2. When designating multiple items, designate items in order from the dimension codes given at left of the dimensions table.
   (Example) Model No. - N13KKM18 x 1.5A40WF20
3. When thread size is specified, an end nut is not attached.
4. Basic dimensions of N11 are the same as the female thread specifications of each model.
   Basic dimensions of N13 are the same as the male thread specifications of each model.
   If designated dimensions are not required for N11 or N13, follow How to order for each model.

	(Incorrect)		(Correct)	
(Example)	SCM-00-40B-200-N13	→	SCM-00-40B-200	(since N13 is standard, code is not required)
	SSD-50-50-N11	→	SSD-50-50	(since N11 is standard, code is not required)
	SSD-50-50-N13	→	SSD-50-50-N	(“N” is used for the female thread code.)

   If the model does not have a code for the male or female threads in each model order, follow the rod end pattern given on this page.

5. Indicate the code following the rod end pattern after the model No. even if there are accessories, etc.

	(Incorrect)		(Correct)
(Example)	SSD-50-50-N13KKM8-CB	→	SSD-50-50-CB-N13KKM8

6. This custom model No. is used for input and may differ from the official model No.
7. Consult with CKD separately for how to order double rod and back to back.

Dimensions

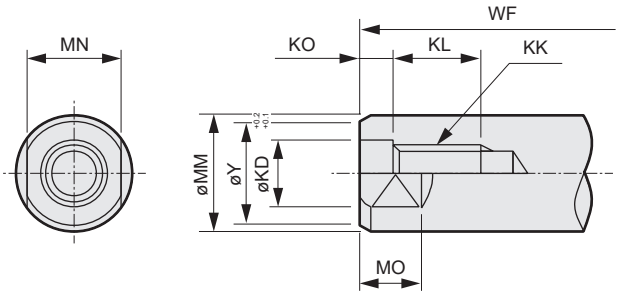

When manufacturing with dimensions listed on the dimensions table, indicate pattern code “N1”. When some dimensions must be changed, indicate the dimension code after the pattern code “N1”, then indicate the designated dimensions.

Example SCM-00-40B-200-N1WF25
WF standard dimension is 20, but this is available at 25.
When designating multiple items, indicate codes in order from the left.

*1: Dimensions of CMA2-E are shown in ( ).
*2: Dimensions of SSD-G2/G3/KG2/KG3 are shown in ( ).
*3: WF dimensions are different when selecting LB2 and FA of SSD. Contact CKD separately.
*4: Dimensions of SCM-LD are shown in ( ).
*5: Dimensions of CMK2-G2/G3 are shown in ( ).

Series	Bore size	øMM	KK	øKD	KO	KL	øY	MN	MO	WF
CMK2	20	10	M 5x0.8	5	2.5	10	8	8	5	24
CKV2	25	12	M 6x1	6	3	10	10	10	5	23(28)
ULK	32	12	M 6x1	6	3	10	10	10	5	23(28)
*5	40	14	M 8x1.25	8	4	14	12	12	6	23(28)
CMA2	20	10	M 5x0.8	5	2.5	10	8	8	5	24(11)
JSM2	30	12	M 6x1	6	3	10	10	10	5	23(7)
*1	40	14	M 8x1.25	8	4	14	12	12	6	23(6)
SCG	32	12	M 6x1	6	3	10	10	10	5	25
SCG	40	16	M 8x1.25	8	4	14	14	14	6	21
JSG	50	20	M 10x1.5	10	5	16	18	17	8	23
	63	20	M 10x1.5	10	5	16	18	17	8	23
	80	25	M 12x1.75	12	5.5	18	22	22	11	32
	100	30	M 16x2	16	6	24	27	27	13	32
SCA2	40	16	M 8x1.25	8	4	14	14	14	8	33.5
	50	20	M 10x1.5	10	5	16	18	17	8	37
	63	20	M 10x1.5	10	5	16	18	17	8	35
	80	25	M 12x1.75	12	5.5	18	22	22	11	48
	100	30	M 16x2	16	6	24	27	27	13	53
SCS2	125	32	M 18x2.5	18	7.5	26	29	27	14	65
	140	32	M 18x2.5	18	7.5	26	29	27	14	67
	160	40	M 20x2.5	20	7.5	28	36	36	15	71
	180	45	M 22x2.5	22	7.5	30	41	41	17	78
	200	50	M 24x3	24	9	32	46	46	20	88
	250	60	M 30x3.5	30	10.5	36	56	55	22	94
JSC3	40	16	M 8x1.25	8	4	14	14	14	8	30
	50	20	M 10x1.5	10	5	16	18	17	8	34
	63	20	M 10x1.5	10	5	16	18	17	8	30
	80	25	M 12x1.75	12	5.5	18	22	22	11	43.5
	100	30	M 16x2	16	6	24	27	27	13	48
JSC4	125	35	M 18x2.5	18	7.5	26	32	30	14	55
	140	35	M 18x2.5	18	7.5	26	32	30	14	57
	160	40	M 20x2.5	20	7.5	28	36	36	16	71.5
	180	45	M 22x2.5	22	7.5	30	41	41	18	78.5
SSD	12	6	M 3x0.5	3	2	6	5	5	3.5	3.5
	16	8	M 4x0.7	4	2.5	8	7	6	3.5	3.5(8.5)
	20	10	M 5x0.8	5	2.5	7	8	8	4.5	4.5(9.5)
	25	12	M 6x1	6	3	12	10	10	5	5(10)
	32	16	M 8x1.25	8	4	13	14	14	7	7(12)
	40	16	M 8x1.25	8	4	13	14	14	7	7(12)
	50	20	M10x1.5	10	4.5	15	18	17	8	8(13)
	63	20	M10x1.5	10	4.5	15	18	17	8	8(13)
	80	25	M16x2	16	6	21	22	22	10	10(15)
	100	30	M20x2.5	20	7.5	27	27	27	12	12(17)
	125	35	M22x2.5	22	7.5	30	33	30	11	16
	140	35	M22x2.5	22	7.5	30	33	30	11	16
	160	40	M24x3	24	9	33	38	36	14	17
FCD	25	12	M 5x0.8	5	2.5	9	10	10	5	5
	32	16	M 6x1	6	3	11	14	14	7	7
	40	16	M 8x1.25	8	4	13	14	14	7	8
	50	20	M 8x1.25	8	4	13	18	17	8	9.5
	63	20	M10x1.5	10	5	15	18	17	8	9.5
SCM	20	8	M 4x0.7	4	2.5	8	7	6	4	17(9)
	25	10	M 5x0.8	5	2.5	10	8	8	5	18(10)
	32	12	M 6x1	6	3	10	10	10	5.5	18(10)
	40	16	M 8x1.25	8	4	14	14	14	6	20(9)
	50	20	M10x1.5	10	5	16	18	17	8	23(10)
	63	20	M10x1.5	10	5	16	18	17	8	23(10)
	80	25	M12x1.75	12	5.5	18	22	22	11	31
	100	30	M16x2	16	6	24	27	27	13	31

Made-to-order product

Rod end female thread (pattern code “N11”)

Dimensions

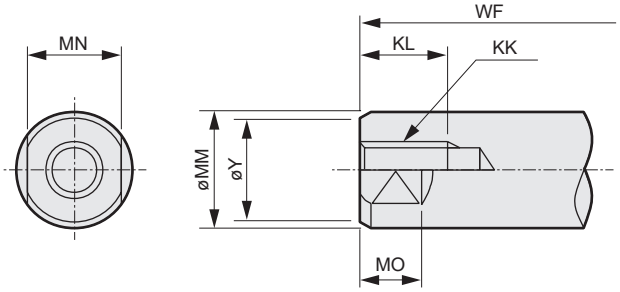

*1: “WF” is not listed in the MDC2 catalog. Dimensions of (O) should be regarded as “WF”.
*2: Y dimensions may be changed.

When manufacturing with dimensions listed on the dimensions table, indicate pattern code “N11”.
When some dimensions must be changed, indicate the dimension code after the pattern code “N11”, then indicate the designated dimensions.
Example SCM-00-40B-200-N11WF25
WF standard dimension is 20, but this is available at 25.

*3: Dimensions of CMA2-E are shown in ( ).
*4: Dimensions of SSD-G2/G3/KG2/KG3 are shown in ( ).
*5: WF dimensions are different when selecting LB2 and FA of SSD. Contact CKD separately.
*6: Dimensions of SCM-LD are shown in ( ).
*7: Dimensions of CMK2-G2/G3 are shown in ( ).

Series	Bore size	øMM	KK	KL	øY	MN	MO	WF
CMK2	20	10	M 5x0.8	10	8	8	5	24
CKV2	25	12	M 6x1	10	10	10	5	23(28)
ULK	32	12	M 6x1	10	10	10	5	23(28)
	40	14	M 8x1.25	14	12	12	6	23(28)
CMA2	20	10	M 5x0.8	10	8	8	5	24(11)
JSM2	30	12	M 6x1	10	10	10	5	23(7)
*3	40	14	M 8x1.25	14	12	12	6	23(6)
SCG	32	12	M 6x1	10	10	10	5	25
SCG	40	16	M 8x1.25	14	14	14	6	21
JSG	50	20	M10x1.5	16	18	17	8	23
	63	20	M10x1.5	16	18	17	8	23
	80	25	M12x1.75	18	22	22	11	32
	100	30	M16x2	24	27	27	13	32
SCA2	40	16	M 8x1.25	14	14	14	8	33.5
	50	20	M10x1.5	16	18	17	8	37
	63	20	M10x1.5	16	18	17	8	35
	80	25	M12x1.75	18	22	22	11	48
	100	30	M16x2	24	27	27	13	53
SCS2	125	32	M18x2.5	26	29	27	14	65
	140	32	M18x2.5	26	29	27	14	67
	160	40	M20x2.5	28	36	36	15	71
	180	45	M22x2.5	30	41	41	17	78
	200	50	M24x3	32	46	46	20	88
	250	60	M30x3.5	36	56	55	22	94
JSC3	40	16	M 8x1.25	14	14	14	8	30
	50	20	M10x1.5	16	18	17	8	34
	63	20	M10x1.5	16	18	17	8	30
	80	25	M12x1.75	18	22	22	11	43.5
	100	30	M16x2	24	27	27	13	48
JSC4	125	35	M18x2.5	26	32	30	14	55
	140	35	M18x2.5	26	32	30	14	57
	160	40	M20x2.5	28	36	36	16	71.5
	180	45	M22x2.5	30	41	41	18	78.5
SSD	12	6	M 3x0.5	6	5	5	3.5	3.5
	16	8	M 4x0.7	8	7	6	3.5	3.5(8.5)
	20	10	M 5x0.8	7	8	8	4.5	4.5(9.5)
	25	12	M 6x1	12	10	10	5	5(10)
	32	16	M 8x1.25	13	14	14	7	7(12)
	40	16	M 8x1.25	13	14	14	7	7(12)
	50	20	M10x1.5	15	18	17	8	8(13)
	63	20	M10x1.5	15	18	17	8	8(13)
	80	25	M16x2	21	22	22	10	10(15)
	100	30	M20x2.5	27	27	27	12	12(17)
	125	35	M22x2.5	30	33	30	11	16
	140	35	M22x2.5	30	33	30	11	16
	160	40	M24x3	33	38	36	14	17
FCD	25	12	M 5x0.8	9	10	10	5	5
	32	16	M 6x1	11	14	14	7	7
	40	16	M 8x1.25	13	14	14	7	8
	50	20	M 8x1.25	13	18	17	8	9.5
	63	20	M10x1.5	15	18	17	8	9.5
SCM	20	8	M 4x0.7	8	7	6	4	17(9)
	25	10	M 5x0.8	10	8	8	5	18(10)
	32	12	M 6x1	10	10	10	5.5	18(10)
	40	16	M 8x1.25	14	14	14	6	20(9)
	50	20	M10x1.5	16	18	17	8	23(10)
	63	20	M10x1.5	16	18	17	8	23(10)
	80	25	M12x1.75	18	22	22	11	31
	100	30	M16x2	24	27	27	13	31
MDC2	6	4	M2.5x0.45	4	3.5	3.5	2.5	3
*1	8	5	M 3x0.5	5	4.5	4.5	2.5	3
	10	6	M 3x0.5	5	5	5	2.5	3

Dimensions

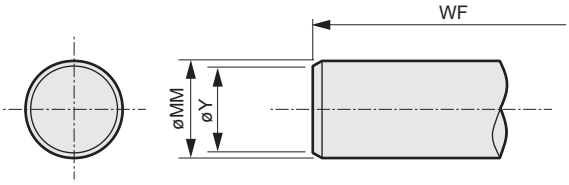

*1: “WF” is not listed in the SCP*3 catalog. Dimensions of “13 mm” should be regarded as “WF”.
*2: SCP*3-V is also the same.
*3: For SSD-KU/SCM-U/SCA2-U (low friction cylinder), this pattern is not available.
*4: “WF “ is not listed in the MDC2 catalog. Dimensions of (O) should be regarded as “WF”.

When manufacturing with dimensions listed on the dimensions table, indicate pattern code “N12”. When some dimensions must be changed, indicate the dimension code after the pattern code “N12”, then indicate the designated dimensions.

Example
SCM-00-40B-200-N12WF25
WF standard dimension is 20, but this is available at 25.

*5: Dimensions of CMA2-E are shown in ( ).
*6: Dimensions of SSD-G2/G3/KG2/KG3 are shown in ( ).
*7: WF dimensions are different when selecting LB2 and FA of SSD. Contact CKD separately.
*8: Dimensions of SCM-LD are shown in ( ).
*9: Dimensions of CMK2-G2/G3 are shown in ( ).

Series	Bore size	øMM	øY	WF
SCP*3 *1	6	3	2.5	13
	10	4	3.5	13
	16	5	4.5	13
CMK2 CKV2 ULK *9	20	10	8	24
	25	12	10	23(28)
	32	12	10	23(28)
	40	14	12	23(28)
CMA2 JSM2 *5	20	10	8	24(11)
	30	12	10	23(7)
	40	14	12	23(6)
SCG	32	12	10	25
SSG	40	16	14	21
	50	20	18	23
	63	20	18	23
	80	25	22	32
	100	30	27	32
SCA2 *3	40	16	14	33.5
	50	20	18	37
	63	20	18	35
	80	25	22	48
	100	30	27	53
SCS2	125	32	29	65
	140	32	29	67
	160	40	36	71
	180	45	41	78
	200	50	46	88
	250	60	56	94
JSC3	40	16	14	30
	50	20	18	34
	63	20	18	30
	80	25	22	43.5
	100	30	27	48
JSC4	125	35	32	55
	140	35	32	57
	160	40	36	71.5
	180	45	41	78.5
SCP*3-V *2	10	4	3.5	13
	16	5	4.5	13
SSD *3	12	6	5	3.5
	16	8	7	3.5(8.5)
	20	10	8	4.5(9.5)
	25	12	10	5(10)
	32	16	14	7(12)
	40	16	14	7(12)
	50	20	18	8(13)
	63	20	18	8(13)
	80	25	22	10(15)
	100	30	27	12(17)
	125	35	33	16
	140	35	33	16
	160	40	38	17
FCD	25	12	10	5
	32	16	14	7
	40	16	14	8
	50	20	18	9.5
	63	20	18	9.5
SCM *3	20	8	7	17(9)
	25	10	8	18(10)
	32	12	10	18(10)
	40	16	14	20(9)
	50	20	18	23(10)
	63	20	18	23(10)
	80	25	22	31
	100	30	27	31
MDC2 *4	4	2	1.5	3
	6	4	3.5	3
	8	5	4.5	3
	10	6	5	3

Made-to-order product

Rod end sphere R (pattern code “N14”)

Dimensions

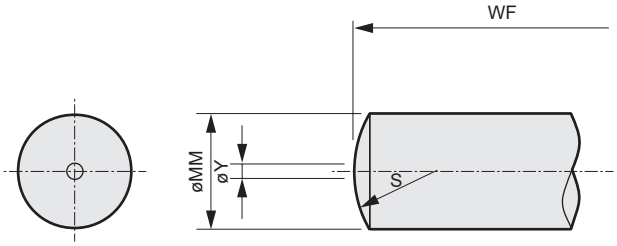

*1: “WF” is not listed in the SCP*3 catalog. Dimensions of “13 mm” should be regarded as “WF”.
*2: SCP*3-V is also the same.
*3: For SSD-KU/SCM-U/SCA2-U (low friction cylinder), this pattern is not available.

When manufacturing with dimensions listed on the dimensions table, indicate pattern code “N14”.
When some dimensions must be changed, indicate the dimension code after the pattern code “N14”, then indicate the designated dimensions.
Example SCM-00-40B-200-N14WF25
WF standard dimension is 20, but this is available at 25.
*4: Dimensions of SSD-G2/G3/KG2/KG3 are shown in ( ).
*5: WF dimensions are different when selecting LB2 and FA of SSD. Contact CKD separately.
*6: Dimensions of SCM-LD are shown in ( ).
*7: Dimensions of CMK2-G2/G3 are shown in ( ).

Series	Bore size	øMM	øY	S	WF
SCP*3	6	3	0.3	3	13
*1	10	4	0.3	4	13
	16	5	0.3	5	13
CMK2	20	10	0.5	10	24
CKV2	25	12	0.5	12	23(28)
ULK	32	12	0.5	12	23(28)
*7	40	14	0.5	14	23(28)
SCG	32	12	0.5	12	25
SCG	40	16	1	16	21
JSG	50	20	1	20	23
	63	20	1	20	23
	80	25	1	25	32
	100	30	1	30	32
SCA2	40	16	1	16	33.5
	50	20	1	20	37
	63	20	1	20	35
	80	25	1	25	48
	100	30	1	30	53
SCS2	125	32	2	32	65
	140	32	2	32	67
	160	40	2	40	71
	180	45	2	45	78
	200	50	2	50	88
	250	60	2	60	94
JSC3	40	16	1	16	30
	50	20	1	20	34
	63	20	1	20	30
	80	25	1	25	43.5
	100	30	1	30	48
JSC4	125	35	2	35	55
	140	35	2	35	57
	160	40	2	40	71.5
	180	45	2	45	78.5
SCP*3-V	10	4	0.3	4	13
*2	16	5	0.3	5	13
SSD	12	6	0.5	6	3.5
*3	16	8	0.5	8	3.5(8.5)
	20	10	0.5	10	4.5(9.5)
	25	12	0.5	12	5(10)
	32	16	1	16	7(12)
	40	16	1	16	7(12)
	50	20	1	20	8(13)
	63	20	1	20	8(13)
	80	25	1	25	10(15)
	100	30	1	30	12(17)
	125	35	2	35	16
	140	35	2	35	16
	160	40	2	40	17
SCM	20	8	0.5	8	17(9)
*3	25	10	0.5	10	18(10)
	32	12	0.5	12	18(10)
	40	16	1	16	20(9)
	50	20	1	20	23(10)
	63	20	1	20	23(10)
	80	25	1	25	31
	100	30	1	30	31

Dimensions

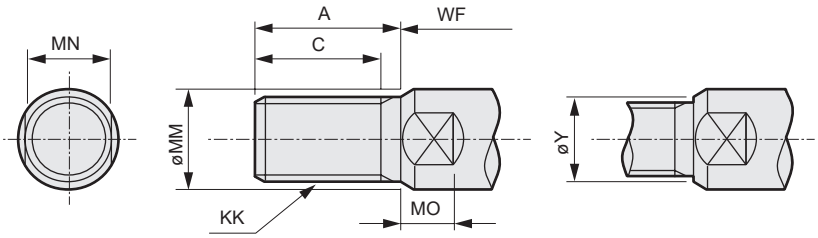

*1: “WF” is not listed in the SCP*3 catalog. Dimensions of “13 mm” should be regarded as “WF”.
*2: SCP*3-V is also the same.
*3: When thread size is specified, an end nut is not attached. Y dimensions may be changed.

When manufacturing with dimensions listed on the dimensions table, indicate pattern code “N13”.
When some dimensions must be changed, indicate the dimension code after the pattern code “N13”, then indicate the designated dimensions.
Example SCM-00-40B-200-N13A23WF27
This is available at 27 instead of WF standard dimension of 20, and 23 instead of A standard dimension of 30.
When C dimension is not specified, the product is manufactured with standard differential dimension of (A-C).
*4: Dimensions of CMA2-E are shown in ( ).
*5: Dimensions of SSD-G2/G3/KG2/KG3 are shown in ( ).
*6: WF dimensions are different when selecting LB2 and FA of SSD. Contact CKD separately.
*7: Dimensions of SCM-LD are shown in ( ).
*8: Dimensions of CMK2-G2/G3 are shown in ( ).

Series	Bore size	øMM	KK	C	A	øY	MN	MO	WF
SCP*3	6	3	M 3 x 0.5	15	-	-	-	-	13
*1	10	4	M 4 x 0.7	15	-	-	-	-	13
	16	5	M 5 x 0.8	15	-	-	-	-	13
CMK2	20	10	M 8 x 1	18	20	8	8	5	24
CKV2	25	12	M 10 x 1.25	20	23	10	10	5	23 (28)
ULK	32	12	M 10 x 1.25	20	23	10	10	5	23 (28)
*8	40	14	M 12 x 1.5	22	25	12	12	6	23 (28)
CMA2	20	10	M 8 x 1	18	20	8	8	5	24 (11)
JSM2	30	12	M 10 x 1.25	20	23	10	10	5	23 (7)
*4	40	14	M 12 x 1.5	22	25	12	12	6	23 (6)
SCG	32	12	M 10 x 1.25	19.5	22	10	10	5.5	25
SCG	40	16	M 14 x 1.5	27	30	14	14	6	21
JSG	50	20	M 18 x 1.5	32	35	18	17	8	23
	63	20	M 18 x 1.5	32	35	18	17	8	23
	80	25	M 22 x 1.5	37	40	22	22	11	32
	100	30	M 26 x 1.5	37	40	26	27	13	32
SCA2	40	16	M 14 x 1.5	20	22	14	14	8	33.5
	50	20	M 18 x 1.5	26	28	18	17	8	37
	63	20	M 18 x 1.5	26	28	18	17	8	35
	80	25	M 22 x 1.5	34	36	22	22	11	48
	100	30	M 26 x 1.5	43	45	26	27	13	53
SCS2	125	32	M 30 x 1.5	47	50	30	27	14	65
	140	32	M 30 x 1.5	47	50	30	27	14	67
	160	40	M 36 x 1.5	53	56	36	36	15	71
	180	45	M 40 x 1.5	60	63	40	41	17	78
	200	50	M 45 x 1.5	69	72	45	46	20	88
	250	60	M 56 x 2	84	88	56	55	22	94
JSC3	40	16	M 14 x 1.5	20	22	14	14	8	30
	50	20	M 18 x 1.5	26	28	18	17	8	34
	63	20	M 18 x 1.5	26	28	18	17	8	30
	80	25	M 22 x 1.5	34	36	22	22	11	43.5
	100	30	M 26 x 1.5	43	45	26	27	13	48
JSC4	125	35	M 30 x 1.5	47	50	30	30	14	55
	140	35	M 30 x 1.5	47	50	30	30	14	57
	160	40	M 36 x 1.5	53	56	36	36	16	71.5
	180	45	M 40 x 1.5	60	63	40	41	18	78.5
SCP*3-V	10	4	M 4 x 0.7	15	-	-	-	-	13
*2	16	5	M 5 x 0.8	15	-	-	-	-	13
SSD	12	6	M 5 x 0.8	9	10.5	5	5	3.5	3.5
	16	8	M 6 x 1	10	12	6	6	3.5	3.5 (8.5)
	20	10	M 8 x 1.25	12	14	8	8	4.5	4.5 (9.5)
	25	12	M 10 x 1.25	15	17.5	10	10	5	5 (10)
	32	16	M 14 x 1.5	20.5	23.5	14	14	5	5 (10)
	40	16	M 14 x 1.5	20.5	23.5	14	14	5	5 (10)
	50	20	M 18 x 1.5	26	28.5	18	17	5	5 (10)
	63	20	M 18 x 1.5	26	28.5	18	17	5	5 (10)
	80	25	M 22 x 1.5	32.5	35.5	22	22	8	8 (13)
	100	30	M 26 x 1.5	32.5	35.5	26	27	8	8 (13)
	125	35	M 30 x 1.5	42	45	30	30	11	13
	140	35	M 30 x 1.5	42	45	30	30	11	13
	160	40	M 36 x 1.5	47	50	36	36	11	14
FCD	25	12	M 10 x 1.25	20	22	10	10	4	5
	32	16	M 14 x 1.5	20	22	14	14	6	7
	40	16	M 14 x 1.5	20	22	14	14	6	7
	50	20	M 18 x 1.5	26	28	18	17	8	8
	63	20	M 18 x 1.5	26	28	18	17	8	8
SCM	20	8	M 8 x 1.25	16	18	-	6	4	17 (9)
	25	10	M 10 x 1.25	20	22	-	8	5	18 (10)
	32	12	M 10 x 1.25	20	22	10	10	5.5	18 (10)
	40	16	M 14 x 1.5	27	30	14	14	6	20 (9)
	50	20	M 18 x 1.5	32	35	18	17	8	23 (10)
	63	20	M 18 x 1.5	32	35	18	17	8	23 (10)
	80	25	M 22 x 1.5	37	40	22	22	11	31
	100	30	M 26 x 1.5	37	40	26	27	13	31
MDC2	6	4	M 3 x 0.5	6	8	3.5	3.5	2.5	3
*3	8	5	M 4 x 0.7	7	9	4.5	4.5	2.5	3
	10	6	M 5 x 0.8	9	11	5	5	2.5	3

Made-to-order product

Rod end male thread (with recess) (pattern code “N15”) dimensions

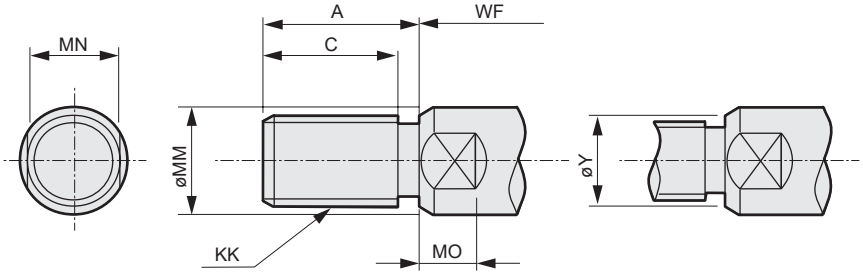

*1: When thread size is specified, an end nut is not attached.Y dimensions may be changed.

When manufacturing with dimensions listed on the dimensions table, indicate pattern code "N15".
When some dimensions must be changed, indicate the dimension code after the pattern code "N15", then indicate the designated dimensions.
Example SCM-00-40B-200-N15C20A23
This is available at 20 instead of C standard dimension of 27, and 23 instead of A standard dimension of 30. When C dimension is not specified, the product is manufactured with standard differential dimension of (A-C).

*2: CMA2-E is indicated with dimensions in ( ).
*3: Dimensions of SSD-G2/G3/KG2/KG3 are shown in ( ).
*4: WF dimensions are different when selecting LB2 and FA of SSD. Contact CKD separately.
*5: Dimensions of SCM-LD are shown in ( ).
*6: CMK2-G2/G3 is the dimensions in ( ).

Series	Bore size	øMM	KK	C	A	øY	MN	MO	WF
CMK2	20	10	M 8 x 1	18	20	8	8	5	24
CKV2	25	12	M 10 x 1.25	20	23	10	10	5	23 (28)
ULK	32	12	M 10 x 1.25	20	23	10	10	5	23 (28)
*6	40	14	M 12 x 1.5	22	25	12	12	6	23 (28)
CMA2	20	10	M 8 x 1	18	20	8	8	5	24 (11)
JSM2	30	12	M 10 x 1.25	20	23	10	10	5	23 (7)
*2	40	14	M 12 x 1.5	22	25	12	12	6	23 (6)
SCG	32	12	M 10 x 1.25	19.5	22	10	10	5	25
SCG	40	16	M 14 x 1.5	27	30	14	14	6	21
JSG	50	20	M 18 x 1.5	32	35	18	17	8	23
	63	20	M 18 x 1.5	32	35	18	17	8	23
	80	25	M 22 x 1.5	37	40	22	22	11	32
	100	30	M 26 x 1.5	37	40	26	27	13	32
SCA2	40	16	M 14 x 1.5	20	22	14	14	8	33.5
	50	20	M 18 x 1.5	26	28	18	17	8	37
	63	20	M 18 x 1.5	26	28	18	17	8	35
	80	25	M 22 x 1.5	34	36	22	22	11	48
	100	30	M 26 x 1.5	43	45	26	27	13	53
SCS2	125	32	M 30 x 1.5	47	50	30	27	14	65
	140	32	M 30 x 1.5	47	50	30	27	14	67
	160	40	M 36 x 1.5	53	56	36	36	15	71
	180	45	M 40 x 1.5	60	63	40	41	17	78
	200	50	M 45 x 1.5	69	72	45	46	20	88
	250	60	M 56 x 2	84	88	56	55	22	94
JSC3	40	16	M 14 x 1.5	20	22	14	14	8	30
	50	20	M 18 x 1.5	26	28	18	17	8	34
	63	20	M 18 x 1.5	26	28	18	17	8	30
	80	25	M 22 x 1.5	34	36	22	22	11	43.5
	100	30	M 26 x 1.5	43	45	26	27	13	48
JSC4	125	35	M 30 x 1.5	47	50	30	30	14	55
	140	35	M 30 x 1.5	47	50	30	30	14	57
	160	40	M 36 x 1.5	53	56	36	36	16	71.5
	180	45	M 40 x 1.5	60	63	40	41	18	78.5
SSD	12	6	M 5 x 0.8	9	10.5	5	5	3.5	3.5
	16	8	M 6 x 1	10	12	6	6	3.5	3.5 (8.5)
	20	10	M 8 x 1.25	12	14	8	8	4.5	4.5 (9.5)
	25	12	M 10 x 1.25	15	17.5	10	10	5	5 (10)
	32	16	M 14 x 1.5	20.5	23.5	14	14	5	5 (10)
	40	16	M 14 x 1.5	20.5	23.5	14	14	5	5 (10)
	50	20	M 18 x 1.5	26	28.5	18	17	5	5 (10)
	63	20	M 18 x 1.5	26	28.5	18	17	5	5 (10)
	80	25	M 22 x 1.5	32.5	35.5	22	22	8	8 (13)
	100	30	M 26 x 1.5	32.5	35.5	26	27	8	8 (13)
	125	35	M 30 x 1.5	42	45	30	30	11	13
	140	35	M 30 x 1.5	42	45	30	30	11	13
	160	40	M 36 x 1.5	47	50	36	36	11	14
FCD	25	12	M 10 x 1.25	20	22	10	10	4	5
	32	16	M 14 x 1.5	20	22	14	14	6	7
	40	16	M 14 x 1.5	20	22	14	14	6	7
	50	20	M 18 x 1.5	26	28	18	17	8	8
	63	20	M 18 x 1.5	26	28	18	17	8	8
SCM	20	8	-	-	-	-	-	-	-
	25	10	-	-	-	-	-	-	-
	32	12	M 10 x 1.25	20	22	10	10	5.5	18 (10)
	40	16	M 14 x 1.5	27	30	14	14	6	20 (9)
	50	20	M 18 x 1.5	32	35	18	17	8	23 (10)
	63	20	M 18 x 1.5	32	35	18	17	8	23 (10)
	80	25	M 22 x 1.5	37	40	22	22	11	31
	100	30	M 26 x 1.5	37	40	26	27	13	31

Dimensions

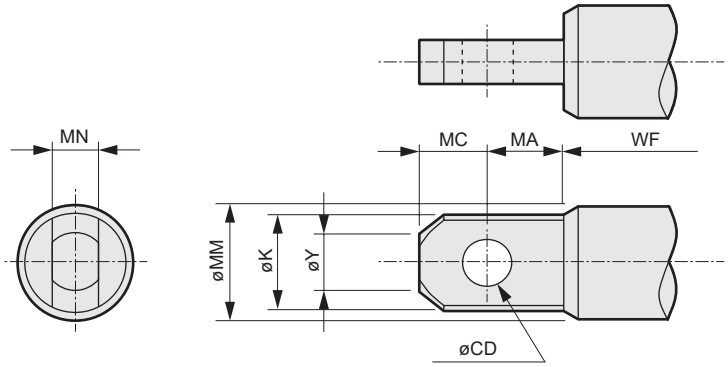

Tolerance

Code	Dimensions	Tolerance
CD	Tolerances at right are used uniformly regardless of dimensions	H10
MN	10 or less	-0.1 -0.2
	10< ≤30	-0.1 -0.3
	30< ≤80	-0.1 -0.4

When manufacturing with dimensions listed on the dimensions table, indicate pattern code “N2”.
When some dimensions must be changed, indicate the dimension code after the pattern code “N2”, then indicate the designated dimensions.
Example: SCM-00-40B-200-N2CD5MA7.5
CD standard dimension is 6, but this is available at 5.
MA standard dimension is 9, but this is manufactured at 7.5.

*1: Dimensions of SSD-G2/G3/KG2/KG3 are shown in ( ).
*2: WF dimensions are different when selecting LB2 and FA of SSD. Contact CKD separately.
*3: Dimensions of SCM-LD are shown in ( ).
*4: Dimensions of CMK2-G2/G3 are shown in ( ).

Series	Bore size	øMM	øCD	MN	MA	MC	øY	øK	WF
CMK2	20	10	4	4	6	4	5.4	9	24
CKV2	25	12	5	5	7.5	5	6.6	11	23(28)
ULK	32	12	5	5	7.5	5	6.6	11	23(28)
*4	40	14	6	6	9	6	7.8	13	23(28)
SCG	32	12	5	5	7.5	5	6.6	11	25
SCG	40	16	6	6	9	6	9	15	21
JSG	50	20	8	8	12	8	11.4	19	23
	63	20	8	8	12	8	11.4	19	23
	80	25	10	10	15	10	14.4	24	32
	100	30	12	12	18	12	17.4	29	32
SCA2	40	16	6	6	9	6	9	15	33.5
	50	20	8	8	12	8	11.4	19	37
	63	20	8	8	12	8	11.4	19	35
	80	25	10	10	15	10	14.4	24	48
	100	30	12	12	18	12	17.4	29	53
SCS2	125	32	14	14	21	14	19.8	30	65
	140	32	14	14	21	14	19.8	30	67
	160	40	16	16	24	16	22.8	38	71
	180	45	18	18	27	18	25.8	43	78
	200	50	20	20	30	20	28.8	48	88
	250	60	24	24	36	24	34.8	58	94
JSC3	40	16	6	6	9	6	9	15	30
	50	20	8	8	12	8	11.4	19	34
	63	20	8	8	12	8	11.4	19	30
	80	25	10	10	15	10	14.4	24	43.5
	100	30	12	12	18	12	17.4	29	48
JSC4	125	35	14	14	21	14	19.8	33	55
	140	35	14	14	21	14	19.8	33	57
	160	40	16	16	24	16	22.8	38	71.5
	180	45	18	18	27	18	25.8	43	78.5
SSD	12	6	-	-	-	-	-	-	-
	16	8	-	-	-	-	-	-	-
	20	10	4	4	6	4	5.4	9	4.5(9.5)
	25	12	5	5	7.5	5	6.6	11	5(10)
	32	16	6	6	9	6	9	15	5(10)
	40	16	6	6	9	6	9	15	5(10)
	50	20	8	8	12	8	11.4	19	5(10)
	63	20	8	8	12	8	11.4	19	5(13)
	80	25	10	10	15	10	14.4	24	8(13)
	100	30	12	12	18	12	17.4	29	8(13)
	125	35	14	14	21	14	19.8	33	13
	140	35	14	14	21	14	19.8	33	13
	160	40	16	16	24	16	22.8	38	14
SCM	20	8	-	-	-	-	-	-	-
	25	10	4	4	6	4	5.4	9	18(10)
	32	12	5	5	7.5	5	6.6	11	18(10)
	40	16	6	6	9	6	9	15	20(9)
	50	20	8	8	12	8	11.4	19	23(10)
	63	20	8	8	12	8	11.4	19	23(10)
	80	25	10	10	15	10	14.4	24	31
	100	30	12	12	18	12	17.4	29	31

Made-to-order product

Rod end clevis shape (pattern code “N21”)

Dimensions

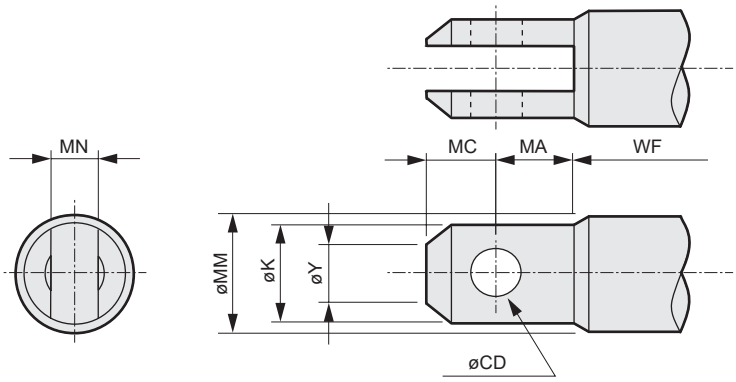

Tolerance

Code	Dimensions	Tolerance
CD	Tolerances at right are used uniformly, regardless of dimensions	H10
MN	10 or less	+0.2 +0.1
	10< ≤30	+0.3 +0.1
	30< ≤80	+0.4 +0.1

When manufacturing with dimensions listed on the dimensions table, indicate pattern code “N21”.
When some dimensions must be changed, indicate the dimension code after the pattern code “N21”, then indicate the designated dimensions.

Example: SCM-00-40B-200-N21CD5MA7.5
CD standard dimension is 6, but this is available at 5.
MA standard dimension is 9, but this is manufactured at 7.5.

*1: Dimensions of SSD-G2/G3/KG2/KG3 are shown in ( ).
*2: WF dimensions are different when selecting LB2 and FA of SSD. Contact CKD separately.
*3: Dimensions of SCM-LD are shown in ( ).
*4: Dimensions of CMK2-G2/G3 are shown in ( ).

Series	Bore size	øMM	øCD	MN	MA	MC	øY	øK	WF
CMK2	20	10	4	4	6	4	5.4	9	24
CKV2	25	12	5	5	7.5	5	6.6	11	23(28)
ULK	32	12	5	5	7.5	5	6.6	11	23(28)
*4	40	14	6	6	9	6	7.8	13	23(28)
SCG	32	12	5	5	7.5	5	6.6	11	25
SCG	40	16	6	6	9	6	9	15	21
JSG	50	20	8	8	12	8	11.4	19	23
	63	20	8	8	12	8	11.4	19	23
	80	25	10	10	15	10	14.4	24	32
	100	30	12	12	18	12	17.4	29	32
SCA2	40	16	6	6	9	6	9	15	33.5
	50	20	8	8	12	8	11.4	19	37
	63	20	8	8	12	8	11.4	19	35
	80	25	10	10	15	10	14.4	24	48
	100	30	12	12	18	12	17.4	29	53
SCS2	125	32	14	14	21	14	19.8	30	65
	140	32	14	14	21	14	19.8	30	67
	160	40	16	16	24	16	22.8	38	71
	180	45	18	18	27	18	25.8	43	78
	200	50	20	20	30	20	28.8	48	88
	250	60	24	24	36	24	34.8	58	94
JSC3	40	16	6	6	9	6	9	15	30
	50	20	8	8	12	8	11.4	19	34
	63	20	8	8	12	8	11.4	19	30
	80	25	10	10	15	10	14.4	24	43.5
	100	30	12	12	18	12	17.4	29	48
JSC4	125	35	14	14	21	14	19.8	33	55
	140	35	14	14	21	14	19.8	33	57
	160	40	16	16	24	16	22.8	38	71.5
	180	45	18	18	27	18	25.8	43	78.5
SSD	12	6	-	-	-	-	-	-	-
	16	8	-	-	-	-	-	-	-
	20	10	4	4	6	4	5.4	9	4.5(9.5)
	25	12	5	5	7.5	5	6.6	11	5(10)
	32	16	6	6	9	6	9	15	5(10)
	40	16	6	6	9	6	9	15	5(10)
	50	20	8	8	12	8	11.4	19	5(10)
	63	20	8	8	12	8	11.4	19	5(10)
	80	25	10	10	15	10	14.4	24	8(13)
	100	30	12	12	18	12	17.4	29	8(13)
	125	35	14	14	21	14	19.8	33	13
	140	35	14	14	21	14	19.8	33	13
	160	40	16	16	24	16	22.8	38	14
SCM	20	8	-	-	-	-	-	-	-
	25	10	4	4	6	4	5.4	9	18(10)
	32	12	5	5	7.5	5	6.6	1	18(10)
	40	16	6	6	9	6	9	15	20(9)
	50	20	8	8	12	8	11.4	19	23(10)
	63	20	8	8	12	8	11.4	19	23(10)
	80	25	10	10	15	10	14.4	24	31
	100	30	12	12	18	12	17.4	29	31

Dimensions

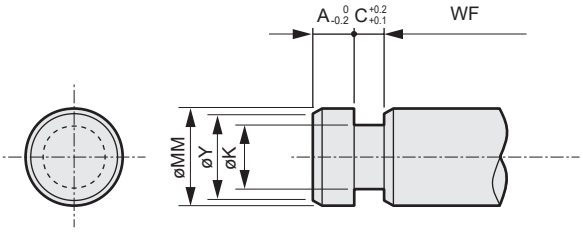

When manufacturing with dimensions listed on the dimensions table, indicate pattern code “N3”.
When some dimensions must be changed, indicate the dimension code after the pattern code “N3”, then indicate the designated dimensions.
Example: SCM-00-40B-200-N3WF25
WF standard dimension is 20, but this is available at 25.
*1: Dimensions of SSD-G2/G3/KG2/KG3 are shown in ( ).
*2: WF dimensions are different when selecting LB2 and FA of SSD. Contact CKD separately.
*3: Dimensions of SCM-LD are shown in ( ).
*4: Dimensions of CMK2-G2/G3 are shown in ( ).

Series	Bore size	øMM	øK	C	A	øY	WF
CMK2	20	10	6	4	4	8	24
CKV2	25	12	7.2	4.8	4.8	10	23(28)
ULK	32	12	7.2	4.8	4.8	10	23(28)
*4	40	14	8.4	5.6	5.6	12	23(28)
SCG	32	12	7.2	4.8	4.8	10	25
SCG	40	16	9.6	6.4	6.4	14	21
JSG	50	20	12	8	8	18	23
	63	20	12	8	8	18	23
	80	25	15	10	10	22	32
	100	30	18	12	12	27	32
SCA2	40	16	9.6	6.4	6.4	14	33.5
	50	20	12	8	8	18	37
	63	20	12	8	8	18	35
	80	25	15	10	10	22	48
	100	30	18	12	12	27	53
SCS2	125	32	21	14	14	29	65
	140	32	21	14	14	29	67
	160	40	24	16	16	36	71
	180	45	27	18	18	41	78
	200	50	30	20	20	46	88
	250	60	36	22	22	56	94
JSC3	40	16	9.6	6.4	6.4	14	30
	50	20	12	8	8	18	34
	63	20	12	8	8	18	30
	80	25	15	10	10	22	43.5
	100	30	18	12	12	27	48
JSC4	125	35	21	14	14	32	55
	140	35	21	14	14	32	57
	160	40	24	16	16	36	71.5
	180	45	27	18	18	41	78.5
SSD	12	6	-	-	-	-	-
	16	8	-	-	-	-	-
	20	10	6	4	4	8	4.5(9.5)
	25	12	7.2	4.8	4.8	10	5(10)
	32	16	9.6	6.4	6.4	14	7(12)
	40	16	9.6	6.4	6.4	14	7(12)
	50	20	12	8	8	18	8(13)
	63	20	12	8	8	18	8(13)
	80	25	15	10	10	22	10(15)
	100	30	18	12	12	27	12(17)
	125	35	21	14	14	33	16
	140	35	21	14	14	33	16
	160	40	24	16	16	38	17
SCM	20	8	-	-	-	-	-
	25	10	6	4	4	8	18(10)
	32	12	7.2	4.8	4.8	10	18(10)
	40	16	9.6	6.4	6.4	14	20(9)
	50	20	12	8	8	18	23(10)
	63	20	12	8	8	18	23(10)
	80	25	15	10	10	22	31
	100	30	18	12	12	27	31

Made-to-order product

Rod end with groove sphere R (pattern code “N31”)

Dimensions

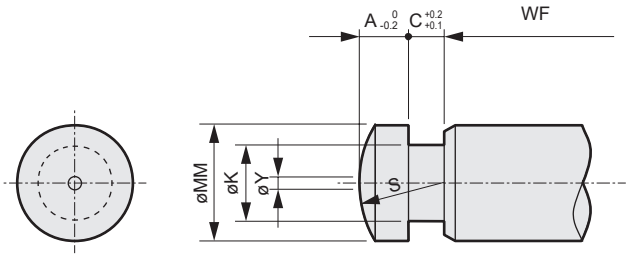

When manufacturing with dimensions listed on the dimensions table, indicate pattern code “N31”. When some dimensions must be changed, indicate the dimension code after the pattern code “N31”, then indicate the designated dimensions.

Example SCM-00-40B-200-N31WF25

WF standard dimension is 20, but this is available at 25.

*1: Dimensions of SSD-G2/G3/KG2/KG3 are shown in ( ).

*2: WF dimensions are different when selecting LB2 and FA of SSD. Contact CKD separately.

*3: Dimensions of SCM-LD are shown in ( ).

*4: Dimensions of CMK2-G2/G3 are shown in ( ).

Series	Bore size	øMM	øK	C	A	S	øY	WF
CMK2	20	10	6	4	4	10	0.5	24
CKV2	25	12	7.2	4.8	4.8	12	0.5	23(28)
ULK	32	12	7.2	4.8	4.8	12	0.5	23(28)
*4	40	14	8.4	5.6	5.6	14	0.5	23(28)
SCG	32	12	7.2	4.8	4.8	12	0.5	25
SCG	40	16	9.6	6.4	6.4	16	1	21
JSG	50	20	12	8	8	20	1	23
	63	20	12	8	8	20	1	23
	80	25	15	10	10	25	1	32
	100	30	18	12	12	30	1	32
SCA2	40	16	9.6	6.4	6.4	16	1	33.5
	50	20	12	8	8	20	1	37
	63	20	12	8	8	20	1	35
	80	25	15	10	10	25	1	48
	100	30	18	12	12	30	1	53
SCS2	125	32	21	14	14	32	1	65
	140	32	21	14	14	32	2	67
	160	40	24	16	16	40	2	71
	180	45	27	18	18	45	2	78
	200	50	30	20	20	50	2	88
	250	60	36	22	22	60	2	94
JSC3	40	16	9.6	6.4	6.4	16	1	30
	50	20	12	8	8	20	1	34
	63	20	12	8	8	20	1	30
	80	25	15	10	10	25	1	43.5
	100	30	18	12	12	30	1	48
JSC4	125	35	21	14	14	35	1	55
	140	35	21	14	14	35	2	57
	160	40	24	16	16	40	2	71.5
	180	45	27	18	18	45	2	78.5
SSD	12	6	-	-	-	-	-	-
	16	8	-	-	-	-	-	-
	20	10	6	4	4	10	0.5	4.5(9.5)
	25	12	7.2	4.8	4.8	12	0.5	5(10)
	32	16	9.6	6.4	6.4	16	1	7(12)
	40	16	9.6	6.4	6.4	16	1	7(12)
	50	20	12	8	8	20	1	8(13)
	63	20	12	8	8	20	1	8(13)
	80	25	15	10	10	25	1	10(15)
	100	30	18	12	12	30	1	12(17)
	125	35	21	14	14	35	2	16
	140	35	21	14	14	35	2	16
	160	40	24	16	16	40	2	17
SCM	20	8	-	-	-	-	-	-
	25	10	6	4	4	10	0.5	18(10)
	32	12	7.2	4.8	4.8	12	0.5	18(10)
	40	16	9.6	6.4	6.4	16	1	20(9)
	50	20	12	8	8	20	1	23(10)
	63	20	12	8	8	20	1	23(10)
	80	25	15	10	10	25	1	31
	100	30	18	12	12	30	1	31

MEMO

■ Port/cushion needle position specification (-XR****)

Content: Specify the port and cushion needle positions.

How to order

SCA2 - 00 - 40 B - 100 - XR 1334

Model No.

*1

Compatible model	
Model No.	Name
SCA2	Medium bore size cylinder
SCS2	Large bore size cylinder

Model No.
Refer to How to order for each model.

Port/cushion needle position	
1	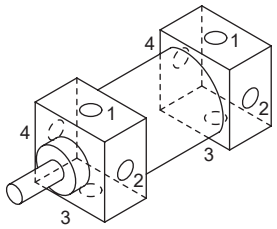
2	
3	
4	

⚠ Precautions for model No. selection

*1: The numbers indicate, in order, the port position on rod side, the needle position on rod side, the port position on head side and the needle position on head side.
Numbering is as viewed from the piston rod side.
*2: Combination in which port and needle position are on the same side is not available for SCA2.

Ending

Outline drawing

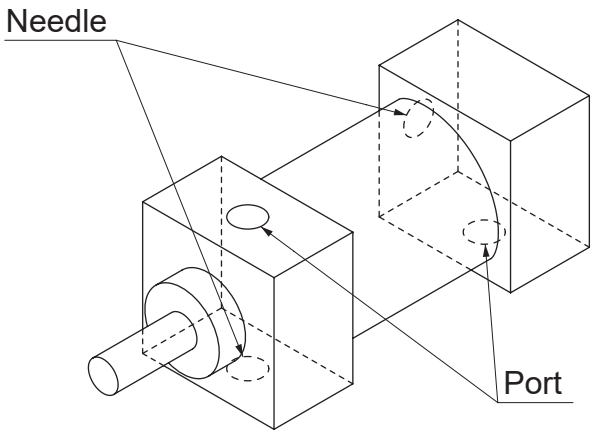

■ Downsized port (-XF)

Content: Reduce the port size to the next size down from standard. (Using bushing)

How to order

SCS2 - 00 - 125 B - 100 - XF

Model No.

Compatible model	
Model No.	Name
SCS2	Large bore size cylinder

Model No.
Refer to How to order for each model.

Dimensions

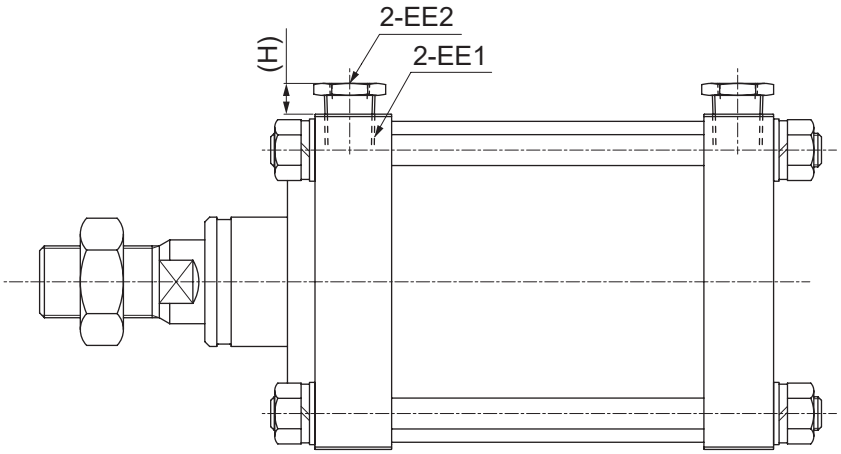

Bore size	EE1	EE2	H
ø125	Rc1/2	Rc3/8	13
ø140	Rc3/4	Rc1/2	15
ø160			
ø180			
ø200			
ø250	Rc1	Rc3/4	14

■ Rotating assembly mounting bracket (-XK*)

Content: Specify the mounting bracket mounting position.

How to order

SCA2 - 00 - 40 B - 100 - XK1

Model No.

Compatible model	
Model No.	Name
SCA2	Medium bore size cylinder
SCG	Tie rod cylinder
SCS2	Large bore size cylinder
JSC3	Brake cylinder
JSG	Tie rod cylinder with brake
JSC4	Brake cylinder

Model No.
Refer to How to order for each model.

*1

Mounting bracket installation position	
XK1	The mounting bracket is rotated 90° clockwise.
XK2	The mounting bracket is rotated 180° clockwise.
XK3	The mounting bracket is rotated 270° clockwise.

⚠ Precautions for model No. selection

*1: Only XK1 (90° rotation) is available for flange and trunnion.

Outline drawing

* The port and cushion needle positions remain the same.

● Basic

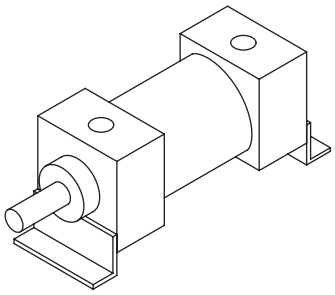

● K1

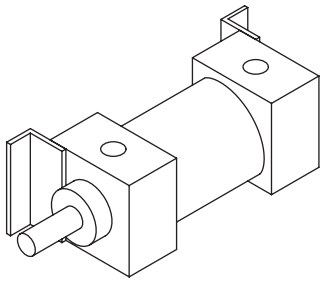

● K2

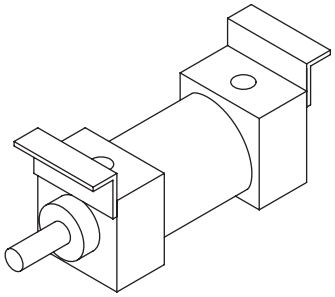

● K3

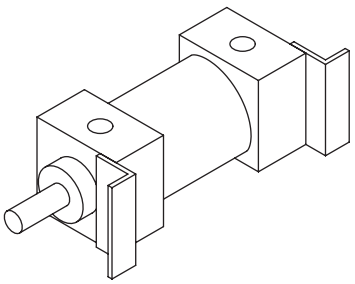

■ Specifying trunnion position (-XAQ**)

Content: Specify the length between the end face of rod cover and the center of trunnion shaft.

How to order

SCA2 - TC - 40 B - 100 - XAQ 130

Model No.

Compatible model

Model No.	Name
SCG	Tie rod cylinder
SCA2	Medium bore size cylinder
SCS2	Large bore size cylinder
CAV2	Cylinder with valve
COV*2	Cylinder with valve
JSG	Tie rod cylinder with brake
JSC3/JSC4	Brake cylinder

Model No.

Refer to How to order for each model.

Made-to-order dimensions

Refer to the dimensions list.

⚠ Precautions for model No. selection

*1: Reference point for cylinder with brake is also the rod cover.
(Note that it is not the brake end face.)
*2: As for the two-stage and back to back, contact CKD separately.

Outline drawing

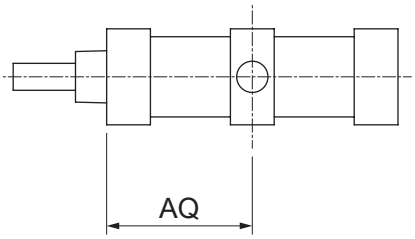

Basic

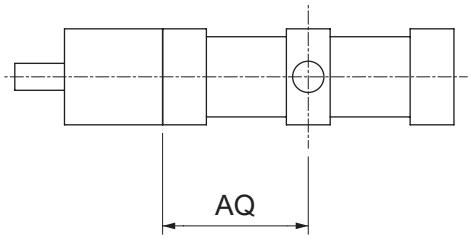

With brake

■ Rod eye pin/clevis pin split pin (-XP5)

Content: Change the snap ring of rod eye pin and clevis pin to the split pin.

How to order

SCA2 - 00 - 40 B - 100 - Y - XP5

Model No.

Compatible model	
Model No.	Name
SCM	Round shaped cylinder
SCA2	Medium bore size cylinder
SCS2	Large bore size cylinder
SSD2	Compact cylinder
SSD	Compact cylinder
JSC3/JSC4	Brake cylinder

Model No.
Refer to How to order for each model.

Outline drawing

● Snap ring

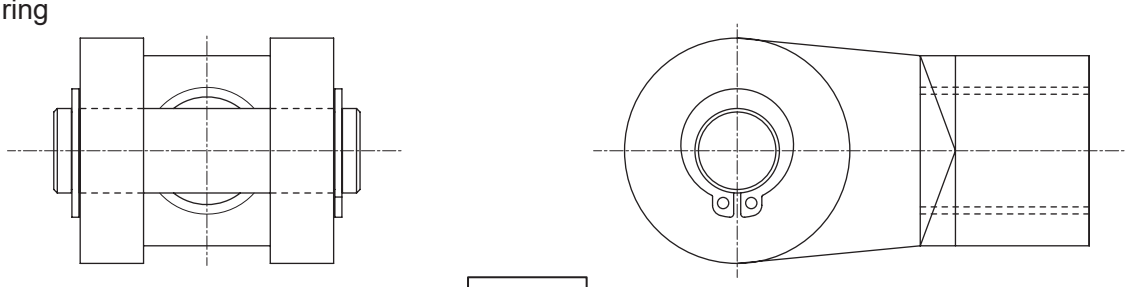

● Split pin

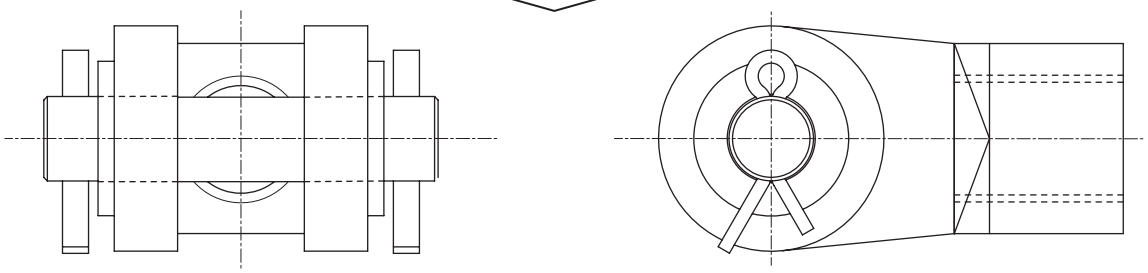

Pin diameter	Split pin size
12	ø4x20
14	ø4x20
20	ø4x25
25	ø4x30
28	ø5x35
32	ø5x40
40	ø5x50
50	ø5x60

■ Fixing rod eye with pin (-XP7)

Description: A spring pin is driven into the rod eye to prevent loosening.

How to order

SCA2 - TC - 40 B - 100 - Y - XP7

Model No.

- XP7-S005: For **SCG** and **JSG**

Compatibility	
Model No.	Name
SCM	Round shaped cylinder
SCG	Tie rod cylinder
SCA2	Medium bore size cylinder
SCS2	Medium bore size cylinder
SSD2	Compact cylinder
SSD	Compact cylinder
JSC3/JSC4	Brake cylinder
JSG	Tie rod cylinder with brake

Model No.
Refer to How to order for each model.

Outline drawing

The dimensions are the same as those of the type with rod eye.
(Spring pin drive-in direction differs depending on the model.)

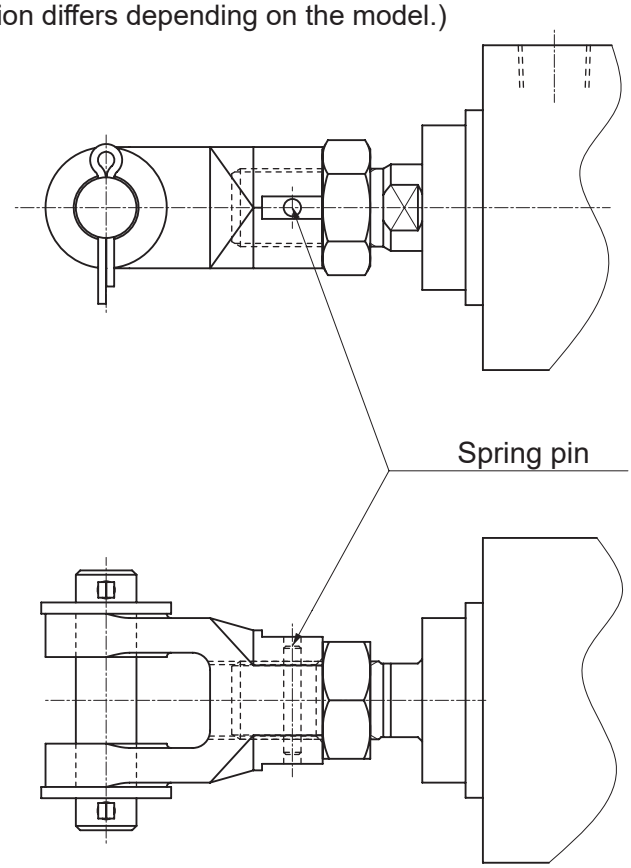

Made-to-order product

■ Rod eye pin/clevis pin split pin specifications, fixing rod eye with pin (-XP8)

Content: Change the snap ring of rod eye pin and clevis pin to the split pin. + A spring pin is driven into the rod eye pin to prevent loosening. (XP5 + XP7)

How to order

SCA2 - 00 - 40 B - 100 - Y - XP8

Model No.

Compatible model	
Model No.	Name
SCM	Round shaped cylinder
SCA2	Medium bore size cylinder
SCS2	Large bore size cylinder
SSD2	Compact cylinder
SSD	Compact cylinder
JSC3/JSC4	Brake cylinder

Model No.
Refer to How to order for each model.

Outline drawing

Ending

The installation dimensions are the same as those of the type with rod eye.

■ Tie rod extension (-XMX*)

Content: Specify the dimensions of projecting section of tie rod thread part.

How to order

SCS2 - LB - 125 B - 100 - XMX 55 *

Model No.

Compatible model	
Model No.	Name
SCS2	Large bore size cylinder

Model No.
Refer to How to order for each model.

Made-to-order dimensions
Refer to the dimensions list.

* Selection of rod side or head side	
Blank	Eight tie rods are extended on rod side and head side
R	Four tie rods are extended on rod side
H	Four tie rods are extended on head side

Outline drawing

● Eight tie rods are extended on rod side and head side (XMX*)

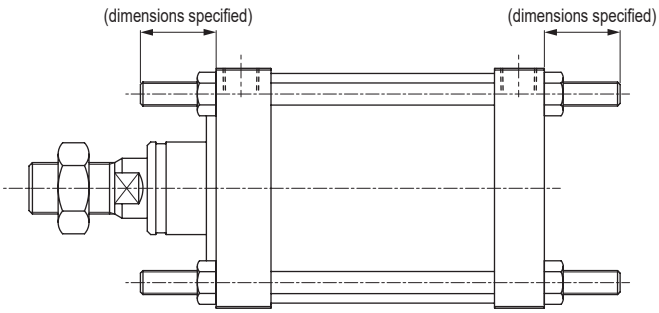

● Four tie rods are extended on rod side (XMX*R)

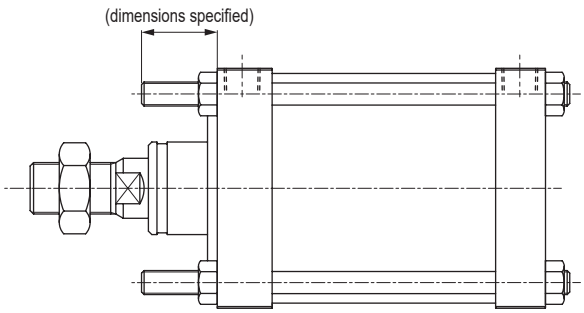

● Four tie rods are extended on head side (XMX*H)

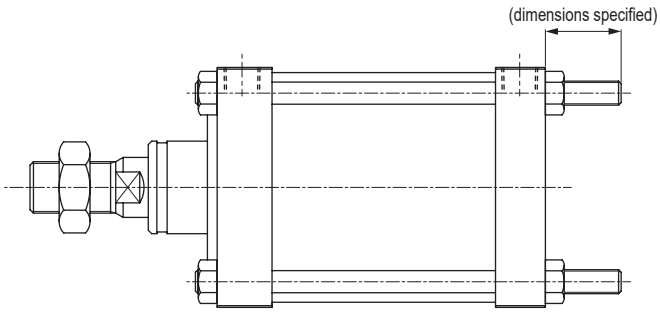

Made-to-order product

■ Tie rod material SUS (-XM1)

Content: Change the tie rod material to stainless steel. (The washer and nut are not changed.)

How to order

SCA2 - 00 - 40 B - 100 - XM1

Model No.

Compatible model	
Model No.	Name
SCA2	Medium bore size cylinder
SCS2	Large bore size cylinder

Model No.
Refer to How to order for each model.

Dimensions

Same as the standard.

■ Without bellows (-XJ9)

Content: Piston rod dimensions the same as those with bellows, without assembling bellows.

How to order

SCA2 - 00 - 40 B - 100 - XJ9

Model No.

Compatible model	
Model No.	Name
CMK2	Medium bore size cylinder
CMA2	Medium bore size cylinder
SCM	Round shaped cylinder
SCG	Tie rod cylinder
SCA2	Medium bore size cylinder
SCS2	Large bore size cylinder
ULK	Brake cylinder
JSK2	Brake cylinder
JSM2	Brake cylinder
JSG	Tie rod cylinder with brake
JSC3/JSC4	Brake cylinder

Model No.
Refer to How to order for each model.

Dimensions

The dimensions are the same as those with bellows but bellows are not attached.

■ Fluoro rubber for scraper/rod packing (-XT9)

Content: Only the rod side packing (rod packing and scraper) is changed to FKM.

How to order

SCA2 - 00 - 40 B - 100 - XT9

Model No.

Compatible model	
Model No.	Name
SCA2	Medium bore size cylinder
SCS2	Large bore size cylinder

Model No.
Refer to How to order for each model.

Dimensions

Same as the standard.

Other custom order products

Packing fluoro (-T2)

Content: Change the rod packing, piston packing and O-rings to FKM. (The cushion packing is not changed.)

How to order

SCA2 - T2 - 00 - 40 B - 100

Model No.

Compatible model	
Model No.	Name
CMK2	Medium bore size cylinder
CMA2	Medium bore size cylinder
SCM	Round shaped cylinder
SCG	Tie rod cylinder
SCA2	Medium bore size cylinder
SCS2	Large bore size cylinder
SSD2	Compact cylinder
SSD	Compact cylinder

Model No.
Refer to How to order for each model.

Outline drawing

Same as the standard.

With 2 rod nuts (-A2)

Content: 2 rod nuts (same as the standard) are included at shipment.

How to order

SCA2 - 00 - 40 B - 100 - A2

SSD - 50 - 50 - NA2

Model No.

Compatible model

* Be sure to insert "N" code if the standard piston rod end form such as SSD and FCD are female threads.

Compatible model	
Model No.	Name
CMK2	Medium bore size cylinder
CMA2	Medium bore size cylinder
SCM	Round shaped cylinder
SCG	Tie rod cylinder
SCA2	Medium bore size cylinder
SCS2	Large bore size cylinder
SSD2	Compact cylinder
SSD	Compact cylinder
FCD	Flat compact cylinder
ULK	Brake cylinder
JSK2	Brake cylinder
JSM2	Brake cylinder
JSG	Tie rod cylinder with brake
JSC3/JSC4	Brake cylinder
USSD	Position locking compact cylinder

Model No.
Refer to How to order for each model.

Outline drawing

The dimensions are the same as those of the standard except that 2 rod nuts are included.

■ Symmetric port position (-O)

Content: Position the port opposite to the standard port position.

How to order

STG - M - 50 - 50 - P6 O

* Insert the code without a hyphen immediately after the option code.

Model No.

Compatible model	
Model No.	Name
STG	Guided cylinder
STS/L	Guided cylinder

Model No.
Refer to How to order for each model.

Outline drawing

The port position is on the opposite side, as below.

● STG

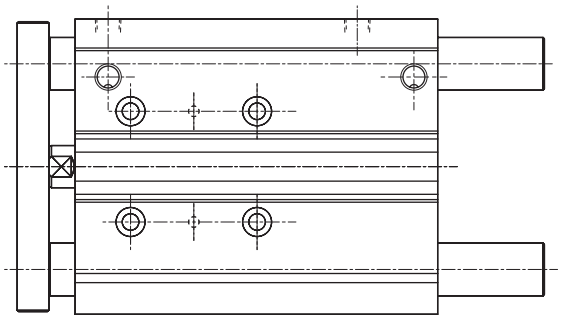

↑ The port of the standard is on this side.

● STS/L

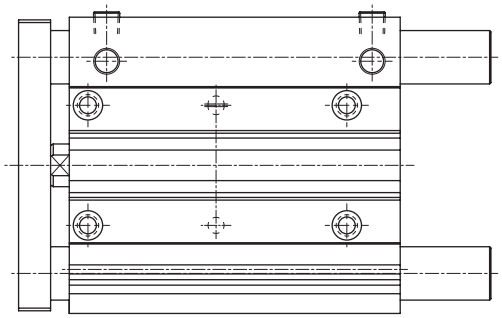

↑ The port of the standard is on this side.

■ Double solenoid (-D)

How to order

CKV2 - D - LB - 20 - 100

Model No.

Compatible model	
Model No.	Name
CKV2	Small cylinder with valve

Model No.
Refer to How to order for each model.

Outline drawing

The dimensions are the same as those of the standard except for the dimensions below.

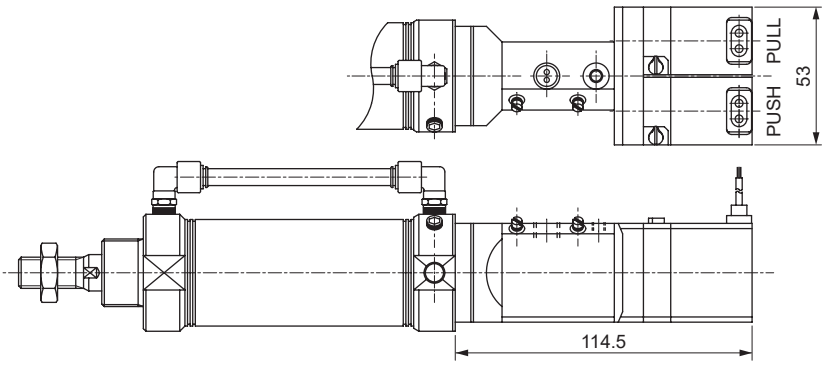

Made-to-order product

■ Low speed (-O)

Content: Low speed (working speed range 10 to 200 mm/S)

How to order

CMK2 - O - 00 - 25 - 50

Model No.

Compatible model	
Model No.	Name
CMK2	Medium bore size cylinder

Model No.
Refer to How to order for each model.

Outline drawing

Same as the standard.

■ With spigot (-R1 and R2)

Content: Spigot is deployed on the cylinder shaft center.

How to order

SSD-L - 32 - 50 - N R1

* Insert the code without a hyphen immediately after the option code.

Model No.

Compatible model	
Model No.	Name
SSD	Compact cylinder

Model No.
Refer to How to order for each model.

With spigot	
R1	With spigot on rod side
R2	With spigot on head side

Outline drawing

● With spigot on rod side (R1)

·ø12, ø16

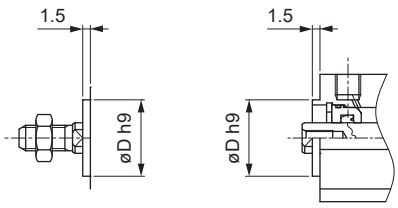

·ø20 to ø100

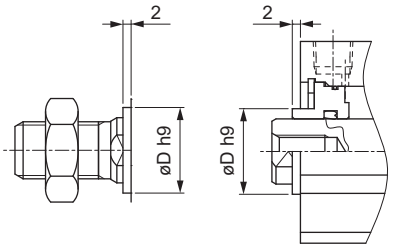

Bore size	øDh9
ø12	15
ø16	20
ø20	13
ø25	15
ø32	21
ø40	28
ø50	35
ø63	35
ø80	43
ø100	59

● With spigot on head side (R2)

·ø12, ø16

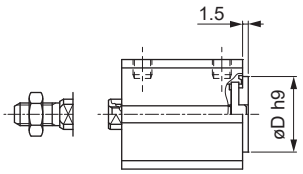

·For SSD-L-12/16-5
SSD-L1-12/16

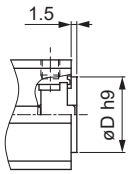

·ø20, ø25

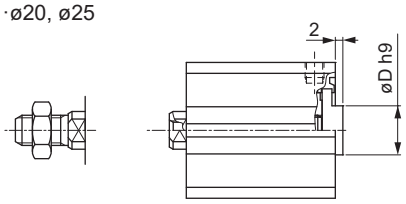

·ø32 to ø100

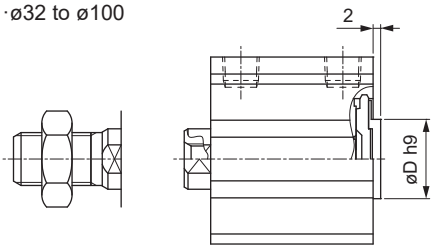

Bore size	øDh9
ø12	15
ø16	20
ø20	13
ø25	15
ø32	21
ø40	28
ø50	35
ø63	35
ø80	43
ø100	59

Introduction of customized products

		Page
Linear guide hand	LHA-**-L1	Ending 112
High gripping power hand	HHC/HHD	Ending 114
High gripping power chuck	CKT/CKU	Ending 114
Magnet suction hand	MHC2	Ending 116
Flexible support	FSB	Ending 118
Free position lock unit	FPL	Ending 120
Ultra low sliding balance cylinder	BBS	Ending 122

Long stroke length has been added to LHA series!!

Long stroke length

Handles common workpieces with **double** stroke.

[mm]

	CS (standard)	CS-L1
LHA-01	5	10
LHA-03	9	18
LHA-04	11	22
LHA-05	15	30
LHA-06	20	40

High rigidity

High precision

Long service life

Uses an **integrated linear guide**.

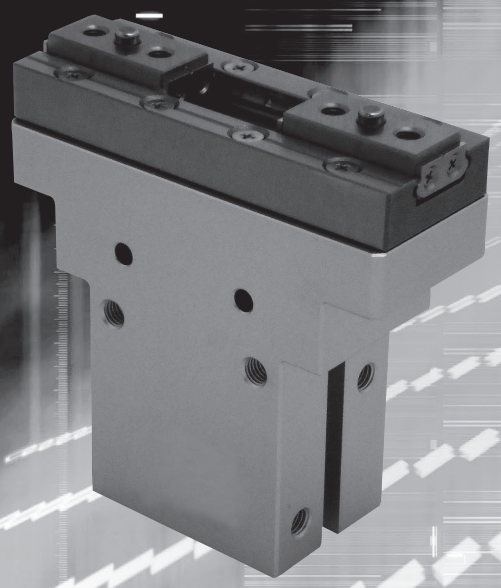

Space saving

Body is **thin**, enabling multiple arrays.

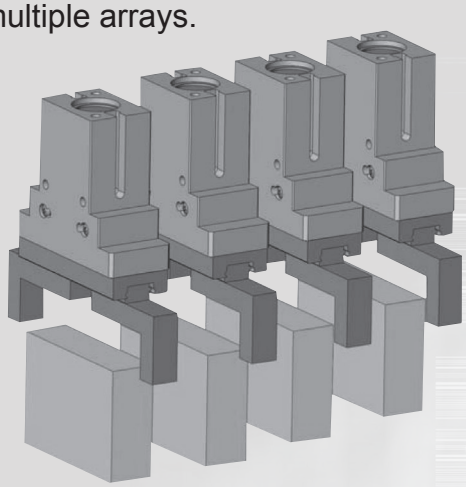

Linear guide hand LHA-**-L1 Series

How to order

LHA - 01CS - L1 - T2H - R

A Long stroke length B C

A Size	B Switch model No.						C Switch quantity	
01CS	Axial lead wire	Radial lead wire	Contact	Lead wire	* Lead wire length		R	1 on open side
03CS							H	1 on closed side
04CS	T2H*	T2V*	Proximity	2-wire	Blank	1 m	D	2
05CS	T3H*	T3V*		3-wire	3	3 m		
06CS					5	5 m		

Note: Contact CKD for rubber cover specifications.

Specifications

Item	LHA-**-L1				
Size	01CS	03CS	04CS	05CS	06CS
Cylinder bore size mm	ø12	ø16	ø20	ø25	ø32
Actuation	Double acting (Note)				
Working fluid	Compressed air				
Max. working pressure MPa	0.7 (≈100 psi, 7 bar)				
Min. working pressure MPa	0.1 (≈15 psi, 1 bar)				
Ambient temperature °C	5 (41°F) to 60 (140°F)				
Port size	M3	M5			
Operating stroke length mm	10	18	22	30	40
Rod diameter mm	ø6	ø8	ø10	ø12	ø16
Repeatability mm	±0.01				
Product weight g	94	190	370	620	970
Lubrication	Not required (use turbine oil class 1 ISO VG32 if necessary for lubrication)				

Note: Single acting: Contact CKD for normally open and normally closed specifications.

Gripping power performance data

The gripping power in the opening/closing directions with jaw length L of hand with a supply pressure of 0.3, 0.5 and 0.7 MPa is shown.

·Open direction (⇦) - - - - - (shown with broken line)
·Closed direction (➡) ——— (shown with continuous line)

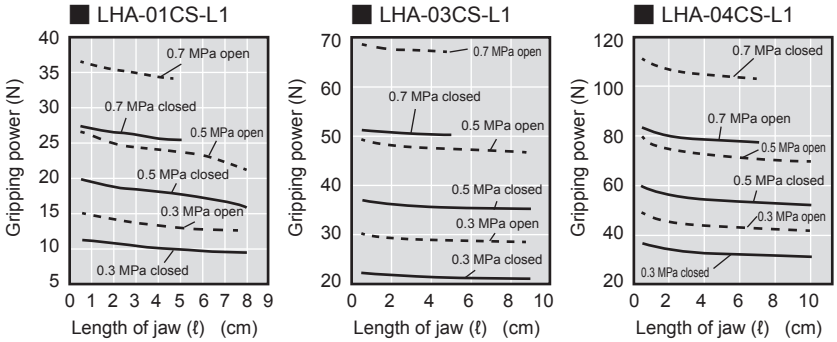

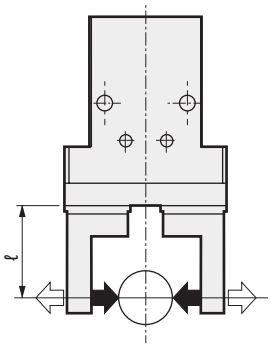

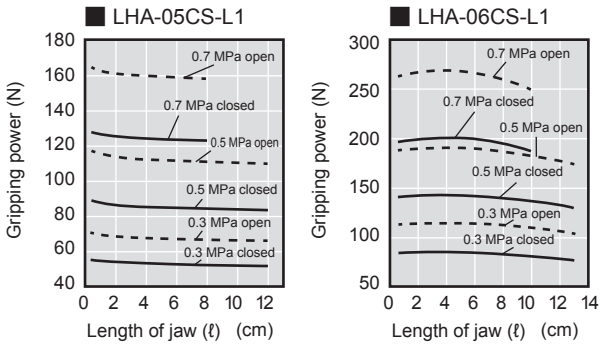

Customized product

Ending

High gripping power hand-chuck

Four new models now added!!

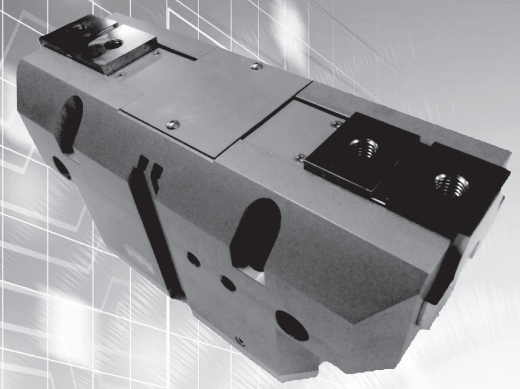

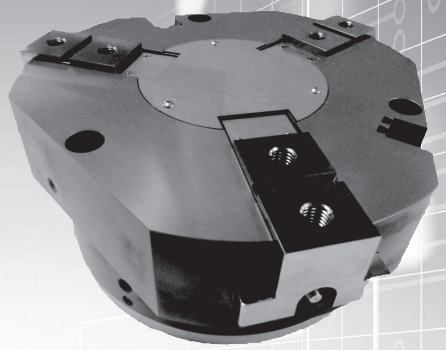

High gripping power hand

- HHC Series - Long stroke length
- HHD Series - High gripping power

Model No.	Gripping power	Stroke length
HHC-160CS	4,200N	70 mm
HHD-160CS	5,333N	40 mm

High gripping power chuck

- CKT Series - Long stroke length
- CKU Series - High gripping power

Model No.	Gripping power	Stroke length
CKT-250CS	5,500N	70 mm
CKU-250CS	8,333N	40 mm

High rigidity — Also compatible with long jaw

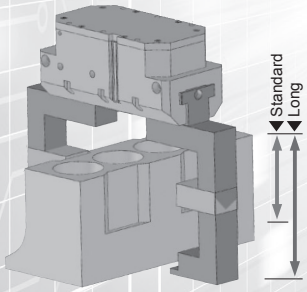

Model No.	Max. jaw length
HHC-160CS	350 mm
HHD-160CS	300 mm

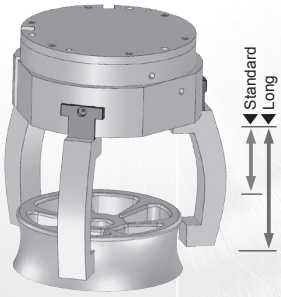

Model No.	Max. jaw length
CKT-160CS	280 mm
CKU-160CS	210 mm

Lightweight — Ultra-lightweight

Downsizing/material optimization

T type switch supported

T type switch is mountable to the switch fixing groove on the body side

- 2-wire/3-wire proximity switch
- Coolant proof switch

High gripping power hand HHC/HHD Series, high gripping power chuck CKT/CKU Series

How to order

HHC - 100CS - T2H - R

Ⓐ Ⓑ Ⓒ Ⓓ

Ⓐ Model	Ⓑ Size	Ⓒ Switch model No. (*1)						Ⓓ Switch quantity	
HHC	100CS	Axial lead wire	Radial lead wire	Contact	Lead wire	* Lead wire length		R	1 on open side
HHD	125CS							H	1 on closed side
CKT	160CS	T2H*	T2V*	Proximity	2-wire	Blank	1 m	D	2
CKU	200CS	T3H*	T3V*		3-wire	3	3 m		
	250CS					5	5 m		

*1: Coolant proof switch is also supported. Contact CKD for details.

Hand specifications

●HHC/HHD

Item	HHC-100CS	HHD-100CS	HHC-125CS	HHD-125CS	HHC-160CS	HHD-160CS
Size	100CS		125CS		160CS	
Cylinder bore size mm	ø91 or equiv.		ø125 or equiv.		ø173 or equiv.	
Actuation	Double acting					
Working fluid	Compressed air					
Max. working pressure MPa	0.7 (≈100 psi, 7 bar)					
Min. working pressure MPa	0.3 (≈44 psi, 3 bar)					
Ambient temperature °C	5 (41°F) to 60 (140°F)					
Port size	Rc1/8				Rc1/4	
Operating stroke length mm	50	28	60	34	70	40
Rod diameter mm	ø30		ø36		ø40	
Theoretical grip (0.5 MPa) N	1400	2200	2100	3150	4200	5333
Width mm	234	224	270	260	314	304
Depth mm	100		115		140	
Height mm	111		126.5		141	
Max. jaw length mm	280	240	320	280	350	300
Repeatability mm	±0.03					
Product weight kg	4.5		7.0		11.5	
Lubrication	Not required (use turbine oil class 1 ISO VG32 if necessary for lubrication)					

● Gripping power performance data

■HHC-100CS

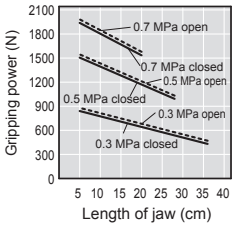

■HHC-125CS

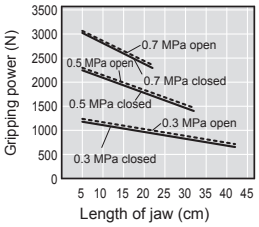

■HHC-160CS

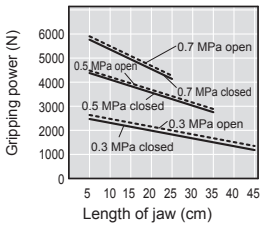

■HHD-100CS

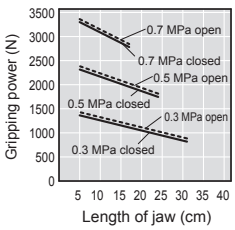

■HHD-125CS

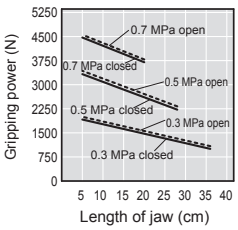

■HHD-160CS

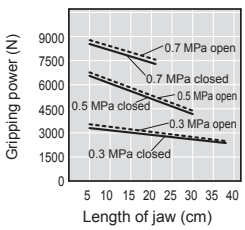

Customized product

Chuck specifications

●CKT/CKU

Item	CKT-160CS	CKU-160CS	CKT-200CS	CKU-200CS	CKT-250CS	CKU-250CS
Size	160CS		200CS		250CS	
Cylinder bore size mm	ø160		ø200		ø250	
Actuation	Double acting					
Working fluid	Compressed air					
Max. working pressure MPa	0.7 (≈100 psi, 7 bar)					
Min. working pressure MPa	0.3 (≈44 psi, 3 bar)					
Ambient temperature °C	5 (41°F) to 60 (140°F)					
Port size	Rc1/8				Rc1/4	
Operating stroke length mm	50	28	60	34	70	40
Rod diameter mm	ø30		ø36		ø40	
Theoretical grip (0.5 MPa) N	2100	3400	3600	5833	5500	8333
O.D. mm	264	250	304	290	344	336
Height mm	109		131		149	
Max. jaw length mm	280	210	270	150	250	150
Repeatability mm	±0.03					
Product weight kg	10		17		27	
Lubrication	Not required (use turbine oil class 1 ISO VG32 if necessary for lubrication)					

● Gripping power performance data

■CKT-160CS

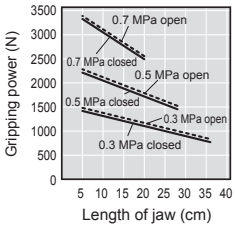

■CKT-200CS

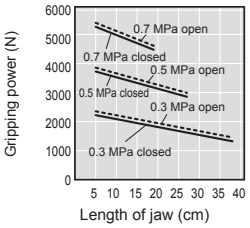

■CKT-250CS

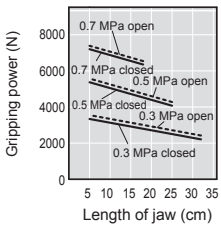

■CKU-160CS

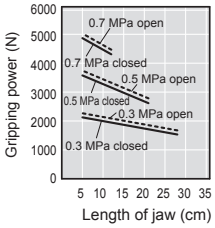

■CKU-200CS

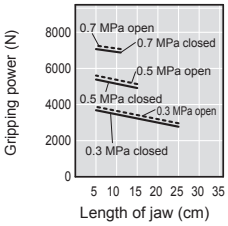

■CKU-250CS

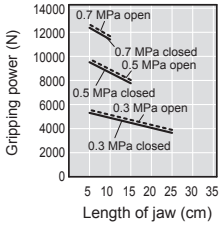

Ending

Gripped by magnetic force.

Unlike the conventional vacuum suction method,

it is a new type of hand

that adsorbs the workpiece by magnetic force.

Variation

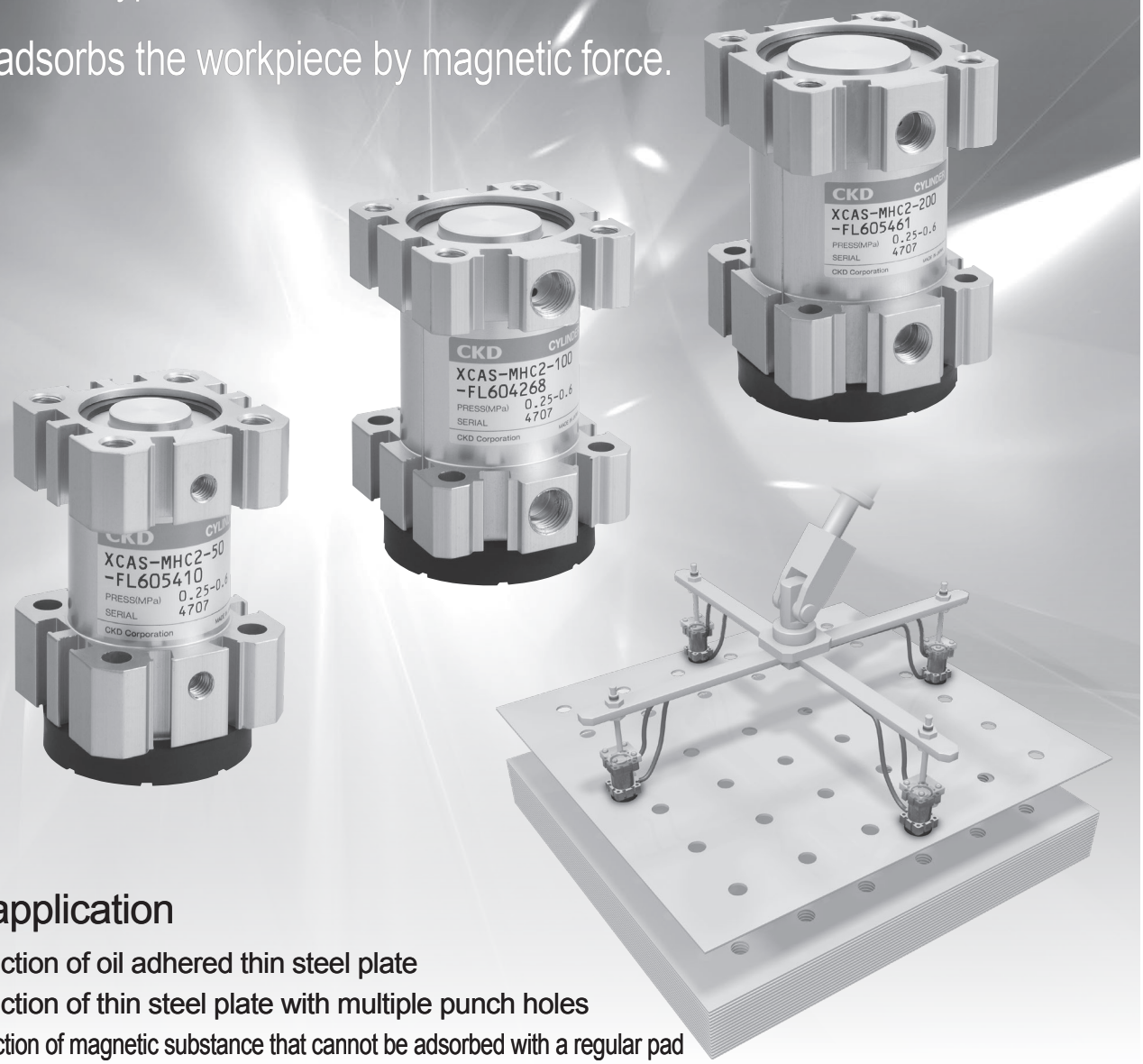

Ending

By application

- Suction of oil adhered thin steel plate
- Suction of thin steel plate with multiple punch holes
- Suction of magnetic substance that cannot be adsorbed with a regular pad

Magnet suction hand MHC2 Series

Secure suction of oil adhered steel plate or steel plate with punch holes.

Improved by significantly reducing product weight.

- Three types of suction force, 50, 100 and 200 N.
- No air consumption when held with suction, energy saving as compared to general vacuum pads.
- Equipped as standard with suction workpiece anti-slip rubber.

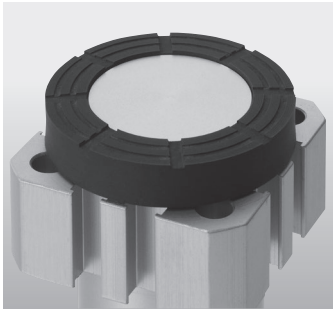

* MHC2 Series Anti-slip part

Main specifications

1 MPa ≈ 145.0 psi, 1 MPa = 10 bar, °F = 9/5°C + 32

Item	MHC2-50	MHC2-100	MHC2-200
Working fluid	Compressed air		
Actuation	Double acting		
Max. working pressure (MPa)	0.6 MPa		
Min. working pressure (MPa)	0.25 MPa		
Proof pressure (MPa)	0.9 MPa		
Ambient temperature (°C)	-5°C to 60°C (no freezing)		
Port size	M5	Rc1/8	
Suction force (N) Note 1	50	100	200
Residual suction force (N)	1 or less		
Product weight (g)	170	240	440

Note 1: The ability to hold a static vertical load. Note that the safety factor has not been taken into consideration.

Comparison of options

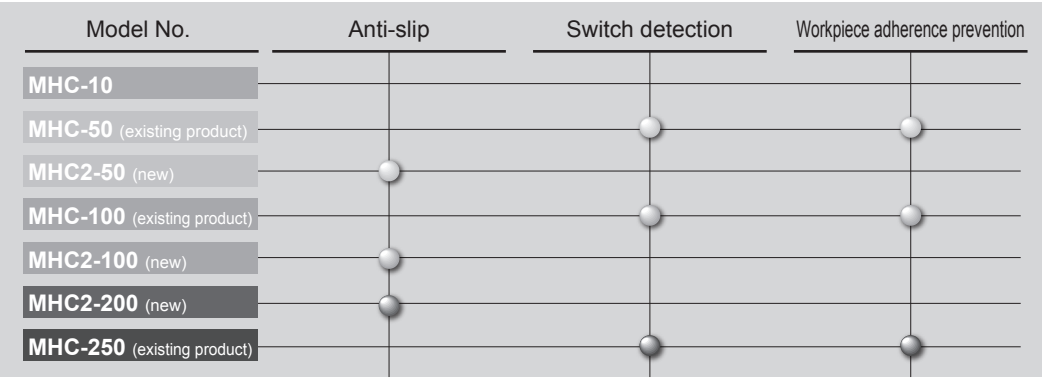

* For an overview of the MHC Series, refer to the Techno Report (CC-974).

- Take care with the working environment, as a strong magnet is built in.
- The suction force is the force that can hold a static load in the vertical direction.
  - ·Suction force may not meet specifications if the product is used in a horizontally mounted (horizontal mounting) state and at an angle.
  - ·Suction force may not be achieved when impact and vibration are applied and also when moment load is applied.
- Suction force may not be achieved depending on the thickness and size of the workpiece.
- Suction force is reduced by up to 20% if ambient temperature or workpiece temperature is 60°C or more.

Just put the workpiece there.

Flexible support FSB Series

Features

- Molds itself to the shape of any workpiece for holding.
- Changeover is easy even with different workpiece shapes.
- Also usable as a robot hand.

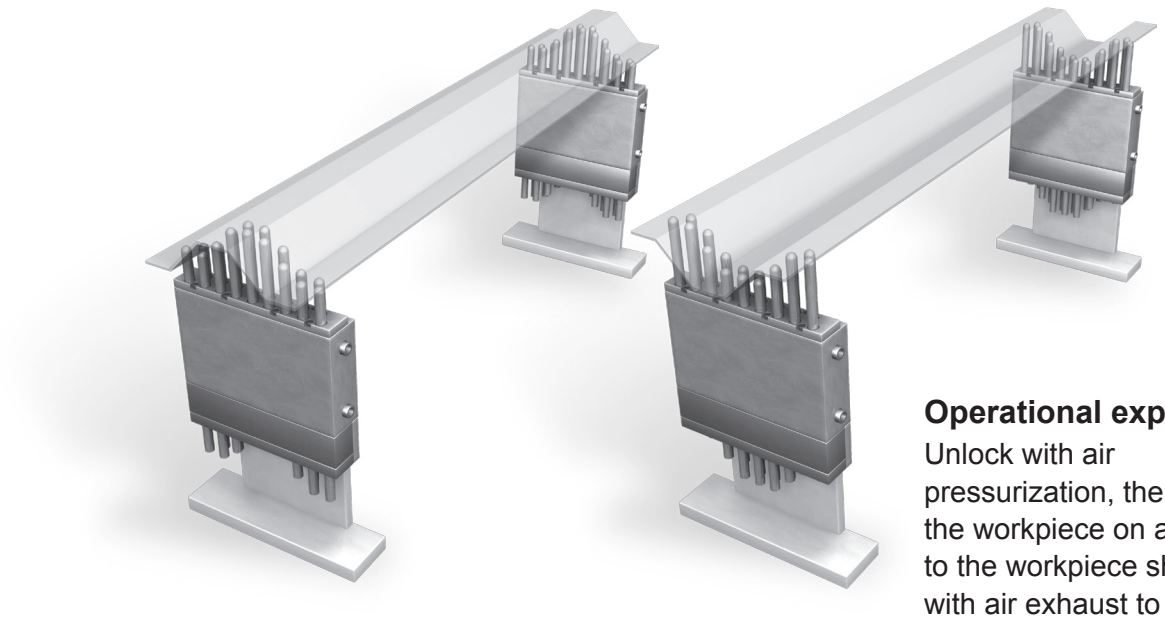

Operational explanation

Unlock with air pressurization, then press the workpiece on and mold it to the workpiece shape. Lock with air exhaust to hold the shape.

Dimensions

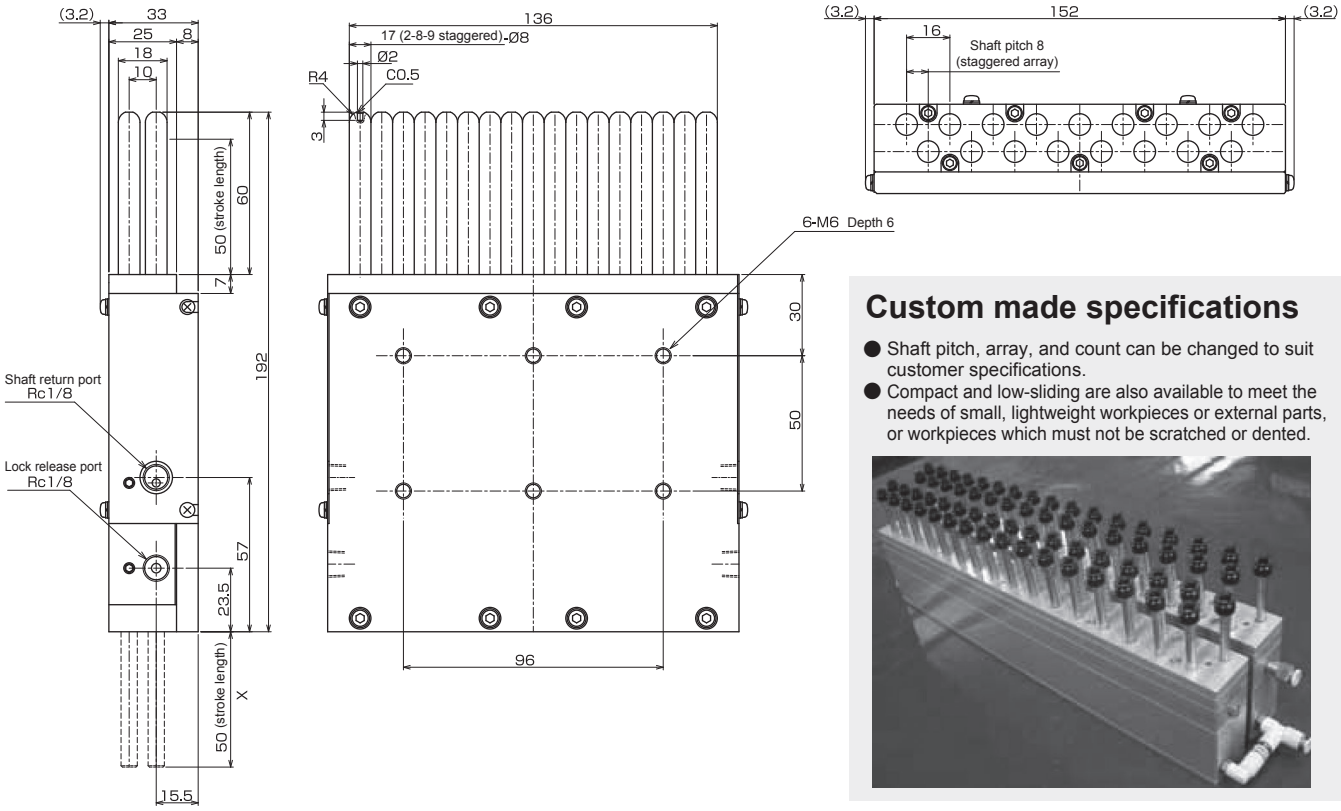

Custom made specifications

- Shaft pitch, array, and count can be changed to suit customer specifications.
- Compact and low-sliding are also available to meet the needs of small, lightweight workpieces or external parts, or workpieces which must not be scratched or dented.

Just let it take shape

Just press on the mating surface for parallel adjustment.

Proprietary locking mechanism holds the angle.

Free position lock unit FPL Series

Features

- Dedicated jig is no longer required.
- Molds to the workpiece shape and holds it. (tilt direction)
- Lock releases with air pressurization. Safety structure locks with air exhaust.
- Holds workpiece up to ±20° range.

1. Pressurize air to release lock. The molding surface slides freely.

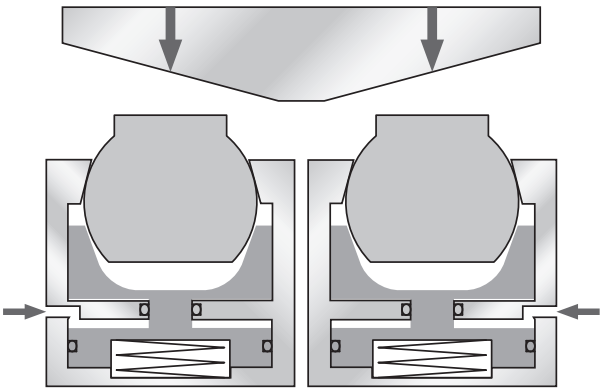

2. Press the workpiece on. The surface molds to the tilted surface.

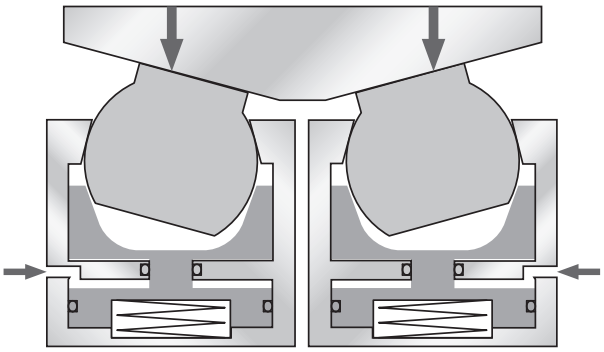

3. Exhaust air to lock. Molds to the workpiece tilt surface and holds the current position.

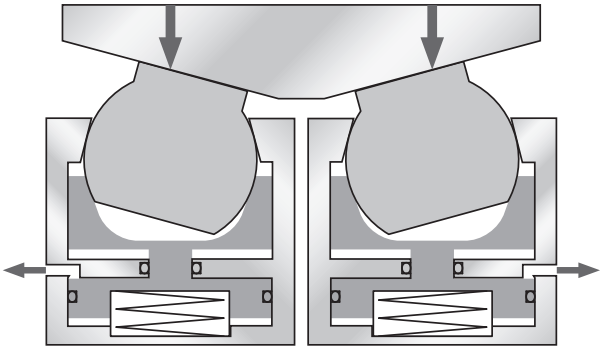

4. Because the position is held, readjustment is not required as long as it uses the same workpiece.

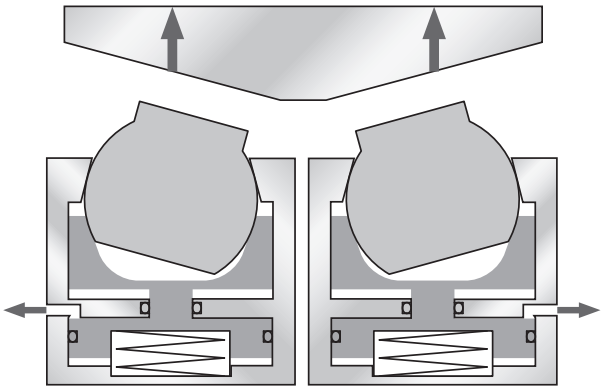

Light as a feather

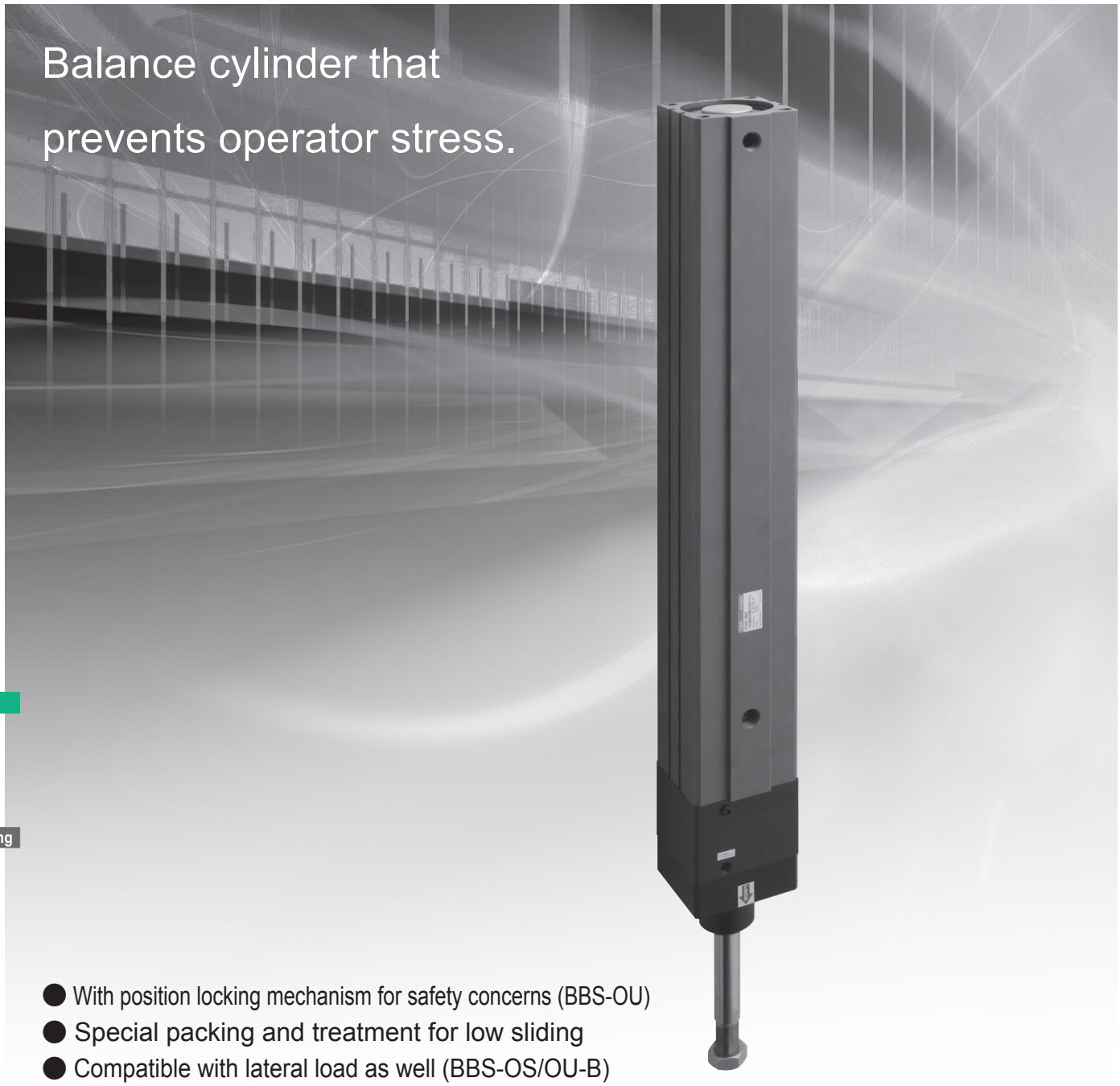

Ultra low sliding balance cylinder BBS Series

Applications

● Conveyance of heavy objects

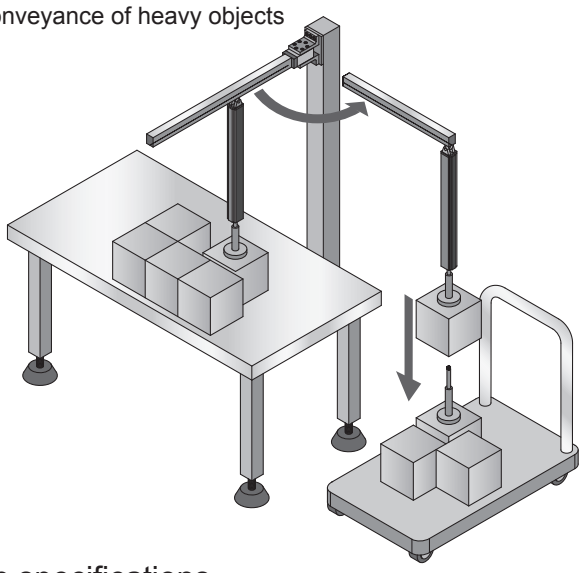

● Electric linear actuator weight assistance

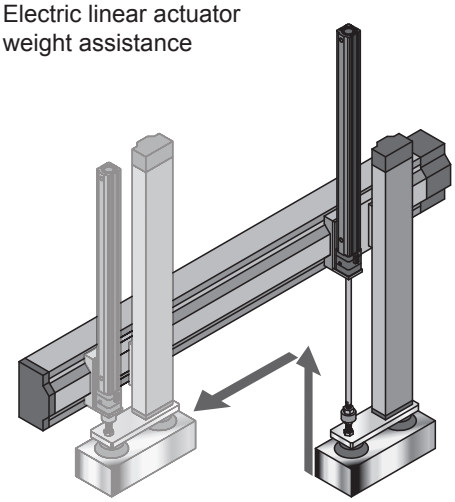

Main specifications

1 MPa ≈ 145.0 psi, 1 MPa = 10 bar, °F = 9/5°C + 32

Item		BBS-OS/BBS-OU			
		32	40	50	63
Working fluid		Clean compressed air			
Max. working pressure (MPa)		1.0 (BBS-OS), 0.6 (BBS-OU)			
Min. working pressure (MPa)	Cylinder	0.05			
	Lock	0.25 (BBS-OU only)			
Proof pressure (MPa)		1.5 (BBS-OS), 0.9 (BBS-OU)			
Ambient temperature (°C)		5°C to 60°C (no freezing)			
Bore size (mm)		ø32	ø40	ø50	ø63
Port size		Rc1/8	Rc1/4	Rc1/4	Rc3/8
Max. stroke length (mm)		500			ø
Working piston speed (mm/s)		1 to 1,000 (Operate within the allowable absorbed energy.)			
Cushion *1		Rubber cushion			
Lubrication		Not advisable			
Max. load (kg) *2	BBS-OS	49	76	120	190
	BBS-OU	29	46	72	114
Holding force (N) (BBS-OU only)		588	588	980	1470
No-load sliding resistance (N) *3		10 or less			

*1: Depending on the type, the allowable absorbed energy varies.
*2: Differs according to the pressurizing direction and working pressure.
*3: Indicates the load at which the piston rod operates with no load and atmospheric release.

Systems

Product guide

	Page
Components for clean room specifications	Ending 126
Fine speed cylinder	Ending 128
Low friction cylinder	Ending 128
Electric actuator	Ending 129
Small direct mounting cylinder	Ending 130
Stopper cylinder	Ending 130
Lifter cylinder	Ending 131
Fine speed fan rotary actuator	Ending 131
Oil-prohibited cylinder (SCA2-P12, JSC3-P12, SSD-K-P12)	Ending 132
Booster (B)	Ending 134
Air hydraulic booster (AHB)	Ending 134
CELLCON cylinder/CELLCON hydraulic cylinder	Ending 135

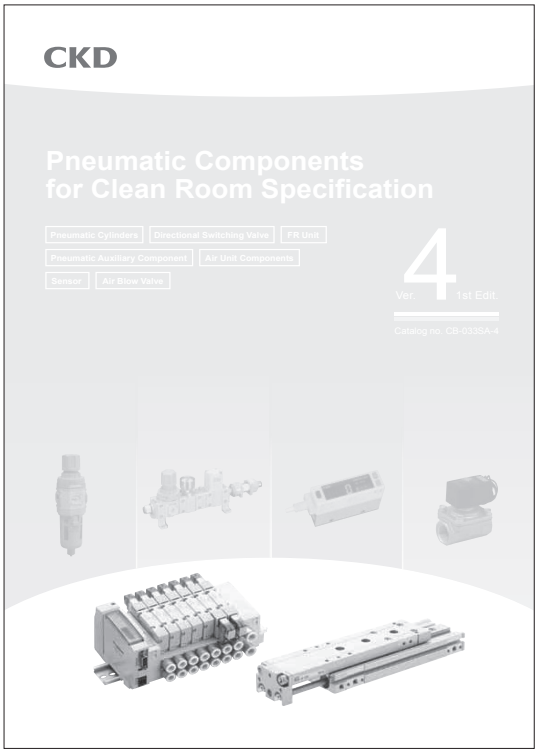

Components for clean room specifications

Catalog No.CB-033SA

Satisfies the various levels of clean room cleanliness in a wide range of industries

● Reliably producing high cleanliness air

Clean blow system model circuit

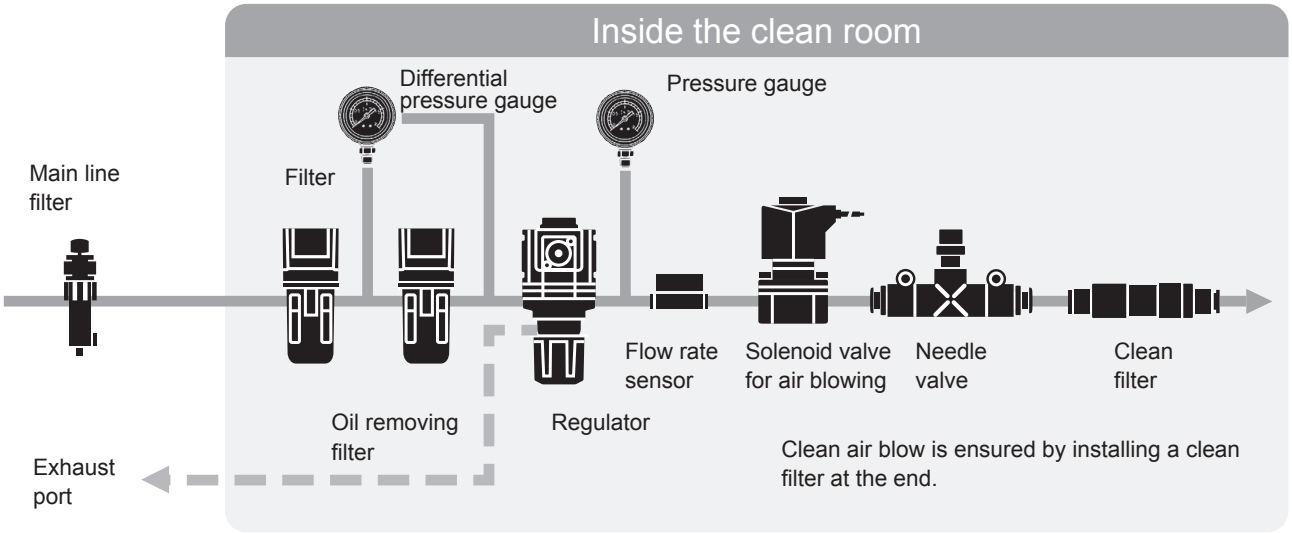

Zero particle generation with vacuum treatment and exhaust port

Air-driven actuator system circuit structure

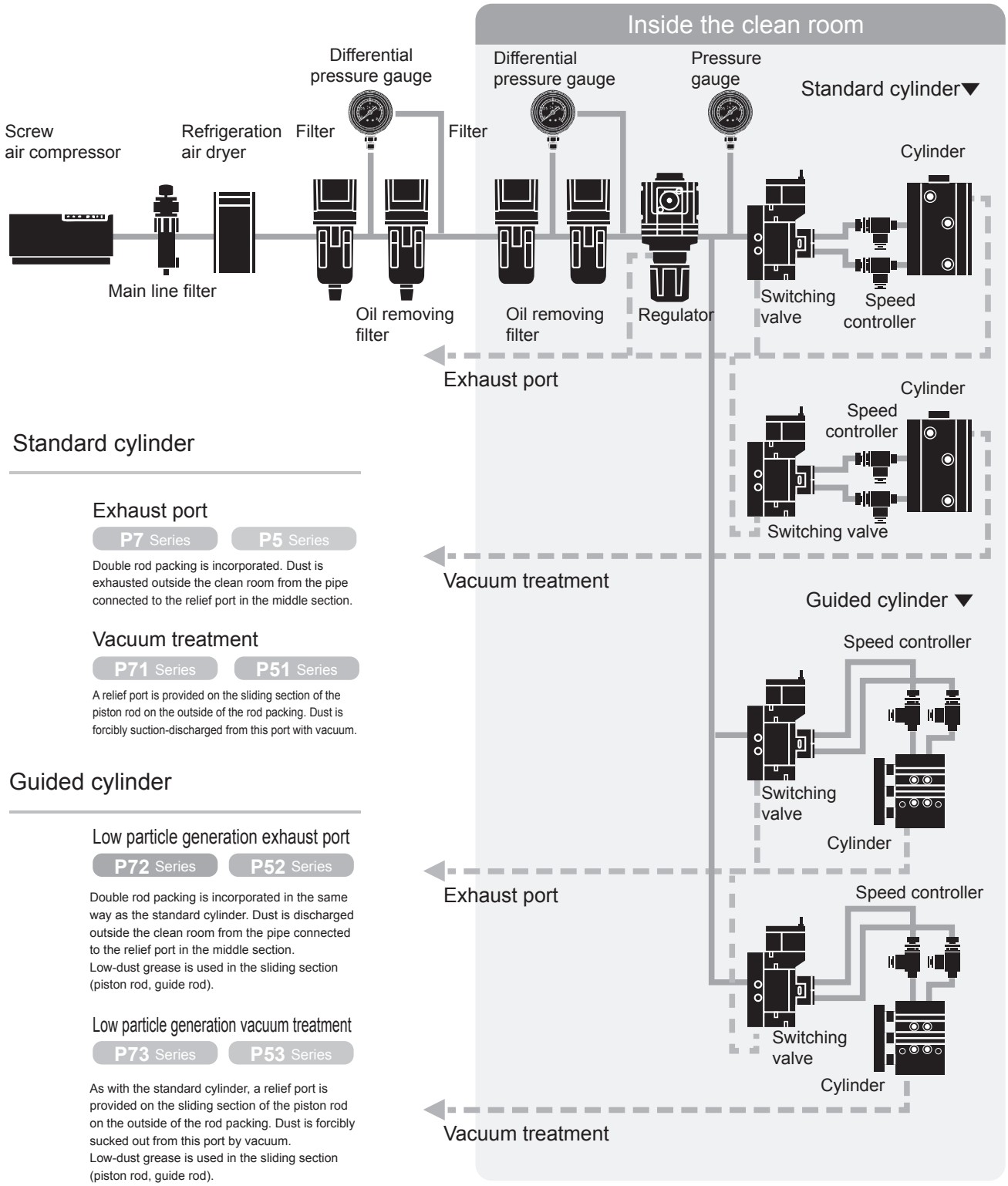

Standard cylinder

Exhaust port

P7 Series P5 Series

Double rod packing is incorporated. Dust is exhausted outside the clean room from the pipe connected to the relief port in the middle section.

Vacuum treatment

P71 Series P51 Series

A relief port is provided on the sliding section of the piston rod on the outside of the rod packing. Dust is forcibly suction-discharged from this port with vacuum.

Guided cylinder

Low particle generation exhaust port

P72 Series P52 Series

Double rod packing is incorporated in the same way as the standard cylinder. Dust is discharged outside the clean room from the pipe connected to the relief port in the middle section.
Low-dust grease is used in the sliding section (piston rod, guide rod).

Low particle generation vacuum treatment

P73 Series P53 Series

As with the standard cylinder, a relief port is provided on the sliding section of the piston rod on the outside of the rod packing. Dust is forcibly sucked out from this port by vacuum.
Low-dust grease is used in the sliding section (piston rod, guide rod).

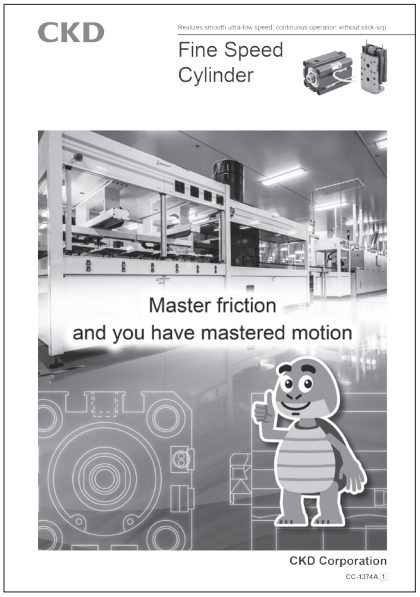

Realizes smooth low speed operation without stick-slip

Fine speed cylinder

Catalog No.CC-1374A

- Can be driven at ultra low speeds down to 1 mm/s
- Easy startups after long shutdowns
- Stable push pressure
- Prevents unexplained stoppages
- Same dimensions as standard model No. products
- Diverse lineup from small bore sizes up

Low sliding resistance

Low friction cylinder

Catalog No. CC-620

- Follows pressure fluctuation closely
- Starts at 0.03 MPa pressure
- Stable even at 10 mm/s
- Various models and sizes are available
- Various switches are mountable

Electric actuator EBS/EBR Series
Controller ECR/ECG Series

Catalog No. CC-1422A

- Slider EBS-M Series
  For high-speed transport
- Rod with built-in guide EBR-M Series
  For press fitting and hoisting
- Controller ECR, ECG Series
  A new ONE controller system for every actuator model and size

Electric actuator FLSH/FLCR/FGRC Series
Controller ECR series

Catalog No. CC-1444A

- 2-Finger Gripper FLSH Series
  For soft handling of multi-model workpieces
- Table type FLCR Series
  For short-stroke workpiece transport and positioning
- Rotary FGRC Series
  For indexing operation and workpiece inversion
- Controller ECR Series
  "One controller" that connects to any actuator

Wide-range lineup of motorless electric actuators

Electric actuator motorless general

Catalog No. CB-055A

- Slider

For high speed transport	EBS-L Series
For high load transport	ETS/ECS Series
For long stroke transport	ETV/ECV Series
For fast tact transport	EKS-L Series

- Rod

For press fitting and hoisting	EBR-L Series

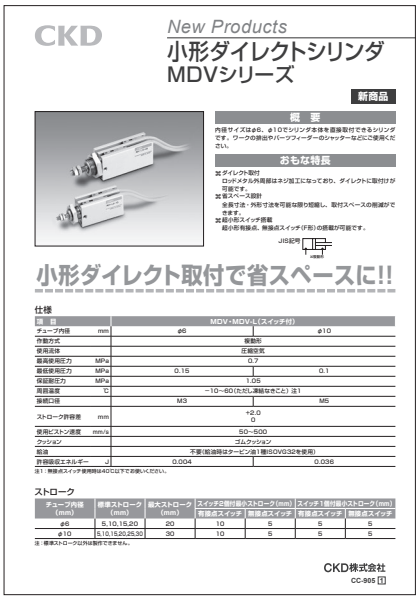

CKD

New Products

小形ダイレクトシリンダ
MDVシリーズ

新商品

概　要

内径サイズはφ6、φ10でシリンダ本体を直接取付できるシリンダです。ワークの排出やパーツフィーダーのシャッターなどにご使用ください。

おもな特長

☒ダイレクト取付
ロッドメタル外周部はネジ加工になっており、ダイレクトに取付けが可能です。

☒省スペース設計
全長寸法・外形寸法を可能な限り短縮し、取付スペースの削減ができます。

☒超小形スイッチ搭載
超小形有接点、無接点スイッチ(F形)の搭載が可能です。

JIS記号

小形ダイレクト取付で省スペースに!!

仕様

項目		MDV・MDV-L(スイッチ付)	
チューブ内径	mm	φ6	φ10
作動方式		複動形	
使用流体		圧縮空気	
最高使用圧力	MPa	0.7	
最低使用圧力	MPa	0.15	0.1
保証耐圧力	MPa	1.05	
周囲温度	℃	−10～60(ただし凍結なきこと) 注1	
接続口径		M3	M5
ストローク許容差	mm	+2.0 0	
使用ピストン速度	mm/s	50～500	
クッション		ゴムクッション	
給油		不要(給油時はタービン油1種ISOVG32を使用)	
許容吸収エネルギー	J	0.004	0.036

注1：無接点スイッチ使用時は40℃以下でお使いください。

ストローク

チューブ内径(mm)	標準ストローク(mm)	最大ストローク(mm)	スイッチ2個付動作のストローク(mm)		スイッチ1個付動作ストローク(mm)	
			有接点スイッチ	無接点スイッチ	有接点スイッチ	無接点スイッチ
φ6	5,10,15,20	20	10	5	5	5
φ10	5,10,15,20,25,30	30	10	5	5	5

注：標準ストローク以外は製作できません。

CKD株式会社
CC-905 [1]

Small direct mounting cylinder MDV Series

Catalog No. CC-905

- Rod metal rim is threaded for direct installation.
- Total length dimension and outside dimension are minimized to reduce installation space.
- Miniature switch equipped

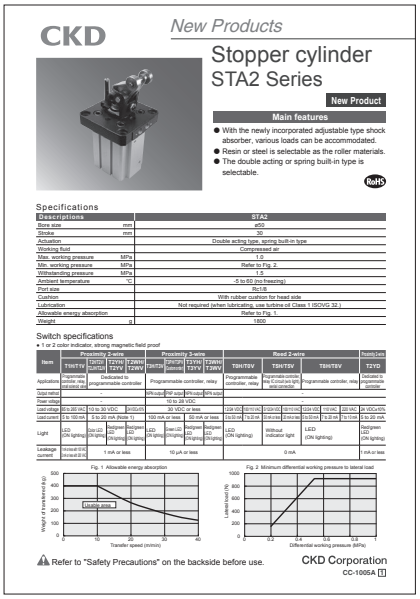

CKD

New Products

Stopper cylinder
STA2 Series

New Product

Main features

- With the newly incorporated adjustable type shock absorber, various loads can be accommodated.
- Resin or steel is selectable as the roller materials.
- The double acting or spring built-in type is selectable.

RoHS

Specifications

Descriptions		STA2
Bore size	mm	φ50
Stroke	mm	30
Actuation		Double acting type, spring built-in type
Working fluid		Compressed air
Max. working pressure	MPa	1.0
Min. working pressure	MPa	Refer to Fig. 2
Withstanding pressure	MPa	1.5
Ambient temperature	℃	-5 to 60 (no freezing)
Port size		Rc1/8
Cushion		With rubber cushion for head side
Lubrication		Not required (when lubricating, use turbine oil Class 1 ISOVG 32.)
Allowable energy absorption		Refer to Fig. 1.
Weight	g	1800

Switch specifications

● 1 or 2 color indicator, strong magnetic field proof

Item	Proximity 2-wire				Proximity 3-wire				Reed 2-wire								Solid 2-wire
	T1H/T1V	T2H/T2H-A93V	T2YH/T2YV	T2WH/T2WV	T2H/T2H-Sakaki	T2YH/T2YV	T2WH/T2WV	T0H/T0V	T5H/T5V		T8H/T8V						T2YD
Applications	Programmable controller, relay and solenoid valve		Dedicated to programmable controller		Programmable controller, relay			Programmable controller, relay	Programmable controller, Consoleless light, relay controller		Programmable controller, relay						Dedicated to programmable controller
Output method	-				NPN output	PNP output	NPN output	NPN output									
Power voltage	-				10 to 28 VDC												
Load voltage	80 to 265 VAC	10 to 30 VDC		30 VDC				30 VDC or less	12/24 VDC	100/110 VAC	12/24 VDC	100/110 VAC	12/24 VDC	110 VAC	220 VAC	24 VDC±10%	
Load current	5 to 100 mA	5 to 20 mA (Note 1)			100 mA or less		50 mA or less		4 to 20 mA	7 to 20 mA	5 to 20 mA	5 to 20 mA	5 to 20 mA	7 to 15 mA	7 to 15 mA	4 to 20 mA	
Light	LED (ON lighting)	Red LED (ON lighting)	Red/green LED (ON lighting)	Red/green LED (ON lighting)	LED (ON lighting)	Green LED (ON lighting)	Red/green LED (ON lighting)	Red/green LED (ON lighting)	LED (ON lighting)		Without indicator light	LED (ON lighting)					Red/green LED (ON lighting)
Leakage current	Increase 0.8 mA or less		1 mA or less		10 μA or less				0 mA								1 mA or less

Fig. 1 Allowable energy absorption

Fig. 2 Minimum differential working pressure to lateral load

⚠ Refer to "Safety Precautions" on the backside before use.

CKD Corporation
CC-1005A [1]

Stopper cylinder STA2 Series

Catalog No. CC-1005A

- Adjustable shock absorber is adopted to support various loads.
- Select either resin or steel for roller material
- Select either double acting or double acting spring integrated for actuation

Ending

Lifter cylinder
LFC-KL Series

Catalog No. CC-902

- Allowable eccentric load and allowable torque improved
- Rubber air cushion to effectively reduce the impact noise and collision acceleration at stroke end is equipped as standard
- Improved usability with a large table surface CKD direct drive actuator ABSODEX Series can be mounted.

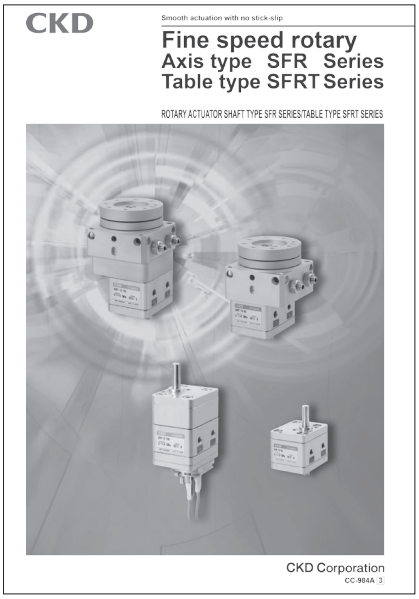

Fine speed fan rotary actuator
Shaft SFR Series
Table SFRT Series

Catalog No. CC-984A

- Original seal structure realizes the industry's smallest air leak
- Operation is possible with various speeds ranging from low speed to high speeds
- Table (SFRT) and shaft (SFR) are available
- Compact, lightweight and high torque
- Multisurface installation for all installation places

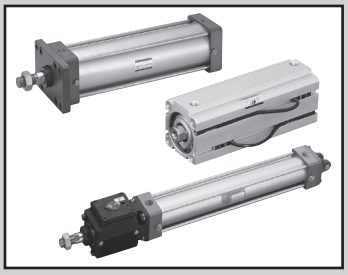

Oil-prohibited cylinder

Medium bore size cylinder SCA2-P12
Brake cylinder JSC3-P12
Compact cylinder SSD-K-P12

Eliminate grease splatter!

RoHS

Overview

Oil-prohibited cylinder is suitable for use in painting lines where oil could cause painting faults, such as uneven colors, or in environments such as food manufacturing lines where splattered grease could cause problems.

Features

- Uses medicated white Vaseline.
  Non-polluting medicated white Vaseline is used.
- Uses solid lubricant bearing.
  Instead of typical oil-impregnated bearings, solid lubricant bearings that do not contain oil are used.

1 MPa ≈ 145.0 psi, 1 MPa = 10 bar

● Oil-prohibited cylinder

Model No.	Actuation	Bore size mm	Standard stroke length mm	Mounting	Cushion	Port size Rc	Max. working pressure MPa	Min. working pressure MPa
SCA2-P12 JSC3-P12	Double acting	40	50, 75, 100 150, 200, 250, 300, 350, 400, 450, 500	Basic 00 Axial foot LB Rod side flange FA Head side flange FB Head side special flange FC Eye bracket CA Clevis bracket CB Intermediate trunnion TC Rod side trunnion TA Head side trunnion TB	With or without air cushion can be selected	1/4	1.0 (≈150 psi, 10 bar)	SCA2:0.05 JSC3 Cylinder section: 0.1 Brake section: 0.3
		50				3/8		
		63						
		80				1/2		
		100						
SSD-K-P12	Double acting high load	40	10, 15, 20, 25, 30, 40, 50, 60, 70, 80, 90, 100	Axial foot LB Clevis bracket CB	Rubber cushion	1/8	1.0 (≈150 psi, 10 bar)	1.0 (≈150 psi, 10 bar)
		50				1/4		
		63	10, 20, 30, 40, 50, 60, 70, 80, 90, 100					0.05 (≈7.3 psi, 0.5 bar)
		80				3/8		
		100						

Ending

[How to order]

* For details on model numbers, refer to SCA2 Series: page 450 (Pneumatic Cylinders I), JSC3 Series: page 774 (Pneumatic Cylinders II), and SSD-K Series: page 1116 (Pneumatic Cylinders I).

[Medium bore size cylinder SCA2 Series]

Without switch

SCA2 - LB - 40 B - 200 ——— J P12 I

With switch

SCA2 - LB - 40 B - 200 - T0H - R - J P12 I

- SCA2: Model No.
- LB: A Mounting
- 40: B Bore size
- B: C Cushion
- 200: D Stroke length
- T0H: E Switch model No.
- R: F Switch quantity
- J: G Option
- P12: Oil-prohibited specifications
- I: H Accessory

[Brake cylinder JSC3 Series]

Without switch

JSC3 - LB - 40 B - 200 ——— J P12 I

With switch

JSC3 - LB - 40 B - 200 - T0H - R - J P12 I

- JSC3: Model No.
- LB: A Mounting
- 40: B Bore size
- B: C Cushion
- 200: D Stroke length
- T0H: E Switch model No.
- R: F Switch quantity
- J: G Option
- P12: Oil-prohibited specifications
- I: H Accessory

[Compact cylinder high load SSD-K Series]

Without switch

SSD-K - 40 - 50 ——— N P12

With switch

SSD-KL - 40 - 50 - T0H - R - N P12

- SSD-KL: Model No.
- 40: A Bore size
- 50: B Stroke length
- T0H: C Switch model No.
- R: D Switch quantity
- N: E Option
- P12: Oil-prohibited specifications

1 MPa ≈ 145.0 psi, 1 MPa = 10 bar

● Booster (high hydraulic pressures can be achieved by pneumatic pressure alone)

Model No.	Bore size mm	Pneumatic tube port size Rc	Boosting ratio	Generated pressure when 0.5 MPa	Oil discharging capacity cc	Hydraulic piping port size Rc	Cushion
B- 80-11	100	1/2	11.0	55	80	1/4	None
B-120-25	160		25.8	128	120		
B-160-25	160		25.8	128	160		

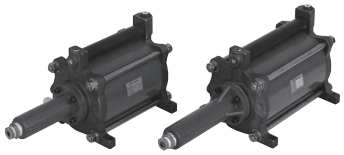

● B Series

RoHS

1 MPa ≈ 145.0 psi, 1 MPa = 10 bar

● Air hydraulic booster

Model No.	Bore size mm	Max. working pressure MPa	Min. working pressure MPa	Boosting ratio	Generated hydraulic pressure (0.5 MPa) MPa	Rapid feed discharge cm^3 (min to max)	High pressure discharge cm^3 (min to max)
AHB	50	1.0 (≈150 psi, 10 bar)	0.2 (≈29 psi, 2 bar)	1:13	65	90 to 360	7 to 28
				1:25	125	94 to 366	3.5 to 14
	100			1:4	20	294 to 1,176	95 to 380
				1:16	80	370 to 1,480	22 to 88
				1:30	150		11 to 44
	160			1:4	20	750 to 3,000	240 to 960
				1:16	80	940 to 3,760	60 to 240
				1:28	140	950 to 3,800	33 to 132

RoHS

Overview

The air hydraulic booster is a power device that uses a booster containing hydraulic fluid to convert the air pressure drive source to several times or several ten times larger hydraulics. Its two-step discharge capability is especially useful, enabling rapid feed discharge of large oil volume at low pressure and high pressure discharge of low oil volume at high pressure. Stamping, caulking, pressing and similar work requiring high hydraulic pressure can be automated with a pneumatic source at low cost.

Features

- Convert pneumatic pressure to high hydraulics
  High hydraulic pressures can be achieved by pneumatic pressure alone.
- Continuous pressure adjustment
  Hydraulic pressure can be adjusted continuously by adjusting pneumatic pressure.
- Constant oil temperature
  Oil temperature does not rise and stable actuation is ensured.
- Switching between rapid feed and high pressure feed
  Two-step discharge switching between rapid feed and high pressure feed can easily be performed with the air switching valve.
- Low air consumption
  Air consumption for a specific output is 1/8 of that of conventional types.

● CELLCON cylinder/CELLCON hydraulic cylinder

Model No.	Actuation	Bore size mm	Standard stroke length mm	Max. stroke length mm	Mounting		Port size Rc Cylinder	Port size Rc Brake section	Max. working pressure MPa Cylinder	Max. working pressure MPa Brake section	Min. working pressure MPa Cylinder	Min. working pressure MPa Brake section
JCC2 JCC2-H	Double acting	20	20.50	700	Basic	00	1/8	M5×0.8	0.7 (≈100 psi, 7 bar)	0.6 (≈87 psi, 6 bar)	0.15 (≈22 psi, 1.5 bar)	0.35 (≈51 psi, 3.5 bar)
		30	75		Axial foot	LB		1/8				
		40	100		Rod side flange	FA						
			150		Eye bracket	CA						
			200		Head side flange	TB						
JCC3 JCC3-H	Double acting	40	50	600	Basic	00	1/4	1/8	1.0 (≈150 psi, 10 bar)	0.7 (≈100 psi, 7 bar)	0.05 (≈7.3 psi, 0.5 bar)	0.3 (≈44 psi, 3 bar)
		50	75		Axial foot	LB	3/8					
		63	100		Rod side flange	FA		1/4				
		80	150	700	Head side flange	FB	1/2					
		100	200	800	Eye bracket	CA		3/8				
		125	300		Clevis bracket	CB		1/2		1.0 (≈150 psi, 10 bar)	0.1 (≈15 psi, 1 bar)	
		140	400		Intermediate trunnion	TC	3/4					
		160	500		Rod side flange	TA						
		180		900	Head side flange	TB						
PCU2	Double acting	40	50	600	Basic	00	1/4		0.2 (≈29 psi, 2 bar)		1.0 (≈150 psi, 10 bar)	
		50	75		Axial foot	LB	3/8					
		63	100		Rod side flange	FA						
		80	150	700	Head side flange	FB	1/2					
		100	200	800	Eye bracket	CA						
			300		Clevis bracket	CB						
			400		Intermediate trunnion	TC						
			500		Rod side flange	TA						
					Head side flange	TB						

Overview

CKD CELLCON cylinder is an actuator with a position detection sensor mounted.
For actuation, control is performed by the controller (separately sold) that receives travel distance pulse signals sent by the actuator, compares them with the programmed values, and performs various operations such as intermediate stop and change of direction.
The FMS-oriented cylinder ensures high accuracy and flexible control.

Features

- Stopping position
  The integrated position detection sensor enables intermediate stop at a desired position.
- Excellent stopping accuracy
  Excellent stopping accuracy of ±1.0 mm or less at cylinder speed of 300 mm/s. (With no load).
- Enhanced safety
  The piston rod is locked when the pneumatic source or power is shut down (in case of power failure or accident) to ensure operation on the safe side.
- Powerful holding force
  Holding force is about twice as large as the cylinder thrust (0.4 MPa). (JCC3: ø40 to 180)

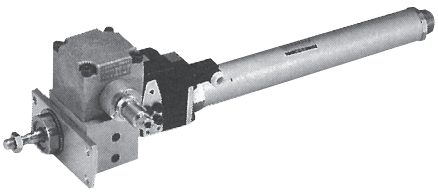
JCC2-FA-30

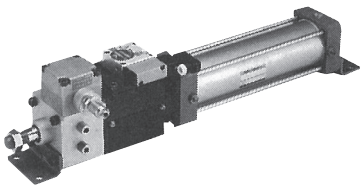
JCC3-LB-63B

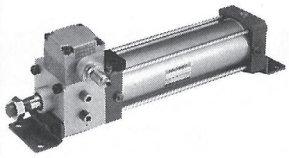
PCU2-LB-63B

Ozone-proof components

	Page
Influence of ozone	Ending 138
Ozone-proof component selection range	Ending 139
Support by product group	Ending 140

Plant environments easily affected by ozone

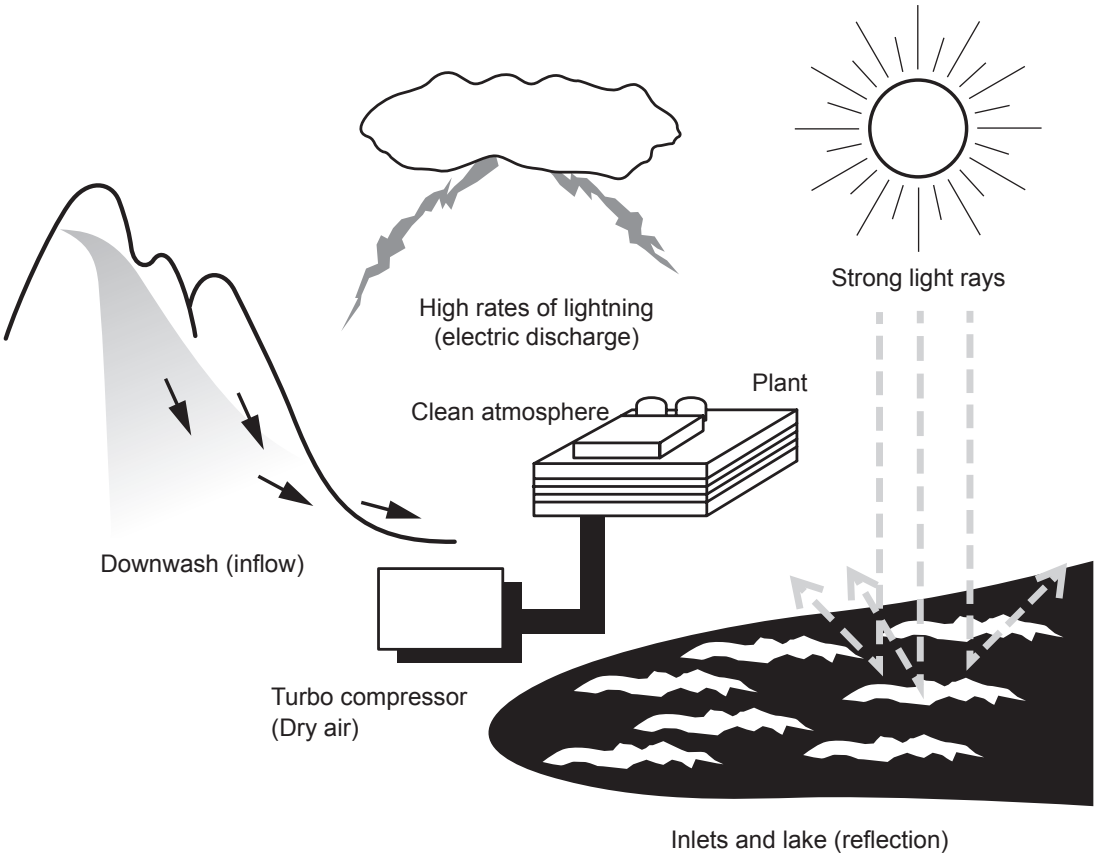

Pneumatic components affected by ozone

Diaphragm and valve seat of regulator

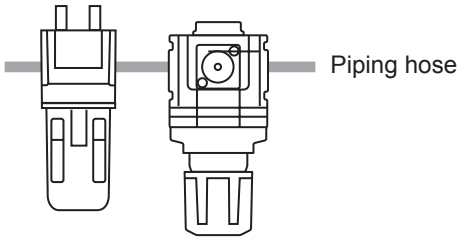

Repeated stress accelerates rubber deterioration

Valve seat of air blow valve

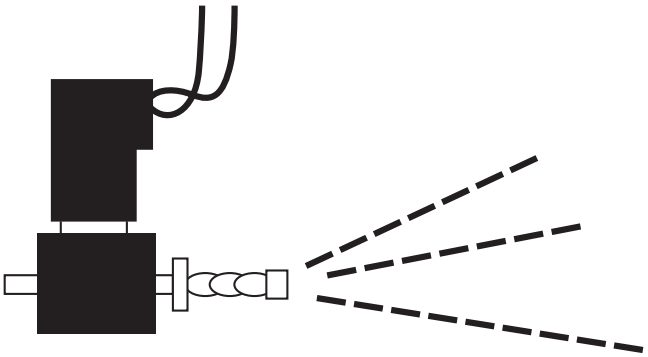

High air flow speed at orifice

Ozone-proof component selection range

A typical pneumatic component system consists of the following devices.

Devices in [ ] require ozone countermeasures.

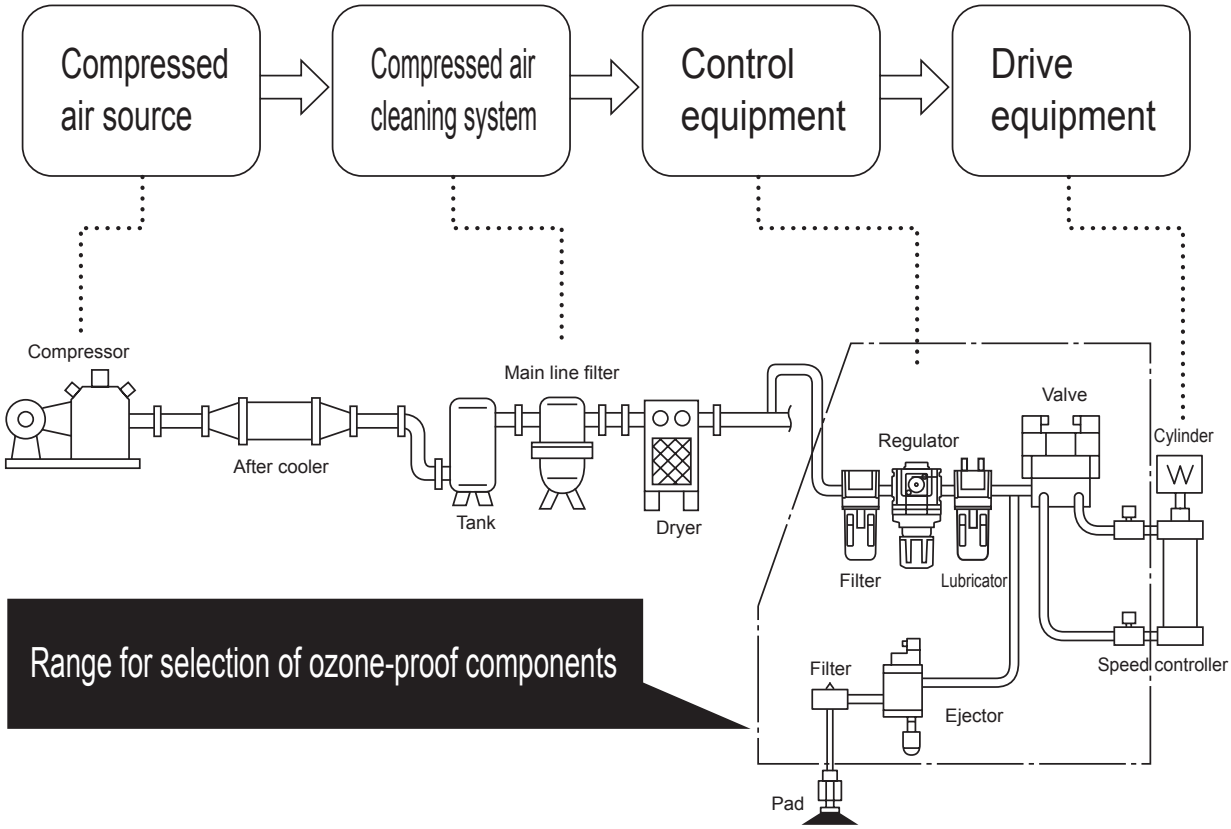

⚠ Safety precautions

Ozone-proof components use fluoro rubber or hydrogenated nitrile rubber for rubber parts.
Therefore, special working environments and conditions that differ from the standard products must be considered when evaluating performance and service life.

Support by product group

1. Pneumatic cylinders

Available as standard specifications.

2. Pneumatic valves

Pneumatic valves are available as indicated below.

- Option
  Ozone-proof specifications are available as an option.

- -P11 compatible
  Parts with ozone-proof specifications are available by adding -P11 at the end of the model No. (Custom order product)

Ozone countermeasures

The material of the rubber parts differs from standard products.
(Dimensions are the same as for standard products.)

Option compatible model

Series		Model No.	How to order
4G Series	4, 5-port valve	$4G^{A}_{B}$* $M4G^{A}_{B}$* $MN4G^{A}_{B}$*	Selectable with option code A. Example) Single unit [Model No.] [Solenoid position] - [Port size] - [Electrical connections] [Option] A - [Rated voltage] Example) Manifold [Model No.] [Solenoid position] - [Port size] - [Electrical connections] [Option] A - [Station No.] - [Rated voltage]
	3-port valve	$3G^{A}_{B}$* $M3G^{A}_{B}$* $MN3G^{A}_{B}$*	
W4G2 Series	4, 5-port valve	W4GB2* $MW4G^{B}_{2}2$*	
	3-port valve	MW3GA2*	
MN4E0 Series	4-port valve	MN4E0*	
	3-port valve	MN3E0*	

-P11 compatible model

Series		Model No.	How to order
4S0 Series	5-port valve	$4S^{A}_{B}0$* $M4S^{A}_{B}0$*	Available by adding -P11 at the end of the model No. (Custom order product) Example) Discrete [Model No.] [Solenoid position] - [Port size] - [Manual operating device] [Electrical connections] [Option] - [Rated voltage] -P11 Example) Manifold [Model No.] [Solenoid position] - [Port size] - [Manual operating device] [Electrical connections] [Option] - [Station No.] - [Rated voltage] - P11
MN4S0 Series	4-port valve	MN4S0* MT4S0*	
	3-port valve	MN3S0* MT3S0*	
4K Series	4, 5-port valve	$4K^{A}_{B}$* $M4K^{A}_{B}$* MN4KB*	
	3-port valve	3KA* M3KA*	
3M Series	3-port valve	$3M^{A}_{B}0$* $M3M^{A}_{B}0$*	
3P Series	3-port valve	$3P^{A}_{B}$* $M3P^{A}_{B}$*	

3. Refining and pressure adjusting components (F.R.L.)

Refer to the “How to order” of each model (Ending Pages 142 to 149).

4. Pneumatic auxiliary components

Pneumatic auxiliary components are available as follows:

- Option
  Ozone-proof specifications are available as an option.

- -P11 compatible
  Parts with ozone-proof specifications are available by adding -P11 at the end of the model No. (Custom order product)

Ozone countermeasures

The material of the rubber parts differs from standard products.
(Dimensions are the same as the standard products.)

Option compatible model

Series	Model No.	How to order
Speed controller **Medium bore size**	SC1	Selectable with option code “X1”. SC1-[Piping port size]-X1

-P11 compatible model

Series	Model No.	How to order
Speed controller **Direct piping/elbow**	SC3R	SC3R - [Piping port size] - [Option] P11
Speed controller **Elbow with push-in fitting**	SC3W	SC3W - [Piping size] - [Compatible tube O.D.] - [Option] P11
Miniature fitting	F	F[Shape] [Flow path shape] [Compatible tube] - [Piping size] - P11
Fitting	GW	GW [Shape] [Compatible tube] - [Piping size] - [Other combination] - P11
Fitting stainless steel	ZW	ZW-[Shape] [Compatible tube O.D.]-[Piping size]-P11

* The following models are available as standard.
Silencer SLM/SLW Series, stainless steel fitting ZJ Series, tube F.U.KX

5. Sensors

* The following models are available as standard.
· Mechanical pressure switch (reed small pressure switch) P*100-W Series
· Pressure switch P4000-W Series

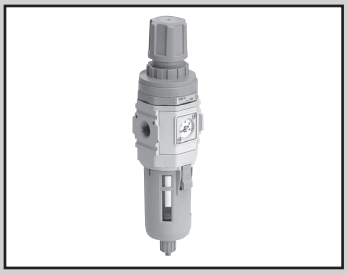

Filter regulator Standard White Series: Ozone-proof

W1000-W/W3000-W W4000-W/W8000-W-P11 Series

Fluoro rubber and hydrogenated nitrile rubber, etc., used for rubber part materials.

● Port size: Rc1/8 to Rc1

JIS symbol

RoHS CAD

How to order

W1000 - 6 ( ) - W - Z P11 - ( ) - A6W G49P

- Ⓐ Model No.
- Ⓑ Port size
- Ⓒ Port thread
- Ⓓ Option *2 *3 *4 *5 *6
- Ⓔ Display unit
- Ⓕ Pipe adaptor set (included) *7 *8
- Ⓖ Other attachments

Ozone-proof specifications

Code		Description	Ⓐ Model No. W1000	W3000	W4000	W8000
Ⓑ Port size						
6		1/8	●			
8		1/4	●	●	●	
10		3/8		●	●	
15		1/2			●	
20		3/4				●
25		1				●
Ⓒ Port thread		*9				
Blank		Rc thread	●	●	●	●
N		NPT thread	●	●	●	●
G		G thread	●	●	●	●
Ⓓ Option						
Drain discharge	Blank	Manual drain cock	●	●	●	●
	F	Auto-drain manual override (NO)		●	●	●
	F1	Auto-drain manual override (NC)		●	●	●
	FF	Large auto-drain with manual override (NO)				●
	FF1	Large auto-drain with manual override (NC)				●
Bowl material	Blank	Polycarbonate bowl	●	●	●	●
	Z	Nylon bowl	●	●	●	●
	M	Metal bowl		●	●	●
Element	Blank	5 μm	●	●	●	●
	Y	0.3 μm (submicron)		●	●	●
Pressure range	Blank	0.05 to 0.85 MPa	●	●	●	●
	L	0.05 to 0.35 MPa	●	●	●	●
Pressure relief	Blank	With relief mechanism	●	●	●	●
	N	Non-relief	●	●	●	●
Pressure gauge	Blank	With standard pressure gauge (G401)	●	●	●	●
	T	No pressure gauge (gauge port (1/4) is assembled sealed)	●	●	●	●
	T8	Pressure gauge ready option (gauge port (1/4) is left open)	●	●	●	●
X1		IN/OUT reverse flow (right to left)	●	●	●	●
Ⓔ Display unit						
Blank		MPa display, Rc thread	●	●	●	●
J1		MPa display, NPT, G thread	●	●	●	●
Ⓕ Pipe adaptor set (included)		*10				
Blank		No included products	●	●	●	●
A6*W		1/8 pipe adaptor set	●			
A8*W		1/4 pipe adaptor set	●	●	●	
A10*W		3/8 pipe adaptor set	●	●	●	
A15*W		1/2 pipe adaptor set		●	●	
A20*W		3/4 pipe adaptor set			●	●
A25*W		1 pipe adaptor set				●
A32*W		1 1/4 pipe adaptor set				●
*** Adaptor thread**						
Blank		Rc thread	●	●	●	●
N		NPT thread	●	●	●	●
G		G thread	●	●	●	●
Ⓖ Other attachments		*11				
Blank		No included products	●	●	●	●
BW		C type bracket	●	●	●	●
B3W		L type bracket	●	●	●	
G49P		Pressure gauge: G49D-8-P10 (L: G49D-8-P04)	●	●	●	●
G59P		Pressure gauge: G59D-8-P10 (L: G59D-8-P04)	●	●	●	●
G40P		Pressure gauge: G40D-8-P10 (L: G40D-8-P04)	●	●	●	●

⚠ Precautions for model No. selection

Ending

*1: Refer to "Pneumatic, Vacuum and Auxiliary Components (catalog No. CB-024SA)" for specifications and attachments.
*2: Select options for the drainage, bowl material, element and regulator.
When selecting options for several items, list options in order from the top.
*3: If "L" is selected for pressure range option, a low-pressure gauge (0 to 0.4 MPa) is used.
*4: In the case of option code "F", the min. working pressure of the auto-drain is 0.1 MPa.
Air is purged with initial drain until pressure reaches 0.1 MPa.
*5: In the case of option code "F1", the min. working pressure of the auto-drain is 0.15 MPa.
*6: For "T", a gauge plug is assembled instead of a pressure gauge.
*7: Pipe adaptor set A*00-**-W is included.
*8: The pipe adaptor set and C type bracket cannot be used together.
*9: G threads and NPT threads are available for IN, OUT, gauge port and drain outlet (metal bowl with auto-drain).
*10: The adaptor port size can be selected from Rc, NPT or G.
Blank: Rc thread, N: NPT thread, G: G thread.
(Example) A8G
*11: If NPT is selected for Ⓒ Port thread, an NPT pressure gauge is supplied. If Rc or G thread is selected, an R thread pressure gauge is supplied.

Dimensions

Same as standard products. Refer to "Pneumatic, Vacuum and Auxiliary Components (catalog No. CB-024SA)".

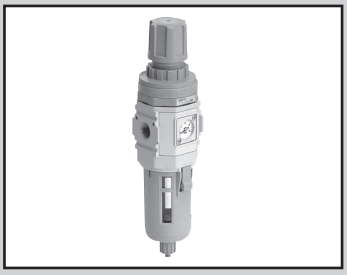

Reverse filter and regulator Standard White Series: Ozone-proof

W1100-W/W3100-W W4100-W/W8100-W-P11 Series

Fluoro rubber and hydrogenated nitrile rubber, etc., used for rubber part materials.

● Port size: Rc1/8 to Rc1

JIS symbol

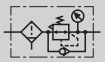

RoHS CAD

How to order

W1000 - 6 ( ) -W- Z P11 - ( ) - A6W G49P

- Ⓐ Model No.
- Ⓑ Port size
- Ⓒ Port thread
- Ⓓ Option *2 *3 *4 *5 *6 *7
  - * Refer to "Pneumatic, Vacuum and Auxiliary Components (catalog No. CB-024SA)" for the explanation of the option.
- Ⓔ Display unit
- Ⓕ Pipe adaptor set (included) *8 *9
- Ⓖ Other attachments

Ozone-proof specifications

Code		Description	Ⓐ Model No. W1100	W3100	W4100	W8100
Ⓑ Port size						
6		1/8	●			
8		1/4	●	●	●	
10		3/8		●	●	
15		1/2			●	
20		3/4				●
25		1				●
Ⓒ Port thread		*10				
Blank		Rc thread	●	●	●	●
N		NPT thread	●	●	●	●
G		G thread	●	●	●	●
Ⓓ Option						
Drain discharge	Blank	Manual drain cock	●	●	●	●
	F	Auto-drain manual override (NO)		●	●	●
	F1	Auto-drain manual override (NC)		●	●	●
	FF	Large auto-drain with manual override (NO)				●
	FF1	Large auto-drain with manual override (NC)				●
Bowl material	Blank	Polycarbonate bowl	●	●	●	●
	Z	Nylon bowl	●	●	●	●
	M	Metal bowl		●	●	●
Element	Blank	5 μm	●	●	●	●
	Y	0.3 μm (submicron)		●	●	●
Pressure Range	Blank	0.05 to 0.85 MPa	●	●	●	●
	L	0.05 to 0.35 MPa	●	●	●	●
Pressure relief	Blank	With relief mechanism	●	●	●	●
	N	Non-relief	●	●	●	●
Pressure gauge	Blank	With standard pressure gauge (G401)	●	●	●	●
	T	No pressure gauge (gauge port (1/4) is assembled sealed)	●	●	●	●
	T8	Pressure gauge ready option (gauge port (1/4) is left open)	●	●	●	●
X1		IN/OUT reverse flow (right to left)	●	●	●	●
Ⓔ Display unit						
Blank		MPa display, Rc thread	●	●	●	●
J1		MPa display, NPT, G thread	●	●	●	●
Ⓕ Pipe adaptor set (included)		*11				
Blank		No included products	●	●	●	●
A6*W		1/8 pipe adaptor set	●			
A8*W		1/4 pipe adaptor set	●	●	●	
A10*W		3/8 pipe adaptor set	●	●	●	
A15*W		1/2 pipe adaptor set		●	●	
A20*W		3/4 pipe adaptor set			●	●
A25*W		1 pipe adaptor set				●
A32*W		1 1/4 pipe adaptor set				●
*** Adaptor thread**						
Blank		Rc thread	●	●	●	●
N		NPT thread	●	●	●	●
G		G thread	●	●	●	●
Ⓖ Other attachments		*12				
Blank		No included products	●	●	●	●
BW		C type bracket	●	●	●	●
B3W		L type bracket	●	●	●	
G49P		Pressure gauge: G49D-8-P10 (L: G49D-8-P04)	●	●	●	●
G59P		Pressure gauge: G59D-8-P10 (L: G59D-8-P04)	●	●	●	●
G40P		Pressure gauge: G40D-8-P10 (L: G40D-8-P04)	●	●	●	●

⚠ Precautions for model No. selection

*1: Refer to "Pneumatic, Vacuum and Auxiliary Components (catalog No. CB-024SA)" for specifications and attachments.
*2: Select options for the drainage, bowl material, element and regulator.
When selecting options for several items, list options in order from the top.
*3: If "L" is selected for pressure range option, a low-pressure gauge (0 to 0.4 MPa) is used.
***4: Positions of check valve and pressure gauge cannot be changed.**
If the IN and OUT directions must be reversed, indicate "X1" at the end of the option field.
*5: In the case of option code "F", the min. working pressure of the auto-drain is 0.1 MPa.
Air is purged with initial drain until pressure reaches 0.1 MPa.
*6: In the case of option code "F1", the min. working pressure of the auto-drain is 0.15 MPa.
*7: For "T", a gauge plug is assembled instead of a pressure gauge.
*8: Pipe adaptor set A*00-**-W is included.
*9: The pipe adaptor set and C type bracket cannot be used together.
*10: G threads and NPT threads are available for IN, OUT, gauge port and drain outlet (metal bowl with auto-drain).
*11: The adaptor port size can be selected from Rc, NPT or G.
Blank: Rc thread, N: NPT thread, G: G thread.
(Example) A8G
*12: If NPT is selected for Ⓒ Port thread, an NPT pressure gauge is supplied. If Rc or G thread is selected, an R thread pressure gauge is supplied.

Dimensions

Same as standard products. Refer to "Pneumatic, Vacuum and Auxiliary Components (catalog No. CB-024SA)".

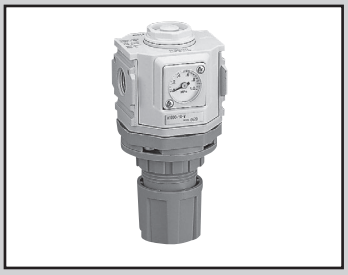

Regulator Standard White Series: Ozone-proof

R1000-W/R2000-W/R3000-W R4000-W/R6000-W/R8000-W-P11 Series

Fluoro rubber and hydrogenated nitrile rubber, etc., used for rubber part materials.

● Port size: Rc1/8 to Rc1

JIS symbol

RoHS CAD

How to order

R1000 - 6 ( ) - W - L P11 - ( ) - A6W BW

- Ⓐ Model No.
- Ⓑ Port size
- Ⓒ Port thread
- Ⓓ Option *2 *3 *4
- Ⓔ Display unit
- Ⓕ Pipe adaptor set (included) *5 *6
- Ozone-proof specifications
- Ⓖ Other attachments

* Refer to "Pneumatic, Vacuum and Auxiliary Components (catalog No. CB-024SA)" for the explanation of the option.

	Code	Description	Ⓐ Model No. R1000	R2000	R3000	R4000	R6000	R8000
Ⓑ Port size								
	6	1/8	●					
	8	1/4	●	●	●	●		
	10	3/8		●	●	●		
	15	1/2				●		
	20	3/4					●	●
	25	1					●	●
Ⓒ Port thread		*7						
	Blank	Rc thread	●	●	●	●	●	●
	N	NPT thread	●	●	●	●	●	●
	G	G thread	●	●	●	●	●	●
Ⓓ Option								
Pressure range	Blank	0.05 to 0.85 MPa	●	●	●	●	●	●
	L	0.05 to 0.35 MPa	●	●	●	●	●	●
Pressure relief	Blank	With relief mechanism	●	●	●	●	●	●
	N	Non-relief	●	●	●	●	●	●
Pressure gauge	Blank	With standard pressure gauge (G401)	●	●	●	●	●	●
	T	No pressure gauge (gauge port (1/4) is assembled sealed)	●	●	●	●	●	●
	T8	Pressure gauge ready option (gauge port (1/4) is left open)	●	●	●	●	●	●
	X1	IN/OUT reverse flow (right to left)	●	●	●	●	●	●
Ⓔ Display unit								
	Blank	MPa display, Rc thread	●	●	●	●	●	●
	J1	MPa display, NPT, G thread	●	●	●	●	●	●
Ⓕ Pipe adaptor set (included)		*7						
	Blank	No included products	●	●	●	●	●	●
	A6*W	1/8 pipe adaptor set	●					
	A8*W	1/4 pipe adaptor set	●	●	●	●		
	A10*W	3/8 pipe adaptor set	●	●	●	●		
	A15*W	1/2 pipe adaptor set		●	●	●		
	A20*W	3/4 pipe adaptor set				●	●	●
	A25*W	1 pipe adaptor set					●	●
	A32*W	1 1/4 pipe adaptor set					●	●
*** Adaptor thread**								
	Blank	Rc thread	●	●	●	●	●	●
	N	NPT thread	●	●	●	●	●	●
	G	G thread	●	●	●	●	●	●
Ⓖ Other attachments		*8						
	Blank	No included products	●	●	●	●	●	●
	BW	C type bracket	●	●	●	●	●	●
	B3W	L type bracket	●	●	●	●	●	
	B4W	B type bracket		●				
	G49P	Pressure gauge: G49D-8-P10 (L: G49D-8-P04)	●	●	●	●	●	●
	G59P	Pressure gauge: G59D-8-P10 (L: G59D-8-P04)	●	●	●	●	●	●
	G40P	Pressure gauge: G40D-8-P10 (L: G40D-8-P04)	●	●	●	●	●	●

Ending

⚠ Precautions for model No. selection

*1: Refer to "Pneumatic, Vacuum and Auxiliary Components (catalog No. CB-024SA)" for specifications and attachments.
*2: When selecting options for several items, list options in order from the top.
*3: If "L" is selected for pressure range option, a low-pressure gauge (0 to 0.4 MPa) is used.
*4: For "T", a gauge plug is assembled instead of a pressure gauge.
Working temperature is 5 to 50°C.
*5: Pipe adaptor set A*00-**-W is included.
*6: The pipe adaptor set and C type bracket cannot be used together.
*7: G and NPT threads are available for IN, OUT and gauge ports.
*8: The adaptor port size can be selected from Rc, NPT or G. Blank: Rc thread, N: NPT thread, G: G thread. (Example) A8G
*9: If NPT is selected for ⒸPort thread, an NPT pressure gauge is supplied. If Rc or G thread is selected, an R thread pressure gauge is supplied.

Dimensions

Same as standard products. Refer to "Pneumatic, Vacuum and Auxiliary Components (catalog No. CB-024SA)".

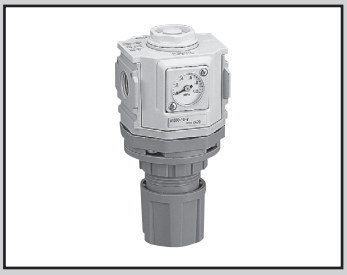

Reverse regulator Standard White Series: Ozone-proof

R1100-W/R2100-W/R3100-W R4100-W/R6100-W/R8100-W-P11 Series

Fluoro rubber and hydrogenated nitrile rubber, etc., used for rubber part materials.

● Port size: Rc1/8 to Rc1

JIS symbol

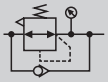

RoHS CAD

How to order

R1100 - 6 ( ) - W - L P11 - ( ) - A6W BW

- Ⓐ Model No.
- Ⓑ Port size
- Ⓒ Port thread
- Ⓓ Option *2 *3 *4
- * Refer to "Pneumatic, Vacuum and Auxiliary Components (catalog No. CB-024SA)" for the explanation of the option.
- Ⓔ Display unit
- Ⓕ Pipe adaptor set (included) *5 *6
- Ⓖ Other attachments
- Ozone-proof specifications

Code		Description	Ⓐ Model No. R1100	R2100	R3100	R4100	R6100	R8100
Ⓑ Port size								
6		1/8	●					
8		1/4	●	●	●	●		
10		3/8		●	●	●		
15		1/2				●		
20		3/4					●	●
25		1					●	●
Ⓒ Port thread		*7						
Blank		Rc thread	●	●	●	●	●	●
N		NPT thread	●	●	●	●	●	●
G		G thread	●	●	●	●	●	●
Ⓓ Option								
Pressure range	Blank	0.05 to 0.85 MPa	●	●	●	●	●	●
	L	0.05 to 0.35 MPa	●	●	●	●	●	●
Pressure relief	Blank	With relief mechanism	●	●	●	●	●	●
	N	Non-relief	●	●	●	●	●	●
Pressure gauge	Blank	With standard pressure gauge (G401)	●	●	●	●	●	●
	T	No pressure gauge (gauge port (1/4) is assembled sealed)	●	●	●	●	●	●
	T8	Pressure gauge ready option (gauge port (1/4) is left open)	●	●	●	●	●	●
X1		IN/OUT reverse flow (right to left)	●	●	●	●	●	●
Ⓔ Display unit								
Blank		MPa display, Rc thread	●	●	●	●	●	●
J1		MPa display, NPT, G thread	●	●	●	●	●	●
Ⓕ Pipe adaptor set (included)		*8						
Blank		No included products	●	●	●	●	●	●
A6*W		1/8 pipe adaptor set	●					
A8*W		1/4 pipe adaptor set	●	●	●	●		
A10*W		3/8 pipe adaptor set	●	●	●	●		
A15*W		1/2 pipe adaptor set		●	●	●		
A20*W		3/4 pipe adaptor set				●	●	●
A25*W		1 pipe adaptor set					●	●
A32*W		1 1/4 pipe adaptor set					●	●
*** Adaptor thread**								
Blank		Rc thread	●	●	●	●	●	●
N		NPT thread	●	●	●	●	●	●
G		G thread	●	●	●	●	●	●
Ⓖ Other attachments		*9						
Blank		No included products	●	●	●	●	●	●
BW		C type bracket			●	●		
B3W		L type bracket			●	●		
B4W		B type bracket		●				
G49P		Pressure gauge: G49D-8-P10 (L: G49D-8-P04)	●	●	●	●	●	●
G59P		Pressure gauge: G59D-8-P10 (L: G59D-8-P04)	●	●	●	●	●	●
G40P		Pressure gauge: G40D-8-P10 (L: G40D-8-P04)	●	●	●	●	●	●

⚠ Precautions for model No. selection

*1: Refer to "Pneumatic, Vacuum and Auxiliary Components (catalog No. CB-024SA)" for specifications and attachments.
*2: When selecting options for several items, list options in order from the top.
*3: If "L" is selected for pressure range option, a low-pressure gauge (0 to 0.4 MPa) is used.
*4: Positions of check valve and pressure gauge cannot be changed. If the IN and OUT directions must be reversed, indicate "X1" at the end of the option field.
For "T", a gauge plug is assembled instead of a pressure gauge.
*5: Pipe adaptor set A*00-**-W is included.
*6: The pipe adaptor set and C type bracket cannot be used together.
*7: G and NPT threads are available for IN, OUT and gauge ports.
*8: The adaptor port size can be selected from Rc, NPT or G. Blank: Rc thread, N: NPT thread, G: G thread. (Example) A8G
*9: If NPT is selected for ⒸPort thread, an NPT pressure gauge is supplied. If Rc or G thread is selected, an R thread pressure gauge is supplied.

Dimensions

Same as standard products. Refer to "Pneumatic, Vacuum and Auxiliary Components (catalog No. CB-024SA)".

Compact regulator: Ozone-proof

RB500-P11 Series

Fluoro rubber and hydrogenated nitrile rubber, etc., used for rubber part materials.

● Port size: Push-in fitting ø4, ø6

JIS symbol

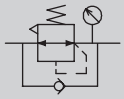

RoHS CAD

How to order

RB500 - SSC4 - P G39 P11

- RB500: Model No.
- SSC4: Ⓐ Connection
- P: Ⓑ Option
- G39: Ⓒ Pressure gauge
- P11: Ozone-proof specifications

Code			Description
Ⓐ Connection			
Direction	IN	S	Straight
		L	Elbow
	OUT	S	Straight
		L	Elbow
Bore size		C4	ø4
		C6	ø6
Ⓑ Option			
Panel Mount		Blank	Without nut
		P	With nut *3
Pressure range		Blank	0.05 to 0.7 MPa
		L	0.05 to 0.35 MPa
Pressure relief		Blank	Relief
		N	Non-relief
Ⓒ Pressure gauge			
T			No pressure gauge
Blank (Press range: Blank)			With pressure gauge (G29D-6-P10)
Blank (Pressure range: L)			With pressure gauge (G39D-6-P04)
G39			With pressure gauge (G39D-6-P10)

⚠ Precautions for model No. selection

*1: Refer to “Pneumatic, Vacuum and Auxiliary Components (catalog No. CB-024SA)” for specifications.
*2: ø21 0 to 1.0 MPa pressure gauge is standard. For low pressure, ø27 0 to 0.4 MPa low pressure gauge is provided.
*3: Indicate option code “P” for panel mounting.

Dimensions

Same as standard products. Refer to “Pneumatic, Vacuum and Auxiliary Components (catalog No. CB-024SA)”.

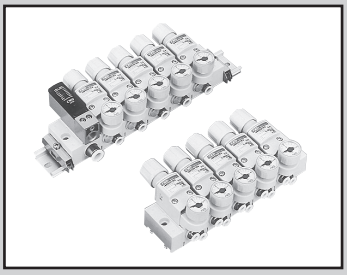

Block manifold regulator: Ozone-proof

MNRB500-P11 Series

Fluoro rubber and hydrogenated nitrile rubber, etc., used for rubber part materials.

● Port size: Push-in fitting ø4, ø6, ø8

RoHS CAD

How to order

MNRB500A - SSC64 - 5 - N G39 - D P11

- Ⓐ Model No. *1
- Ⓑ Fitting
- Ⓒ Port size
- Ⓓ Station No. *2
- Ⓔ Pressure gauge *4
- Ⓔ Option *3
- Ⓕ Mounting method
- Ozone-proof specifications

Code	Description	MNRB500A	MNRB500B
Ⓐ Model No.			
MNRB500A	Common supply		
MNRB500B	Individual supply		
Ⓑ Fitting			
IN direction			
S	Straight		
L	Elbow		
OUT direction			
S	Straight		
L	Elbow		
Ⓒ Port size IN/OUT			
C64	IN; ø6, OUT; ø4	●	
C66	IN; ø6, OUT; ø6	●	
C84	IN; ø8, OUT; ø4	●	
C86	IN; ø8, OUT; ø6	●	
C4	IN, OUT; ø4		●
C6	IN, OUT; ø6		●
Ⓓ Station No.	*3		
1	1 station		
2	2 stations		
⋮	⋮		
10	10 stations		
Ⓔ Option			
Pressure range	**Blank** 0.05 to 0.7 MPa (pressure gauge: G29D-6-P10)	●	
	L 0.05 to 0.35 MPa (gauge: G39D-6-P04)	●	
Pressure relief	**Blank** Relief	●	
	N Non-relief	●	
Pressure gauge *4	**Blank** With pressure gauge	●	
	T Without pressure gauge (gauge port Rc 1/8)	●	
	G39 With pressure gauge (G39D-6-P10)	●	
Flow direction	**Blank** Standard flow (left → right)	●	●
	X1 Reverse flow (right → left)	●	
Ⓕ Mounting method			
Blank	DIN rail mount		
D	Direct mount		

JIS symbol

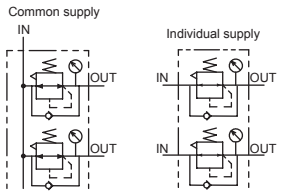

Precautions for model No. selection

*1: Refer to "Pneumatic, Vacuum and Auxiliary Components (catalog No. CB-024SA)" for specifications.
*2: The air supply block is one station.
When using three or more stations simultaneously with the common supply, increase one supply block station for every three stations.
Designate with mix manifold specifications sheet.
*3: Up to five direct mounting stations can be used.
*4: Options and pressure gauges for each regulator block are the same.
*5: ø21 0 to 1.0 MPa pressure gauge is standard.
For low pressure, ø27 0 to 0.4 MPa low-pressure gauge is provided.
*6: When other than basic model specifications, ask CKD to issue the mix manifold specifications on page 331.

Dimensions

Same as standard products. Refer to "Pneumatic, Vacuum and Auxiliary Components (catalog No. CB-024SA)".

Regulator: Ozone-proof

B2019-P11 Series

Fluoro rubber or hydrogenated nitrile rubber, etc., used for rubber part materials.

● Port size: Rc1/8, Rc1/4

JIS symbol

How to order

B2019 - 1C - NPB P11

- B2019: Model No.
- 1C: Ⓐ Port size *2
- NPB: Ⓑ Option *1 *3
- P11: Ozone-proof specifications

Code		Description
Ⓐ Port size		
1C		Rc1/8
2C		Rc1/4
Ⓑ Option		
Regulator	**Blank**	Standard
	N	Non-relief
	L	Low pressure (0.02 to 0.34 MPa)
	P	Panel mount
Included product	**Blank**	No included products
	G	Pressure gauge
	B	Bracket

⚠ Precautions for model No. selection

*1: Refer to "Pneumatic, Vacuum and Auxiliary Components (catalog No. CB-024SA)" for specifications and attachments.
*2: If port size NPT thread is selected, do not indicate nominal size C. Example) B2019-1
*3: The pressure gauge supplied is G49D-6-P10 (G49D-6-P04 for low pressure).

Dimensions

Same as standard products. Refer to "Pneumatic, Vacuum and Auxiliary Components (catalog No. CB-024SA)".

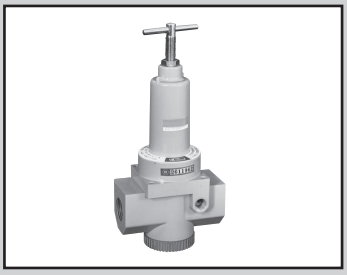

Reverse regulator (chuck valve integrated): Ozone-proof

2415-P11 Series

Fluoro rubber and hydrogenated nitrile rubber, etc., used for rubber part materials.

● Port size: Rc3/4, Rc1, Rc1 1/2

JIS symbol

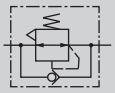

RoHS

How to order

2415 - 6C - NKG P11

- 2415: Model No.
- 6C: Ⓐ Port size *2
- NKG: Ⓑ Option *1 *3
- P11: Ozone-proof specifications

Code		Description
Ⓐ Port size		
6C		Rc3/4
8C		Rc1
10C		Rc1 1/2
Ⓑ Option		
Regulator	**Blank**	Standard
	N	Non-relief
	K	Plastic knob
Included product	**Blank**	No included products
	G	Pressure gauge

⚠ Precautions for model No. selection

*1: Refer to "Pneumatic, Vacuum and Auxiliary Components (catalog No. CB-024SA)" for specifications and attachments.
*2: If port size NPT thread is required, do not indicate nominal size C. Example) 2415-6
*3: The pressure gauge supplied is G59D-8-P10 (G59D-8-P04 for low pressure).

Dimensions

Same as standard products. Refer to "Pneumatic, Vacuum and Auxiliary Components (catalog No. CB-024SA)".

Custom order products

Available as a custom order. Contact CKD for details.

SC-M5 speed controller: Ozone-proof

■ Rubber material is changed to fluoro rubber
■ Port size: M5

2QV/3QV Quick Valve: Ozone-proof

■ Rubber part materials changed to fluoro rubber or hydrogenated nitrile rubber, etc.
■ 2- and 3-port valves are available

DSC speed controller with adjusting dial: Ozone-proof

■ Rubber part materials changed to fluoro rubber or hydrogenated nitrile rubber, etc.
■ Port size: Rc1/8, Rc1/4, Rc3/8, Rc1/2

JIS symbols

JIS symbols used in this catalog are old symbols following JISB0125-1: 2001.
Refer to JISB0125-1: 2007 or JFPS2011: 2006 for new symbols.

	Page
1. Element of symbol	Ending 152
2. Line and port	Ending 153
3. Directional control valve	Ending 153
4. Pressure control valve	Ending 159
5. Flow rate control valve	Ending 159
6. Cylinder and motor	Ending 159
7. Power and tank	Ending 160
8. Air adjustment component	Ending 160
9. Auxiliary components and other components	Ending 161

CAD data is available.

JIS symbol list

1. Element of symbol

(a) Symbol element

Name	Symbol	Applications	Remarks
Line Continuous line		(1) Main line (2) Air supply line to pilot valve (3) Electric signal line	· Return line included · Other: Indicate the electrical code to distinguish from the pipeline.
Broken line		(1) Pilot operation line (2) Drain line (3) Filter (4) Valve switching position	· Internal pilot · External pilot
Dashed line		Surrounding line	· Surrounding line indicating unit with more than one function
Double line	$\frac{1}{5}l$	Mechanical connection	· Rotary shaft, lever, piston rod, etc.
Circle Large circle	l	Energy converter	· Pump, compressor, electric motor, etc.
Medium circle	$\frac{1}{2} \sim \frac{3}{4}l$	(1) Measuring instrument (2) Rotation fitting	
Small circle	$\frac{1}{4} \sim \frac{1}{3}l$	(1) Check valve (2) Link (3) Roller	· Roller: Put a dot in the center.
Point	$\frac{1}{8} \sim \frac{1}{5}l$	(1) Connection of pipeline (2) Roller axis	
Half circle	l	Shaft of the pump or actuator whose rotating angle is limited	
Square	l	(1) Fluid control components (2) Driving motor other than electric motor	· The port intersects vertically with the side.
	l	Fluid adjustment components	· The port intersects with the corner. · Filter, drain separator, lubricator, heat exchanger, etc.
	$\frac{1}{2}l$ $\frac{1}{2}l$	(1) Cushion in cylinder (2) Weight in accumulator	
Rectangle	m l	(1) Cylinder (2) Valve	· $m>l$
	$\frac{1}{4}l$ l	Piston	
	m $\frac{1}{2}l$	Specific operation	· $l \le m \le 2l$ · Refer to Item 3 (a)
Others Hollow (large)	m $\frac{1}{2}l$	Oil tank (ventilation)	· $m>l$
Hollow (small)	$\frac{1}{4}l$ $\frac{1}{2}l$	Local display of oil tank (ventilation)	
Capsule	l $2l$	(1) Oil tank (closed) (2) Pneumatics tank (3) Accumulator (4) Auxiliary gas vessel	

(b) Functional element

Name	Symbol	Applications	Remarks
Equilateral triangle			· Fluid energy direction · Type of fluid · Energy source display
Filled in	▶	Hydraulic pressure	
In white	▷	Compressed air and other gas pressure	· Including exhaust to atmosphere
Arrow display Straight line or diagonal line		(1) Linear movement (2) Fluid flow path and direction in valve (3) Heat flow direction	
Curve	90°	Rotary motion	· Arrow indicates the rotation direction viewed from shaft free end
Diagonal line		Variable operation or adjustment method	· Draw diagonal line with appropriate length · Pump, spring or variable solenoid actuator, etc.
Others		Electric	· Use the following symbols when AC and DC identification is required Closed path Port
		Closed path or closed port	
		Solenoid actuator	
		Temperature instruction or adjustment	
		Driving motor	
		Spring	· Refer to Item 7
		Restriction	· Two-thread is preferable
	90°	Simplified code of valve seat of check valve	

(c) Mechanical element

Name	Symbol	Remarks
Rod		· 2-direction operation · Arrow indication is optional
Rotary shaft		· 2-direction operation · Arrow indication is optional
Detent		· 2-direction operation · Vertical line on notch indicates clamp
Latch	*	· 1-direction operation · * Code showing how to release

Name	Symbol	Remarks
Over center mechanism		· 2-direction operation

2. Line and port
(a) Pipeline

Name	Symbol	Remarks
Connection		
Intersection		· Not connected
Flexible line		· Hose (normally connected to movable part)

(b) Port

Name	Symbol	Remarks
Air vent		· Air venting is continuously performed · Air venting is performed during a specific period and then the port is closed · Air venting is performed by controlling the check mechanism as necessary
Exhaust port		· For pneumatic pressure only · Without port · With port
Quick fitting	Connected state Removed state	· Without check valve · With check valve (self sealant fitting)
Rotation fitting		· Swivel joint and rotary joint
1 line		· 1-direction rotation
3 line		· 2-direction rotation

3. Directional control valve
(a) Operation

Name	No.	Symbol	Remarks
Manual control	⑩		· General symbol used when the operation or the number of operating directions is not specified
Push button	⑪		· 1-direction operation
Pull button	⑫		· 1-direction operation
Push/pull button	⑬		· 2-direction operation
Lever	⑭		·2-direction operation (including rotary motion)
Pedal	⑮		·1-direction operation (including rotary motion)
Double pedal	⑯		· 2-direction operation (including rotary motion)
Mechanical control plunger	⑳ ㉑		· 1-direction operation
Variable stroke length limiter	㉒		· 2-direction operation
Spring	㉓		· 1-direction operation
Roller	㉔		· 2-direction operation
Pull roller	㉕		· Arrow shows operation direction. Indication may be omitted. · 1-direction operation
Electrical control	㉚		· Solenoid, torque motor, etc.
Linear electric actuator Single acting solenoid	㉛		· 1-direction operation · Diagonal line may also run downward left-right
Double acting solenoid	㉜		· 2-direction operation · Diagonal line may also spread upward
Single acting variable solenoid actuator	㉝		· 1-direction operation · Proportional solenoid, · Force motor, etc.
Double acting variable solenoid actuator	㉞		· 2-direction operation · Torque motor
Rotary electric actuator	㉟		· 2-direction operation · Electric motor
Indirect electric actuator Single acting solenoid	㊱		* JIS covers pilot operation, but the valve is typically used as a solenoid valve, so the transfer symbols ㊱ and ㊲ have been used for the electric operation classification.
Double acting solenoid	㊲		
Pilot operation Direct pilot operation	㊵		
	㊶		· When the pressurized area is different, indicate the values of the area ratio within the rectangle when required.
Internal pilot	㊸		· Operation flow path is provided inside the device.
External pilot	㊹		· Operation flow path is provided outside the device.

Name	No.	Symbol	Remarks
Indirect pilot operation Pressurized operation method Pneumatic pilot	㊷		· Internal pilot · No primary operation
Electromagnetic/ pneumatic pilot	㊱	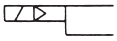	· With primary operation by single acting solenoid · Internal pilot * As this symbol generally indicates a solenoid valve, it is classified into the electrical control category and identified with a number in the ㉚s.
Electromagnetic/ pneumatic pilot with manual override	㊱ ⑩	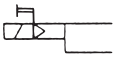	· Valve with manual override added to the above operation

(b) Directional control valve basic

No. of Ports	No. of Positions	Status of normal position	No.	Symbol	Remarks
2	2	Normally closed	Ⓐ	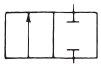	Normally closed
2	2	Normally open	Ⓑ	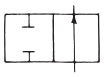	Normally open
3	2	Normally closed	Ⓒ	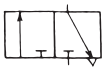	
3	2	Normally open	Ⓓ		
4	2	P/B connection	Ⓔ	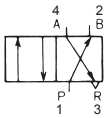 Note) Numerals are as indicated in JISB 8375 (ISO 5599).	
5	2	P/B connection	Ⓕ	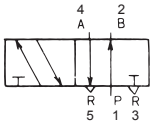	
4	3	All ports closed	Ⓖ	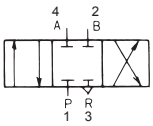	
5	3	All ports closed	Ⓗ	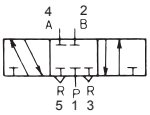	
4	3	A/B/R connection	Ⓘ	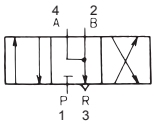	
5	3	A/B/R connection	Ⓙ	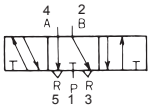	

No. of Ports	No. of Positions	Status of normal position	No.	Symbol	Remarks
4	3	P/A/B connection	Ⓚ	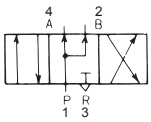	
5	3	P/A/B connection	Ⓛ	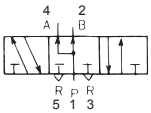 Note) Numerals are as indicated in JISB 8375 (ISO 5599).	

(c) Manual control valve

Name			Combination symbol			Symbol
Basic and operating method	No. of Ports	No. of Positions	Operation mech	Basic	Operation mech	
Direct acting normally closed push-button/ spring/return	2	2	⑪	Ⓐ	㉓	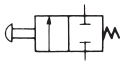
Direct acting normally open push-button/spring/ return	2	2	⑪	Ⓑ	㉓	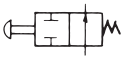
Direct acting normally closed push-button/ spring/return	3	2	⑪	Ⓒ	㉓	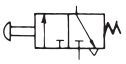
Direct acting normally open push-button/spring/ return	3	2	⑪	Ⓓ	㉓	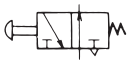
Direct acting normally closed pull button/spring/ return	2	2	⑫	Ⓐ	㉓	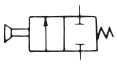
Direct acting normally open pull button/spring/ return	2	2	⑫	Ⓑ	㉓	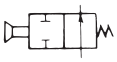
Direct acting normally closed pull button/spring/ return	3	2	⑫	Ⓒ	㉓	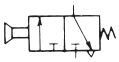
Direct acting normally open pull button/spring/ return	3	2	⑫	Ⓓ	㉓	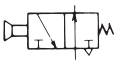
Direct acting normally closed push/pull button	2	2	⑬	Ⓐ		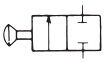
Direct acting normally open push/pull button	2	2	⑬	Ⓑ		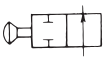
Direct acting normally closed push/pull button	3	2	⑬	Ⓒ		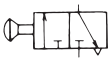
Direct acting normally open push/pull button	3	2	⑬	Ⓓ		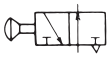

Name			Combination symbol			Symbol
Basic and operating method	No. of Ports	No. of Positions	Operation mech	Basic	Operation mech	
Direct acting normally closed lever/spring/return	2	2	⑭	Ⓐ	㉓	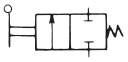
Direct acting normally open lever/spring/return	2	2	⑭	Ⓑ	㉓	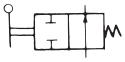
Direct acting normally closed lever/spring/return	3	2	⑭	Ⓒ	㉓	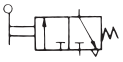
Direct acting normally open lever/spring/return	3	2	⑭	Ⓓ	㉓	
Direct acting lever with detent	2	2	⑭	Ⓐ	③	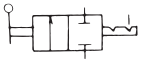
Direct acting lever with detent	3	2	⑭	Ⓒ	③	③Detent item 1 (c) ④Latch item 1 (c) Generally, key selector valve
Direct acting lever with latch	2	2	⑭	Ⓐ	④	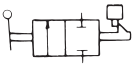
Direct acting lever with latch	3	2	⑭	Ⓒ	④	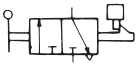
Direct acting normally closed pedal/spring/return (foot valve)	2	2	⑮	Ⓐ	㉓	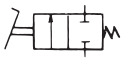
Direct acting normally open pedal/spring/return	2	2	⑮	Ⓑ	㉓	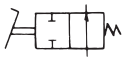
Direct acting normally closed pedal	3	2	⑮	Ⓒ	㉓	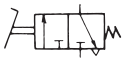
Direct acting normally open pedal	3	2	⑮	Ⓓ	㉓	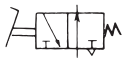
Direct acting double pedal (foot valve for both feet)	2	2	⑯	Ⓐ		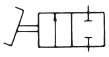
Direct acting double pedal (foot valve for both feet)	3	2	⑯	Ⓒ		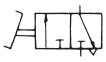
Direct acting push button spring/return	4	2	⑪	Ⓔ	㉓	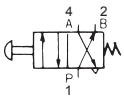
Direct acting push button spring/return	5	2	⑪	Ⓕ	㉓	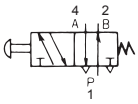

Name			Combination symbol			Symbol
Basic and operating method	No. of Ports	No. of Positions	Operation mech	Basic	Operation mech	
Direct acting both sides operation push button	4	2	⑪	Ⓔ	⑪	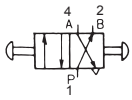
Direct acting both sides operation push button	5	2	⑪	Ⓕ	⑪	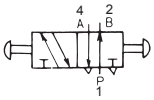
Direct acting push/pull button	4	2	⑬	Ⓔ		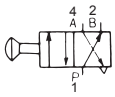
Direct acting push/pull button	5	2	⑬	Ⓕ		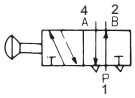
Direct acting closed center with lever/detent	4	3	⑭	Ⓖ	③	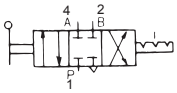
Direct acting closed center with lever/detent	5	3	⑭	Ⓗ	③	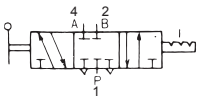
Direct acting pedal spring/return (foot valve)	4	2	⑮	Ⓔ	㉓	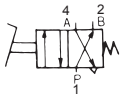
Direct acting pedal spring/return (foot valve)	5	2	⑮	Ⓕ	㉓	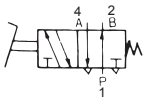
Direct acting double pedal (foot valve)	4	2	⑯	Ⓔ		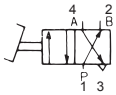
Direct acting double pedal (foot valve)	5	2	⑯	Ⓕ		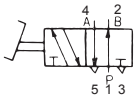
Direct acting double pedal all ports closed with detent	4	3	⑯	Ⓖ	③	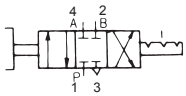
Direct acting double pedal all ports closed with detent	5	3	⑯	Ⓗ	③	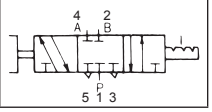

Note) Numerals are as indicated in JISB 8375 (ISO 5599).

(d) Mechanical control valve

Name			Combination symbol			Symbol
Basic and operating method	No. of Ports	No. of Positions	Operation mech	Basic	Operation mech	
Direct acting normally closed plunger spring/return	2	2	㉑	Ⓐ	㉓	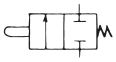
Direct acting normally open plunger spring/return	2	2	㉑	Ⓑ	㉓	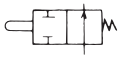

Name			Combination symbol			Symbol
Basic and operating method	No. of Ports	No. of Positions	Operation mech	Basic	Operation mech	
Direct acting normally closed plunger	3	2	㉑	Ⓒ	㉓	
Direct acting normally open plunger	3	2	㉑	Ⓓ	㉓	
Direct acting normally closed roller spring/return	2	2	㉔	Ⓐ	㉓	
Direct acting normally open roller spring/return	2	2	㉔	Ⓑ	㉓	
Direct acting normally closed roller spring/return	3	2	㉔	Ⓒ	㉓	
Direct acting normally open roller spring/return	3	2	㉔	Ⓓ	㉓	
Direct acting normally closed single roller spring/return	2	2	㉕	Ⓐ	㉓	
Direct acting normally open single roller spring/return	2	2	㉕	Ⓑ	㉓	
Direct acting normally closed single roller spring/return	3	2	㉕	Ⓒ	㉓	
Direct acting normally open single roller spring/return	3	2	㉕	Ⓓ	㉓	

(e) Pilot operated valve

Name			Combination symbol			Symbol
Basic and operating method	No. of Ports	No. of Positions	Operation mech	Basic	Operation mech	
Direct acting pilot normally closed spring/return	2	2	㊶	Ⓐ	㉓	
Direct acting pilot normally open spring/return	2	2	㊶	Ⓑ	㉓	
Direct acting pilot normally closed spring/return	3	2	㊶	Ⓒ	㉓	
Direct acting pilot normally open pilot	3	2	㊶	Ⓓ	㉓	

Name			Combination symbol			Symbol
Basic and operating method	No. of Ports	No. of Positions	Operation mech	Basic	Operation mech	
Direct acting both sides pilot	2	2	㊶	Ⓐ	㊶	
Direct acting both sides pilot	3	2	㊶	Ⓒ	㊶	
Direct acting pilot spring/return	4	2	㊶	Ⓔ	㉓	
Direct acting pilot spring/return	5	2	㊶	Ⓕ	㉓	
Direct acting both sides pilot	4	2	㊶	Ⓔ	㊶	
Direct acting both sides pilot	5	2	㊶	Ⓕ	㊶	
Direct acting all ports closed both sides pilot spring/center	4	3	㊶ ㉓	Ⓖ	㊶ ㉓	
Direct acting all ports closed both sides pilot spring/center	5	3	㊶ ㉓	Ⓗ	㊶ ㉓	
Direct acting A/B/R connection both sides pilot spring/center						
Direct acting both sides pilot A/B/R connection spring/center						
Direct acting P/A/B connection both sides pilot spring/center						*
Direct acting P/A/B connection both sides pilot spring/center						
						* The basic valve's operation symbol located in the center position can be written on the diagram with a projection line from the center position of the basic valve. Example
Indirect operation normally closed pilot spring/return						

Note) Numerals are as indicated in JISB 8375 (ISO 5599).

(f) Check valve, shuttle valve, exhaust valve

Name	Combination symbol			Symbol (Detailed and simplified symbol)	No.
	Operation mech	Basic	Operation mech		
Check valve without spring	㊸	Ⓐ	㊸	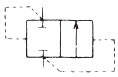 Simplified symbol	ⓐ
Check valve with spring	㊸ ㉓	Ⓐ	㊸	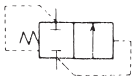 Simplified symbol	ⓐ'
Pilot operation check valve	㊶ ㊸	Ⓐ	㊸	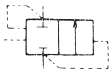 Valve is closed by external pilot Simplified symbol	ⓑ
High pressure priority shuttle valve	㊸	Ⓒ	㊸	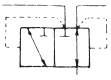 Simplified symbol 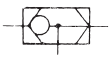	ⓒ
Low pressure priority shuttle valve				 The low pressure inlet is connected to the low-pressure priority output, and the high-pressure inlet is closed. Simplified symbol 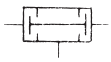	ⓓ
Quick manual valve				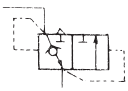 Simplified symbol 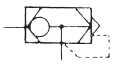	ⓔ

(g) Solenoid valve

Name			Combination symbol			Symbol
Basic and operating method	No. of Ports	No. of Positions	Operation mechanism	Basic	Operation mechanism	
Direct acting normally closed Single acting solenoid spring/return	2	2	㉛	Ⓐ	㉓	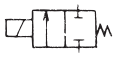
Direct acting normally open Single acting solenoid spring/return	2	2	㉛	Ⓑ	㉓	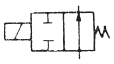
Direct acting normally closed single acting solenoid	3	2	㉛	Ⓒ	㉓	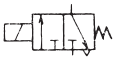
Direct acting normally open single acting solenoid	3	2	㉛	Ⓓ	㉓	
Direct acting both sides solenoid	2	2	㉛	Ⓐ	㉛	
Direct acting both sides solenoid	3	2	㉛	Ⓒ	㉛	
Direct acting double acting solenoid (*)Use when the relationship to the electric signal need not be indicated.	3	2	㉜	Ⓒ		(*) (*)Position and functions of valving element are specified.
Direct acting Single acting solenoid	4	2	㉛	Ⓔ	㉓	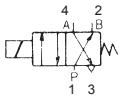
Direct acting Single acting solenoid	5	2	㉛	Ⓕ	㉓	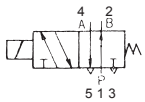
Indirect operation Single acting solenoid spring/return (*)Pressure/return	4	2	㊱	Ⓔ	㉓ ㊸	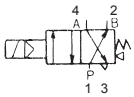
Indirect operation Single acting solenoid spring/return (*)Pressure/return	5	2	㊱	Ⓕ	㉓	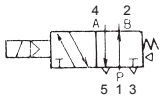 (*)For the pressure and return operation symbols, indicate the functional element equilateral triangle at the edge.
Direct acting both sides solenoid	4	2	㉛	Ⓔ	㉛	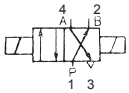

Note) Numerals are as indicated in JISB 8375 (ISO 5599).

JIS

Name			Combination symbol			Symbol
Basic and operating method	No. of Ports	No. of Positions	Operation mechanism	Basic	Operation mechanism	
Direct acting double acting solenoid	4	2	㉜	Ⓔ		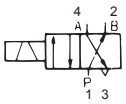 ㊟As stated above, JIS stipulates use if the relationship to the electrical signal need not be indicated. If this is clear, ㉜ can be indicated as an abbreviation of ㉛-◯-㉛.
Direct acting both sides solenoid	5	2	㉛	Ⓕ	㉛	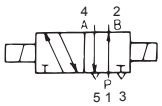
Direct acting double acting solenoid	5	2	㉜	Ⓕ		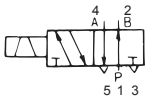
Indirect operation both sides solenoid	4	2	㊱	Ⓔ	㊱	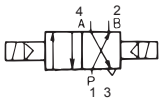
Indirect operation double acting solenoid	4	2	㊲	Ⓔ		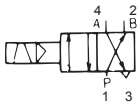
Indirect operation both sides solenoid	5	2	㊱	Ⓕ	㊱	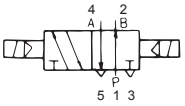
Indirect operation double acting solenoid	5	2	㊲	Ⓕ		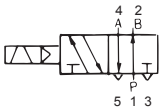
Direct acting all ports closed both sides solenoid spring/pressure centers	4	3	㉛ ㉓	Ⓖ	㉛ ㉓	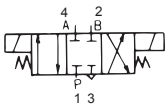
Direct acting all ports closed both sides solenoid spring/pressure centers	5	3	㉛ ㉓	Ⓗ	㉛ ㉓	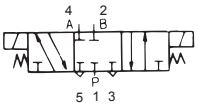
Direct acting A/B/R connection both sides solenoid spring/pressure centers	4	3	㉛ ㉓	Ⓘ	㉛ ㉓	
Direct acting A/B/R connection both sides solenoid spring/pressure centers	5	3	㉛ ㉓	Ⓙ	㉛ ㉓	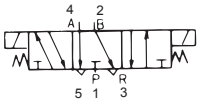
Direct acting P/A/B connection both sides solenoid spring/pressure centers	4	3	㉛	Ⓚ	㉛	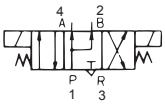

Name			Combination symbol			Symbol
Basic and operating method	No. of Ports	No. of Positions	Operation mechanism	Basic	Operation mechanism	
Direct acting P/A/B both sides solenoid spring/pressure centers used together	5	3	㉛ ㉓㊸	Ⓛ	㉛ ㊸㉓	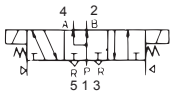
Direct acting P/A/B connection both sides solenoid with manual override			㉛ ⑩ ㉓㊸	Ⓛ	㉛ ⑩ ㊸㉓	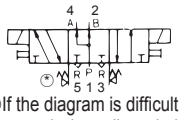 ㊟If the diagram is difficult to read when all symbols are indicated on both ends, separate symbols.
Indirect operation all ports closed both sides solenoid spring/pressure centers	4	3	㊱ ㉓	Ⓖ	㊱ ㉓	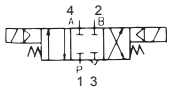
Indirect operation all ports closed both sides solenoid spring/pressure centers	5	3	㊱ ㉓㊸	Ⓗ	㊱ ㉓	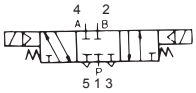
Indirect operation A/B/R connection Both sides solenoid spring/pressure centers used together	4	3	㊱ ㉓㊸	Ⓘ	㊱ ㊸㉓	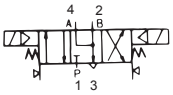
Indirect operation A/B/R connection Both sides solenoid spring/pressure centers used together	5	3	㊱ ㉓㊸	Ⓙ	㊱ ㊸㉓	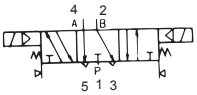
Indirect operation P/A/B connection Both sides solenoid spring/pressure center pilot with manual override	4	3	㊱ ⑩ ㉓	Ⓚ	㊱ ⑩ ㉓	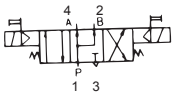
Indirect operation P/A/B connection Both sides solenoid spring/pressure center with manual override	5	3	㊱ ⑩ ㉓	Ⓛ	㊱ ⑩ ㉓	

Note) Numerals are as indicated in JISB 8375 (ISO 5599).

Ending

Name			Combination symbol			Symbol
Basic and operating method	No. of Ports	No. of Positions	Operation mechanism	Basic	Operation mechanism	
(Proportional control valve) Direct acting solenoid proportional flow rate control valve	2		33	A	23	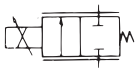
Direct acting solenoid proportional flow rate control valve	3		33	C	23	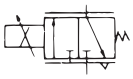
(Servo valve) Direct acting solenoid servo control spring/center	4		34 23	G	23	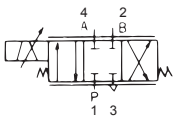
Direct acting Solenoid servo control spring/center	5		36 23	H	23	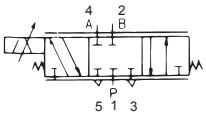

Note) Numerals are as indicated in JISB 8375 (ISO 5599).

4. Pressure control valve

Name	Symbol	Remarks
Relief valve	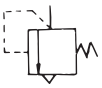	Direct acting or general symbol
Pilot operation relief valve	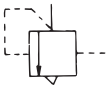	
Regulator	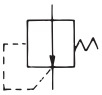	Non-relief
Regulator with relief	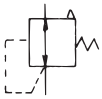	
Pilot operation regulator	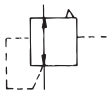	
Regulator with filter	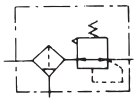	
Regulator with check valve	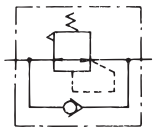	
Sequence valve	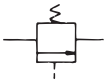	
Proportional electromagnetic pressure control valve		

5. Flow rate control valve

Name	Symbol	Remarks
Metering valve Variable metering valve	Detailed symbol Simplified symbol 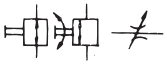	· The simplified symbols do not indicate the operation method or valve state. · Normally, there is no completely closed status
Stop valve		
Speed control valve		· Variable metering valve · One direction is free flow, while the other direction is controlled flow
Metering valve		
Metering valve with silencer	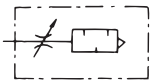	

6. Cylinder and motor

Name	Symbol	Remarks
Single acting cylinder	Detailed symbol Simplified symbol	· Push type · Single rod · Exhaust to atmosphere
Single acting cylinder (with spring)	(1) (2) 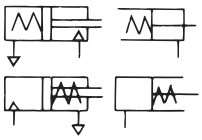	· Single rod (1) Rod pushed by spring force (2) Rod retracted by spring force
Double acting cylinder	(1) (2) 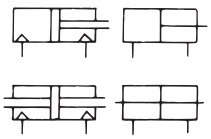	(1) Single rod (2) Double rod
Double acting telescopic cylinder	◎ 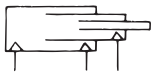	
Cylinder with adjustable stroke (head side) Cylinder with adjustable stroke (rod side)	◎ 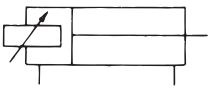 ◎ 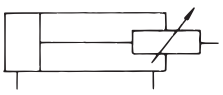	Reference In accordance with JIS B 8368 usage. In JIS B 0142:1984, the head side is the cap side and the rod side is the head side.
Cylinder with speed control valve	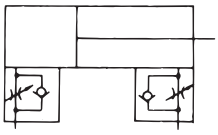	· Example of meter-out

Name	Symbol	Remarks
Cylinder with brake	◎	· Describe the braking method if required.
Cylinder with end lock	(1)◎ (2)◎	* Symbol showing how to release (1) Head side (2) Rod side Note: In accordance with JIS B 8368:1999 usage.
Cylinder with switch	◎	· Specify a and b contacts a b
Rotation-stop cylinder	◎	
Rodless cylinder	◎	
Cylinder with valve		· Example of push type during energizing
Air motor		· 1-direction flow · 1 direction rotation · 2-direction flow · 2 direction rotation
Oscillating actuator		· Pneumatic pressure · Constant angle · 2-direction oscillation · Drawings of arrows to indicate relationship of the shaft rotating direction and flow direction are optional.

7. Power and tank

Name	Symbol	Remarks
Hydraulic (power) source		· General symbols
Pneumatic (power) source		· General symbols
Electric motor	M	
Driving motor	M	(Excluding electric motor)
Air receiver		

8. Air adjustment component

Name	Symbol	Remarks
Filter	(1) (2) (3)	(1) General symbols (2) With magnet (3) With clogging display
Filter with drain discharger	(1) (2)	(1) Manual discharge (2) Automatic discharge
Oil mist separator	(1) (2)	(1) Manual discharge (2) Automatic discharge
Micro mist separator	(1) ◎ (2) ◎ (3) ◎	(1) Manual discharge (2) Automatic discharge (3) Deodorization filter
Drain discharger	(1) (2)	(1) Manual discharge (2) Automatic discharge
Air dryer		
Heat exchanger Cooler	(1) (2) (3)	(1) Water cooling (when coolant piping path is not displayed) (2) Water cooling (when coolant piping path is displayed) (3) Air cooling

Name	Symbol	Remarks
Lubricator		All volume Selection
Pneumatic adjustment unit	Simplified symbol 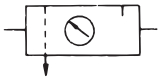 Detailed symbol 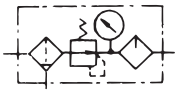	The vertical arrow indicates a discharger. Detailed symbol shows · Filter with manual exhaust valve · Non-relief regulator · An example of the all-volume lubricator
Oil mist separator for exhaust	◎ 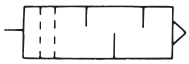	
Noise reduction device	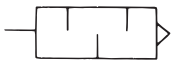	
Oil injector	◎ 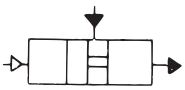	

9. Auxiliary components and other components

Name	Symbol	Remarks
Pneumatic - hydraulic converter	(1) 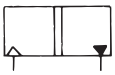 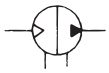	(1) Single acting (2) Continuous type
Booster	(1) 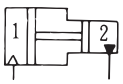 (2) 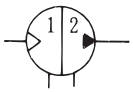	· For pressure ratio 1:2 · For Class 2 fluids (1) Single acting (2) Continuous type
Booster valve	◎	Pressure ratio 1:2
Delay valve	(Example) 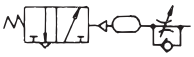	· Indicate with a compound symbol based on the mechanism
Buzzer	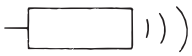	
Pressure switch	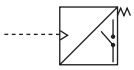	Can be indicated as follows if there is no chance for it to be misread: 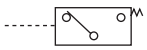

Name	Symbol	Remarks
Limit switch	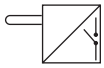	Can be indicated as follows if drawing could not be misread: 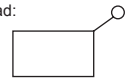
Air ejector	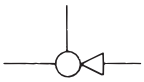	· As defined in JIS Z 8207
Pneumatic counter	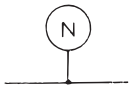	
Pressure display		· Simple display without measurement
Pressure gauge		
Differential pressure gauge		
Thermometer		
Galvanoscope		
Flow rate meter	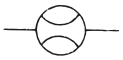	
Integrating flow gauge	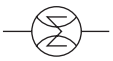	
Rotation speed gauge	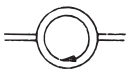	
Torque gauge	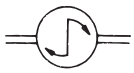	

(Refer to JISB0125-1:2001 and JPAS010)
Note: The ◎ mark indicates codes specific to JPAS010. Application is limited to those indicated.

CE Marking

CKD, with a wide range of EU Standards compliant components, supports customers' machine products to attain CE marking.

: Shown on EU Standards compliant products

What is CE Marking?

- CE Marking certifies that the product satisfies all EC Directive requirements which it is subject to.
- CE Marking serves as a product passport that allows products with CE Marking to be freely distributed in EU countries.
- Machines exported to the EU must comply with Machinery Directives, EMC Directives and Low-Voltage Directives, etc. In principle, CE Marking must be indicated on the final product marketed; therefore, as a rule, built-in components do not require CE Markings. If compliance of built-in parts (CKD products) with EU Standards can be verified, CE Marking of the final product (customer's machine product) can be easily obtained.

Applicable EC Directives

CKD's main components, such as solenoid valves, sensors, and direct drive actuator, are called on to comply with the Directives below. Many models already comply with EU Standards.

Directive	Requirement	Application
Machinery Directive (2006/42/EC)	Requirements on safety for machinery	■ Machines with drive sections Components such as solenoid valves are not subject to this compliance, but the user can obtain CE Marking certification more easily by complying with Standards.
EMC Directive (2014/30/ EU)	Electromagnetic interference generation (EMI emission) and electromagnetic interference elimination performance countermeasures (EMS immunity)	■ Devices generating electromagnetic interference or affected by electromagnetic interference Solenoid valves composed of a simple solenoid are not affected by electromagnetic interference, but the user can obtain CE Marking certification more easily by complying with Standards.
Low-Voltage Directive (2014/35/EU)	Electrical safety with regard to electric shock, etc.	■ Devices operating at 50 VAC to 1000 VAC and 75 VDC to 1500 VDC
Pressure Equipment Directive (2014/68/EU)	Safety regarding the dangers of fluid energy found in pressure equipment	■ When specific criteria are exceeded within pressure equipment
Simple Pressure Vessels Directive (2014/29/ EU)	Safety with regard to vessel leakage and explosion	■ Containers welded and for which total max. working pressure and volume (PV/S) exceeds 50 bar/liter The CKD air tank (AT) does not comply with this directive, and cannot be exported to the EU.
RoHS Directive (2011/65/ EU)	Environmentally active 6 restricted substances	■ Electrical and electronics devices
2011/65/EU and (EU)2015/863	Environmentally active 10 restricted substances	■ Electrical and electronics devices

CE marking is applicable for the European Union (EU) countries and European Free Trade Association (EFTA) countries, in addition to Turkey.

CKD product conformity to EU standards

⚠ Depending on specifications and detailed model No. combinations, compatible parts may not be available. Contact your CKD Sales Representative for details.
Visit our website for the latest information.
Website address https://www.ckd.co.jp/en/support/eu/

CKD RoHS **Compliance**

CKD's target is to develop environmentally friendly products.

RoHS

RoHS is the abbreviation for Restriction of the use of certain Hazardous Substances in electrical and electronic equipment.
This is the directive prohibiting use of certain hazardous substances issued by the EU.

- CKD products are approved as in conformity to RoHS directives in order of priority from July 1, 2006.
- RoHS-compliant products are designed to reduce environmental load and can be distributed in the EU countries.

CKD **Environment Policy**

Based on the CKD Environment Policy enacted in 2001, CKD has been promoting company-wide environment management activities to protect the global environment.

CKD Environment Policy

1. Development and sales of low-environmental load products
2. Reduction of environmental pollutants
3. Promotion of energy and resource saving
4. Reduction of waste

CKD's Compliance with RoHS

From July 2006, we have sequentially enforced RoHS compliance of our Component's major products. This catalog shows RoHS-compliant products with the "RoHS-compliant" mark.

(Note) Check our website for the latest supported Status.

Technical data

RoHS Directive

(Directive 2011/65/EU of 27 January 2003 on the restriction of the use of certain hazardous substances in electrical and electronic equipment)

This directive assimilates laws related to limiting the use of hazardous substances in electrical and electronics components set forth by each EU member state, contributes to the protection of human health, and provides sufficient means for processing and recycling waste electrical and electric products.

1 Scope of application

1. Large appliances
2. Small appliances
3. IT equipment and telecommunications equipment
4. Consumer components
5. Lighting equipment
6. Electric tools
7. Toys, leisure and sports components
8. MEDICAL Component, IN-VITRO DIAGNOSTIC MEDICAL Component
9. MONITORING AND CONTROL Component, AND INDUSTRIAL MONITORING AND CONTROL DEVICE
10. Vending machines
11. Other electrical and electronic components

CKD Component products mainly fall under category 9, industrial monitoring and control equipment. (Some category 8 medical components and non-applicable products are also available)

2 Objective

Restricted substances (2011/65/EU)

- Lead, mercury, cadmium, hexavalent chromium, polybrominated biphenyls (PBBs)
- Polybrominated diphenyl ethers (PBDE)

Substances subject to additional regulation ((EU) 2015/863)

- Specified phthalates (DEHP, DBP, BBP, DIBP)

Category 8 and 9 electrical and electronic components containing any of the above will start from July 22, 2021. From July 22, 2019 on, categories other than 8 and 9 are generally prohibited from entering the EU.

ISO9001/ISO14001 Certification

Providing safe quality, friendly to users, machines and environment.

CKD has acquired International Standard ISO9001 and ISO14001 certification and structured a quality and environment management system.
With safety, environment and energy conservation as our most important priorities, we are working company-wide to promote safe product and quality creation friendly to users, machines, society and the global environment.

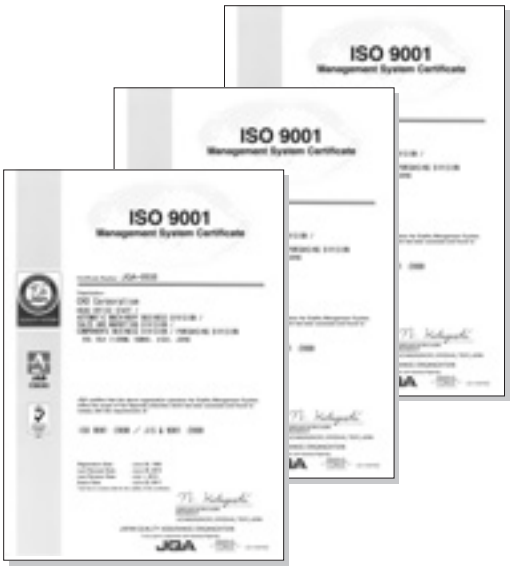

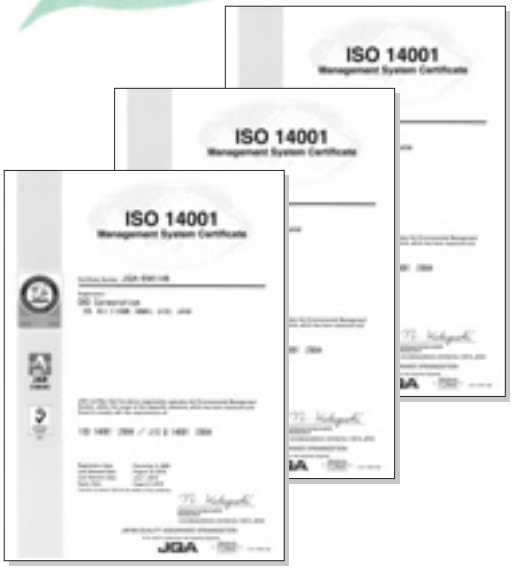

International Standard ISO9001 Certification

International Standard for quality management systems.

CKD's production division acquired certification in 1994, and all CKD divisions, including the sales division, acquired certification in 2007.

Approach to quality system

To respond to diverse product needs, CKD develops user-friendly products individualized for each industry. We conduct quality management activities to increase customer satisfaction.

International Standard ISO14001 Certification

International Standard for environment management systems. CKD's production division acquired certification in 2000, and all CKD divisions, including the sales division, acquired certification in 2003.

Approach to environment and energy conservation

CKD is aware that preserving the global environment is an utmost priority. We conduct environmental management activities based on the CKD Environment Policy.

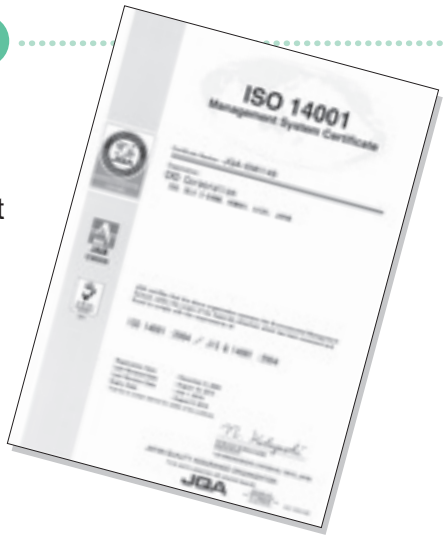

MEMO

MEMO

MEMO

MEMO

Model No. [index in alphabetical order]

Model No.	Model	Catalog No./page
HS	Motorized valve for gas combustion system	1024
HSV	Ⓢ Manual selector valve/standard	CB-023SA

■ Listed catalog No.

CB-029SA ... Pneumatic Cylinders I
CB-030SA ... Pneumatic Cylinders II
CB-023SA ... Pneumatic Valves
CB-024SA ... Pneumatic, Vacuum and Auxiliary Components
CB-03-1SA ... General Purpose Valves

■ Page

Specifications/model No. pages for the models listed in this catalog.

■ Codes (pneumatic valves and general purpose valves)

Ⓓ... Discrete valves
Ⓘ... Individual wiring manifolds
Ⓑ... Block manifolds
Ⓡ... Reduced wiring manifolds
Ⓧ... Mix manifolds
Ⓜ... Manifolds

Model No.	Model	Catalog No./page
1		
1219	Micro alescer/micro naught (oil removal)	CB-024SA
1238	Micro alescer/micro naught (oil removal)	CB-024SA
1326	Heavy duty air filter	CB-024SA
1126 -*-*Y	Submicron air filter (for tar removal)	CB-024SA
1126-*-E	Air filter	CB-024SA
1138 -*-*Y	Submicron air filter (for tar removal)	CB-024SA
1138-*-E	Air filter	CB-024SA
1226 (J)	Micro alescer/micro naught (oil removal)	CB-024SA
1226 (J) -*-X	Micro alescer/odor naught (odor removal)	CB-024SA
1238-*-X	Micro alescer/odor naught (odor removal)	CB-024SA
1326 -*-*Y	Submicron air filter (for tar removal)	CB-024SA
2		
2215	Regulator	CB-024SA
2216	Regulator	CB-024SA
2302 to 2304-*C	Dial air regulator	CB-024SA
2302 to 2304-*C-R	Remote dial air regulator	CB-024SA
2415	Reverse regulator (check valve integrated)	CB-024SA
2419	Reverse regulator (check valve integrated)	CB-024SA
2619	Regulator	CB-024SA
2QV	Quick valve with push-in fitting	CB-024SA
3		
3003E to 3005E	Lubricator/econo-mist	CB-024SA
3003E-*C-V	Lubricator/auto-fill	CB-024SA
3GA1/2/3	Ⓓ Pilot operated 3-port valve/ body piping	CB-023SA
3GA1/2/3	Ⓓ Pilot operated 3-port valve (Master valve)/body piping	CB-023SA
3GB1/2	Ⓓ Pilot operated two 3-port valves integrated/base piping	CB-023SA
3GD1/2/3	Ⓓ Pilot operated 3-port valve/ body piping	CB-023SA
3GD1/2*0EJ	Ⓓ Intrinsically safe explosion-proof pilot operated 3-port valve/body piping	CB-023SA
3GE1/2	Ⓓ Pilot operated two 3-port valves integrated/base piping	CB-023SA
3GE1/2*0EJ	Ⓓ Intrinsically safe explosion-proof pilot operated 3-port valve/base piping	CB-023SA
3KA1	Ⓓ Pilot operated 3-port valve/ body piping	CB-023SA
3KA1	Ⓓ Pilot operated 3-port valve (Master valve)/body piping	CB-023SA
3MA0	Ⓓ Direct acting 3-port valve/ Body piping	CB-023SA
3MB0	Ⓓ Direct acting 3-port valve/ Sub-plate piping	CB-023SA
3PA1/2	Ⓓ Direct acting 3-port valve/ Body piping	CB-023SA
3PB1/2	Ⓓ Direct acting 3-port valve/ Sub-plate piping	CB-023SA
3QB1	Ⓓ Direct acting 3-port valve/ Sub-plate piping	CB-023SA
3QE1	Ⓓ Direct acting 3-port valve/ Sub-plate piping	CB-023SA
3QRA1	Ⓓ Direct acting 3-port valve/ Body piping	CB-023SA
3QRB1	Ⓓ Direct acting 3-port valve/ Sub-plate piping	CB-023SA
3QV	Quick valve with push-in fitting	CB-024SA

4

4001, 4002	Desiccant air dryer/ Manual air dryer	CB-024SA
46011	Urethane tube	CB-024SA
4F0/1/2/3	Ⓓ Pilot operated 5-port valve/ body piping	CB-023SA
4F0/1/2/3	Ⓓ Pilot operated 5-port valve (Master valve)/body piping	CB-023SA
4F2/3	Ⓓ Pilot operated 5-port valve, outdoor type	CB-023SA
4F30EX**	Ⓓ Explosion-proof pilot operated 5-port valve/body piping	CB-023SA
4F30E**	Ⓓ Explosion-proof pilot operated 5-port valve/body piping	CB-023SA
4F4/5/6/7	Ⓓ Pilot operated 5-port valve/ sub-plate piping	CB-023SA
4F4/5/6/7	Ⓓ Pilot operated 5-port valve (Master valve)/sub-plate piping	CB-023SA
4F4/5/6/70EX**	Ⓓ Explosion-proof pilot operated 5-port valve/body piping	CB-023SA
4F4/5/6/70E**	Ⓓ Explosion-proof pilot operated 5-port valve/sub-plate piping	CB-023SA
4GA1/2/3	Ⓓ Pilot operated 5-port valve/ body piping	CB-023SA
4GA1/2/3	Ⓓ Pilot operated 5-port valve (Master valve)/body piping	CB-023SA
4GA4	Ⓓ Pilot operated 5-port valve/ body piping	CB-023SA
4GB1/2/3	Ⓓ Pilot operated 5-port valve/ base piping	CB-023SA
4GB1/2/3	Ⓓ Pilot operated 5-port valve (Master valve)/base piping	CB-023SA
4GB4	Ⓓ Pilot operated 5-port valve/ base piping	CB-023SA
4GD1/2/3	Ⓓ Pilot operated 5-port valve/ body piping	CB-023SA
4GD1/2/3/4*0EJ	Ⓓ Intrinsically safe explosion-proof pilot operated 5-port valve/body piping	CB-023SA
4GE1/2/3	Ⓓ Pilot operated 5-port valve/ base piping	CB-023SA
4GE1/2/3/4*0EJ	Ⓓ Intrinsically safe explosion-proof pilot operated 5-port valve/base piping	CB-023SA
4KA1/2/3/4	Ⓓ Pilot operated 5-port valve Body piping	CB-023SA
4KA1/2/3/4	Ⓓ Pilot operated 5-port valve (Master valve)/body piping	CB-023SA
4KB1/2/3/4	Ⓓ Pilot operated 5-port valve/ sub-plate piping	CB-023SA
4KB1/2/3/4	Ⓓ pilot operated 4, 5-port valve (Master valve)/sub-plate piping	CB-023SA
4SA0	Ⓓ Pilot operated 5-port valve/ body piping	CB-023SA
4SB0	Ⓓ Pilot operated 5-port valve/ sub-plate piping	CB-023SA

5

5100-4C	Heavy duty drain	CB-024SA

6

6119	Moisture indicator	CB-024SA

A

A	Marine cable gland	CB-03-1SA
A100 to 800-W	Piping adapter/Standard White Series	CB-024SA
A101 to 801-W	Radial piping adapter/Standard White Series	CB-024SA
A1019	Air filter	CB-024SA
A1338	Heavy duty air filter	CB-024SA
A1338-*Y	Submicron air filter (for tar removal)	CB-024SA
A2-3400	Ultra-low temperature 2-port solenoid valve	CB-03-1SA
A2-5201	Direct acting 2-port solenoid valve (for high frequency of use)	CB-03-1SA
A2-5202	Pilot operated 2-port solenoid valve (for high frequency of use)	CB-03-1SA
A2-5800	Ultra-low temperature 2-port solenoid valve	CB-03-1SA
A2-6500	Proportional control valve	CB-03-1SA
A3019	Lubricator/econo-mist	CB-024SA
AB21	Direct acting 2-port solenoid valve (General purpose)	CB-03-1SA
AB31	Direct acting 2-port solenoid valve, single unit (General purpose)	CB-03-1SA
AB31-Z	Direct acting 2-port solenoid valve for dry air (General purpose)	CB-03-1SA
AB41	Direct acting 2-port solenoid valve, single unit (General purpose)	CB-03-1SA
AB41E2	Explosion-proof direct acting 2-port solenoid valve (General purpose)/d2G2	CB-03-1SA

Model No. [index in alphabetical order]

Model No.	Model	Catalog No./page
A		
AB41E4	Explosion-proof direct acting 2-port solenoid valve (General purpose)/d2G4	CB-03-1SA
AB41E4-Z	Explosion-proof direct acting 2-port solenoid valve for dry air (General purpose)/d2G4	CB-03-1SA
AB41EX2	Explosion-proof direct acting 2-port solenoid valve (General purpose)/Exd II BT2	CB-03-1SA
AB41EX4	Explosion-proof direct acting 2-port solenoid valve (General purpose)/Exd II BT4	CB-03-1SA
AB41-Z	Direct acting 2-port solenoid valve for dry air (General purpose)	CB-03-1SA
AB42	Direct acting 2-port solenoid valve, single unit (General purpose)	CB-03-1SA
AB42E4	Explosion-proof direct acting 2-port solenoid valve (General purpose)/d2G4	CB-03-1SA
AB71	Direct acting 2-port solenoid valve (General purpose)/Large bore size	CB-03-1SA
ABP	Air booster	CB-024SA
AD11	Pilot operated 2-port solenoid valve (General purpose)/Diaphragm drive	CB-03-1SA
AD11E4	Explosion-proof pilot operated 2-port solenoid valve (General purpose)/Diaphragm drive/d2G4	CB-03-1SA
AD11EX4	Explosion-proof pilot operated 2-port solenoid valve (General purpose)/Diaphragm drive/Exd II BT4	CB-03-1SA
AD12	Pilot operated 2-port solenoid valve (General purpose)/diaphragm drive	CB-03-1SA
AD12E4	Explosion-proof pilot operated 2-port solenoid valve (General purpose)/diaphragm drive/d2G4	CB-03-1SA
AD21	Pilot operated 2-port solenoid valve (General purpose)/Diaphragm drive	CB-03-1SA
AD21E4	Explosion-proof pilot operated 2-port solenoid valve (General purpose)/diaphragm drive/d2G4	CB-03-1SA
AD21EX4	Explosion-proof pilot operated 2-port solenoid valve (General purpose)/Diaphragm drive/Exd II BT4	CB-03-1SA
AD22	Pilot operated 2-port solenoid valve (General purpose)/Diaphragm drive	CB-03-1SA
AD22E4	Explosion-proof pilot operated 2-port solenoid valve (General purpose)/Diaphragm drive/d2G4	CB-03-1SA
ADK11	Pilot kick operated 2-port solenoid valve (General purpose)/Diaphragm drive	CB-03-1SA
ADK11-W	Pilot kick operated 2-port solenoid valve (General purpose)/Diaphragm drive/Outdoor Series	CB-03-1SA
ADK11E4	Explosion-proof pilot kick operated 2-port solenoid valve (General purpose)/diaphragm drive/d2G4	CB-03-1SA
ADK11EX4	Explosion-proof pilot operated 2-port solenoid valve (General purpose)/Diaphragm drive/Exd II BT4	CB-03-1SA
ADK11-Z	Pilot kick 2-port solenoid valve for dry air (General purpose)	CB-03-1SA
ADK12	Pilot kick operated 2-port solenoid valve (General purpose)/diaphragm drive	CB-03-1SA
ADK12E4	Explosion-proof pilot kick operated 2-port solenoid valve (General purpose)/diaphragm drive/d2G4	CB-03-1SA
ADK21	Pilot kick operated 2-port solenoid valve (General purpose)/diaphragm drive	CB-03-1SA
AF2-P**	Medium main line filter/ Solids/oil removing filter	CB-024SA
AF2-M**	Medium main line filter/ High-performance solids/oil removing filter	CB-024SA
AF2-X**	Medium main line filter/ /Odor removal filter	CB-024SA
AF3016M to 3256M	Large main line filter (popular)/ High-performance oil removing filter	CB-024SA
AF3016P to 3256P	Large main line filter (popular)/ Pre-filter	CB-024SA
AF3016S to 3256S	Large main line filter (popular)/ Oil removing filter	CB-024SA
AF3016X to 3256X	Large main line filter (popular)/ Activated carbon filter	CB-024SA
AF4004M to AF4020M	Medium main line filter (oil-prohibited)/ High-performance oil removing filter	CB-024SA
AF4004P to AF4020P	Medium main line filter (oil-prohibited)/ Pre-filter	CB-024SA
AF4004S to AF4020S	Medium main line filter (oil-prohibited)/ Solid removing filter	CB-024SA
AF4004X to AF4020X	Medium main line filter (oil-prohibited)/ Odor removal filter	CB-024SA
AF5016M to 5256M	Large main line filter (oil-prohibited)/ High-performance oil removing filter	CB-024SA
AF5016P to 5256P	Large main line filter (oil-prohibited)/ Pre-filter	CB-024SA
AF5016S to 5256S	Large main line filter (oil-prohibited)/ Oil removing filter	CB-024SA
AF5016X to 5256X	Large main line filter (oil-prohibited)/ Activated carbon filter	CB-024SA
AG3*-Z	Direct acting 3-port solenoid valve for dry air (General purpose)	CB-03-1SA
AG31	Direct acting 3-port solenoid valve, single unit (General purpose)	CB-03-1SA
AG33	Direct acting 3-port solenoid valve, single unit (General purpose)	CB-03-1SA

AG34	Direct acting 3-port solenoid valve, single unit (General purpose)	CB-03-1SA
AG4*E4-Z	Explosion-proof direct acting 3-port solenoid valve for dry air (General purpose)/d2G4	CB-03-1SA
AG4*-Z	Direct acting 3-port solenoid valve for dry air (General purpose)	CB-03-1SA
AG41	Direct acting 3-port solenoid valve, single unit (General purpose)	CB-03-1SA
AG41E4	Explosion-proof direct acting 3-port solenoid valve (General purpose)/d2G4	CB-03-1SA
AG41EX4	Explosion-proof direct acting 3-port solenoid valve (General purpose)/Exd II BT4	CB-03-1SA
AG43	Direct acting 3-port solenoid valve, single unit (General purpose)	CB-03-1SA
AG43E4	Explosion-proof direct acting 3-port solenoid valve (General purpose)/d2G4	CB-03-1SA
AG43EX4	Explosion-proof direct acting 3-port solenoid valve (General purpose)/Exd II BT4	CB-03-1SA
AG44	Direct acting 3-port solenoid valve, single unit (General purpose)	CB-03-1SA
AG44E4	Explosion-proof direct acting 3-port solenoid valve (General purpose)/d2G4	CB-03-1SA
AG44EX4	Explosion-proof direct acting 3-port solenoid valve (General purpose)/Exd II BT4	CB-03-1SA
AGD0*R	Air operated valve for process gas	CB-03-1SA
AGD1/2*R	Air operated valve for process gas	CB-03-1SA
AHB	Air hydraulic booster	CB-029SA CB-030SA Ending Page 134
AL	Air lamp/logic valve	CB-024SA
AM4F0	Ⓘ Pilot operated 5-port valve/ body piping	CB-023SA
AMD	Air operated valve for chemical liquids (2-port)	CB-03-1SA
AMD0*3R	Air operated valve for chemical liquids (2-port)	CB-03-1SA
AMD3*3R	Air operated valve for chemical liquids (2-port)	CB-03-1SA
AMD4*3R	Air operated valve for chemical liquids (2-port)	CB-03-1SA
AMD5*3R	Air operated valve for chemical liquids (2-port)	CB-03-1SA
AMD2**	Air operated valve for chemical liquids (2-port)	CB-03-1SA
AMDS	Air operated valve for chemical liquids/drip prevention valve integrated	CB-03-1SA
AMDZ*3R	Air operated valve for chemical liquids (2-port)	CB-03-1SA
AMG	Air operated valve for chemical liquids (3-port)	CB-03-1SA
AMGZ03R	Air operated valve for chemical liquids (3-port valve)	CB-03-1SA
AMS	Drip prevention valve for chemical liquids	CB-03-1SA
AP11	Pilot operated 2-port solenoid valve (General purpose)/Piston drive	CB-03-1SA
AP11E2	Explosion-proof pilot operated 2-port solenoid valve (General purpose)/piston drive/d2G2	CB-03-1SA
AP11E4	Explosion-proof pilot operated 2-port solenoid valve (General purpose)/piston drive/d2G4	CB-03-1SA
AP11EX2	Explosion-proof pilot operated 2-port solenoid valve (General purpose)/piston drive/Exd II BT2	CB-03-1SA
AP11EX4	Explosion-proof pilot operated 2-port solenoid valve (General purpose)/piston drive/Exd II BT4	CB-03-1SA
AP12	Pilot operated 2-port solenoid valve (General purpose)/Piston drive	CB-03-1SA
AP12E2	Explosion-proof pilot operated 2-port solenoid valve (General purpose)/piston drive/d2G2	CB-03-1SA
AP12E4	Explosion-proof pilot operated 2-port solenoid valve (General purpose)/piston drive/d2G4	CB-03-1SA
AP21	Pilot operated 2-port solenoid valve (General purpose)/Piston drive	CB-03-1SA
AP21E2	Explosion-proof pilot operated 2-port solenoid valve (General purpose)/piston drive/d2G2	CB-03-1SA
AP21EX2	Explosion-proof pilot operated 2-port solenoid valve (General purpose)/piston drive/Exd II BT2	CB-03-1SA
AP21E4	Explosion-proof pilot operated 2-port solenoid valve (General purpose)/piston drive/d2G4	CB-03-1SA
AP21EX4	Explosion-proof pilot operated 2-port solenoid valve (General purpose)/piston drive/Exd II BT4	CB-03-1SA
AP22	Pilot operated 2-port solenoid valve (General purpose)/Piston drive	CB-03-1SA
AP22E2	Explosion-proof pilot operated 2-port solenoid valve (General purpose)/piston drive/d2G2	CB-03-1SA
AP22E4	Explosion-proof pilot operated 2-port solenoid valve (General purpose)/piston drive/d2G4	CB-03-1SA
APA1	PEL system/Switching element	CB-024SA
APA3	PEL system/ Switching element/manifold	CB-024SA
APA4	PEL system/detection nozzle	CB-024SA
APA6	Piping instrument/air sensor	CB-024SA

■ Listed catalog No.

CB-029SA ... Pneumatic Cylinders I
CB-030SA ... Pneumatic Cylinders II
CB-023SA ... Pneumatic Valves
CB-024SA ... Pneumatic, Vacuum and Auxiliary Components
CB-03-1SA ... General Purpose Valves

■ Codes (pneumatic valves and general purpose valves)

Ⓓ... Discrete valves
Ⓘ... Individual wiring manifolds
Ⓑ... Block manifolds
Ⓡ... Reduced wiring manifolds
Ⓧ... Mix manifolds
Ⓜ... Manifolds

Model No. [index in alphabetical order]

Model No.	Model	Catalog No./page	
A			
APE	Mechanical pressure switch	CB-024SA	172
APK11	Pilot kick operated 2-port solenoid valve (General purpose)/Piston drive	CB-03-1SA	292
APK21	Pilot kick operated 2-port solenoid valve (General purpose)/Piston drive	CB-03-1SA	300
APS	Reed switch compact mechanical pressure switch	CB-024SA	176
AT	Air tank	CB-024SA	609
AVB**3	Air operated valve for high vacuum	CB-03-1SA	Ending Page 3
AVB**7	Air operated valve for high vacuum	CB-03-1SA	Ending Page 3
AZ	Tube cutter	CB-024SA	902
B			
B	Booster	CB-029SA CB-030SA	Ending Page 134
B*P51*	Ⓘ Pilot operated 2, 3, 5-port valve/metal base	CB-023SA	1654
B110 to 820-W	Bracket/for modular F.R.L./ Standard White Series	CB-024SA	346
B2019	Regulator	CB-024SA	418
B512*	Ⓓ Pilot operated 2-port valve/ sub-base	CB-023SA	1638
B513*	Ⓓ Pilot operated 3-port valve/ sub-base	CB-023SA	1638
B5142	Ⓓ Pilot operated 5-port valve/ sub-base	CB-023SA	1638
B6061	Relief valve	CB-024SA	422
B7019	F.R. unit	CB-024SA	412
BBS-A	Balancer unit, automatic pressure adjustment		1258
BBS-O	Balancer unit, fixed pressure adjustment		1270
BHA	Compact cross roller parallel hand		1600
BHA-FC	Mechanical hand		1884
BHA-LN	Hand with length measuring sensor/ Cross roller parallel hand with sensor		1478
BHE	Centering hand		1752
BHE-LN	Hand with length measuring sensor/Centering hand with sensor		1478
BHG	Compact cross roller parallel hand with rubber cover		1606
BHG-LN	Hand with length measuring sensor/Rubber covered cross roller parallel hand with sensor		1478
BN	Air blow nozzle General	CB-024SA	926
BNB	Air blow nozzle Blower specification	CB-024SA	927
BNE-F	Air blow nozzle Flat	CB-024SA	924
BNE-R	Air blow nozzle Round	CB-024SA	924
BSA2	Miniature cross roller parallel hand		1596
BW7019	Filter/Regulator Outdoor Series	CB-024SA	328
C			
C1000 to 8000-P6	F.R.L. combination/copper and PTFE free series	CB-024SA	312
C1000 to 8000-W	F.R.L. combination/Standard White Series	CB-024SA	34
C1010 to 8010-W	W.L. combination/Standard White Series	CB-024SA	42
C1020 to 8020-W	F.R. combination/Standard White Series	CB-024SA	48
C1030 to 8030-W	F.M.R. combination/Standard White Series	CB-024SA	54
C1040 to 8040-W	W.M. combination/Standard White Series	CB-024SA	60
C1050 to 8050-W	R.M. combination/Standard White Series	CB-024SA	66
C1060 to 8060-W	F.M. combination/Standard White Series	CB-024SA	72
C25N-B	Governor for medium pressure gas	CB-03-1SA	1016
C3070 to 8070-W	F.F.M. combination/Standard White Series	CB-024SA	78
CAC4	Clamp cylinder/double acting/single rod		1008
CAC4-G4	Clamp cylinder/ Double acting/anti-spatter adherence		1020
CAC-N32/40	Lightweight clamp cylinder/ Double acting/single rod		1046
CAT	Cartridge cylinder/single acting, push type	CB-029SA	1340
CAU30	Clean air unit	CB-024SA	
CAV2	Cylinder with valve/ double acting/lubrication	CB-029SA	710
CAV2-N	Cylinder with valve/ double acting/no-lubrication	CB-029SA	710
CCH	Coolant check valve	CB-03-1SA	906
CG	Fiber tube push-in fitting (clean-room)	CB-024SA	890
CHB	Air operated 2-port ball valve (compact rotary valve) /double acting	CB-03-1SA	706
CHBF	Air operated 2-port ball valve (compact rotary valve) /double acting/full bore	CB-03-1SA	706
CHBF-R*	Air operated 2-port ball valve (compact rotary valve) /single acting/full bore	CB-03-1SA	706
CHBF-V*	Air operated 2-port ball valve (compact rotary valve) /With solenoid valve/double acting/full bore	CB-03-1SA	718
CHBF-X*	Air operated 2-port ball valve (compact rotary valve) /With solenoid valve/single acting/full bore	CB-03-1SA	718

CHB-R*	Air operated 2-port ball valve (compact rotary valve) /single acting	CB-03-1SA	
CHB-V*	Air operated 2-port ball valve (compact rotary valve) /With solenoid valve/double acting	CB-03-1SA	
CHB-X*	Air operated 2-port ball valve (compact rotary valve) /With solenoid valve/single acting	CB-03-1SA	
CHB-W	Air operated 2-port ball valve (compact rotary valve) /double acting/Outdoor Series	CB-03-1SA	
CHB-WR*	Air operated 2-port ball valve (compact rotary valve) /single acting/Outdoor Series	CB-03-1SA	
CHB-WV1	Air operated 2-port ball valve (compact rotary valve) /With solenoid valve/double acting / Outdoor Series	CB-03-1SA	
CHB-WX1	Air operated 2-port ball valve (compact rotary valve) /With solenoid valve/single acting / Outdoor Series	CB-03-1SA	
CHC	Auto hand changer		1874
CHG	Air operated 3-port ball valve (compact rotary valve) /double acting	CB-03-1SA	
CHG-R*	Air operated 3-port ball valve (compact rotary valve) /single acting	CB-03-1SA	
CHG-V*	Air operated 3-port ball valve (compact rotary valve) /With solenoid valve/double acting	CB-03-1SA	
CHG-X*	Air operated 3-port ball valve (compact rotary valve) /With solenoid valve/single acting	CB-03-1SA	
CHG-W	Air operated 3-port ball valve (compact rotary valve) /double acting/Outdoor Series	CB-03-1SA	
CHG-WR*	Air operated 3-port ball valve (compact rotary valve) /single acting/Outdoor Series	CB-03-1SA	
CHG-WV1	Air operated 3-port ball valve (compact rotary valve) /With solenoid valve/double acting / Outdoor Series	CB-03-1SA	
CHG-WX1	Air operated 3-port ball valve (compact rotary valve) /With solenoid valve/single acting / Outdoor Series	CB-03-1SA	
CHL	Check valve with push-in fitting	CB-024SA	
CHV2	Check valve	CB-024SA	
CK	3-way jaw long stroke chuck		1820
CKA	3-way jaw thin chuck		1826
CKF	Hollow chuck		1852
CKG	3-way jaw bearing chuck		1814
CKH2	Powerful chuck with high gripping force		1800
CKJ	Ultra long stroke chuck		1858
CKL2	Powerful chuck		1774
CKL2-*-HC	Position locking powerful chuck		1794
CKL2-FC	Mechanical chuck		1886
CKLB2	2-way powerful chuck		1806
CKS	Thin chuck		1834
CKS-F	Slim chuck (hollow)		1844
CKV2	Compact cylinder with valve/ double acting/single rod	CB-029SA	680
CKV2-M	Compact cylinder with valve/ double acting/rotation-stop	CB-029SA	692
CMA2	Medium bore size cylinder/double acting/single rod	CB-029SA	208
CMA2-E	Medium bore size cylinder/double acting/direct mounting	CB-029SA	222
CMK2	Small bore size cylinder/double acting/single rod	CB-029SA	86
CMK2-*C	Small bore size cylinder/double acting/rubber-air cushioned	CB-029SA	128
CMK2-B	Small bore size cylinder/double acting/back to back	CB-029SA	160
CMK2-C	Small bore size cylinder/double acting/air cushioned	CB-029SA	136
CMK2-D	Small bore size cylinder/double acting/double rod	CB-029SA	154
CMK2-F	Small bore size cylinder/double acting/fine speed	CB-029SA	148
CMK2-G2/G3	Small bore size cylinder Double acting/coolant proof	CB-029SA	182
CMK2-H	Small bore size cylinder/double acting/low hydraulic	CB-029SA	178
CMK2-JG2/JG3	Small bore size cylinder/double acting/stainless steel	CB-029SA	188
CMK2-M	Small bore size cylinder/double acting/rotation-stop	CB-029SA	166
CMK2-P	Small bore size cylinder/ Double acting/stroke adjustable/push	CB-029SA	112
CMK2-Q	Small bore size cylinder/double acting/position locking	CB-029SA	142
CMK2-R	Small bore size cylinder/ Double acting/stroke adjustable/pull	CB-029SA	118
CMK2-S	Small bore size cylinder/single acting/push	CB-029SA	100
CMK2-SR	Small bore size cylinder/single acting/pull	CB-029SA	106
CMK2-T	Small bore size cylinder/double acting/heat resistance	CB-029SA	124
CMK2-Z	Small bore size cylinder/ Double acting/built-in speed controller	CB-029SA	172
COV*2	Cylinder with valve/ With valve/double acting/lubrication	CB-029SA	710
COV*2-N	Cylinder with valve/ With valve/double acting/no-lubrication	CB-029SA	710

■ Listed catalog No.

CB-029SA ... Pneumatic Cylinders Ⅰ
CB-030SA ... Pneumatic Cylinders Ⅱ
CB-023SA ... Pneumatic Valves
CB-024SA ... Pneumatic, Vacuum and Auxiliary Components
CB-03-1SA ... General Purpose Valves

■ Codes (pneumatic valves and general purpose valves)

Ⓓ... Discrete valves
Ⓘ... Individual wiring manifolds
Ⓑ... Block manifolds
Ⓡ... Reduced wiring manifolds
Ⓧ... Mix manifolds
Ⓜ... Manifolds

Model No. [index in alphabetical order]

Model No.	Model	Catalog No./page
C		
CPD	Electronic pressure switch for coolant (with digital display)	CB-024SA
CPE	Mechanical pressure switch for coolant (for low pressure)	CB-024SA
CSB	Air operated 2-port ball valve for steam (compact rotary valve)/standard bore	CB-03-1SA
CSBF	Air operated 2-port ball valve for steam (compact rotary valve)/full bore	CB-03-1SA
CSBF-R	Air operated 2-port ball valve for steam (compact rotary valve)/full bore	CB-03-1SA
CSB-R*	Air operated 2-port ball valve for steam (compact rotary valve)/standard bore	CB-03-1SA
CSB-W	Air operated 2-port ball valve for steam (compact rotary valve)/Standard bore/Outdoor Series	CB-03-1SA
CSB-WR*	Air operated 2-port ball valve for steam (compact rotary valve)/Standard bore/Outdoor Series	CB-03-1SA
CV3E	Air operated 3-port valve for low pressure (coolant valve)	CB-03-1SA
CVE2-05/10	Air operated 2-port valve for low pressure (coolant valve)	CB-03-1SA
CVE2-16/30	Air operated 2-port valve for medium pressure (coolant valve)	CB-03-1SA
CVE22-05/10	Air operated 2-port valve for low pressure (coolant valve)	CB-03-1SA
CVE22-16/30	Air operated 2-port valve for medium pressure (coolant valve)	CB-03-1SA
CVE22-70	Air operated 2-port valve for high pressure (coolant valve)	CB-03-1SA
CVE2-70	Air operated 2-port valve for high pressure (coolant valve)	CB-03-1SA
CVE3-35/70	Air operated 3-port valve for medium and high pressure (coolant valve)	CB-03-1SA
CVS3E	Air operated 3-port valve for low pressure (coolant valve)/with solenoid valve	CB-03-1SA
CVSE2-05/10	Air operated 2-port valve for low pressure (coolant valve)/with solenoid valve	CB-03-1SA
CVSE2-15AX039	Air operated 2-port valve with solenoid valve (coolant control)/high pressure coolant valve	CB-03-1SA
CVSE2-16/30	Air operated 2-port valve for medium pressure (coolant valve) /with solenoid valve	CB-03-1SA
CVSE2-20AX040	Air operated 2-port valve with solenoid valve (coolant control)/high pressure coolant valve	CB-03-1SA
CVSE2-25AX041	Air operated 2-port valve with solenoid valve (coolant control)/high pressure coolant valve	CB-03-1SA
CVSE22-05/10	Air operated 2-port valve for low pressure (coolant valve)/with solenoid valve	CB-03-1SA
CVSE22-16/30	Air operated 2-port valve for medium pressure (coolant valve) /with solenoid valve	CB-03-1SA
CVSE22-70	Air operated 2-port valve for high pressure (coolant valve)/with solenoid valve	CB-03-1SA
CVSE2-70	Air operated 2-port valve for high pressure (coolant valve)/with solenoid valve	CB-03-1SA
CVSE3-35/70	Air operated 3-port valve for medium and high pressure (coolant valve) /With solenoid valve	CB-03-1SA
CXU	Air unit	CB-024SA
D		
D101 to 801-W	Distributor/ For modular F.R.L./Standard White Series	CB-024SA
DB1000	Automatic drain	CB-024SA
DB3000	Automatic drain	CB-024SA
DBS1006	Drain sensor	CB-024SA
DPS	Switch	CB-024SA
DSC	Speed controller with adjusting dial	CB-024SA
DSG	Solenoid valve for gas combustion system	CB-03-1SA
DSG-W	Solenoid valve for gas combustion system	CB-03-1SA
DT3000, 3010-W	Automatic drain	CB-024SA
DT4000, 4010-W	Automatic drain	CB-024SA
DVL	Needle valve with adjusting dial	CB-024SA
E		
E0, ET0	Cylinder switch/heat resistance/2-wire reed	CB-029SA CB-030SA Ending Page 26
EH	Fiber tube clean-room type (For push-in fitting)	CB-024SA
EMB21	Metal-free 2-port solenoid valve	CB-03-1SA
EMB41	Metal-free 2-port solenoid valve	CB-03-1SA
EMB51	Metal-free 2-port solenoid valve	CB-03-1SA
EV2100V, 2109V	Electro pneumatic regulator/solenoid valve vacuum compatible	CB-024SA
EVR	Electro pneumatic regulator/solenoid valve medium flow rate	CB-024SA
EVB*17	Electric vacuum valve	CB-03-1SA
EVD	Digital electro pneumatic regulator	CB-024SA
EVL	Low pressure electro pneumatic regulator	CB-024SA
EVS2	Compact electro pneumatic regulator/solenoid valve	CB-024SA
EXA	Pilot operated 2-port solenoid valve for compressed air	CB-03-1SA

F

F*	Soft nylon tube	CB-024SA	
F0V/H	Cylinder switch/1-color LED/ reed 2-wire	CB-029SA CB-030SA Ending Page 22	
F1000 to 8000-P6	Air filter/copper and PTFE free series	CB-024SA	
F1000 to 8000-W	Air filter/Standard White Series	CB-024SA	
F2S, F3S	Cylinder switch/1-color LED/2, 3-wire proximity sensor	CB-029SA CB-030SA Ending Page 22	
F2, 3V/H	Cylinder switch/1-color LED/2, 3-wire proximity sensor	CB-029SA CB-030SA Ending Page 22	
F3PH/V	Cylinder switch/ PNP output 3-wire proximity sensor	CB-029SA CB-030SA Ending Page 22	
F2, 3Y V/H	Cylinder switch/2-color LED/2, 3-wire proximity sensor	CB-029SA CB-030SA Ending Page 22	
F3000 to 8000-G4	Air filter/flame-resistant series	CB-024SA	
FA*	Miniature fitting/adjustable socket	CB-024SA	
FA331 to 831	Exhaust cleaner	CB-024SA	
FAB	Direct acting 2-port solenoid valve for compressed air, single unit (Special purpose)	CB-03-1SA	
FAC	Clean exhaust filter	CB-024SA	
FAG	Direct acting 3-port solenoid valve for compressed air/single unit (Special purpose)	CB-03-1SA	
FBS	Miniature fitting/bush	CB-024SA	
FBU2	Magnetic spring buffer	CB-024SA	
FC*	Miniature fitting/clamp fitting	CB-024SA	
FCD	Flat compact cylinder/double acting/single rod	CB-029SA	1488
FCD-D	Flat compact cylinder/double acting/double rod	CB-029SA	1494
FCD-K	Flat compact cylinder/double acting/cushioned	CB-029SA	1500
FCH	Flat compact cylinder/single acting/pull	CB-029SA	1480
FCK	Shock absorber/adjustable		1924
FCM	Compact flow rate controller	CB-024SA	
FCS	Flat compact cylinder/single acting/push	CB-029SA	1480
FCS1000	Inline clean filter	CB-024SA	
FCS500	Inline clean filter	CB-024SA	
FGB	Direct acting 2-port solenoid valve for dry air, single unit (Special purpose)	CB-03-1SA	
FGB31	Noise reduction special purpose valve (2-port direct acting solenoid valve for compressed air/dry air)	CB-03-1SA	
FGB41	Noise reduction special purpose valve (2-port direct acting solenoid valve for compressed air/dry air)	CB-03-1SA	
FGG	Direct acting 3-port solenoid valve for dry air, single unit (Special purpose)	CB-03-1SA	
FGS	Miniature fitting/gasket	CB-024SA	
FH100	Feather hand (mini-parallel hand)		1590
FH500	Feather hand (mini-fulcrum hand)		1720
FHB	Direct acting 2-port solenoid valve for hot water/single unit (Special purpose)	CB-03-1SA	
FJ	Floating fitting		1948
FK	Simplified floating fitting		1956
FLB	Direct acting 2-port solenoid valve for oil/single unit (Special purpose)	CB-03-1SA	
FLS	Miniature fitting/extension	CB-024SA	
FM*	Miniature fitting/manifold	CB-024SA	
FM3000 to 8000	Air filter/medium pressure series	CB-024SA	
FMD	Flow rate adjusting valve	CB-03-1SA	
FMS	Metering valve with silencer	CB-024SA	
FNS	Miniature fitting/double screw nipple	CB-024SA	
FPL	Miniature fitting/plug	CB-024SA	
FPV	Block valve	CB-024SA	
FS*	Miniature fitting/socket	CB-024SA	
FSL100	Inline filter	CB-024SA	
FSL200	Inline filter	CB-024SA	
FSL500	Inline filter	CB-024SA	
FSM3	Compact flow rate sensor/integrated display/separated display	CB-024SA	
FSM-V	Compact flow rate sensor/ Miniature analog output/switch output	CB-024SA	
FSM-V	Miniature flow rate sensor	CB-024SA	
FSM-V-D	Separated display	CB-024SA	
FSM-VFM	Compact flow rate sensor/inline filter	CB-024SA	
FSM-X	Miniature flow rate switch	CB-024SA	
FT*	Miniature fitting/barbed fitting	CB-024SA	
FVB	Direct acting 2-port solenoid valve for medium vacuum/single unit (Special purpose)	CB-03-1SA	

■ Listed catalog No.

CB-029SA ... Pneumatic Cylinders I
CB-030SA ... Pneumatic Cylinders II
CB-023SA ... Pneumatic Valves
CB-024SA ... Pneumatic, Vacuum and Auxiliary Components
CB-03-1SA ... General Purpose Valves

■ Codes (pneumatic valves and general purpose valves)

Ⓓ... Discrete valves
Ⓘ... Individual wiring manifolds
Ⓑ... Block manifolds
Ⓡ... Reduced wiring manifolds
Ⓧ... Mix manifolds
Ⓜ... Manifolds

Model No. [index in alphabetical order]

Model No.	Model	Catalog No./page
F		
FWB	Direct acting 2-port solenoid valve for water/single unit (Special purpose)	CB-03-1SA
FWB31	Noise reduction special purpose valve (direct acting 2-port solenoid valve for water)	CB-03-1SA
FWB41	Noise reduction special purpose valve (direct acting 2-port solenoid valve for water)	CB-03-1SA
FWD	Compact pilot operated solenoid valve for water	CB-03-1SA
FWG	Direct acting 3-port solenoid valve for water, single unit (Special purpose)	CB-03-1SA
FWS	Miniature fitting/bulkhead	CB-024SA
FW4000, 8000	Air filter Outdoor Series	CB-024SA
FX	Drain separator	CB-024SA
G		
G29D	Miniature pressure gauge	CB-024SA
G39D	Round pressure gauge	CB-024SA
G401-W	Low-profile pressure gauge	CB-024SA
G40D	Pressure gauge with safety marker	CB-024SA
G45D	Pressure gauge with limit marker	CB-024SA
G49D, 59D	General-use pressure gauge	CB-024SA
G49D, 59D-P6	Pressure gauge/copper and PTFE free series	CB-024SA
G49D, G59D-P70, P9*	General purpose pressure gauge for clean room	CB-024SA
G52D	Pressure gauge with switch	CB-024SA
G53D	Pressure gauge for panel mounting	CB-024SA
GA400	Differential pressure gauge	CB-024SA
GAB312	Direct acting 2-port solenoid valve, manifold/actuator (General purpose)	CB-03-1SA
GAB312-Z	Direct acting 2-port solenoid valve for dry air, manifold/actuator (General purpose)	CB-03-1SA
GAB352	Direct acting 2-port solenoid valve, manifold/actuator (General purpose)	CB-03-1SA
GAB352-Z	Direct acting 2-port solenoid valve for dry air, manifold/actuator (General purpose)	CB-03-1SA
GAB412	Direct acting 2-port solenoid valve, manifold/actuator (General purpose)	CB-03-1SA
GAB412-Z	Direct acting 2-port solenoid valve for dry air, manifold/actuator (General purpose)	CB-03-1SA
GAB422	Direct acting 2-port solenoid valve, manifold/actuator (General purpose)	CB-03-1SA
GAB452	Direct acting 2-port solenoid valve, manifold/actuator (General purpose)	CB-03-1SA
GAB452-Z	Direct acting 2-port solenoid valve for dry air, manifold/actuator (General purpose)	CB-03-1SA
GAG31*	Direct acting 3-port solenoid valve, manifold/actuator (General purpose)	CB-03-1SA
GAG31*-Z	Direct acting 3-port solenoid valve for dry air, manifold/actuator (General purpose)	CB-03-1SA
GAG33*	Direct acting 3-port solenoid valve, manifold/actuator (General purpose)	CB-03-1SA
GAG33*-Z	Direct acting 3-port solenoid valve for dry air, manifold/actuator (General purpose)	CB-03-1SA
GAG34*	Direct acting 3-port solenoid valve, actuator (General purpose)	CB-03-1SA
GAG34*-Z	Direct acting 3-port solenoid valve for dry air, actuator (General purpose)	CB-03-1SA
GAG35*	Direct acting 3-port solenoid valve, manifold/actuator (General purpose)	CB-03-1SA
GAG35*-Z	Direct acting 3-port solenoid valve for dry air, manifold/actuator (General purpose)	CB-03-1SA
GAG41*	Direct acting 3-port solenoid valve, manifold/actuator (General purpose)	CB-03-1SA
GAG41*-Z	Direct acting 3-port solenoid valve for dry air, manifold/actuator (General purpose)	CB-03-1SA
GAG43*	Direct acting 3-port solenoid valve, manifold/actuator (General purpose)	CB-03-1SA
GAG43*-Z	Direct acting 3-port solenoid valve for dry air, manifold/actuator (General purpose)	CB-03-1SA
GAG44*	Direct acting 3-port solenoid valve, actuator (General purpose)	CB-03-1SA
GAG44*-Z	Direct acting 3-port solenoid valve for dry air, actuator (General purpose)	CB-03-1SA
GAG45*	Direct acting 3-port solenoid valve, manifold/actuator (General purpose)	CB-03-1SA
GAG45*-Z	Direct acting 3-port solenoid valve for dry air, manifold/actuator (General purpose)	CB-03-1SA
GAMD3R**	Air operated valve for chemical liquids (Manifold/branch valve)	CB-03-1SA
GASB	Ball valve for automatic emergency shutdown	CB-03-1SA
GAV	Low pressure gas combination valve	CB-03-1SA
GCVE2	Modular coolant valve/air operated	CB-03-1SA
GCVSE2	Modular coolant valve/with solenoid valve	CB-03-1SA
GEXA	Pilot operated 2-port solenoid valve for compressed air/push-in fitting manifold	CB-03-1SA
GFAB	Direct acting 2-port solenoid valve for compressed air, manifold (Special purpose)	CB-03-1SA

GFAG	Direct acting 3-port solenoid valve for compressed air, manifold (Special purpose)	CB-03-1SA
GFGB	Direct acting 2-port solenoid valve for dry air, manifold (Special purpose)	CB-03-1SA
GFGG	Direct acting 3-port solenoid valve for dry air, manifold (Special purpose)	CB-03-1SA
GFLB	Direct acting 2-port solenoid valve for oil, manifold (Special purpose)	CB-03-1SA
GFM	Glass float module	CB-024SA
GFVB	Direct acting 2-port solenoid valve for medium vacuum, manifold (Special purpose)	CB-03-1SA
GFWB	Direct acting 2-port solenoid valve for water, manifold (Special purpose)	CB-03-1SA
GFWG	Direct acting 3-port solenoid valve for water, manifold (Special purpose)	CB-03-1SA
GHV	Gas combination valve	CB-03-1SA
GLC	Guideless cylinder/double acting	1198
GMF1	Ⓘ Pilot operated 5-port ISO valve/ DIN terminal box/ISO size (1)	CB-023SA
GMF1	Ⓘ Pilot operated 5-port ISO valve/I/O connector/ISO size (1)	CB-023SA
GMF2	Ⓘ Pilot operated 5-port ISO valve/ DIN terminal box/ISO size (2)	CB-023SA
GMF2	Ⓘ Pilot operated 5-port ISO valve/I/O connector/ISO size (2)	CB-023SA
GMFZ	Ⓧ Pilot operated 5-port ISO valve/ DIN terminal box/ISO size (1)/(2)	CB-023SA
GMFZ	Ⓧ Pilot operated 5-port ISO valve/ I/O connector /ISO size (1)/(2)	CB-023SA
GNAB*	Air operated 2-port valve, manifold (Compact cylinder valve)	CB-03-1SA
GNAB*V	Air operated 2-port valve for low vacuum, manifold (Compact cylinder valve)	CB-03-1SA
GNAD*	Diaphragm cylinder valve, manifold	CB-03-1SA
GNAD*V	Diaphragm cylinder valve for low vacuum, manifold	CB-03-1SA
GPS2	Contact confirmation switch/single unit	CB-024SA
GPS3	Digital gap switch/single unit	CB-024SA
GRC	Table rotary actuator/ Basic	1302
GRC-F	Table rotary actuator/ fine speed	1316
GRC-K	Table rotary actuator/ High accuracy	1302
GRC-KF	Table rotary actuator/ High accuracy/fine speed	1316
GSV	Solenoid valve for automatic watering control	CB-03-1SA
GSV2	Solenoid valve for automatic watering control	CB-03-1SA
GT9000	Refrigeration air dryer/Air cooling/ large standard inlet air (40°C) type	CB-024SA
GT9000W	Refrigeration air dryer/Water cooling/ large standard inlet air (40°C) type	CB-024SA
GT9000WV2	Refrigeration air dryer/Inverter-controlled water cooling, large standard inlet air (40°C) type	CB-024SA
GW49D	Outdoor-use pressure gauge	CB-024SA
GWC*	Fitting/cap	CB-024SA
GWCR*	Fitting/cross	CB-024SA
GWFY*	Fitting/FY	CB-024SA
GWJL*	Mini fitting/elbow	CB-024SA
GWJP*	Mini fitting/plug	CB-024SA
GWJS*	Mini fitting/straight	CB-024SA
GWJT*	Mini fitting/tee	CB-024SA
GWJY*	Mini fitting/Y tee	CB-024SA
GWL*	Fitting/elbow	CB-024SA
GWM*	Fitting/for tightening fitting	CB-024SA
GWMF*	Fitting/manifold	CB-024SA
GWP*-0	Fitting/connecting plug	CB-024SA
GWP*-B	Fitting/blanking plug	CB-024SA
GWP*-L	Fitting/L type plug	CB-024SA
GWS*	Fitting/straight	CB-024SA
GWT*	Fitting/tee	CB-024SA
GWTR*	Fitting/tetrapod	CB-024SA
GWWY*	Fitting/double Y	CB-024SA
GWY*	Fitting/Y tee	CB-024SA
GX3200D	Refrigeration air dryer/Compact for mounting on equipment/standard inlet air (35°C)	CB-024SA
GX5200D	Refrigeration air dryer/Compact for direct compressor connection/high temperature inlet air (55°C)	CB-024SA

■ Listed catalog No.

CB-029SA ... Pneumatic Cylinders Ⅰ
CB-030SA ... Pneumatic Cylinders Ⅱ
CB-023SA ... Pneumatic Valves
CB-024SA ... Pneumatic, Vacuum and Auxiliary Components
CB-03-1SA ... General Purpose Valves

■ Codes (pneumatic valves and general purpose valves)

Ⓓ... Discrete valves
Ⓘ... Individual wiring manifolds
Ⓑ... Block manifolds
Ⓡ... Reduced wiring manifolds
Ⓧ... Mix manifolds
Ⓜ... Manifolds

Model No. [index in alphabetical order]

Model No.	Model	Catalog No./page
H		
H0	Cylinder switch/1-color LED/reed	CB-029SA CB-030SA Ending Page 24
H0Y	Cylinder switch/2-color LED/reed	CB-029SA CB-030SA Ending Page 24
HAP-1C	Parallel hand	1628
HAP-2 to 4CS	Parallel hand	1630
HB	High corrosion resistant direct acting 2-port solenoid valve	CB-03-1SA
HBL	Fulcrum hand	1726
HCA	High speed cylinder/double acting/single rod	978
HCM	High energy absorption cylinder/double acting/single rod	960
HCP	Lateral parallel hand	1642
HD-0.5 to 9	Desiccant air dryer/compact heat-less dryer	CB-024SA
HDL	Wide angle hand	1744
HFP	Wide parallel hand	1714
HGP	Long stroke parallel hand	1648
HJL	Toggle hand	1732
HK1	Motorized valve for gas combustion system	CB-03-1SA
HKP	Cross roller parallel hand	1636
HLA	Thin parallel hand	1662
HLAG	Rubber covered thin parallel hand	1670
HLB	Thin parallel hand	1662
HLBG	Rubber covered thin parallel hand	1670
HLC	Thin long stroke parallel hand	1678
HLD	Ultra thin parallel hand	1686
HLF2	Low-profile long stroke hand	1652
HMD	Thin wide angle hand	1738
HMF	Compact wide parallel hand	1690
HMF-G	Coolant proof specifications compact wide parallel hand	1700
HMFB	LM guided large wide parallel hand	1708
HMTB1	Compact metal-free lever 2-port solenoid valve for medical equipment	CB-03-1SA
HMTG1	Compact metal-free lever 3-port solenoid valve for medical equipment	CB-03-1SA
HMV	Ⓓ Manual selector valve/miniature	CB-023SA
HNB1	Compact direct acting 2-port solenoid valve	CB-03-1SA
HNG1	Compact direct acting 3-port solenoid valve	CB-03-1SA
HPS	Close contact confirmation switch/single unit	CB-024SA
HPV	Manual pinch valve	CB-03-1SA
HRL-1	Hybrid robot/Pneumatic robot element/single axis unit	1452
HS	Motorized valve for gas combustion system	CB-03-1SA
HSV	Ⓓ Manual selector valve/standard	CB-023SA
HVB112	Solenoid valve for high vacuum	CB-03-1SA
HVB212	Solenoid valve for high vacuum	CB-03-1SA
HVB312	Solenoid valve for high vacuum	CB-03-1SA
HVB412	Solenoid valve for high vacuum	CB-03-1SA
HVB512	Solenoid valve for high vacuum	CB-03-1SA
HVB612	Solenoid valve for high vacuum	CB-03-1SA
HVB712	Solenoid valve for high vacuum	CB-03-1SA
HVL12	Delay vacuum solenoid valve	CB-03-1SA
HYN	Direct acting 2, 3-port valve (pinch valve for high purity fluids)	CB-03-1SA
I		
IAGD5	Integrated gas supply system	CB-03-1SA
J		
J100 to 800-W	Joiner/for rotary modular F.R.L./Standard White Series	CB-024SA
JL	Fitting (elbow fitting)	CB-024SA
JSB3	Brake unit	936
JSC3 (-N) JSC4 (-N)	Brake cylinder (medium and large bore size)/double acting/single rod	774
JSC3-H JSC4-H	Brake cylinder (medium and large bore size)/double acting/low hydraulic	818
JSC3-P12	Brake cylinder (oil-prohibited)	CB-029SA CB-030SA Ending Page 132
JSC3-T JSC4-T	Brake cylinder (medium and large bore size)/double acting/heat resistance	830
JSC3-V	Brake cylinder (medium bore size) /With valve for brake/double acting	810
JSG	Tie rod cylinder with brake/double acting/single rod	742
JSG-V	Tie rod cylinder with brake/double acting/with valve for brake release	742
JSK2	Brake cylinder (small bore size ø20 to 40/caulking)/double acting	706
JSK2-V	Brake cylinder (small bore size ø20 to 40/caulking)/With valve/double acting	706
JSM2	Brake cylinder (small bore size ø20 to 40/disassembling)/double acting	720
JSM2-V	Brake cylinder (small bore size ø20 to 40/disassembling)/With valve/double acting	720

Ending

K

K-005	Filter/for air sensor	CB-024SA
K0V/H	Cylinder switch/1-color LED/ 2-wire reed	CB-029SA CB-030SA Ending Page 20
K2, 3V/H	Cylinder switch/1-color LED, 2, 3-wire proximity	CB-029SA CB-030SA Ending Page 20
K2, 3Y V/H	Cylinder switch/2-color LED, 2, 3-wire proximity	CB-029SA CB-030SA Ending Page 20
K3P V/H	Cylinder switch/PNP output/ 3-wire proximity sensor	CB-029SA CB-030SA Ending Page 20
K5V/H	Cylinder switch/Without display/reed 2-wire	CB-029SA CB-030SA Ending Page 20
K60570	F.R.L. kit	CB-024SA
KML50	Fine level switch	CB-03-1SA
KML60	Fine level switch	CB-03-1SA
KML703	Fine level switch	CB-03-1SA
KX	Coiling tube	CB-024SA
KZV3	Pilot operated 2-port solenoid valve	CB-03-1SA

L

L1000 to 8000-P6	Lubricator/copper and PTFE free series	CB-024SA
L1000 to 8000-W	Lubricator/Standard White Series	CB-024SA
LAD*	Diaphragm cylinder valve	CB-03-1SA
LBC	Air bearing actuator	998
LCG	Linear slide cylinder/ Double acting/single rod	140
LCG-P7*	Linear slide cylinder/ Double acting/clean-room specifications	172
LCG-Q	Linear slide cylinder/ Double acting/position locking	164
LCM	Linear slide cylinder/ Double acting/single rod	10
LCM-A	Linear slide cylinder/ Double acting/side mounting	30
LCM-P	Linear slide cylinder/ Double acting stroke adjustable push type	18
LCM-P73	Linear slide cylinder/ Double acting/clean-room specifications	40
LCM-R	Linear slide cylinder/Double acting/ stroke adjustable/push-pull type	24
LCR	Linear slide cylinder/ Double acting/single rod	58
LCR-F	Linear slide cylinder/ Double acting/fine speed	112
LCR-F-P7*	Linear slide cylinder/Double acting/ fine speed/clean-room specifications	118
LCR-P7*	Linear slide cylinder/Double acting/ single rod/clean-room specifications	94
LCR-Q	Linear slide cylinder/ Double acting/position locking	84
LCW	Linear slide cylinder/ Double acting/single rod	204
LCW-Q	Linear slide cylinder/ Double acting/position locking	224
LCX	Linear slide cylinder/ Double acting/single rod	254
LCX-*L	Linear slide cylinder/Double acting/ single rod/long stroke	276
LCX-*L-P7*	Linear slide cylinder/Double acting/single rod/ clean-room specifications/long stroke	292
LCX-P7*	Linear slide cylinder/Double acting/ single rod/clean-room specifications	270
LCX-Q	Linear slide cylinder/ Double acting/position locking	264
LCX-Q-*L	Linear slide cylinder/Double acting/ position locking/long stroke	286
LFC-KL	Lifter cylinder	CB-029SA CB-030SA Ending Page 131
LGD**	Air operated valve for process gas	CB-03-1SA
LGD*0	Manual valve for process gas	CB-03-1SA
LHA	Linear guide hand	1612
LHAG	Linear guide hand with rubber cover	1620
LMB	Linear guide lock	942
LML	Linear guide lock	947
LN	Cylinder with length measuring sensor/sensor/amplifier/display	1465
LSH	Linear Slide Hand	1581
LSH-HP1	Linear Slide Hand	1512

■ Listed catalog No.

CB-029SA ... Pneumatic Cylinders Ⅰ
CB-030SA ... Pneumatic Cylinders Ⅱ
CB-023SA ... Pneumatic Valves
CB-024SA ... Pneumatic, Vacuum and Auxiliary Components
CB-03-1SA ... General Purpose Valves

■ Codes (pneumatic valves and general purpose valves)

Ⓓ... Discrete valves
Ⓘ... Individual wiring manifolds
Ⓑ... Block manifolds
Ⓡ... Reduced wiring manifolds
Ⓧ... Mix manifolds
Ⓜ... Manifolds

Model No. [index in alphabetical order]

Model No.	Model	Catalog No./page
L		
LSHL-HP1	Linear Slide Hand	1532
LSHM-HP2	Linear Slide Hand with Length Measuring Function	1546
LW4000/LW8000	Lubricator Outdoor Series	CB-024SA
M		
M0V/H	Cylinder switch/	CB-029SA
	1-color LED/2-wire reed	CB-030SA Ending Page 12
M1000 to 8000-P6	Oil mist filter/	
	Copper and PTFE free Series	CB-024SA
M1000 to 8000-W	Oil mist filter/	
	Standard White Series	CB-024SA
M2, 3V/H	Cylinder switch/	CB-029SA
	1-color LED, 2, 3-wire proximity	CB-030SA Ending Page 12
M2, 3WV	Cylinder switch/	CB-029SA
	2-color LED, 2, 3-wire proximity	CB-030SA Ending Page 12
M3GA1/2/3	Ⓘ Pilot operated 3-port valve/	
	body piping	CB-023SA
M3GA1/2/3	Ⓜ Pilot operated 3-port valve	
	(master valve)/body piping	CB-023SA
M3GA1/2/3-T*(D)	Ⓡ Pilot operated 3-port valve	
	Body piping	CB-023SA
M3GB1/2	Ⓘ Pilot operated two 3-port	
	valves integrated/base piping	CB-023SA
M3GB1/2-T* (D)	Ⓡ Pilot operated two 3-port	
	valves integrated/base piping	CB-023SA
M3GD1/2/3	Ⓘ Pilot operated 3-port valve/	
	body piping	CB-023SA
M3GD1/2/3-T*(D)	Ⓡ Pilot operated 3-port valve	
	Body piping	CB-023SA
M3GD1/2*0EJ	Ⓘ Intrinsically safe explosion-proof	
	pilot operated 3-port valve/body piping	CB-023SA
M3GE1/2	Ⓘ Pilot operated two 3-port	
	valves integrated/base piping	CB-023SA
M3GE1/2-T* (D)	Ⓡ Pilot operated two 3-port	
	valves integrated/base piping	CB-023SA
M3GE1/2*0EJ	Ⓘ Intrinsically safe explosion-proof	
	pilot operated 3-port valve/base piping	CB-023SA
M3KA1	Ⓘ Pilot operated 3-port valve	
	Body piping	CB-023SA
M3KA1	Ⓜ Pilot operated 3-port valve	
	(master valve)/body piping	CB-023SA
M3MA0	Ⓘ Direct acting 3-port valve/	
	Body piping	CB-023SA
M3MB0	Ⓘ Direct acting 3-port valve/	
	Sub-plate piping	CB-023SA
M3P V/H	Cylinder switch/1-color LED/	CB-029SA
	PNP output/3-wire proximity sensor	CB-030SA Ending Page 12
M3PA1/2	Ⓘ Direct acting 3-port valve/	
	Body piping	CB-023SA
M3PB1/2	Ⓘ Direct acting 3-port valve/	
	Sub-plate piping	CB-023SA
M3QB1	Ⓘ Direct acting 3-port valve/	
	Sub-plate piping	CB-023SA
M3QE1	Ⓘ Direct acting 3-port valve/	
	Sub-plate piping	CB-023SA
M3QZ1	Ⓘ Direct acting 3-port valve/	
	Sub-plate piping	CB-023SA
M3QRA	Ⓘ Direct acting 3-port valve/	
	Body piping	CB-023SA
M3QRB	Ⓘ Direct acting 3-port valve/	
	Sub-plate piping	CB-023SA
M4F0/1/2/3	Ⓘ Pilot operated 5-port valve/	
	Body piping	CB-023SA
M4F0/1/2/3	Ⓜ Pilot operated 5-port valve	
	(master valve)/body piping	CB-023SA
M4F30EX**	Ⓘ Explosion-proof pilot operated	
	5-port valve/body piping	CB-023SA
M4F3*0E	Ⓘ Explosion-proof pilot operated	
	5-port valve/body piping	CB-023SA
M4F4/5/6/7	Ⓘ Pilot operated 5-port valve/	
	sub-plate piping	CB-023SA
M4F4/5/6/7	Ⓜ Pilot operated 5-port valve	
	(master valve)/sub-plate piping	CB-023SA
M4F4/5/6/7*0EX	Ⓘ Explosion-proof pilot operated	
	5-port valve/sub-plate piping	CB-023SA
M4F4/5/6/7*0E	Ⓘ Explosion-proof pilot operated	
	5-port valve/sub-plate piping	CB-023SA
M4GA1/2/3	Ⓘ Pilot operated 5-port valve/	
	body piping	CB-023SA
M4GA1/2/3	Ⓜ Pilot operated 5-port valve	
	(master valve)/body piping	CB-023SA
M4GA1/2/3-T*(D)	Ⓡ Pilot operated 5-port valve/	
	body piping	CB-023SA
M4GA4	Ⓘ Pilot operated 5-port valve/	
	body piping	CB-023SA
M4GA4-T*	Ⓡ Pilot operated 5-port valve/	
	body piping	CB-023SA

M4GA4-T6 (D)	Ⓡ Pilot operated 5-port valve (serial transmission)/body piping	CB-023SA	
M4GB1/2/3	Ⓘ Pilot operated 5-port valve/ base piping	CB-023SA	
M4GB1/2/3	Ⓜ Pilot operated 5-port valve (master valve)/base piping	CB-023SA	
M4GB1/2/3-T* (D)	Ⓡ Pilot operated 5-port valve base piping	CB-023SA	
M4GB4	Ⓘ Pilot operated 5-port valve/ base piping	CB-023SA	
M4GB4-T*	Ⓡ Pilot operated 5-port valve base piping	CB-023SA	
M4GB4-T6 (D)	Ⓡ Pilot operated 5-port valve (serial transmission)/base piping	CB-023SA	
M4GD1/2/3	Ⓜ Pilot operated 5-port valve (master valve)/body piping	CB-023SA	
M4GD1/2/3-T*(D)	Ⓡ Pilot operated 5-port valve/ body piping	CB-023SA	
M4GD1/2/3/4*0EJ	Ⓘ Intrinsically safe explosion-proof pilot operated 5-port valve/body piping	CB-023SA	
M4GE1/2/3	Ⓘ Pilot operated 5-port valve/ base piping	CB-023SA	
M4GE1/2/3-T* (D)	Ⓡ Pilot operated 5-port valve base piping	CB-023SA	
M4GE1/2/3/4*0EJ	Ⓘ Intrinsically safe explosion-proof pilot operated 5-port valve/base piping	CB-023SA	
M4KA1/2/3/4	Ⓘ Pilot operated 5-port valve/ body piping	CB-023SA	
M4KA1/2/3/4	Ⓜ Pilot operated 5-port valve (master valve)/body piping	CB-023SA	
M4KB1/2/3/4	Ⓘ Pilot operated 4, 5-port valve/sub-plate piping	CB-023SA	
M4KB1/2/3/4	Ⓜ Pilot operated 4, 5-port valve (master valve)/sub-plate piping	CB-023SA	
M4SA0	Ⓘ Pilot operated 5-port valve/ body piping	CB-023SA	
M4SB0	Ⓘ Pilot operated 5-port valve/ sub-plate piping	CB-023SA	
M4SB0	Ⓡ Pilot operated 5-port valve/ sub-plate piping	CB-023SA	
M512*	Ⓓ Pilot operated 2-port valve/ direct mounting	CB-023SA	
M513*	Ⓓ Pilot operated 3-port valve/ direct mounting	CB-023SA	
M5V/H	Cylinder switch/ Without display/reed 2-wire	CB-029SA CB-030SA Ending Page 12	
MAB1	Metal-free 2-port solenoid valve	CB-03-1SA	
MAG1	Metal-free 3-port solenoid valve	CB-03-1SA	
MAVL	Large mechanical valve/detector	CB-024SA	
MCP	Mechanical power cylinder		1180
MD	Multi-monitors	CB-024SA	
MDC2	Compact direct mounting cylinder/double acting/single rod	CB-029SA	1348
MDC2-F	Compact direct mounting cylinder/double acting/fine speed	CB-029SA	1364
MDC2-X	Compact direct mounting cylinder/single acting/push	CB-029SA	1354
MDC2-Y	Compact direct mounting cylinder/single acting/pull	CB-029SA	1354
MDV	Compact direct mounting cylinder	CB-029SA CB-030SA Ending Page 130	
MEB2	Metal-free 2-port solenoid valve	CB-03-1SA	
MEG2	Metal-free 3-port solenoid valve	CB-03-1SA	
MEVT	Thin electro pneumatic regulator/ Reduced wiring manifold	CB-024SA	
MFC	Robot cylinder/double acting/single rod		1218
MFC-B	Robot cylinder/double acting/with brake		1226
MFC-BK	Robot cylinder/ Double acting/with brake/high load		1226
MFC-BS	Robot cylinder/ Double acting/with brake sensor		1236
MFC-BSK	Robot cylinder/ Double acting/with brake sensor/high load		1236
MFC-K	Robot cylinder/double acting/high load		1218
MGD10/20R	Manual valve for process gas	CB-03-1SA	
MGPS2	Contact confirmation switch/manifold	CB-024SA	
MGPS3	Digital gap switch/manifold	CB-024SA	
MHB4	Miniature motorized 2-port ball valve (motor valve)	CB-03-1SA	
MHG4	Miniature motorized 3-port ball valve (motor valve)	CB-03-1SA	
MHPS	Close contact confirmation switch manifold	CB-024SA	

■ Listed catalog No.

CB-029SA ... Pneumatic Cylinders Ⅰ
CB-030SA ... Pneumatic Cylinders Ⅱ
CB-023SA ... Pneumatic Valves
CB-024SA ... Pneumatic, Vacuum and Auxiliary Components
CB-03-1SA ... General Purpose Valves

■ Codes (pneumatic valves and general purpose valves)

Ⓓ... Discrete valves
Ⓘ... Individual wiring manifolds
Ⓑ... Block manifolds
Ⓡ... Reduced wiring manifolds
Ⓧ... Mix manifolds
Ⓜ... Manifolds

Model No. [index in alphabetical order]

Model No.	Model	Catalog No./page
M		
MJB3	Metal-free direct acting 2-port solenoid valve	CB-03-1SA
MJL*	Tightening fitting/elbow	CB-024SA
MJN*	Tightening fitting/sleeve	CB-024SA
MJS*	Tightening fitting/straight	CB-024SA
MJT*	Tightening fitting/tee	CB-024SA
MJU*	Tightening fitting/insert ring	CB-024SA
MKB3	Metal-free 2-port solenoid valve	CB-03-1SA
MM	Medium mechanical valve/detector	CB-024SA
MM3000 to 8000	Oil mist filter/medium pressure series	CB-024SA
MMD*03RN	Manual valve for chemical liquids	CB-03-1SA
MN3E0	Ⓡ Pilot operated 3, 4-port valve	CB-023SA
MN3E00	Ⓡ Pilot operated 3, 4-port valve	CB-023SA
MN3EX0	Ⓡ/Ⓧ Pilot operated 3-port valve	CB-023SA
MN3GA1/2	Ⓘ/Ⓑ Pilot operated 3-port valve/body piping	CB-023SA
MN3GA1/2-T*	Ⓘ/Ⓑ Pilot operated 3-port valve/body piping	CB-023SA
MN3GAX12	Ⓡ/Ⓧ Pilot operated 3-port valve/body piping	CB-023SA
MN3GB1/2	Ⓘ/Ⓑ Pilot operated two 3-port valves integrated/base piping	CB-023SA
MN3GB1/2-T*	Ⓡ/Ⓑ Pilot operated two 3-port valves integrated/base piping	CB-023SA
MN3GD1/2	Ⓘ/Ⓑ Pilot operated 3-port valve/body piping	CB-023SA
MN3GD1/2-T*	Ⓘ/Ⓑ Pilot operated 3-port valve/body piping	CB-023SA
MN3GDX12	Ⓡ/Ⓧ Pilot operated 3-port valve/body piping	CB-023SA
MN3GE1/2	Ⓘ/Ⓑ Pilot operated two 3-port valves integrated/base piping	CB-023SA
MN3GE1/2-T*	Ⓡ/Ⓑ Pilot operated two 3-port valves integrated/base piping	CB-023SA
MN3S0	Ⓡ Pilot operated 3-port valve/ (reduced wiring valve)	CB-023SA
MN3S0	Ⓡ Pilot operated 3-port valve/(reduced wiring valve)/two 3-port valves integrated	CB-023SA
MN4E0	Ⓡ Pilot operated 3, 4-port valve	CB-023SA
MN4E00	Ⓡ Pilot operated 3, 4-port valve	CB-023SA
MN4EX0	Ⓡ/Ⓧ Pilot operated 4-port valve	CB-023SA
MN4GA1/2	Ⓘ/Ⓑ Pilot operated 5-port valve/body piping	CB-023SA
MN4GA1/2-T*	Ⓡ/Ⓑ Pilot operated 5-port valve/body piping	CB-023SA
MN4GAX12	Ⓡ/Ⓧ Pilot operated 5-port valve/body piping	CB-023SA
MN4GB1/2	Ⓘ/Ⓑ Pilot operated 5-port valve/base piping	CB-023SA
MN4GB1/2-T*	Ⓡ/Ⓑ Pilot operated 5-port valve/base piping	CB-023SA
MN4GBX12	Ⓡ/Ⓧ Pilot operated 5-port valve/base piping	CB-023SA
MN4GD1/2	Ⓘ/Ⓑ Pilot operated 5-port valve/body piping	CB-023SA
MN4GD1/2-T*	Ⓡ/Ⓑ Pilot operated 5-port valve/body piping	CB-023SA
MN4GDX12	Ⓡ/Ⓧ Pilot operated 5-port valve/body piping	CB-023SA
MN4GE1/2	Ⓘ/Ⓑ Pilot operated 5-port valve/base piping	CB-023SA
MN4GE1/2-T*	Ⓡ/Ⓑ Pilot operated 5-port valve/base piping	CB-023SA
MN4GEX12	Ⓡ/Ⓧ Pilot operated 5-port valve/base piping	CB-023SA
MN4KB1/2	Ⓑ Pilot operated 5-port valve/ sub-plate piping	CB-023SA
MN4S0	Ⓡ Pilot operated 4-port valve/ (reduced wiring valve)	CB-023SA
MNRB500	Block manifold regulator	CB-024SA
MNRJB500	Block manifold Compact direct acting precision regulator	CB-024SA
MR10R	Compact metal-free 2, 3-port solenoid valve	CB-03-1SA
MR16	Compact metal-free 2, 3-port solenoid valve	CB-03-1SA
MRG2	Magnet rodless cylinder/ double acting	CB-029SA 1766
MRL2	Magnet rodless cylinder/basic	CB-029SA 1740
MRL2-F	Magnet rodless cylinder/fine speed	CB-029SA 1740
MRL2-G	Magnet rodless cylinder/ simplified guide 1-piston	CB-029SA 1740
MRL2-GF	Magnet rodless cylinder/simplified guide 1-piston/fine speed	CB-029SA 1740

MRL2-W	Magnet rodless cylinder/ simplified guide 2-piston	CB-029SA 1740
MRL2-WF	Magnet rodless cylinder/simplified guide 2-piston/fine speed	CB-029SA 1740
MS	Compact mechanical valve/detector	CB-024SA
MSB1	Motor driven 2-port ball valve for steam (motor valve)	CB-03-1SA
MSB1D	Motor driven 2-port ball valve with relay for steam (motor valve)	CB-03-1SA
MSB1DF	Motor driven 2-port ball valve with relay for steam (motor valve)/full bore	CB-03-1SA
MSB1F	Motor driven 2-port ball valve for steam (motor valve)/full bore	CB-03-1SA
MSD	Small compact cylinder/ Double acting/single rod	CB-029SA 1422
MSD-F	Small compact cylinder/ Double acting/single rod/fine speed	CB-029SA 1450
MSDG-L	Small compact cylinder/ Double acting/guided/with switch	CB-029SA 1452
MSDG-LF	Small compact cylinder/ Double acting/guided/with switch/fine speed	CB-029SA 1462
MSD-K	Small compact cylinder/ Double acting/high load	CB-029SA 1440
MSD-KF	Small compact cylinder/ Double acting/high load/fine speed	CB-029SA 1450
MSD-X	Small compact cylinder/ Single acting/push	CB-029SA 1430
MSD-Y	Small compact cylinder/ Single acting/pull	CB-029SA 1430
MT3S0	Ⓡ Pilot operated 3-port valve/ (reduced wiring valve)	CB-023SA
MT3S0	Ⓡ Pilot operated 3-port valve (Reduced wiring valve) Two 3-port valves integrated	CB-023SA
MT4S0	Ⓡ Pilot operated 4-port valve/ (reduced wiring valve)	CB-023SA
MTLPS	Cutting tool breakage detection switch/ Manifold	CB-024SA
MV3QRA	3QR negative pressure switching unit Body piping	CB-023SA
MV3QRB	3QR negative pressure switching unit Sub-plate piping	CB-023SA
MVB*0	Manual valve for high vacuum	CB-03-1SA
MVB*17	Manual valve for high vacuum	CB-03-1SA
MVC	Compact cylinder with suction pad/ Double acting/single rod	CB-029SA 1374
MVP*0	Manual valve for high vacuum	CB-03-1SA
MW3GA2	Ⓡ Pilot operated 3-port valve/ body piping	CB-023SA
MW3GA2-R1	Ⓘ Pilot operated 3-port valve/ body piping	CB-023SA
MW4GA2	Ⓡ Pilot operated 5-port valve/ body piping	CB-023SA
MW4GA2-R1	Ⓘ Pilot operated 5-port valve/ body piping	CB-023SA
MW4GB2	Ⓡ Pilot operated 5-port valve/ base side piping	CB-023SA
MW4GB2-R1	Ⓘ Pilot operated 5-port valve/ base side piping	CB-023SA
MW4GB4-R1	Ⓘ Pilot operated 5-port valve/ base side piping	CB-023SA
MW4GB4-T1/6	Ⓡ Pilot operated 5-port valve/ base side piping	CB-023SA
MW4GZ2	Ⓡ Pilot operated 5-port valve/ base bottom piping	CB-023SA
MW4GZ2-R1	Ⓘ Pilot operated 5-port valve/ base bottom piping	CB-023SA
MW4GZ4-R1	Ⓘ Pilot operated 5-port valve/ base bottom piping	CB-023SA
MW4GZ4-T1/6	Ⓡ Pilot operated 5-port valve/ base bottom piping	CB-023SA
MW4000, 8000	Oil mist filter Outdoor Series	CB-024SA
MWD	Weir diaphragm valve	CB-03-1SA
MX1000 to 8000-W	High performance oil mist filter Standard White Series	CB-024SA
MXB1	Motor driven 2-port ball valve (motor valve)	CB-03-1SA
MXB1D	Motor driven 2-port ball valve with relay (motor valve)	CB-03-1SA
MXB1DF	Motor driven 2-port ball valve with relay (motor valve)/full bore	CB-03-1SA

■ Listed catalog No.

CB-029SA ... Pneumatic Cylinders Ⅰ
CB-030SA ... Pneumatic Cylinders Ⅱ
CB-023SA ... Pneumatic Valves
CB-024SA ... Pneumatic, Vacuum and Auxiliary Components
CB-03-1SA ... General Purpose Valves

■ Codes (pneumatic valves and general purpose valves)

Ⓓ... Discrete valves
Ⓘ... Individual wiring manifolds
Ⓑ... Block manifolds
Ⓡ... Reduced wiring manifolds
Ⓧ... Mix manifolds
Ⓜ... Manifolds

Model No. [index in alphabetical order]

Model No.	Model	Catalog No./page
M		
MXB1D-N	Motor driven oil-prohibited 2-port ball valve (motor valve)	CB-03-1SA
MXB1F	Motor driven 2-port ball valve (motor valve)/full bore	CB-03-1SA
MXB1-N	Motor driven oil-prohibited 2-port ball valve (motor valve)	CB-03-1SA
MXBC2	Motor driven proportional control 2-port ball valve (motor valve)	CB-03-1SA
MXG1	Motor driven 3-port ball valve (motor valve)	CB-03-1SA
MXG1D	Motor driven 3-port ball valve with relay (motor valve)	CB-03-1SA
MXG1D-N	Motor driven oil-prohibited 3-port ball valve (motor valve)	CB-03-1SA
MXG1-N	Motor driven oil-prohibited 3-port ball valve (motor valve)	CB-03-1SA
MXGC2	Motor driven proportional control 3-port ball valve (motor valve)	CB-03-1SA
MYB1	Metal-free 2-port solenoid valve	CB-03-1SA
MYB2	Metal-free 2-port solenoid valve	CB-03-1SA
MYB3	Metal-free 2-port solenoid valve	CB-03-1SA
MYG1	Metal-free 3-port solenoid valve	CB-03-1SA
MYG2	Metal-free 3-port solenoid valve	CB-03-1SA
MYG3	Metal-free 3-port solenoid valve	CB-03-1SA
N		
N*P51*	Ⓑ Pilot operated 2, 3, 5-port valve/block manifold	CB-023SA
NAB*	Air operated 2-port valve/single unit (compact cylinder valve)	CB-03-1SA
NAB*V	Air operated 2-port valve with solenoid valve for low vacuum/single unit (compact cylinder valve)	CB-03-1SA
NAB-4SX1450	Air operated 2-port valve, cylinder valve for high pressure air	CB-03-1SA
NAB-4SX1451	Air operated 2-port valve, cylinder valve for high pressure air	CB-03-1SA
NAB-6X2191/2192	Medium pressure cylinder valve	CB-03-1SA
NAB-X2267/2268	Color changing valve	CB-03-1SA
NAD*	Diaphragm cylinder valve	CB-03-1SA
NAD*V	Diaphragm cylinder valve for low vacuum	CB-03-1SA
NAP11	Air operated 3-port valve	CB-03-1SA
NCK	Shock absorber/fixed	1902
NHS-H	New handling system/Z-axis module HRL	1430
NHS-S	New handling system/Z-axis module STL-B	1440
NP13/14	Internal pilot 3-port valve with solenoid valve	CB-03-1SA
NPV2	Direct pressure automatic pinch valve	CB-03-1SA
NS	Nitrogen gas extraction unit/ Unit	CB-024SA
NSU	Nitrogen gas extraction unit/ System	CB-024SA
NSR	New handling system/X-axis module	1422
NU	New urethane tube	CB-024SA
NVP11	Air operated 3-port valve/with solenoid valve	CB-03-1SA
O		
OGD10/20R	Manual valve for process gas	CB-03-1SA
OMC2	Sequential fluid control components for pulse-jet valve (large port size dust collector valve)	CB-03-1SA
P		
P1100-W	Reed switch Compact mechanical pressure switch	CB-024SA
P4000-W	Mechanical pressure switch/ Standard White Series	CB-024SA
P4100-W	Reed switch Compact mechanical pressure switch	CB-024SA
P512*	Ⓓ Pilot operated 2-port valve/pilot	CB-023SA
P513*	Ⓓ Pilot operated 3-port valve/pilot	CB-023SA
P5142	Ⓓ Pilot operated 5-port valve/pilot	CB-023SA
P8100-W	Reed switch Compact mechanical pressure switch	CB-024SA
PCC	Pin clamp cylinder Double acting/single rod	1118
PCC-Q	Pin clamp cylinder Double acting/position locking	1118
PD2	Pilot operated 2-port air operated valve for dust collector	CB-03-1SA
PD3-20 to 40A	Pilot operated 2-port air operated valve for dust collector	CB-03-1SA
PD3-65 to 80A/M	Pilot operated 2-port air operated valve for large bore size dust collector	CB-03-1SA
PDV2	Pilot operated 2-port valve with solenoid valve for dust collector	CB-03-1SA

PDV3-20 to 40A	Pilot operated 2-port valve with solenoid valve for dust collector	CB-03-1SA
PDV3-65 to 80A/M	Pilot operated 2-port valve with solenoid valve for large bore size dust collector	CB-03-1SA
PDVE4	Explosion-proof 2-port solenoid valve (explosion-proof pulse-jet valve) for dust collector	CB-03-1SA
PE	Pressure switch/logic valve	CB-024SA
PFD	Pneumatic flow rate sensor/separated display	CB-024SA
PFK	Pneumatic flow rate sensor/tester kit	CB-024SA
PG	Push-in fitting for fiber tube (Standard)	CB-024SA
PGM	Regulator for process gas	CB-03-1SA
PG-P2-B	Blanking plug	CB-024SA
PJVB	Control box manifold solenoid valve (2-port solenoid valve for pulse jet control)	CB-03-1SA
PKA	Pilot kick 2-port solenoid valve for air	CB-03-1SA
PKS	Pilot kick 2-port solenoid valve for steam	CB-03-1SA
PKW	Pilot kick 2-port solenoid valve for water	CB-03-1SA
PL	PL switch	CB-024SA
PLE-B12	Side block/integrated	CB-024SA
PLJ-C12	YES element/relay	CB-024SA
PLK-A11	OR element/line type	CB-024SA
PLK-B12	OR element/integrated	CB-024SA
PLK-C12	OR element/relay	CB-024SA
PLL-A11	AND element/line type	CB-024SA
PLL-B12	AND element/integrated	CB-024SA
PLL-C12	AND element/relay	CB-024SA
PLM	Memory element/relay	CB-024SA
PLN-B12	NOT element/integrated	CB-024SA
PLN-C12	NOT element/relay	CB-024SA
PLN-D12	Threshold element/relay	CB-024SA
PMP	Fine regulator	CB-03-1SA
PNA	Oxygen concentration monitor	CB-024SA
PPD3	Electronic pressure switch/ Sensor/amplifier integrated with display	CB-024SA
PPD3-S	Electronic pressure switch/stainless steel diaphragm sensor/sensor/amplifier integrated with display	CB-024SA
PPE	Compact electronic pressure switch/ Sensor/amplifier integrated without display	CB-024SA
PPE-*A	Compact electronic pressure switch/ Sensor-amplifier integrated/without display/analog output	CB-024SA
PPG-D	Electronic pressure sensor with digital display	CB-024SA
PPR	Electronic pressure sensor with digital display	CB-024SA
PPX	Digital pressure sensor	CB-024SA
PRD	Amplifier/element and sensor	CB-024SA
PRE-A12	Pressure switch/relay	CB-024SA
PRF-A2	Booster/element and sensor	CB-024SA
PRS-A12	Solenoid valve/relay	CB-024SA
PRT	Timer/relay	CB-024SA
PSD	PLC branch block	CB-024SA
PSE	PLC I/O block	CB-024SA
PSL	PLC AND element	CB-024SA
PSM	PLC element	CB-024SA
PSV	PLC sub-base V type	CB-024SA
PSW	Electronic pressure switch/ Sensor/amplifier integrated without display	CB-024SA
PTN2	Fitting for fiber tube	CB-024SA
PV5-6R	Ⓓ Pilot operated 5-port valve ISO valve / I/O connector/ISO size (1)	CB-023SA
PV5-8R	Ⓓ Pilot operated 5-port valve ISO valve / I/O connector/ISO size (2)	CB-023SA
PV5G-6	Ⓓ Pilot operated 5-port valve ISO valve /DIN terminal box/ISO size (1)	CB-023SA
PV5G-8	Ⓓ Pilot operated 5-port valve ISO valve /DIN terminal box/ISO size (2)	CB-023SA
PV5S-0	ISO compliant master valve	CB-023SA
PVP	Precise suction plate	CB-024SA
PVS	Pilot operated 2-port solenoid valve	CB-03-1SA
PWS	Threshold sensor	CB-024SA
PXB-B3	Pushbutton switch and switch body/separated	CB-024SA
PXC-K	Limit switch	CB-024SA
PXC-M	Miniature limit switch	CB-024SA

■ Listed catalog No.

CB-029SA ... Pneumatic Cylinders Ⅰ
CB-030SA ... Pneumatic Cylinders Ⅱ
CB-023SA ... Pneumatic Valves
CB-024SA ... Pneumatic, Vacuum and Auxiliary Components
CB-03-1SA ... General Purpose Valves

■ Codes (pneumatic valves and general purpose valves)

Ⓓ... Discrete valves
Ⓘ... Individual wiring manifolds
Ⓑ... Block manifolds
Ⓡ... Reduced wiring manifolds
Ⓧ... Mix manifolds
Ⓜ... Manifolds

Model No. [index in alphabetical order]

Model No.	Model	Catalog No./page
P		
PXC-M	Compact limit switch	CB-024SA
PXD	Proximity sensor/element and sensor	CB-024SA
PXF	Limit sensor/element and sensor	CB-024SA
PXV	Air lamp	CB-024SA
PYM	Fine regulator	CB-03-1SA
PZM	Mounting bracket/line type	CB-024SA
PZU	Sub-base and input block/ relay sub-base	CB-024SA
Q		
QEL	Quick exhaust valve	CB-024SA
QEV2	Quick exhaust valve	CB-024SA
R		
R0, 3, 4, 6	Cylinder switch/ 1-color LED/2-wire reed	CB-029SA CB-030SA Ending Page 14
R1, 2	Cylinder switch/ 1-color LED, proximity 2-wire	CB-029SA CB-030SA Ending Page 14
R1000 to 8000-P6	Regulator/copper and PTFE free series	CB-024SA
R1000 to 8000-W	Regulator/Standard White Series	CB-024SA
R1100 to 8100-P6	Reverse regulator/copper and PTFE free series	CB-024SA
R1100 to R8100-W	Reverse regulator/Standard White Series	CB-024SA
R2, 3Y	Cylinder switch/ 2-color LED, 2, 3-wire proximity	CB-029SA CB-030SA Ending Page 14
R3000 to 8000-G4	Regulator/flame-resistant series	CB-024SA
R3100 to 8100-G4	Reverse regulator/flame-resistant series	CB-024SA
R5	Cylinder switch/ Without display/reed 2-wire	CB-029SA CB-030SA Ending Page 14
RA800	Compact regulator/compact piston	CB-024SA
RB500	Compact regulator	CB-024SA
RC2000	Clean regulator	CB-024SA
RCC2	Rotary clamp cylinder Double acting/single rod	1096
RCC2-G4	Rotary clamp cylinder Anti-spatter adherence	1108
RCS2	Rotary clamp cylinder (single guide) double acting/single rod	1068
RCS2-G4	Rotary clamp cylinder (single guide) double acting/anti-spatter adherence	1084
RCS2-T2	Rotary clamp cylinder (single guide) packing material fluoro rubber	1078
RG	Fiber tube push-in fitting (flame resistance)	CB-024SA
RJB500	Compact direct acting precision regulator	CB-024SA
RJF	Rotary fitting	CB-024SA
RM3000, 4000	Regulator/medium pressure series	CB-024SA
RN3000 to 8000	Oil-prohibited regulator	CB-024SA
RP1000	Precision regulator	CB-024SA
RPE1000	Precision regulator	CB-024SA
RP2000	Precision regulator	CB-024SA
RRC	Rotary actuator/ Rack and pinion	1286
RS-6	Rain sensor for automatic watering control	CB-03-1SA
RSC-G	Watering controller	CB-03-1SA
RSC-1WP	Battery operated watering controller	CB-03-1SA
RSC-1WP-C	Automatic watering controller	CB-03-1SA
RSC-1WP-H	Automatic watering controller	CB-03-1SA
RSC-2WP	Battery operated watering controller	CB-03-1SA
RSC-S5	Solar controller	CB-03-1SA
RSV-K	Solenoid valve for automatic watering control	CB-03-1SA
RSV-W	Solenoid valve for automatic watering control	CB-03-1SA
RTD-3A	Air timer/logic valve	CB-024SA
RW4000, 8000	Regulator Outdoor Series	CB-024SA
RV3DA	Compact rotary actuator/ Angle variable/double vane mechanism	1354
RV3DV/W	Compact rotary actuator/ With valve/double vane mechanism	1350
RV3DV/W	Large rotary actuator/ With valve/double vane mechanism	1372
RV3S/D	Compact rotary actuator/vane	1338
RV3S/D	Large rotary actuator/vane	1364
RV3S/DH	Large rotary actuator/ Low hydraulic/vane mechanism	1378
RV3SA	Compact rotary actuator/ Angle variable/single vane mechanism	1354
RV3SV/W	Compact rotary actuator/ With valve/single vane mechanism	1350
RV3SV/W	Large rotary actuator/ With valve/single vane mechanism	1372
RVC	Shock absorber	1382

S

SAB*A	Air operated 2-port valve for air/gas (cylinder valve)	CB-03-1SA	
SAB*S	Air operated 2-port valve for steam/water/air (cylinder valve)	CB-03-1SA	
SAB*V	Air operated 2-port valve for low vacuum (cylinder valve)	CB-03-1SA	
SAB*W	Air operated 2-port valve for water/liquid (cylinder valve)	CB-03-1SA	
SAL	Compact air lamp/logic valve	CB-024SA	
SC1	Speed controller/medium bore size	CB-024SA	
SC1-W	Speed controller/Outdoor Series	CB-024SA	
SC-20A to 50A	Speed controller/large bore size	CB-024SA	
SC3P	Speed controller/ Stainless steel anti-corrosion	CB-024SA	
SC3R	Speed controller/ Direct piping/elbow	CB-024SA	
SC3U	Speed controller/ Universal/push-in fitting	CB-024SA	
SC3W	Speed controller/ Elbow/push-in fitting	CB-024SA	
SCA2	Medium bore size cylinder (medium bore size ø40 to 100)/double acting/single rod	CB-029SA	450
SCA2-B	Medium bore size cylinder (medium bore size ø40 to 100)/double acting/back to back	CB-029SA	548
SCA2-D	Medium bore size cylinder (medium bore size ø40 to 100)/double acting/double rod	CB-029SA	540
SCA2-G	Medium bore size cylinder (medium bore size ø40 to 100)/double acting/rubber scraper	CB-029SA	576
SCA2-G1	Medium bore size cylinder (medium bore size ø40 to 100)/double acting/with scraper	CB-029SA	590
SCA2-G2/3	Medium bore size cylinder (medium bore size ø40 to 100)/double acting/coolant proof	CB-029SA	584
SCA2-G4	Medium bore size cylinder (medium bore size ø40 to 100)/double acting/anti-spatter adherence	CB-029SA	590
SCA2-H	Medium bore size cylinder (medium bore size ø40 to 100)/double acting/low hydraulic	CB-029SA	568
SCA2-K	Medium bore size cylinder (medium bore size ø40 to 100)/double acting/steel tube	CB-029SA	564
SCA2-O	Medium bore size cylinder (medium bore size ø40 to 100)/double acting/low speed	CB-029SA	526
SCA2-P	Medium bore size cylinder (medium bore size ø40 to 100)/double acting/stroke adjustable/push	CB-029SA	472
SCA2-P12	Medium bore size cylinder (oil-prohibited)	CB-029SA CB-030SA	Ending Page 132
SCA2-Q2	Medium bore size cylinder (medium bore size ø40 to 100)/double acting/position locking	CB-029SA	494
SCA2-R	Medium bore size cylinder (medium bore size ø40 to 100)/double acting/adjustable stroke/pull	CB-029SA	480
SCA2-T	Medium bore size cylinder (medium bore size ø40 to 100)/double acting/heat resistance	CB-029SA	488
SCA2-U	Medium bore size cylinder (medium bore size ø40 to 100)/double acting/low friction	CB-029SA	534
SCA2-V	Medium bore size cylinder (medium bore size ø40 to 100)/with valve/double acting	CB-029SA	596
SCA2-W	Medium bore size cylinder (medium bore size ø40 to 100)/double acting/two-stage	CB-029SA	556
SCD	Speed controller/ Miniature in/out	CB-024SA	
SCD2	Speed controller/ In/out line type/with push-in fitting	CB-024SA	
SCG	Tie rod cylinder/ Double acting/single rod	CB-029SA	358
SCG-D	Tie rod cylinder/ Double acting/double rod	CB-029SA	406
SCG-G	Tie rod cylinder/ Double acting/rubber scraper	CB-029SA	418
SCG-G2/3	Tie rod cylinder/ Double acting/coolant proof	CB-029SA	424
SCG-G4	Tie rod cylinder/ Double acting/anti-spatter adherence	CB-029SA	430
SCG-M	Tie rod cylinder/ Double acting/rotation-stop	CB-029SA	412
SCG-O	Tie rod cylinder/ Double acting/low speed	CB-029SA	396
SCG-Q	Tie rod cylinder/ Double acting/position locking	CB-029SA	374
SCG-U	Tie rod cylinder/ Double acting/low friction	CB-029SA	402
SCK	Shock absorber/adjustable		1914

■ Listed catalog No.

CB-029SA ... Pneumatic Cylinders Ⅰ
CB-030SA ... Pneumatic Cylinders Ⅱ
CB-023SA ... Pneumatic Valves
CB-024SA ... Pneumatic, Vacuum and Auxiliary Components
CB-03-1SA ... General Purpose Valves

■ Codes (pneumatic valves and general purpose valves)

Ⓓ... Discrete valves
Ⓘ... Individual wiring manifolds
Ⓑ... Block manifolds
Ⓡ... Reduced wiring manifolds
Ⓧ... Mix manifolds
Ⓜ... Manifolds

Model No. [index in alphabetical order]

Model No.	Model	Catalog No./page	
S			
SCL2	Speed controller/ Line type/with push-in fitting	CB-024SA	
SCL2-N	Needle valve/ Line type/with push-in fitting	CB-024SA	
SCM	Round shaped cylinder/ double acting/single rod	CB-029SA	232
SC-M3/M5 (-F)	Speed controller/miniature	CB-024SA	
SCM-B	Round shaped cylinder/ double acting/back to back	CB-029SA	316
SCM-D	Round shaped cylinder/ double acting/double rod	CB-029SA	308
SCM-F	Round shaped cylinder/ double acting/fine speed	CB-029SA	292
SCM-LD	Round shaped cylinder/double acting/direct mounting foot	CB-029SA	340
SCM-M	Round shaped cylinder/ double acting/rotation-stop	CB-029SA	334
SCM-O	Round shaped cylinder/ double acting/low speed	CB-029SA	298
SCM-P	Round shaped cylinder/double acting/adjustable stroke/push	CB-029SA	266
SCM-Q	Round shaped cylinder/ double acting/position locking	CB-029SA	282
SCM-R	Round shaped cylinder/double acting/adjustable stroke/pull	CB-029SA	272
SCM-T	Round shaped cylinder/ double acting/heat resistance	CB-029SA	278
SCM-U	Round shaped cylinder/ double acting/low friction	CB-029SA	302
SCM-W	Round shaped cylinder/ double acting/two-stage	CB-029SA	322
SCM-W4	Round shaped cylinder/ double acting/tandem	CB-029SA	328
SCM-X	Round shaped cylinder/single acting/push	CB-029SA	254
SCM-Y	Round shaped cylinder/single acting/pull	CB-029SA	260
SCPD3	Pencil shaped cylinder/ Double acting/single rod	CB-029SA	8
SCPD3-*C	Pencil shaped cylinder/ Double acting/rubber-air cushioned	CB-029SA	28
SCPD3-D	Pencil shaped cylinder/ Double acting/double rod	CB-029SA	44
SCPD3-DT	Pencil shaped cylinder/ Double acting/double rod/heat resistance	CB-029SA	44
SCPD3-F	Pencil shaped cylinder/ Double acting/fine speed	CB-029SA	34
SCPD3-K	Pencil shaped cylinder/ Double acting/high load	CB-029SA	64
SCPD3-M	Pencil shaped cylinder/ Double acting/rotation-stop	CB-029SA	56
SCPD3-O	Pencil shaped cylinder/ Double acting/low speed	CB-029SA	40
SCPD3-T	Pencil shaped cylinder/ Double acting/heat resistance	CB-029SA	26
SCPD3-V	Pencil shaped cylinder/ With valve/double acting	CB-029SA	70
SCPD3-Z	Pencil shaped cylinder/ Double acting/with speed controller	CB-029SA	50
SCPH3	Pencil shaped cylinder/ Single acting/pull	CB-029SA	16
SCPS	Pencil shaped cylinder/ Single acting/push	CB-029SA	16
SCPS3	Pencil shaped cylinder/ Single acting/push	CB-029SA	16
SCPS3-M	Pencil shaped cylinder/ Single acting/push/rotation-stop	CB-029SA	56
SCPS3-V	Pencil shaped cylinder/ With valve/single acting	CB-029SA	70
SCS2	Large bore size cylinder (large bore size ø125 to 250)/double acting/single rod/lubricating	CB-029SA	626
SCS2-(N)	Large bore size cylinder (large bore size ø125 to 250)/double acting/single rod/non-lubricating	CB-029SA	626
SCS2-(N)D	Large bore size cylinder (large bore size ø125 to 250)/double acting/double rod/non-lubricating	CB-029SA	648
SCS2-B	Large bore size cylinder (large bore size ø125 to 250)/double acting/back to back	CB-029SA	654
SCS2-D	Large bore size cylinder (large bore size ø125 to 250)/double acting/double rod	CB-029SA	648
SCS2-G	Large bore size cylinder (large bore size ø125 to 250)/double acting/rubber scraper	CB-029SA	668
SCS2-H	Large bore size cylinder (large bore size ø125 to 250)/double acting/low hydraulic	CB-029SA	662
SCS2-P	Large bore size cylinder (large bore size ø125 to 250)/double acting/adjustable stroke	CB-029SA	640
SCS2-T	Large bore size cylinder (large bore size ø125 to 250)/double acting/heat resistance	CB-029SA	644
SCS2-W	Large bore size cylinder (large bore size ø125 to 250)/double acting/two-stage	CB-029SA	658
SD301, 302D	High polymer membrane dryer/single unit	CB-024SA	1818

SD301, 302E	High polymer membrane dryer/single unit	CB-024SA
SD3015 to 3075	High polymer membrane dryer/single unit	CB-024SA
SD401, 402D	High polymer membrane dryer/single unit	CB-024SA
SD401, 402E	High polymer membrane dryer/single unit	CB-024SA
SD4050 to 4100	High polymer membrane dryer/single unit	CB-024SA
SDM4050 to 4100	High polymer membrane dryer/ Super dryer modular series (large)	CB-024SA
SFC*	Anti-bacterial/bacteria-removing filter	CB-024SA
SFS10	Bacteria removing filter/inline	CB-024SA
SFR/SFRT	Fine speed fan rotary actuator	CB-029SA CB-030SA Ending Page 131
SHC	High power cylinder/double acting/double force	1144
SHC-K	High power cylinder/double acting/quad force	1154
SHD	Desiccant air dryer/ Medium/large heatless dryer	CB-024SA
SHV2	Shuttle valve	CB-024SA
SKAC	Contact protecting circuit box (for AC circuit)	CB-029SA CB-030SA Ending Page 27
SKDC	Contact protecting circuit box (for DC circuit)	CB-029SA CB-030SA Ending Page 27
SKH	Shock absorbing valve	CB-023SA
SKL	Shock absorber	1894
SL	Silencer/metal body	CB-024SA
SLM	Silencer/miniature	CB-024SA
SL-M5	Silencer/small bore size	CB-024SA
SL-W	Silencer/Outdoor Series	CB-024SA
SLW	Silencer/Small bore size/ resin body	CB-024SA
SLW-*A-H	Silencer/High noise reduction/ small bore size/resin body	CB-024SA
SLW-*L	Silencer/Large flow rate/ small bore size/resin body	CB-024SA
SLW-20S	Silencer/High noise reduction/ compact	CB-024SA
SLW-6S, 8S	Silencer/High noise reduction/ compact	CB-024SA
SLW-H*	Silencer/push-in	CB-024SA
SM-25	Shuttle mover Standard/high load	CB-029SA 1784
SMG	Compact cylinder/double acting/single rod	CB-029SA 1386
SMG-F	Compact cylinder/double acting/fine speed	CB-029SA 1400
SMG-M	Compact cylinder/double acting/rotation-stop	CB-029SA 1404
SMG-X	Compact cylinder/single acting/push	CB-029SA 1392
SMG-Y	Compact cylinder/single acting/pull	CB-029SA 1392
SMW	Metering valve with silencer	CB-024SA
SMW2	Metering valve with silencer	CB-024SA
SNP	3-port solenoid valve with spool position detection	CB-024SA
SNS	Residual pressure exhaust valve with spool position detection	CB-024SA
SPK	Pilot kick 2-port solenoid valve for steam	CB-03-1SA
SR	Flame-resistant tube	CB-024SA
SRG3	High precision guided rodless cylinder (single guide)/double acting	CB-029SA 1650
SRL3	Rodless cylinder/double acting	CB-029SA 1574
SRL3-G	Rodless cylinder/double acting/with resin guide	CB-029SA 1590
SRL3-GQ	Rodless cylinder/double acting/with resin guide/with position locking function	CB-029SA 1614
SRL3-Q	Rodless cylinder/double acting/ with position locking function	CB-029SA 1604
SRM3	High precision guided rodless cylinder (double guide)/double acting	CB-029SA 1676
SRM3-Q	High precision guided rodless cylinder (double guide)/double acting/position locking	CB-029SA 1676
SRT3	Rodless cylinder with brake/ double acting	CB-029SA 1706
SSD	Compact cylinder/double acting/single rod	CB-029SA 1094
SSD2	Compact cylinder/double acting/single rod	CB-029SA 752
SSD2-B	Compact cylinder/double acting/back to back	CB-029SA 890

■ Listed catalog No.

CB-029SA ... Pneumatic Cylinders I
CB-030SA ... Pneumatic Cylinders II
CB-023SA ... Pneumatic Valves
CB-024SA ... Pneumatic, Vacuum and Auxiliary Components
CB-03-1SA ... General Purpose Valves

■ Codes (pneumatic valves and general purpose valves)

Ⓓ... Discrete valves
Ⓘ... Individual wiring manifolds
Ⓑ... Block manifolds
Ⓡ... Reduced wiring manifolds
Ⓧ... Mix manifolds
Ⓜ... Manifolds

Model No. [index in alphabetical order]

Model No.	Model	Catalog No./page
S		
SSD2-D	Compact cylinder/double acting/double rod	CB-029SA 868
SSD2-DG1	Compact cylinder/double acting/double rod/coil scraper	CB-029SA 984
SSD2-DG4	Compact cylinder/double acting/double rod/anti-spatter adherence	CB-029SA 984
SSD2-DM	Compact cylinder/double acting/double rod/rotation-stop	CB-029SA 924
SSD2-F	Compact cylinder/double acting/fine speed	CB-029SA 854
SSD2-G	Compact cylinder/double acting/rubber scraper	CB-029SA 936
SSD2-G1	Compact cylinder/double acting/coil scraper	CB-029SA 966
SSD2-G1L4	Compact cylinder/double acting/with strong magnetic field proof switch/with coil scraper	CB-029SA 1018
SSD2-G2/G3	Compact cylinder/double acting/coolant proof	CB-029SA 946
SSD2-G4	Compact cylinder/double acting/anti-spatter adherence	CB-029SA 966
SSD2-G5	Compact cylinder/double acting/environment-resistant scraper	CB-029SA 992
SSD2-K	Compact cylinder/double acting/single rod/high load	CB-029SA 776
SSD2-K-*C	Compact cylinder/double acting/high load/rubber-air cushioned	CB-029SA 832
SSD2-KF	Compact cylinder/double acting/fine speed	CB-029SA 854
SSD2-KG1	Compact cylinder/double acting/high load/coil scraper	CB-029SA 974
SSD2-KG1L4	Compact cylinder/double acting/high load/with strong magnetic field proof switch/with coil scraper	CB-029SA 1030
SSD2-KG2/KG3	Compact cylinder/double acting/high load/coolant proof	CB-029SA 956
SSD2-KG4	Compact cylinder/double acting/high load/anti-spatter adherence	CB-029SA 974
SSD2-KG5	Compact cylinder/double acting/high load/environment-resistant scraper	CB-029SA 1002
SSD2-KL4	Compact cylinder/double acting/high load/with strong magnetic field proof switch	CB-029SA 1024
SSD2-KU	Compact cylinder/double acting/high load/low friction	CB-029SA 864
SSD2-L	Compact cylinder/double acting/single rod/long stroke	CB-029SA 792
SSD2-L4	Compact cylinder/double acting/with strong magnetic field proof switch	CB-029SA 1012
SSD2-M	Compact cylinder/double acting/rotation-stop	CB-029SA 910
SSD2-O	Compact cylinder/double acting/low speed	CB-029SA 858
SSD2-P7*	Compact cylinder/double acting/clean-room specifications	CB-029SA 1036
SSD2-Q	Compact cylinder/double acting/with position locking	CB-029SA 840
SSD2-T1	Compact cylinder/double acting/heat resistance	CB-029SA 820
SSD2-T1L	Compact cylinder/double acting/with heat resistant cylinder switch	CB-029SA 824
SSD2-W	Compact cylinder/double acting/two-stage	CB-029SA 902
SSD2-X	Compact cylinder/single acting/push	CB-029SA 802
SSD2-Y	Compact cylinder/single acting/pull	CB-029SA 802
SSD-B	Compact cylinder/double acting/back to back	CB-029SA 1200
SSD-D	Compact cylinder/double acting/double rod	CB-029SA 1188
SSD-DG1	Compact cylinder/double acting/double rod/coil scraper	CB-029SA 1264
SSD-DG4	Compact cylinder/double acting/double rod/anti-spatter adherence	CB-029SA 1264
SSD-F	Compact cylinder/double acting/fine speed	CB-029SA 1172
SSD-G1	Compact cylinder/double acting/coil scraper	CB-029SA 1246
SSD-G1L4	Compact cylinder/double acting/with strong magnetic field proof for switch/with coil scraper	CB-029SA 1294
SSD-G2/G3	Compact cylinder/double acting/coolant proof	CB-029SA 1230
SSD-G4	Compact cylinder/double acting/anti-spatter adherence	CB-029SA 1246
SSD-G5	Compact cylinder/double acting/single rod/environment-resistant scraper	CB-029SA 1272
SSD-K	Compact cylinder/double acting/single rod/high load	CB-029SA 1116
SSD-K-*C	Compact cylinder/double acting/high load/rubber-air cushioned	CB-029SA 1150
SSD-KF	Compact cylinder/double acting/high load/fine speed	CB-029SA 1172

SSD-KG1	Compact cylinder/double acting/high load/coil scraper	CB-029SA 1254
SSD-KG1L4	Compact cylinder/double acting/high load/with strong magnetic field proof switch/with coil scraper	CB-029SA 1306
SSD-KG2/KG3	Compact cylinder/double acting/high load/coolant proof	CB-029SA 1238
SSD-KG4	Compact cylinder/double acting/ high load/anti-spatter adherence	CB-029SA 1254
SSD-KG5	Compact cylinder/double acting/high load/environment-resistant scraper	CB-029SA 1280
SSD-KL4	Compact cylinder/double acting/high load/ with strong magnetic field proof switch	CB-029SA 1300
SSD-K-P12	Compact cylinder/oil-prohibited	CB-029SA CB-030SA Ending Page 132
SSD-KU	Compact cylinder/double acting/low friction	CB-029SA 1184
SSD-L4	Compact cylinder/double acting/with strong magnetic field proof switch	CB-029SA 1288
SSD-LN	With length measuring sensor	1474
SSD-M	Compact cylinder/double acting/rotation-stop	CB-029SA 1220
SSD-O	Compact cylinder/double acting/low speed	CB-029SA 1178
SSD-Q	Compact cylinder/double acting/position locking	CB-029SA 1160
SSD-T	Compact cylinder/double acting/heat resistance	CB-029SA 1138
SSD-T1L	Compact cylinder/double acting/ with heat resistant cylinder switch	CB-029SA 1142
SSD-W	Compact cylinder/double acting/two-stage	CB-029SA 1210
SSD-X	Compact cylinder/single acting/push	CB-029SA 1126
SSD-Y	Compact cylinder/single acting/pull	CB-029SA 1126
SSG	Guided super compact cylinder/ double acting/single rod	CB-029SA 1068
STA2	Stopper cylinder	CB-029SA CB-030SA Ending Page 130
STG	Guided cylinder/ Double acting/single rod	336
STG-*-*C	Guided cylinder/ Double acting/rubber-air cushioned	350
STG-*C	Guided cylinder/ Double acting/air cushioned	358
STG-*G	Guided cylinder/ Double acting/rubber scraper	376
STG-*G1	Guided cylinder/ Double acting/coil scraper	376
STG-*G2/G3	Guided cylinder/ Double acting/coolant proof	382
STG-*G4	Guided cylinder/ Double acting/anti-spatter adherence	388
STG-*Q	Guided cylinder/ Double acting/position locking	368
STG-B-P7*	Guided cylinder/ Double acting/clean-room specifications	404
STG-K	Guided cylinder/ Double acting/heavy duty guide rod	430
STG-MG5	Guided cylinder/ Double acting/environment-resistant scraper	394
STK	Stopper cylinder/ Double acting/round rod end form	CB-029SA 1512
STK-JY	Stopper cylinder/ Single acting/pull/rod end form roller	CB-029SA 1548
STK-JY1	Stopper cylinder/ Double acting/spring integrated/rod end form roller	CB-029SA 1554
STK-M	Stopper cylinder/ Double acting/rod end form chamfered	CB-029SA 1530
STK-MY	Stopper cylinder/ Single acting/pull/rod end form chamfered	CB-029SA 1536
STK-MY1	Stopper cylinder/ Double acting/spring integrated/rod end form chamfered	CB-029SA 1542
STK-Y	Stopper cylinder/ Single acting/pull/round rod end form	CB-029SA 1518
STK-Y1	Stopper cylinder/ Double acting/spring integrated/round rod end form	CB-029SA 1524
STL-*	Guided cylinder (long stroke)/ double acting/single rod	448
STL-*-*C	Guided cylinder (long stroke)/ double acting/rubber-air cushioned	486

■ Listed catalog No.

CB-029SA ... Pneumatic Cylinders Ⅰ
CB-030SA ... Pneumatic Cylinders Ⅱ
CB-023SA ... Pneumatic Valves
CB-024SA ... Pneumatic, Vacuum and Auxiliary Components
CB-03-1SA ... General Purpose Valves

■ Codes (pneumatic valves and general purpose valves)

Ⓓ... Discrete valves
Ⓘ... Individual wiring manifolds
Ⓑ... Block manifolds
Ⓡ... Reduced wiring manifolds
Ⓧ... Mix manifolds
Ⓜ... Manifolds

Model No. [index in alphabetical order]

Model No.	Model	Catalog No./page
S		
STL-*C	Guided cylinder (long stroke)/ double acting/air cushioned	486
STL-*F	Guided cylinder (long stroke)/ double acting/fine speed	512
STL-*G/G1	Guided cylinder (long stroke)/ double acting/scraper	518
STL-*G2/G3	Guided cylinder (long stroke)/ double acting/coolant proof	526
STL-*G4	Guided cylinder (long stroke)/double acting/anti-spatter adherence	536
STL-*O	Guided cylinder (long stroke)/ double acting/low speed	514
STL-*P	Guided cylinder (long stroke)/double acting/stroke adjustable/push	470
STL-*Q	Guided cylinder (long stroke)/ double acting/position locking	500
STL-*T	Guided cylinder (long stroke)/ double acting/heat resistance	476
STL-*T2	Guided cylinder (long stroke)/double acting/packing material fluoro rubber	480
STL-*V	Guided cylinder (long stroke)/ with valve/double acting	544
STM-B-P7*	Guided cylinder/ Double acting/single rod/clean-room specifications	320
STM-M/B	Guided cylinder/ Double acting/single rod	314
STR2-*	Twin rod cylinder/double acting/single rod	580
STR2-*D	Twin rod cylinder/double acting/double rod	612
STR2-*F	Twin rod cylinder/double acting/fine speed	610
STR2-*O	Twin rod cylinder/double acting/low speed	602
STR2-*Q	Twin rod cylinder/double acting/position locking	592
STS-*	Guided cylinder (short stroke)/ double acting/single rod	448
STS-*-*C	Guided cylinder (short stroke)/ double acting/rubber-air cushioned	486
STS-*C	Guided cylinder (short stroke)/ double acting/air cushioned	492
STS-*F	Guided cylinder (short stroke)/ double acting/fine speed	512
STS-*G/G1	Guided cylinder (short stroke)/double acting/scraper	518
STS-*G2/G3	Guided cylinder (short stroke)/ double acting/coolant proof	526
STS-*G4	Guided cylinder (short stroke)/ double acting/anti-spatter adherence	536
STS-*O	Guided cylinder (short stroke)/ double acting/low speed	514
STS-*P	Guided cylinder (short stroke)/ double acting/stroke adjustable/push	470
STS-*Q	Guided cylinder (short stroke)/ double acting/position locking	500
STS-*T	Guided cylinder (short stroke)/ double acting/heat resistance	476
STS-*T2	Guided cylinder (short stroke)/double acting/packing material fluoro rubber	480
STS-*V	Guided cylinder (short stroke)/ with valve/double acting	544
SU301, 302D	High polymer membrane dryer/unit	CB-024SA
SU301, 302E	High polymer membrane dryer/unit	CB-024SA
SU3015 to 3075	High polymer membrane dryer/unit	CB-024SA
SU401, 402D	High polymer membrane dryer/unit	CB-024SA
SU401, 402E	High polymer membrane dryer/unit	CB-024SA
SU4050, 4100	High polymer membrane dryer/unit	CB-024SA
SVB*A	Air operated 2-port valve with solenoid valve for air/gas (cylinder valve)	CB-03-1SA
SVB*S	Air operated 2-port valve with solenoid valve for steam/water/air (cylinder valve)	CB-03-1SA
SVB*V	Air operated 2-port valve with solenoid valve for low vacuum (cylinder valve)	CB-03-1SA
SVB*W	Air operated 2-port valve with solenoid valve for water/liquid (cylinder valve)	CB-03-1SA
SWD	Weir diaphragm valve	CB-03-1SA
T		
T0V/H/C	Cylinder switch/ 1-color LED/2-wire reed	CB-029SA CB-030SA Ending Page 16
T1 V/H	Cylinder switch/ 1-color LED, proximity 2-wire	CB-029SA CB-030SA Ending Page 16
T2 V/H R	Cylinder switch/ Bend resistance lead wire/2-wire proximity sensor	CB-029SA CB-030SA Ending Page 16
T2, 3 V/H/C	Cylinder switch/ 1-color LED, 2, 3-wire proximity	CB-029SA CB-030SA Ending Page 16

T2, 3Y (W) V/H	Cylinder switch/ 2-color LED, 2, 3-wire proximity	CB-029SA CB-030SA	Ending Page 16
T2, 3YL V/H	Cylinder switch/ Coolant proof/2, 3-wire proximity sensor	CB-029SA CB-030SA	Ending Page 17
T2J V/H	Cylinder switch/ Off-delay/2-wire proximity sensor	CB-029SA CB-030SA	Ending Page 16
T2YD (T)	Cylinder switch/ Strong magnetic field proof/proximity 2-wire	CB-029SA CB-030SA	Ending Page 17
T3P V/H	Cylinder switch/ PNP output/3-wire proximity sensor	CB-029SA CB-030SA	Ending Page 16
T5V/H/C	Cylinder switch/ Without display/reed 2-wire	CB-029SA CB-030SA	Ending Page 16
T8 V/H	Cylinder switch/ 1-color LED/2-wire reed	CB-029SA CB-030SA	Ending Page 16
TAC-25	Medium pressure gas shut off control system	CB-03-1SA	
TLPS	Cutting tool breakage detection switch/single unit	CB-024SA	

U

U	Urethane tube	CB-024SA	
UCA2	Unit cylinder/ Double acting/single rod/metal bush bearing		640
UCA2-B	Unit cylinder/ Double acting/single rod/ball bearing		650
UCAC2	Position locking clamp cylinder/ double acting/single rod		1030
UCAC-N32/40	Lightweight clamp cylinder/ Position locking/double acting/single rod		1052
UFCD	Free position locking flat cylinder/ double acting/single rod		888
UGPS2	Contact confirmation switch/unit	CB-024SA	
UGPS3	Digital gap switch/unit	CB-024SA	
UHPS	Close contact confirmation switch/unit	CB-024SA	
ULK	Brake cylinder/ Double acting/single rod		680
ULKP	Brake cylinder/ Double acting/single rod (ø16)		674
ULK-V	Brake cylinder/ With valve/double acting		680
UMB1	High corrosion-resistant miniature direct acting 2-port solenoid valve for medical equipment	CB-03-1SA	
UMG1	High corrosion-resistant miniature direct acting 3-port solenoid valve for medical equipment	CB-03-1SA	
UP	Antistatic fiber tube (for push-in fitting)	CB-024SA	
UP-**-F1/F2	Antistatic tube	CB-024SA	
UP-9102-20-*-F1	Antistatic fiber tube	CB-024SA	
UP-9102-SR	Flame-resistant fiber tube (For push-in fitting)	CB-024SA	
US	Compact direct acting 2, 3-port solenoid valve (resin body)	CB-03-1SA	
USB2	Compact direct acting 2-port solenoid valve	CB-03-1SA	
USB3	Compact direct acting 2-port solenoid valve	CB-03-1SA	
USC	Free position locking medium bore size cylinder/double acting/single rod		904
USC-G1	Free position locking medium bore size cylinder/double acting/with coil scraper		904
USG2	Compact direct acting 3-port solenoid valve	CB-03-1SA	
USG3	Compact direct acting 3-port solenoid valve	CB-03-1SA	
USSD	Position locking compact cylinder/double acting/single rod		846
USSD-K	Position locking compact cylinder/ double acting/single rod/high load		846
UTLPS	Cutting tool breakage detection switch/unit	CB-024SA	

V

V0	Cylinder switch/ Compact strong magnetic field proof/reed 2-wire	CB-029SA CB-030SA	Ending Page 25
V1000, 3000-W	Residual pressure exhaust valve Standard White Series	CB-024SA	
V3010, 6010-W	Residual pressure exhaust valve with keyhole With keyhole, OSHA compliant	CB-024SA	
V3301, 3321-W	Slow start valve	CB-024SA	
VFA1000 to 4000	Vacuum filter	CB-024SA	
VG41D	Vacuum pressure gauge with limit marker	CB-024SA	
VLA	Solenoid valve for gas combustion system	CB-03-1SA	
VLM	Medium pressure gas safety cutoff control system	CB-03-1SA	
VNA	Solenoid valve for gas combustion system	CB-03-1SA	
VNA-R/RH	Solenoid valve for gas combustion system	CB-03-1SA	

■ Listed catalog No.

CB-029SA ... Pneumatic Cylinders I
CB-030SA ... Pneumatic Cylinders II
CB-023SA ... Pneumatic Valves
CB-024SA ... Pneumatic, Vacuum and Auxiliary Components
CB-03-1SA ... General Purpose Valves

■ Codes (pneumatic valves and general purpose valves)

Ⓓ... Discrete valves
Ⓘ... Individual wiring manifolds
Ⓑ... Block manifolds
Ⓡ... Reduced wiring manifolds
Ⓧ... Mix manifolds
Ⓜ... Manifolds

Model No. [index in alphabetical order]

Model No.	Model	Catalog No./page
V		
VNM	Medium pressure gas safety cutoff control system	CB-03-1SA
VNM-25-K	Safety residual pressure exhaust valve (increased fire safety specifications)	CB-03-1SA
VNR	Solenoid valve for gas combustion system NO (closed when energized)	CB-03-1SA
VRA2000	Vacuum regulator	CB-024SA
W		
W1000 to 8000-P6	Filter/regulator/ Copper and PTFE free Series	CB-024SA
W1000 to 8000-W	Filter/regulator/ Standard White Series	CB-024SA
W1100 to 8100-P6	Reverse filter/regulator/ Copper and PTFE free Series	CB-024SA
W1100 to 8100-W	Reverse filter/regulator/ Standard White Series	CB-024SA
W2P513*	Ⓓ Pilot operated 5-port valve/ double	CB-023SA
W3000 to 8000-G4	Filter/regulator/ Flame-resistant Series	CB-024SA
W3100 to 8100-G4	Reverse filter/regulator/ Flame-resistant Series	CB-024SA
W4GB2	Ⓓ Pilot operated 3, 5-port valve/base piping	CB-023SA
W4GB4	Ⓓ Pilot operated 5-port valve/ base side piping	CB-023SA
W4GZ4	Ⓓ Pilot operated 5-port valve/ base bottom piping	CB-023SA
WB500	Compact filter/regulator	CB-024SA
WFC	Capacitance electromagnetic flow sensor	CB-024SA
WFK2	Karman vortex flow rate sensor for water	CB-024SA
WFK3000	Karman vortex flow rate sensor for water, compact/device built-in	CB-024SA
WR1/2	Regulator for water	CB-024SA
WW4000, 8000	Filter/regulator Outdoor Series	CB-024SA
WXU	Integrated unit for water control	CB-03-1SA
Y		
YS	Y shaped strainer	CB-03-1SA
Z		
ZB4-B	Switch head	CB-024SA
ZCK	Rotary head lever actuator	CB-024SA
ZJ-L*	Tightening fitting (stainless steel)/ elbow	CB-024SA
ZJ-N*	Tightening fitting (stainless steel)/ sleeve integrated with nut	CB-024SA
ZJ-S*	Tightening fitting (stainless steel)/ straight	CB-024SA
ZJ-T*	Tightening fitting (stainless steel)/ tee	CB-024SA
ZSP	Fitting (stainless steel)	CB-024SA
ZW-L*	Fitting (stainless steel)/elbow	CB-024SA
ZW-S*	Fitting (stainless steel)/ straight	CB-024SA
ZW-T*	Fitting (stainless steel)/ tee	CB-024SA

■ Listed catalog No.

CB-029SA ... Pneumatic Cylinders I
CB-030SA ... Pneumatic Cylinders II
CB-023SA ... Pneumatic Valves
CB-024SA ... Pneumatic, Vacuum and Auxiliary Components
CB-03-1SA ... General Purpose Valves

■ Codes (pneumatic valves and general purpose valves)

Ⓓ... Discrete valves
Ⓘ... Individual wiring manifolds
Ⓑ... Block manifolds
Ⓡ... Reduced wiring manifolds
Ⓧ... Mix manifolds
Ⓜ... Manifolds

Pneumatic Cylinders II

Catalog No. CB-030SA 9

Date of issue October 14, 1996 1st edition
January 31, 2016 9th edition
July 31, 2020 9th edition Ver.2
July 21, 2021 9th edition Ver.2 2-print

Place of issue **CKD Corporation**
2-250 Ouji, Komaki City, Aichi 485-8551, Japan
https://www.ckd.co.jp/en/

Fixed price 1,300 yen (tax not included)

© **CKD Corporation** 2022 Printed in Japan
Unauthorized copying prohibited
The specifications and appearances listed in this catalog may change without prior notice in order for improvements to be made.

VEGETABLE OIL INK This catalog has been printed with environmentally friendly “vegetable oil ink”.

CKD WARRANTY

Subject to the conditions below, CKD Corporation ("CKD") warrants the first end user (the "Buyer") that CKD's products are free from defects in material and workmanship.

"Warranty Period" is one (1) year from the first delivery to the customer.

CKD will, at CKD's option, either repair or replace a defective product, including lowest transportation costs but not including installation or any other similar charges, provided that (1) the buyer notifies CKD in writing of the claimed defect within one year from the date Buyer received the product, (2) provides a complete explanation of the defect, the application of the product, and such other information concerning use of the product as CKD may request, and (3) returns the product to CKD in accordance with CKD's specific written instructions and authorization obtained from CKD prior to return of the product, and CKD's inspection confirms that the product was defective.

This warranty applies only if the product was used and applied correctly under normal operating conditions and good engineering practice; was installed, operated and maintained in accordance with all instructions issued or published by CKD; was used within stated pressure, media and operating limitations published by CKD and in effect on the date of shipment; and was not subject to abuse, misuse or unauthorized modification.

THIS WARRANTY IS THE ONLY AUTHORIZED CKD WARRANTY AND IN LIEU OF ALL OTHER WARRANTIES, EXPRESSED OR IMPLIED, INCLUDING ANY IMPILIED WARRANTY OF MERCHANTABILITY OR FITNESS FOR A PARTICULAR PURPOSE, notwithstanding any disclosure to CKD of the use to which the product is to be put. The Buyer's **SOLE AND EXCLUSIVE REMEDY** on any claim of any kind for any loss or damage arising out of the manufacture, sale, delivery or use of CKD's products shall be for the repair or replacement of any defective products as provided herein.

IN NO EVENT SHALL CKD BE LIABLE FOR BUSINESS INTERRUPTIONS, LOSS OF PROFITS, PERSONAL INJURY, COSTS OF DELAY OR FOR ANY OTHER SPECIAL, INDIRECT, INCIDENTAL OR CONSEQUENTIAL LOSSES, COSTS OR DAMAGES. There are no warranties, expressed or implied, made by CKD other than the warranty against defects in material and workmanship set forth above, and CKD neither assumes nor authorizes any other person or firm to assume for it any other obligations or liability.

CKD shall not be liable for any trouble, malfunction and damages of CKD products caused, directly or indirectly, by disaster or any other causes not attributable to CKD’s responsibility. CKD also shall not be responsible for any trouble, malfunction and damages of CKD Products caused by the lack or malfunction of safety circuit or structure or function that should be commonly equipped in the Buyer's equipment in which the CKD products were used.

CKD MAINTAINS A POLICY OF ONGOING PRODUCT DEVELOPMENT AND INPROVEMENT. WE THEREFORE RESERVE THE RIGHT TO CHANGE DIMENSIONS, SPECIFICATIONS AND DESIGN WITHOUT NOTICE.

WORLD-NETWORK

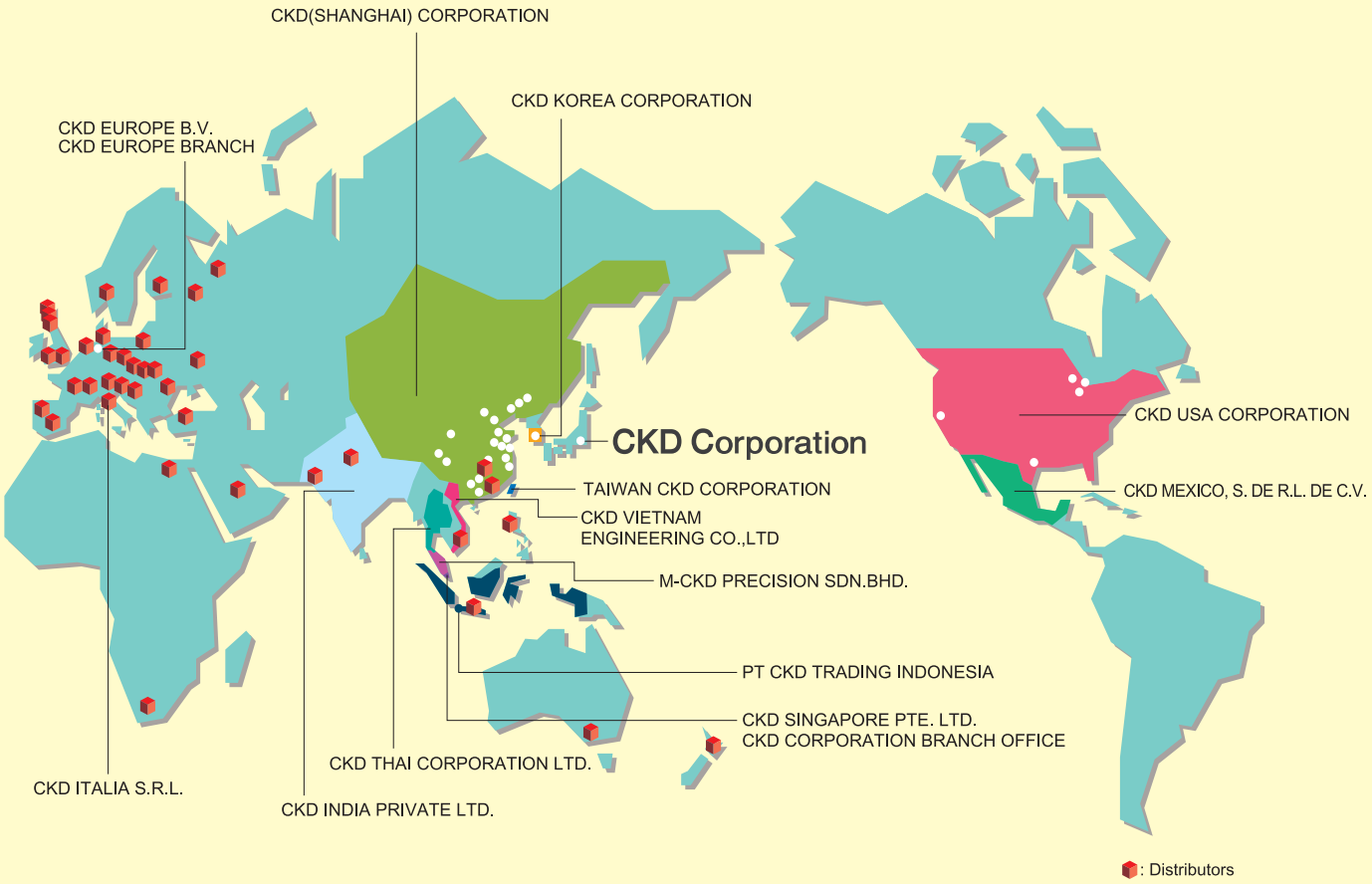

CKD Corporation

Website https://www.ckd.co.jp/en/

□ 2-250 Ouji, Komaki City, Aichi 485-8551, Japan
□ PHONE +81-568-74-1338 FAX +81-568-74-1165

ASIA

喜開理(上海)機器有限公司 CKD(SHANGHAI)CORPORATION

- 営業部/上海浦西事務所(SALES HEADQUARTERS / SHANGHAI PUXI OFFICE)
  Room 612, 6th Floor, Yuanzhongkeyan Building, No. 1905 Hongmei Road, Xuhui District, Shanghai 200233, China
  PHONE +86-21-60906046 FAX +86-21-60906046
- 上海浦東事務所(SHANGHAI PUDONG OFFICE)
- 寧波事務所(NINGBO OFFICE)
- 杭州事務所(HANGZHOU OFFICE)
- 無錫事務所(WUXI OFFICE)
- 昆山事務所(KUNSHAN OFFICE)
- 蘇州事務所(SUZHOU OFFICE)
- 南京事務所(NANJING OFFICE)
- 合肥事務所(HEFEI OFFICE)
- 成都事務所(CHENGDU OFFICE)
- 武漢事務所(WUHAN OFFICE)
- 鄭州事務所(ZHENGZHOU OFFICE)
- 長沙事務所(CHANGSHA OFFICE)
- 重慶事務所(CHONGQING OFFICE)
- 西安事務所(XIAN OFFICE)
- 広州事務所(GUANGZHOU OFFICE)
- 中山事務所(ZHONGSHAN OFFICE)
- 深圳西事務所(WEST SHENZHEN OFFICE)
- 深圳東事務所(EAST SHENZHEN OFFICE)
- 東莞事務所(DONGGUAN OFFICE)
- 厦門事務所(XIAMEN OFFICE)
- 福州事務所(FUZHOU OFFICE)
- 瀋陽事務所(SHENYANG OFFICE)
- 大連事務所(DALIAN OFFICE)
- 長春事務所(CHANGCHUN OFFICE)
- 北京事務所(BEIJING OFFICE)
- 天津事務所(TIANJIN OFFICE)
- 青島事務所(QINGDAO OFFICE)
- 潍坊事務所(WEIFANG OFFICE)
- 済南事務所(JINAN OFFICE)
- 烟台事務所(YANTAI OFFICE)

CKD INDIA PRIVATE LTD.

- HEADQUARTERS
  Unit No. 607, 6th Floor, Welldone Tech Park, Sector 48, Sohna Road, Gurgaon-122018, Haryana, India
  PHONE +91-124-418-8212
- BANGALORE OFFICE
- PUNE OFFICE
- CHENNAI OFFICE
- MUMBAI OFFICE
- HYDERABAD OFFICE

PT CKD TRADING INDONESIA

- HEAD OFFICE
  Menara Bidakara 2, 18th Floor, Jl. Jend. Gatot Subroto Kav. 71-73, Pancoran, Jakarta 12870, Indonesia
  PHONE +62-21-2938-6601 FAX +62-21-2906-9470
- MEDAN OFFICE
- BEKASI OFFICE
- KARAWANG OFFICE
- SEMARANG OFFICE
- SURABAYA OFFICE

CKD KOREA CORPORATION

- HEADQUARTERS
  (3rd Floor), 44, Sinsu-ro, Mapo-gu, Seoul 04088, Korea
  PHONE +82-2-783-5201~5203 FAX +82-2-783-5204
- 水原営業所(SUWON OFFICE)
- 天安営業所(CHEONAN OFFICE)
- 蔚山営業所(ULSAN OFFICE)

M-CKD PRECISION SDN.BHD.

- HEAD OFFICE
  Lot No.6,Jalan Modal 23/2, Seksyen 23, Kawasan MIEL, Fasa 8, 40300 Shah Alam,Selangor Darul Ehsan, Malaysia
  PHONE +60-3-5541-1468 FAX +60-3-5541-1533
- JOHOR BAHRU BRANCH OFFICE
- PENANG BRANCH OFFICE

CKD SINGAPORE PTE. LTD.

No.33 Tannery Lane #04-01 Hoesteel Industrial Building, Singapore 347789, Singapore
PHONE +65-67442623 FAX +65-67442486

CKD CORPORATION BRANCH OFFICE

No.33 Tannery Lane #04-01 Hoesteel Industrial Building, Singapore 347789, Singapore
PHONE +65-67447260 FAX +65-68421022

CKD THAI CORPORATION LTD.

- HEADQUARTERS
  19th Floor, Smooth Life Tower, 44 North Sathorn Road, Silom, Bangrak, Bangkok 10500, Thailand
  PHONE +66-2-267-6300 FAX +66-2-267-6304-5
- NAVANAKORN OFFICE
- EASTERN SEABOARD OFFICE
- LAMPHUN OFFICE
- KORAT OFFICE
- AMATANAKORN OFFICE
- PRACHINBURI OFFICE
- SARABURI OFFICE

台湾喜開理股份有限公司 TAIWAN CKD CORPORATION

- HEADQUARTERS
  16F-3, No. 7, Sec. 3, New Taipei Blvd., Xinzhuang Dist., New Taipei City 242, Taiwan
  PHONE +886-2-8522-8198 FAX +886-2-8522-8128
- 新竹営業所(HSINCHU OFFICE)
- 台中営業所(TAICHUNG OFFICE)
- 台南営業所(TAINAN OFFICE)
- 高雄営業所(KAOHSIUNG OFFICE)

CKD VIETNAM ENGINEERING CO.,LTD.

- HEADQUARTERS
  18th Floor, CMC Tower, Duy Tan Street, Cau Giay District, Hanoi, Vietnam
  PHONE +84-24-3795-7631 FAX +84-24-3795-7637
- HO CHI MINH OFFICE

EUROPE

CKD EUROPE B.V.

- HEADQUARTERS
  Beechavenue 125A, 1119 RB Schiphol-Rijk, the Netherlands
  PHONE +31-23-554-1490
- CKD EUROPE GERMANY OFFICE
- CKD EUROPE UK
- CKD EUROPE CZECH O.Z.

CKD CORPORATION EUROPE BRANCH

Beechavenue 125A, 1119 RB Schiphol-Rijk, the Netherlands
PHONE +31-23-554-1490

CKD ITALIA S.R.L.

Via di Fibbiana 15 Calenzano (FI) CAP 50041, Italy
PHONE +39 0558825359 FAX +39 0558827376

NORTH AMERICA & LATIN AMERICA

CKD MEXICO, S. DE R.L. DE C.V.

Cerrada la Noria No. 200 Int. A-01, Querétaro Park II, Parque Industrial Querétaro, Santa Rosa Jáuregui, Querétaro, C.P. 76220, México
PHONE +52-442-161-0624

CKD USA CORPORATION

- HEADQUARTERS
  1605 Penny Lane, Schaumburg, IL 60173, USA
  PHONE +1-847-648-4400 FAX +1-847-565-4923
- LEXINGTON OFFICE
- SAN ANTONIO OFFICE
- SAN JOSE OFFICE/ TECHNICAL CENTER
- DETROIT OFFICE
- BOSTON OFFICE

CKD Corporation

https://www.ckd.co.jp/en/

2-250 Ouji, Komaki City,
Aichi 485-8551, Japan